Navigation Tools: Click on the "Table of Contents" below, or use the Bookmarks to the left.

INTRODUCTION

How to Use This Manual

This manual is divided into multiple sections. The first page of each section is marked with a black tab that lines up with its corresponding thumb index tab on this page and the back cover. You can quickly find the first page of each section without looking through a full table of contents. The symbols printed at the top corner of each page can also be used as a quick reference system.

Each section includes:

1. A table of contents, or an exploded view index showing:
   - Parts disassembly sequence.
   - Bolt torques and thread sizes.
   - Page references to descriptions in text.
2. Disassembly/assembly procedures and tools.
3. Inspection.
4. Testing/troubleshooting.
5. Repair.
6. Adjustments.

Safety Messages

Your safety, and the safety of others, is very important. To help you make informed decisions, we have provided safety messages, and other safety information throughout this manual. Of course, it is not practical or possible to warn you about all the hazards associated with servicing this vehicle. You must use your own good judgment.

You will find important safety information in a variety of forms including:

- **Safety Labels** — on the vehicle.
- **Safety Messages** — preceded by a safety alert symbol ⚠ and one of three signal words, DANGER, WARNING, or CAUTION. These signal words mean:

⚠ DANGER	You WILL be KILLED or SERIOUSLY HURT if you don't follow instructions.
⚠ WARNING	You CAN be KILLED or SERIOUSLY HURT if you don't follow instructions.
⚠ CAUTION	You CAN be HURT if you don't follow instructions.

- **Instructions** — how to service this vehicle correctly and safely.

All information contained in this manual is based on the latest product information available at the time of printing. We reserve the right to make changes at anytime without notice. No part of this publication may be reproduced, or stored in a retrieval system, or transmitted, in any form by any means, electronic, mechanical, photocopying, recording, or otherwise, without the prior written permission of the publisher. This includes text, figures, and tables.

As you read this manual, you will find information that is preceded by a NOTICE symbol. The purpose of this message is to help prevent damage to your vehicle, other property, or the environment.

First Edition 12/2008
All Rights Reserved
Specifications apply to USA and Canada

HONDA MOTOR CO., LTD.
Service Publication Office

As sections with * include SRS components; special precautions are required when servicing.

NOTE: marked sections are not included in this manual, see Volume 2.

General Information
Specifications
Maintenance
*Engine Electrical
*Engine Mechanical
Engine Cooling
Fuel and Emissions
IMA
*Transaxle
*Steering
Suspension (Including TPMS)
Brakes (Including VSA)
*Body
*Heating, Ventilation, and Air Conditioning
*Body Electrical
*Audio, Navigation, and Telematics
*Restraints

2006-09 Civic Hybrid

Vol. 1 of 2

SUPPLEMENTAL RESTRAINT SYSTEM (SRS)

The Civic Hybrid SRS includes a driver's airbag in the steering wheel hub, a passenger's airbag in the dashboard above the glove box, seat belt tensioners in the front seat belt retractors, seat belt buckle tensioners in the front seat belt buckles, side curtain airbags in the sides of the roof, and side airbags in the front seat-backs. Information necessary to safely service the SRS is included in this Service Manual. Items marked with an asterisk (*) on the contents page include or are located near SRS components. Servicing, disassembling, or replacing these items requires special precautions and tools, and should be done by an authorized Honda dealer.

- To avoid rendering the SRS inoperative, which could lead to personal injury or death in the event of a severe frontal or side collision, all SRS service work should be done by an authorized Honda dealer.
- Improper service procedures, including incorrect removal and installation of the SRS, could lead to personal injury caused by unintentional deployment of the airbags, side airbags, and/or side curtain airbags.
- Do not bump or impact the SRS unit, front impact sensors, side impact sensors, or rear safing sensor when the ignition switch is in ON (II), or for at least 3 minutes after the ignition switch is turned to LOCK (0); otherwise, the system may fail in a collision, or the airbags may deploy.
- SRS electrical connectors are identified by yellow color coding. Related components are located in the steering column, front console, dashboard, dashboard lower panel, in the dashboard above the glove box, in the front seats, in the roof side, and around the floor. Do not use electrical test equipment on these circuits.

INTEGRATED MOTOR ASSIST (IMA) SYSTEM

IMA components are located in this area. The IMA is a high-voltage system. The high voltage cables and their covers are identified by orange coloring. The safety labels are attached to high voltage and other related parts (see page 1-7). You must be familiar with the IMA system before working around it. Make sure you have read the Service Precautions in the IMA section before performing repairs or service (see page 12-3).

General Information

Chassis and Paint Codes
- '06 Model 1-2
- '07 Model 1-3
- '08 Model 1-4
- '09 Model 1-5

Identification Number Locations 1-6

Danger/Warning/Caution Label Locations 1-7

Under-hood Emission Control Label 1-9

Lift and Support Points 1-10

Towing 1-11

Parts Marking 1-12

Service Precautions 1-13

Chassis and Paint Codes

'06 Model

Vehicle Identification Number

JHM FA3 6 2 * 6 S 000001

a b c d e f g h

a. **Manufacturer, Make and Type of Vehicle**
JHM: Honda Motor Co., Ltd.
Honda passenger vehicle
b. **Line, Body and Engine Type**
FA3: Civic Hybrid/LDA2
c. **Body Type and Transmission Type**
6: 4-door Sedan/CVT
d. **Vehicle Grade (Series)**
2: MX
e. **Check Digit**
f. **Model Year**
6: '06
g. **Factory Code**
S:Suzuka Factory in Japan
h. **Serial Number**
000001—: USA models
800001—: Canada models

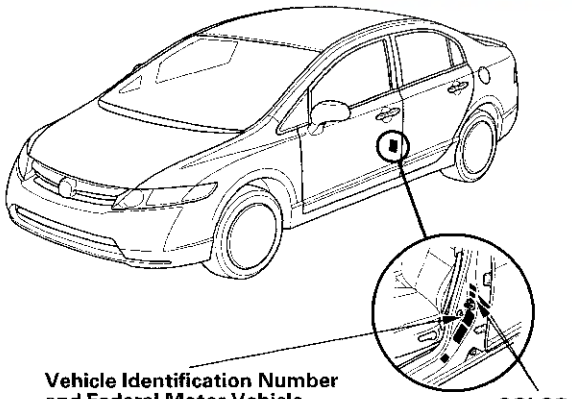

Vehicle Identification Number and Federal Motor Vehicle Safety Standard Certification Label.

Vehicle Identification Number and Canadian Motor Vehicle Safety Standard Certification Label.

Engine Number

LDA2 - 1000001

a b

a. **Engine Type**
LDA2: 1.3 L SOHC i-VTEC Sequential Multiport Fuel-injected engine
b. **Serial Number**

Motor Number

MF5 - 1000001

a b

a. **Motor Type**
MF5: DC brushless-3 phases
b. **Serial Number**

Transmission Number

SPSA - 1000001

a b

a. **Transmission Type**
SPSA: CVT
b. **Serial Number**

Paint Code

Code	Color	USA models	Canada models
NH-578	Taffeta White	○	○
NH-684P	Magnetic Pearl	○	○
NH-700M	Alabaster Silver Metallic	○	○
NH-701M	Galaxy Gray Metallic	○	
BG-51M	Opal Silver Blue Metallic	○	○

'07 Model

Vehicle Identification Number

JHM FA3 6 2 * 7 S 000001

a b c d e f g h

a. **Manufacturer, Make and Type of Vehicle**
JHM: Honda Motor Co., Ltd.
Honda passenger vehicle
b. **Line, Body and Engine Type**
FA3: Civic Hybrid/LDA2
c. **Body Type and Transmission Type**
6: 4-door Sedan/CVT
d. **Vehicle Grade (Series)**
2: MX
e. **Check Digit**
f. **Model Year**
7: '07
g. **Factory Code**
S:Suzuka Factory in Japan
h. **Serial Number**
000001—: USA models
800001—: Canada models

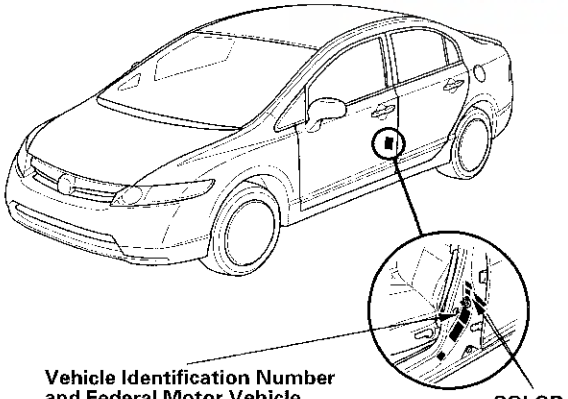

Vehicle Identification Number and Federal Motor Vehicle Safety Standard Certification Label.

Vehicle Identification Number and Canadian Motor Vehicle Safety Standard Certification Label.

Engine Number

LDA2 - 2000001

a b

a. **Engine Type**
LDA2: 1.3 L SOHC i-VTEC Sequential Multiport Fuel-injected engine
b. **Serial Number**

Motor Number

MF5 - 1000001

a b

a. **Motor Type**
MF5: DC brushless-3 phases
b. **Serial Number**

Transmission Number

SPSA - 2000001

a b

a. **Transmission Type**
SPSA: CVT
b. **Serial Number**

Paint Code

Code	Color	USA models	Canada models
NH-578	Taffeta White	○	○
NH-684P	Magnetic Pearl	○	○
NH-700M	Alabaster Silver Metallic	○	○
NH-701M	Galaxy Gray Metallic	○	
BG-51M	Opal Silver Blue Metallic	○	○

Chassis and Paint Codes (cont'd)

'08 Model

Vehicle Identification Number

JHM FA3 6 2 * 8 S 000001

a b c d e f g h

a. **Manufacturer, Make and Type of Vehicle**
JHM: Honda Motor Co., Ltd.
Honda passenger vehicle
b. **Line, Body and Engine Type**
FA3: Civic Hybrid/LDA2
c. **Body Type and Transmission Type**
6: 4-door Sedan/CVT
d. **Vehicle Grade (Series)**
2: MX
e. **Check Digit**
f. **Model Year**
8: '08
g. **Factory Code**
S:Suzuka Factory in Japan
h. **Serial Number**
000001—: USA models
800001—: Canada models

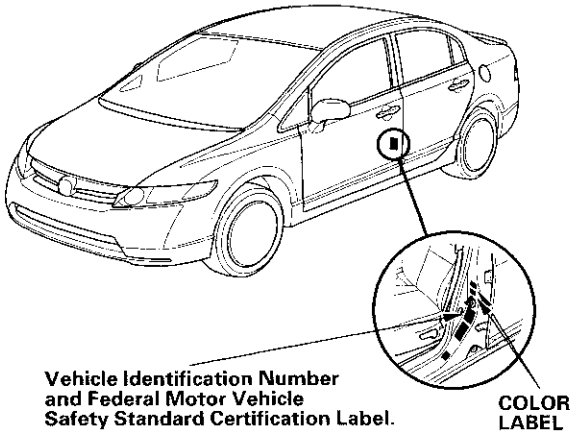

Engine Number

LDA2 - 3000001

a b

a. **Engine Type**
LDA2: 1.3 L SOHC i-VTEC Sequential Multiport Fuel-injected engine
b. **Serial Number**

Motor Number

MF5 - 1000001

a b

a. **Motor Type**
MF5: DC brushless-3 phases
b. **Serial Number**

Transmission Number

SPSA - 3000001

a b

a. **Transmission Type**
SPSA: CVT
b. **Serial Number**

Paint Code

Code	Color	USA models	Canada models
NH-578	Taffeta White	○	○
NH-684P	Magnetic Pearl	○	○
NH-700M	Alabaster Silver Metallic	○	○
NH-701M	Galaxy Gray Metallic	○	
BG-51M	Opal Silver Blue Metallic	○	○

'09 Model

Vehicle Identification Number

JHM FA3 6 2 * 9 S 000001

a b c d e f g h

a. **Manufacturer, Make and Type of Vehicle**
JHM: Honda Motor Co., Ltd.
Honda passenger vehicle
b. **Line, Body and Engine Type**
FA3: Civic Hybrid/LDA2
c. **Body Type and Transmission Type**
6: 4-door Sedan/CVT
d. **Vehicle Grade (Series)**
2: MX
e. **Check Digit**
f. **Model Year**
9: '09
g. **Factory Code**
S:Suzuka Factory in Japan
h. **Serial Number**
000001—: USA models
800001—: Canada models

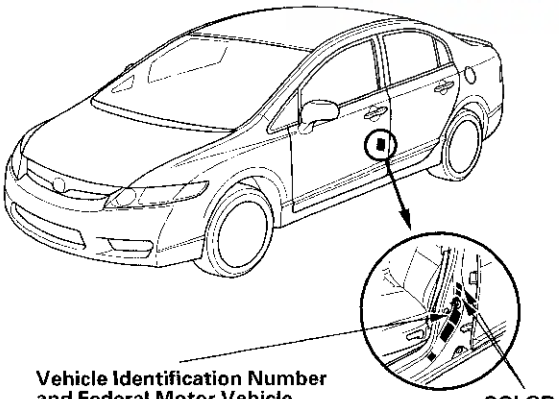

Vehicle Identification Number and Federal Motor Vehicle Safety Standard Certification Label.

Vehicle Identification Number and Canadian Motor Vehicle Safety Standard Certification Label.

Engine Number

LDA2 - 4000001

a b

a. **Engine Type**
LDA2: 1.3 L SOHC i-VTEC Sequential Multiport Fuel-injected engine
b. **Serial Number**

Motor Number

MF5 - 1000001

a b

a. **Motor Type**
MF5: DC brushless-3 phases
b. **Serial Number**

Transmission Number

SPSA - 3000001

a b

a. **Transmission Type**
SPSA: CVT
b. **Serial Number**

Paint Code

Code	Color	USA models	Canada models
NH-578	Taffeta White	○	○
NH-684P	Magnetic Pearl	○	○
NH-700M	Alabaster Silver Metallic	○	○
NH-731P	Crystal Black Pearl	○	○
NH-737M	Polished Metal Metallic	○	
NH-756P	Spectrum White Pearl	○	○
B-537M	Atomic Blue Pearl	○	○

Identification Number Locations

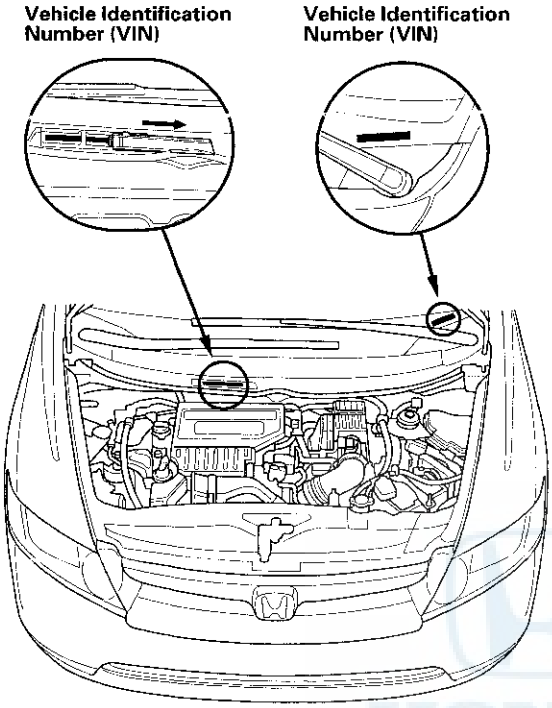

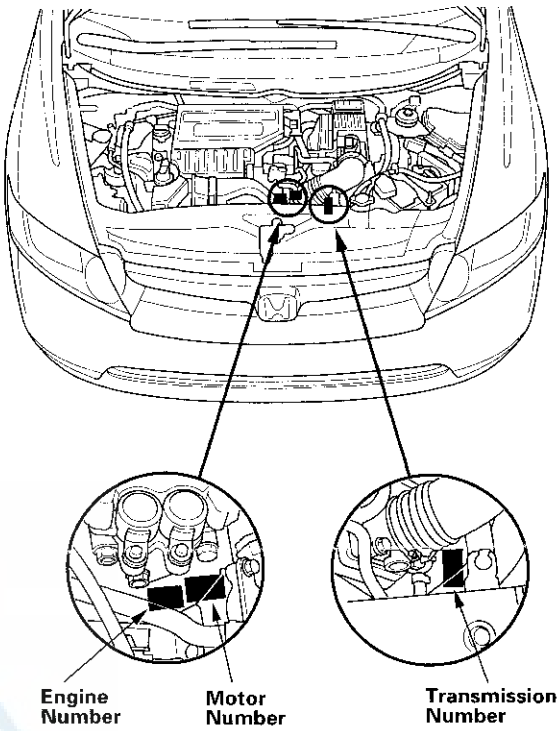

Danger/Warning/Caution Label Locations

Front Passenger's Compartment:

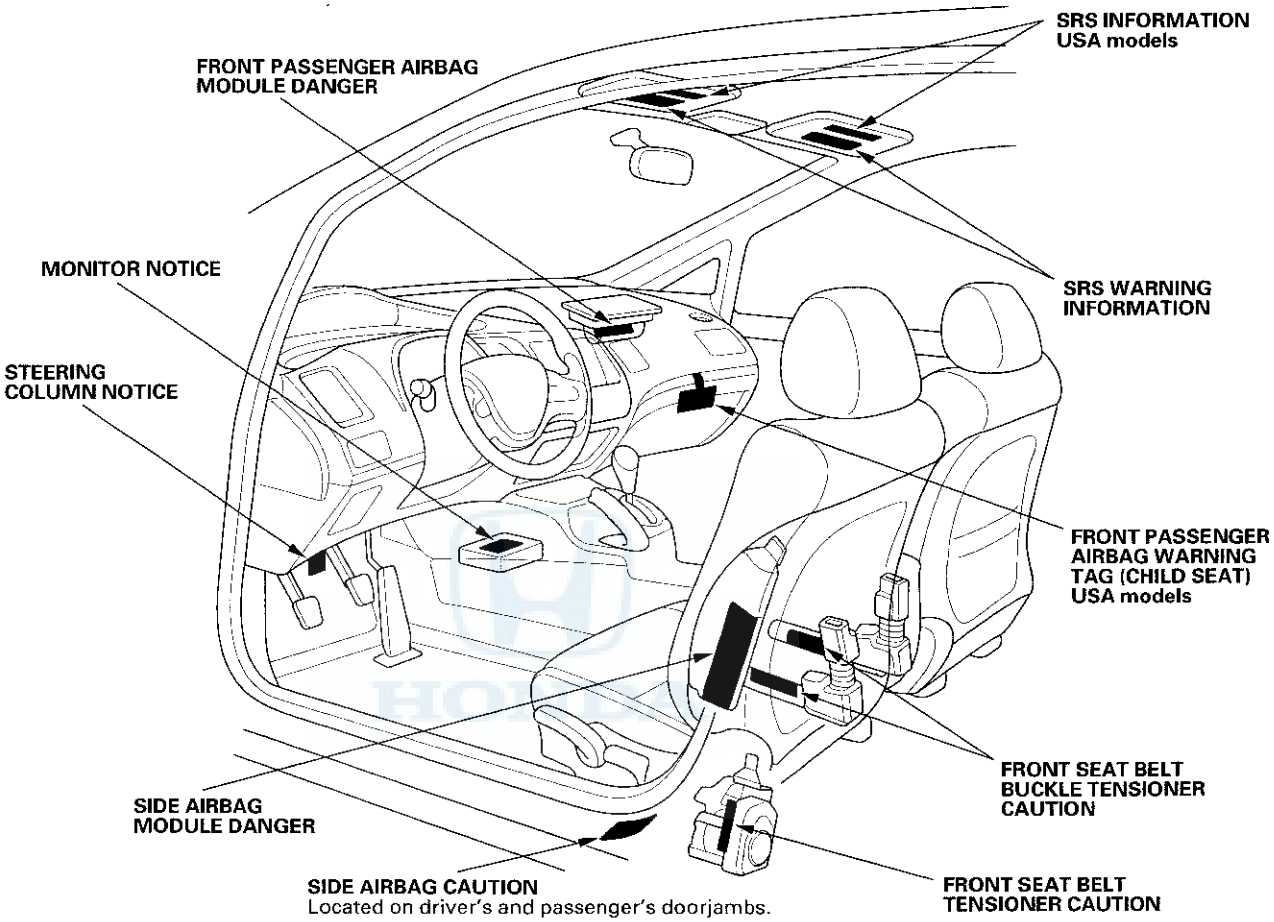

Steering Wheel:

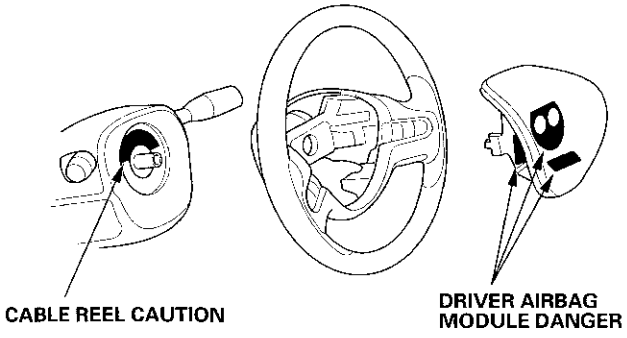

Rear Passenger's Compartment:

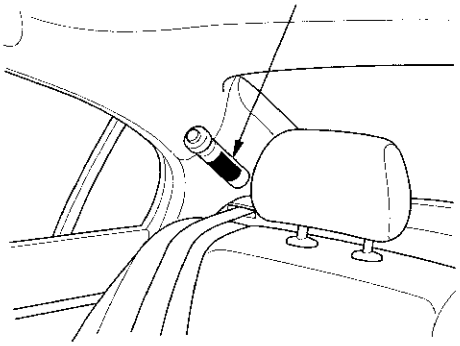

(cont'd)

Danger/Warning/Caution Label Locations (cont'd)

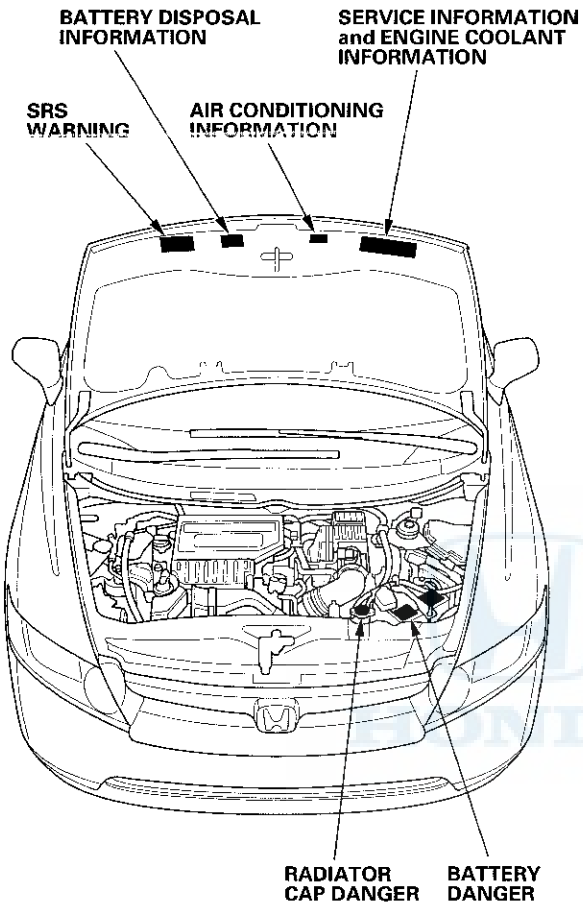

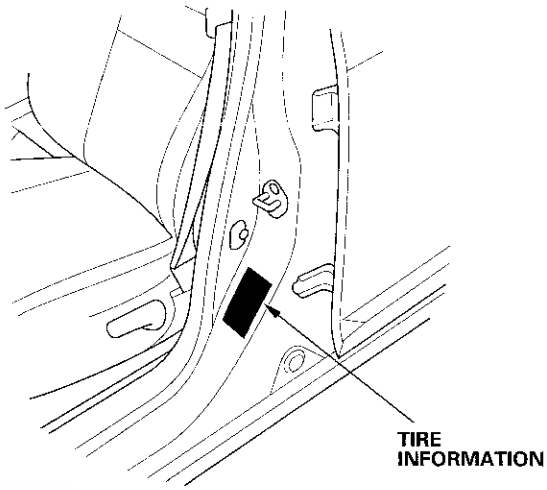

Rear Passenger's Compartment:

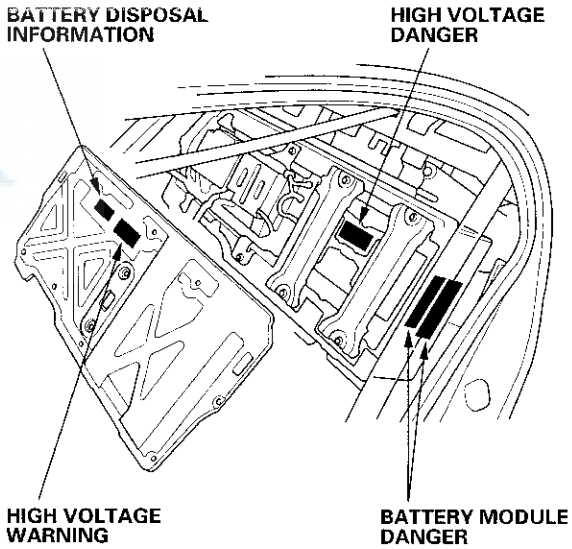

Under-hood Emission Control Label

Emission Group Identification

Example:

'06-07 Models

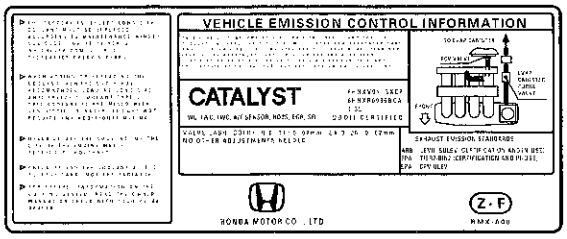

'08-09 Models

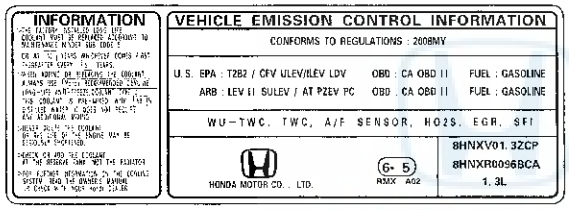

'06 Model
THIS VEHICLE CONFORMS TO U.S. EPA TIER 2 BIN 2 AND CFV ULEV REGULATIONS APPLICABLE TO 2006 MODEL YEAR NEW PASSENGER CARS AND CALIFORNIA REGULATIONS APPLICABLE TO 2006 MODEL YEAR NEW LEV II SULEV PASSENGER CARS. THIS VEHICLE HAS ALSO BEEN CERTIFIED AS AN AT-PZEV BY CALIFORNIA AIR RESOURCES BOARD. EPA CERTIFICATION TEST FUEL FOR CFV: EPA UNLEADED GASOLINE.

'07 Model
THIS VEHICLE CONFORMS TO U.S. EPA TIER 2 BIN 2 AND CFV ULEV REGULATIONS APPLICABLE TO 2007 MODEL YEAR NEW PASSENGER CARS AND CALIFORNIA REGULATIONS APPLICABLE TO 2007 MODEL YEAR NEW LEV II SULEV PASSENGER CARS. THIS VEHICLE HAS ALSO BEEN CERTIFIED AS AN AT-PZEV BY CALIFORNIA AIR RESOURCES BOARD. EPA CERTIFICATION TEST FUEL FOR CFV: EPA UNLEADED GASOLINE.

'08 Model
CONFORMS TO REGULATION: 2008 MY

'09 Model
CONFORMS TO REGULATION: 2009 MY

Test Group and Evaporative Family

Test Group

9 HNX V 01.3 CDH

a b c d e

a. **Model Year**
   6: '06
   7: '07
   8: '08
   9: '09
b. **Manufacturer Subcode**
   HNX: HONDA
c. **Family Type**
   V: LDV
d. **Displacement Group**
e. **Sequence Characters**
   XCP: '06 model
   JCP: '07 model
   ZCP: '08 model
   CDH: '09 model

Evaporative Family:

9 HNX R 0096 VZA

a b c d e

a. **Model Year**
   6: '06
   7: '07
   8: '08
   9: '09
b. **Manufacturer Subcode**
   HNX: HONDA
c. **Family Type**
   R: EVAP/ORVR
d. **Canister Working Capacity Group**
e. **Sequence Characters**

Lift and Support Points

NOTE: If you are going to remove heavy components such as the suspension or the fuel tank from the rear of the vehicle, first support the front of the vehicle with tall safety stands. When substantial weight is removed from the rear of the vehicle, the center of gravity can change, causing the vehicle to tip forward on the lift.

Vehicle Lift

1. Position the lift blocks (A) under the vehicle's front support points (B) and rear support points (C).

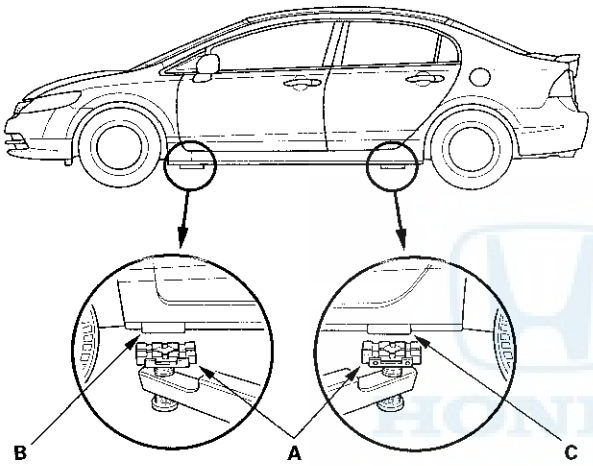

2. Raise the lift a few inches, and rock the vehicle gently to be sure it is firmly supported.

3. Raise the lift to its full height, and inspect the vehicle support points for solid contact with the lift blocks.

Safety Stands

To support the vehicle on safety stands, use the same support points as for a frame vehicle lift. Always use safety stands when working on or under any vehicle that is supported only by a jack.

Floor Jack

1. When lifting the front of the vehicle, set the parking brake. When lifting the rear of the vehicle, put the shift lever in the P position.

2. Block the wheels that are not being lifted.

3. Position the floor jack under the front jacking bracket (A) or the rear jacking bracket (B). Center the jacking bracket on the jack lift platform (C), and jack up the vehicle high enough to fit the safety stands under it.

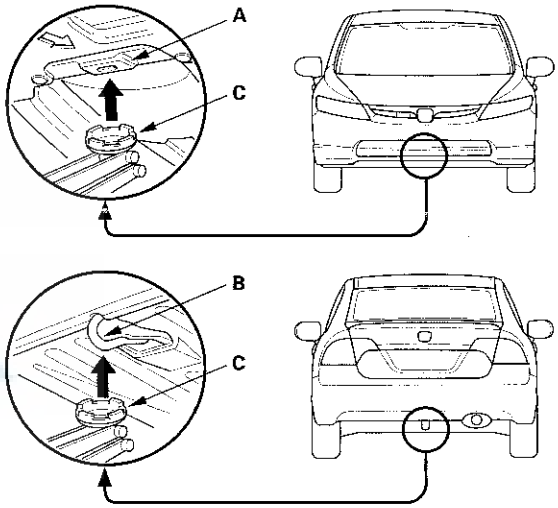

4. Position the safety stands under the support points, and adjust them so the vehicle is level.

5. Lower the vehicle onto the stands.

Towing

If the vehicle needs to be towed, call a professional towing service. Never tow the vehicle behind another vehicle with a rope or chain. It is very dangerous.

Emergency Towing
There are three popular methods of towing a vehicle.

Flat-bed Tow Truck Equipment — The operator loads the vehicle on the back of a flad-bed tow truck. **This is the best way of transporting the vehicle.**

To accommodate flat-bed tow truck equipment, the vehicle is equipped with front towing hooks (A), front tie down hook slots (B), rear towing hook (C), and rear tie down hook slots (D).

The towing hooks can be used with a winch to pull the vehicle onto the flat-bed tow truck, and the tie down hook slots can be used to secure the vehicle to the flat-bed tow truck.

Front:

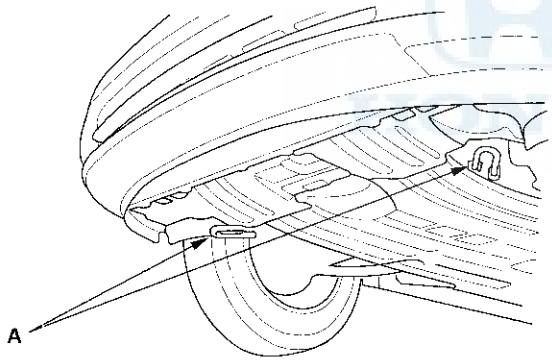

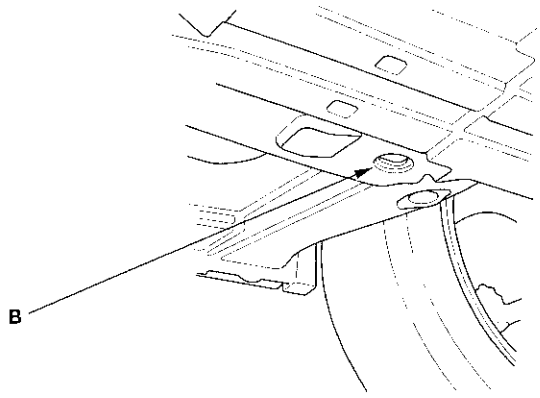

Rear:

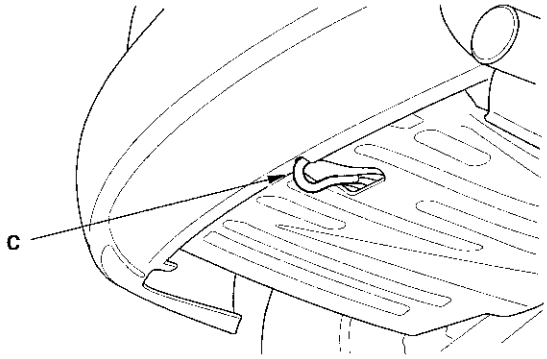

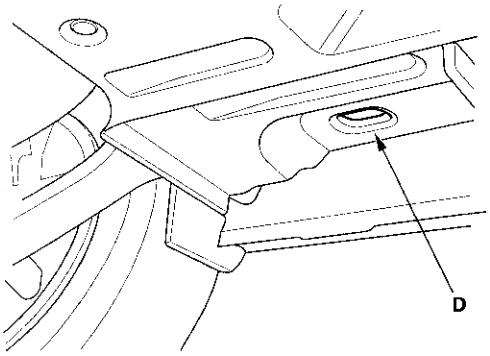

(cont'd)

Towing (cont'd)

Wheel Lift Equipment — The tow truck uses two pivoting arms that go under the tires (front or rear) and lifts them off the ground. The other two wheels remain on the ground. **This is an acceptable way of towing the vehicle.**

Sling-type Equipment — The tow truck uses metal cables with hooks on the ends. These hooks go around parts of the frame or suspension, and the cables lift that end of the vehicle off the ground. The vehicle's suspension and body can be seriously damaged if this method of towing is attempted. **This method of towing the vehicle is unacceptable.**

If the vehicle cannot be transported by a flat-bed tow truck, it should be towed with the front wheels off the ground. If the vehicle is damaged, and must be towed with the front wheels on the ground, or with all four wheels on the ground, do this:

- Release the parking brake.
- Start the engine.
- Shift to D, then to N.
- Turn off the engine.
- Leave the ignition switch in ACCESSORY (I) so the steering wheel does not lock.
- Make sure all accessories are turned off to minimize battery current draw.

It is best to tow the vehicle no farther than 50 miles (80 km), and keep the speed below 35 mph (55 km/h).

NOTICE

- Improper towing preparation will damage the transmission. Follow the above procedure exactly. If you cannot shift the transmission or start the engine, the vehicle must be transported on a flat-bed tow truck.
- Trying to lift or tow the vehicle by the bumpers will cause serious damage. The bumpers are not designed to support the vehicle's weight.

Parts Marking

To deter vehicle theft, certain major components are marked with the vehicle identification number (VIN). Original parts have self-adhesive labels. Replacement body parts have generic self-adhesive labels. These labels should not be removed. The original engine or transmission VIN plates are not transferable to the replacement engine or transmission.

NOTE: Be careful not to damage the parts marking labels during body repair. Mask the labels before repairing the part.

Service Precautions

IMA System

The Civic Hybrid has an Auto-Stop system that shuts the engine off under certain conditions to improve fuel economy when the vehicle comes to a stop. In Auto-Stop mode, driver input, such as releasing the brake pedal, causes the engine to restart.

Before servicing the Civic Hybrid, turn the ignition switch to LOCK (0) and remove the key so the engine cannot be started.

Before performing any service on the Civic Hybrid's IMA system, make sure to turn the battery module switch OFF and wait 5 minutes before working on the vehicle (see page 12-3).

HONDA

Specifications

Standards and Service Limits

Engine Electrical 2-2
Engine Assembly 2-2
Cylinder Head 2-3
Engine Block 2-4
Engine Lubrication 2-5
Cooling System 2-5
Fuel and Emissions 2-5
CVT and CVT Differential 2-6
Steering 2-10
Suspension 2-10
Brakes 2-11
Air Conditioning 2-11

Design Specifications

Dimensions 2-12
Weight 2-12
Engine 2-12
Starter 2-12
IMA Motor 2-12
IMA Battery 2-12
IMA Motor Controller 2-12
CVT 2-12
Steering 2-13
Suspension 2-13
Tires 2-13
Wheel Alignment 2-13
Brakes 2-13
Air Conditioning 2-13
Electrical Ratings 2-14
Body Specifications 2-15

Standards and Service Limits

Engine Electrical

Item	Measurement	Qualification	Standard or New	Service Limit
Ignition coil	Rated voltage		12 V	
	Firing order		1—3—4—2	
Spark plug	Type		NGK: ILFR6J-11K DENSO: SK20HPR-L11	
	Gap		1.0—1.1 mm (0.039—0.043 in.)	
Ignition timing	At idle Check the *red* mark	In N or P	10±2 °BTDC	
Starter	Output		1.0 kW	
	Commutator mica depth		0.40—0.50 mm (0.016—0.020 in.)	0.15 mm (0.006 in.)
	Commutator runout		0.02 mm (0.001 in.) max.	0.05 mm (0.002 in.)
	Commutator O.D.		28.0—28.1 mm (1.102—1.106 in.)	27.5 mm (1.083 in.)
	Brush length		11.1—11.5 mm (0.44—0.45 in.)	4.3 mm (0.17 in.)

Engine Assembly

Item	Measurement	Qualification	Standard or New
Compression	Pressure	Minimum	980 kPa (10.0 kgf/cm², 142 psi)
	Check the engine with the starter cranking	Maximum variation	200 kPa (2.0 kgf/cm², 28 psi)

HONDA

Cylinder Head

Item	Measurement	Qualification		Standard or New	Service Limit
Head	Warpage			0.07 mm (0.0028 in.)	0.08 mm (0.0031 in.)
	Height			119.9—120.1 mm (4.720—4.728 in.)	———
Camshaft	End play			0.05—0.15 mm (0.002—0.006 in.)	0.3 mm (0.01 in.)
	Camshaft-to-holder oil clearance			0.050—0.089 mm (0.0020—0.0035 in.)	0.15 mm (0.006 in.)
	Total runout			0.03 mm (0.001 in.) max.	0.04 mm (0.002 in.)
	Cam lobe height	Intake	1st	29.700 mm (1.1692 in.)	———
			2nd	35.568 mm (1.4003 in.)	———
			3rd	36.060 mm (1.4196 in.)	———
		Exhaust	1st	29.900 mm (1.1771 in.)	———
			2nd	35.699 mm (1.4054 in.)	———
Valve	Clearance (cold)	Intake		0.15—0.19 mm (0.006—0.007 in.)	———
		Exhaust		0.24—0.28 mm (0.009—0.011 in.)	———
	Stem O.D.	Intake		5.48—5.49 mm (0.2157—0.2161 in.)	5.45 mm (0.215 in.)
		Exhaust		5.45—5.46 mm (0.2146—0.2150 in.)	5.42 mm (0.213 in.)
	Stem-to-guide clearance	Intake		0.020—0.050 mm (0.0008—0.0020 in.)	0.08 mm (0.003 in.)
		Exhaust		0.050—0.080 mm (0.0020—0.0031 in.)	0.11 mm (0.004 in.)
Valve seat	Width	Intake		0.850—1.150 mm (0.0335—0.0453 in.)	1.60 mm (0.063 in.)
		Exhaust		1.250—1.550 mm (0.0492—0.0610 in.)	2.00 mm (0.079 in.)
	Stem installed height	Intake		47.7—48.1 mm (1.878—1.894 in.)	48.4 mm (1.906 in.)
		Exhaust		47.6—48.0 mm (1.874—1.890 in.)	48.3 mm (1.902 in.)
Valve spring	Free length	Intake		NIPPON HATSUJO: 53.25 mm (2.096 in.)	———
				CHUO HATSUJO: 53.26 mm (2.097 in.)	
		Exhaust		SUN CALL: 57.32 mm (2.257 in.)	———
				CHUO HATSUJO: 57.31 mm (2.256 in.)	
Valve guide	I.D.	Intake		5.51—5.53 mm (0.217—0.218 in.)	5.55 mm (0.219 in.)
		Exhaust		5.51—5.53 mm (0.217—0.218 in.)	5.55 mm (0.219 in.)
	Installed height	Intake		16.25—16.75 mm (0.640—0.659 in.)	———
		Exhaust		16.25—16.75 mm (0.640—0.659 in.)	———
Rocker arm	Arm-to-shaft clearance			0.017—0.045 mm (0.0003—0.0018 in.)	0.067 mm (0.0026 in.)

Standards and Service Limits

Engine Block

Item	Measurement	Qualification	Standard or New	Service Limit
Block	Warpage of deck		0.07 mm (0.003 in.) max.	0.10 mm (0.004 in.)
	Bore diameter		73.00—73.02 mm (2.8740—2.8748 in.)	73.07 mm (2.8767 in.)
	Bore taper		———	0.05 mm (0.002 in.)
	Reboring limit		———	0.25 mm (0.01 in.)
Piston	Skirt O.D. at 13 mm (0.5 in.) from bottom of skirt		72.98—72.99 mm (2.8732—2.8736 in.)	72.97 mm (2.8728 in.)
	Clearance in cylinder		0.010—0.040 mm (0.0004—0.0016 in.)	0.05 mm (0.002 in.)
	Ring groove width	Top	1.050—1.060 mm (0.0409—0.0413 in.)	1.07 mm (0.042 in.)
		Second	1.220—1.230 mm (0.0481—0.0484 in.)	1.250 mm (0.0492 in)
		Oil	2.005—2.020 mm (0.0789—0.0795 in.)	2.050 mm (0.0807 in.)
Piston ring	Ring-to-groove clearance	Top	0.065—0.090 mm (0.0025—0.0035 in.)	0.15 mm (0.006 in.)
		Second	0.030—0.055 mm (0.0012—0.0022 in.)	0.13 mm (0.005 in.)
	Ring end gap	Top	0.15—0.30 mm (0.006—0.012 in.)	0.60 mm (0.024 in.)
		Second	0.35—0.50 mm (0.014—0.020 in.)	0.65 mm (0.026 in.)
		Oil	0.20—0.70 mm (0.008—0.028 in.)	0.80 mm (0.031 in.)
Piston pin	O.D.		17.996—18.000 mm (0.7085—0.7087 in.)	———
	Pin-to-piston clearance		0.010—0.018 mm (0.0004—0.0007 in.)	———
Connecting rod	Pin-to-rod interference		0.019—0.036 mm (0.0007—0.0014 in.)	———
	Small-end bore diameter		17.964—17.977 mm (0.707—0.708 in.)	———
	Large-end bore diameter		43.0 mm (1.69 in.)	———
	End play installed on crankshaft		0.15—0.30 mm (0.006—0.012 in.)	0.40 mm (0.016 in.)
Crankshaft	Main journal diameter		49.976—50.000 mm (1.9676—1.9685 in.)	———
	Rod journal diameter		39.976—40.000 mm (1.5739—1.5748 in.)	———
	Rod/main journal taper		0.005 mm (0.0002 in.)	0.010 mm (0.0004 in.)
	Rod/main journal out-of-round		0.005 mm (0.0002 in.)	0.010 mm (0.0004 in.)
	End play		0.10—0.35 mm (0.004—0.014 in.)	0.45 mm (0.018 in.)
	Runout		0.03 mm (0.0012 in.) max.	0.04 mm (0.0016 in.)
Crankshaft bearing	Main bearing-to-journal oil clearance		0.018—0.036 mm (0.0007—0.0014 in.)	0.050 mm (0.0020 in.)
	Rod bearing clearance		0.020—0.038 mm (0.0008—0.0015 in.)	0.050 mm (0.0020 in.)

Engine Lubrication

Item	Measurement	Qualification	Standard or New	Service Limit
Engine oil	Capacity	Engine overhaul	3.8 L (4.0 US qt)	
		Oil change including filter	3.2 L (3.4 US qt)	
		Oil change without filter	3.0 L (3.2 US qt)	
Oil pump	Inner rotor-to-outer rotor clearance		0.02—0.14 mm (0.001—0.006 in.)	0.20 mm (0.008 in.)
	Pump housing-to-outer rotor clearance		0.10—0.18 mm (0.004—0.007 in.)	0.20 mm (0.008 in.)
	Pump housing-to-rotor axial clearance		0.02—0.06 mm (0.001—0.002 in.)	0.15 mm (0.006 in.)
Relief valve	Relief valve, oil pressure with oil temperature at 176 °F (80 °C)	At idle	70 kPa (0.7 kgf/cm², 10 psi) min.	———
		At 3,000 rpm	340 kPa (3.5 kgf/cm², 50 psi) min.	———

Cooling System

Item	Measurement	Qualification	Standard or New
Radiator	Coolant capacities (including engine, heater, hoses, and reservoir) Use Honda Long Life Antifreeze/ Coolant Type 2	Engine overhaul	6.0 L (1.59 US gal)
		Coolant change	4.75 L (1.25 US gal)
Coolant reservoir	Coolant capacity		0.4 L (0.11 US gal)
Radiator cap	Opening pressure		93—123 kPa (0.95—1.25 kgf/cm², 14—18 psi)
Thermostat	Opening temperature	Begins to open	176—183 °F (80—84 °C)
		Fully open	203 °F (95 °C)
	Valve lift at fully open		8.0 mm (0.31 in.) min.
Drive belt	Tension		Auto-tensioner

Fuel and Emissions

Item	Measurement	Qualification	Standard or New
Fuel pressure	Pressure with fuel pressure gauge connected		260—310 kPa (2.7—3.2 kgf/cm², 38—46 psi)
Fuel tank	Capacity		46.6 L (12.3 US gal)
Engine idle	Idle speed without load	In N or P	820±50 rpm
	Idle speed with high electrical load (A/C switch ON, temperature set to max cool, blower fan on High, rear window defogger ON, and headlights on high beam)	In N or P	820±50 rpm

Standards and Service Limits

CVT and CVT Differential

Item	Measurement	Qualification	Standard or New	Service Limit
Continuously variable transmission fluid	Capacity Use Honda CVTF	Fluid change	2.8 L (3.0 US qt)	
		Overhaul	5.1 L (5.4 US qt)	
Hydraulic pressure	Forward clutch pressure	At 1,700 rpm in D	1.57—1.84 MPa (16.0—18.8 kgf/cm², 228—267 psi)	
	Reverse brake pressure	At 1,700 rpm in R	1.57—1.84 MPa (16.0—18.8 kgf/cm², 228—267 psi)	
	Drive pulley pressure	At 1,700 rpm in N	0.24—0.54 MPa (2.5—5.5 kgf/cm², 36—78 psi)	
	Driven pulley pressure	At 1,700 rpm in N	0.83—1.13 MPa (8.5—11.5 kgf/cm², 120—164 psi)	
	Lubrication pressure	At 3,000 rpm in N	0.25—0.40 MPa (2.5—4.1 kgf/cm², 36—58 psi)	
Stall speed	Check with vehicle on level ground	D, S, L, R	2,350 rpm	2,200—2,500 rpm
ATF pump	ATF pump drive gear shaft O.D.		9.98—9.99 mm (0.3929—0.3933 in.)	When worn or damaged
	ATF pump driven gear shaft O.D.		9.98—9.99 mm (0.3929—0.3933 in.)	When worn or damaged
	ATF pump body bushing I.D.	Drive gear shaft	10.000—10.015 mm (0.3937—0.3943 in.)	When worn or damaged
		Driven gear shaft	10.000—10.015 mm (0.3937—0.3943 in.)	When worn or damaged
	ATF pump gear side clearance		0.015—0.035 mm (0.0006—0.0014 in.)	———
	Clearance between ATF pump gear and body	Drive gear	0.0350—0.0505 mm (0.0014—0.0020 in.)	———
		Driven gear	0.0350—0.0505 mm (0.0014—0.0020 in.)	———
Clutch	Clearance between clutch end-plate and top disc	Forward clutch	0.6—0.8 mm (0.024—0.031 in.)	———
		Start clutch	0.5—0.7 mm (0.020—0.028 in.)	———
		Reverse brake	0.55—0.70 mm (0.022—0.028 in.)	———
	Clutch return spring free length	Forward clutch	30.5 mm (1.20 in.)	28.5 mm (1.12 in.)
		Start clutch	35.8 mm (1.41 in.)	33.8 mm (1.33 in.)
		Reverse brake	18.1 mm (0.71 in.)	16.1 mm (0.63 in.)
	Clutch disc thickness	Forward clutch	1.94 mm (0.076 in.)	When worn or damaged
		Start clutch	1.94 mm (0.076 in.)	When worn or damaged
		Reverse brake	2.00 mm (0.079 in.)	When worn or damaged
	Clutch plate thickness	Forward clutch	2.00 mm (0.079 in.)	When discolored
		Start clutch	2.30 mm (0.091 in.)	When discolored
		Reverse brake	1.95 mm (0.077 in.)	When discolored
	Forward clutch-end plate thickness	Mark 4	2.7 mm (0.106 in.)	When discolored
		Mark 5	2.8 mm (0.110 in.)	When discolored
		Mark 6	2.9 mm (0.114 in.)	When discolored
		Mark 7	3.0 mm (0.118 in.)	When discolored
		Mark 8	3.1 mm (0.122 in.)	When discolored
		Mark 9	3.2 mm (0.126 in.)	When discolored
		Mark 10	3.3 mm (0.130 in.)	When discolored
		Mark 14	3.4 mm (0.134 in.)	When discolored
		Mark 15	3.5 mm (0.138 in.)	When discolored
		Mark 16	3.6 mm (0.142 in.)	When discolored
		Mark 17	3.7 mm (0.146 in.)	When discolored
		Mark 18	3.8 mm (0.150 in.)	When discolored
		Mark 19	3.9 mm (0.154 in.)	When discolored
		Mark 20	4.0 mm (0.157 in.)	When discolored
		Mark 21	4.1 mm (0.161 in.)	When discolored
		Mark 22	4.2 mm (0.165 in.)	When discolored
		Mark 23	4.3 mm (0.169 in.)	When discolored
		Mark 24	4.4 mm (0.173 in.)	When discolored
		Mark 25	4.5 mm (0.177 in.)	When discolored

Item	Measurement	Qualification	Standard or New	Service Limit
Clutch (cont'd)	Reverse brake end-plate thickness	Mark 1	3.6 mm (0.142 in.)	When discolored
		Mark A	3.7 mm (0.146 in.)	When discolored
		Mark 2	3.8 mm (0.150 in.)	When discolored
		Mark B	3.9 mm (0.154 in.)	When discolored
		Mark 3	4.0 mm (0.157 in.)	When discolored
		Mark C	4.1 mm (0.161 in.)	When discolored
		Mark 4	4.2 mm (0.165 in.)	When discolored
		Mark D	4.3 mm (0.169 in.)	When discolored
		Mark 5	4.4 mm (0.173 in.)	When discolored
		Mark E	4.5 mm (0.177 in.)	When discolored
		Mark 6	4.6 mm (0.181 in.)	When discolored
		Mark F	4.7 mm (0.185 in.)	When discolored
		Mark 7	4.8 mm (0.189 in.)	When discolored
		Mark 8	5.0 mm (0.197 in.)	When discolored
Input shaft	Diameter of needle bearing contact area	Flywheel side	19.987—20.000 mm (0.7869—0.7874 in.)	When worn or damaged
		Forward clutch side	19.987—20.000 mm (0.7869—0.7874 in.)	When worn or damaged
	Thrust clearance	ATF pump drive sprocket hub	0.37—0.65 mm (0.015—0.026 in.)	———
		Planetary carrier	0.050—0.115 mm (0.0020—0.0045 in.)	———
	Feed pipe O.D.	Drive pulley feed pipe	6.97—6.98 mm (0.274—0.275 in.)	6.95 mm (0.274 in.)
		Forward clutch feed pipe	11.47—11.48 mm (0.4516—0.4520 in.)	11.45 mm (0.451 in.)
	Feed pipe bushing I.D.	Drive pulley feed pipe	7.000—7.015 mm (0.2756—0.2762 in.)	7.030 mm (0.277 in.)
		Forward clutch feed pipe	11.500—11.518 mm (0.4528—0.4535 in.)	11.533 mm (0.454 in.)
	Sealing ring groove width		2.00—2.10 mm (0.079—0.083 in.)	2.105 mm (0.083 in.)
	22 x 28 mm thrust shim thickness (ATF pump drive sprocket hub)	C	1.15 mm (0.045 in.)	When worn or damaged
		D	1.40 mm (0.055 in.)	When worn or damaged
		E	1.65 mm (0.065 in.)	When worn or damaged
		F	1.90 mm (0.075 in.)	When worn or damaged
		G	2.15 mm (0.085 in.)	When worn or damaged
		H	2.40 mm (0.094 in.)	When worn or damaged

(cont'd)

Standards and Service Limits

CVT and CVT Differential (cont'd)

Item	Measurement	Qualification	Standard or New	Service Limit
Input shaft (cont'd)	25 x 31 mm thrust shim thickness (planetary carrier)	A	1.05 mm (0.041 in.)	When worn or damaged
		B	1.12 mm (0.044 in.)	When worn or damaged
		C	1.19 mm (0.047 in.)	When worn or damaged
		D	1.26 mm (0.050 in.)	When worn or damaged
		E	1.33 mm (0.052 in.)	When worn or damaged
		F	1.40 mm (0.055 in.)	When worn or damaged
		G	1.47 mm (0.058 in.)	When worn or damaged
		H	1.54 mm (0.061 in.)	When worn or damaged
		I	1.61 mm (0.063 in.)	When worn or damaged
		J	1.68 mm (0.066 in.)	When worn or damaged
		K	1.75 mm (0.069 in.)	When worn or damaged
		L	1.82 mm (0.072 in.)	When worn or damaged
		M	1.085 mm (0.0427 in.)	When worn or damaged
		N	1.155 mm (0.0455 in.)	When worn or damaged
		O	1.225 mm (0.0482 in.)	When worn or damaged
		P	1.295 mm (0.0510 in.)	When worn or damaged
		Q	1.365 mm (0.0537 in.)	When worn or damaged
		R	1.435 mm (0.0565 in.)	When worn or damaged
		S	1.505 mm (0.0593 in.)	When worn or damaged
		T	1.575 mm (0.0620 in.)	When worn or damaged
		U	1.645 mm (0.0648 in.)	When worn or damaged
		V	1.715 mm (0.0675 in.)	When worn or damaged
		W	1.785 mm (0.0703 in.)	When worn or damaged
Drive pulley shaft	Diameter of needle bearing contact area	Flywheel side	24.007—24.020 mm (0.945—0.946 in.)	When worn or damaged
		Forward clutch side	24.007—24.020 mm (0.945—0.946 in.)	When worn or damaged
	I.D.	At sealing ring	24.007—24.020 mm (0.945—0.946 in.)	When worn or damaged
Driven pulley shaft	Diameter of needle bearing contact area	Start clutch side	43.981—43.991 mm (1.7315—1.7319 in.)	When worn or damaged
	Thrust clearance	Start clutch side	0—0.13 mm (0—0.005 in.)	———
	25.5 mm cotter thickness (start clutch hub)	A	2.90 mm (0.114 in.)	When worn or damaged
		B	3.00 mm (0.118 in.)	When worn or damaged
		C	3.10 mm (0.122 in.)	When worn or damaged
		D	3.20 mm (0.126 in.)	When worn or damaged
	Start clutch feed pipe O.D.	End cover side	6.97—6.98 mm (0.274—0.275 in.)	6.95 mm (0.274 in.)
		Flywheel housing side	8.97—8.98 mm (0.353—0.354 in.)	8.95 mm (0.352 in.)
	Driven pulley shaft feed pipe O.D.		11.47—11.48 mm (0.4516—0.4520 in.)	11.45 mm (0.451 in.)
	Start clutch feed pipe bushing I.D.	End cover side	7.000—7.015 mm (0.2756—0.2762 in.)	7.030 mm (0.277 in.)
		Flywheel housing side	9.000—9.015 mm (0.354—0.355 in.)	9.030 mm (0.356 in.)
	Driven pulley shaft feed pipe bushing I.D.		11.500—11.518 mm (0.4528—0.4535 in.)	11.533 mm (0.454 in.)
	Secondary drive gear sealing ring groove width		2.500—2.650 mm (0.098—0.104 in.)	2.655 mm (0.105 in.)
	Start clutch end plate I.D.		88.900—88.935 mm (3.500—3.501 in.)	When worn or damaged

Item	Measurement	Qualification	Standard or New	Service Limit
Final drive shaft	Secondary drive gear thrust clearance		0—0.15 mm (0—0.006 in.)	———
	25 x 35 mm thrust shim thickness	A	2.8 mm (0.110 in.)	When worn or damaged
		B	2.9 mm (0.114 in.)	When worn or damaged
		C	3.0 mm (0.118 in.)	When worn or damaged
		D	3.1 mm (0.122 in.)	When worn or damaged
		E	3.2 mm (0.126 in.)	When worn or damaged
		F	3.3 mm (0.130 in.)	When worn or damaged
		G	3.4 mm (0.134 in.)	When worn or damaged
		H	3.5 mm (0.138 in.)	When worn or damaged
		I	3.6 mm (0.142 in.)	When worn or damaged
		J	3.7 mm (0.146 in.)	When worn or damaged
		K	3.8 mm (0.150 in.)	When worn or damaged
		L	3.9 mm (0.154 in.)	When worn or damaged
		M	4.0 mm (0.157 in.)	When worn or damaged
Park gear and pawl	———		———	When worn or damaged
CVT differential carrier	Pinion shaft contact area I.D.		15.010—15.028 mm (0.591—0.592 in.)	———
	Clearance between carrier and pinion shaft		0.026—0.062 mm (0.001—0.002 in.)	0.1 mm (0.004 in.)
	Driveshaft/intermediate shaft contact area I.D.		26.025—26.045 mm (1.0246—1.0254 in.)	———
	Clearance between carrier and driveshaft/intermediate shaft		0.045—0.086 mm (0.002—0.003 in.)	0.12 mm (0.005 in.)
	Clearance between set ring and carrier bearing outer race		0—0.15 mm (0—0.006 in.)	Adjust
CVT differential pinion gear	Backlash		0.05—0.15 mm (0.002—0.006 in.)	———

HONDA

Standards and Service Limits

Steering

Item	Measurement	Qualification	Standard or New
Steering wheel	Rotational play measured at outside edge with engine running		0—10 mm (0—0.39 in.)
	Initial turning load measured at outside edge with engine running		34 N (3.5 kgf, 7.7 lbf)
Gearbox	Angle of rack guide screw loosened from locked position		7±3°

Suspension

Item	Measurement	Qualification	Standard or New	Service Limit
Wheel alignment	Camber	Front	—0°03′±30′	
		Rear (without "C" marks on the rear upper arm)	$-1°39'^{+1°05'}_{-0°45'}$	
		Rear (with "C" marks on the rear upper arm)	$-0°54'^{+1°05'}_{-0°45'}$	
	Caster	Front	7°06′±1°	
	Total toe-in	Front	0±2 mm (0±0.08 in.)	
		Rear	$2^{-2.1}$ mm ($0.08^{+0.08}_{-0.04}$ in.)	
	Front wheel turning angle	Inward	39°53′±2°	
		Outward (reference)	31°48′	
Wheel	Runout	Axial	0—0.7 mm (0—0.03 in.)	2.0 mm (0.08 in.)
		Radial	0—0.7 mm (0—0.03 in.)	1.5 mm (0.06 in.)
Wheel bearing	End play	Front	0—0.05 mm (0—0.002 in.)	
		Rear	0—0.05 mm (0—0.002 in.)	

HONDA

Brakes

Item	Measurement	Qualification	Standard or New	Service Limit
Parking brake	Distance traveled when lever pulled with 196 N (20 kgf, 44 lbf) of force		8 to 10 clicks	
Brake pedal	Pedal height (carpet moved aside)		158 mm (6 1/4 in.)	
	Free play		1—5 mm (1/16—3/16 in.)	
Brake disc	Thickness	Front	20.9—21.1 mm (0.82—0.83 in.)	19.0 mm (0.75 in.)
		Rear ('09 model)	8.9—9.1 mm (0.35—0.36 in.)	8.0 mm (0.31 in.)
	Runout		———	0.04 mm (0.0016 in.)
	Parallelism		———	0.015 mm (0.0006 in.)
Brake pad	Thickness	Front	9.5—10.5 mm (0.37—0.41 in.)	1.6 mm (0.06 in.)
		Rear ('09 model)	8.3—9.4 mm (0.33—0.37 in.)	1.6 mm (0.06 in.)
Rear brake ('06-08 models)	Brake drum I.D.		219.9—220.0 mm (8.657—8.661 in.)	221 mm (8.70 in.)
	Brake shoe lining thickness		4.5 mm (0.18 in.)	2.0 mm (0.08 in.)

Air Conditioning

Item	Measurement	Qualification	Standard or New
Refrigerant	Type		HFC-134a (R-134a)
	Capacity or system		400—450 g (14.1 —15.9 oz)
Refrigerant oil	Type		SE-10Y (P/N 38899-RCJ-A01 or 38899-RMX-A01)
	Capacity of components	Condenser	50 mL (1 2/3 fl·oz)
		Evaporator	40 mL (1 1/3 fl·oz)
		Each line and hose	10 mL (1/3 fl·oz)
		Receiver	10 mL (1/3 fl·oz)
		Compressor	130—140 mL (4 1/3—4 2/3 fl·oz)
Compressor	Field coil resistance	At 68 °F (20 °C)	3.05 —3.35 Ω
	Pulley-to-armature plate clearance		0.35—0.65 mm (0.014—0.026 in.)

HONDA

Design Specifications

Item	Measurement	Qualification	Specification
DIMENSIONS	Overall length		4,489 mm (176.7 in.)
	Overall width		1,752 mm (69.0 in.)
	Overall height		1,430 mm (56.3 in.)
	Wheelbase		2,700 mm (106.3 in.)
	Track	Front	1,501 mm (59.1 in.)
		Rear	1,529 mm (60.2 in.)
	Seating capacity		Five (5)
WEIGHT	Gross Vehicle Weight Rating (GVWR)		1,720 kg (3,792 lbs)
ENGINE	Type		Water-cooled, 4-stroke SOHC i-VTEC gasoline engine
	Cylinder arrangement		Inline 4-cylinder, transverse
	Bore and stroke		73.0 x 80.0 mm (2.87 x 3.15 in.)
	Displacement		1,339 cm^3 (mL) (82 cu in.)
	Compression ratio		10.8
	Valve train		Chain driven, SOHC i-VTEC 2 valves per cylinder
	Lubrication system		Forced, wet sump, with trochoid pump
	Fuel required		Regular UNLEADED gasoline with 87 Pump Octane Number or higher
STARTER	Type		Gear reduction
	Normal output		1.0 kW
	Normal voltage		12 V
	Hour rating		30 seconds
	Direction of rotation		Counterclockwise as viewed from drive end
IMA MOTOR	Type		DC brushless
IMA BATTERY	Type		7.2 V Ni-MH
	Number		22
	Output		158.4 V
IMA MOTOR CONTROLLER	Type		Motor Control Module (MCM)
CVT	Type		Electronically-controlled continuously variable transmission, multi plates wet sump, hydraulic
	Primary reduction		Direct 1:1
	Gear ratio	Low—High	2.526—0.421
		Reverse	4.508—1.874
	Final reduction	Type	Single helical gear
		Gear ratio	3.938

HONDA

Item	Measurement	Qualification	Specification
STEERING	Type		Electrical power-assisted rack and pinion
	Overall ratio		13.52
	Turns, lock-to-lock		2.71
	Steering wheel diameter		360 mm (14.2 in.)
SUSPENSION	Type	Front	Independent MacPherson strut with stabilizer, coil spring
		Rear	Independent double wishbone with stabilizer, coil spring
	Shock absorber	Front and rear	Telescopic, hydraulic, nitrogen gas-filled
TIRES	Size	Front and rear	P195/65R15 89S
		Spare	T125/70D15 95M
WHEEL ALIGNMENT	Camber	Front	−0°03′
		Rear (without "C" marks on the rear upper arm)	−1°39′
		Rear (with "C" marks on the rear upper arm)	−0°54′
	Caster	Front	7°06′
	Total toe-in	Front	0 mm (0 in.)
		Rear	2 mm (0.08 in.)
	Front wheel turning angle	Inward	39°53′
		Outward (reference)	31°48′
BRAKES	Type of service brake	Front	Power-assisted self-adjusting ventilated disc
		Rear ('06-08 models)	Power-assisted self-adjusting drum
		Rear ('09 model)	Power-assisted self-adjusting solid disc
	Type of parking brake		Mechanical actuating, rear wheels
	Pad friction surface area	Front	41.5 cm^2 (6.43 sq in.) x 2
		Rear ('09 model)	20.6 cm^2 (3.19 sq in.) x 2
	Shoe friction surface area ('06-08 models)	Rear	73.9 cm^2 (11.45 sq in.) x 2
AIR CONDITIONING	Compressor	Type	Scroll
		Capacity	Belt: 75 mL (4.58 cu in.)/rev. Motor: 15 mL (0.92 cu in.)/rev.
		Maximum speed	Belt: 10,000 rpm Motor: 5,000 rpm
		Lubricant capacity	130 mL (4 1/3 fl·oz)
		Lubricant type	SE-10Y
	Condenser	Type	Corrugated fin
	Evaporator	Type	Corrugated fin
	Blower	Type	Radial
		Motor input	220 W/12 V
		Speed control	Infinitely variable
		Maximum capacity	470 m^3 (16,571 cu ft)/h
	Temperature control		Air-mix type
	Compressor clutch	Type	Dry, single plate, Poly-V belt drive
		Electrical power consumption at 68 °F (20 °C)	42 W maximum at 12 V
	Refrigerant	Type	HFC-134a (R-134a)
		Quantity	400—450 g (14.1—15.9 oz)

(cont'd)

Design Specifications

Item	Measurement	Qualification	Specification
ELECTRICAL RATINGS	Battery		12 V—35 Ah/20 HR (12 V—28 Ah/5 HR)
	Fuses	Under-hood fuse/relay box ('06-07 models)	100 A, 80 A, 70 A, 50 A, 40 A, 30 A, 20 A, 15 A, 10 A, 7.5 A
		Under-hood fuse/relay box ('08-09 models)	100 A, 70 A, 60 A, 50 A, 40 A, 30 A, 20 A, 15 A, 10 A, 7.5 A
		Under-dash fuse/relay box	30 A, 20 A, 15 A, 10 A, 7.5 A
		Auxiliary under-hood fuse/relay box	15 A, 10 A, 7.5 A
	Light bulbs	Headlight high beam	12 V—60 W (HB3)
		Headlight low beam	12 V—51 W (HB4)
		Front side marker/parking/ turn signal lights	12 V—21/5 W
		Side turn signal lights	LED
		Rear turn signal lights	12 V—21 W
		Rear side marker lights	12 V—5 W
		Brake/taillights	12 V—21/5 W
		Inner taillight	12 V—5 W
		High mount brake light	LED
		Back-up lights	12 V—21 W
		License plate lights	12 V—5 W
		Front individual map lights	12 V—8 W
		Ceiling light	12 V—8 W
		Gauge lights	LED
		Indicator lights	LED
		Trunk light	12 V—5 W
		Dash lights Brightness controller and odometer select/ reset switch light	12 V—0.84 W
		Hazard warning switch light	12 V—0.56 W
		Power window switches	LED
		Power mirror switch light	LED
	Washer reservoir	Capacity (USA models)	2.5 L (2.6 US qt)
		Capacity (Canada models)	4.5 L (4.8 US qt)

Body Specifications

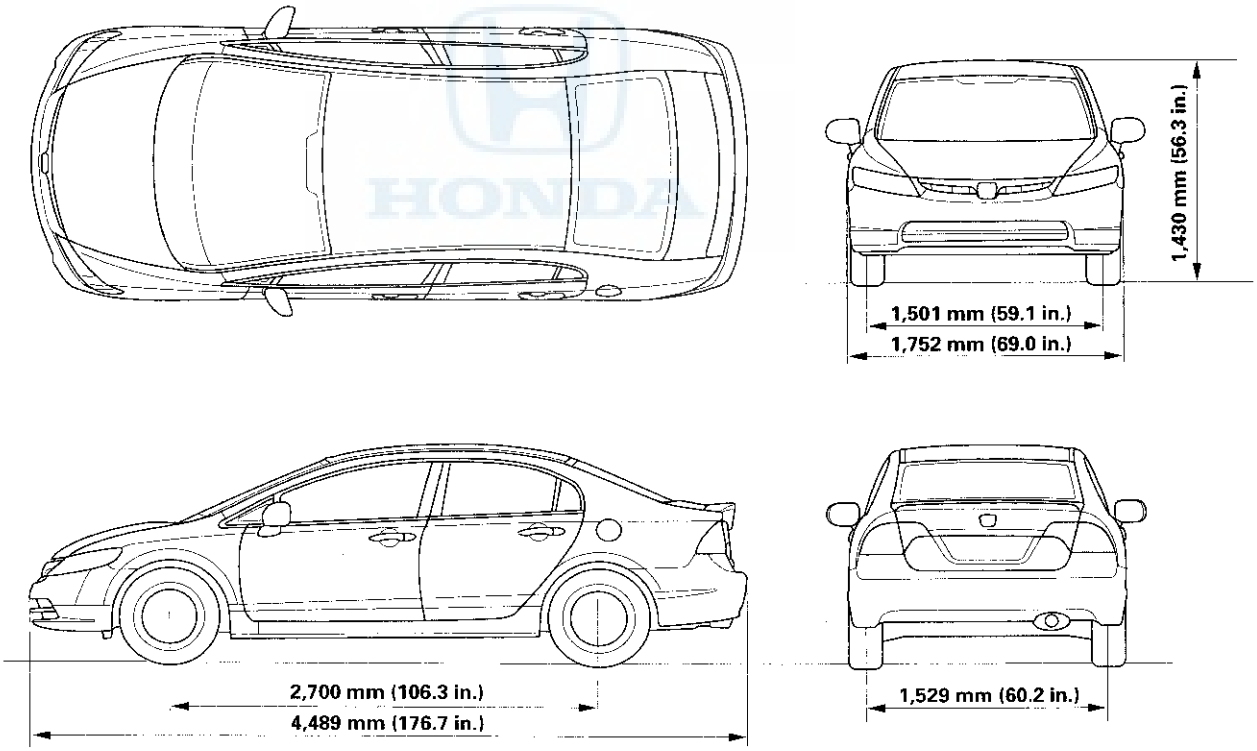

Maintenance

Lubricants and Fluids **3-2**

Maintenance Minder

General Information 3-4
Maintenance Main Items 3-7
Maintenance Sub Items 3-8

Lubricants and Fluids

For details of the lubrication points and the type of lubricants to be applied, refer to the illustrated index and the various work procedures (such as Assembly/Reassembly, Replacement, Overhaul, Installation, etc.) contained in each section.

	Application	Lubricant or Fluid
A	Engine	Honda Motor Oil: American Honda P/N 08798-9022 (0W-20) Honda Canada P/N 08798-8023C (0W-20) Look for the API certification seal on the oil container. Make sure it says "For Gasoline Engines." SAE viscosity: See chart.
B	CVT	Honda CVTF: P/N 08200-9006 Always use Honda CVTF. Using a non-Honda CVTF can affect shift quality.
C	Brake system (including ABS/VSA lines)	Honda DOT 3 Brake Fluid: P/N 08798-9008 Always use Honda DOT 3 Brake Fluid. Using a non-Honda brake fluid can cause corrosion and decrease the life of the system.
D	Caliper piston boots and seals, piston pins and boots	Honda Silicone Grease: P/N 08C30-B0234M
E F G H I	Brake servo unit clevis pin Battery terminals Fuel fill door Trunk hinges Hood hinges and hood latch	Multipurpose Grease
J	Rear brake shoe linkage	Molykote 44MA
K	Air conditioning compressor	Compressor Oil: SE-10Y (P/N 38899-RCJ-A01 or 38899-RMX-A01) for refrigerant HFC-134a (R-134a)
L	Cooling system	Honda Long Life Antifreeze/Coolant Type 2: P/N OL999-9001

API CERTIFICATION SEAL

Recommended Engine Oil
Engine oil viscosity for ambient temperature ranges

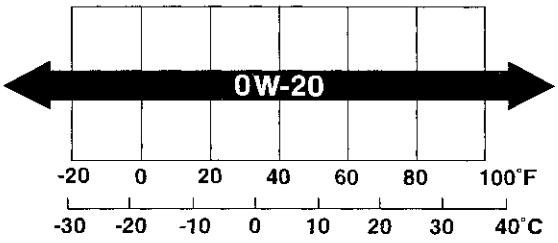

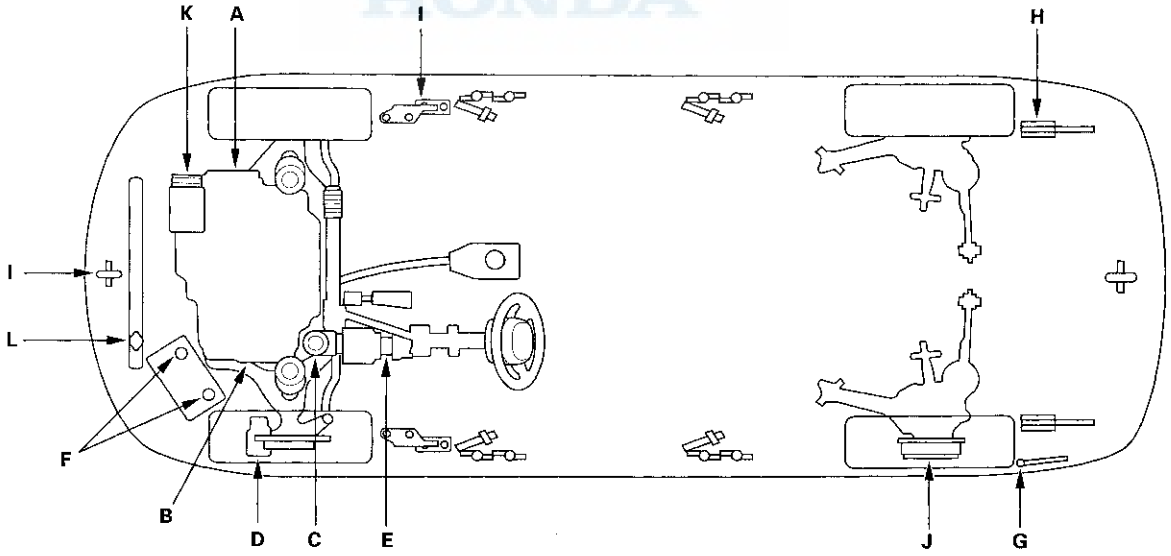
K
A
I
H
I
L
F
B
D
C
E
J
G

Maintenance Minder

General Information

Information Display

The maintenance minder is an important feature of the information display. Based on engine and transmission operating conditions, the Civic Hybrid's onboard computer (PCM) calculates the remaining engine oil and the CVT fluid life. The system also displays the remaining engine oil life along with the code for other scheduled maintenance items needing service.

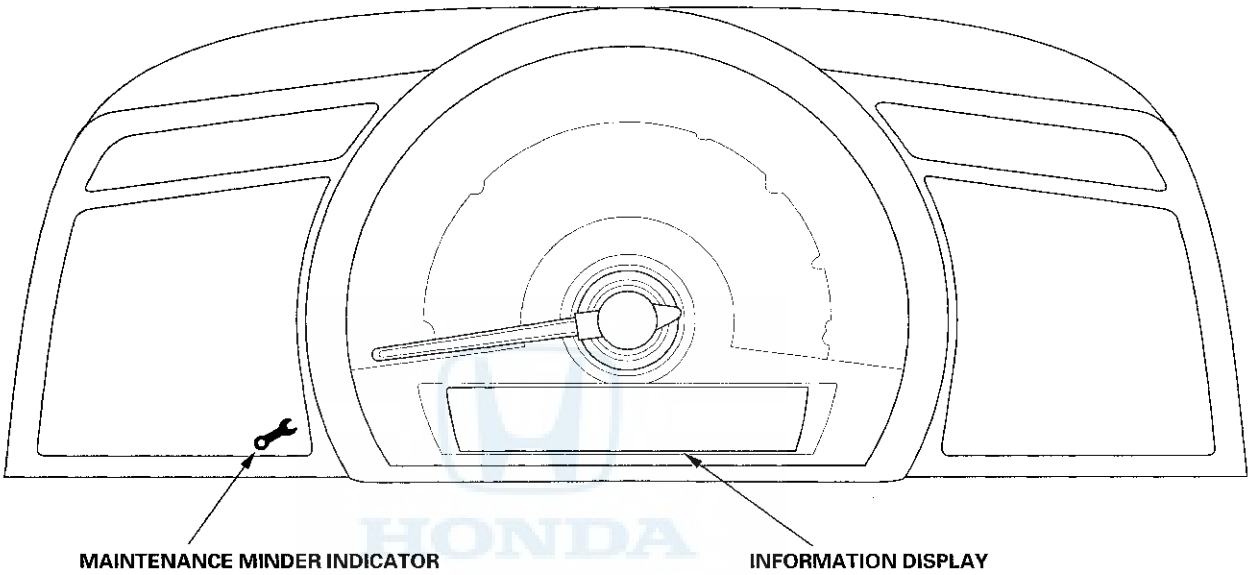

Driver's Side Dashboard:

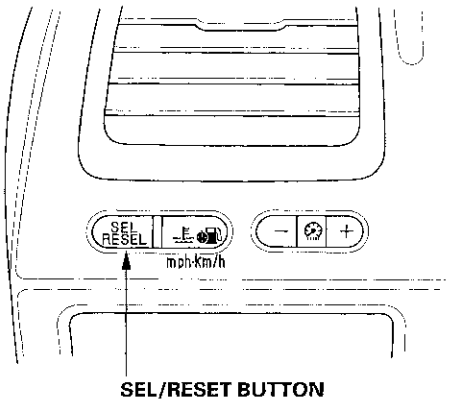

Service Information

1. The remaining engine oil life (A) is shown as a percentage on the information display. To see the current engine oil life, turn the ignition switch to ON (II), then push and release the SEL/RESET button repeatedly until the engine oil life displays.

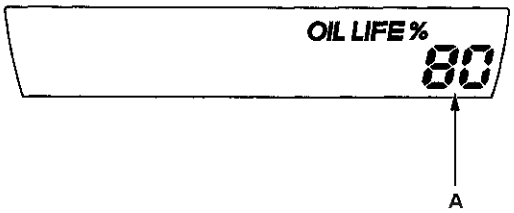

2. When the ignition switch is ON (II), and the remaining engine oil life is 6 % to 15 %, the remaining engine oil life (A) and other scheduled maintenance item(s) needing service are displayed. The maintenance minder indicator (B) also comes on when the engine oil life is 15 % or less. To cancel the display and the indicator, press the SEL/RESET button.

   - Complete list of maintenance main items (C) (see page 3-7).
   - Complete list of maintenance sub items (D) (see page 3-8).

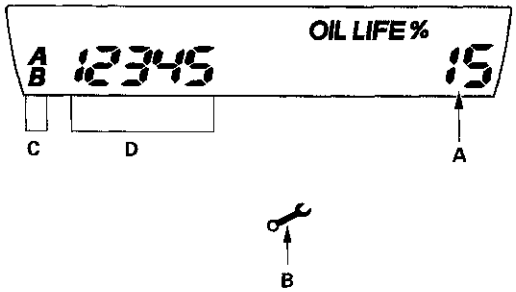

3. When the ignition switch is ON (II), and the remaining engine oil life is 1 % to 5 %, the message "SERVICE" (A) is displayed along with engine oil life and the same maintenance item code(s).

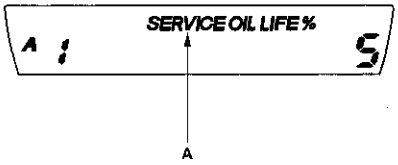

4. When the ignition switch is ON (II), and the remaining oil life is 0 %, the engine oil life indicator (A) blinks. Pressing the SEL/RESET button cancels the display, but the maintenance minder indicator stays on.

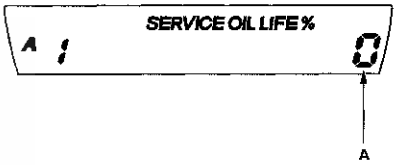

5. If the indicated maintenance is not done, the engine oil life indicator shows a negative mileage, for example "—10," on the display. If the negative mileage is between 0 and —9, the indicator is displayed for only a few seconds when the ignition switch is turned to ON (II). The negative mileage remains displayed after the vehicle is driven more than 10 miles (for USA models) or 10 km (for Canada models) after 0 % oil life is reached, and the display cannot be canceled. This means the indicated maintenance item(s) should have been done more than 10 miles (or 10 km) ago.

(cont'd)

General Information (cont'd)

Resetting the Maintenance Information Display

NOTE:
- The vehicle must be stopped to reset the display.
- If a required service is done and the display is not reset, or if the maintenance display is reset without doing the service, the system will not show the proper maintenance timing. This can lead to serious mechanical problems because there will be no accurate record of when the required maintenance is needed.
- The engine oil life and the maintenance item(s) can be independently reset with the HDS.

1. Turn the ignition switch to ON (II).
2. Push and release the SEL/RESET button repeatedly until the engine oil life indicator is displayed.
3. Press and hold the SEL/RESET button for about 10 seconds. The engine oil life indicator and the maintenance item code(s) will blink, then release the button.

   NOTE: If you are resetting the display when the engine oil life is more than 15 %, make sure any maintenance item(s) requiring service are done before resetting the display.
4. Press and hold the SEL/RESET button for another 5 seconds. The maintenance item code(s) will disappear, and the engine oil life will reset to "100".

Resetting Individual Maintenance Items

1. Connect the Honda Diagnostic System (HDS) to the data link connector (DLC) (see step 2 on page 11-3).
2. Turn the ignition switch to ON (II).
3. Make sure the HDS communicates with the vehicle and the powertarain control module (PCM). If it doesn't communicate, troubleshoot the DLC circuit (see page 11-213).
4. Select GAUGES in the BODY ELECTRICAL with the HDS.
5. Select ADJUSTMENT in the GAUGES with the HDS.
6. Select SERVICE REMINDER in the ADJUSTMENT with the HDS.
7. Select RESET in the SERVICE REMINDER with the HDS.
8. Select the individual maintenance item you wish to reset.

Maintenance Main Items

If the message "SERVICE" does not appear more than 12 months after the display is reset, change the engine oil every year.

NOTE:
- Replace the brake fluid every 3 years (independent of the maintenance messages in the information display).
- Inspect idle speed every 160,000 miles (256,000 km).
- Adjust the valves during services A, B, 1, 2, or 3, only if they are noisy.

Symbol	Maintenance Main Items
A	Replace engine oil (see page 8-10). Engine oil capacity without oil filter: 3.0 L (3.2 US qt).
B	Replace engine oil and oil filter (see page 8-11). Engine oil capacity with oil filter: 3.2 L (3.4 US qt).
	Check front and rear brakes (see page 19-3). • Check pads and discs for wear (thickness), damage, and cracks. • Check calipers for damage, leaks, and tightness of mounting bolts. • Check the wheel cylinder for leaks. • Check the brake linings for cracking, glazing, wear, or contamination.
	Check parking brake adjustment (see page 19-7). Check the number of clicks (8 to 10) when the parking brake lever is pulled with 196 N (20 kgf, 44 lbf) of force.
	Inspect tie-rod ends, steering gearbox, and gearbox boots (see page 17-5). • Check steering linkage. • Check boots for damage and leaking grease.
	Inspect suspension components (see page 18-3). • Check bolts for tightness. • Check condition of ball joint boots for deterioration and damage.
	Inspect driveshaft boots (see page 16-4). Check boots for cracks and boot bands for tightness.
	Inspect brake hoses and lines including ABS/VSA lines (see page 19-34). Check the master cylinder and ABS/VSA modulator-control unit for damage and leakage.
	Inspect all fluid levels, condition of fluid, and check for leaks. • Engine coolant (see page 10-6) • CVT fluid (CVTF) (see page 14-175) • Brake fluid (see page 19-95) • Windshield washer fluid
	Inspect exhaust system* (see page 9-8). Check catalytic converter heat shields, exhaust pipes, and muffler for damage, leaks, and tightness.
	Inspect fuel lines* (see page 11-352) and connections* (see page 11-354). Check for loose connections, cracks, and deterioration; retighten loose connections and replace damaged parts.

NOTE: According to state and federal regulations, failure to do the maintenance items marked with an asterisk (*) will not void the customer's emissions warranties. However, Honda recommends that all maintenance services be done at the recommended interval, to ensure long-term reliability.

Maintenance Sub Items

Number	Maintenance Sub Items
1	Rotate tires, and check tire inflation and condition. Follow the pattern shown in the Owner's Manual.
2	Replace air cleaner element (see page 11-371). Replace every 15,000 miles (24,000 km), if the vehicle is driven primarily in dusty conditions.
	Replace dust and pollen filter (see page 21-99). • If the vehicle is driven mostly in areas that have high concentrations of dust, pollen, or soot in the air, replace every 15,000 miles (24,000 km). • Replace the filter whenever airflow from the heating and air conditioning system is less than normal.
	Inspect drive belt (see page 10-9). Look for cracks and damage, then check the position of the drive belt auto-tensioner indicator.
3	Replace CVT fluid (see page 14-176). Capacity: 2.8 L (3.0 US qt); use Honda CVTF.
4	Replace spark plugs (see page 4-20). Use ILFR6J-11K (NGK) or SKJ20HPR-L11 (DENSO).
	Inspect valve clearance (cold) (see page 6-10). Intake: 0.15—0.19 mm (0.006—0.007 in.), Exhaust: 0.24—0.28 mm (0.009—0.011 in.)
5	Replace engine coolant (see page 10-6). Capacity (including the reservoir): 4.75 L (1.25 US gal); use Honda Long Life Antifreeze/Coolant Type 2.

SUPPLEMENTAL RESTRAINT SYSTEM (SRS) (If engine electrical maintenance is required)

The Civic Hybrid SRS includes a driver's airbag in the steering wheel hub, a passenger's airbag in the dashboard above the glove box, seat belt tensioners in the front seat belt retractors, seat belt buckle tensioners in the front seat belt buckles, side curtain airbags in the sides of the roof, and side airbags in the front seat-backs. Information necessary to safely service the SRS is included in this Service Manual. Items marked with an asterisk (*) on the contents page include or are located near SRS components. Servicing, disassembling, or replacing these items requires special precautions and tools, and should be done by an authorized Honda dealer.

- To avoid rendering the SRS inoperative, which could lead to personal injury or death in the event of a severe frontal or side collision, all SRS service work should be done by an authorized Honda dealer.
- Improper service procedures, including incorrect removal and installation of the SRS, could lead to personal injury caused by unintentional deployment of the airbags, side airbags, and/or side curtain airbags.
- Do not bump or impact the SRS unit, front impact sensors, side impact sensors, or rear safing sensor when the ignition switch is in ON (II), or for at least 3 minutes after the ignition switch is turned to LOCK (0); otherwise, the system may fail in a collision, or the airbags may deploy.
- SRS electrical connectors are identified by yellow color coding. Related components are located in the steering column, front console, dashboard, dashboard lower panel, in the dashboard above the glove box, in the front seats, in the roof side, and around the floor. Do not use electrical test equipment on these circuits.

INTEGRATED MOTOR ASSIST (IMA) SYSTEM (If engine electrical maintenance is required)

IMA components are located in this area. The IMA is a high-voltage system. The high voltage cables and their covers are identified by orange coloring. The safety labels are attached to high voltage and other related parts (see page 1-7). You must be familiar with the IMA system before working around it. Make sure you have read the Service Precautions in the IMA section before performing repairs or service (see page 12-3).

Engine Electrical

Starting System

Component Location Index 4-2
Symptom Troubleshooting Index 4-3
Circuit Diagram 4-4
Starter System Circuit Troubleshooting 4-5
Starter Performance Test 4-9
Starter Removal and Installation 4-10
Starter Overhaul 4-12

Ignition System

Component Location Index 4-17
Circuit Diagram 4-18
Ignition Timing Inspection 4-19
Ignition Coil Removal/Installation 4-20
Spark Plug Inspection 4-20

Charging System

Refer to the IMA Section 12

Cruise Control

Component Location Index 4-22
Symptom Troubleshooting Index 4-23
Circuit Diagram 4-25
Cruise Control Input Test 4-26
* Cruise Control Combination Switch Test/Replacement 4-28

Component Location Index

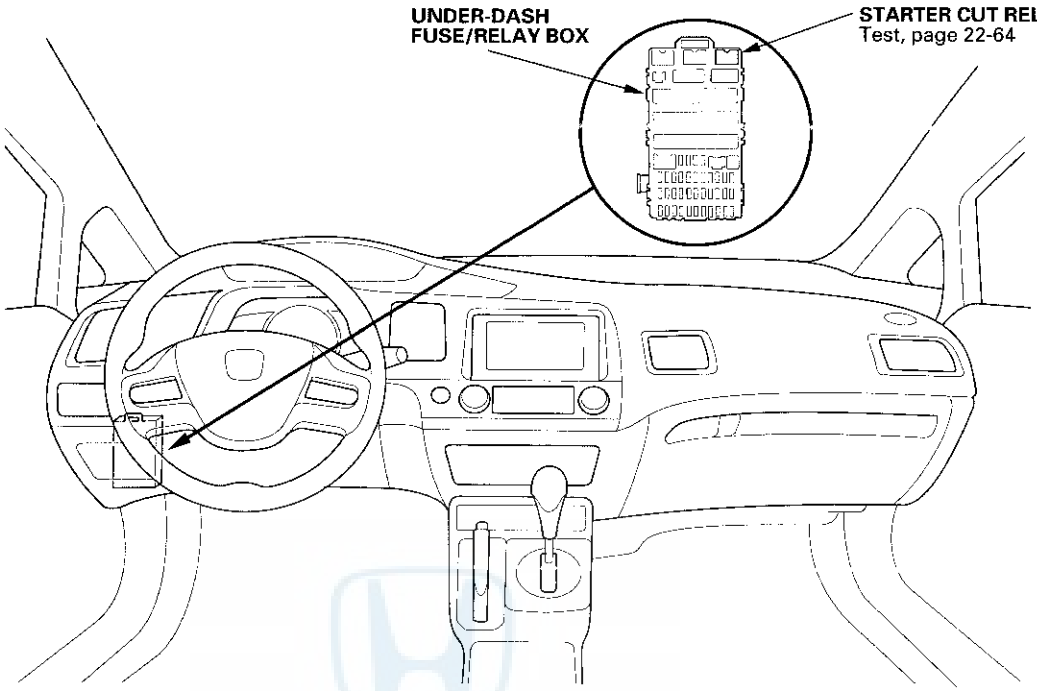

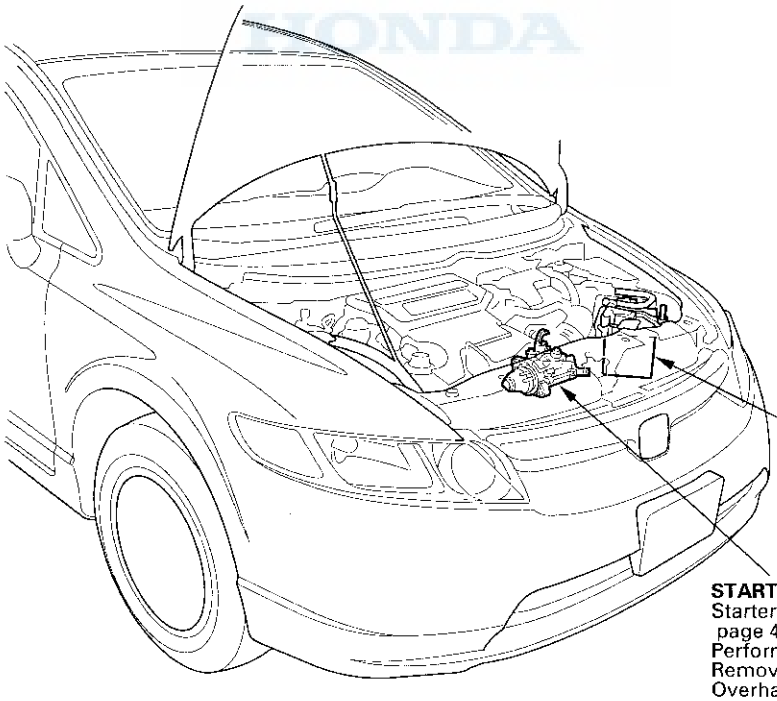

Symptom Troubleshooting Index

Symptom	Diagnostic procedure	Also check for
Engine does not start (does not crank)	1. Check for PGM-FI DTCs (see page 11-3). 2. Check for loose battery terminals or connections. 3 Test the 12 V battery for a low state of charge (see page 22-61). 4. Check the starter (see page 4-5). 5. Check the starter cut relay (see page 22-64). 6. Check the transmission range switch (see page 14-211). 7. Check the ignition switch or wire (see page 22-66).	
Engine cranks, but does not start	1. Check for PGM-FI DTCs (see page 11-3). 2. Check for IMMOBI status and function (see page 22-295). 3. Check the fuel pressure: • '06 model (see page 11-350) • '07-09 models (see page 11-350) 4. Check for a plugged fuel filter (see page 11-363). 5. Check for a plugged or damaged fuel line (see page 11-352). 6. Check the throttle body (see page 11-369). 7. Check for low engine compression (see page 6-6). 8. Check for a damaged or broken cam chain. 9. Do the powertrain control module (PCM) reset in the PGM-FI INSPECTION menu to cancel ALL INJECTORS STOP with the Honda Diagnostic System (HDS).	Weak or fouled spark plugs
Engine is hard to start	1. Check for PGM-FI DTCs (see page 11-3). 2. Check the fuel pressure: • '06 model (see page 11-350) • '07-09 models (see page 11-350) 3. Check for a plugged fuel filter (see page 11-363). 4. Check for a plugged or damaged fuel line (see page 11-352).	Weak or fouled spark plugs
Engine cranks slowly	1. Check for loose battery terminals or connections. 2. Test the 12 V battery for a low state of charge (see page 22-61). 3. Check the starter for binding (see page 4-5). 4. Check for excessive drag in the engine. 5. Check for excessive drag in the transmission.	

Circuit Diagram

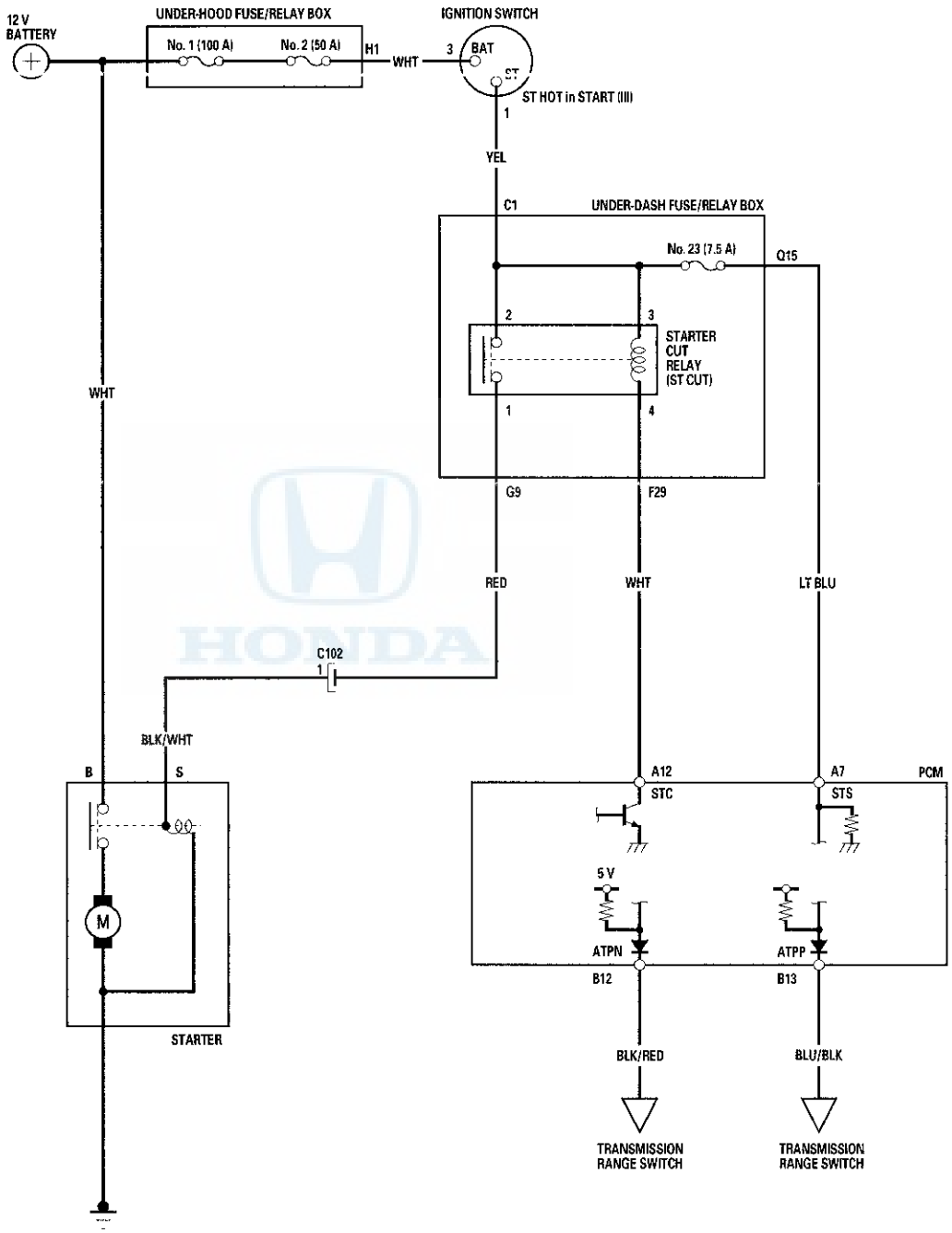

Starter System Circuit Troubleshooting

Special Tools Required
Alternator, Regulator, Battery & Starter tester OTC3131
Available through the Honda Tool and Equipment Program 888-424-6857

NOTE:
- Air temperature must be between 59 and 100 °F (15 and 38 °C) during this procedure.
- After the inspection, you must reset the powertrain control module (PCM). Otherwise, the PCM will continue to stop the fuel injectors from operating.
- The 12 V battery must be in good condition and fully charged.

1. Connect the alternator, regulator, battery & starter tester (OTC3131) to the battery as shown.

   NOTE: The probe is not used for battery testing.

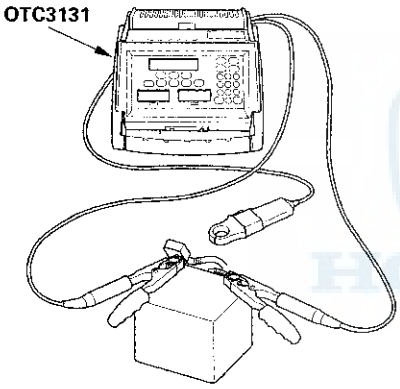

2. Do the BATTERY TEST.

   Does the display indicate GOOD or GOOD, LOW CHARGE?

   YES—The battery is OK. Go to step 3.

   NO—If the display indicates BAD BATTERY, replace the battery, then retest. If the display indicates CHARGE & RETEST, charge the battery, then retest.

3. Connect the Honda Diagnostic System (HDS) to the data link connector (DLC) (see step 2 on page 11-3).

4. Turn the ignition switch to ON (II).

5. Make sure the HDS communicates with the vehicle and the PCM. If it does not communicate, troubleshoot the DLC circuit (see page 11-213).

6. Select ALL INJECTORS STOP in the PGM-FI INSPECTION menu with the HDS.

7. Turn the IMA battery module switch OFF (see page 12-4).

8. Set the parking brake, then with the shift lever in N or P, turn the ignition switch to START (III).

   Does the starter crank the engine normally?

   YES—The starting system is OK. Go to step 33.

   NO—Go to step 9.

9. Turn the ignition switch to LOCK (0).

10. Check the 12 V battery condition (see page 22-61). Check electrical connections at the battery, the negative battery cable to body, the engine ground cables, and the starter for looseness and corrosion. Then try starting the engine again.

    Does the starter crank the engine?

    YES—Repairing the loose connection corrected the problem. The starting system is OK. Go to step 33.

    NO—Based on the following symptoms, take the appropriate action:■

    - If the starter does not crank the engine at all, go to step 11.
    - If the starter cranks the engine erratically or too slowly, go to step 31.
    - If the starter does not disengage from the flywheel ring gear when you release the key, replace the starter, or remove and disassemble it, and check for the following:
      - Starter solenoid and switch malfunction
      - Dirty drive gear or damaged overrunning clutch

(cont'd)

Starter System Circuit Troubleshooting (cont'd)

11. Remove the air cleaner assembly (see page 11-370).

12. Remove the intake air duct (see step 8 on page 5-3).

13. Make sure the shift lever is in N or P, and set the parking brake, then disconnect the S terminal connector (A) from the starter. Connect a jumper wire from the battery positive terminal to the S terminal.

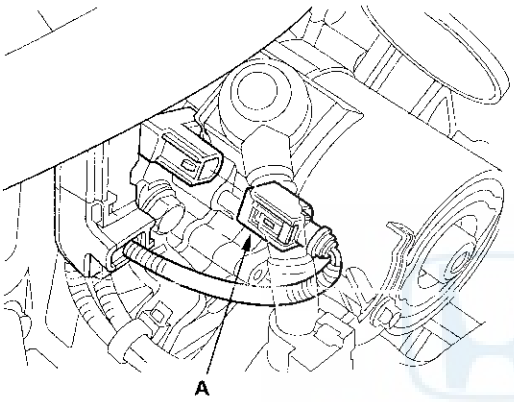

Does the starter crank the engine?

YES—Go to step 14.

NO—Remove the starter, and repair or replace it as necessary. ■

14. Check the No. 23 (7.5 A) fuse in the under-dash fuse/relay box.

Is the fuse OK?

YES—Reinstall the No. 23 (7.5 A) fuse in the under-dash fuse/relay box. Go to step 15.

NO—Replace the fuse. If the fuse continues to blow, locate and repair the short in the circuit between the under-dash fuse/relay box and the PCM. ■

15. Remove the starter cut relay from the under-dash fuse/relay box, and test it (see page 22-64).

Is the relay OK?

YES—Go to step 16.

NO—Replace the starter cut relay. ■

16. Check the ignition switch (see page 22-66).

Is the ignition switch OK?

YES—Go to step 17.

NO—Replace the ignition switch. ■

17. Measure the voltage between starter cut relay 4P socket terminal No. 2 and body ground with the ignition switch in START (III).

STARTER CUT RELAY 4P SOCKET

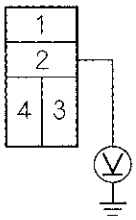

Terminal side of female terminals

Is there battery voltage?

YES—Go to step 18.

NO—Repair open in the wire between the under-dash fuse/relay box and the ignition switch. If the wire is OK, replace the under-dash fuse/relay box. ■

18. Turn the ignition switch to LOCK (0).

19. Check for continuity between starter cut relay 4P socket terminal No. 1 and body ground.

STARTER CUT RELAY 4P SOCKET

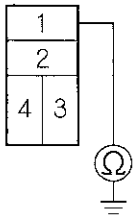

Terminal side of female terminals

Is there continuity?

YES—Repair short to ground in the wire between the under-dash fuse/relay box and the starter. ■

NO—Go to step 20.

20. Connect the S terminal connector to the S terminal.

21. Connect the starter cut relay 4P socket terminals No. 1 and No. 2 with a jumper wire, and turn the ignition switch to START (III).

STARTER CUT RELAY 4P SOCKET

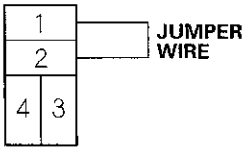

Terminal side of female terminals

Does the starter crank the engine?

YES—Go to step 22.

NO—Repair open in the wire between the under-dash fuse/relay box and the starter. ■

22. Turn the ignition switch to LOCK (0).

23. Remove the jumper wire.

24. Measure the voltage between starter cut relay 4P socket terminal No. 3 and body ground with the ignition switch in START (III).

STARTER CUT RELAY 4P SOCKET

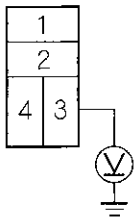

Terminal side of female terminals

Is there battery voltage?

YES—Go to step 25.

NO—Replace the under-dash fuse/relay box. ■

25. Turn the ignition switch to LOCK (0).

26. Reinstall the starter cut relay.

27. Turn the ignition switch to ON (II), and jump the SCS line with the HDS, then turn the ignition switch to LOCK (0).

    NOTE: This must be done to protect the PCM from damage.

28. Disconnect PCM connector A (44P).

(cont'd)

Starter System Circuit Troubleshooting (cont'd)

29. Measure the voltage between PCM connector terminal A12 and body ground with the ignition switch in START (III).

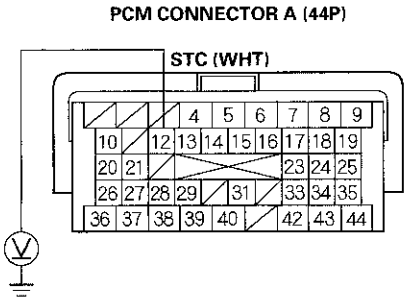

Terminal side of female terminals

Is there battery voltage?

YES—Go to step 30.

NO—Repair open in the wire between the under-dash fuse/relay box and PCM connector terminal A12. If the wire is OK, replace the under-dash fuse/relay box.■

30. Measure the voltage between PCM connector terminal A7 and body ground with the ignition switch in START (III).

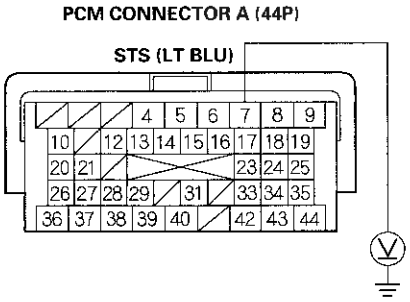

Terminal side of female terminals

Is there battery voltage?

YES—Update the PCM if it does not have the latest software (see page 11-236), or substitute a known-good PCM (see page 11-7), then recheck. If the symptom/indication goes away with a known-good PCM, replace the original PCM (see page 11-238).■

NO—Repair open in the wire between the under-dash fuse/relay box and PCM connector terminal A7.■

31. Do the STARTING TEST with the alternator, regulator, battery & starter tester.

NOTE: The probe is used for starter testing.

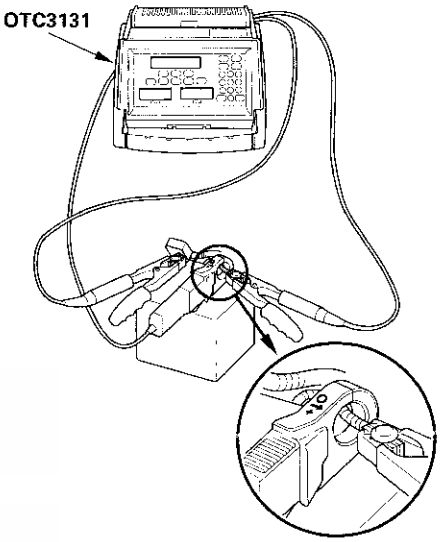

Does the display indicate cranking voltage greater than or equal to 8.5 V and is the current draw less than or equal to 350 A?

YES—Go to step 32.

NO—Replace the starter, or remove and disassemble it, and check for these problems:■

- Drag in the starter armature
- Shorted armature winding
- Excessive drag in the engine
- Open circuit in starter armature commutator segments
- Excessively worn starter brushes
- Open circuit in the starter brushes
- Dirty or damaged helical splines or drive gear
- Faulty overrunning clutch

32. Remove the starter, and inspect its drive gear and the flywheel ring gear for damage. Replace any damaged parts.

33. Select PCM reset (see page 11-4) in the PGM-FI INSPECTION menu to cancel ALL INJECTORS STOP with the HDS.

34. Turn the IMA battery module switch ON (see page 12-4).

35. If the IMA battery level gauge (BAT) displays no segment, start the engine, and hold it between 3,500 rpm and 4,000 rpm without load (in N or P) until the BAT displays at least three segments.

36. Do the start clutch pressure control calibration procedures (see page 14-172).

Starter Performance Test

1. Disconnect the S terminal connector from the starter.

2. Make the connection for this test using the thickest (gauge) wire possible (preferably the same gauge as used on the vehicle).

   NOTE: To avoid damaging the starter, never leave the battery connected for more than 5 seconds.

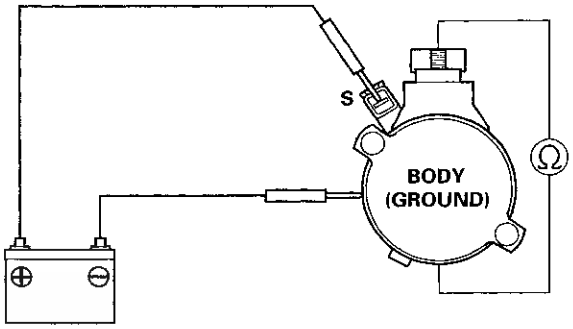

3. Connect the battery as shown, and check for continuity between the B terminal and the starter body. If there is continuity, it is working properly.

4. Disconnect the battery from the starter body as shown, and check for continuity between the B terminal and the starter body. If there is no continuity, it is working properly.

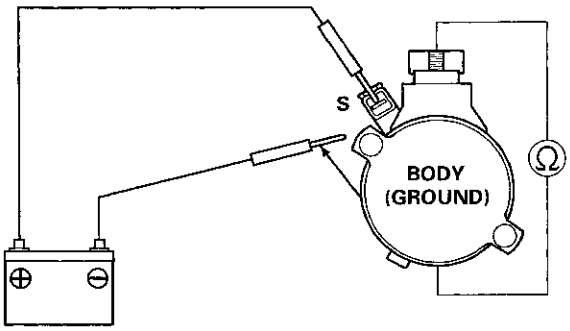

(cont'd)

Starter Performance Test (cont'd)

5. Remove the starter (see page 4-10).
6. Clamp the starter firmly in a vise.
7. Connect the starter to the battery as shown, and confirm that the motor runs.

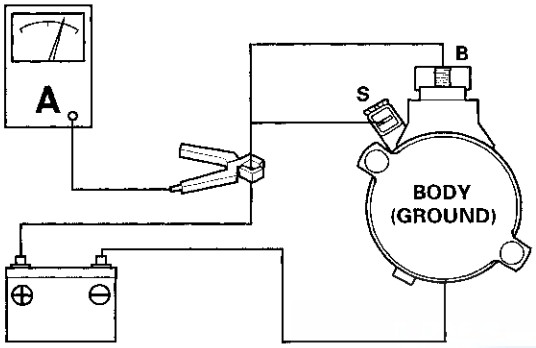

8. If the electric current meets the specification when the battery voltage is at 11.5 V, the starter is working properly.

Specification
Electric Current: 80 A or less

Starter Removal and Installation

Removal

1. Do the battery removal procedure (see page 22-63).
2. Remove the air cleaner assembly (see page 11-370).
3. Remove the intake air duct (see step 8 on page 5-3).
4. Disconnect the positive starter cable (A) and the S terminal connector (B) from the starter, and remove the upper radiator hose bracket (C).

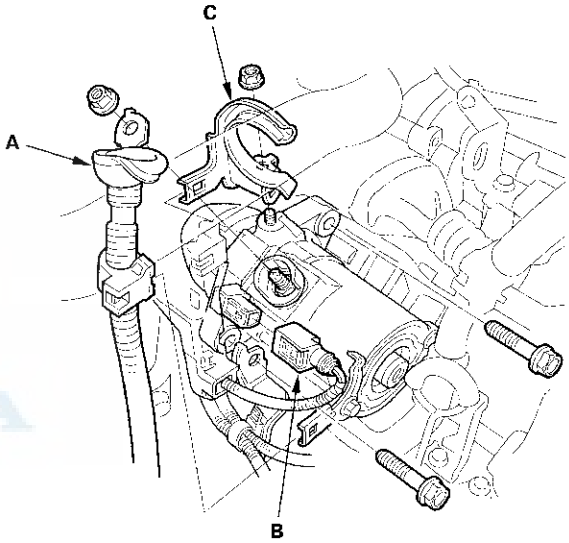

5. Remove the two bolts holding the starter, then remove the starter.

Installation

1. Install the starter, then tighten the mounting bolts.

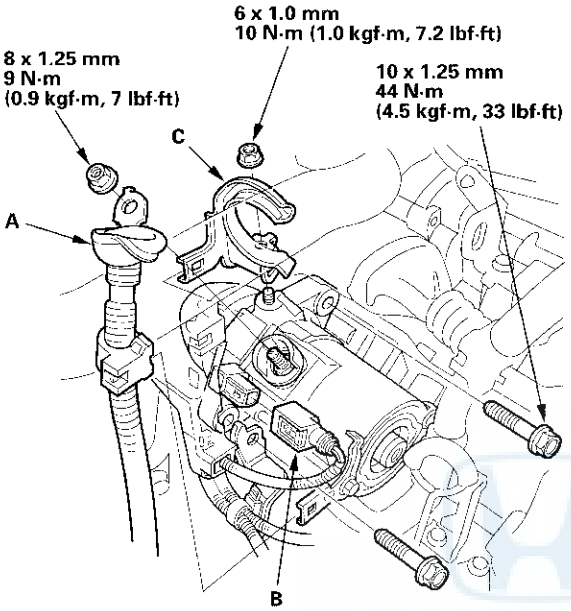

2. Connect the positive starter cable (A) and the S terminal connector (B) to the starter, and install the upper radiator hose bracket (C). Make sure the crimped side of the ring terminal faces away from the starter when you connect it.
3. Install the intake air duct (see step 51 on page 5-20).
4. Install the air cleaner assembly (see page 11-370).
5. Do the battery installation procedure (see page 22-63).
6. Turn the IMA battery module switch OFF (see page 12-4).
7. Start the engine to make sure the starter works properly.
8. Turn the IMA battery module switch ON (see page 12-4).
9. If the IMA battery level gauge (BAT) displays no segments, start the engine, and hold it between 3,500 rpm and 4,000 rpm without load (in N or P) until the BAT displays at least three segments.

Starter Overhaul

Disassembly/Reassembly

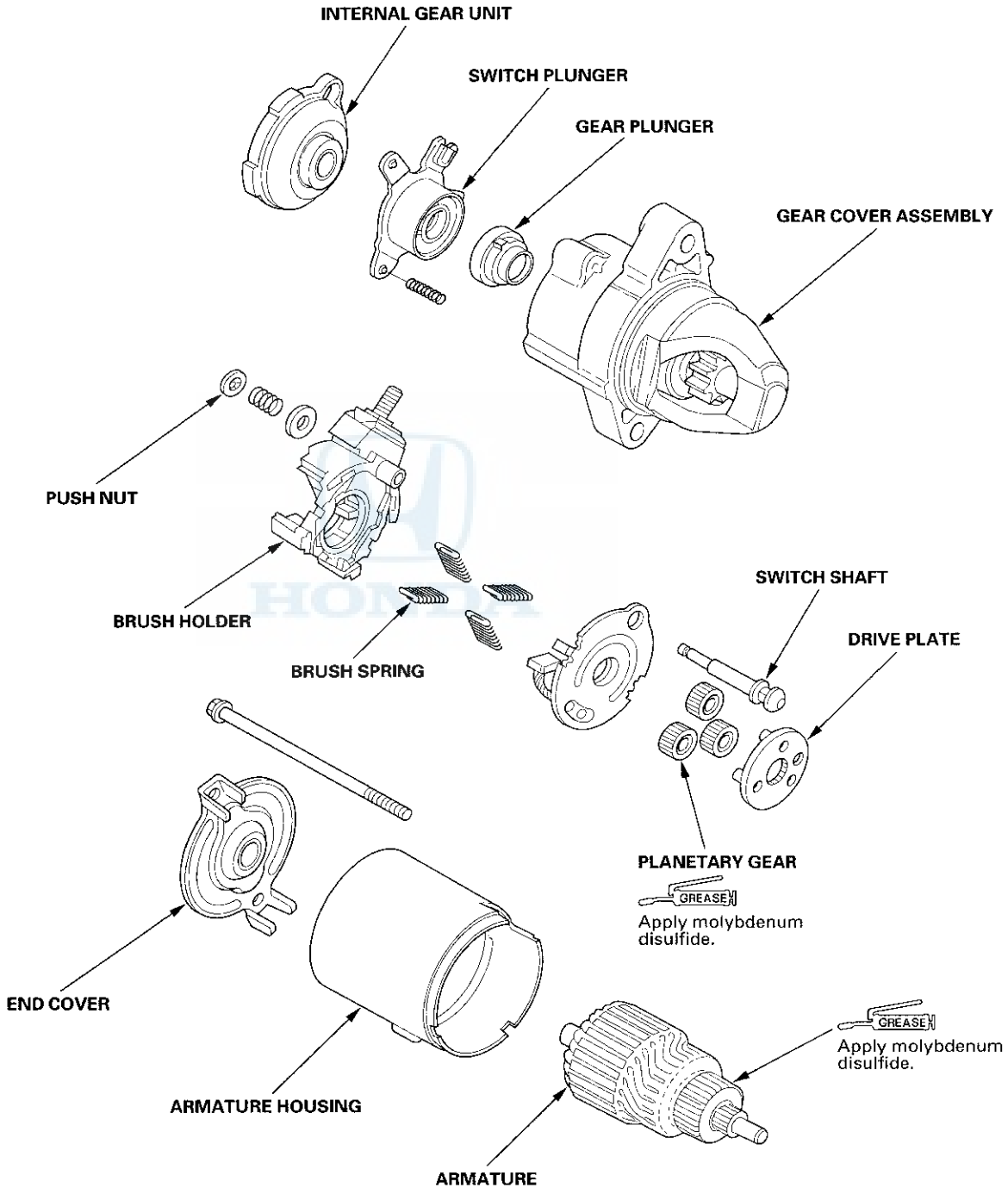

Armature Inspection and Test

1. Remove the starter (see page 4-10).

2. Disassemble the starter as shown at the beginning of this procedure.

3. Inspect the armature for wear or damage from contact with the permanent magnet. If there is wear or damage, replace the armature.

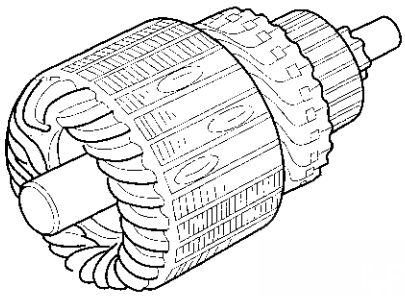

4. Check the commutator (A) surface. If the surface is dirty or burnt, resurface it with an emery cloth or a lathe to the specifications in step 5, or recondition with #500 or #600 sandpaper (B).

   NOTE: Use plastic protectors on vice jaws to prevent damaging the armature.

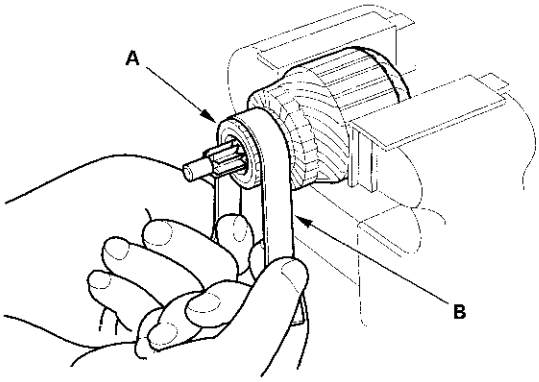

5. Check the commutator diameter. If the diameter is below the service limit, replace the armature.

   Commutator Diameter
   Standard (New): 28.0—28.1 mm (1.102—1.106 in.)
   Service Limit: 27.5 mm (1.083 in.)

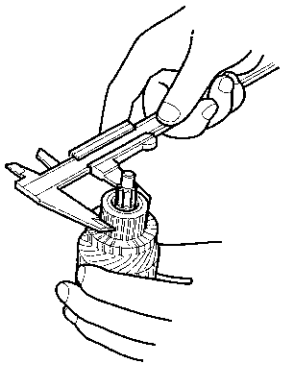

6. Measure the commutator (A) runout.

   - If the commutator runout is within the service limit, check the commutator for carbon dust or brass chips between the segments.
   - If the commutator runout is not within the service limit, replace the armature.

   Commutator Runout
   Standard (New): 0.02 mm (0.001 in.) max.
   Service Limit: 0.05 mm (0.002 in.)

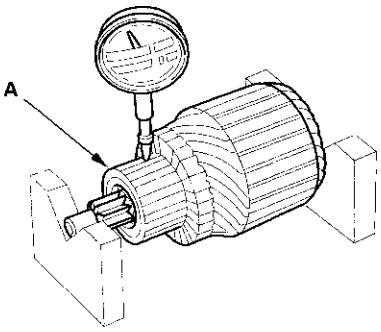

(cont'd)

Starter Overhaul (cont'd)

7. Check the mica depth (A). If the mica is too high (B), undercut the mica with a hacksaw blade to the proper depth. Cut away all the mica (C) between the commutator segments. The undercut should not be too shallow, too narrow, or V-shaped (D).

   Commutator Mica Depth
   Standard (New): 0.40—0.50 mm (0.016—0.020 in.)
   Service Limit: 0.15 mm (0.006 in.)

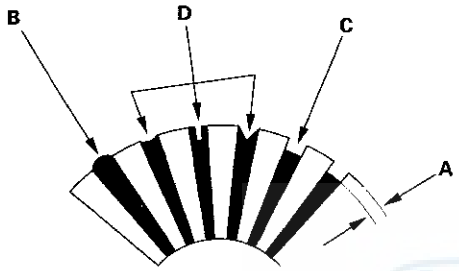

8. Use an ohmmeter to check for continuity between the segments of the commutator. If there is an open circuit between any segments, replace the armature.

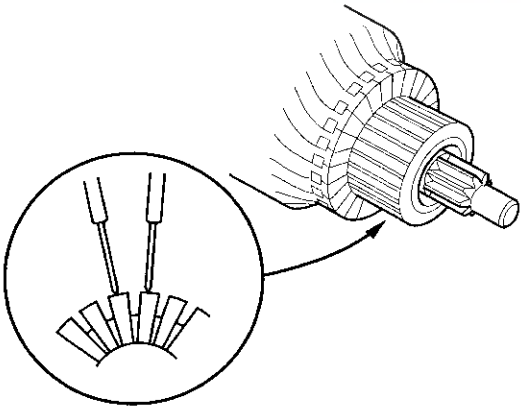

9. Place the armature (A) on an armature tester (B). Hold a hacksaw blade (C) on the armature core. If the blade is attracted to the core or vibrates while the core is turned, the armature is shorted. Replace the armature.

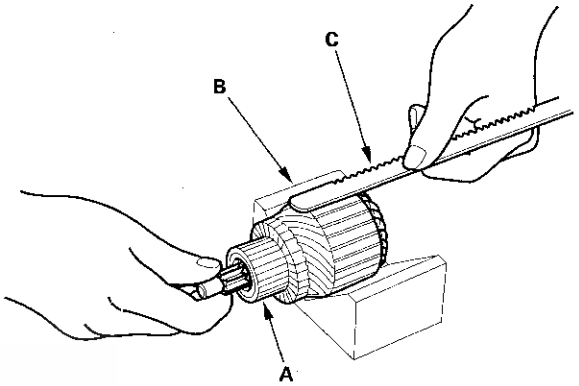

10. Use an ohmmeter to check for continuity between the commutator (A) and the armature coil core (B), and between the commutator and the armature shaft (C). If there is continuity, replace the armature.

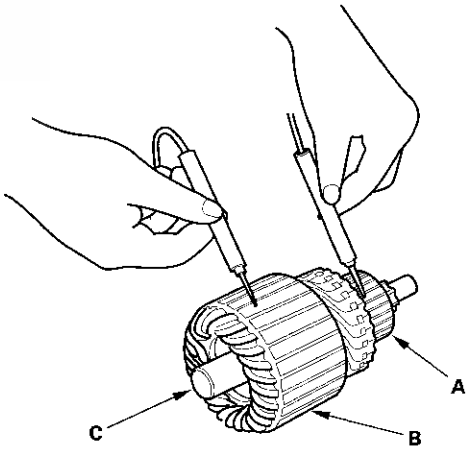

Starter Brush Inspection

11. Measure the brush length. If it is not within the service limit, replace the brush holder assembly.

    Brush Length
    Standard (New): 11.1—11.5 mm (0.44—0.45 in.)
    Service Limit: 4.3 mm (0.17 in.)

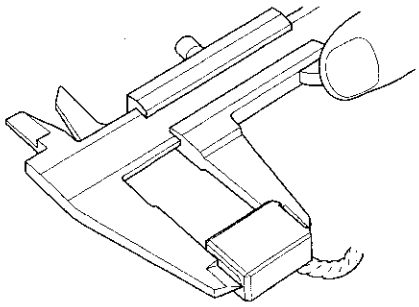

Starter Brush Holder Test

12. Check for continuity between the (+) brushes (A) and the (−) brushes (B). If there is continuity, replace the brush holder assembly.

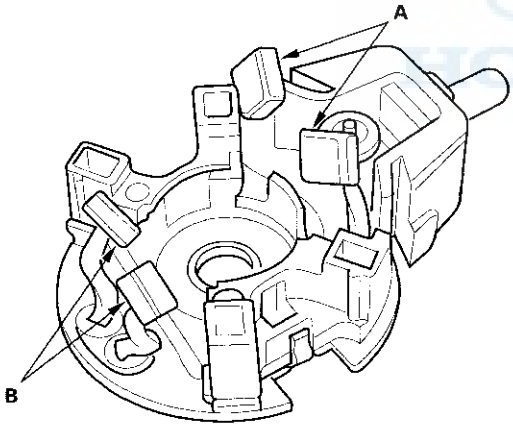

Planetary Gear Inspection

13. Check the planetary gears (A) and the internal ring gear (B). Replace them if they are worn or damaged.

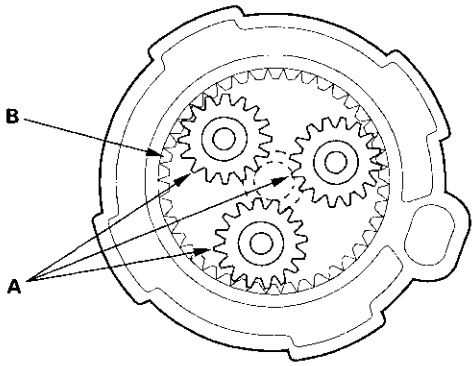

(cont'd)

Starter Overhaul (cont'd)

Overrunning Clutch Inspection

14. Holding the drive gear (A), turn the gear shaft (B) clockwise. Check that the drive gear comes out to the other end. If the drive gear does not move smoothly, replace the gear cover assembly.

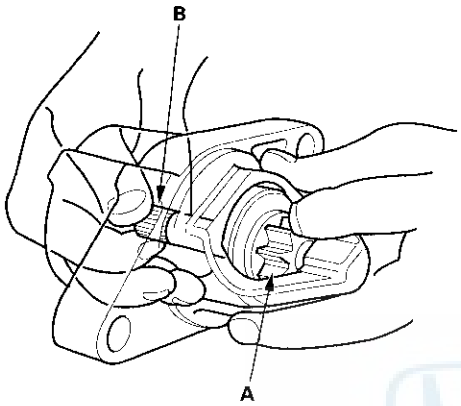

15. Holding the drive gear, turn the gear shaft counterclockwise. The gear shaft should rotate freely. If the gear shaft does not rotate smoothly, replace the gear cover assembly.

16. If the drive gear is worn or damaged, replace the overrunning clutch assembly; the gear is not available separately. Check the condition of the flywheel ring gear. Replace it if the starter drive gear teeth are damaged.

Starter Reassembly

17. Install the brush into the brush holder, and set the armature (A) in the brush holder (B).

    NOTE: To seat the new brushes, slip a strip of #500 or #600 sandpaper, with the grit side up, between the commutator and the each brush, and smoothly rotate the armature. The contact surface of the brushes will be sanded to the same contour as the commutator.

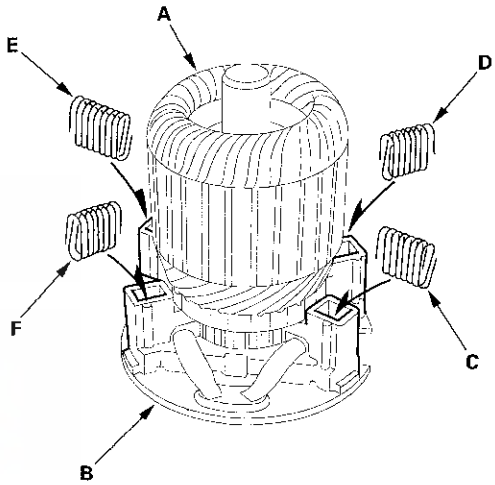

18. While squeezing a spring (C), insert it in the hole on the brush holder, and push it until it bottoms. Repeat this for the other three springs (D, E, and F).

19. Install the armature and the brush holder assembly into the housing.

    NOTE: Make sure the armature stays in the holder.

Component Location Index

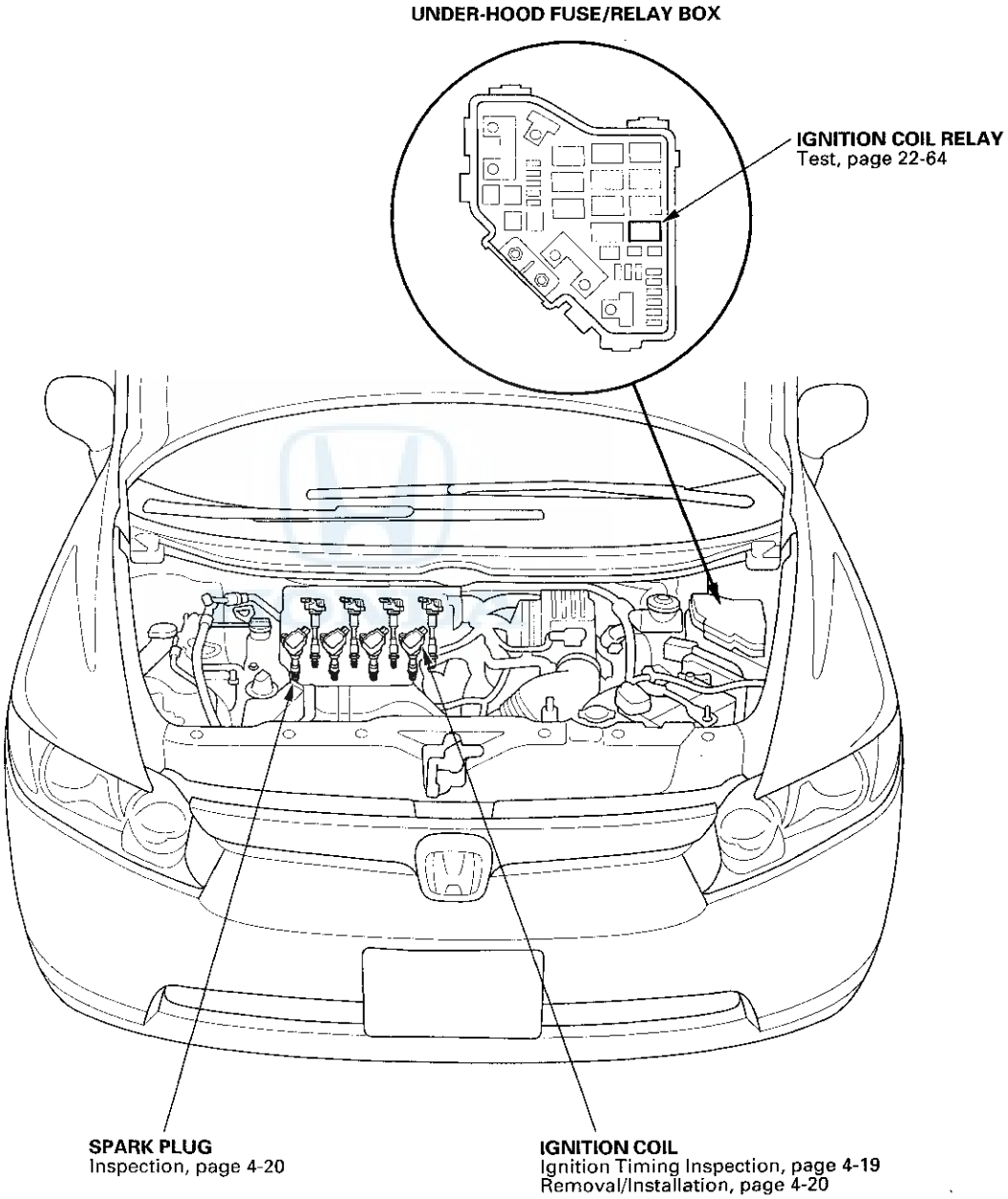

Circuit Diagram

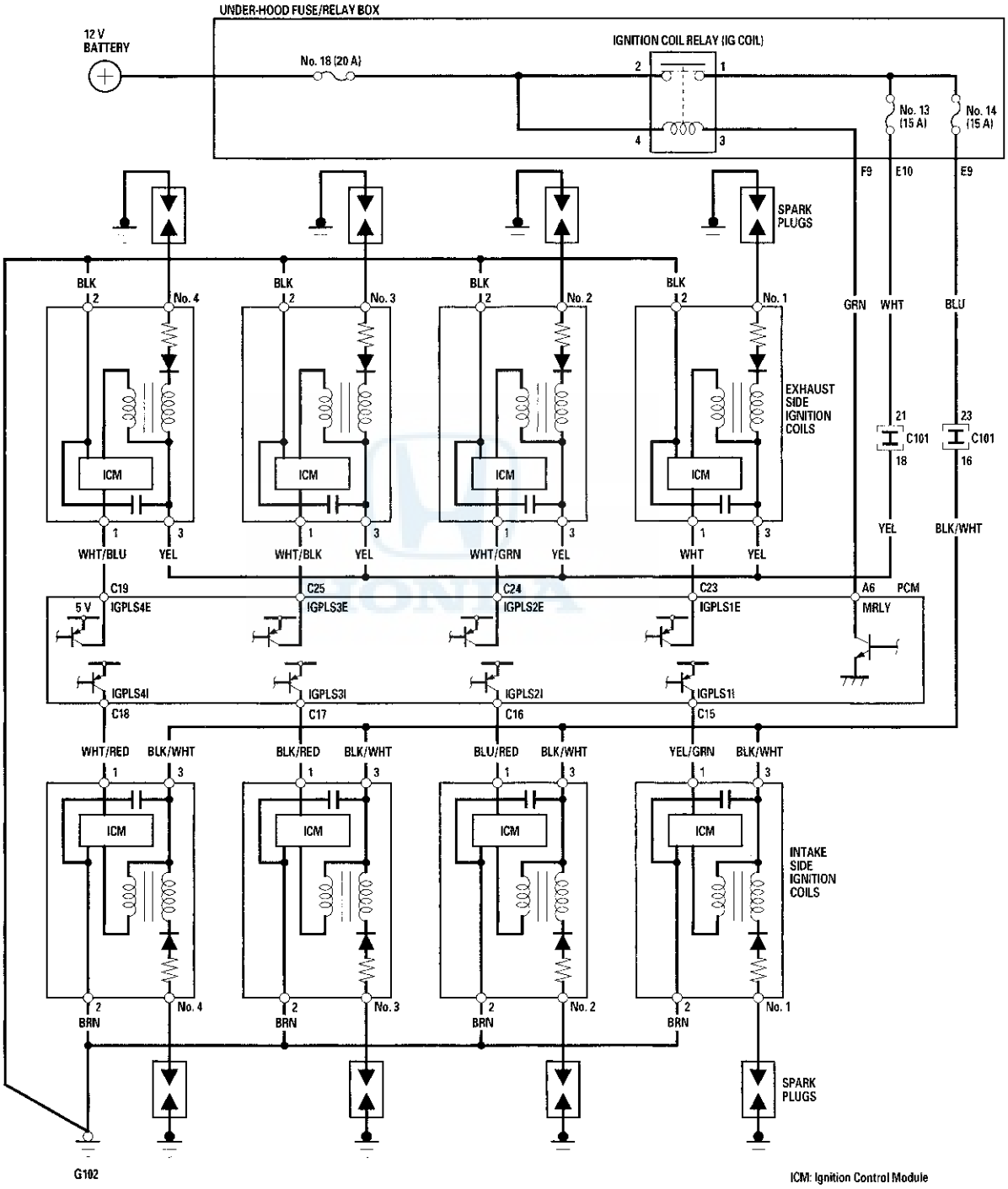

Ignition Timing Inspection

1. Connect the Honda Diagnostic System (HDS) to the data link connector (DLC) (see step 2 on page 11-3).

2. Turn the ignition switch to ON (II).

3. Make sure the HDS communicates with the vehicle and the powertrain control module (PCM). If it does not communicate, troubleshoot the DLC circuit (see page 11-213).

4. Check for DTCs (see page 11-3). If a DTC is present, diagnose and repair the cause before continuing with this test.

5. Start the engine. Hold the engine speed at 3,000 rpm with no load (in N or P) until the radiator fan comes on, then let it idle.

6. Check the idle speed (see page 11-332).

7. Jump the SCS line with the HDS.

8. Connect the timing light to the exhaust side No. 1 ignition coil harness.

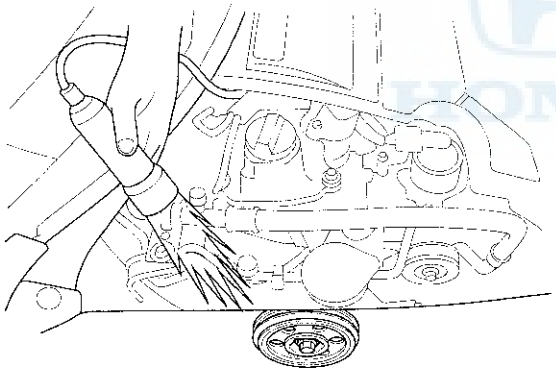

9. Aim the light toward the pointer (A) on the cam chain case. Check the ignition timing under a no load condition (headlights, blower fan, rear window defogger, and air conditioner are turned off).

Ignition Timing
10±2 °BTDC (RED mark (B)) at idle in N or P

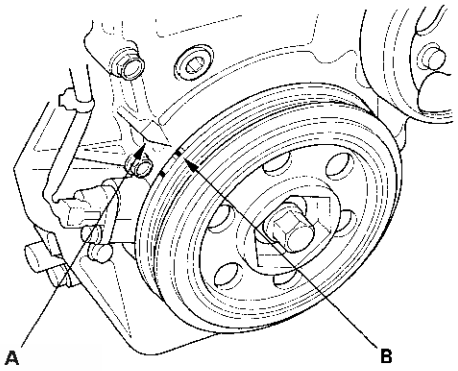

10. If the ignition timing differs from the specification, check the cam timing. If the cam timing is OK, update the PCM if it does not have the latest software (see page 11-236), or substitute a known-good PCM (see page 11-7), then recheck. If the system works properly, and the PCM was substituted, replace the original PCM (see page 11-238).

11. Disconnect the HDS and the timing light.

Ignition Coil Removal/Installation

1. Remove the engine cover (see step 6 on page 5-3).

2. Disconnect the ignition coil connectors, then remove the intake side ignition coils (A) and the exhaust side ignition coils (B).

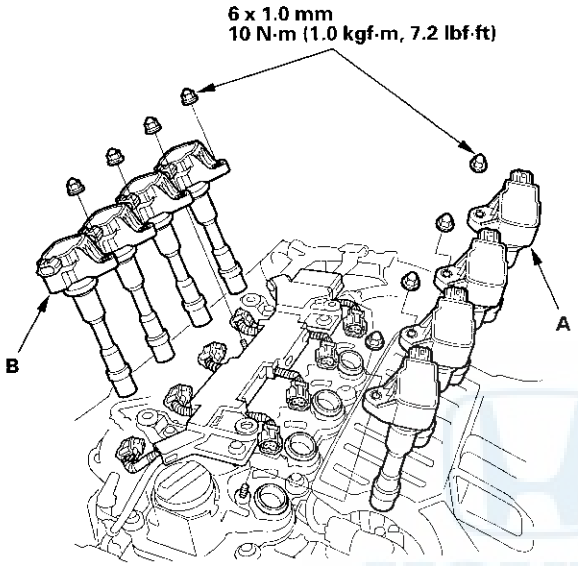

3. Install the ignition coils in the reverse order of removal.

Spark Plug Inspection

1. Remove the spark plugs, then inspect the electrodes and the ceramic insulator.

   - Burned or worn electrodes may be caused by these conditions:
     - Advanced ignition timing
     - Loose spark plug
     - Plug heat range too hot
     - Insufficient cooling

   - Fouled plugs may be caused by these conditions:
     - Retarded ignition timing
     - Oil in combustion chamber
     - Incorrect spark plug gap
     - Plug heat range too cold
     - Excessive idling/low speed running
     - Clogged air cleaner element
     - Deteriorated ignition coils

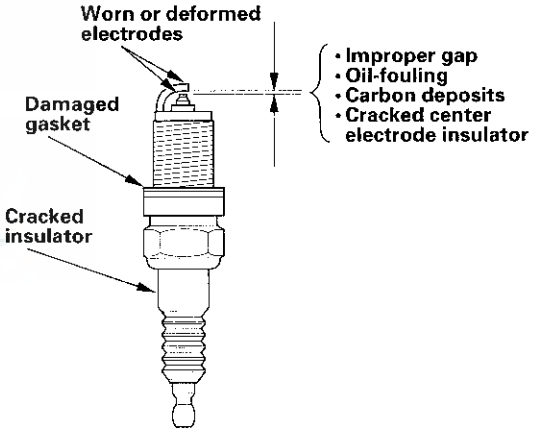

2. If the spark plug electrode is dirty or contaminated, clean the electrode with a plug cleaner.

   NOTE:
   - Do not use a wire brush or scrape the iridium electrode since this will damage the electrode.
   - When using a sandblaster spark plug cleaner, do not clean for more than 20 seconds to avoid damaging the electrode.

3. Do not adjust the gap of iridium tip plugs (A); replace the spark plug if the gap is out of specification.

   Electrode Gap
   Standard (New): 1.0—1.1 mm (0.039—0.043 in.)

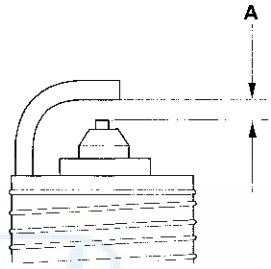

4. Replace the plug at the specified interval or if the center electrode is rounded (A). Use only the spark plugs listed.

   Spark Plugs: **ILFR6J-11K (NGK)**
   SK20HPR-L11 (DENSO)

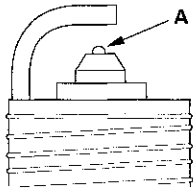

5. Apply a small amount of anti-seize compound to the plug threads, and screw the plugs into the cylinder head, finger-tight. Torque them to 18 N·m (1.8 kgf·m, 13 lbf·ft).

Component Location Index

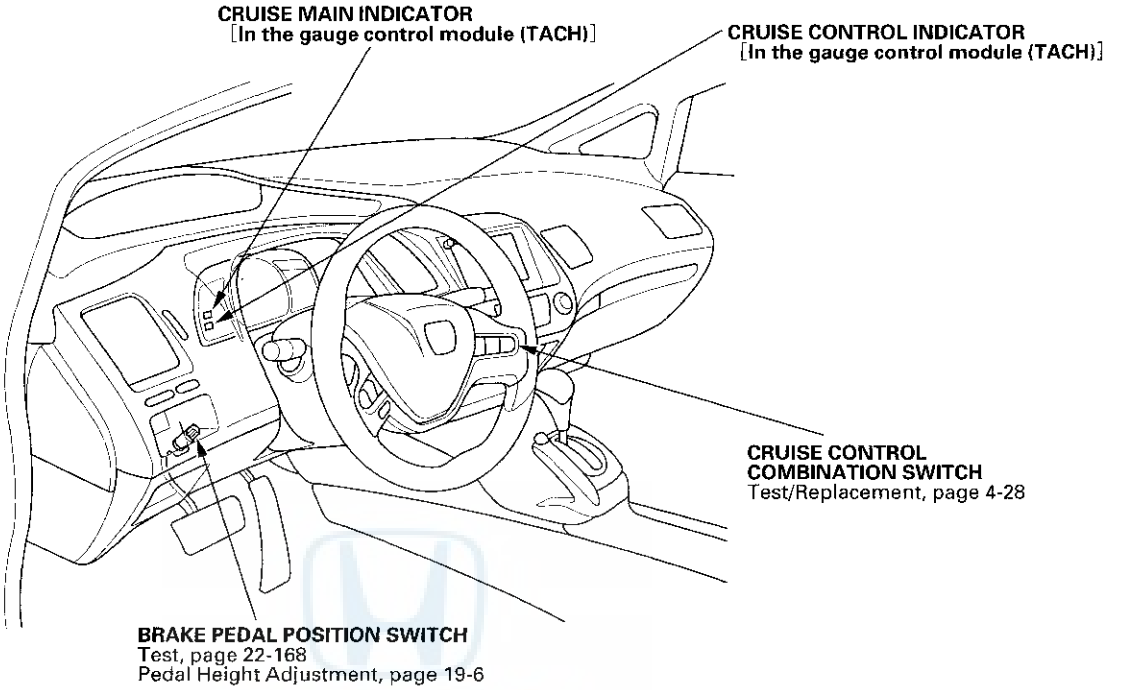

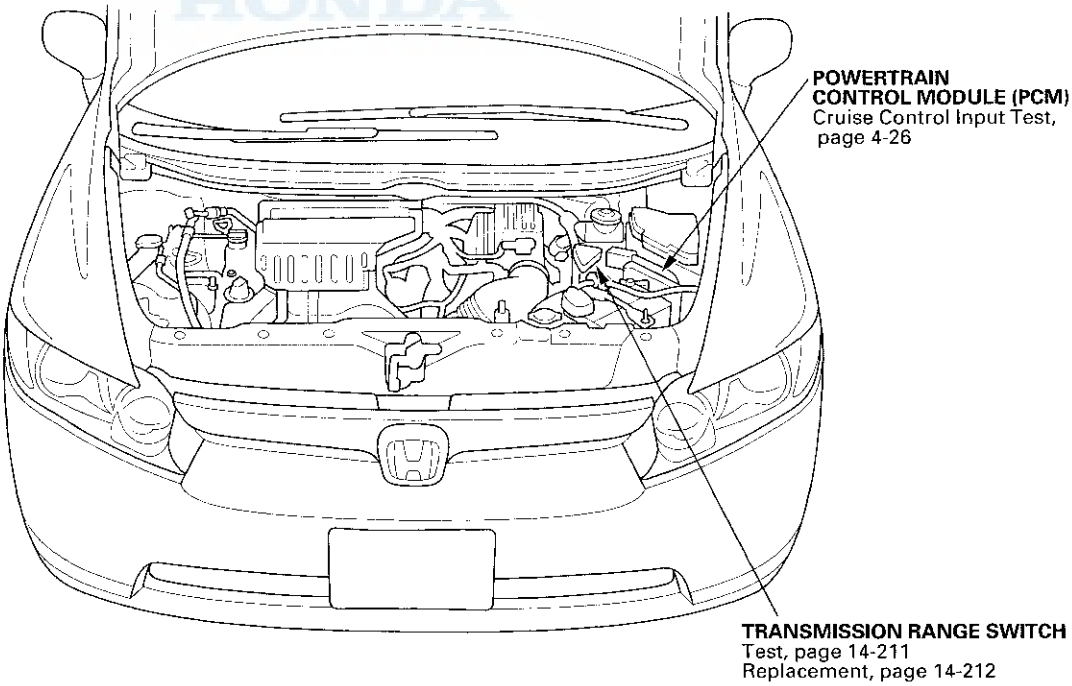

Symptom Troubleshooting Index

Symptom	Diagnostic procedure	Also check for
Cruise control cannot be set	1. Check for PGM-FI DTCs (see page 11-3) and body DTCs (see page 22-6). 2. Check the No. 12 (15 A) fuse in the under-hood fuse/relay box, and the No. 3 (10 A) fuse in the under-dash fuse/relay box. 3. Do the cruise control input test (see page 4-26). 4. Do the cruise control combination switch test (see page 4-28).	
Cruise control can be set, but the cruise main indicator does not come on	1. Check for PGM-FI DTCs (see page 11-3) and body DTCs (see page 22-6). 2. Do the gauge control module (TACH) self-diagnostic function procedure (see page 22-223). 3. Do the cruise control input test (see page 4-26). 4. Test the cruise control main switch signal input.	Faulty gauge control module (TACH)
Cruise control can be set, but the cruise control indicator does not come on	1. Check for PGM-FI DTCs (see page 11-3) and body DTCs (see page 22-6). 2. Do the gauge control module (TACH) self-diagnostic function procedure (see page 22-223). 3. Do the cruise control input test (see page 4-26). Test the cruise control indicator signal input.	Faulty gauge control module (TACH)
Vehicle does not accelerate accordingly when the resume/accel button is pressed	1. Check for PGM-FI DTCs (see page 11-3) and body DTCs (see page 22-6). 2. Do the cruise control input test (see page 4-26). Test the cruise control resume/accel switch signal input. 3. Do the cruise control combination switch test (see page 4-28).	Open circuit, loose or disconnected terminal: ORN
Set speed does not cancel when the brake pedal is pressed	1. Check for PGM-FI DTCs (see page 11-3) and body DTCs (see page 22-6). 2. Do the cruise control input test (see page 4-26). Test the brake pedal position switch signal input. 3. Do the brake pedal position switch test (see page 22-168).	• Short to power on the BRN wire • Faulty brake pedal position switch
Set speed does not cancel when the cruise control main button is pressed	1. Check for PGM-FI DTCs (see page 11-3) and body DTCs (see page 22-6). 2. Do the cruise control input test (see page 4-26). Test the cruise control main switch signal input. 3. Do the cruise control combination switch test (see page 4-28).	Short to ground on the YEL wire
Set speed does not cancel when the cancel button is pressed	1. Check for PGM-FI DTCs (see page 11-3) and body DTCs (see page 22-6). 2. Do the cruise control input test (see page 4-26). Test the cruise control cancel switch signal input. 3. Do the cruise control combination switch test (see page 4-28).	Open circuit, loose or disconnected terminals: LT GRN or ORN

(cont'd)

Symptom Troubleshooting Index (cont'd)

Symptom	Diagnostic procedure	Also check for
Set speed does not resume when the resume/accel button is pressed (with the cruise control main button pressed on, and set speed temporarily canceled by pressing the brake pedal)	1. Check for PGM-FI DTCs (see page 11-3) and body DTCs (see page 22-6). 2. Check the brake pedal position switch adjustment (see page 19-6). 3. Do the cruise control input test (see page 4-26). Test the cruise control resume/accel switch signal input. Test the brake pedal position switch signal input. 4. Do the cruise control combination switch test (see page 4-28).	• Faulty brake pedal position switch • Open circuit, loose or disconnected terminals: ORN wire

Circuit Diagram

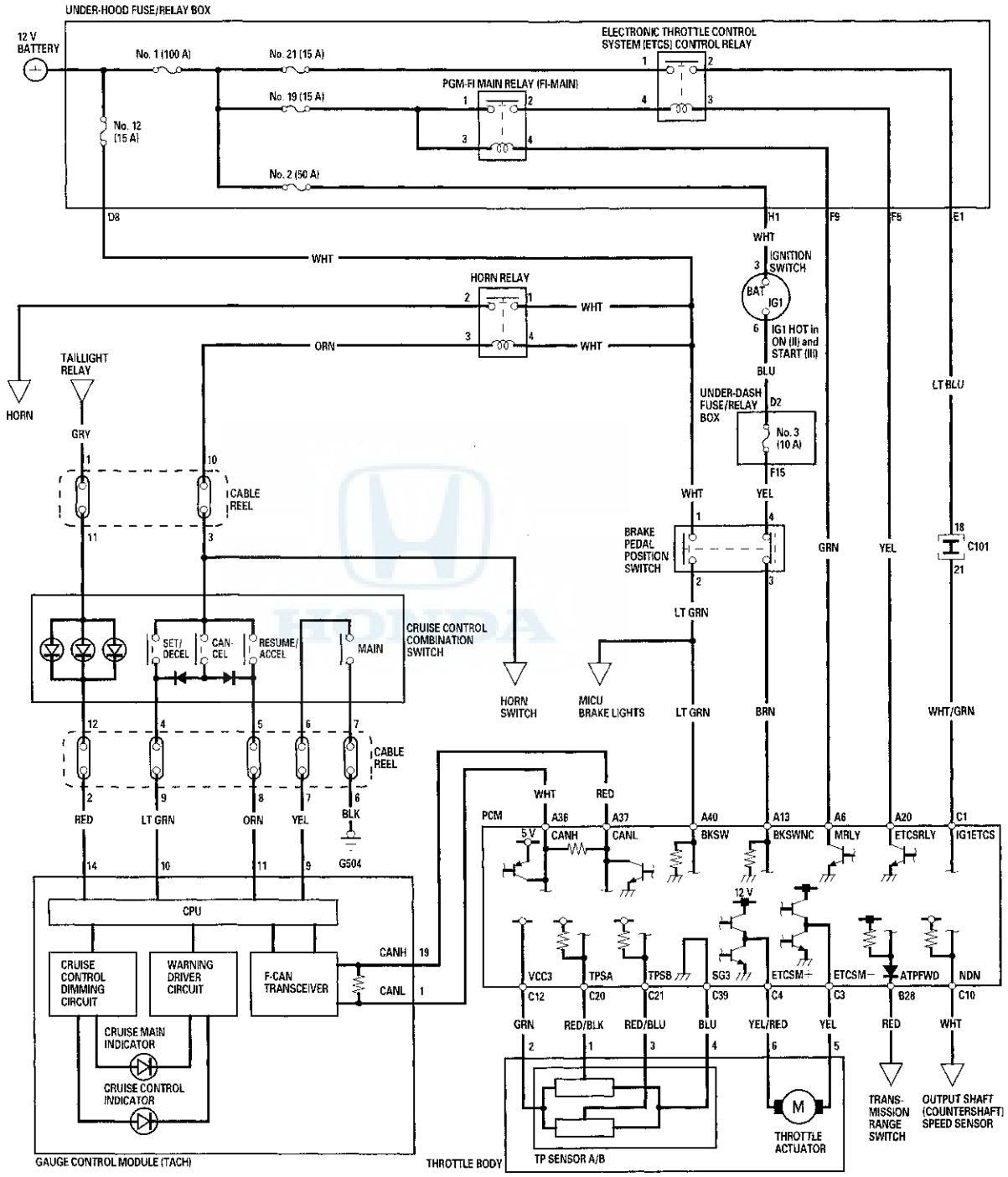

Cruise Control Input Test

NOTE: Always make sure that you have the latest Honda Diagnostic System (HDS) software.

1. Connect the HDS to the data link connector (DLC) (see step 2 on page 11-3).
2. Turn the ignition switch to ON (II).
3. Make sure the HDS communicates with the vehicle and the powertrain control module (PCM). If it does not communicate, troubleshoot the DLC circuit (see page 11-213).
4. Go to PGM-FI, and check for DTCs (see page 11-3).
5. Do the following tests while monitoring parameters in the PGM-FI DATA LIST with the HDS.

   NOTE: Intermittent failures are often caused by loose circuit connections. While monitoring cruise control inputs, flex the circuit wires, and note if any of the test results change.

Signal to be tested	Test condition	Parameter: Desired result	Possible cause if result is not obtained
Brake pedal position switch signal	Brake pedal pressed, then released	CRUISE BRAKE SW should indicate OFF when the brake pedal is pressed and ON when the brake pedal is released.	• Faulty brake pedal position switch • Blown No. 3 (10 A) fuse in the under-dash fuse/relay box • An open in the wire between the PCM and the brake pedal position switch • A wire shorted to ground between the PCM and the brake pedal position switch
Transmission range switch signal	Shift lever in D and S	SHIFT/CLUTCH SW should indicate ON in P, R, N, and L and OFF in D and S.	• Faulty transmission range switch • An open in the wire between the PCM and the transmission range switch • A wire shorted to ground between the PCM and the transmission range switch
Cruise control main switch signal	Cruise control main button pressed and released	CRUISE MASTER (MAIN) SW should indicate ON when the cruise control main button is pressed and OFF when the cruise control main button is released.	• Faulty cruise control main switch • An open in the wire between the gauge control module (TACH) and the cruise control main switch • A wire shorted to ground between the gauge control module (TACH) and the cruise control main switch
Set switch signal	Set/decel button pressed and released	CRUISE SET SW should indicate ON when the set/decel button is pressed and OFF when the set/decel button is released.	• Faulty cruise control combination switch • An open in the wire between the gauge control module (TACH) and the cruise control combination switch • A wire shorted to ground between the gauge control module (TACH) and the cruise control combination switch

Signal to be tested	Test condition	Parameter: Desired result	Possible cause if result is not obtained
Resume switch signal	Resume/accel button pressed and released	CRUISE RESUME SW should indicate ON when the resume/accel button is pressed and OFF when the resume/accel button is released.	• Faulty cruise control combination switch • An open in the wire between the gauge control module (TACH) and the cruise control combination switch • A wire shorted to ground between the gauge control module (TACH) and the cruise control combination switch
Cancel switch signal	Cancel button pressed and released	CRUISE CANCEL SW should indicate ON when the cancel button is pressed and OFF when the cancel button is released.	• Faulty cruise control combination switch • An open in the wire between the gauge control module (TACH) and the cruise control combination switch • A wire shorted to ground between the gauge control module (TACH) and the cruise control combination switch
Cruise control indicator signal	Start the engine, press the cruise control main switch on, and drive the vehicle above 25 mph (40 km/h), with the cruise control set and cancel the cruise control.	CRUISE INDICATOR should indicate ON when the cruise control is set and OFF when the cruise control is canceled.	Faulty gauge control module (TACH)

HONDA

Cruise Control Combination Switch Test/Replacement

SRS components are located in this area. Review the SRS component locations (see page 24-11) and the precautions and procedures (see page 24-13) before doing repairs or service.

1. Remove the driver's airbag (see page 24-184).

2. Remove the steering wheel trim (see page 17-6).

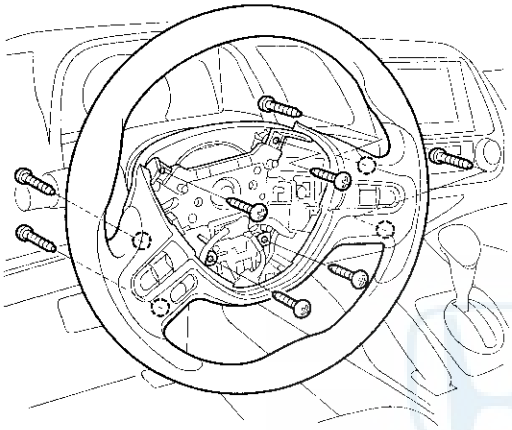

3. Remove the combination switch (A).

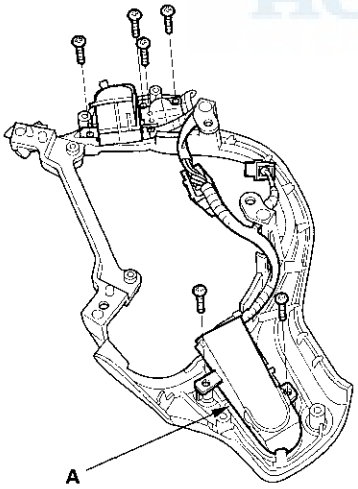

4. Check for continuity between the terminals in each cruise control combination switch position according to the table.

   - If there is continuity, and it matches the table, but the cruise control combination switch failure occurred on the cruise control input test, check and repair the wire harness on the switch circuit.
   - If there is no continuity in one or more positions, replace the switch.

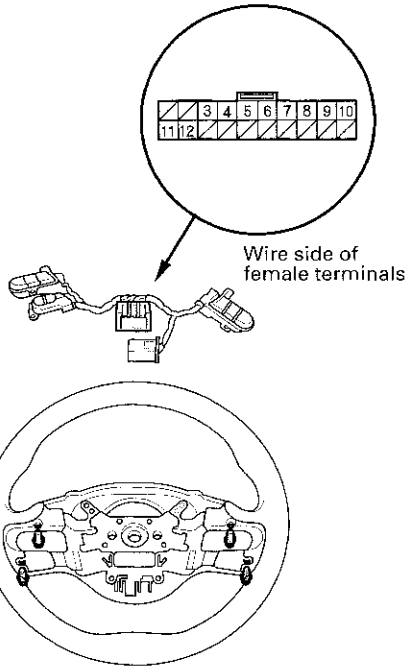

Position \ Terminal	6	7	3		4	5
Cruise control main switch (ON)	○	○				
Cruise control main switch (OFF)						
Set/decel (PRESSED)			○		○	
Resume/accel (PRESSED)			○			○
Cancel (PRESSED)			○	▶ ▶	○	○

SUPPLEMENTAL RESTRAINT SYSTEM (SRS) (If engine maintenance is required)

The Civic Hybrid SRS includes a driver's airbag in the steering wheel hub, a passenger's airbag in the dashboard above the glove box, seat belt tensioners in the front seat belt retractors, seat belt buckle tensioners in the front seat belt buckles, side curtain airbags in the sides of the roof, and side airbags in the front seat-backs. Information necessary to safely service the SRS is included in this Service Manual. Items marked with an asterisk (*) on the contents page include or are located near SRS components. Servicing, disassembling, or replacing these items requires special precautions and tools, and should be done by an authorized Honda dealer.

- To avoid rendering the SRS inoperative, which could lead to personal injury or death in the event of a severe frontal or side collision, all SRS service work should be done by an authorized Honda dealer.
- Improper service procedures, including incorrect removal and installation of the SRS, could lead to personal injury caused by unintentional deployment of the airbags, side airbags, and/or side curtain airbags.
- Do not bump or impact the SRS unit, front impact sensors, side impact sensors, or rear safing sensor when the ignition switch is in ON (II), or for at least 3 minutes after the ignition switch is turned to LOCK (0); otherwise, the system may fail in a collision, or the airbags may deploy.
- SRS electrical connectors are identified by yellow color coding. Related components are located in the steering column, front console, dashboard, dashboard lower panel, in the dashboard above the glove box, in the front seats, in the roof side, and around the floor. Do not use electrical test equipment on these circuits.

INTEGRATED MOTOR ASSIST (IMA) SYSTEM (If engine maintenance is required)

IMA components are located in this area. The IMA is a high-voltage system. The high voltage cables and their covers are identified by orange coloring. The safety labels are attached to high voltage and other related parts (see page 1-7). You must be familiar with the IMA system before working around it. Make sure you have read the Service Precautions in the IMA section before performing repairs or service (see page 12-3).

Engine Mechanical

Engine Assembly

Special Tools 5-2
Engine Removal 5-3
Engine Installation 5-12
Engine Mount Replacement 5-22

Cylinder Head 6-1

Engine Block 7-1

Engine Lubrication 8-1

Intake Manifold and Exhaust System 9-1

Engine Assembly

Special Tools

Ref. No.	Tool Number	Description	Qty
①	07AAK-SNAA120	Universal Lifting Eyelet	2

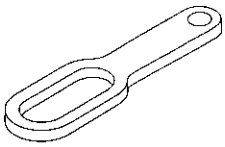

①

Engine Removal

Special Tools Required
- Universal lifting eyelet 07AAK-SNAA120
- Engine support hanger, A and Reds AAR-T1256 *
- 2006 Civic engine hanger VSB02C000025 *
- Front subframe adapter VSB02C000016 *

*: These special tools are available through Honda Tool and Equipment Program, 888-424-6857

NOTE:
- Use fender covers to avoid damaging painted surfaces.
- To avoid damaging wire and terminals, unplug the wiring connectors carefully while holding the connector portion.
- Mark all wiring and hoses to avoid misconnection. Also, be sure that they do not contact other wiring, hoses, or interfere with other parts.

1. Secure the hood in the wide open position (support rod in the lower hole).

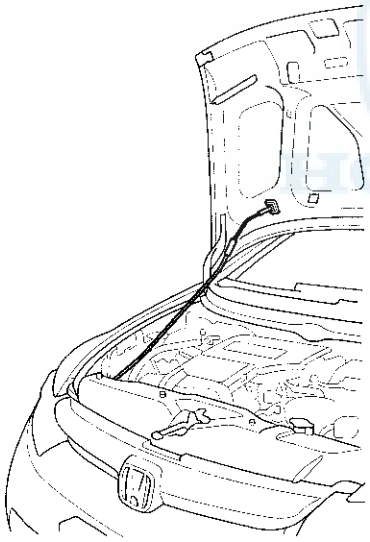

2. Do the battery removal procedure (see page 22-63).

3. Remove the cowl cover and the under-cowl panel (see page 20-140).

4. Turn the IMA battery module switch OFF (see page 12-4).

5. Relieve the fuel pressure, '06 model (see page 11-345), '07-09 models (see page 11-347).

6. Remove the engine cover.

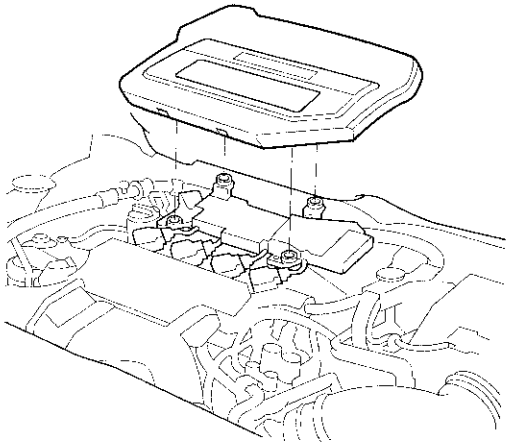

7. Remove the resonator (see page 11-371).

8. Remove the intake air duct.

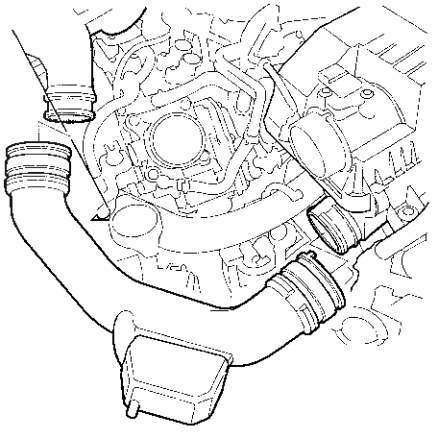

9. Remove the air cleaner assembly (see page 11-370).

(cont'd)

Engine Removal (cont'd)

10. Disconnect the positive starter cable (A), then remove the harness clamp (B) and the ground cable (C).

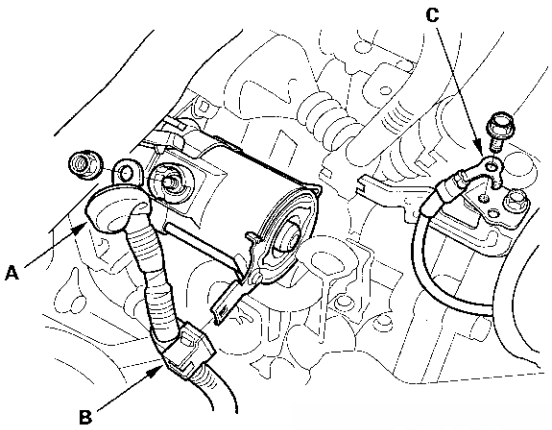

11. Remove the powertrain control module (PCM) cover (A), then remove the bolts (B).

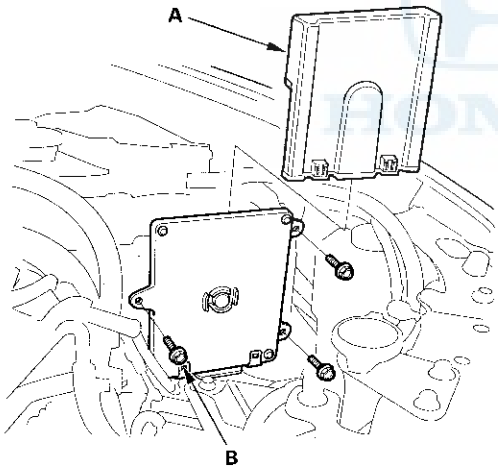

12. Disconnect the PCM connectors (A).

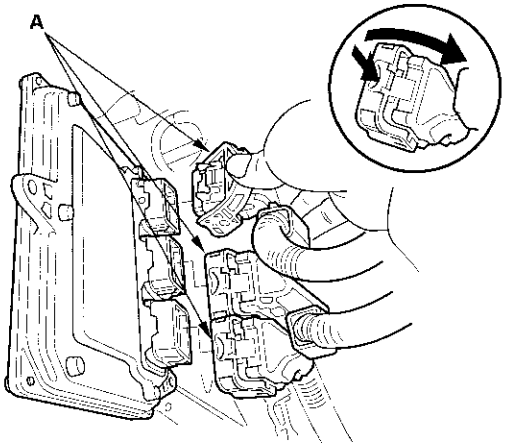

13. Disconnect the engine wire harness connectors (A), then remove the harness clamp (B) on the left side of the engine compartment.

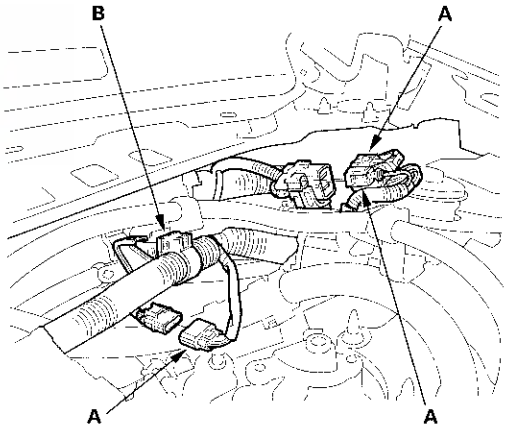

14. Disconnect the vacuum hose.

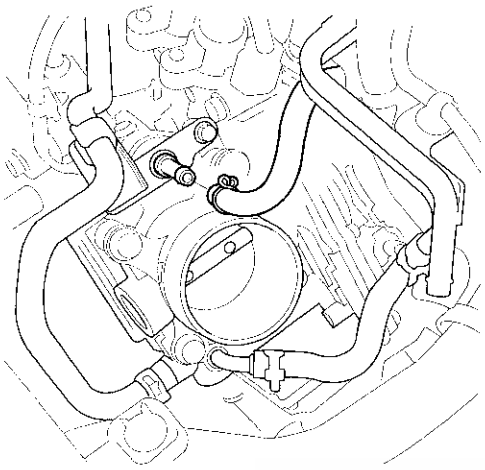

15. Disconnect the evaporative emission (EVAP) canister purge valve connector (A), then remove the harness clamp (B).

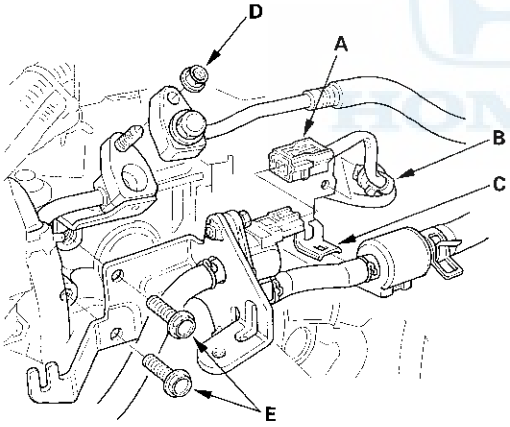

16. Disconnect the purge joint from the bracket (C), then remove the fuel pipe nut (D) and the EVAP canister purge valve bracket bolts (E).

17. Remove the drive belt (see page 10-10).

18. Wait until the engine is cool, then carefully remove the radiator cap.

19. Raise the vehicle on the lift.

20. Remove the front wheels.

21. Remove the front undercover (A) and the splash shield (B).

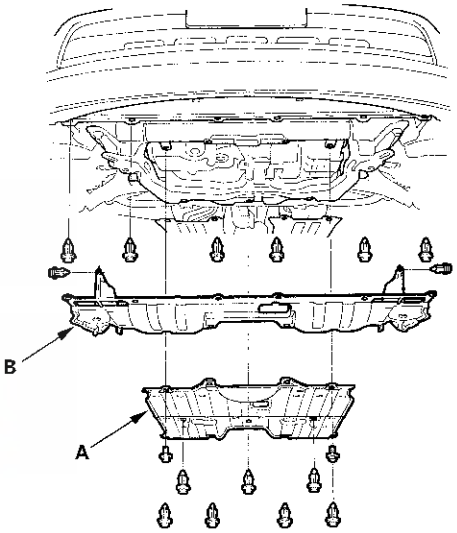

22. Loosen the drain plug in the radiator, and drain the engine coolant (see page 10-6).

23. Drain the CVT fluid (CVTF) (see page 14-176).

24. Drain the engine oil (see page 8-10).

25. Lower the vehicle on the lift.

26. Remove the radiator (see page 10-12).

(cont'd)

Engine Removal (cont'd)

27. Remove the A/C compressor, then disconnect the A/C compressor clutch connector (A) without disconnecting the A/C hoses. Do not bend the A/C hoses excessively.

    NOTE: Hang the A/C compressor with a rope.

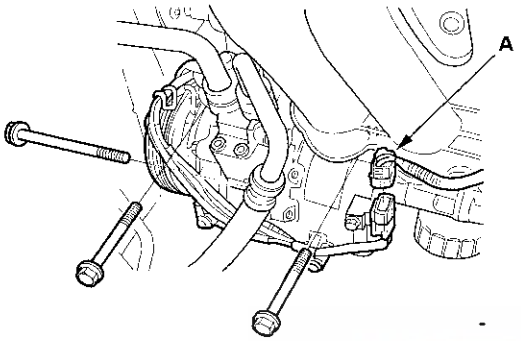

28. Remove the steering wheel (see page 17-6).

29. Remove the steering joint cover (A).

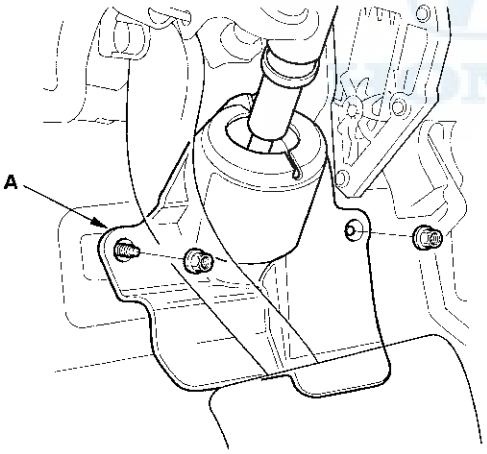

30. Make reference marks (A) across the steering joint and the steering gearbox pinion shaft. Remove the steering joint bolt (B), then disconnect the steering joint from the steering gearbox pinion shaft (C).

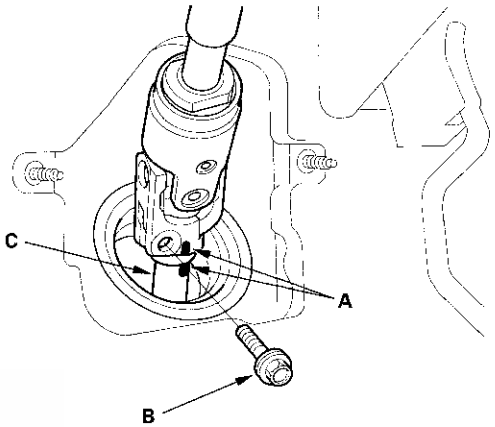

31. Remove the center guide (A) (if equipped), and discard it. The center guide is for factory assembly use only.

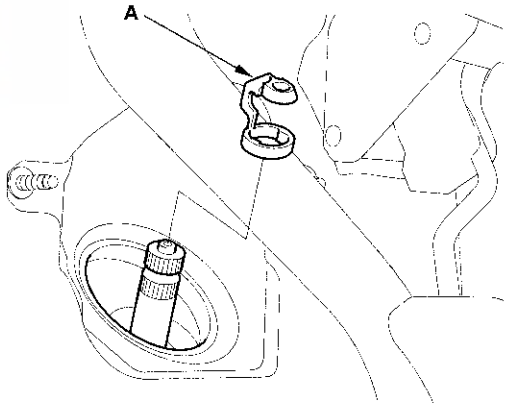

32. Remove the IMA motor power cable clamps (A), then remove the bolt (B).

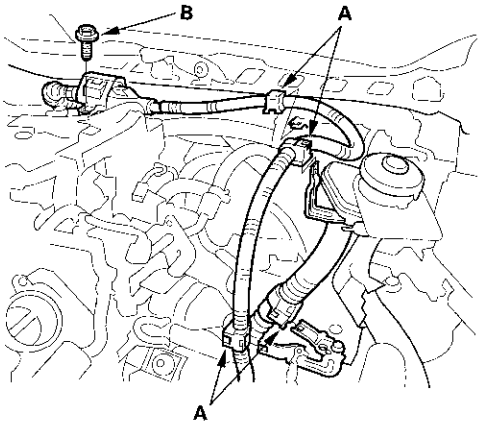

33. Disconnect the water bypass hose (A) and the heater hoses (B).

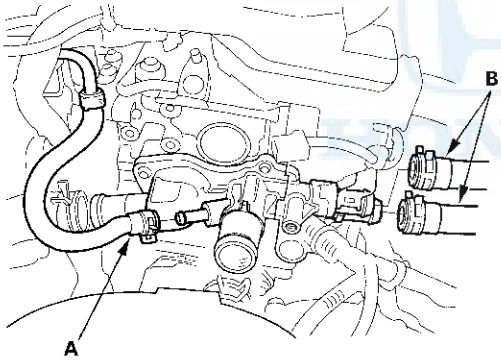

34. Disconnect the IMA motor power cable connector (see page 12-3).

NOTE: If the motor power cable terminals are wet, dry them with a clean towel. Do not use compressed air.

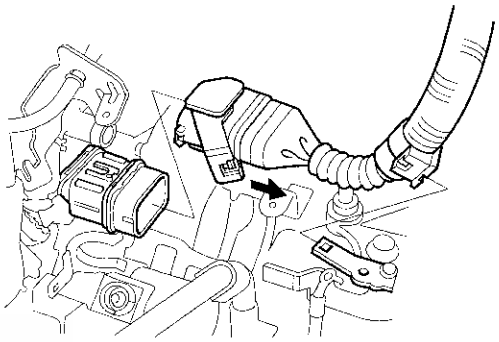

35. Remove the shift cable. Do not bend the shift cable excessively (see page 14-203).

36. Disconnect the solenoid harness connector (A) and the CVT input shaft (drive pulley) speed sensor connector (B), then remove the clamp (C).

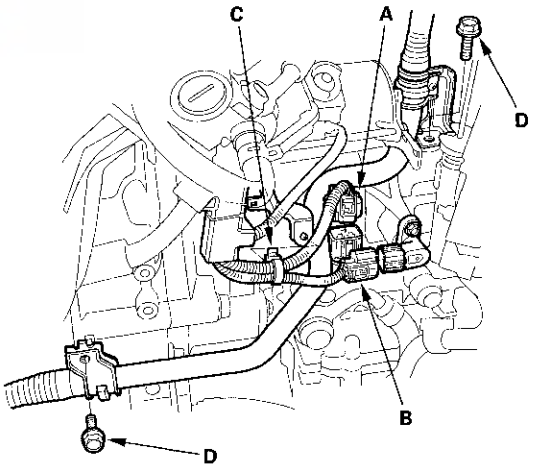

37. Remove the IMA motor power cable mounting bolts (D).

38. Raise the vehicle on the lift.

(cont'd)

Engine Removal (cont'd)

39. Remove the under-floor three way catalytic converter (TWC).

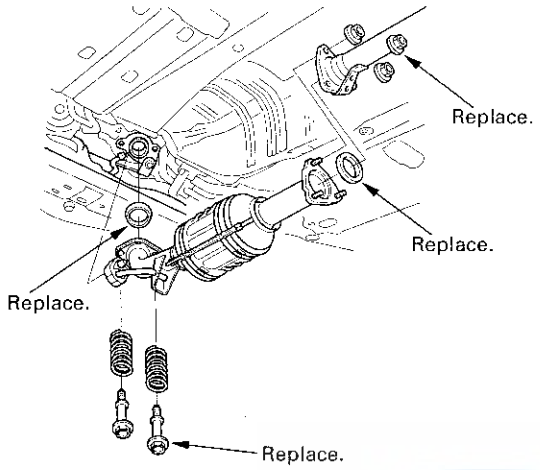

40. Disconnect the front stabilizer link (see page 18-25).

41. Disconnect the suspension lower arm ball joints (see page 18-20).

42. Remove the driveshafts (see page 16-4). Coat all precision-finished surfaces with new engine oil. Tie plastic bags over the driveshaft ends.

43. Disconnect the steering gearbox harness connectors (A).

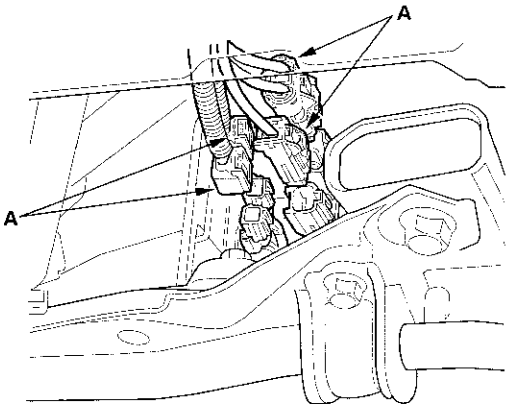

44. Lower the vehicle on the lift.

45. Install the universal lifting eyelet (07AAK-SNAA 120) to the threaded hole (A) on the cylinder head with a 10 x 1.25 mm bolt (B).

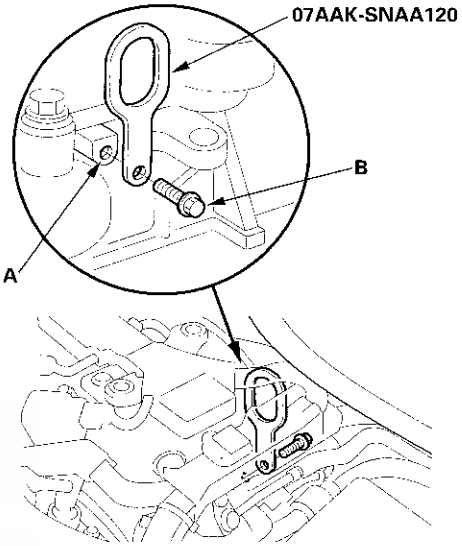

46. Install the front leg assembly (A), the hook (B), and the wing nut (C) to an A and Reds engine support hanger (AAR-T1256) onto the 2006 civic engine hanger (VSB02C000025). Carefully position the engine hanger on the vehicle, and attach the hook to the universal lifting eyelet (D). Tighten the wing nut by hand to lift and support the engine/IMA motor/transmission.

NOTE: Be careful when working around the windshield.

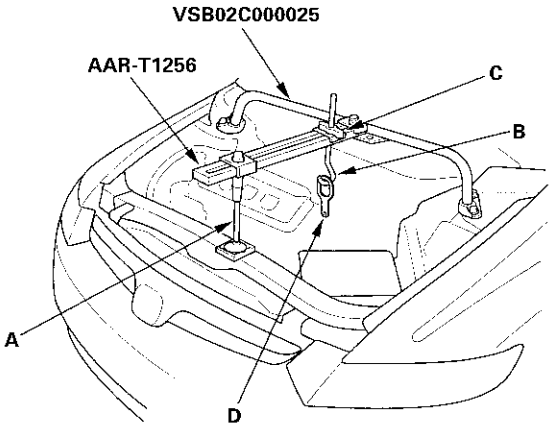

47. Make sure the hoist brackets are positioned properly. Raise the vehicle on the lift.

48. Remove the lower torque rod mounting bolts.

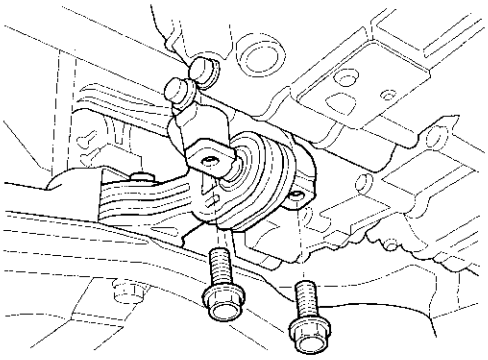

49. Make the appropriate reference lines (A) at the both sides of the front subframe that line up with the edge on the body (B).

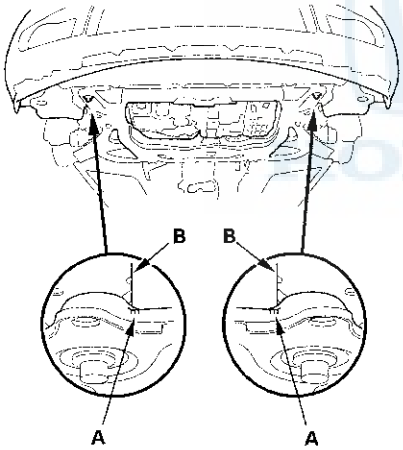

50. Loosen the mid stiffener mounting bolts (A) on both sides.

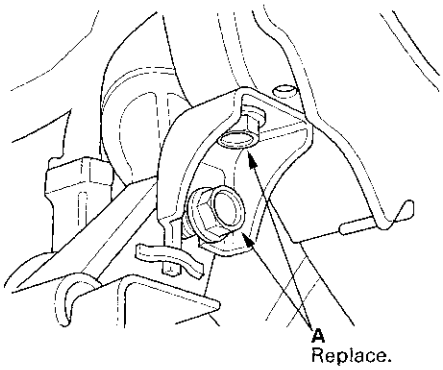

51. Attach the front subframe adapter (VSB02C000016) to the front subframe by hanging the belt (A) over the front of the front subframe, then secure the belt with its stop (B), then tighten the wing nut (C).

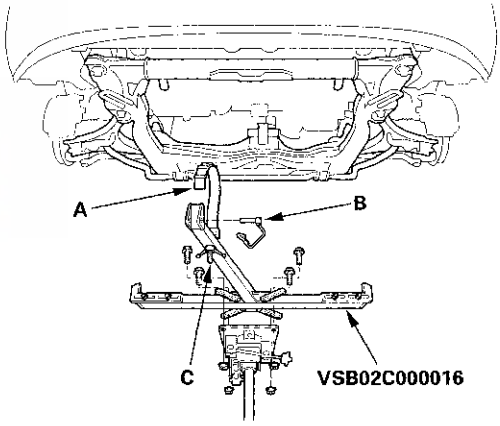

(cont'd)

Engine Removal (cont'd)

52. Raise the jack and line up the slots in the front subframe arms with the bolt holes on the jack base, then carefully attach them with four bolts.

53. Remove the four bolts securing the front subframe, and lower the front subframe.

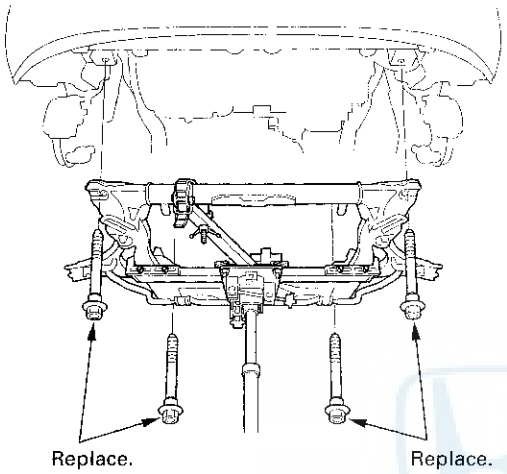

54. Lower the vehicle on the lift.

55. Install the universal lifting eyelet to the threaded hole (A) on the cylinder head with a 8 x 1.25 mm bolt (B).

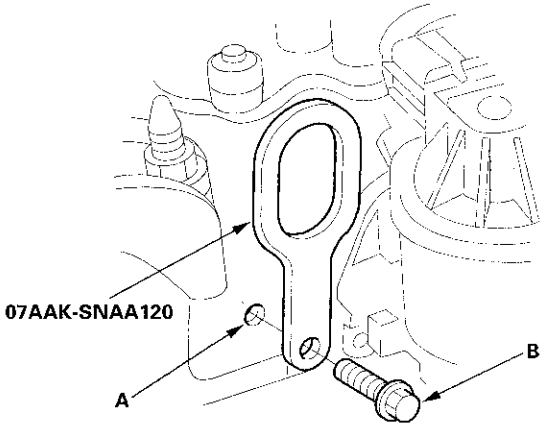

56. Attach a chain hoist (A) to the universal lifting eyelet (B), and the transmission hook (C). Lift the engine/IMA motor/transmission until its securely supported by the chain hoist, and remove the engine support hanger and the 2006 civic engine hanger.

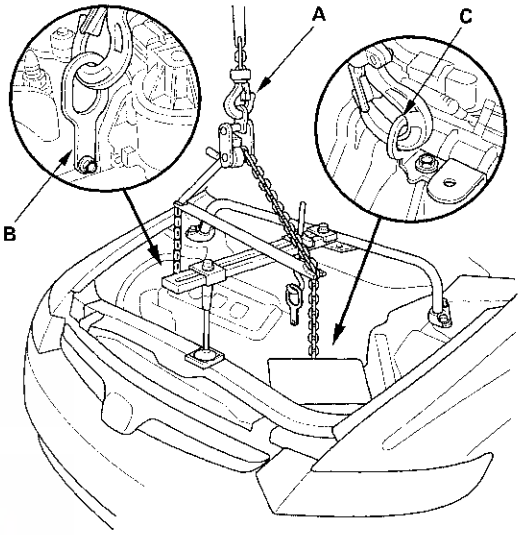

57. Remove the transmission mount bracket support bolt and nuts.

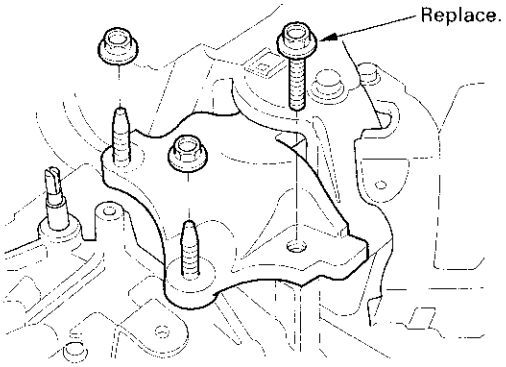

58. Remove the ground cable (A), then remove the side engine mount bracket (B).

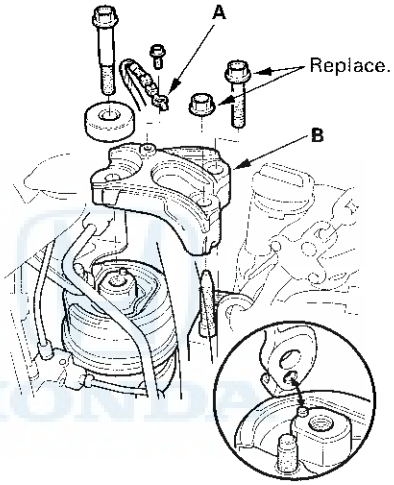

59. Check that the engine/IMA motor/transmission is completely free of vacuum hoses, fuel hoses, coolant hoses, and electrical wiring.

60. Slowly lower the engine/IMA motor/transmission about 150 mm (6 in.). Check once again that all hoses and electrical wiring are disconnected and free from the engine/IMA motor/transmission, then lower it all the way and support it.

61. Disconnect the chain hoist from the engine/IMA motor/transmission.

62. Raise the vehicle, and remove the engine/IMA motor/transmission from under the vehicle.

Engine Installation

Special Tools Required
- Universal lifting eyelet 07AAK-SNAA120
- Engine support hanger, A and Reds AAR-T1256 *
- 2006 Civic engine hanger VSB02C000025 *
- Front subframe adapter VSB02C000016 *

* : These special tools are available through Honda Tool and Equipment Program, 888-424-6857

1. Install the lower torque rod bracket, then tighten the bolts to the specified torque.

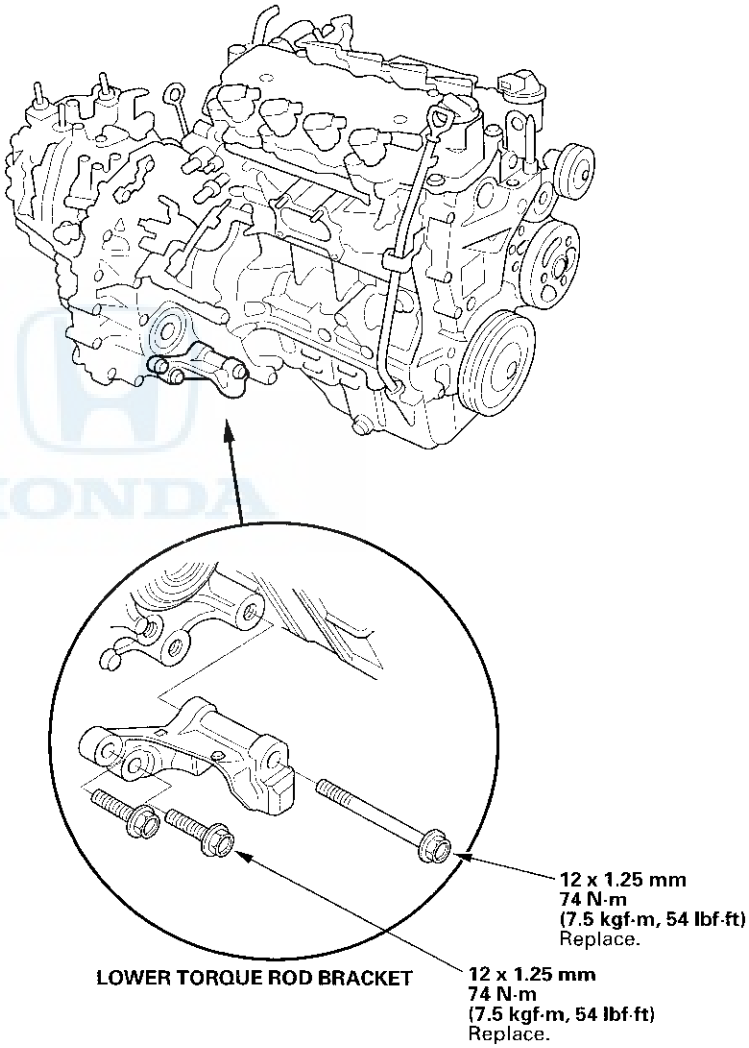

2. Raise the vehicle on the lift, and position the engine/IMA motor/transmission under the vehicle. Be sure that they are properly aligned. Carefully lower the vehicle until the engine/IMA motor/transmission is properly positioned in the engine compartment. Make sure the vehicle is not resting on any part of the engine/IMA motor/transmission.

3. Attach a chain hoist (A) to the universal lifting eyelet (07AAK-SNAA120) and the transmission hook (B). Carefully raise the engine/IMA motor/transmission with the chain hoist into place.

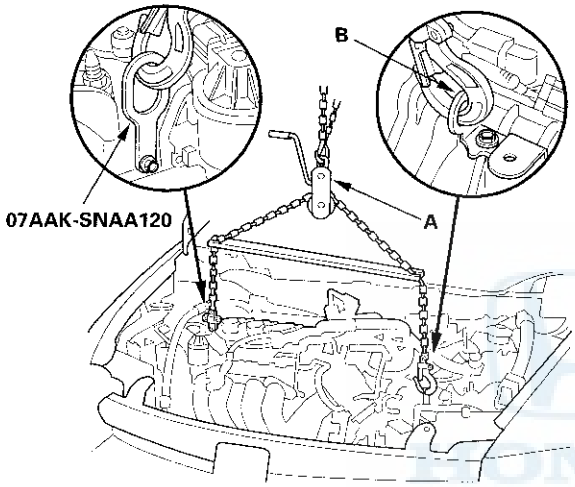

4. Install the universal lifting eyelet to the threaded hole (A) on the cylinder head with a 10 x 1.25 mm bolt (B).

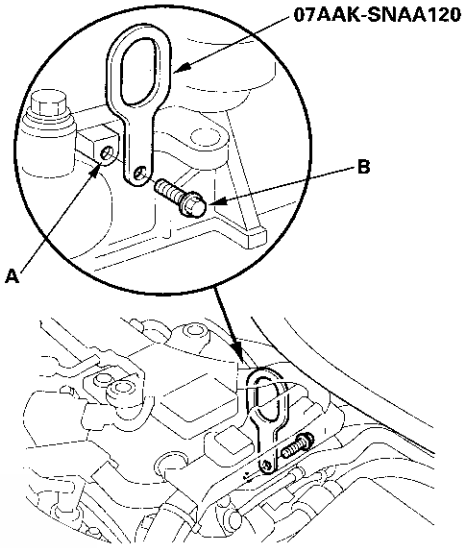

5. Install the front leg assembly (A), the hook (B), and the wing nut (C) to an A and Reds engine support hanger (AAR-T1256) onto the 2006 civic engine hanger (VSB02C000025). Carefully position the engine hanger on the vehicle, and attach the hook to the universal lifting eyelet (D). Tighten the wing nut by hand to lift and support the engine/IMA motor/transmission.

   NOTE: Be careful when working around the windshield.

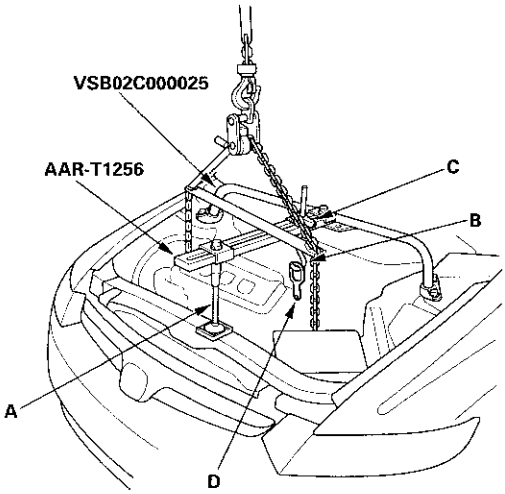

(cont'd)

Engine Installation (cont'd)

6. Install the side engine mount bracket (A), then loosely tighten the mounting bolts and nut.

   NOTE: Reinstall the mounting bolts/support nuts in the sequence given in the following steps. Failure to follow this sequence may cause excessive noise and vibration, and reduce bushing life.

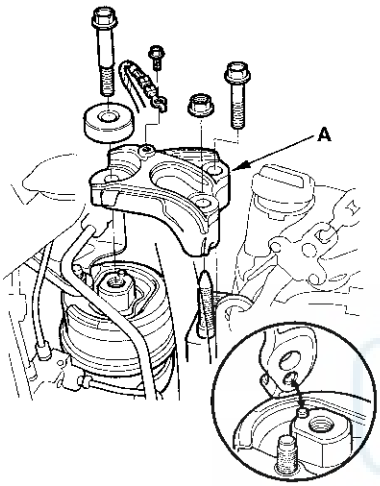

7. Loosely tighten the transmission mount bracket support bolt and nuts.

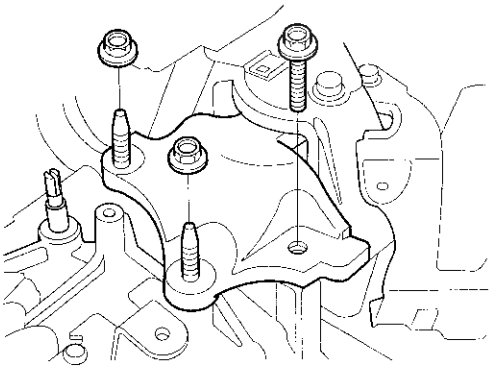

8. Remove the chain hoist and the universal lifting eyelet, then raise the vehicle on the lift.

9. Set the front subframe adapter (VSB02C000016) to the front subframe by hanging the belt (A) over the front of the front subframe, then secure the belt with its stop (B), then tighten the wing nut (C).

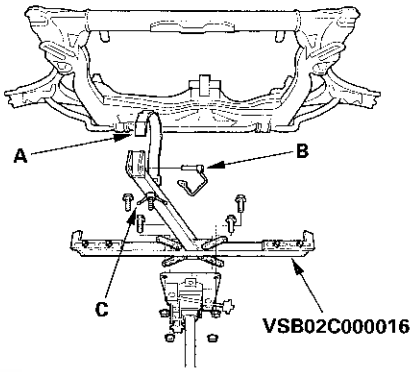

10. Line up the slots in the front subframe arms with the bolt holes on the jack base, then carefully attach them with four bolts, raise the front subframe up to the body.

11. Loosely install the new front subframe mounting bolts.

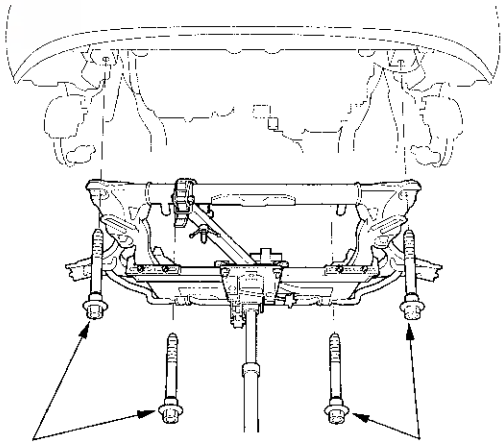

12. Align the reference marks (A) with the edge of the body (B), then tighten the bolts on the front subframe to the specified torque.

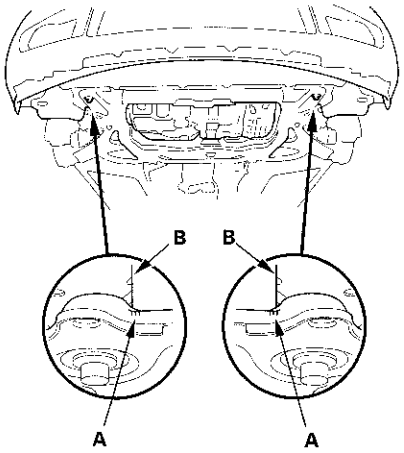

13. Remove the jack and the front subframe adapter.

14. Tighten the mid stiffener mounting bolts on both sides.

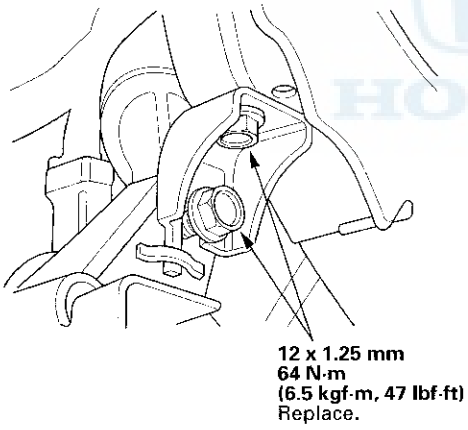

15. Tighten the lower torque rod mounting bolts.

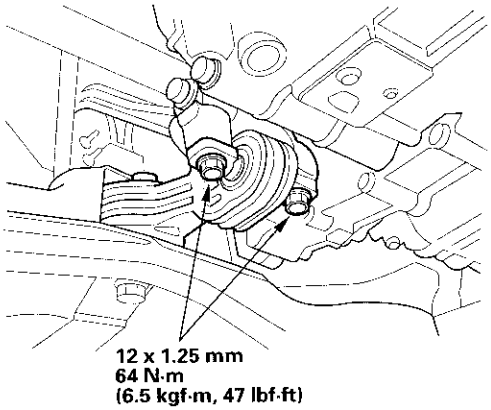

16. Lower the vehicle on the lift.

17. Tighten the side engine mount bracket mounting bolts and nut in the numbered sequence shown.

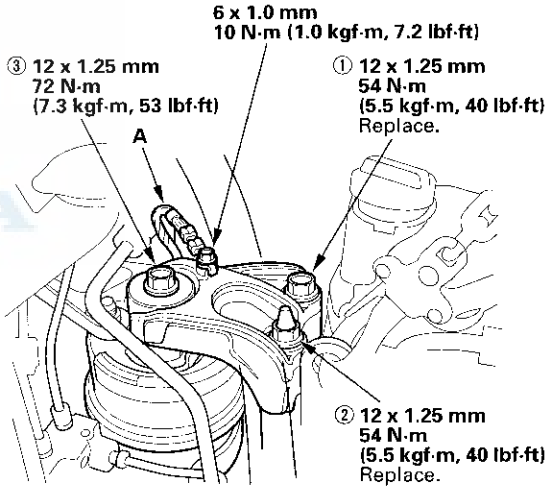

18. Install the ground cable (A).

(cont'd)

Engine Installation (cont'd)

19. Tighten the transmission mount bracket support bolt and nuts.

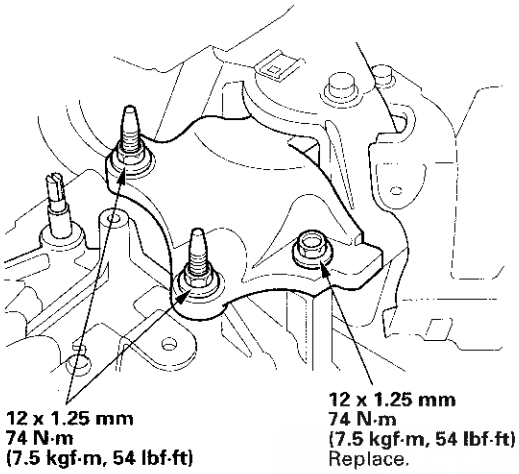

20. Remove the engine support hanger, the 2006 civic engine hanger, and the universal lifting eyelet.

21. Raise the vehicle on the lift.

22. Connect the steering gearbox harness connectors (A).

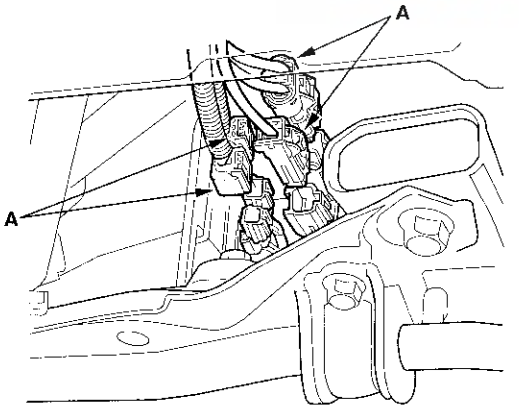

23. Install a new set ring on the end of each driveshaft, then install the driveshafts (see page 16-20). Make sure each ring "clicks" into place in the differential and the intermediate shaft.

24. Connect the suspension lower arm ball joints (see page 18-20).

25. Connect the front stabilizer links (see page 18-25).

26. Install the under-floor TWC (A); use new gaskets (B), new self-locking nuts (C) and new bolts (D).

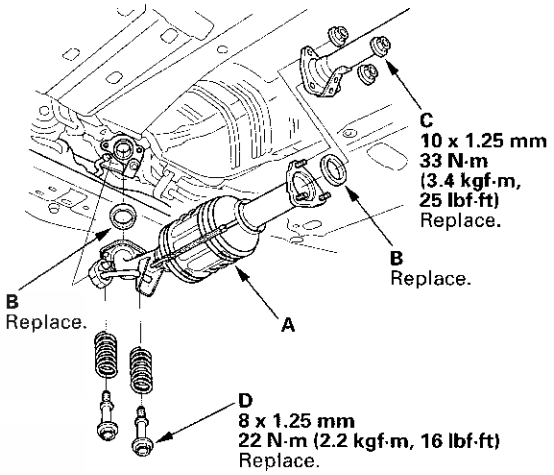

27. Install the splash shield (A) and the front undercover (B).

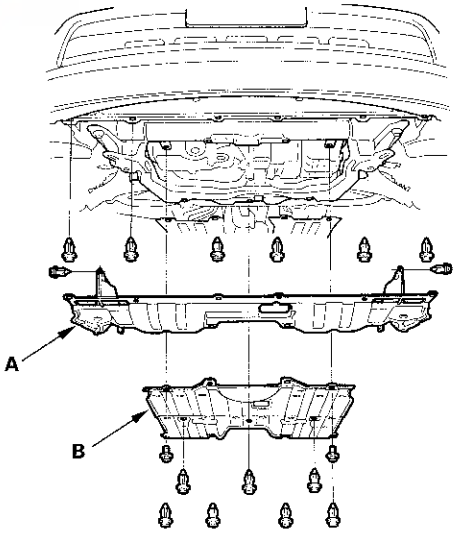

28. Lower the vehicle on the lift.

29. Install the IMA motor power cable mounting bolts (A).

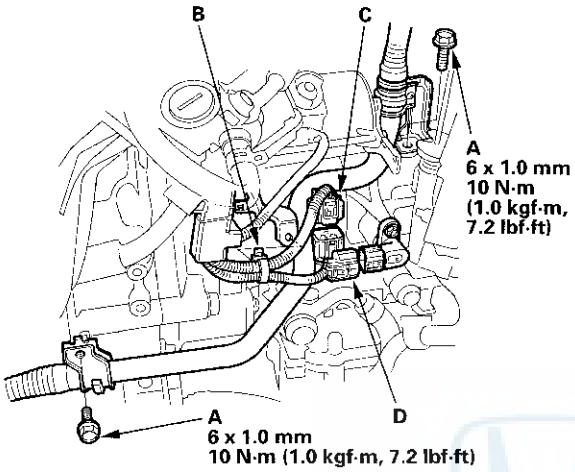

30. Install the harness clamp (B), then connect the solenoid harness connector (C) and the CVT input shaft (drive pulley) speed sensor connector (D).

31. Install the shift cable (see page 14-203).

32. Connect the IMA motor power cable connector.

NOTE: If the motor power cable terminals are wet, dry them with a clean towel. Do not use compressed air.

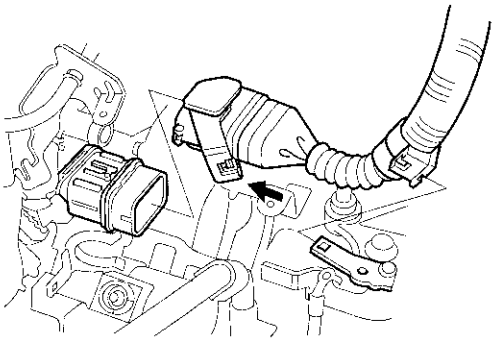

33. Connect the water bypass hose (A) and the heater hoses (B).

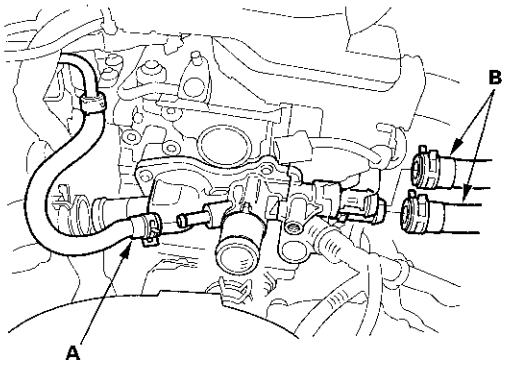

34. Install the bolt (A), then install the IMA motor power cable clamps (B).

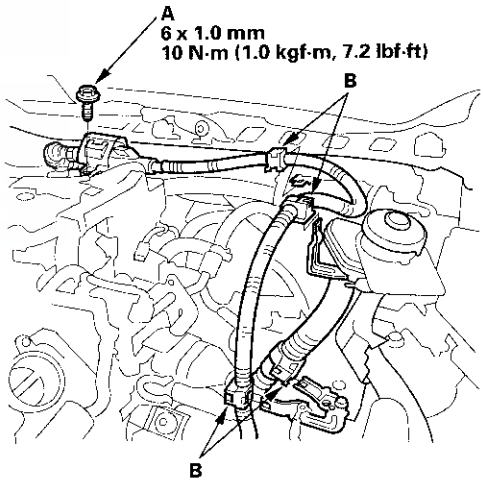

(cont'd)

Engine Installation (cont'd)

35. Align the reference marks (A) on the steering joint and the steering gearbox pinion shaft. Connect the steering joint (B) to the steering gearbox pinion shaft (C). Tighten the steering joint bolt.

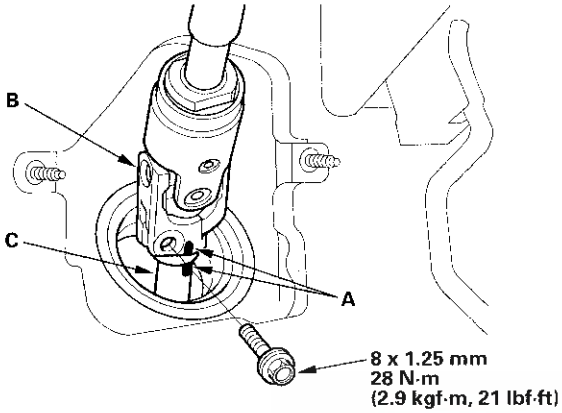

36. Install the steering joint cover.

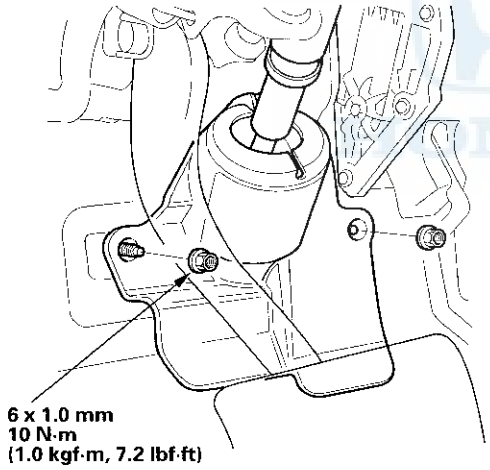

37. Install the steering wheel (see page 17-9).

38. Loosely install the A/C compressor mounting bolts and the compressor through bolt in the numbered sequence shown. Failure to follow this sequence may reduce the life of the drive.

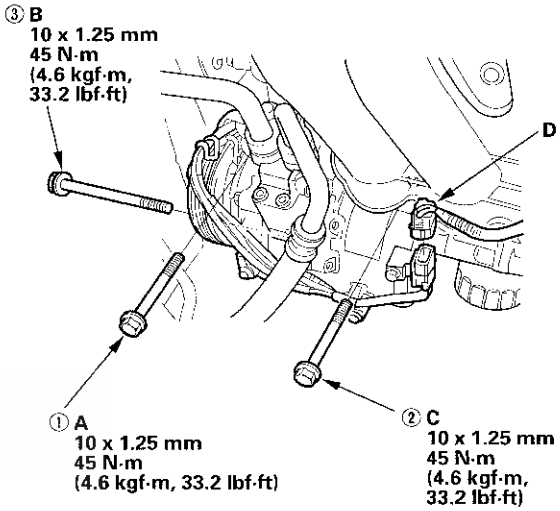

39. Tighten the A/C compressor mounting bolts (A, C), then tighten the A/C compressor through bolt (B) to the specified torque.

40. Connect the A/C compressor clutch connector (D).

41. Install the radiator (see page 10-12).

42. Install the drive belt (see page 10-10).

43. Install the evaporative emission (EVAP) canister purge valve bracket bolts (A) and the fuel pipe nut (B), then connect the purge joint to the bracket (C).

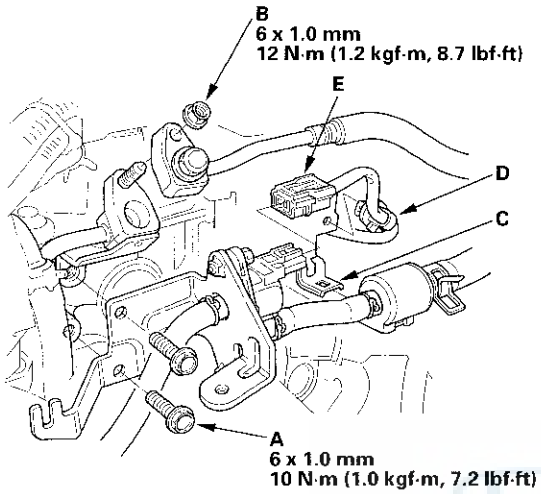

44. Install the harness clamp (D), then connect the EVAP canister purge valve connector (E).

45. Connect the vacuum hose.

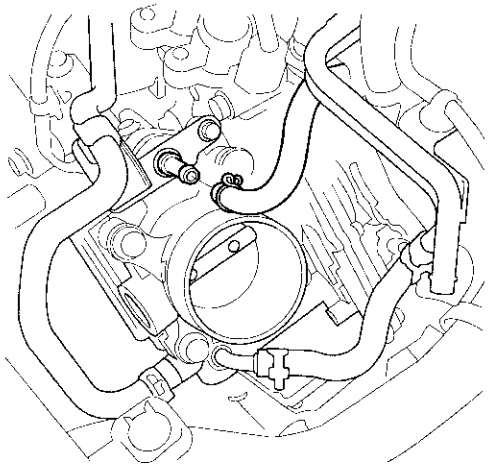

46. Install the harness clamp (A), then connect the engine wire harness connectors (B) on the left side of the engine compartment.

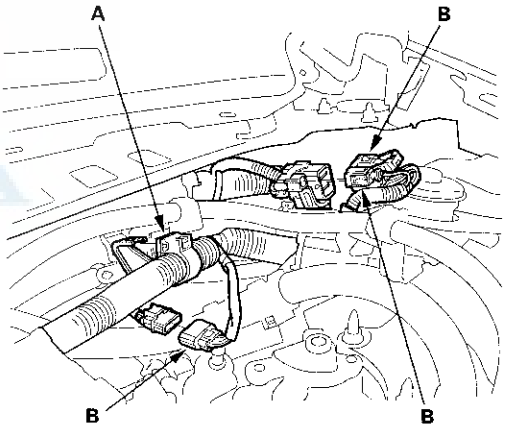

(cont'd)

Engine Installation (cont'd)

47. Connect the powertrain control module (PCM) connectors (A).

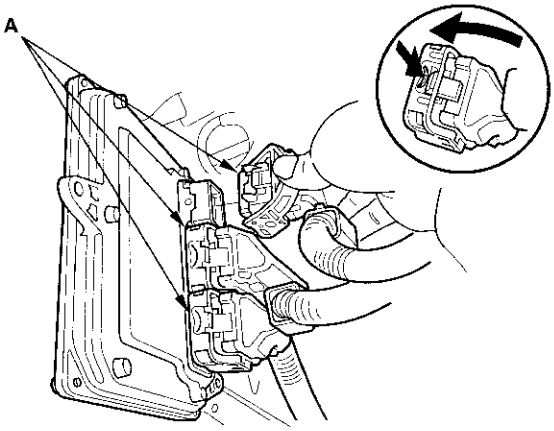

48. Install the bolts (A), then install the PCM cover (B).

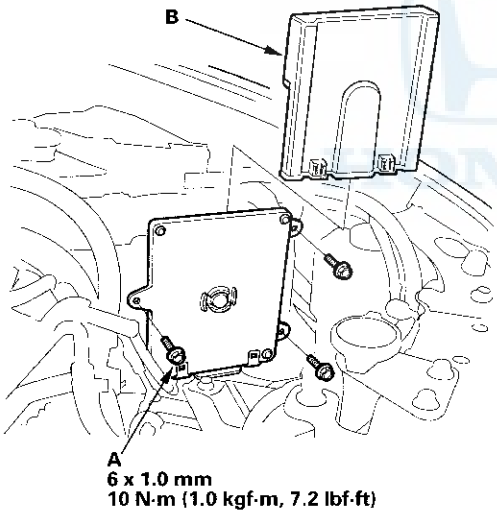

49. Install the harness clamp (A) and the ground cable (B), then connect the positive starter cable (C).

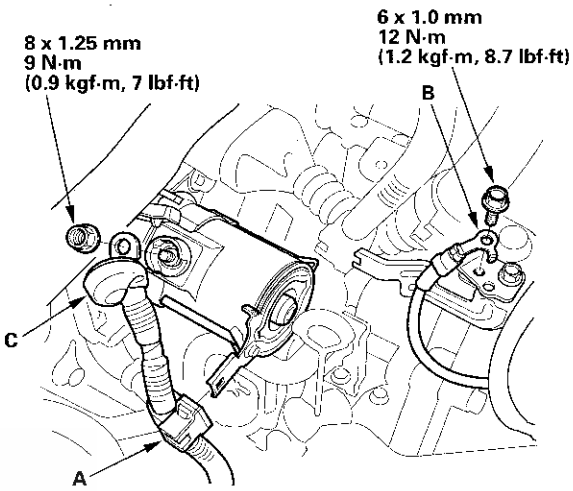

50. Install the air cleaner assembly (see page 11-370).

51. Install the intake air duct.

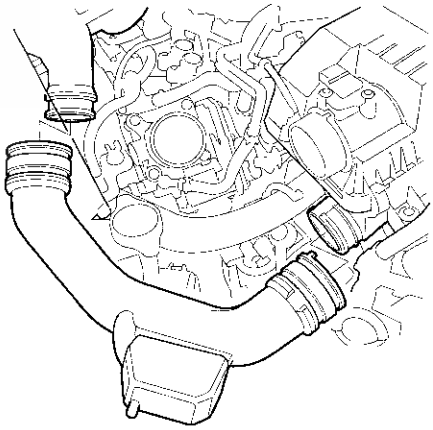

52. Install the resonator (see page 11-371).

53. Install the engine cover.

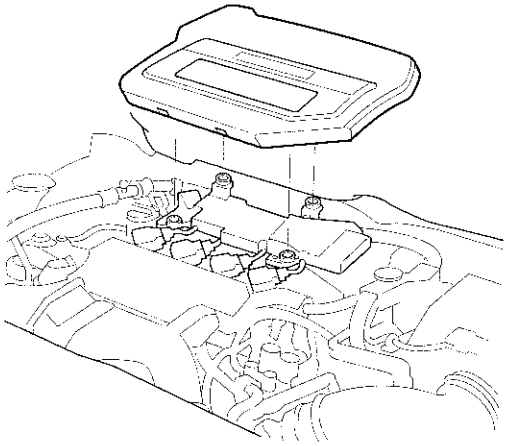

54. Install the under-cowl panel and the cowl cover (see page 20-140).

55. Install the front wheels.

56. Do the battery installation procedure (see page 22-63).

57. Turn the IMA battery module switch ON (see page 12-4).

58. Inspect for fuel leaks. Turn the ignition switch to ON (II) (do not operate the starter) so the fuel pump runs for about 2 seconds and pressurizes the fuel lines. Repeat this operation three times, then check fuel leakage at any point in the fuel line.

59. Refill the engine with the recommended engine oil (see page 8-10).

60. Refill the transmission with CVT fluid (CVTF) (see page 14-176).

61. Move the shift lever to each gear, and verify that the A/T gear position indicator follows the transmission range switch.

62. Refill the radiator with engine coolant, and bleed the air from the cooling system with the heater valve open (see step 9 on page 10-7).

63. Check for fluid leaks.

64. Do the PCM reset procedure (see page 11-4).

65. Do the PCM idle learn procedure (see page 11-333).

66. Do the crankshaft position (CKP) pattern clear/CKP pattern learn procedure (see page 11-4).

67. Inspect the idle speed (see page 11-332).

68. Inspect the ignition timing (see page 4-19).

69. Check the wheel alignment (see page 18-6).

70. Do the start clutch pressure calibration procedures (see page 14-172).

71. If the IMA battery level gauge (BAT) displays no segment, start the engine, and hold it between 3,500 rpm and 4,000 rpm without load (in N or P) until the BAT displays at least three segments.

Engine Mount Replacement

Exploded View

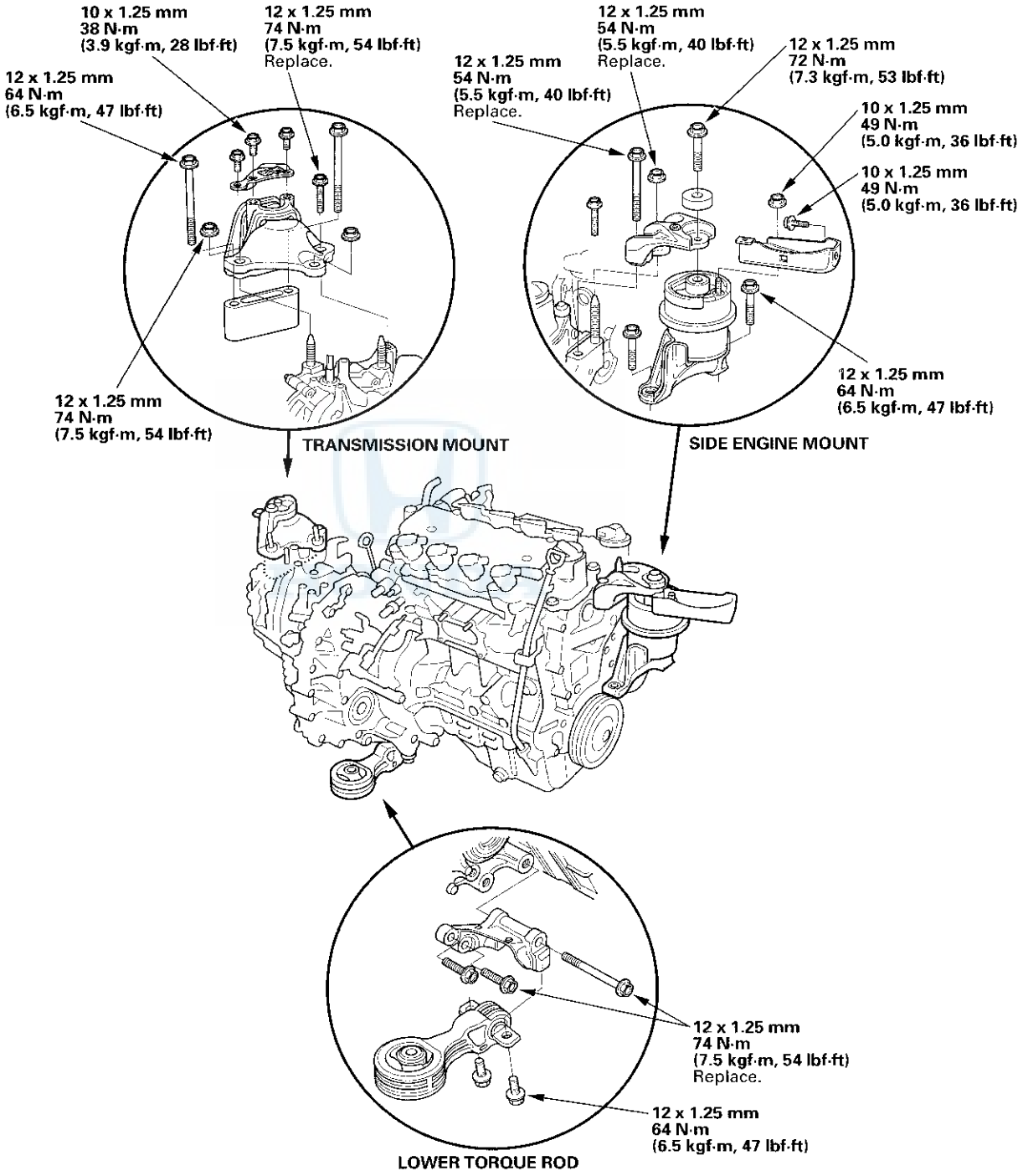

Engine Mechanical

Cylinder Head

Special Tools 6-2
Component Location Index 6-3
Engine Compression Inspection 6-6
VTEC Rocker Arm Test 6-7
Valve Clearance Adjustment 6-10
Crankshaft Pulley Removal and Installation 6-12
Cam Chain Removal 6-14
Cam Chain Installation 6-16
Chain Case Oil Seal Installation 6-20
CKP Pulse Plate Replacement 6-21
Cylinder Head Cover Removal 6-22
Cylinder Head Cover Installation 6-22
Cylinder Head Removal 6-24
Camshaft Sprocket Removal 6-27
Camshaft Sprocket Installation 6-28
CMP Pulse Plate Removal and Installation 6-30
Cylinder Head Inspection for Warpage 6-31
Rocker Arm Assembly and Camshaft Removal 6-32
Rocker Arm and Shaft
Disassembly/Reassembly 6-33
Rocker Arm and Shaft Inspection 6-34
Camshaft Inspection 6-35
Valve, Spring, and Valve Seal Removal 6-38
Valve Inspection 6-39
Valve Stem-to-Guide Clearance Inspection 6-39
Valve Guide Replacement 6-40
Valve Seat Reconditioning 6-42
Valve, Spring, and Valve Seal Installation 6-44
Rocker Arm Assembly and Camshaft Installation 6-45
Cylinder Head Installation 6-45

Special Tools

Ref. No.	Tool Number	Description	Qty
①	07AAJ-PNAA101	Air Pressure Regulator	1
②	07HAH-PJ7A100	Valve Guide Reamer, 5.5 mm	1
③	07JAA-001020A	Socket, 19 mm	1
④	07JAB-001020A	Holder Handle	1
⑤	07NAB-001040A	Holder Attachment, 50 mm	1
⑥	07PAD-0010000	Stem Seal Driver	1
⑦	07757-PJ1010A	Valve Spring Compressor Attachment	1
⑧	07742-0010100	Valve Guide Driver, 5.5 mm	1
⑨	07746-0010400	Attachment, 52 x 55 mm	1
⑩	07749-0010000	Driver	1
⑪	07VAJ-P8A010A	VTEC Air Adapter	1

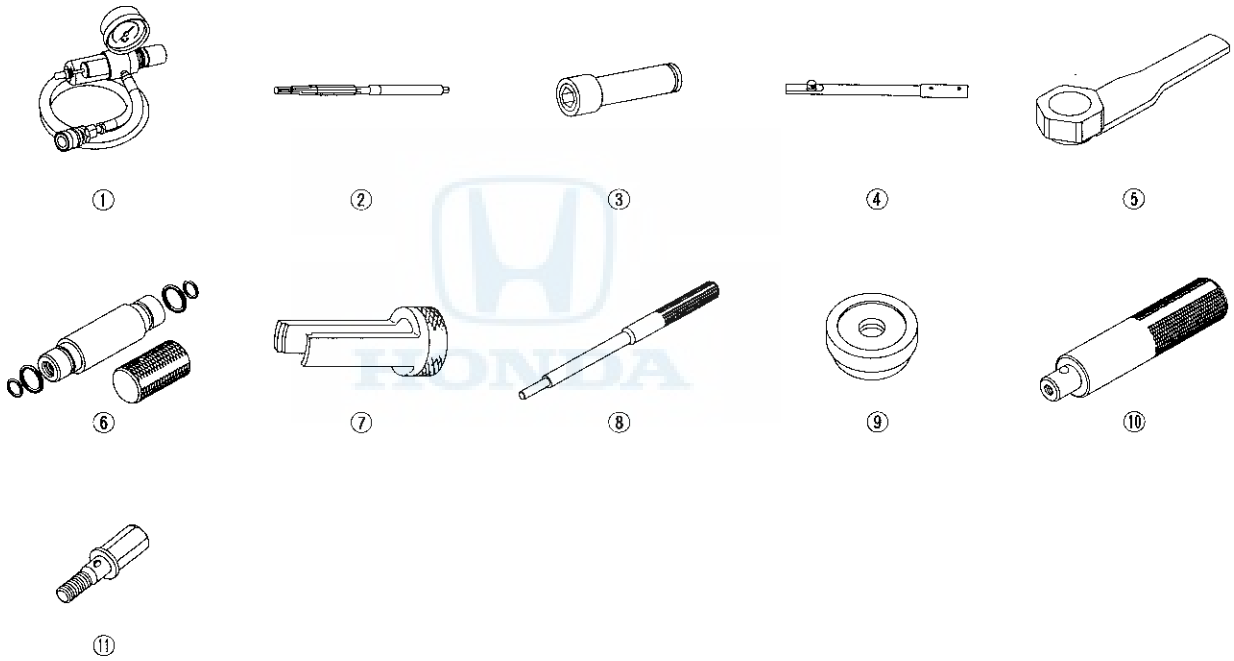

Component Location Index

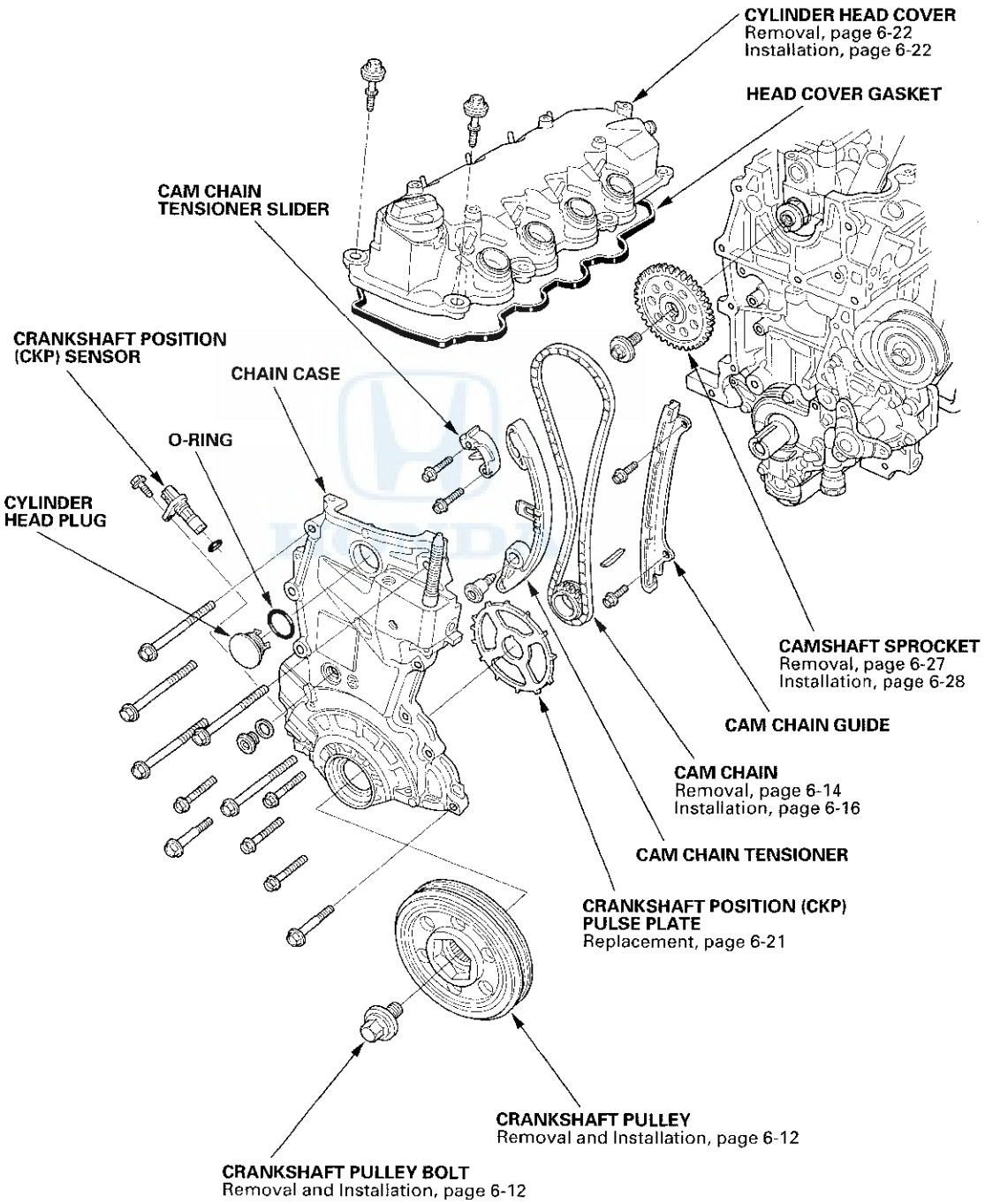

(cont'd)

Component Location Index (cont'd)

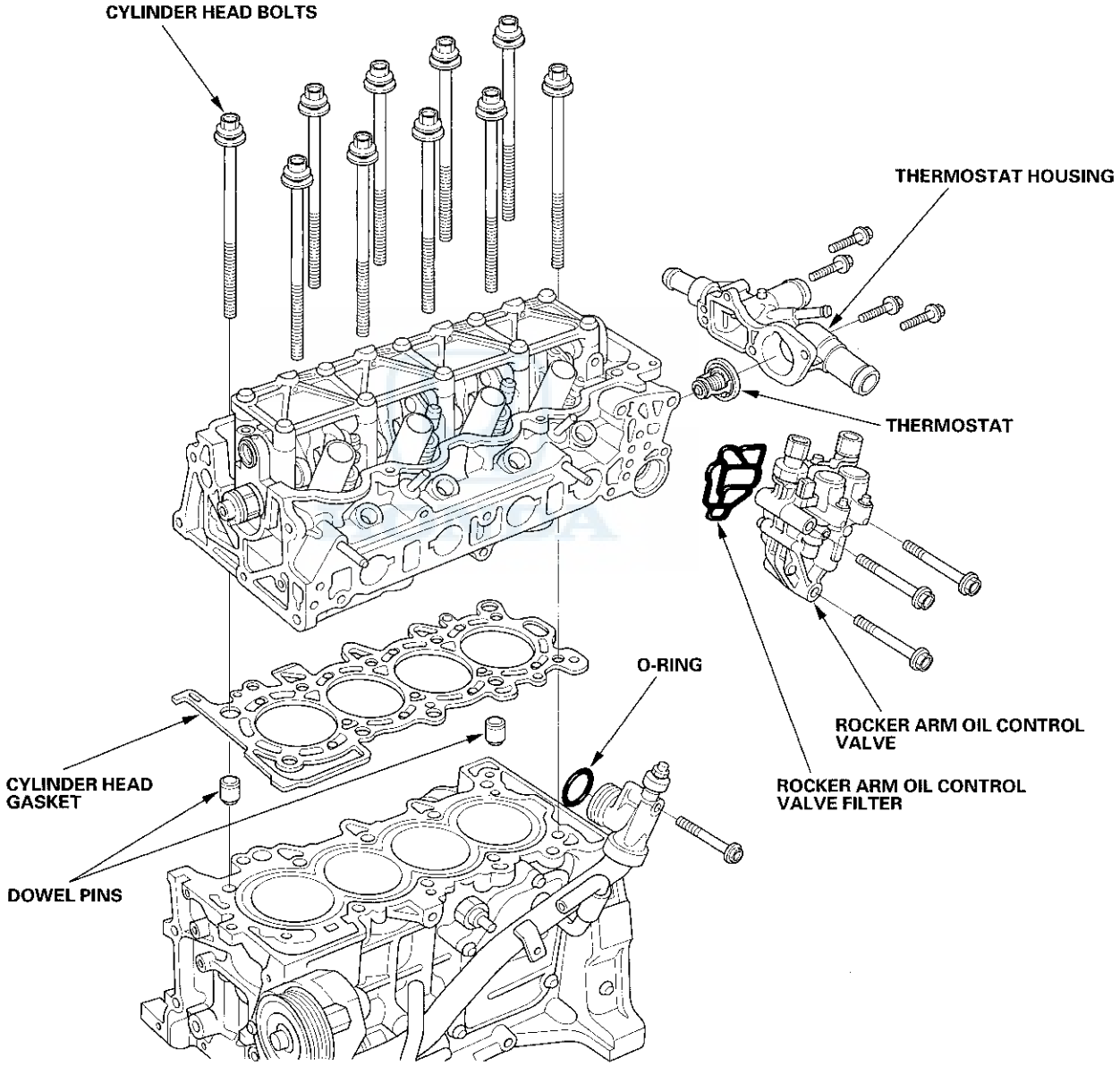

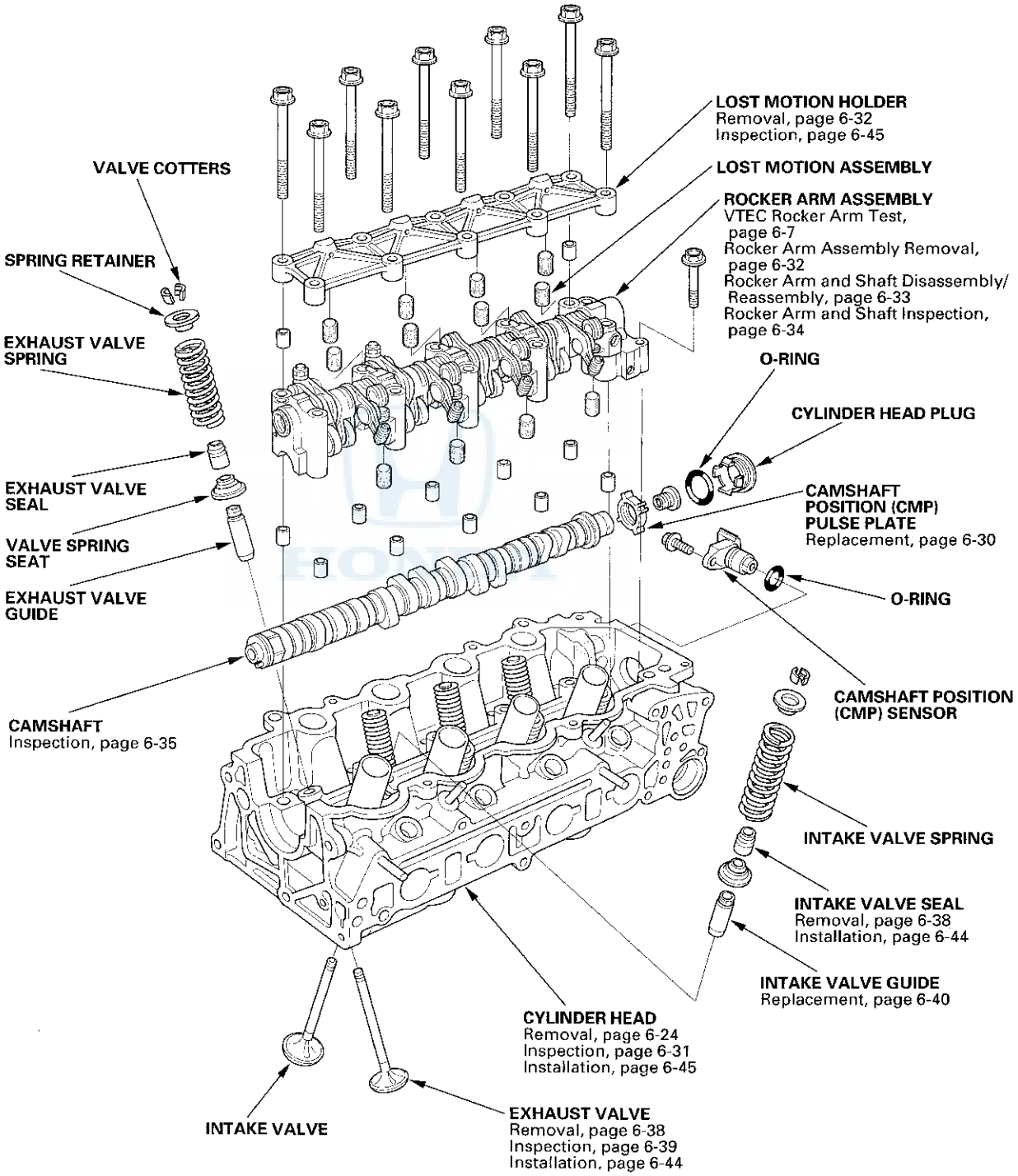
LOST MOTION HOLDER
Removal, page 6-32
Inspection, page 6-45
VALVE COTTERS
LOST MOTION ASSEMBLY
ROCKER ARM ASSEMBLY
VTEC Rocker Arm Test, page 6-7
Rocker Arm Assembly Removal, page 6-32
Rocker Arm and Shaft Disassembly/Reassembly, page 6-33
Rocker Arm and Shaft Inspection, page 6-34
SPRING RETAINER
EXHAUST VALVE SPRING
O-RING
CYLINDER HEAD PLUG
EXHAUST VALVE SEAL
CAMSHAFT POSITION (CMP) PULSE PLATE
Replacement, page 6-30
VALVE SPRING SEAT
EXHAUST VALVE GUIDE
O-RING
CAMSHAFT POSITION (CMP) SENSOR
CAMSHAFT
Inspection, page 6-35
INTAKE VALVE SPRING
INTAKE VALVE SEAL
Removal, page 6-38
Installation, page 6-44
INTAKE VALVE GUIDE
Replacement, page 6-40
CYLINDER HEAD
Removal, page 6-24
Inspection, page 6-31
Installation, page 6-45
INTAKE VALVE
EXHAUST VALVE
Removal, page 6-38
Inspection, page 6-39
Installation, page 6-44

Engine Compression Inspection

NOTE: After the inspection, you must reset the powertrain control module (PCM). Otherwise, the PCM will continue to stop the fuel injectors from operating.

1. Warm up the engine to normal operating temperature (cooling fan comes on).
2. Turn the ignition switch to LOCK (0).
3. Connect the Honda Diagnostic System (HDS) to the data link connector (DLC) (see step 2 on page 11-3).
4. Turn the ignition switch to ON (II).
5. Make sure the HDS communicates with the vehicle and the PCM. If it does not communicate, troubleshoot the DLC circuit (see page 11-213).
6. Select ALL INJECTORS STOP in the PGM-FI INSPECTION menu with the HDS.
7. Turn the ignition switch to LOCK (0).
8. Remove the four intake side ignition coils (see page 4-20).
9. Remove the four intake side spark plugs.
10. Attach the compression gauge to a spark plug hole.

    NOTE: Use a compression gauge with a connecting length (between the edge and the flange) of less than 23 mm (0.9 in.).

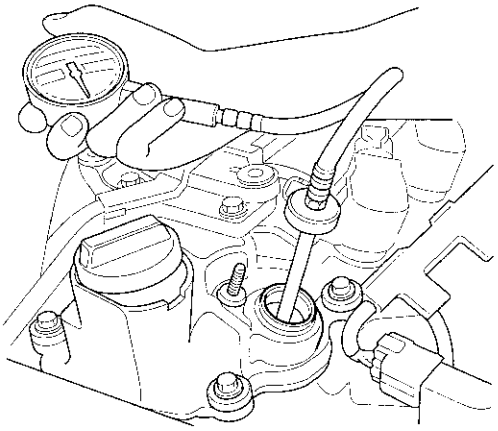

11. Turn the IMA battery module switch OFF (see page 12-4).
12. Step on the accelerator pedal to open the throttle fully, then crank the engine with the starter motor and measure the compression.

    Compression Pressure:
    Above 980 kPa (10.0 kgf/cm^2, 142 psi)

13. Measure the compression on the remaining cylinders.

    Maximum Variation:
    Within 200 kPa (2.0 kgf/cm^2, 28 psi)

14. If the compression is not within specifications, check the following items, then remeasure the compression.

    - Incorrect valve clearance
    - Confirmation of cam timing
    - Damaged or worn cam lobes
    - Looseness exhaust side spark plug
    - Damaged or worn valves and seats
    - Damaged cylinder head gasket
    - Damaged or worn piston rings
    - Damaged or worn piston and cylinder bore

15. Remove the compression gauge from the spark plug hole.
16. Install the four intake side spark plugs.
17. Install the four intake side ignition coils (see page 4-20).
18. Select PCM reset (see page 11-4) in the PGM-FI INSPECTION menu to cancel ALL INJECTORS STOP with the HDS.
19. Do the PCM idle learn procedure (see page 11-333).
20. Do the start clutch pressure control calibration procedures (see page 14-172).
21. Turn the IMA battery module switch ON (see page 12-4).
22. Clear any IMA DTCs that may have been set while doing this inspection procedure.
23. If the IMA battery level gauge (BAT) displays no segment, start the engine, and hold it between 3,500 rpm and 4,000 rpm without load (in N or P) until the BAT displays at least three segments.

VTEC Rocker Arm Test

Special Tools Required
- Air pressure regulator 07AAJ-PNAA101
- VTEC air adapter 07VAJ-P8A010A

1. Start the engine and let it run for 5 minutes, then turn the ignition switch to LOCK (0).

2. Remove the cylinder head cover (see page 6-22).

3. Set the No. 1 piston at top dead center (TDC) (see step 2 on page 6-10).

4. Push on the intake 1st rocker arm (A) for the No. 1 cylinder. Make sure that the intake 1st rocker arm and the intake 2nd rocker arm (B) are mechanically connected by the rocker arm pistons and that the intake 2nd rocker arm does not move when pushed manually. Then move the intake 3rd rocker arm (C) for the No. 1 cylinder. The intake 3rd rocker arm should move independently of the intake 1st rocker arm.

   - If the intake 2nd rocker arm does not move independently and the intake 3rd rocker arm moves independently, go to step 5.
   - If the intake 2nd rocker arm moves independently, remove and disassemble the rocker arm assembly, and check that the rocker arm pistons between the intake 1st and 2nd rocker arms move smoothly. If any rocker arm or rocker arm piston needs replacing, replace the rocker arms for the cylinder as an assembly, then retest.
   - If the intake 3rd rocker arm does not moves independently, remove and disassemble the rocker arm assembly, and check that the rocker arm pistons between the intake 2nd and 3rd rocker arms move smoothly. If any rocker arm or rocker arm piston needs replacing, replace the rocker arms for the cylinder as an assembly, then retest.

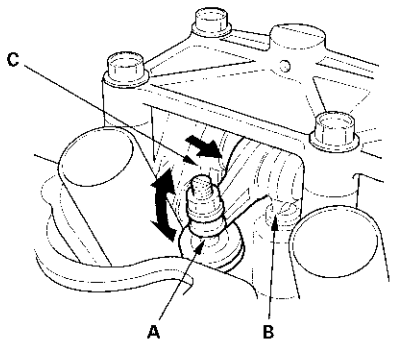

5. Push on the exhaust 1st rocker arm (A) for the No. 1 cylinder. Make sure that the exhaust 1st rocker arm and the exhaust 2nd rocker arm (B) are mechanically connected by the rocker arm pistons and that the exhaust 2nd rocker arm does not move when pushed manually.

   - If the exhaust 2nd rocker arm does not move independently, go to step 6.
   - If the exhaust 2nd rocker arm moves independently, remove and disassemble the rocker arm assembly, and check that the rocker arm pistons between the exhaust 1st and 2nd rocker arms move smoothly. If any rocker arm or rocker arm piston needs replacing, replace the rocker arms for the cylinder as an assembly, then retest.

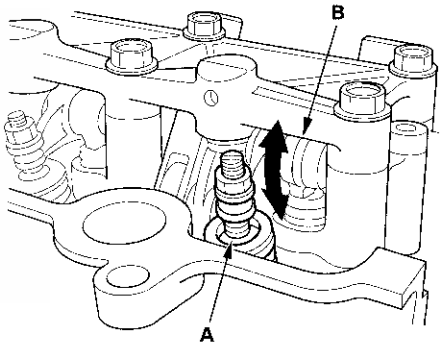

(cont'd)

VTEC Rocker Arm Test (cont'd)

6. Check that the air pressure on the shop air compressor gauge indicates over 400 kPa (4.0 kgf/cm², 47 psi).

7. Inspect the valve clearance (see page 6-10).

8. Install the VTEC air adapter (A) to the cam chain side inspection hole, then connect the air pressure regulator (B).

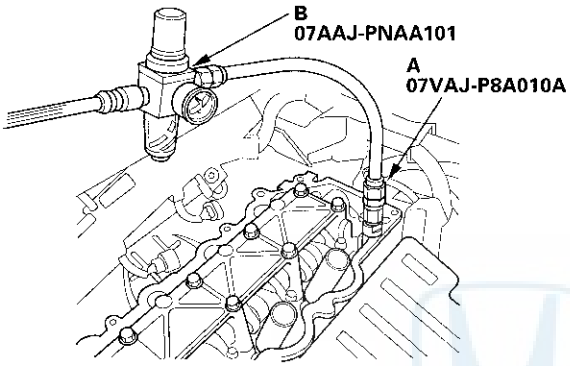

9. Loosen the valve on the regulator, and apply the specified air pressure.

   Specified Air Pressure:
   200 kPa (2.0 kgf/cm², 28 psi)

10. Push on the intake 1st rocker arm (A) for the No. 1 cylinder. Make sure that the intake 1st rocker arm and the intake 3rd rocker arm (B) are mechanically connected by the rocker arm pistons and that the intake 3rd rocker arm does not move when pushed manually.

    - If the intake 3rd rocker arm does not move independently, go to step 11.
    - If the intake 3rd rocker arm moves independently, remove and disassemble the rocker arm assembly, and check that the rocker arm pistons between the intake 1st and 3rd rocker arms move smoothly. If any rocker arm or rocker arm piston needs replacing, replace the rocker arms for the cylinder as an assembly, then retest.

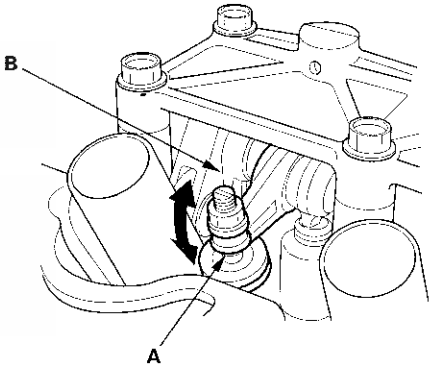

11. Tighten the valve on the air pressure regulator, then remove the VTEC air adapter.

12. Install the VTEC air adapter (A) to the transmission side inspection hole, then connect the air pressure regulator (B).

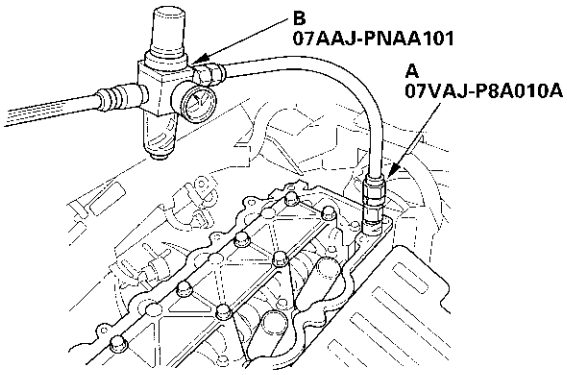

13. Move the intake 2nd rocker arm (A) and the intake 3rd rocker arm (B) for the No. 1 cylinder. The intake 2nd and the intake 3rd rocker arm should move independently of the intake 1st rocker arm (C).

    - If the intake 2nd and 3rd rocker arms move independently, go to step 14.
    - If the intake 2nd or intake 3rd rocker arm does not move independently, remove and disassemble the rocker arm assembly, and check that the rocker arm pistons between the intake 1st and 2nd rocker arms move or intake 1st and 3rd smoothly. If any rocker arm or rocker arm piston needs replacing, replace the rocker arms for the cylinder as an assembly, then retest.

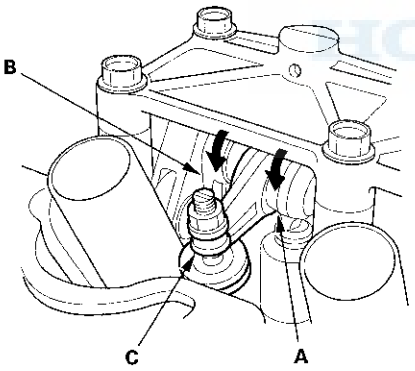

14. Move the exhaust 2nd rocker arm (A) for the No. 1 cylinder. The exhaust 2nd rocker arm should move independently of the exhaust 1st rocker arm (B).

    - If the exhaust 2nd rocker arm moves independently, go to step 15.
    - If the exhaust 2nd rocker arm does not move independently, remove and disassemble the rocker arm assembly, and check that the rocker arm pistons between the exhaust 1st and 2nd rocker arms move smoothly. If any rocker arm or rocker arm piston needs replacing, replace the rocker arms for the cylinder as an assembly, then retest.

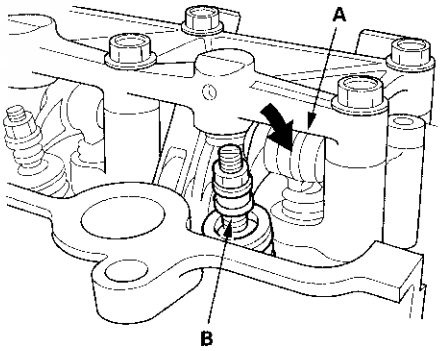

15. Tighten the valve on the air pressure regulator, then remove the VTEC air adapter.

16. Repeat step 4 to 15 on the remaining cylinders rocker arms with each piston at TDC. When all the rocker arms pass the test, go to step 17.

17. Install the cylinder head cover (see page 6-22).

Valve Clearance Adjustment

NOTE: Connect the Honda Diagnostic System (HDS) to the data link connector (DLC), and monitor the engine coolant temperature (ECT) sensor 1. Adjust the valve clearance only when the ECT 1 temperature is less than 100 °F (38 °C).

1. Remove the cylinder head cover (see page 6-22).

2. Set the No. 1 piston at top dead center (TDC). The "UP" mark (A) on the camshaft sprocket should be at the top, and the TDC grooves (B) on the camshaft sprocket should line up with the top edge of the chain case.

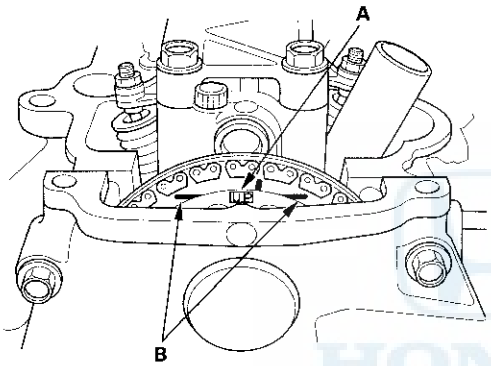

3. Select the correct feeler gauge for the valves you are going to check.

Valve Clearance
Intake: 0.15—0.19 mm (0.006—0.007 in.)
Exhaust: 0.24—0.28 mm (0.009—0.011 in.)

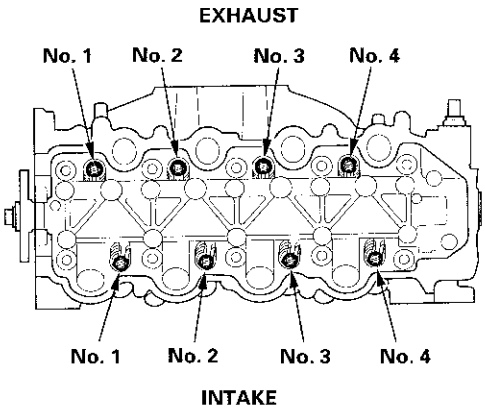

4. Insert the feeler gauge (A) between the adjusting screw (B) and the end of the valve stem on No. 1 cylinder and slide it back and forth; you should feel a slight amount of drag.

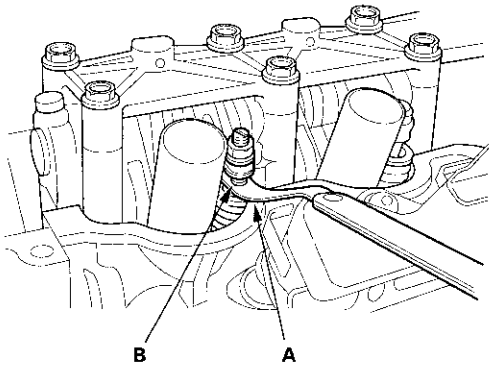

5. If you feel too much or too little drag, loosen the locknut (A), and turn the adjusting screw (B) until the drag on the feeler gauge is correct.

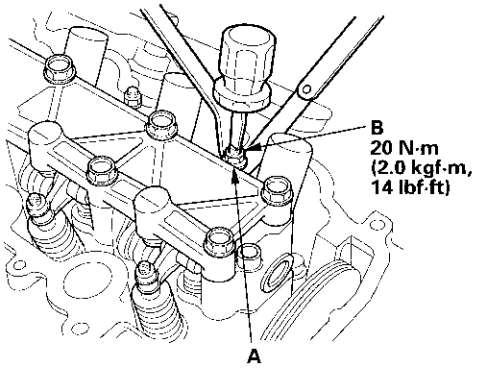

6. Tighten the locknut and recheck the clearance. Repeat the adjustment if necessary.

Specified Torque
20 N·m (2.0 kgf·m, 14 lbf·ft)
Apply new engine oil to the nut threads.

7. Rotate the crankshaft clockwise. Align the No. 3 piston TDC groove (A) on the camshaft sprocket with the top edge of the chain case.

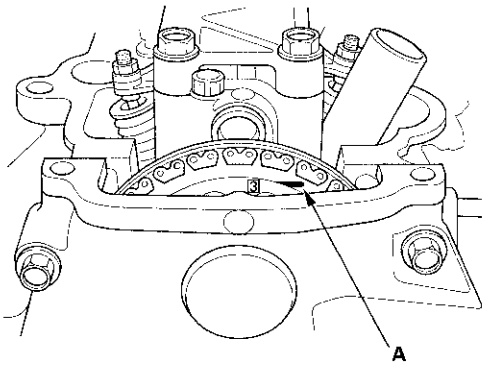

8. Check the valve clearance on the No. 3 cylinder; adjust it if necessary.

9. Rotate the crankshaft clockwise. Align the No. 4 piston TDC groove (A) on the camshaft sprocket with the top edge of the chain.

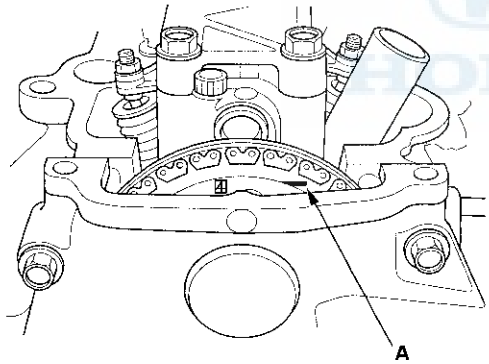

10. Check the valve clearance on the No. 4 cylinder; adjust it if necessary.

11. Rotate the crankshaft clockwise. Align the No. 2 piston TDC groove (A) on the camshaft sprocket with the top edge of the head.

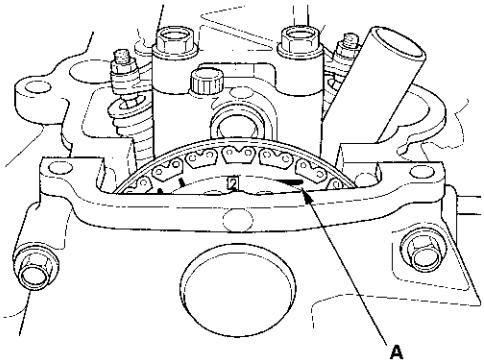

12. Check the valve clearance on the No. 2 cylinder; adjust it if necessary.

13. Install the cylinder head cover (see page 6-22).

Crankshaft Pulley Removal and Installation

Special Tools Required
- Holder handle 07JAB-001020A
- Holder attachment, 50 mm 07NAB-001040A
- Socket, 19 mm 07JAA-001020A
  or a commercially available 19 mm socket

Removal

1. Remove the front wheels.
2. Remove the front undercover and the splash shield (see step 21 on page 5-5).
3. Remove the drive belt (see page 10-10).
4. Hold the crankshaft pulley with the holder handle (A) and the holder attachment (B).

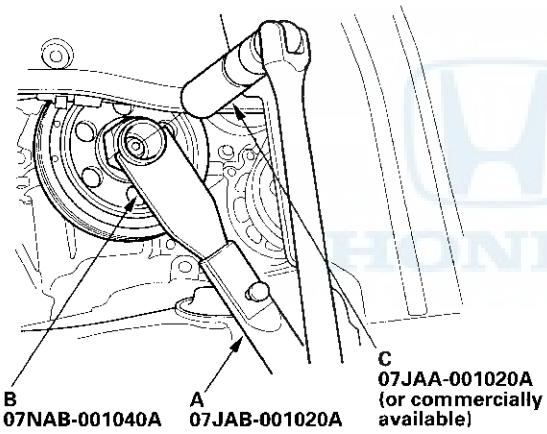

5. Remove the crankshaft pulley bolt with a 19 mm socket (C) and a breaker bar.
6. Remove the under-floor three way catalytic converter (TWC) (see step 39 on page 5-8).
7. Support the engine with a jack and a wood block under the oil pan.
8. Remove the lower torque rod mounting bolts (see step 48 on page 5-9).
9. Remove the crankshaft pulley while moving the engine forward.

Installation

1. Remove any oil and clean the crankshaft pulley (A), the crankshaft (B), the bolt (C), and the washer (D). Lubricate with new engine oil as shown.

○: Clean
●: Lubricate with new engine oil

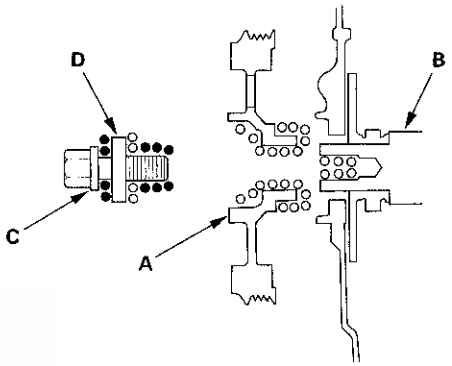

2. Install the crankshaft pulley while moving the engine forward and loosely install the crankshaft pulley.
3. Install the lower torque rod mounting bolts (see step 15 on page 5-15).
4. Remove the jack and the wood block.
5. Install the under-floor TWC (see step 26 on page 5-16).

6. Tighten the crankshaft pulley bolt. Do not use an impact wrench.

   -1 Hold the pulley with the holder handle (A) and the holder attachment (B), then tighten the bolt to 37 N·m (3.8 kgf·m, 27 lbf·ft) with a torque wrench and a heavy duty 19 mm socket (C). If the pulley bolt or crankshaft are new, tighten the bolt to 177 N·m (18.0 kgf·m, 130 lbf·ft), then remove the bolt and tighten it to 37 N·m (3.8 kgf·m, 27 lbf·ft).

   -2 Mark the bolt head (D) and the crankshaft pulley (E) as shown, then tighten the bolt an additional 90 ° (The mark on the bolt head lines up with the mark on the crankshaft pulley).

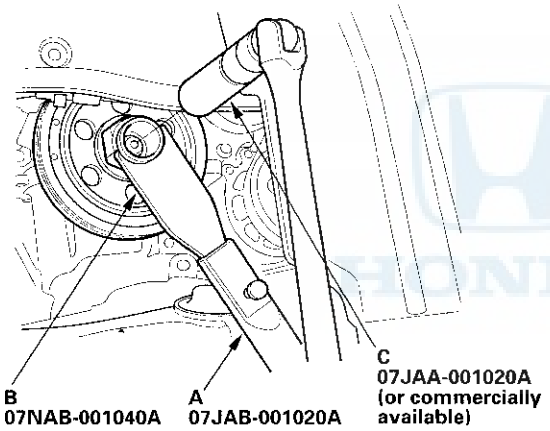

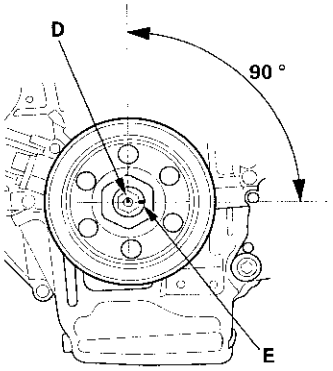

7. Install the drive belt (see page 10-10).

8. Install the splash shield and the front undercover (see step 27 on page 5-16).

9. Install the front wheels.

Cam Chain Removal

NOTE: Keep the cam chain away from magnetic fields.

1. Remove the front wheels.
2. Remove the front undercover and the splash shield (see step 21 on page 5-5).
3. Remove the drive belt (see page 10-10).
4. Turn the crankshaft pulley so its top dead center (TDC) mark (A) lines up with the pointer (B).

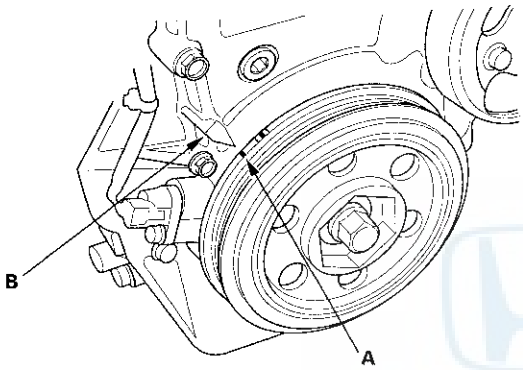

5. Remove the water pump pulley (see step 4 on page 10-5).
6. Remove the cylinder head cover (see page 6-22).
7. Remove the crankshaft pulley (see page 6-12).
8. Remove the oil pan (see page 7-11).
9. Support the engine with a jack and a wood block under the engine block.
10. Remove the ground cable (A), then remove the side engine mount bracket (B).

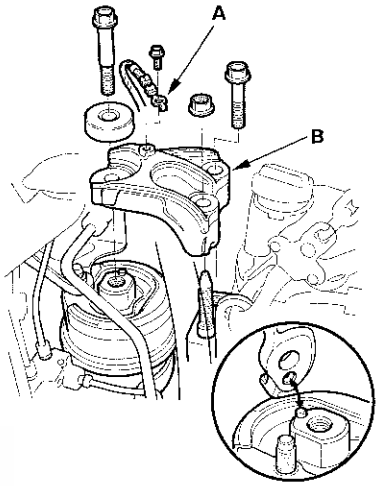

11. Disconnect the crankshaft position (CKP) sensor connector (A), then remove the dipstick tube mounting bolt (B) and the harness clamps (C).

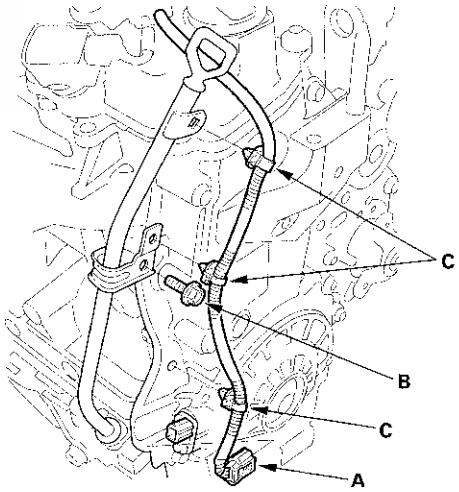

12. Remove the chain case (A), then remove the CKP pulse plate (B).

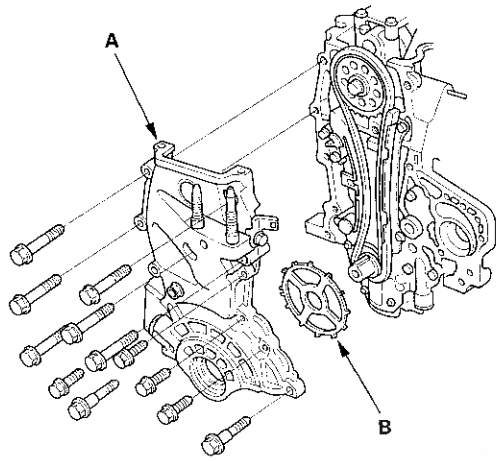

13. Measure the cam chain separation. If the distance is less than the service limit, replace the cam chain and the cam chain tensioner.

Standard Distance: **19 mm (0.75 in.)**
Service Limit: **15 mm (0.59 in.)**

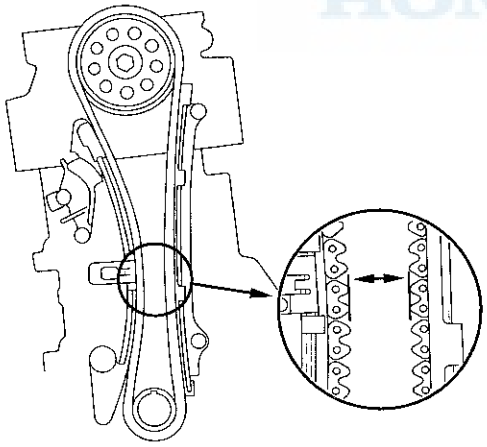

14. Apply new engine oil to the sliding surface of the cam chain tensioner slider (A).

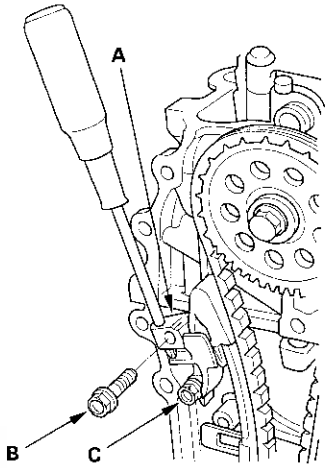

15. Hold the cam chain tensioner slider with a screwdriver, then remove the bolt (B), and loosen the bolt (C).

16. Remove the cam chain tensioner slider.

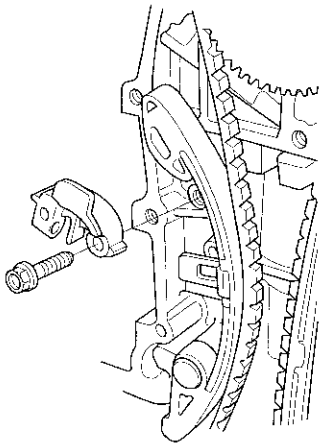

(cont'd)

Cam Chain Removal (cont'd)

17. Remove the cam chain tensioner (A) and the cam chain guide (B).

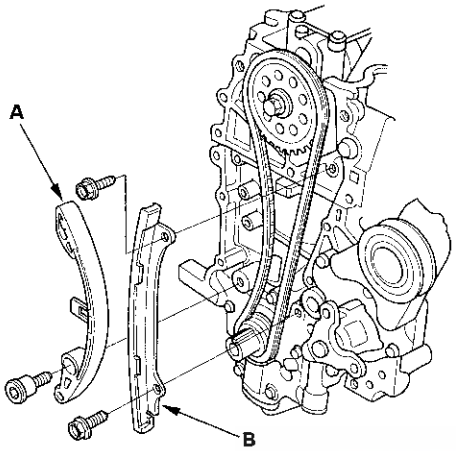

18. Remove the cam chain.

Cam Chain Installation

NOTE: Keep the cam chain away from magnetic fields.

1. Set the crankshaft to top dead center (TDC). Align the TDC mark (A) on the crankshaft sprocket with the pointer (B) on the oil pump.

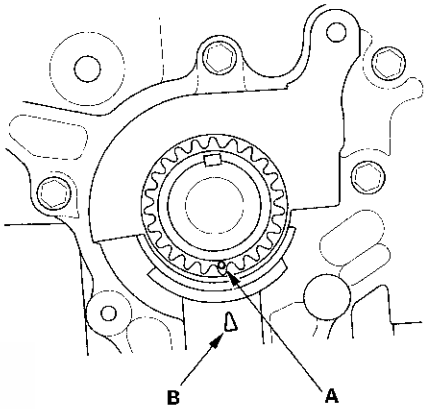

2. Set the No. 1 piston at TDC. The "UP" mark (A) on the camshaft sprocket should be at the top, and the TDC grooves (B) on the camshaft sprocket should line up with the top edge of the cylinder head.

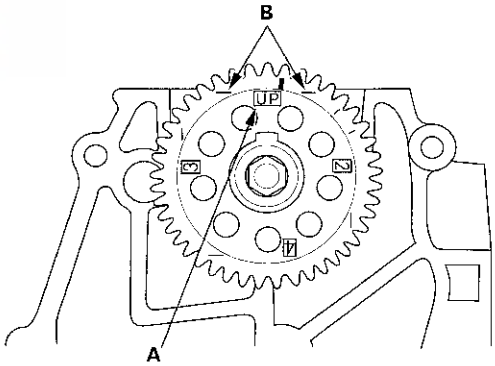

3. Install the cam chain on the crankshaft sprocket with the colored piece (A) aligned with the TDC mark (B) on the crankshaft sprocket.

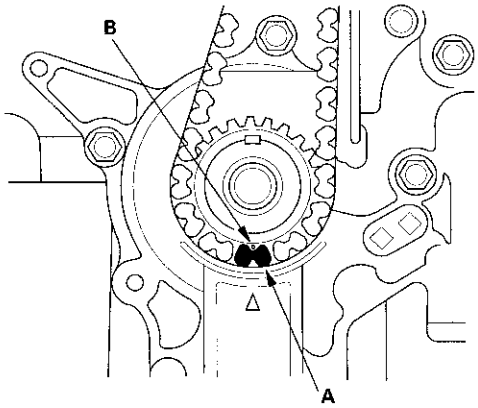

4. Install the cam chain on the camshaft sprocket with the pointer (A) aligned with the center of the two colored pieces (B).

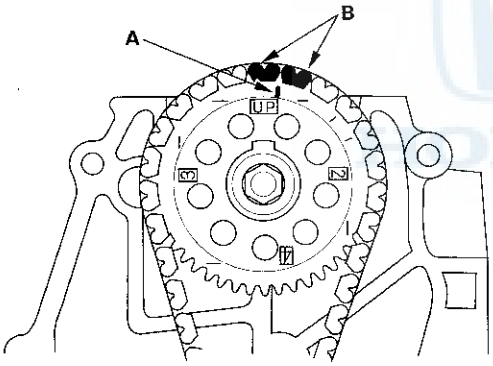

5. Apply new engine oil to the threads of the cam chain tensioner mounting bolt (A).

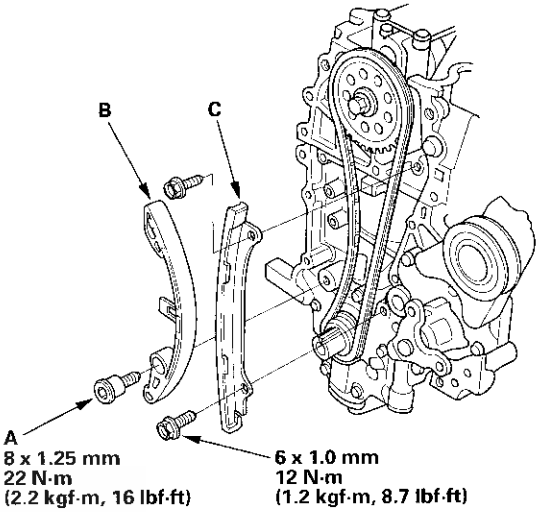

6. Install the cam chain tensioner (B) and the cam chain guide (C).

7. Install the cam chain tensioner slider, and tighten the lower side bolt loosely.

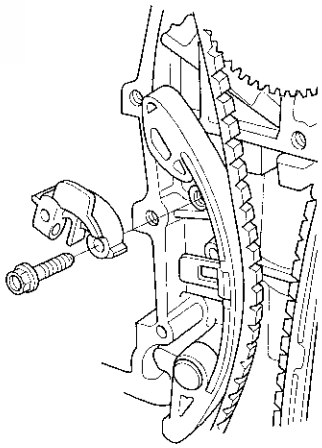

(cont'd)

Cam Chain Installation (cont'd)

8. Apply new engine oil to the sliding surface of the cam chain tensioner slider (A).

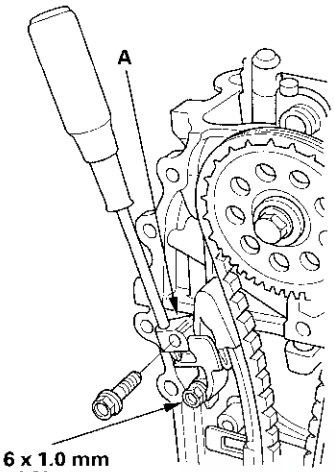

9. Turn the cam chain tensioner clockwise to compress the cam chain tensioner slider. Install the remaining bolt, then tighten the two bolts.

10. Check the chain case oil seal for damage. If the oil seal is damaged, replace the chain case oil seal (see page 6-20).

11. Remove all of the old liquid gasket from the chain case mating surfaces, the bolts, and the bolt holes.

12. Clean and dry the chain case mating surfaces.

13. Apply liquid gasket, P/N 08717-0004, 08718-0001, 08718-0003, or 08718-0009, evenly to the cylinder head and the engine block mating surface of the chain case. Install the component within 5 minutes of applying the liquid gasket.

NOTE:
- Apply a 1.5 mm wide bead of liquid gasket along the broken lines (A).
- Apply a 3.0 mm wide bead of liquid gasket to the engine block upper surface contact areas (B) on the chain case.
- If you apply liquid gasket P/N 08718-0012, the component must be installed within 4 minutes.
- If too much time has passed after applying the liquid gasket, remove the old liquid gasket and residue, then reapply new liquid gasket.

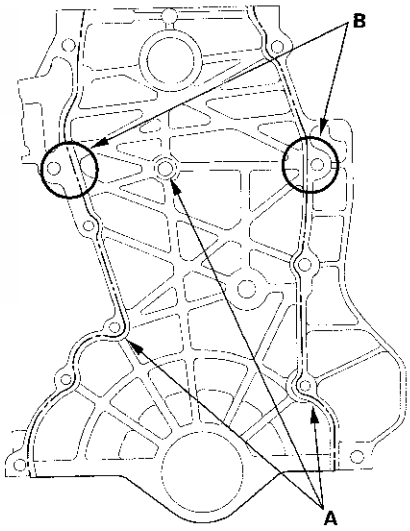

14. Install the crankshaft position (CKP) pulse plate (A) and the chain case (B).

NOTE:
- Wait at least 30 minutes before filling the engine with oil.
- Do not run the engine for at least 3 hours after installing the chain case.

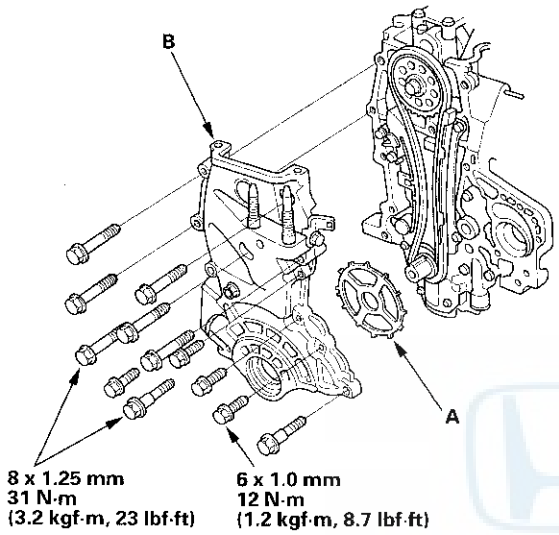

15. Install the harness clamps (A) and the dipstick tube mounting bolt (B), then connect the CKP sensor connector (C).

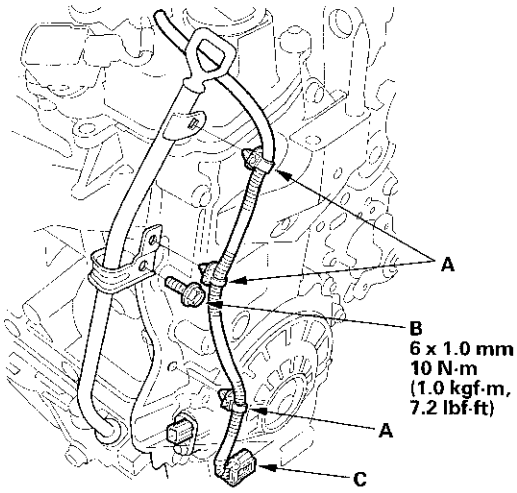

16. Install the side engine mount bracket (A), then tighten the mounting bolts and nut in the numbered sequence shown.

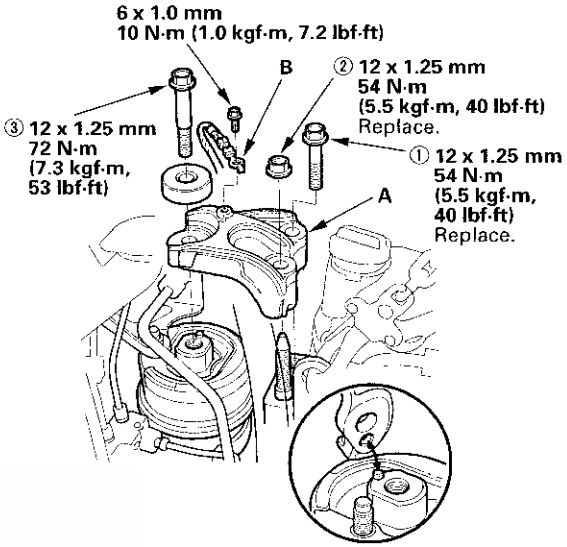

17. Install the ground cable (B).

18. Remove the jack and the wood block.

19. Install the oil pan (see page 7-27).

20. Install the crankshaft pulley (see page 6-12).

21. Install the cylinder head cover (see page 6-22).

22. Install the water pump pulley (see step 4 on page 10-5).

23. Install the drive belt (see page 10-10).

24. Install the splash shield and the front undercover (see step 27 on page 5-16).

25. Install the front wheels.

26. Do the crankshaft position (CKP) pattern clear/CKP pattern learn procedure (see page 11-4).

Chain Case Oil Seal Installation

Special Tools Required
- Driver 07749-0010000
- Attachment, 52 x 55 mm 07746-0010400

1. Use the driver and the attachment to drive a new oil seal squarely into the chain case to the specified installed height.

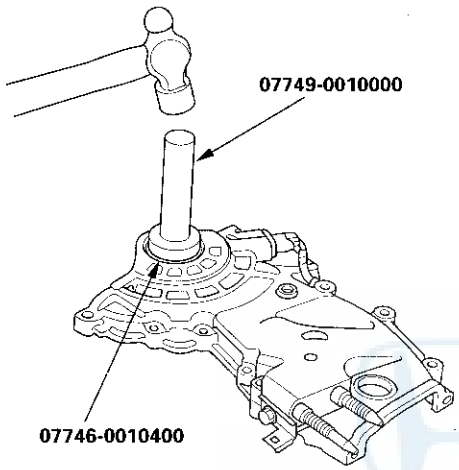

2. Measure the distance between the chain case surface (A) and the oil seal (B).

Oil Seal Installed Height:
34.5—35.2 mm (1.36—1.39 in.)

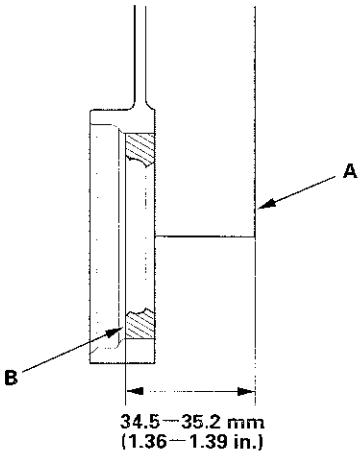

CKP Pulse Plate Replacement

1. Remove the front wheels.
2. Remove the front undercover and the splash shield (see step 21 on page 5-5).
3. Remove the drive belt (see page 10-10).
4. Turn the crankshaft pulley so its top dead center (TDC) mark lines up with the pointer (see step 2 on page 6-10).
5. Remove the water pump pulley (see step 4 on page 10-5).
6. Remove the cylinder head cover (see page 6-22).
7. Remove the crankshaft pulley (see page 6-12).
8. Remove the oil pan (see page 7-11).
9. Support the engine with a jack and a wood block under the engine block.
10. Remove the ground cable, then remove the side engine mount bracket (see step 10 on page 6-14).
11. Disconnect the crankshaft position (CKP) sensor connector, then remove the harness clamp and the dipstick tube mounting bolt (see step 11 on page 6-14).
12. Remove the chain case (see step 12 on page 6-15).
13. Remove the CKP pulse plate (A).

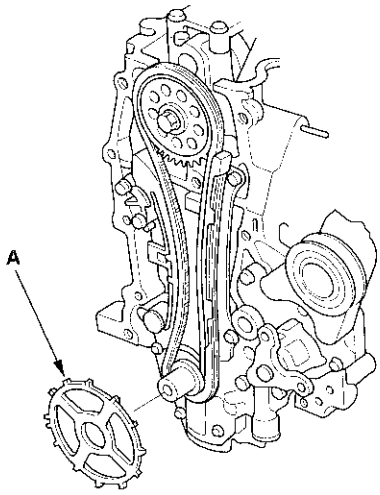

14. Install the CKP pulse plate.
15. Check the chain case oil seal for damage. If the oil seal is damaged, replace the chain case oil seal (see page 6-20).
16. Remove all of the old liquid gasket from the chain case mating surfaces, the bolt, and the bolt holes.
17. Clean and dry the chain case mating surfaces.
18. Apply liquid gasket, P/N 08717-0004, 08718-0001, 08718-0003 or 08718-0009, evenly to the cylinder head and the engine block mating surface of the chain case. Install the component within 5 minutes of applying the liquid gasket (see step 13 on page 6-18).

    NOTE:
    - If you apply liquid gasket P/N 08718-0012, the component must be installed within 4 minutes.
    - If too much time has passed after applying the liquid gasket, remove the old liquid gasket and residue, then reapply new liquid gasket.
19. Install the chain case (see step 14 on page 6-19).
20. Install the harness clamps and the dipstick tube mounting bolt, then connect the CKP sensor connector (see step 15 on page 6-19).
21. Install the side engine mount bracket, then install the ground cable (see step 16 on page 6-19).
22. Remove the jack and the wood block.
23. Install the oil pan (see page 7-27).
24. Install the crankshaft pulley (see page 6-12).
25. Install the cylinder head cover (see page 6-22).
26. Install the water pump pulley (see step 4 on page 10-5).
27. Install the drive belt (see page 10-10).
28. Install the splash shield and the front undercover (see step 27 on page 5-16).
29. Install the front wheels.
30. Do the crankshaft (CKP) pattern clear/CKP pattern learn procedure (see page 11-4).

Cylinder Head Cover Removal

1. Remove the engine cover (see step 6 on page 5-3).
2. Remove the eight ignition coils (see page 4-20).
3. Remove the harness holder (A) and disconnect the breather hose (B).

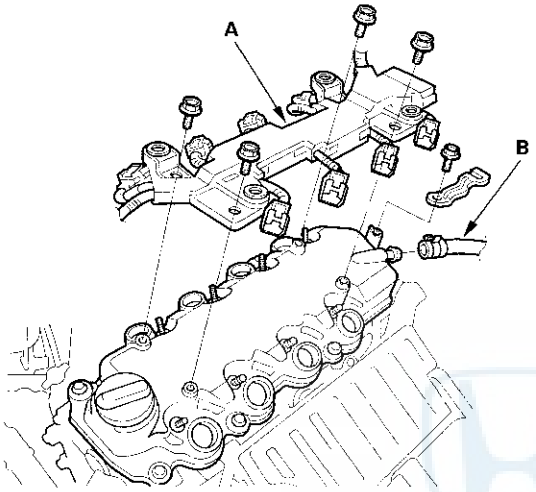

4. Remove the cylinder head cover.

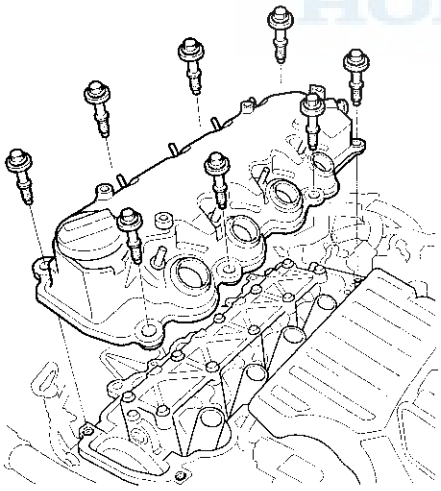

Cylinder Head Cover Installation

1. Check the spark plug seals (A) for damage. If the seal is damaged, replace the spark plug seals.

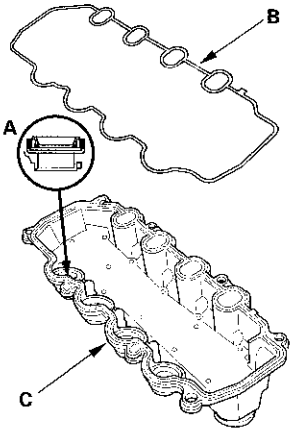

2. Thoroughly clean the head cover gasket (B) and the groove.
3. Install the head cover gasket in the groove of the cylinder head cover (C).
4. Check that the mating surfaces are clean and dry.
5. Apply a 3.0 mm wide bead of the liquid gasket, P/N 08717-0004, 08718-0001, 08718-0003, or 08718-0009, on the chain case mating areas (A). Install the component within 5 minutes of applying the liquid gasket.

   NOTE:
   - If you apply liquid gasket P/N 08718-0012, the component must be installed within 4 minutes.
   - If too much time has passed after applying the liquid gasket, remove the old liquid gasket and residue, then reapply new liquid gasket.

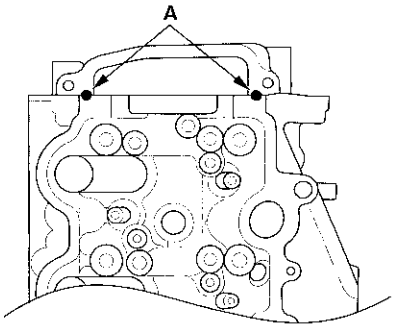

6. Once the cylinder head cover (A) is on the cylinder head, slide the cover slightly back and forth to seat the head cover gasket.

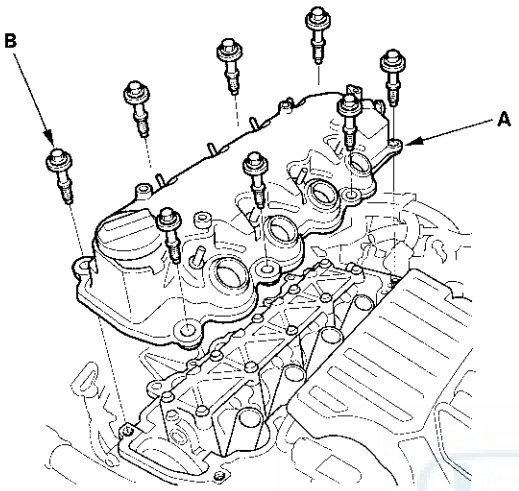

7. Inspect the cover washer (B). Replace any washer that is damaged or deteriorated.

8. Tighten the bolts in three steps. In the final step, tighten all bolts in sequence shown to 12 N·m (1.2 kgf·m, 8.7 lbf·ft).

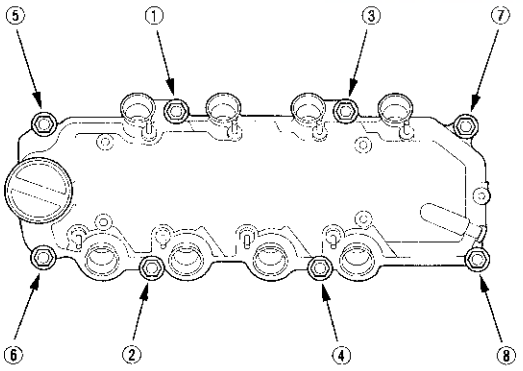

9. Connect the breather hose (A) and install the harness holder (B).

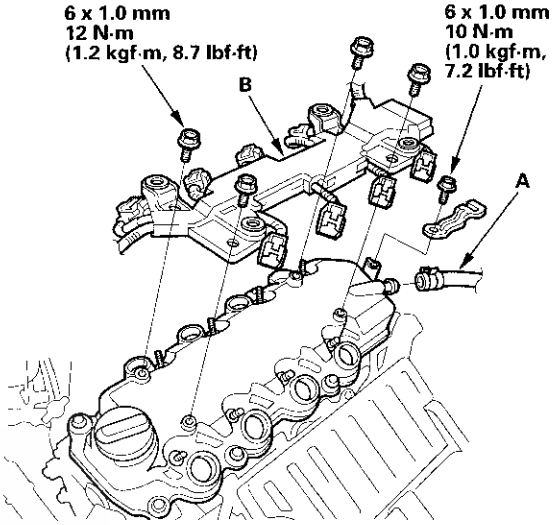

10. Install the eight ignition coils (see page 4-20).

11. Install the engine cover (see step 53 on page 5-21).

12. After assembly, wait at least 30 minutes before filling the engine with oil.

Cylinder Head Removal

NOTE:
- Use fender covers to avoid damaging the painted surfaces.
- To avoid damaging the wire and terminals, unplug the wiring connectors carefully while holding the connector portion.
- Connect the Honda Diagnostic System (HDS) to the data link connector (DLC), and monitor the engine coolant temperature (ECT) sensor 1. To avoid damaging the cylinder head, wait until the ECT 1 temperature drops below 100 °F (38 °C) before loosening the cylinder head bolts.
- Mark all wiring and hoses to avoid misconnection. Also, be sure that they do not contact other wiring or hoses, or interfere with other parts.
- Keep the cam chain away from magnetic fields.

1. Relieve the fuel pressure (see page 11-345).
2. Remove the engine cover (see step 6 on page 5-3).
3. Drain the engine coolant (see page 10-6).
4. Remove the air cleaner assembly (see page 11-370).
5. Remove the intake manifold (see page 9-3).
6. Disconnect the knock sensor connector (A), then remove the harness clamp (B) and the connecting pipe (C).

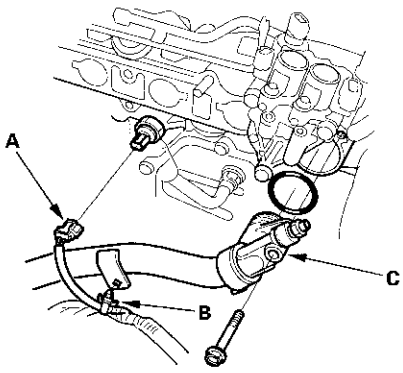

7. Disconnect the camshaft position (CMP) sensor (A) and the ECT sensor 1 connector (B), then remove the harness clamp (C).

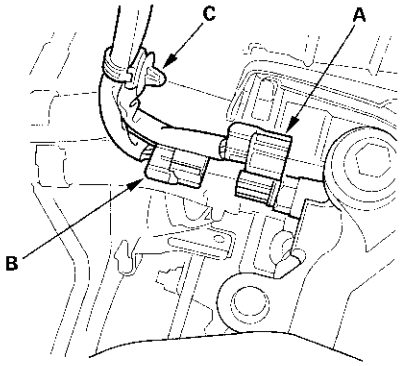

8. Remove the eight ignition coils (see page 4-20).
9. Remove the harness holder and disconnect the breather hose (see step 3 on page 6-22).
10. Disconnect the evaporative emission (EVAP) canister purge valve connector, then remove the harness clamp (see step 15 on page 5-5).
11. Disconnect the purge joint from the bracket, then remove the fuel pipe nut and remove the EVAP canister purge valve bracket bolts (see step 16 on page 5-5).
12. Disconnect the upper radiator hose (A), the lower radiator hose (B), the water bypass hose (C), and the heater hoses (D).

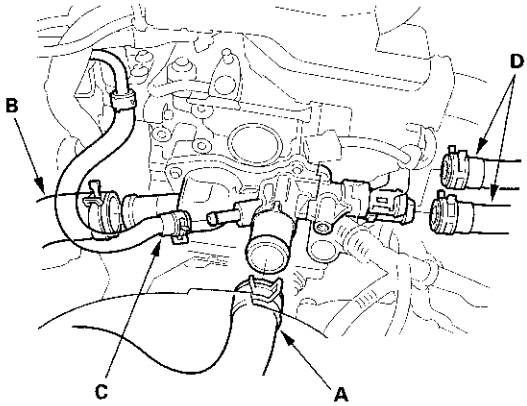

13. Remove the drive belt (see page 10-10).

14. Turn the crankshaft pulley so its top dead center (TDC) mark lines up with the pointer (see step 4 on page 6-14).

15. Remove the water pump (see page 10-5).

16. Remove the cylinder head cover (see page 6-22).

17. Remove the warm-up three way catalytic converter (WU-TWC) (see page 11-377).

18. Remove the crankshaft pulley (see page 6-12).

19. Support the engine with a jack and a wood block under the oil pan.

20. Remove the ground cable, then remove the side engine mount bracket (see step 10 on page 6-14).

21. Disconnect the crankshaft position (CKP) sensor (A) and the harness clamp (B), then remove the dipstick tube (C).

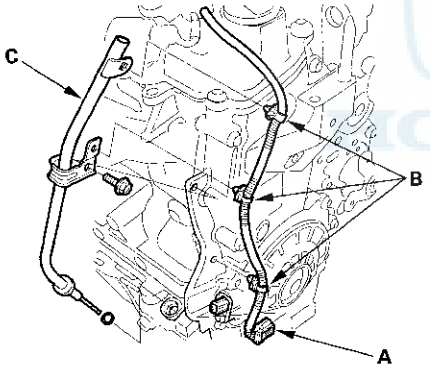

22. Remove the chain case.

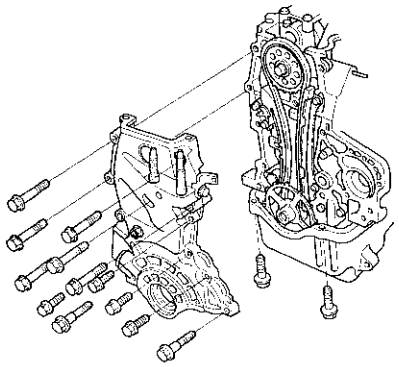

23. Make a reference mark (A) across the camshaft sprocket and the cam chain.

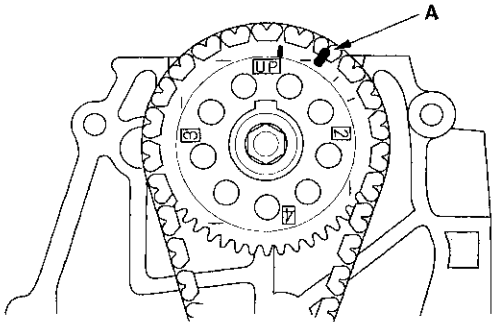

24. Loosely install the crankshaft pulley.

25. Apply new engine oil to the sliding surface of the cam chain tensioner through the oil return hole in the cylinder head.

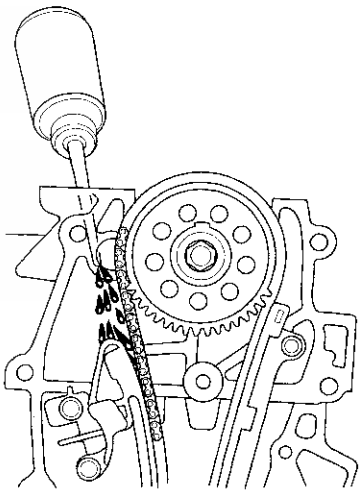

(cont'd)

Cylinder Head Removal (cont'd)

26. Hold the crankshaft pulley and set the socket wrench (A) on the camshaft sprocket bolt.

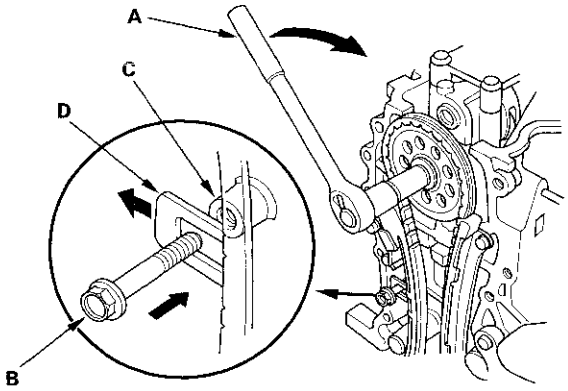

27. Turn the camshaft clockwise to compress the cam chain tensioner, then install the 6 x 1.0 mm bolt (B) in the bolt hole (C) in the engine block through the cam chain tensioner (D).

    NOTE:
    - Turning torque should not exceed 44 N·m (4.5 kgf·m, 33 lbf·ft) when turning the camshaft.
    - Do not turn the camshaft counterclockwise.

28. Hold the camshaft with a 27 mm open-end wrench, then remove the camshaft sprocket.

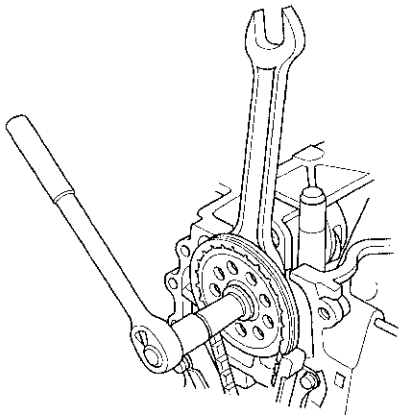

29. Remove the top bolt that secures the cam chain guide.

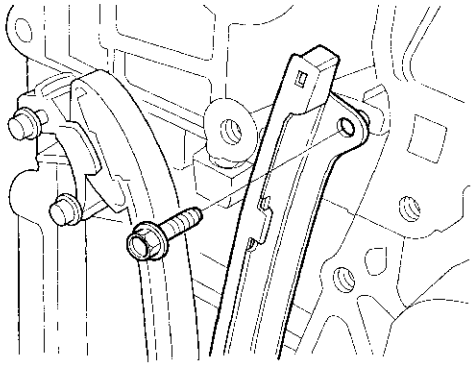

30. Remove the cylinder head bolts. To prevent warpage, loosen the bolts in sequence 1/3 turn at a time; repeat the sequence until all bolts are loosened.

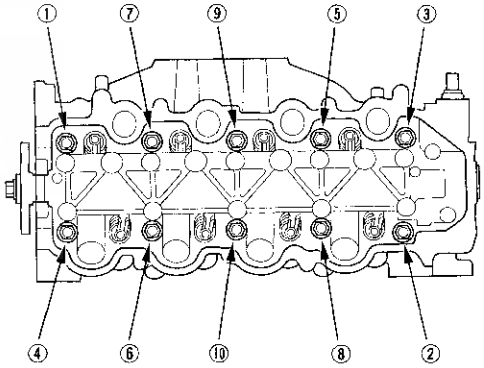

31. Remove the cylinder head.

Camshaft Sprocket Removal

NOTE: Keep the cam chain away from magnetic fields.

1. Remove the cylinder head cover (see page 6-22).

2. Make a reference mark (A) across the camshaft sprocket and the cam chain.

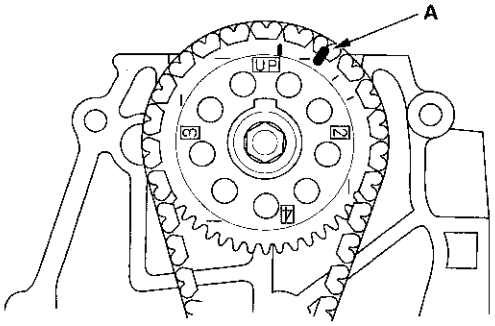

3. Apply new engine oil to the sliding surface of the cam chain tensioner through the oil return hole in the cylinder head.

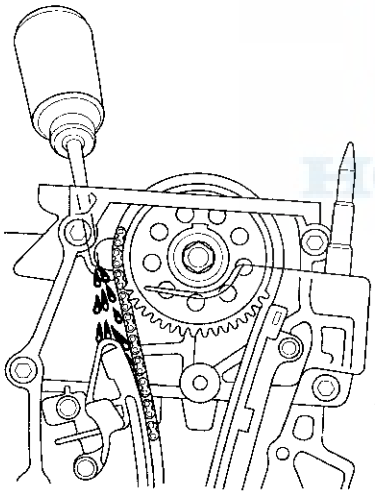

4. Remove the cylinder head plug.

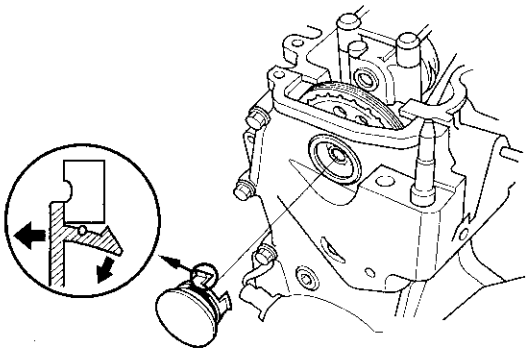

5. Hold the crankshaft pulley and set the socket wrench (A) on the camshaft sprocket bolt.

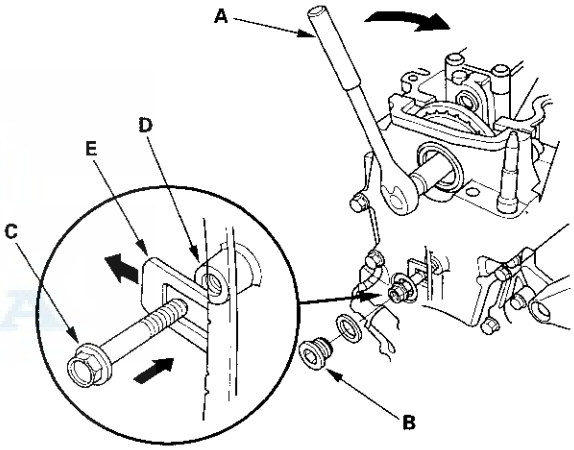

6. Remove the maintenance bolt (B), and turn the camshaft clockwise to compress the cam chain tensioner, then install the 6 x 1.0 mm bolt (C) in the bolt hole (D) in the engine block through the maintenance hole and the cam chain tensioner (E).

   NOTE:
   - Turning torque should not exceed 44 N·m (4.5 kgf·m, 33 lbf·ft) when turning the camshaft.
   - Do not turn the camshaft counterclockwise.

(cont'd)

Camshaft Sprocket Removal (cont'd)

7. Hold the camshaft with a 27 mm open-end wrench, then loosen the camshaft sprocket bolt.

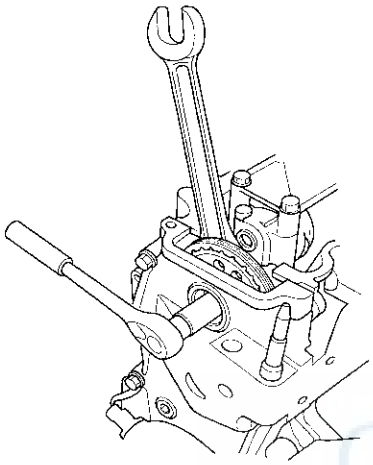

8. Remove the camshaft sprocket bolt, then remove the camshaft sprocket.

   NOTE: Hang the cam chain with a wire.

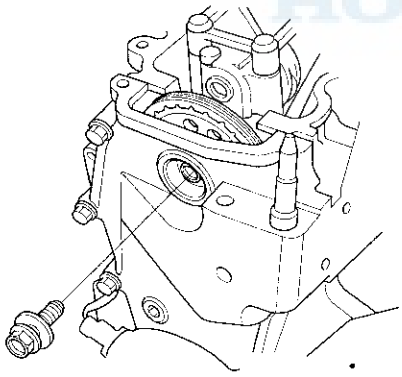

Camshaft Sprocket Installation

NOTE: Keep the cam chain away from magnetic fields.

1. Install the cam chain around the camshaft sprocket aligned with the reference mark (A), then install the camshaft sprocket on the camshaft.

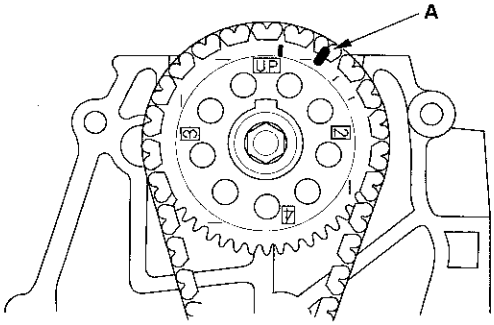

2. Hold the camshaft with a 27 mm open-end wrench, then tighten the bolt.

   NOTE: Apply new engine oil to the bolt threads and flange.

   Specified Torque: 56 N·m (5.7 kgf·m, 41 lbf·ft)

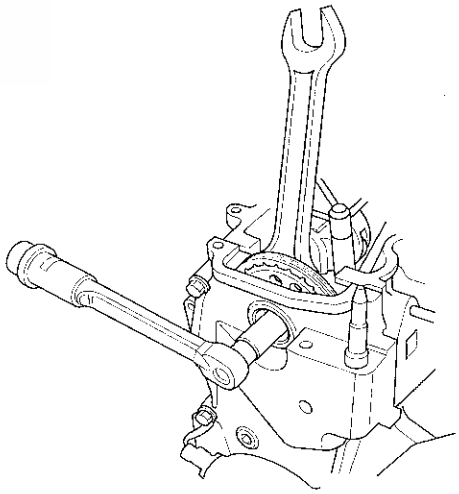

3. Apply new engine oil to the sliding surface of the cam chain tensioner through the oil return hole in the cylinder head.

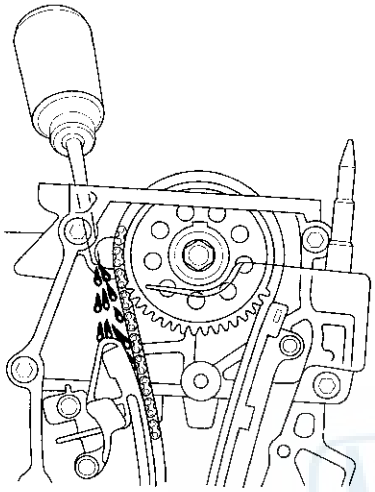

4. Hold the crankshaft pulley and set the socket wrench (A) on the camshaft sprocket bolt.

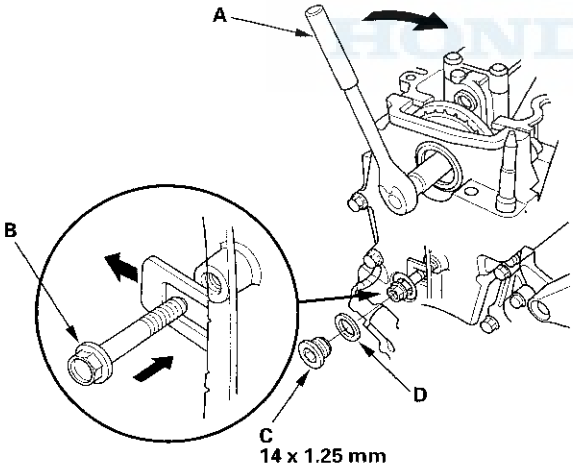

14 x 1.25 mm
20 N·m (2.0 kgf·m, 15 lbf·ft)

5. Turn the camshaft clockwise to compress the cam chain tensioner, then remove the 6 x 1.0 mm bolt (B).

   NOTE:
   - Turning torque should not exceed 44 N·m (4.5 kgf·m, 33 lbf·ft) when turning the camshaft.
   - Do not turn the camshaft counterclockwise.

6. Install the maintenance bolt (C) with a new washer (D).

7. Install the new cylinder head plug.

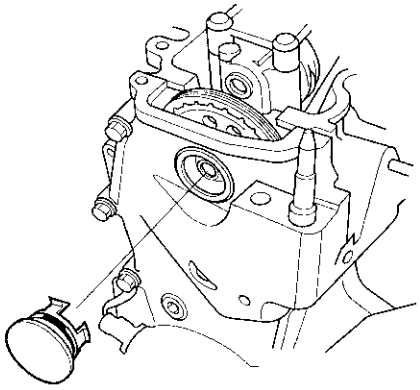

8. Install the cylinder head cover (see page 6-22).

CMP Pulse Plate Removal and Installation

Removal

1. Remove the air cleaner assembly (see page 11-370).
2. Remove the cylinder head cover (see page 6-22).
3. Remove the evaporative emission (EVAP) canister purge valve bracket (see step 16 on page 5-5).
4. Remove the cylinder head plug.

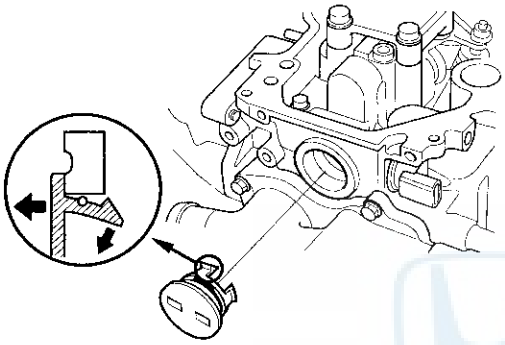

5. Hold the camshaft with a 27 mm open-end wrench, then loosen the bolt.

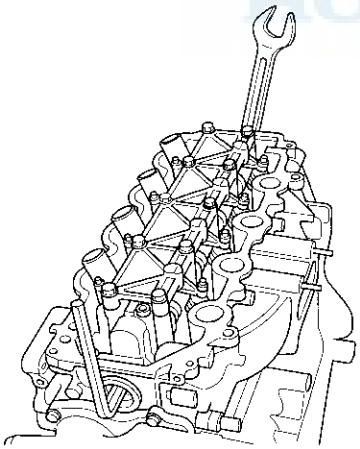

6. Remove the camshaft position (CMP) pulse plate.

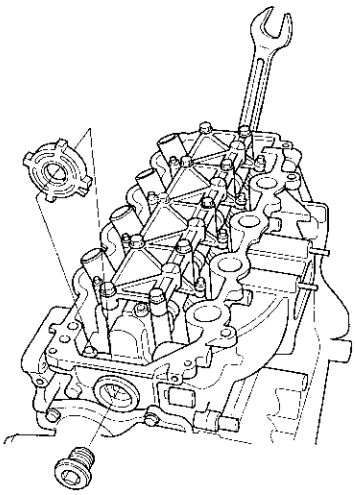

Installation

1. Install the CMP pulse plate (A). Hold the camshaft with a 27 mm open-end wrench (B), then tighten the bolt (C).

   NOTE: Apply new engine oil to the bolt threads.

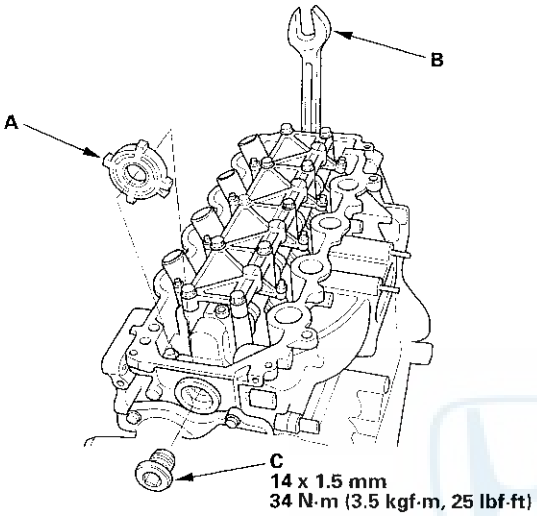

2. Install the new cylinder head plug.

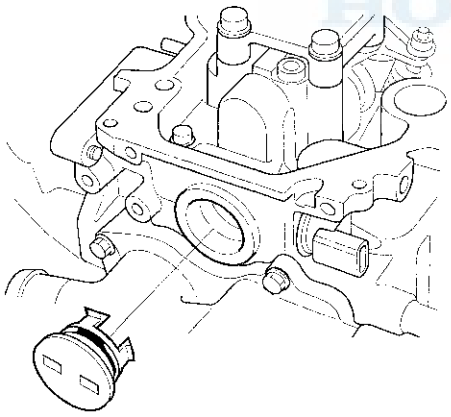

3. Install the EVAP canister purge valve bracket (see step 43 on page 5-19).

4. Install the cylinder head cover (see page 6-22).

5. Install the air cleaner assembly (see page 11-370).

Cylinder Head Inspection for Warpage

1. Remove the cylinder head (see page 6-24).

2. Inspect the camshaft (see page 6-35).

3. Check the cylinder head for warpage. Measure along the edges, and three ways across the center.

   Warpage
   Standard (New): 0.07 mm (0.0028 in.)
   Service Limit: 0.08 mm (0.0031 in.)

   - If warpage is less than 0.08 mm (0.0031 in.) cylinder head resurfacing is not required.
   - If warpage is between 0.08 mm (0.0031 in.) and 0.2 mm (0.008 in.), resurface the cylinder head.
   - Maximum resurface limit is 0.2 mm (0.008 in.) based on a height of 120 mm (4.72 in.).

   Cylinder Head Height
   Standard (New): 119.9—120.1 mm (4.720—4.728 in.)

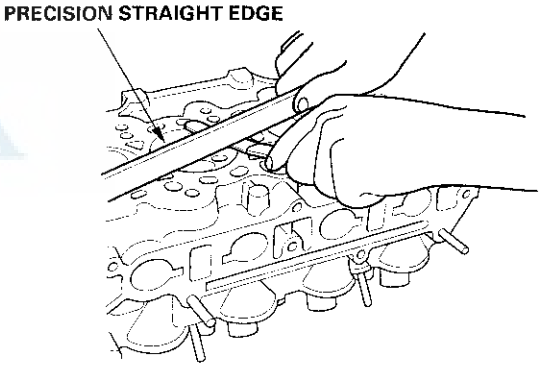

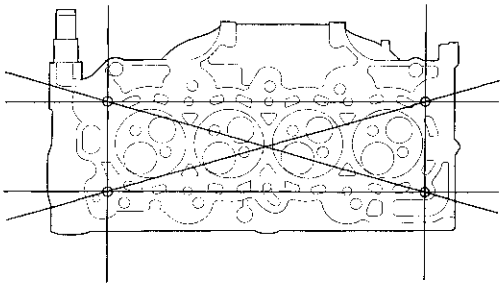

Rocker Arm Assembly and Camshaft Removal

1. Remove the camshaft sprocket (see page 6-27).
2. Loosen the locknuts and the adjusting screws (A).

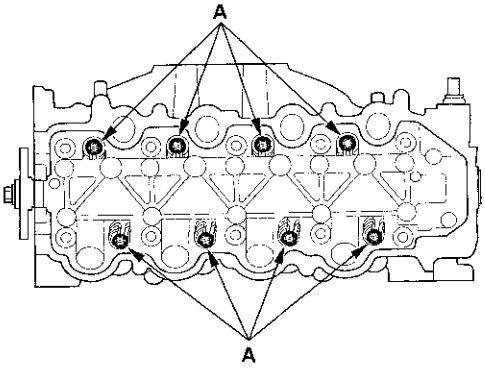

3. Remove the lost motion holder bolts and the camshaft holder bolts. To prevent damaging the camshaft, loosen the bolts in sequence two turns at a time, in a crisscross pattern.

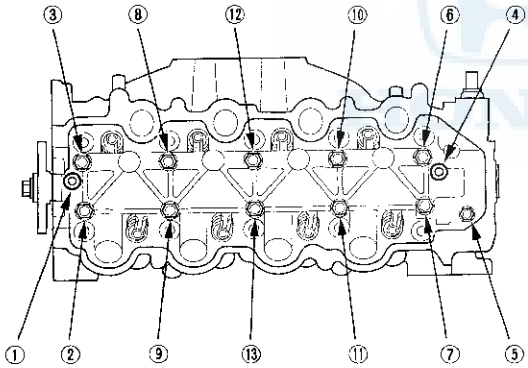

4. Remove the lost motion holder (A), the lost motion assembly (B), and the rocker arm assembly (C), then remove the camshaft (D).

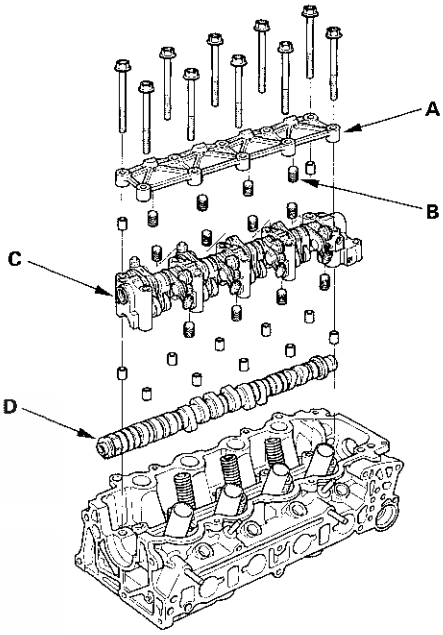

Rocker Arm and Shaft Disassembly/Reassembly

NOTE:
- Identify parts as they are removed so they can be reinstalled in their original location.
- Remove the rocker shaft bolts before disassembling the rocker arms.
- Inspect the rocker shaft and the rocker arms (see page 6-34).
- If reused, the rocker arms must be installed in their original location.
- Prior to reassembling, clean all the parts in solvent, dry them, and apply new engine oil to any contact points.
- Apply new engine oil to the threads of the rocker shaft bolts when installing them.
- When replacing the rocker arm assembly, remove the fastening hardware from the new rocker arm assembly.

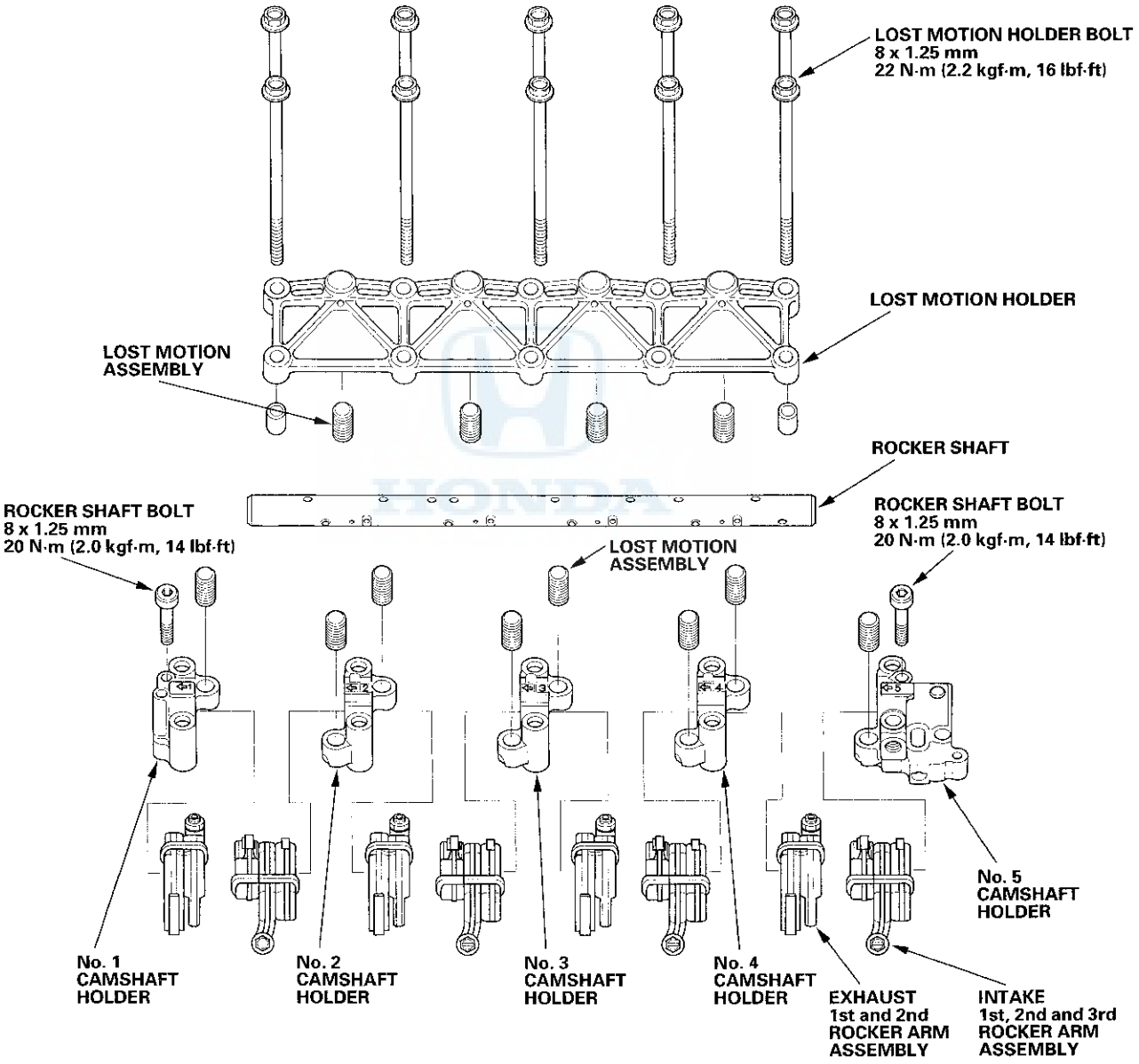

Rocker Arm and Shaft Inspection

1. Remove the rocker arm assembly (see page 6-32).
2. Disassemble the rocker arm assembly (see page 6-33).
3. Measure the diameter of the shaft at the first rocker location.

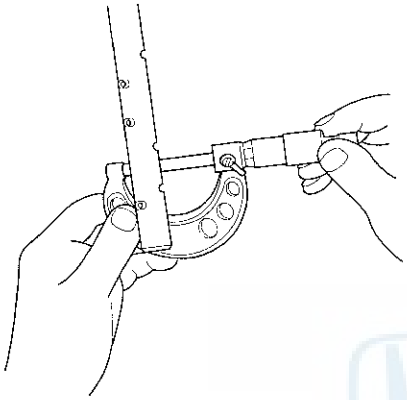

4. Zero the gauge (A) to the shaft diameter.

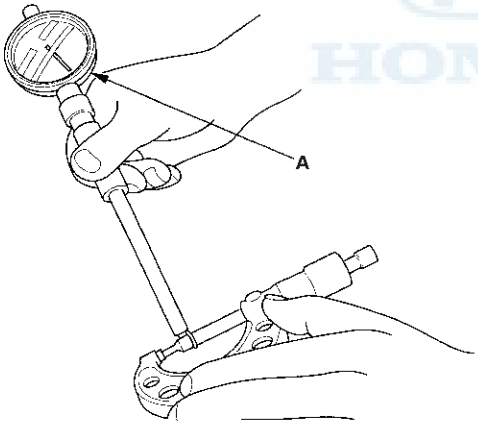

5. Measure the inside diameter of the rocker arm, and check it for an out-of-round condition.

Rocker Arm-to-Shaft Clearance
Standard (New): 0.017—0.045 mm (0.0003—0.0018 in.)
Service Limit: 0.067 mm (0.0026 in.)

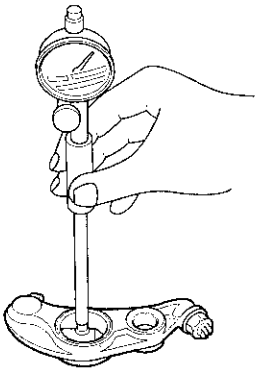

6. Repeat for all the rockers and both shafts. If the clearance is over the limit, replace the rocker shaft and all over-tolerance rocker arms. If any rocker arm needs replacement, replace all five rocker arms in that set (intake 1st, 2nd, 3rd, exhaust 1st and 2nd).

Rocker Arms

7. Inspect the rocker arm pistons (A). Slide them into the rocker arms. If they do not move smoothly, replace the rocker arm set.

   NOTE:
   - Apply new engine oil to the rocker arm pistons when reassembling.
   - When reassembling the intake 1st and exhaust 1st rocker arms (B), carefully apply air pressure to the oil passage of the rocker arm.

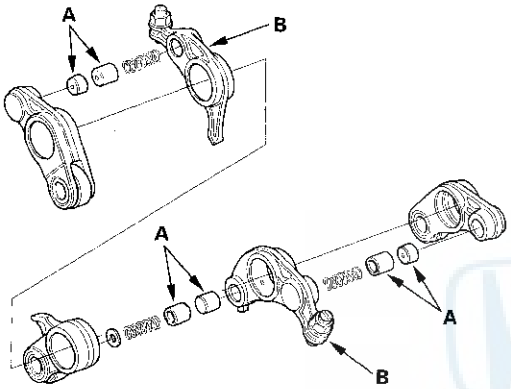

8. Reassemble the rocker arm assembly (see page 6-33).

9. Install the rocker arm assembly (see page 6-45).

Camshaft Inspection

NOTE: Do not rotate the camshaft during inspection.

1. Remove the rocker arm assembly (see page 6-32).

2. Put the camshaft, the camshaft holders, and the lost motion holder on the cylinder head, then tighten the bolts to the specified torque.

   Specified Torque
   8 mm Bolts:
   22 N·m (2.2 kgf·m, 16 lbf·ft)
   Apply new engine oil to the bolt threads and flange.
   8 mm Bolts: ⑪ ⑬
   20 N·m (2.0 kgf·m, 14 lbf·ft)
   Apply new engine oil to the bolt threads and flange.
   6 mm Bolt: ⑫
   12 N·m (1.2 kgf·m, 8.7 lbf·ft)
   Apply new engine oil to the bolt threads and flange.

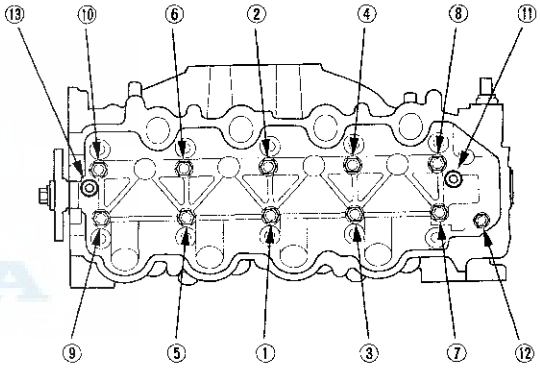

(cont'd)

Camshaft Inspection (cont'd)

3. Seat the camshaft by pushing it away from the camshaft pulley end of the cylinder head.

4. Zero the dial indicator against the end of the camshaft, then push the camshaft back and forth and read the end play. If the end play is beyond the service limit, replace the cylinder head and recheck. If it is still beyond the service limit, replace the camshaft.

   Camshaft End Play
   Standard (New): 0.05—0.15 mm (0.002—0.006 in.)
   Service Limit: 0.3 mm (0.01 in.)

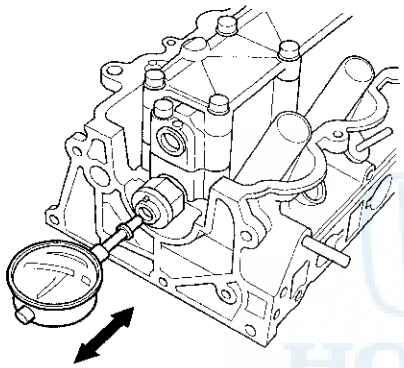

5. Loosen the lost motion holder bolts and the camshaft holder bolts two turns at a time, in a crisscross pattern. Then remove the lost motion holder and the camshaft holders from the cylinder head.

6. Lift the camshaft out of the cylinder head, wipe it clean, then inspect the lift ramps. Replace the camshaft if any lobes are pitted, scored, or excessively worn.

7. Clean the camshaft journal surfaces in the cylinder head, then set the camshaft back in place. Place a plastigage strip across each journal.

8. Install the camshaft holders, then tighten the bolts to the specified torque as shown in step 2.

9. Remove the camshaft holders. Measure the widest part of plastigage on each journal.

   - If the camshaft-to-holder clearance is within limits, go to step 11.
   - If the camshaft-to-holder clearance is beyond the service limit and the camshaft has been replaced, replace the cylinder head.
   - If the camshaft-to-holder clearance is beyond the service limit and the camshaft has not been replaced, go to step 10.

   Camshaft-to-Holder Oil Clearance
   Standard (New): 0.050—0.089 mm (0.0020—0.0035 in.)
   Service Limit: 0.15 mm (0.006 in.)

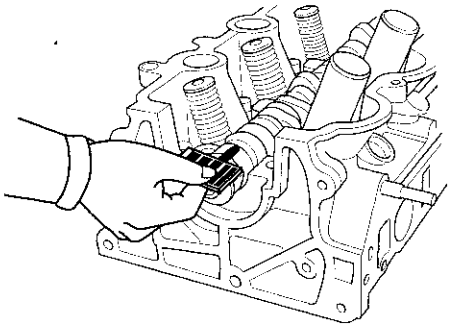

10. Check the total runout with the camshaft supported on V-blocks.

- If the total runout of the camshaft is within the service limit, replace the cylinder head.
- If the total runout is beyond the service limit, replace the camshaft and recheck the camshaft-to-holder oil clearance. If the oil clearance is still beyond the service limit, replace the cylinder head.

Camshaft Total Runout
Standard (New): 0.03 mm (0.001 in.) max.
Service Limit: 0.04 mm (0.002 in.)

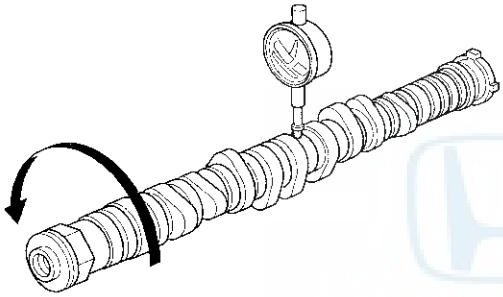

11. Measure the cam lobe height.

Cam Lobe Height Standard (New):

	INTAKE	EXHAUST
2nd	35.568 mm (1.4003 in.)	35.699 mm (1.4054 in.)
3rd	36.060 mm (1.4196 in.)	———
1st	29.700 mm (1.1692 in.)	29.900 mm (1.1771 in.)

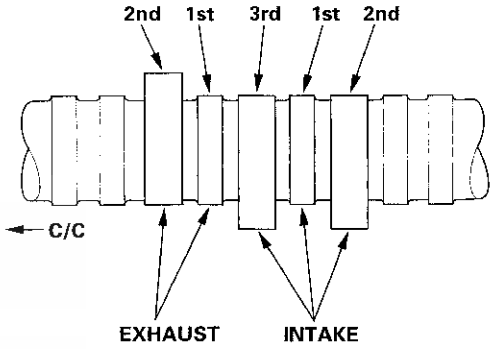

Valve, Spring, and Valve Seal Removal

Special Tools Required
Valve spring compressor attachment 07757-PJ1010A

Identify the valves and valve springs as they are removed so that each item can be reinstalled in its original position.

1. Remove the cylinder head (see page 6-24).

2. Remove the rocker arm assembly and the camshaft (see page 6-32).

3. Using an appropriate-sized socket (A) and a plastic mallet (B), lightly tap the spring retainer to loosen the valve cotters.

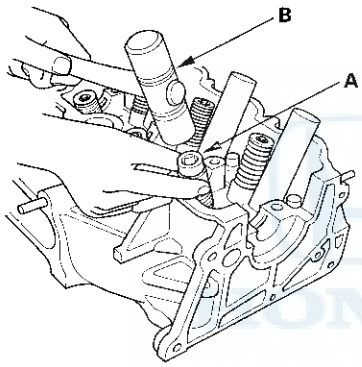

4. Install the valve spring compressor attachment and the valve spring compressor. Compress the valve spring and remove the valve cotters.

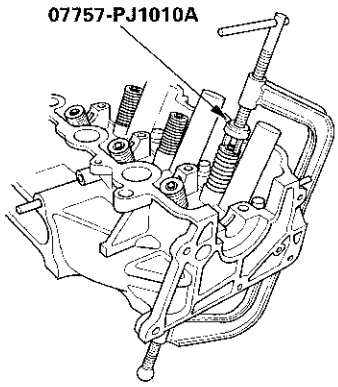

5. Remove the valve spring compressor, the valve spring compressor attachment, the spring retainer, the valve spring and the valve.

6. Install the valve guide seal remover.

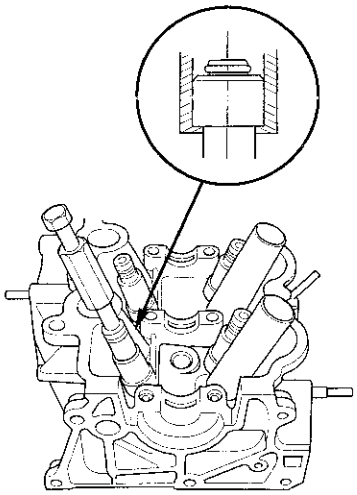

7. Remove the valve seal.

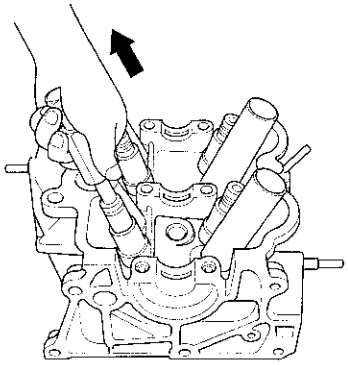

8. Remove the valve spring seat.

Valve Inspection

1. Remove the valves (see page 6-38).

2. Measure the valve in these areas.

Intake Valve Dimensions
A Standard (New): 34.85—35.15 mm (1.372—1.383 in.)
B Standard (New): 117.65—118.15 mm (4.632—4.652 in.)
C Standard (New): 5.48—5.49 mm (0.2157—0.2161 in.)
C Service Limit: 5.45 mm (0.215 in.)

Exhaust Valve Dimensions
A Standard (New): 29.85—30.15 mm (1.175—1.187 in.)
B Standard (New): 117.75—118.25 mm (4.635—4.659 in.)
C Standard (New): 5.45—5.46 mm (0.2146—0.2150 in.)
C Service Limit: 5.42 mm (0.213 in.)

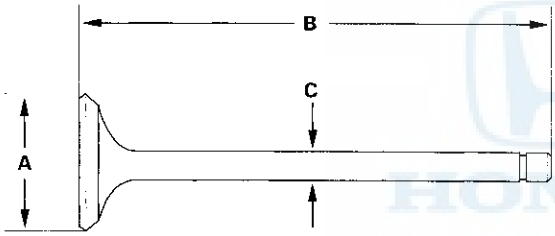

Valve Stem-to-Guide Clearance Inspection

1. Remove the valves (see page 6-38).

2. Slide the valve out of its guide about 10 mm (0.39 in.), then measure the stem-to-guide clearance with a dial indicator while rocking the stem in the direction of normal thrust (wobble method).

   - If the measurement exceeds the service limit, recheck it using a new valve.
   - If the measurement is now within the service limit, reassemble using a new valve.
   - If the measurement with a new valve still exceeds the service limit, go to step 3.

Intake Valve Stem-to-Guide Clearance
Standard (New): 0.04—0.10 mm (0.002—0.004 in.)
Service Limit: 0.16 mm (0.006 in.)

Exhaust Valve Stem-to-Guide Clearance
Standard (New): 0.10—0.16 mm (0.004—0.006 in.)
Service Limit: 0.22 mm (0.009 in.)

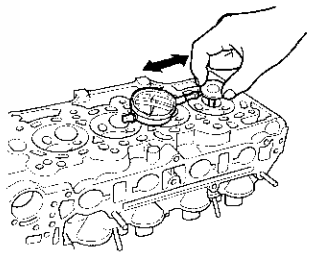

3. Subtract the O.D. of the valve stem, measured with a micrometer, from the I.D. of the valve guide, measured with an inside micrometer or a ball gauge.
   Take the measurements in three places along the valve stem and three places inside the valve guide. The difference between the largest guide measurement and the smallest stem measurement should not exceed the service limit.

Intake Valve Stem-to-Guide Clearance
Standard (New): 0.020—0.050 mm (0.0008—0.0020 in.)
Service Limit: 0.08 mm (0.003 in.)

Exhaust Valve Stem-to-Guide Clearance
Standard (New): 0.050—0.080 mm (0.0020—0.0031 in.)
Service Limit: 0.11 mm (0.004 in.)

Valve Guide Replacement

Special Tools Required
- Valve guide driver, 5.5 mm 07742-0010100
- Valve guide reamer, 5.5 mm 07HAH-PJ7A100

1. Inspect valve stem-to-guide clearance (see page 6-39).

2. As illustrated, use a commercially available air-impact valve guide driver (A) modified to fit the diameter of the valve guides. In most cases, the same procedure can be done using the valve guide driver and a conventional hammer.

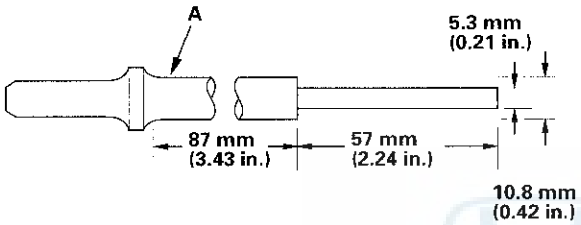

3. Select the proper replacement guides, and chill them in the freezer section of a refrigerator for at least an hour.

4. Use a hot plate or oven to evenly heat the cylinder head to 300 °F (150 °C). Monitor the temperature with a cooking thermometer. Do not get the head hotter than 300 °F (150 °C); excessive heat may loosen the valve seats.

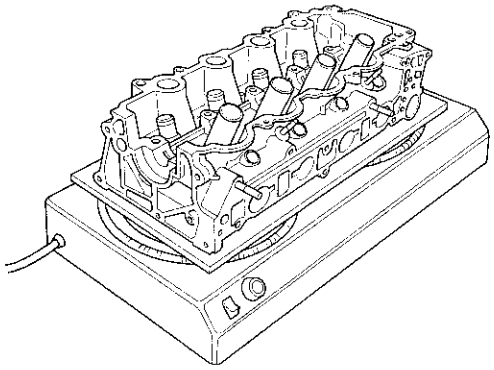

5. Working from the camshaft side, use the driver and an air hammer to drive the guide about 2 mm (0.1 in.) towards the combustion chamber. This will knock off some of the carbon and make removal easier. Hold the air hammer directly in line with the valve guide to prevent damaging the driver. Wear safety goggles or a face shield.

6. Turn the head over, and drive the guide out toward the camshaft side of the head.

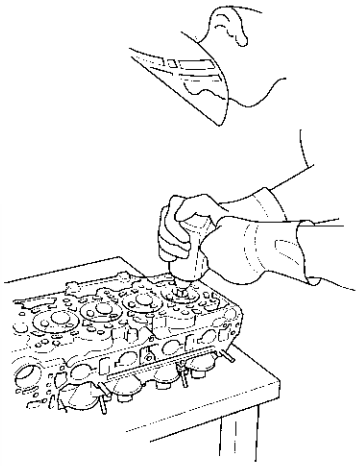

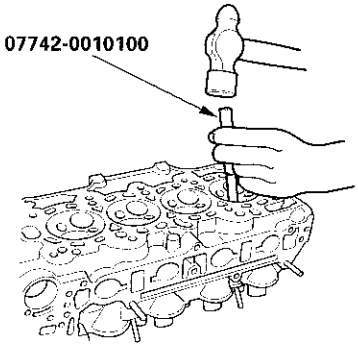

7. If a valve guide will not move, drill it out with a 8 mm (5/16 in.) bit, then try again.

   NOTE: Drill guides only in extreme cases; you could damage the cylinder head if the guide breaks.

8. Take out the new guide(s) from the freezer, one at a time, as you need them.

9. Apply a thin coat of new engine oil to the outside of the new valve guide. Install the guide from the camshaft side of the head; use the valve guide driver to drive the guide into the specified installed height (A) of the guide (B). If you have all eight guides to do, you may have to reheat the head.

Valve Guide Installed Height:
16.25—16.75 mm (0.640—0.659 in.)

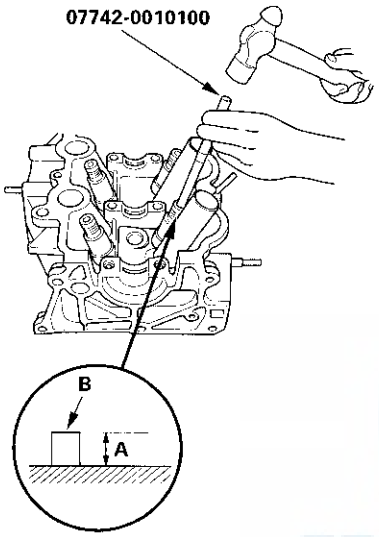

10. Coat both the reamer and the valve guide with cutting oil.

11. Rotate the reamer clockwise the full length of the valve guide bore.

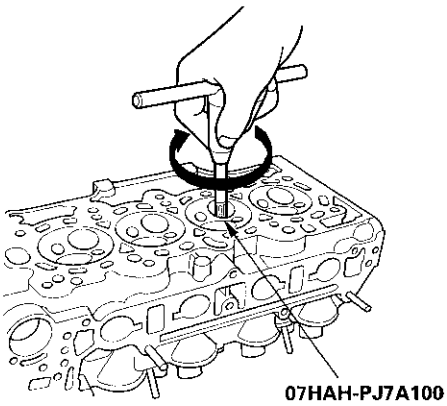

12. Continue to rotate the reamer clockwise while drawing it from the bore.

13. Thoroughly wash the guide in detergent and water to remove any cutting residue.

14. Check the clearances with a valve (see page 6-39). Verify that a valve slides in the intake and exhaust valve guides without sticking.

15. Inspect the valve seating, if necessary renew the valve seat using a valve seat cutter (see page 6-42).

Valve Seat Reconditioning

1. Inspect valve stem-to-guide clearance (see page 6-39). If the valve guides are worn, replace them (see page 6-40) before cutting the valve seats.

2. Renew the valve seats in the cylinder head using a valve seat cutter.

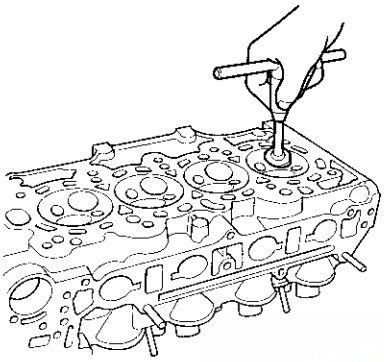

3. Carefully cut a 45 ° seat, removing only enough material to ensure a smooth and concentric seat.

4. Bevel the upper edge of the seat with the 30 ° cutter and the lower edge of the seat with the 60 ° cutter. Check the width of the seat and adjust accordingly.

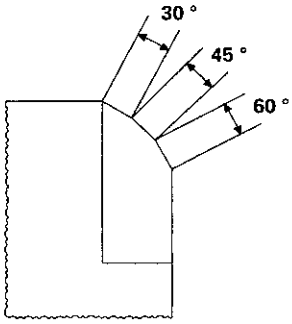

5. Make one more very light pass with the 45 ° cutter to remove any possible burrs caused by the other cutters.

Valve Seat Width
Intake:
Standard (New): 0.850—1.150 mm (0.0335—0.0453 in.)
Service Limit: 1.60 mm (0.063 in.)
Exhaust:
Standard (New): 1.250—1.550 mm (0.0492—0.0610 in.)
Service Limit: 2.00 mm (0.079 in.)

6. After resurfacing the seat, inspect for even valve seating: Apply Prussian Blue compound (A) to the valve face. Insert the valve in its original location in the head, then lift it and snap it closed against the seat several times.

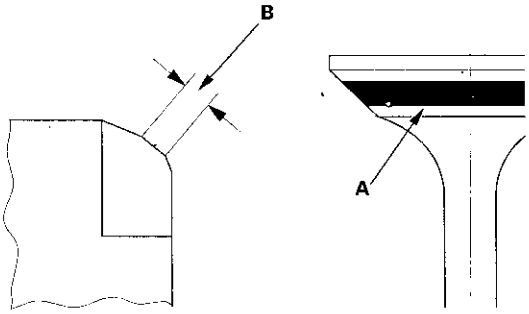

7. The actual valve seating surface (B), as shown by the blue compound, should be centered on the seat.

   - If it is too high (closer to the valve stem), you must make a second cut with the 60 ° cutter to move it down, then one more cut with the 45 ° cutter to restore seat width.
   - If it is too low (close to the valve edge), you must make a second cut with the 30 ° cutter to move it up, then make one more cut with the 45 ° cutter to restore seat width.

   NOTE: The final cut should always be made with the 45 ° cutter.

8. Insert the intake and exhaust valves in the head, and measure the valve stem installed height (A).

   Intake Valve Stem Installed Height
   Standard (New): 47.7—48.1 mm (1.878—1.894 in.)
   Service Limit: 48.4 mm (1.906 in.)

   Exhaust Valve Stem Installed Height
   Standard (New): 47.6—48.0 mm (1.874—1.890 in.)
   Service Limit: 48.3 mm (1.902 in.)

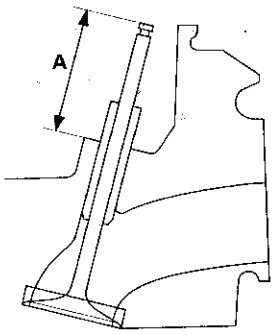

9. If the valve stem installed height is over the service limit, replace the valve and recheck. If it is still over the service limit, replace the cylinder head; the valve seat in the head is too deep.

Valve, Spring, and Valve Seal Installation

Special Tools Required
- Stem seal driver 07PAD-0010000
- Valve spring compressor attachment 07757-PJ1010A

1. Coat the valve stems with new engine oil. Install the valves in the valve guides.
2. Check that the valves move up and down smoothly.
3. Install the spring seats on the cylinder head.
4. Install the new valve seals (A) using the 5.5 mm side of the stem seal driver (B).

   NOTE: The exhaust valve seal (C) has a black spring (D), and the intake valve seal (E) has a white spring (F). They are not interchangeable.

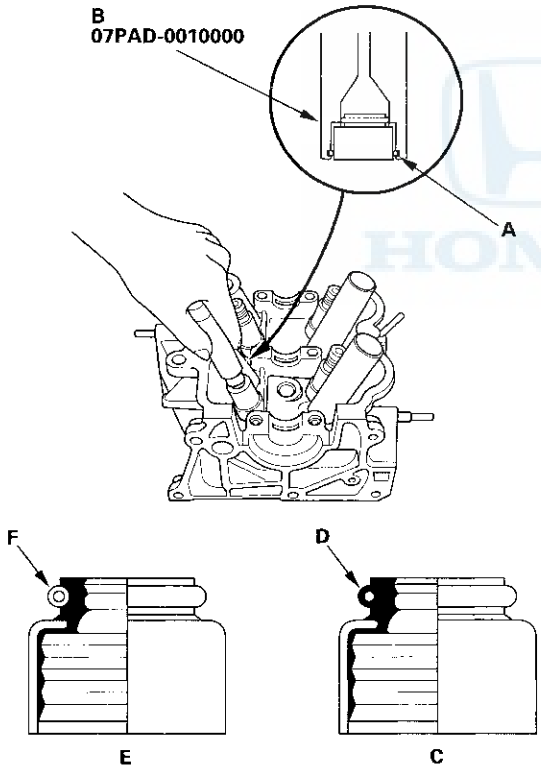

5. Install the valve spring. Place the end of the valve spring with the closely wound coils toward the cylinder head.
6. Install the spring retainer.
7. Install the valve spring compressor attachment and the valve spring compressor. Compress the spring and install the valve cotters.

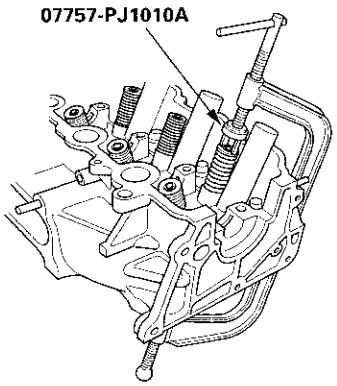

8. Remove the valve spring compressor and the valve spring compressor attachment.
9. Lightly tap the end of each valve stem two or three times with a plastic mallet (A) to ensure proper seating of the valve and the valve cotters. Tap the valve stem only along its axis so you do not bend the stem.

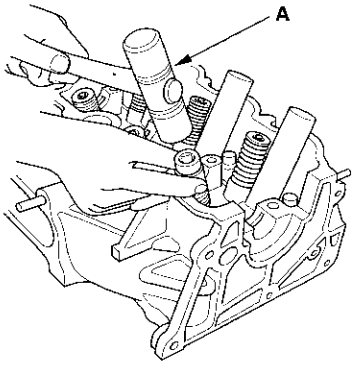

Rocker Arm Assembly and Camshaft Installation

1. Reassemble the rocker arm assembly (see page 6-33).

2. Apply new engine oil to the camshaft lobes and journals.

3. Install the camshaft (A), the rocker arm assembly (B), the lost motion assembly (C) and the lost motion holder (D).

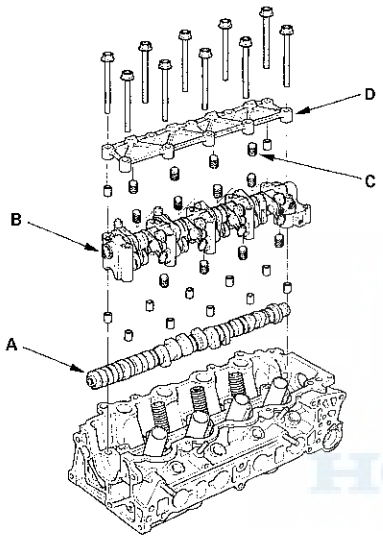

4. Apply new engine oil to the bolt threads and flange. Tighten each bolt two turns at a time in sequence.

   Specified Torque
   8 mm Bolts: 22 N·m (2.2 kgf·m, 16 lbf·ft)
   8 mm Bolt: ⑪ ⑬ 20 N·m (2.0 kgf·m, 14 lbf·ft)
   6 mm Bolt: ⑫ 12 N·m (1.2 kgf·m, 8.7 lbf·ft)

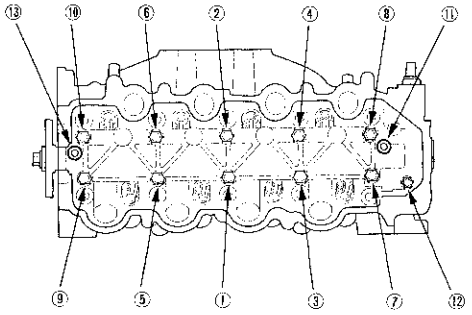

5. Install the camshaft sprocket (see page 6-28).

6. Adjust the valve clearance (see page 6-10).

Cylinder Head Installation

NOTE: Keep the cam chain away from magnetic fields.

1. Clean the cylinder head and the engine block surface.

2. Install the new cylinder head gasket (A) and the dowel pins (B) on the engine block. Always use a new cylinder head gasket.

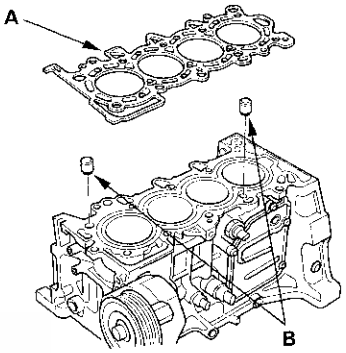

3. Set the crankshaft to top dead center (TDC). Align the TDC mark on the crankshaft sprocket with the pointer on the oil pump (see step 1 on page 6-16).

4. Set the No. 1 piston at TDC. The "UP" mark on the camshaft sprocket should be at the top, and the TDC grooves on the camshaft sprocket should line up with the top edge of the cylinder head (see step 2 on page 6-16).

5. Install the cylinder head on the engine block.

6. Measure the diameter of each cylinder head bolt at point A and point B.

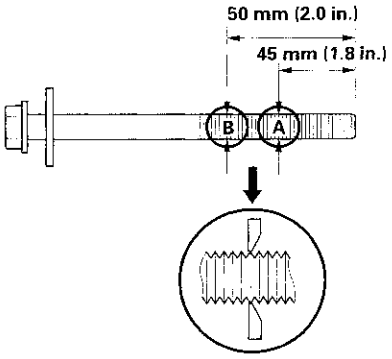

7. If either diameter is less than 10.6 mm (0.42 in.), replace the cylinder head bolt.

(cont'd)

Cylinder Head Installation (cont'd)

8. Apply new engine oil to the threads and flange of all cylinder head bolts. Be sure to install the 165 mm long head bolt (A) in the location shown.

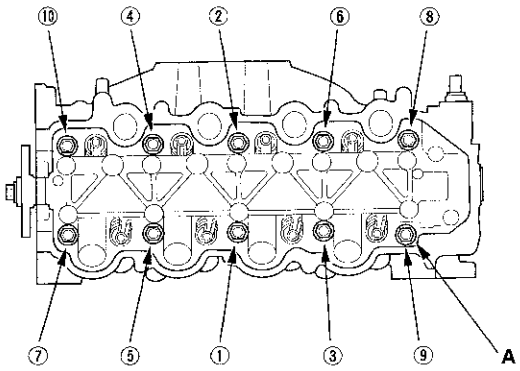

9. Tighten the cylinder head bolts in sequence to 29 N·m (3.0 kgf·m, 22 lbf·ft), use a beam-type torque wrench. When using a preset-click-type torque wrench, be sure to tighten slowly and do not overtighten. If a bolt makes any noise while you are torquing it, loosen the bolt and retighten it from the first step.

10. Tighten all cylinder head bolts an additional 130 °.

    NOTE: Remove the cylinder head bolt if you tightened it beyond the specified angle, and go back to step 6 of the procedure.

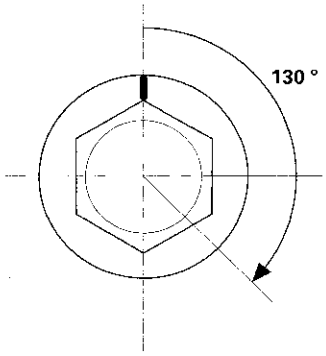

11. Install the cam chain guide mounting top bolt.

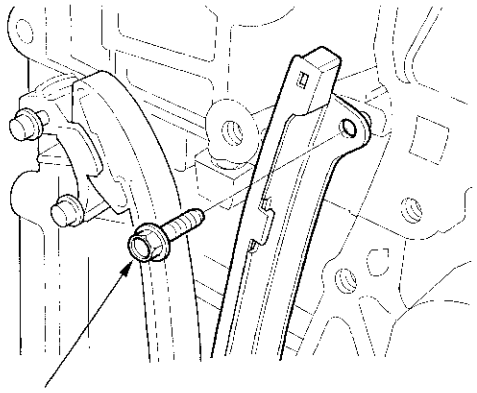

6 x 1.0 mm
12 N·m (1.2 kgf·m, 8.7 lbf·ft)

12. Install the cam chain around the camshaft sprocket aligned with the reference mark (A), then install the camshaft sprocket on the camshaft.

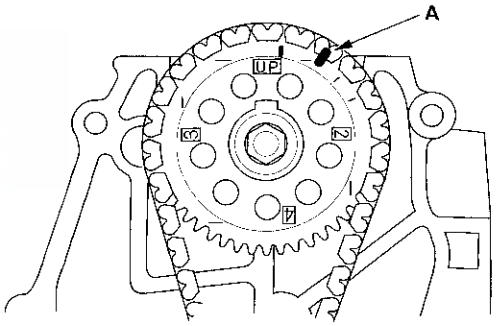

13. Apply new engine oil to the bolt threads and flange. Hold the camshaft with a 27 mm open-end wrench, then tighten the bolt.

Specified Torque: 56 N·m (5.7 kgf·m, 41 lbf·ft)

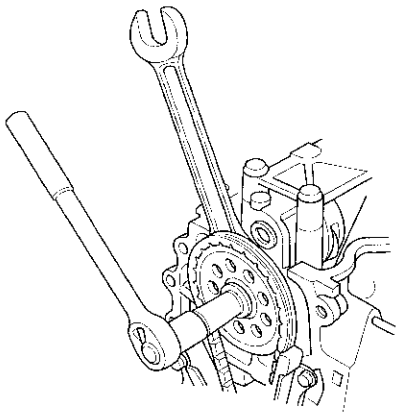

14. Loosely install the crankshaft pulley.

15. Apply new engine oil to the sliding surface of the cam chain tensioner through the oil return hole in the cylinder head.

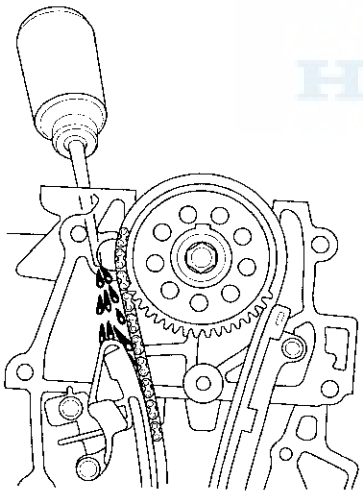

16. Hold the crankshaft pulley and set the socket wrench (A) on the camshaft sprocket bolt.

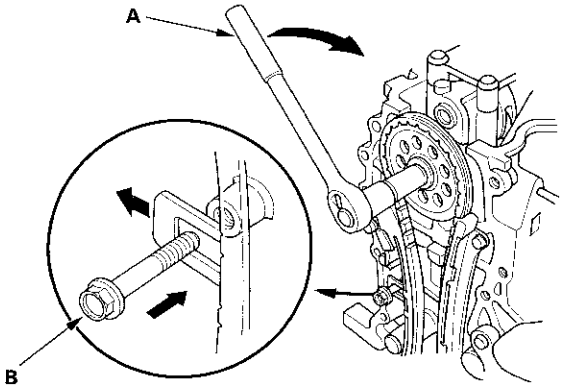

17. Turn the camshaft clockwise to compress the cam chain tensioner, then remove the 6 x 1.0 mm bolt (B).

NOTE:
- Turning torque should not exceed 44 N·m (4.5 kgf·m, 33 lbf·ft), when turning the camshaft.
- Do not turn the camshaft counterclockwise.

18. Check the chain case oil seal for damage. If the oil seal is damaged, replace the chain case oil seal (see page 6-20).

19. Remove all of the old liquid gasket from the chain case mating surfaces, the bolts, and the bolt holes.

20. Clean and dry the chain case mating surfaces.

(cont'd)

Cylinder Head Installation (cont'd)

21. Apply liquid gasket, P/N 08717-0004, 08718-0001, 08718-0003, or 08718-0009, evenly to the cylinder head and engine block mating surface of the chain case. Install the component within 5 minutes of applying the liquid gasket (see step 13 on page 6-18).

    NOTE:
    - Apply a 1.5 mm wide bead of liquid gasket along the broken lines.
    - Apply a 3.0 mm wide bead of liquid gasket to the engine block upper surface contact areas on the chain case.
    - If you apply liquid gasket P/N 08718-0012, the component must be installed within 4 minutes.
    - If too much time has passed after applying the liquid gasket, remove the old liquid gasket and residue, then reapply new liquid gasket.

22. Apply liquid gasket, P/N 08718-0001, or 08718-0009 evenly to the oil pan mating surface of the chain case. Install the component within 5 minutes of applying the liquid gasket.

    NOTE:
    - Apply a 1.5 mm wide bead of liquid gasket along the broken lines (A).
    - Apply a 5.0 mm wide bead of liquid gasket to the shaded area (B).
    - If you apply liquid gasket P/N 08718-0012, the component must be installed within 4 minutes.
    - If too much time has passed after applying the liquid gasket, remove the old liquid gasket and residue, then reapply new liquid gasket.

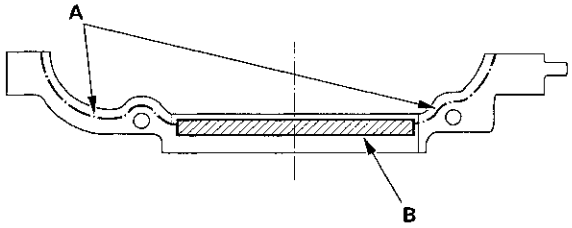

23. Set the edge of the chain case (A) to the edge of the oil pan (B), then install the chain case on the engine block (C). Wipe off the excess liquid gasket on the oil pan and chain case mating area.

    NOTE: When installing the chain case, do not slide the bottom surface on the oil pan mounting surface.

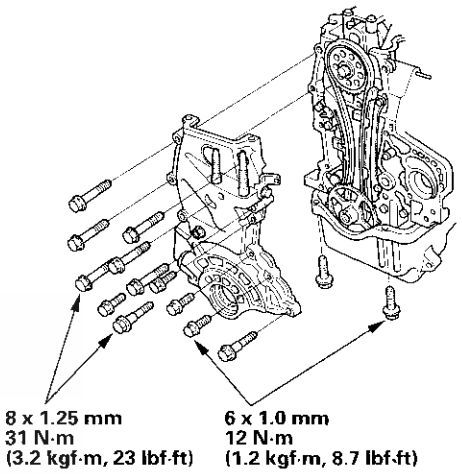

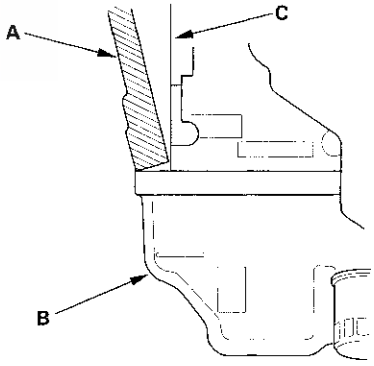

24. Install the dipstick tube (A) with a new O-ring (B). Connect the crankshaft position (CKP) sensor connector (C) and the harness clamps (D).

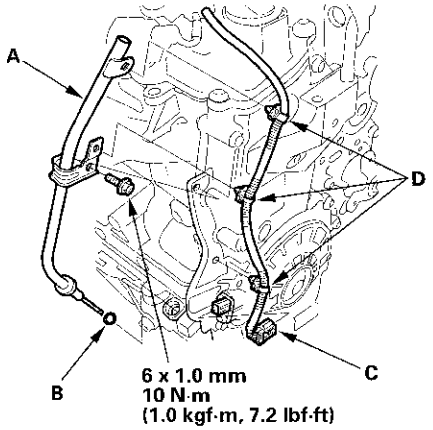

25. Install the side engine mount bracket, then tighten the mounting bolts and nut in the numbered sequence shown (see step 16 on page 6-19).

26. Install the ground cable (see step 17 on page 6-19).

27. Install the crankshaft pulley (see page 6-12).

28. Install the warm-up three way catalytic converter (WU-TWC) (see page 11-377).

29. Install the cylinder head cover (see page 6-22).

30. Install the water pump (see page 10-5).

31. Install the drive belt (see page 10-10).

32. Connect the upper radiator hose (A), the lower radiator hose (B), the water bypass hose (C), and the heater hoses (D).

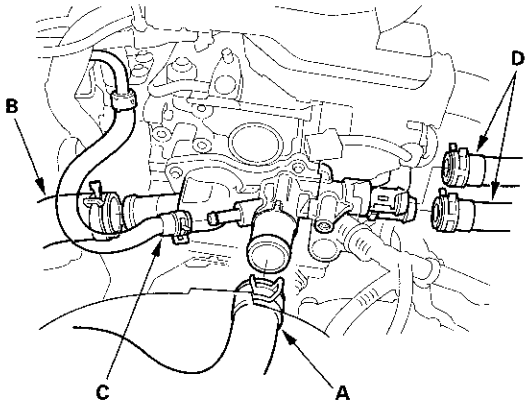

33. Install the evaporative emission (EVAP) canister purge valve bracket bolts and the fuel pipe nut, then connect the purge joint to the bracket (see step 43 on page 5-19).

34. Install the harness clamp, then connect the EVAP canister purge valve connector (see step 44 on page 5-19).

(cont'd)

Cylinder Head Installation (cont'd)

35. Install the harness clamp (A), then connect the camshaft position (CMP) sensor (B) and the engine coolant temperature (ECT) sensor 1 connector (C).

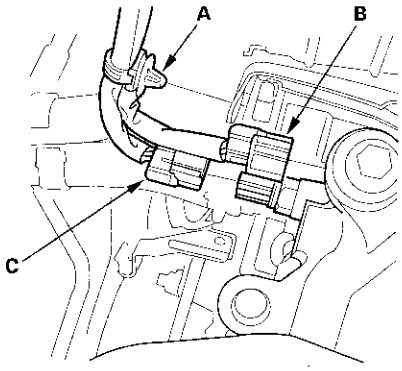

36. Install the connecting pipe (A) with a new O-ring (B). Install the harness clamp (C), then connect the knock sensor connector (D).

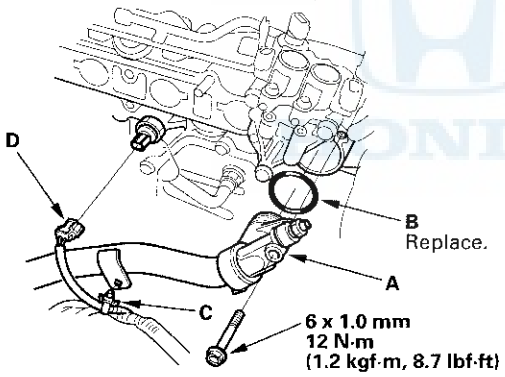

37. Install the intake manifold (see page 9-5).

38. Install the air cleaner assembly (see page 11-370).

39. Install the engine cover (see step 53 on page 5-21).

40. After installation, check that all tubes, hoses, and connectors are installed correctly.

41. Inspect for fuel leaks. Turn the ignition switch to ON (II) (do not operate the starter) so the fuel pump runs for about 2 seconds and pressurizes the fuel line. Repeat this operation three times, then check for fuel leakage at any point in the fuel line.

42. Refill the radiator with engine coolant, and bleed the air from the cooling system with the heater valve open (see step 9 on page 10-7).

43. Do the CKP pattern clear/CKP pattern learn procedure (see page 11-4).

44. Inspect the idle speed (see page 11-332).

45. Inspect the ignition timing (see page 4-19).

Engine Mechanical

Engine Block

Special Tools 7-2
Component Location Index 7-3
Connecting Rod and Crankshaft End Play Inspection 7-5
Crankshaft Main Bearing Replacement 7-6
Connecting Rod Bearing Replacement 7-8
Oil Pan Removal 7-11
Crankshaft and Piston Removal 7-12
Crankshaft Inspection 7-14
Block and Piston Inspection 7-15
Cylinder Bore Honing 7-17
Piston, Pin, and Connecting Rod Replacement 7-18
Piston Ring Replacement 7-21
Piston Installation 7-23
Connecting Rod Bolt Inspection 7-24
Crankshaft Installation 7-25
Oil Pan Installation 7-27
Transmission End Crankshaft Oil Seal Installation - In Car 7-29
Sealing Bolt Installation 7-30

Engine Block

Special Tools

Ref. No.	Tool Number	Description	Qty
①	07PAF-0010400	Piston Base Head	1
②	07PAF-0010500	Piston Base Head Insert	1
③	07ZAD-PNA0100	Oil Seal Driver Attachment	1
④	07749-0010000	Driver	1
⑤	07973-6570201	Adjustable Piston Pin Driver Head	1
⑥	07973-6570500	Piston Base	1
⑦	07973-6570600	Piston Base Spring	1
⑧	07973-6890200	Adjustable Piston Pin Driver Shaft	1
⑨	07973-6890300	Pilot Collar	1
⑩	07973-6890400	Piston Pin Base Insert	1

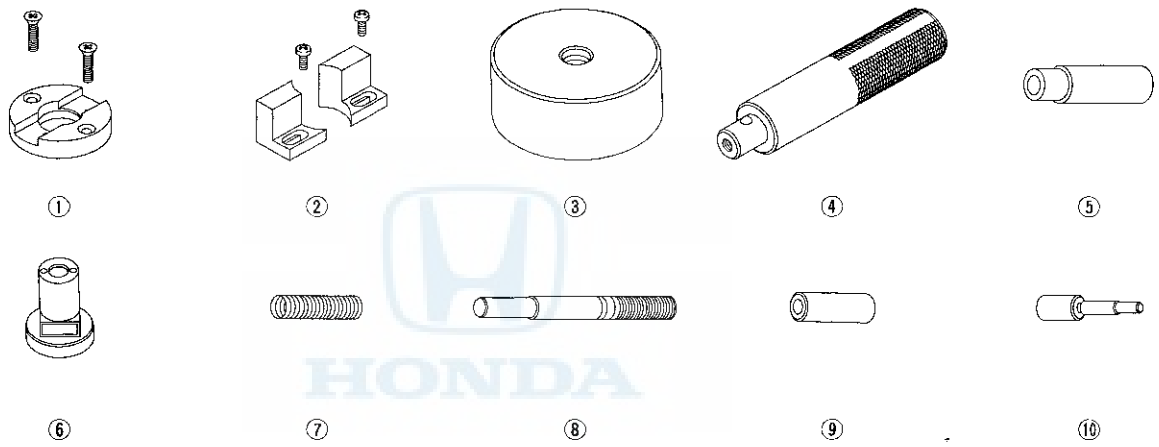

Component Location Index

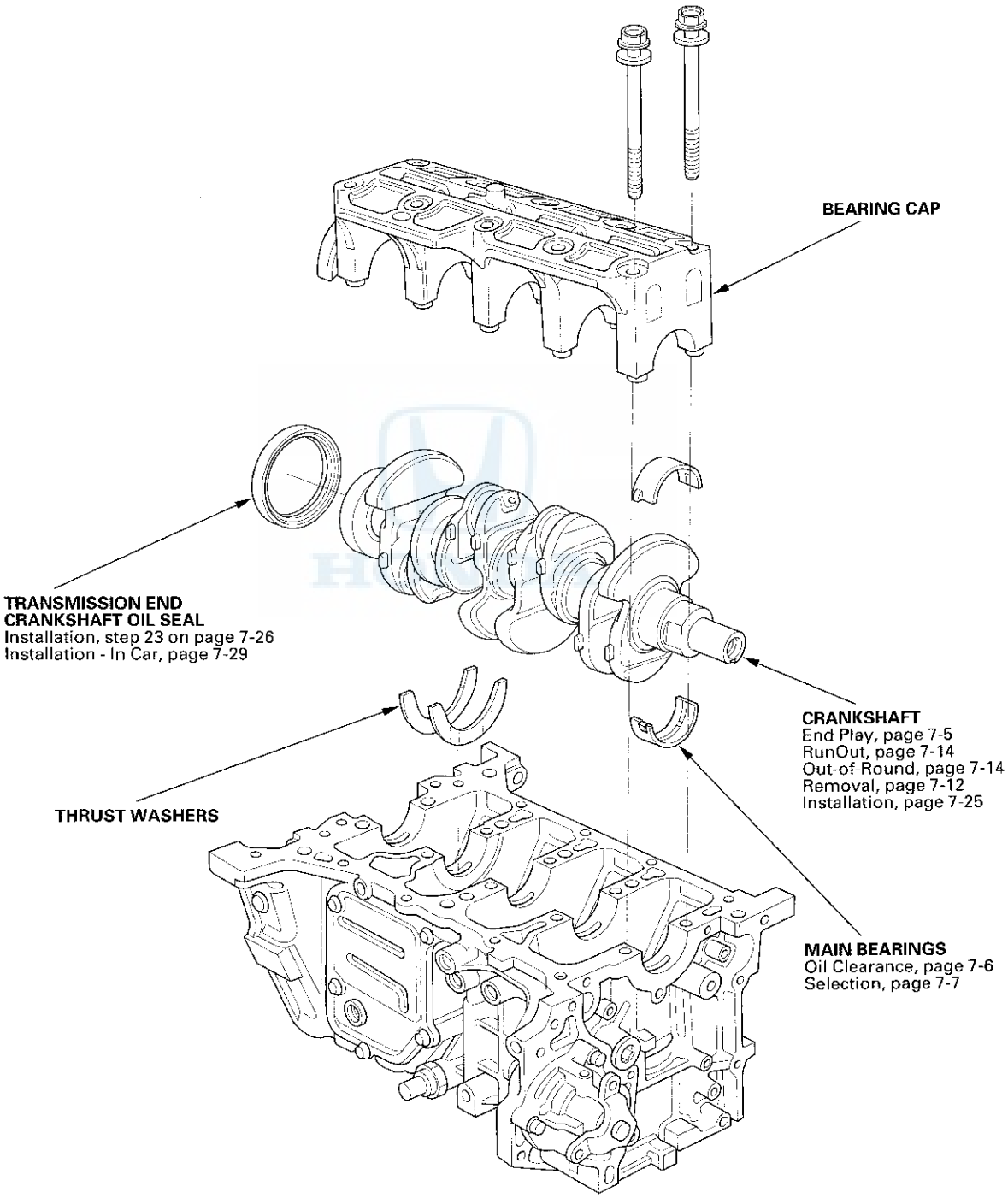

(cont'd)

Component Location Index (cont'd)

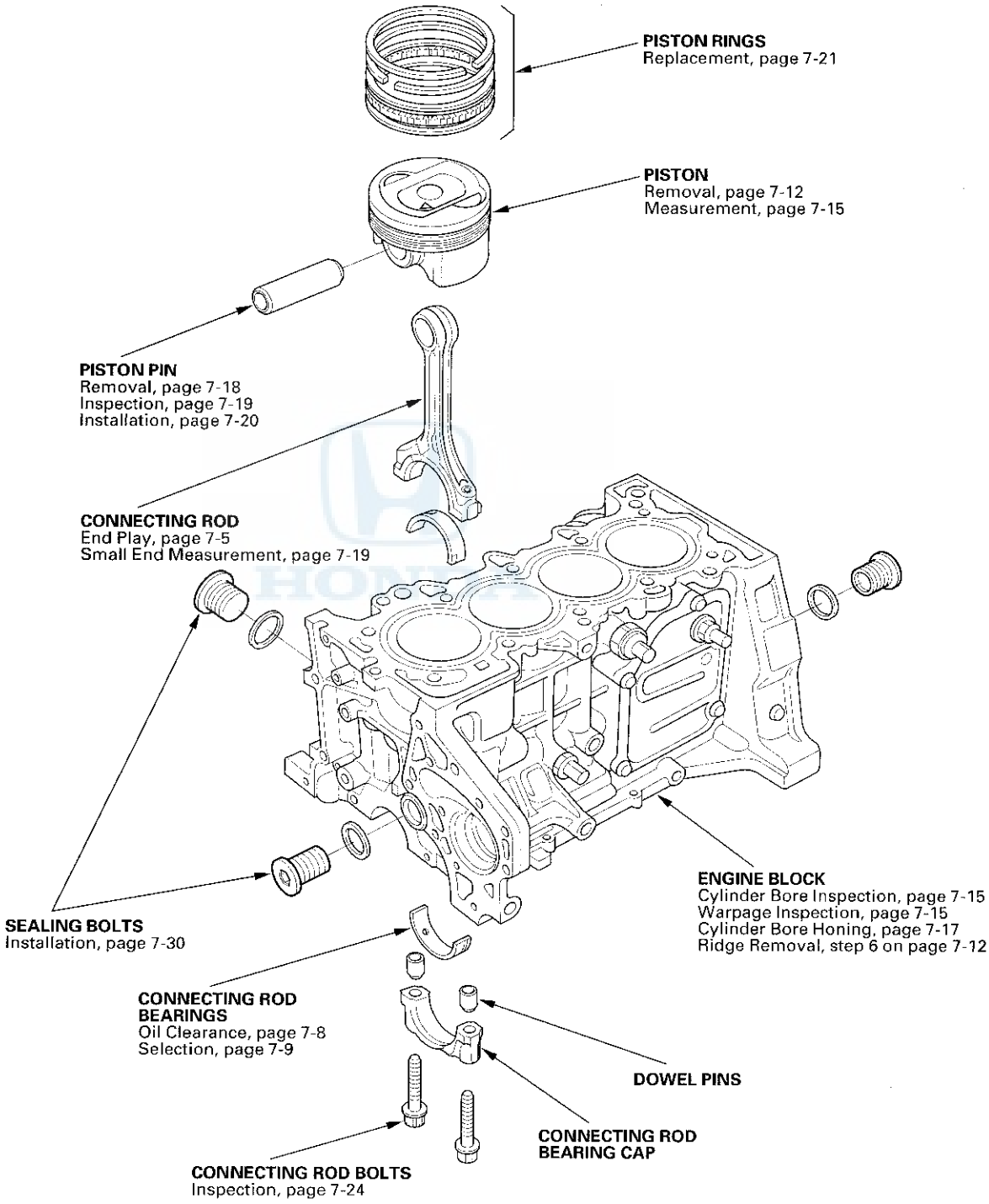

Connecting Rod and Crankshaft End Play Inspection

1. Remove the oil pump (see page 8-14).

2. Measure the connecting rod end play with a feeler gauge (A) between the connecting rod (B) and the crankshaft (C).

   Connecting Rod End Play
   Standard (New): 0.15—0.30 mm (0.006—0.012 in.)
   Service Limit: 0.40 mm (0.016 in.)

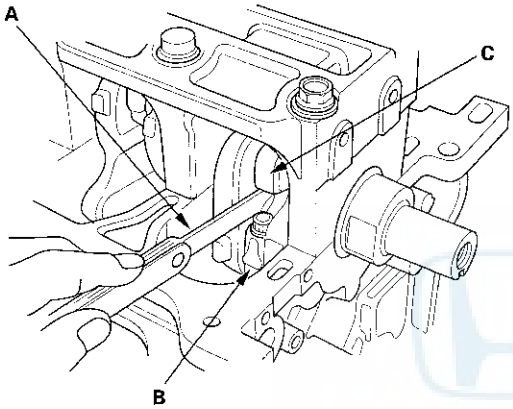

3. If the connecting rod end play is beyond the service limit, install a new connecting rod, and recheck. If it is still beyond the service limit, replace the crankshaft (see page 7-12).

4. Push the crankshaft firmly away from the dial indicator, and zero the dial against the end of the crankshaft. Then pull the crankshaft firmly back toward the indicator; the dial reading should not exceed the service limit.

   Crankshaft End Play
   Standard (New): 0.10—0.35 mm (0.004—0.014 in.)
   Service Limit: 0.45 mm (0.018 in.)

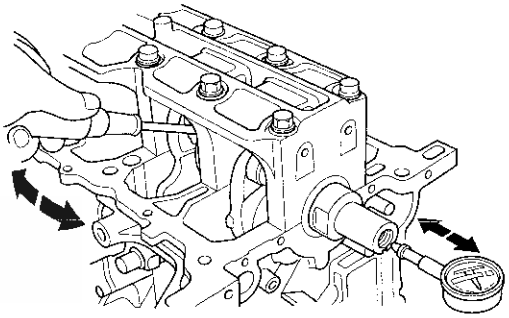

5. If the end play is beyond the service limit, replace the thrust washers and recheck, if it is still beyond the service limit, replace the crankshaft (see page 7-12).

Crankshaft Main Bearing Replacement

Main Bearing Clearance Inspection

1. Remove the bearing cap and the bearing halves (see page 7-12).

2. Clean each main journal and bearing half with a clean shop towel.

3. Place one strip of plastigage across each main journal.

4. Reinstall the bearing half and the bearing cap, then tighten the bolts to 25 N·m (2.5 kgf·m, 18 lbf·ft) + 40 ° (see step 18 on page 7-26).

   NOTE:
   - Apply new engine oil to the bolt threads and flanges.
   - Do not rotate the crankshaft during inspection.

5. Remove the bearing cap and the bearing half again, and measure the widest part of the plastigage.

   Main Bearing-to-Journal Oil Clearance
   Standard (New): 0.018 — 0.036 mm (0.0007 — 0.0014 in.)
   Service Limit: 0.050 mm (0.0020 in.)

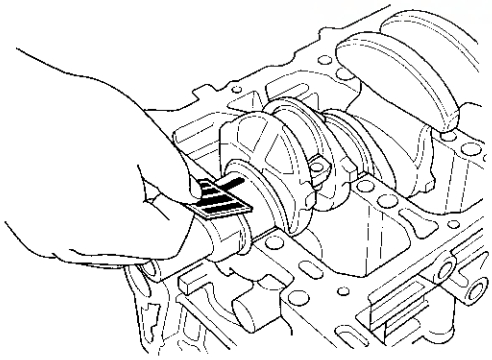

6. If the plastigage measures too wide or too narrow, remove the crankshaft, and remove the upper half of the bearing. Install a new, complete bearing with the same color code, and recheck the clearance. Do not file, shim, or scrape the bearings or the caps to adjust clearance.

7. If the plastigage shows the clearance is still incorrect, try the next larger or smaller bearing (the color listed above or below that one), and check again. If the proper clearance cannot be obtained by using the appropriate larger or smaller bearings, replace the crankshaft (see page 7-12) and start over.

Main Bearing Selection

Crankshaft Bore Code Location

1. Letters have been stamped on the end of the engine block as a code for the size of each of the five main journal bores. Write down the crank bore codes.
   If you can't read the codes because of accumulated dirt and dust, do not scrub them with a wire brush or scraper. Clean them only with solvent or detergent.

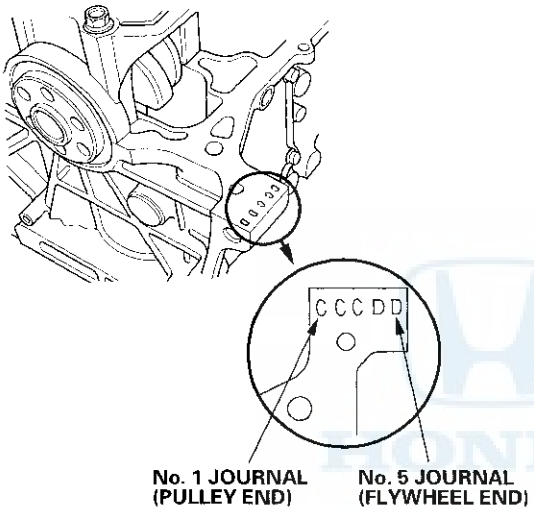

Main Journal Code Location

2. The main journal codes are stamped on the crankshaft in either location.

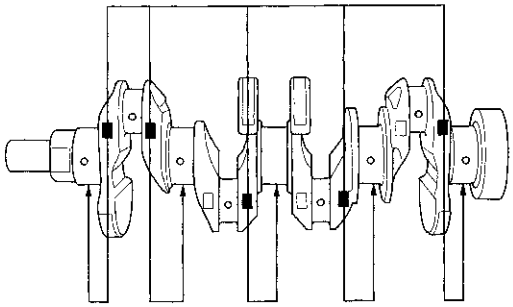

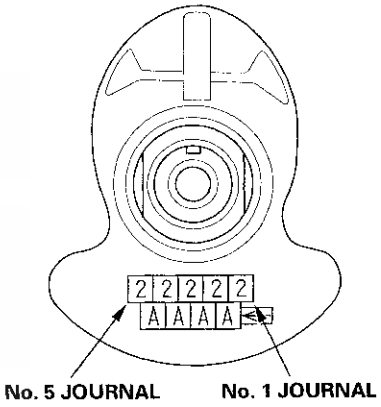

(cont'd)

Crankshaft Main Bearing Replacement (cont'd)

3. Use the crank bore codes and the crank journal codes to select the appropriate replacement bearings from the following table.

   NOTE: Color code is on the edge of the bearing.

Main journal code (Smaller main journal)	Crank bore code → Larger crank bore: A	B	C	D
	Smaller bearing (Thicker)			
1	Red	Pink	Yellow	Green
2	Pink	Yellow	Green	Brown
3	Yellow	Green	Brown	Black
4	Green	Brown	Black	Blue

Connecting Rod Bearing Replacement

Connecting Rod Bearing Clearance Inspection

1. To check rod bearing-to-journal oil clearance, remove the bearing cap (see page 7-12).

2. Remove the connecting rod cap and the bearing half.

3. Clean the crankshaft rod journal and the bearing half with a clean shop towel.

4. Place plastigage across the rod journal.

5. Reinstall the bearing half and connecting rod cap, and tighten the bolts.

   NOTE:
   - Apply new engine oil to the bolt threads and flanges.
   - Do not rotate the crankshaft during inspection.

   Tightening Torque:
   10 N·m (1.0 kgf·m, 7.2 lbf·ft) +90 °

6. Remove the connecting rod cap and the bearing half and measure the widest part of the plastigage.

   Connecting Rod Bearing-to-Journal Oil Clearance
   Standard (New): 0.020—0.038 mm (0.0008—0.0015 in.)
   Service Limit: 0.050 mm (0.0020 in.)

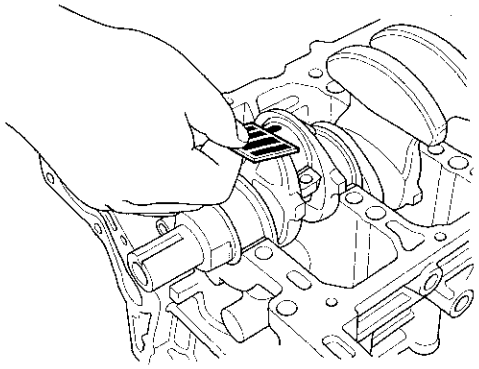

7. If the plastigage measures too wide or too narrow, remove the upper half of the bearing, install a new, complete bearing with the same color code, and recheck the clearance. Do not file, shim, or scrape the bearings or the caps to adjust clearance.

8. If the plastigage shows the clearance is still incorrect, try the next larger or smaller bearing (the color listed above or below that one), and check clearance again. If the proper clearance cannot be obtained by using the appropriate larger or smaller bearings, replace the crankshaft (see page 7-12) and start over.

Connecting Rod Bearing Selection

1. Inspect the connecting rod for cracks and heat damage.

Connecting Rod Big End Bore Code Locations

2. Each connecting rod falls into one of four tolerance ranges (from 0 to 0.024 mm (0.0009 in.), in 0.006 mm (0.0002 in.) increments) depending on the size of its big end bore.
   It's then stamped with a number or bar (1, 2, 3, or 4) indicating the range. You may find any combination of 1, 2, 3, or 4 in any engine.
   If the codes are indecipherable because of an accumulation of dirt and dust, do not scrub them with a wire brush or scraper. Clean them only with solvent or detergent.

   Normal Bore Size: 43.0 mm (1.69 in.)

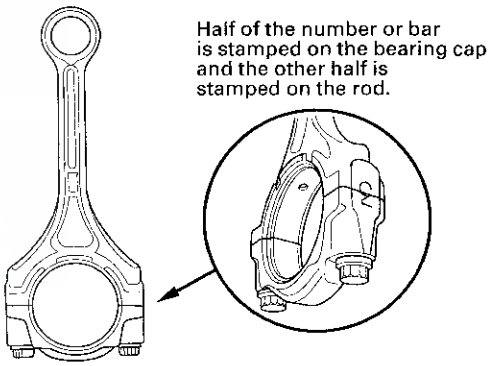

(cont'd)

Connecting Rod Bearing Replacement (cont'd)

Connecting Rod Journal Code Location

3. The connecting rod journal codes are stamped on the crankshaft in either locations.

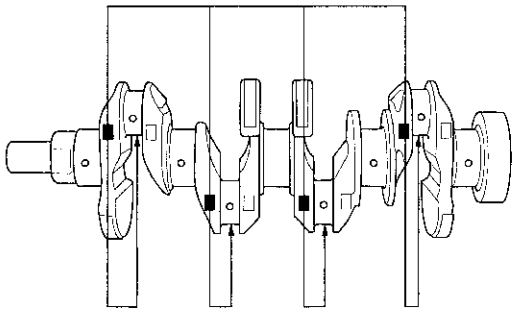

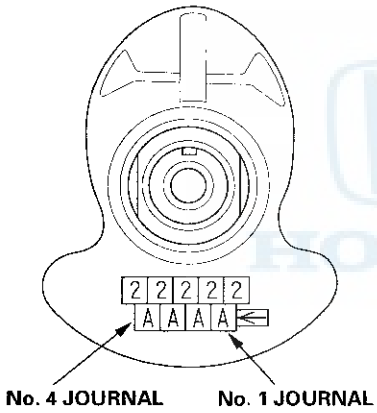

4. Use the big end bore codes and the rod journal codes to select appropriate replacement bearings from the following table.

NOTE: Color code is on the edge of the bearing.

Big end bore code → Larger big end bore

Rod journal code → Smaller bearing (Thicker)

Rod journal code	A	B	C	D
1	Red	Pink	Yellow	Green
2	Pink	Yellow	Green	Brown
3	Yellow	Green	Brown	Black
4	Green	Brown	Black	Blue

Smaller rod journal ↓ Smaller bearing (Thicker) ↓

Oil Pan Removal

1. Drain the engine oil (see page 8-10).
2. If the engine is already out of the vehicle, go to step 18.
3. Remove the steering wheel (see page 17-6), then remove the steering joint bolt (see step 30 on page 5-6).
4. Remove the front wheels.
5. Remove the front undercover and the splash shield (see step 21 on page 5-5).
6. Remove the A/C condenser fan shroud assembly (see page 10-12).
7. Disconnect the A/C compressor clutch connector, then remove the A/C compressor (see step 27 on page 5-6).
8. Remove the intake manifold bracket and the harness clamp (see step 10 on page 9-3).
9. Remove the under-floor three way catalytic converter (TWC) (see step 39 on page 5-8).
10. Disconnect the front stabilizer links (see page 18-25).
11. Disconnect the suspension lower arm ball joints (see page 18-20).
12. Disconnect the steering gearbox harness connectors (see step 43 on page 5-8).
13. Attach the universal lifting eyelet (see step 45 on page 5-8), and the engine support hanger (see step 46 on page 5-8).
14. Remove the lower torque rod mounting bolts (see step 48 on page 5-9).
15. Make the appropriate reference line at the both side front subframe that line up with the edge on the body (see step 49 on page 5-9).
16. Loosen the mid stiffener mounting bolts (see step 50 on page 5-9).
17. Using the front subframe adapter (see step 51 on page 5-9), then remove the front subframe (see step 53 on page 5-10).
18. Remove the harness clamps (A) and the mounting bolt (B), then remove the dipstick tube (C).

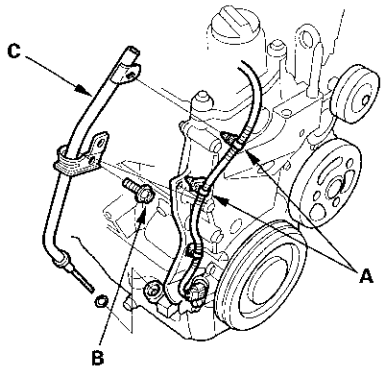

19. Remove the lower torque rod bracket mounting bolts.

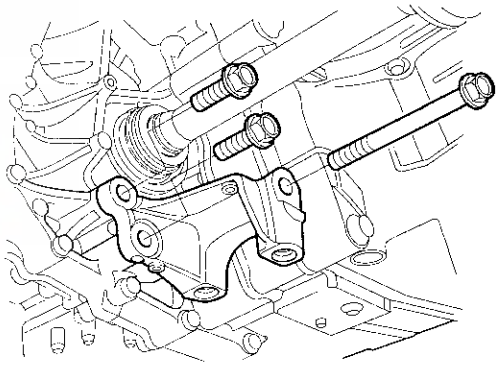

(cont'd)

Oil Pan Removal (cont'd)

20. Remove the two bolts securing the transmission.

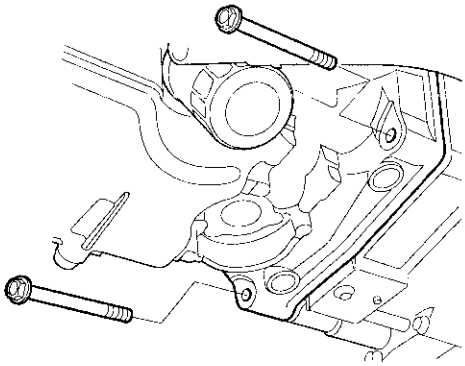

21. Remove the bolts securing the oil pan.

22. Insert a flat blade screwdriver where shown, and separate the oil pan from the engine block.

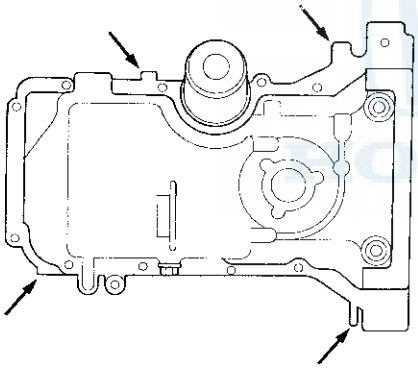

23. Remove the oil pan.

    NOTE: Lower the oil pan carefully not to damage the IMA motor (resolver stator).

Crankshaft and Piston Removal

1. Remove the engine/IMA motor/transmission assembly (see page 5-3).

2. Remove the IMA motor housing (see page 12-195).

3. Remove the cam chain (see page 6-14).

4. Remove the cylinder head (see page 6-24).

5. Remove the oil screen (A), then remove the oil pump (B).

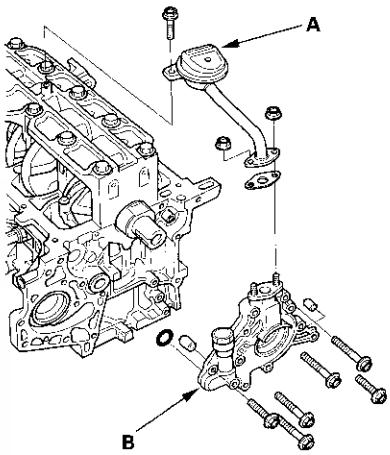

6. If you can feel a ridge of metal or hard carbon around the top of each cylinder, remove it with a ridge reamer (A). Follow the reamer manufacturer's instructions. If the ridge is not removed, it may damage the pistons as they are pushed out.

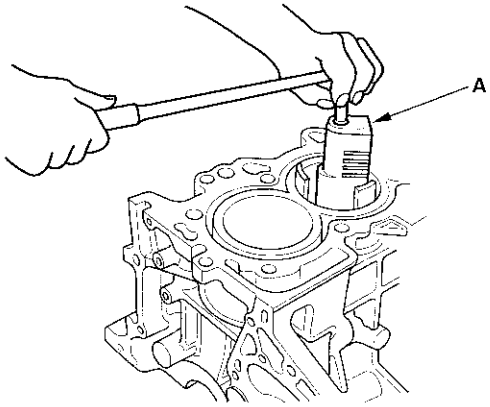

7. Remove the bearing cap bolts. To prevent warpage, loosen the bolts in sequence 1/3 turn at a time; repeat the sequence until all bolts are loosened.

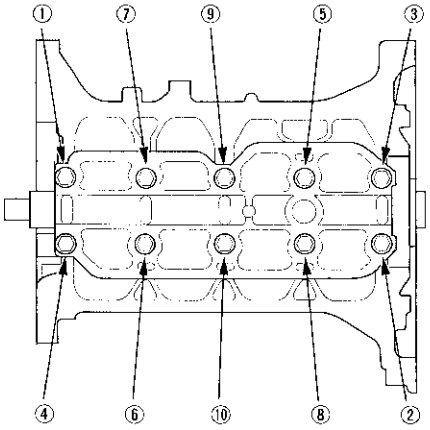

8. Remove the bearing cap.

9. Remove the connecting rod caps/bearings. Keep all caps/bearings in order.

10. Lift the crankshaft out of the engine block, being careful not to damage the journals.

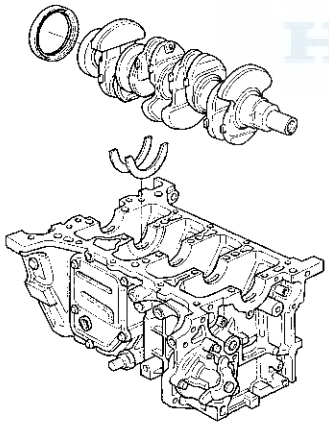

11. Remove the upper bearing halves from the connecting rods, and set them aside with their respective caps.

12. Use the wooden handle of a hammer (A) to drive out the piston/connecting rod assembly (B).

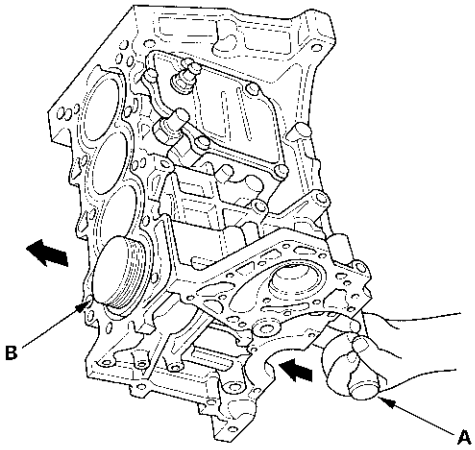

13. Reinstall the bearing cap and bearings on the engine block.

14. Reinstall the connecting rod bearings and caps after removing each piston/connecting rod assembly.

15. To avoid mix-up on reassembly, mark each piston/connecting rod assembly with its cylinder number.

NOTE: The existing number on the connecting rod does not indicate its position in the engine block, it indicates the rod bore size.

Crankshaft Inspection

Out-of-Round and Taper

1. Remove the crankshaft from the engine block (see page 7-12).

2. Clean the crankshaft oil passages with pipe cleaners or a suitable brush.

3. Clean the keyway slot and the threaded holes for damage.

4. Measure the out-of round at the middle of each rod and the main journal in two places. The difference between measurements on each journal must not be more than the service limit.

   Journal Out-of-Round
   Standard (New): 0.005 mm (0.0002 in.) max.
   Service Limit: 0.010 mm (0.0004 in.)

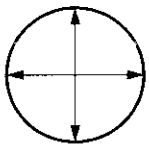

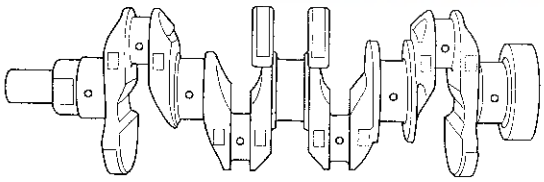

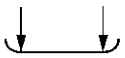

5. Measure the taper at the edges of each rod and the main journal. The difference between measurements on each journal must not be more than the service limit.

   Journal Taper
   Standard (New): 0.005 mm (0.0002 in.) max.
   Service Limit: 0.010 mm (0.0004 in.)

Straightness

6. Place the V-blocks on a surface plate.

7. Check the total runout with the crankshaft supported on V-blocks.

8. Measure the runout on all of the main journals. Rotate the crankshaft two complete revolutions. The difference between measurements on each journal must not be more than the service limit.

   Crankshaft Total Runout
   Standard (New): 0.03 mm (0.0012 in.) max.
   Service Limit: 0.04 mm (0.0016 in.)

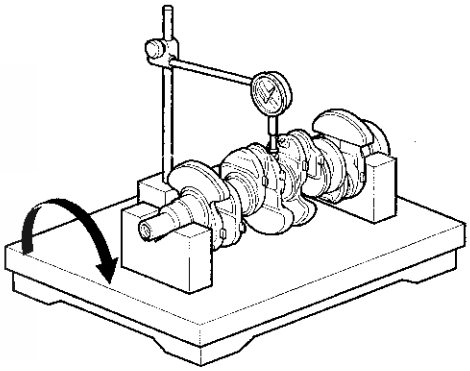

Block and Piston Inspection

1. Remove the crankshaft and the pistons (see page 7-12).

2. Check the piston for distortion or cracks.

3. Measure the piston skirt diameter (A) at a point 13 mm (0.5 in.) from the bottom of the skirt.

   Piston Skirt Diameter
   Standard (New): 72.98—72.99 mm (2.8732—2.8736 in.)
   Service Limit: 72.97 mm (2.8728 in.)

   Oversize Piston Skirt Diameter
   0.25: 73.23—73.24 mm (2.8831—2.8835 in.)

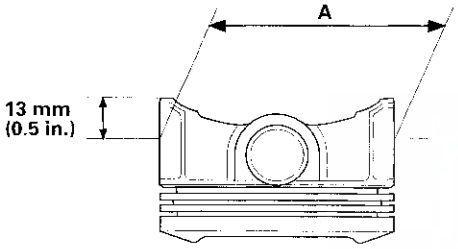

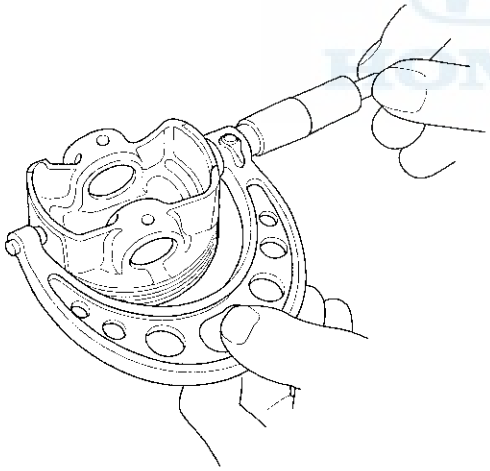

4. Measure the wear and taper in direction X and Y at three levels in each cylinder as shown. If measurements in any cylinder are beyond the oversize bore service Limit, replace the engine block. If the engine block is to be rebored, refer to step 7 after reboring.

   Cylinder Bore Size
   Standard (New): 73.00—73.02 mm (2.8740—2.8748 in.)
   Service Limit: 73.07 mm (2.8767 in.)

   Oversize
   0.25: 73.25—73.27 mm (2.8839—2.8846 in.)

   Reboring Limit: 0.25 mm (0.01 in.) max.

   Bore Taper
   Limit: (Difference between first and third measurement) 0.05 mm (0.002 in.)

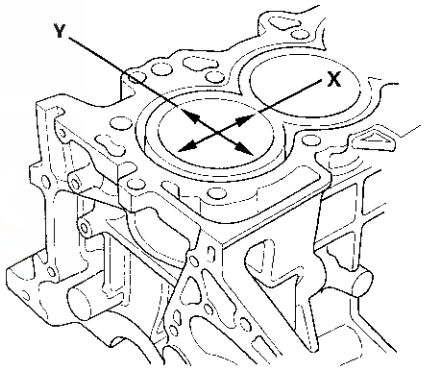

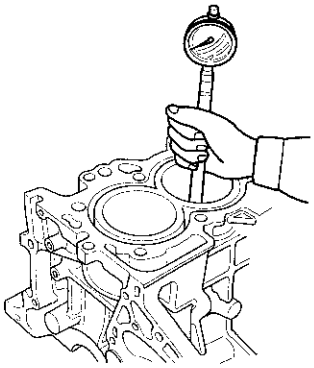

(cont'd)

Block and Piston Inspection (cont'd)

5. Hone any scored or scratched cylinder bores.

6. Check the top of the engine block for warpage. Measure the along the edges and across the center as shown.

   Engine Block Warpage
   Standard (New): 0.07 mm (0.003 in.) max.
   Service Limit: 0.10 mm (0.004 in.)

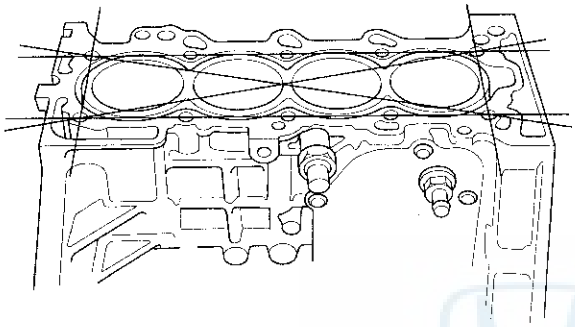

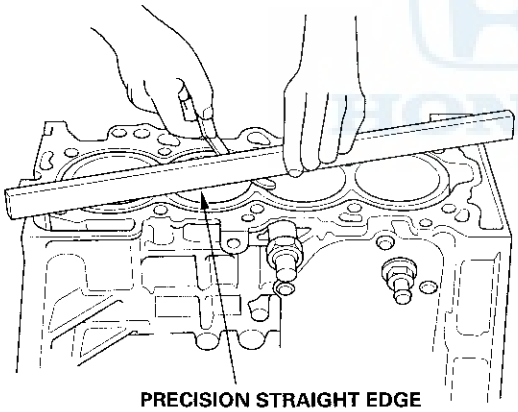

7. Calculate the difference between the cylinder bore diameter and the piston diameter. If the clearance is near or exceeds the service limit, inspect the piston and the engine block for excessive wear.

   Piston-to-Cylinder Bore Clearance
   Standard (New): 0.010—0.040 mm (0.0004—0.0016 in.)
   Service Limit: 0.05 mm (0.002 in.)

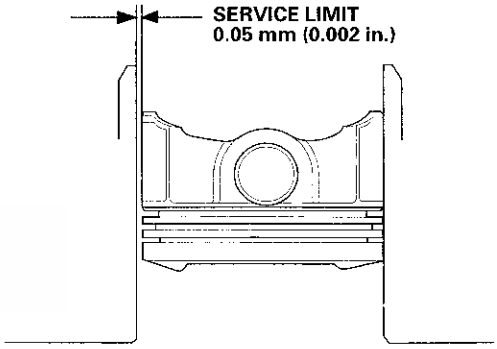

Cylinder Bore Honing

1. Measure the cylinder bores (see page 7-15). If the engine block is to be reused, hone the cylinders and remeasure the bores. Only a scored or scratched cylinder bore must be honed.

2. Hone the cylinder bores with honing oil and a fine (400 grit) stone in a 60 degree cross-hatch pattern.

   NOTE:
   - Use only a rigid hone with 400 grit or finer stone, such as Sunnen, Ammco, or equivalent.
   - Do not use stones that are worn or broken.

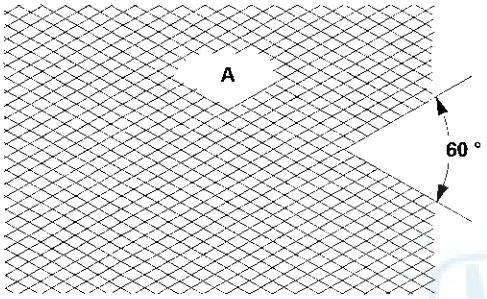

3. When honing is complete, thoroughly clean the engine block of all metal particles. Wash the cylinder bores with hot soapy water, then dry and oil them immediately to prevent rusting.

   NOTE: Never use solvent, it will only redistribute the grit on the cylinder walls.

4. If scoring or scratches are still present in the cylinder bores after honing the engine block to the service limit, rebore the engine block. Some light vertical scoring and scratching is acceptable if it is not deep enough to catch your fingernail and does not run the full length of the bore.

Piston, Pin, and Connecting Rod Replacement

Special Tools Required
- Piston base 07973-6570500
- Piston base spring 07973-6570600
- Piston pin base insert 07973-6890400
- Piston base head 07PAF-0010400
- Pilot collar 07973-6890300
- Piston base head insert 07PAF-0010500
- Adjustable piston pin driver shaft 07973-6890200
- Adjustable piston pin driver head 07973-6570201

Disassembly

1. Assemble the piston base (A), piston base spring (B), piston pin base insert (C), and piston base head (D) as shown.

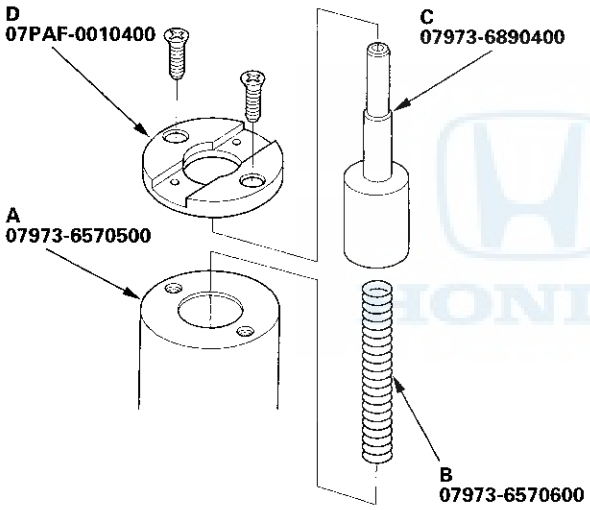

2. Temporarily install the pilot collar over the piston pin base insert (A), and adjust the piston base head inserts as shown, then tighten the screws (B). Remove the pilot collar.

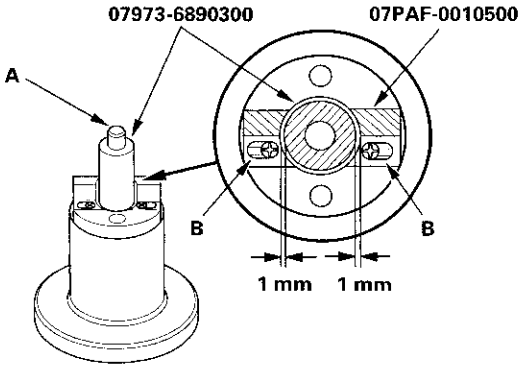

3. Assemble and adjust the length of the piston pin driver head and shaft to 57 mm (2.2 in.).

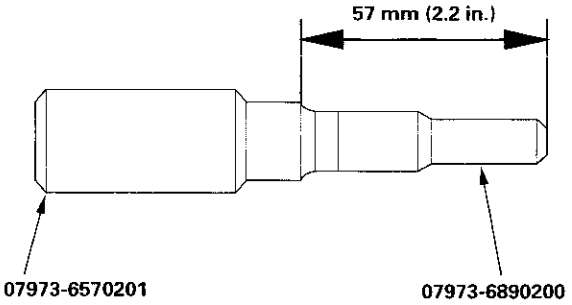

4. With the arrow on top of the piston pointing up, place the piston assembly (A) on the piston base (B). Be sure you position the recessed flat area of the piston against the piston base head inserts (C) as shown.

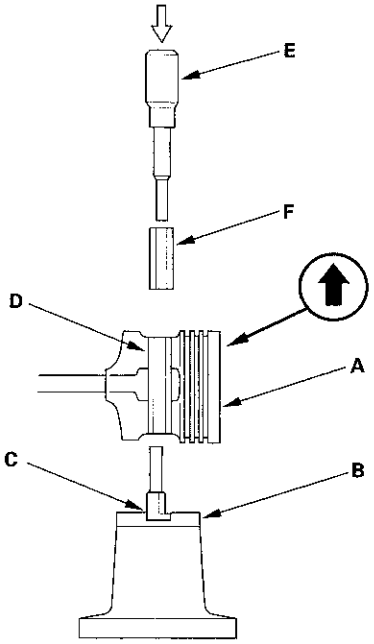

5. Press the pin (D) out with the piston pin driver (E), the pilot collar (F), and a hydraulic press.

Inspection

NOTE: Inspect the piston, the piston pin, and the connecting rod when they are at room temperature.

1. Measure the diameter of the piston pin.

   Piston Pin Diameter
   Standard (New): 17.996—18.000 mm
   (0.7085—0.7087 in.)

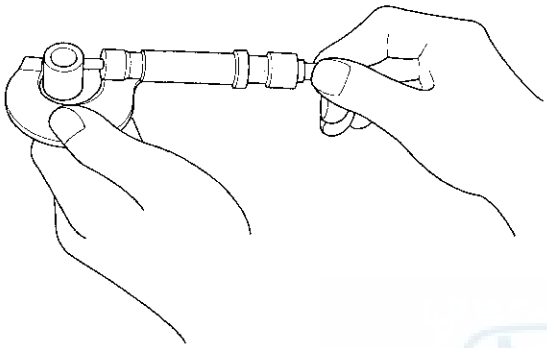

2. Zero the dial indicator to the piston pin diameter.

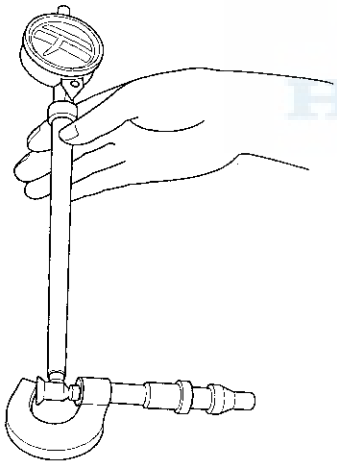

3. Check the difference between the piston pin diameter and the piston pin hole diameter in the piston.

   Piston Pin-to-Piston Clearance
   Standard (New): 0.010—0.018 mm
   (0.0004—0.0007 in.)

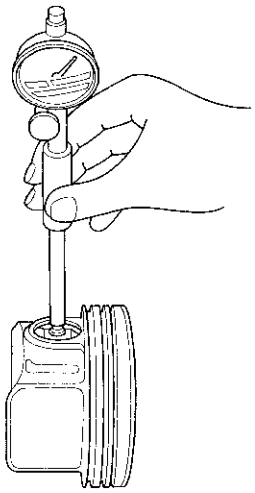

4. Check the difference between the piston pin diameter and the connecting rod small end diameter.

   Piston Pin-to-Connecting Rod Clearance
   Standard (New): 0.019—0.036 mm
   (0.0007—0.0014 in.)

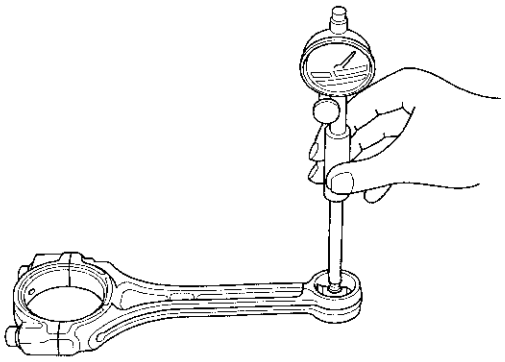

(cont'd)

Piston, Pin, and Connecting Rod Replacement (cont'd)

Reassembly

1. Assemble the piston with the arrow (A) pointing up and the connecting rod with the embossed marks (B) on the same side.

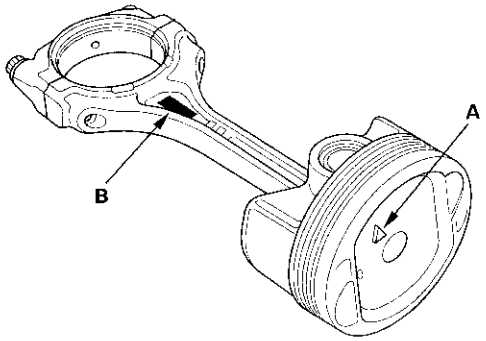

2. Insert the pilot collar (A) into the piston and the connecting rod.

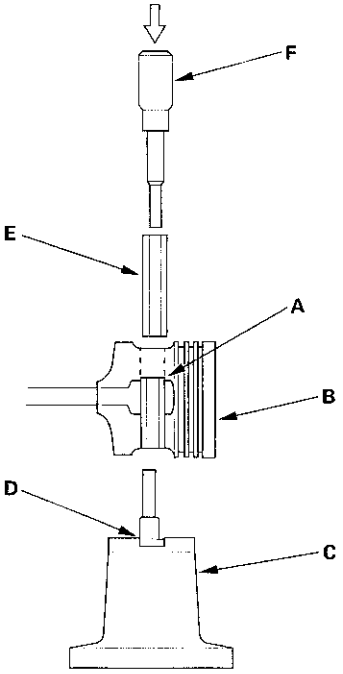

3. With the arrow on top of the piston and the embossed mark on the connecting rod facing up, place the piston assembly (B) on the piston base (C). Be sure you position the recessed flat area of the piston against the piston base head inserts (D) as shown.

4. Press the pin (E) in with the piston pin driver (F) and a hydraulic press.

Piston Ring Replacement

1. Remove the piston from the engine block (see page 7-12).

2. Using a ring expander (A), remove the old piston rings (B).

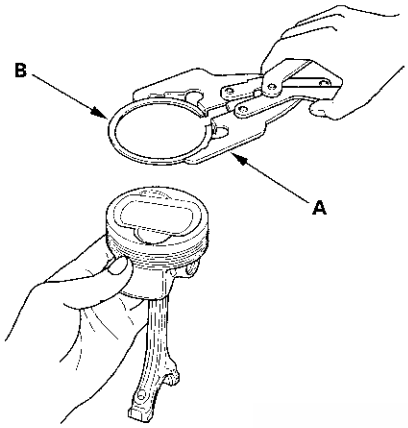

3. Clean all the ring grooves thoroughly with a squared-off broken ring, or a ring groove cleaner with a blade to fit the piston grooves. File down the blade, if necessary. The top ring grooves are 1.0 mm (0.04 in.) wide, the second ring groove is 1.2 mm (0.05 in.) wide, and the oil ring groove is 2.0 mm (0.08 in.) wide. Do not use a wire brush to clean the ring grooves, or cut the ring grooves deeper with the cleaning tool.

   NOTE: If the piston is to be separated from the connecting rod, do not install new rings yet.

4. Using a piston, push a new ring (A) into the cylinder bore 15—20 mm (0.6—0.8 in.) from the bottom.

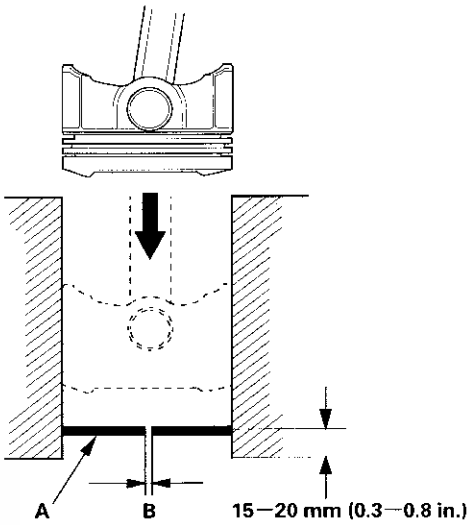

5. Measure the piston ring end-gap (B) with a feeler gauge:

   - If the gap is too small, check to see if you have the proper rings for your engine.
   - If the gap is too large, recheck the cylinder bore diameter against the wear limits (see page 7-15). If the bore is over the service limit, the engine block must be rebored.

Piston Ring End-Gap

Top Ring:	
Standard (New):	**0.15—0.30 mm (0.006—0.012 in.)**
Service Limit:	**0.60 mm (0.024 in.)**
Second Ring:	
Standard (New):	**0.35—0.50 mm (0.014—0.020 in.)**
Service Limit:	**0.65 mm (0.026 in.)**
Oil Ring:	
Standard (New):	**0.20—0.70 mm (0.008—0.028 in.)**
Service Limit:	**0.80 mm (0.031 in.)**

(cont'd)

Piston Ring Replacement (cont'd)

6. Install the rings as shown. The top ring (A) has a Z1R mark and the second ring (B) has a R mark. The manufacturing marks (C) must be facing upward.

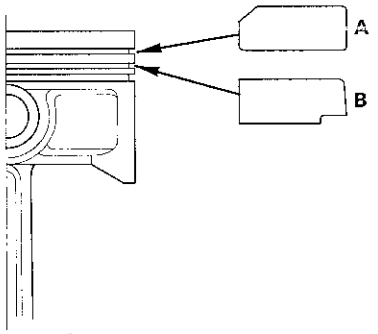

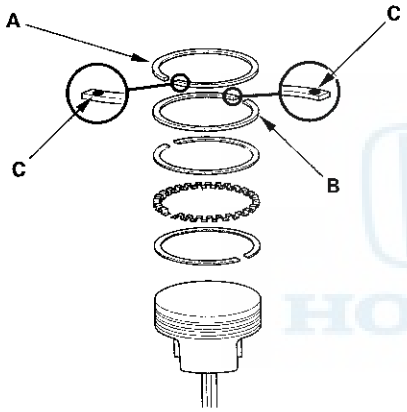

Piston Ring Dimensions:

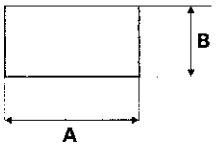

Top Ring (Standard)
A: 2.3 mm (0.09 in.)
B: 1.0 mm (0.04 in.)

Second Ring (Standard)
A: 3.0 mm (1.2 in.)
B: 1.2 mm (0.05 in.)

7. After installing a new set of rings, measure the ring-to-groove clearances:

Top Ring Clearance
Standard (New): 0.065—0.090 mm (0.0025—0.0035 in.)
Service Limit: 0.15 mm (0.006 in.)

Second Ring Clearance
Standard (New): 0.030—0.055 mm (0.0012—0.0022 in.)
Service Limit: 0.13 mm (0.005 in.)

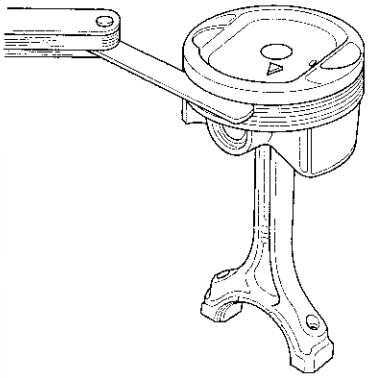

8. Rotate the rings in their grooves to make sure they do not bind.

9. Position the ring end gaps as shown:

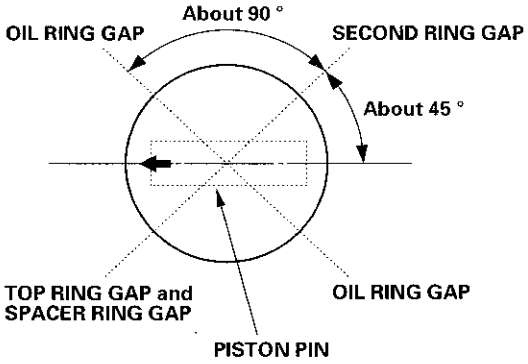

Piston Installation

If the Crankshaft is Already Installed

1. Set the crankshaft to bottom dead center (BDC) for each cylinder.

2. Apply new engine oil to the piston, inside of the ring compressor, and the cylinder bore.

3. Remove the connecting rod caps, then install the ring compressor, and check that the bearing is securely in place.

4. Position the piston/connecting rod assembly with the arrow (A) facing the cam chain side of the engine.

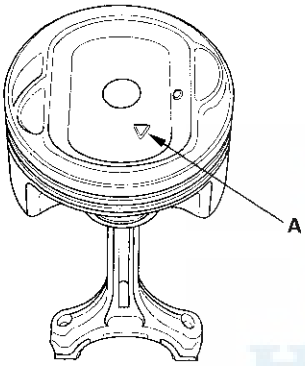

5. Position the piston/connecting rod assembly in the cylinder, and tap it in using the wooden handle of a hammer (A).
   Maintain downward force on the ring compressor (B) to prevent the rings from expanding before entering the cylinder bore.

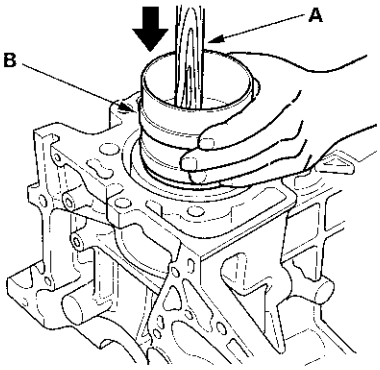

6. Stop after the ring compressor pops free, and check the connecting rod-to-rod journal alignment before pushing the piston into place.

7. Check the connecting rod bearing clearance with plastigage (see page 7-8).

8. Inspect the connecting rod bolts (see page 7-24).

9. Apply new engine oil to the bolt threads, then install the rod caps with bearings. Tighten the bolts to 10 N·m (1.0 kgf·m, 7.2 lbf·ft).

10. Tighten the connecting rod bolts an additional 90 °.

    NOTE: Remove the connecting rod bolt if you tightened it beyond the specified angle, and go back to step 7 of the procedure. Do not loosen it back to the specified angle.

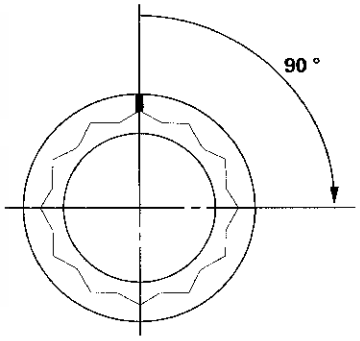

(cont'd)

Piston Installation (cont'd)

If the Crankshaft is Not Installed

1. Apply new engine oil to the piston, inside of the ring compressor, and the cylinder bore.

2. Remove the connecting rod caps, then install the ring compressor, and check that the bearing is securely in place.

3. Position the piston/connecting rod assembly with the arrow (A) facing the cam chain side of the engine.

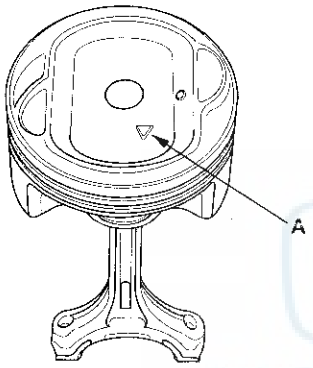

4. Position the piston/connecting rod assembly in the cylinder, and tap it in using the wooden handle of a hammer (A).
   Maintain downward force on the ring compressor (B) to prevent the rings from expanding before entering the cylinder bore.

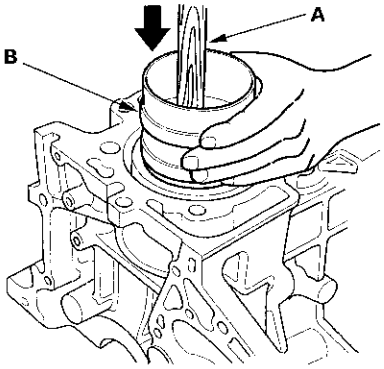

5. Position all pistons at top dead center (TDC).

Connecting Rod Bolt Inspection

1. Measure the diameter of each connecting rod bolt at point A and point B with a micrometer.

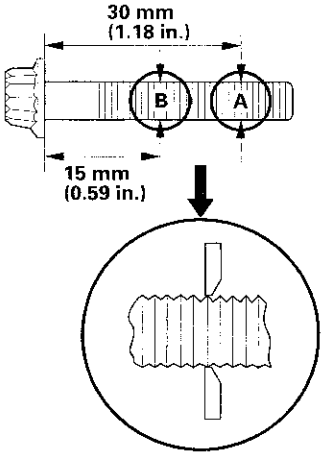

2. Calculate the difference in diameter between point A and point B.

   Point A—Point B = Difference in Diameter

   Difference in Diameter
   Specification: 0—0.05 mm (0—0.002 in.)

3. If the difference in diameter is out of tolerance, replace the connecting rod bolt.

Crankshaft Installation

Special Tools Required
- Driver 07749-0010000
- Oil seal driver attachment 07ZAD-PNA0100

1. Check the connecting rod bearing clearance with plastigage (see page 7-8).

2. Check the main bearing clearance with plastigage (see page 7-6).

3. Install the bearing halves in the engine block and the connecting rods.

4. Apply new engine oil to the inside of the main bearings and the rod bearings.

5. Hold the crankshaft so rod journal No. 2 and rod journal No. 3 are straight up, then lower the crankshaft into the engine block.

6. Apply new engine oil to the thrust washer surfaces. Install the thrust washers (A) in the No. 4 journal of the engine block.

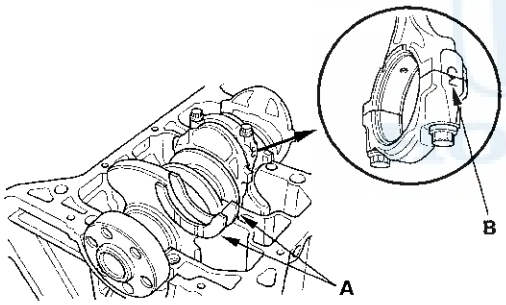

7. Inspect the connecting rod bolts (see page 7-24).

8. Apply new engine oil to the threads of the connecting rod bolts.

9. Seat the rod journals into the connecting rod No. 1 and the connecting rod No. 4. Line up the mark (B) on the connecting rod and cap, then install the caps and bolts finger-tight.

10. Rotate the crankshaft clockwise, and seat the rod journals into the connecting rod No. 2 and the connecting rod No. 3. Line up the mark on the connecting rod and cap, then install the caps and bolts finger-tight.

11. Tighten the connecting rod bolts to 10 N·m (1.0 kgf·m, 7.2 lbf·ft).

12. Tighten the connecting rod bolts an additional 90 °.

    NOTE: Remove the connecting rod bolt if you tightened it beyond the specified angle, and go back to step 7 of the procedure. Do not loosen it back to the specified angle.

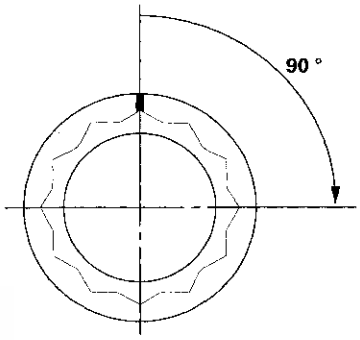

13. Remove all of the old liquid gasket from the bearing cap mating surfaces.

14. Clean and dry the bearing cap mating surfaces.

15. Apply a 1.5 mm wide bead of the liquid gasket, P/N 08717-0004, 08718-0001, 08718-0003, or 08718-0009, along the broken lines (A). Install the component within 5 minutes of applying the liquid gasket.

    NOTE:
    - If you apply liquid gasket P/N 08718-0012, the component must be installed within 4 minutes.
    - If too much time has passed after applying the liquid gasket, remove the old liquid gasket and residue, then reapply new liquid gasket.

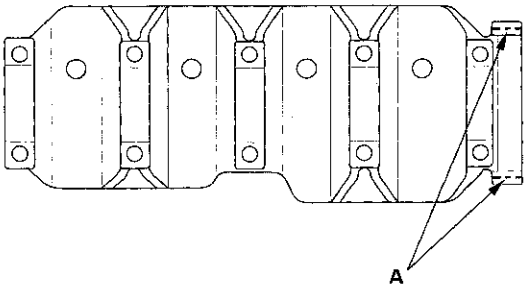

(cont'd)

Crankshaft Installation (cont'd)

16. Put the bearing cap on the engine block.

17. Apply new engine oil to the threads of the bearing cap bolts.

18. Tighten the bearing cap bolts in sequence to 25 N·m (2.5 kgf·m, 18 lbf·ft).

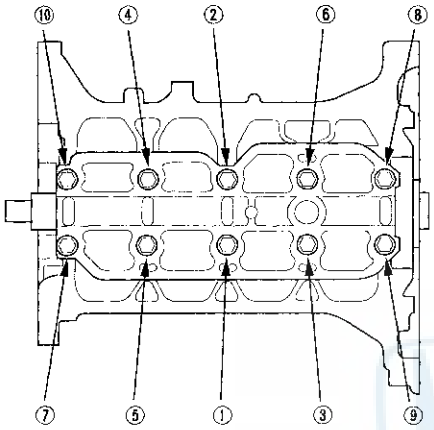

19. Tighten the bearing cap bolts an additional 40 °.

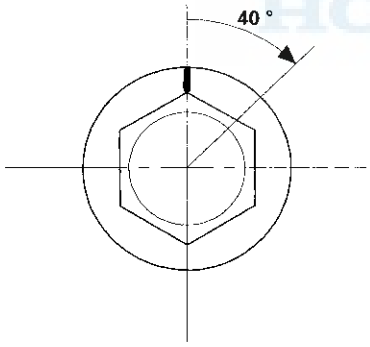

20. Clean the excess liquid gasket off the engine block.

21. Apply a light coat of new engine oil around the crankshaft oil seal.

22. Apply a light coat of new engine oil to the lip of the crankshaft oil seal.

23. Use the driver and the oil seal driver attachment to drive a new crankshaft oil seal squarely into the engine block to the specified installed height.

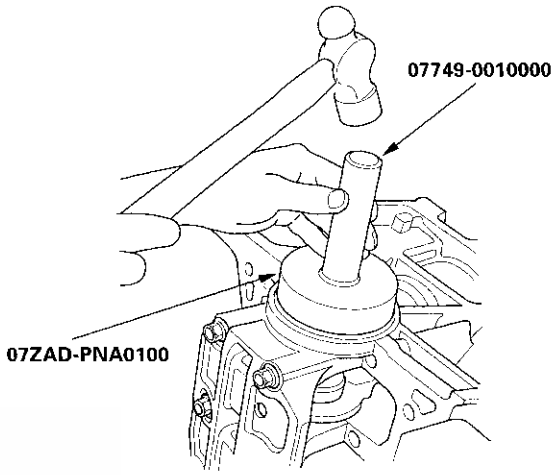

24. Measure the distance between the crankshaft (A) and the oil seal (B).

Oil Seal Installed Height: 7—8 mm (0.28—0.31 in.)

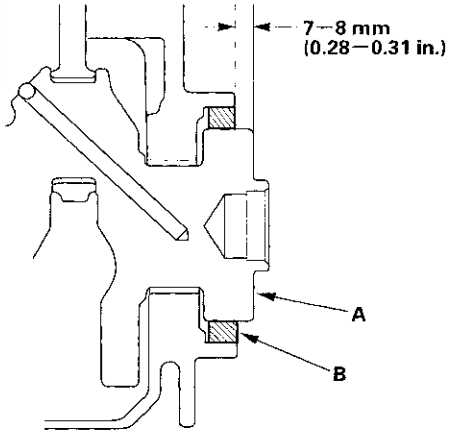

25. Install the dowel pins (A) and a new O-ring (B) on the oil pump (C), then align the inner rotor with the crankshaft, and install the oil pump.

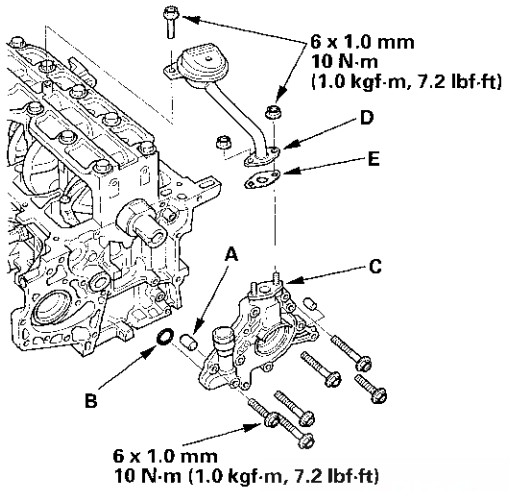

26. Install the oil screen (D) with a new gasket (E).

27. Install the cylinder head (see page 6-45).

28. Install the cam chain (see page 6-16).

29. Install the IMA motor housing (see page 12-195).

30. Install the engine/IMA motor/transmission assembly (see page 5-12).

    NOTE: When any crankshaft or connecting rod bearing is replaced, run the engine at idle until it reaches normal operating temperature, then continue to run it for about 15 minutes.

Oil Pan Installation

1. Remove all of the old liquid gasket from the oil pan mating surfaces, the bolts, and the bolt holes.

2. Clean and dry the oil pan mating surfaces and the O-ring groove.

3. Install the dowel pins (A), and install the new O-ring (B) and the oil pan gasket (C) on the oil pan.

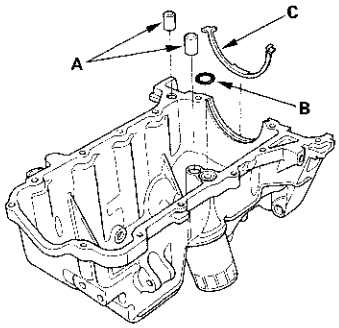

4. Apply liquid gasket, P/N 08718-0001, or 08718-0009, evenly to the engine block mating surface of the oil pan and to the inside edge of the threaded bolt holes. Install the component within 5 minutes of applying the liquid gasket.

   NOTE:
   - Apply a 1.5 mm wide bead of the liquid gasket along the broken line (A).
   - Apply a 5.0 mm wide bead of the liquid gasket to the shaded area (B).
   - If you apply liquid gasket P/N 08718-0012, the component must be installed within 4 minutes.
   - If too much time has passed after applying the liquid gasket, remove the old liquid gasket and residue, then reapply new liquid gasket.

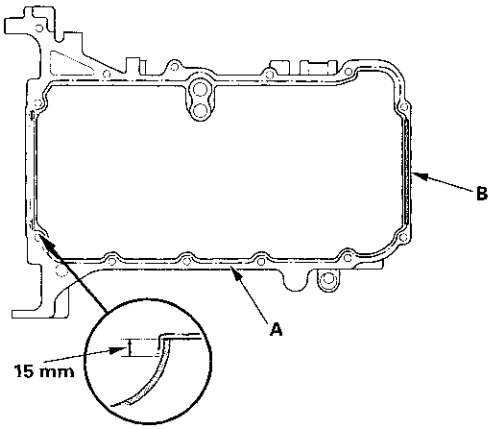

(cont'd)

Oil Pan Installation (cont'd)

5. Install the oil pan.

   NOTE: Raise the oil pan carefully not to damage IMA motor (resolver stator).

6. Tighten the bolts in three steps. Wipe off the excess liquid gasket on the each side of the crankshaft pulley and the flywheel.

   Specified Torque
   ①: 24 N·m (2.4 kgf·m, 17 lbf·ft)
   ②—⑬: 12 N·m (1.2 kgf·m, 8.7 lbf·ft)

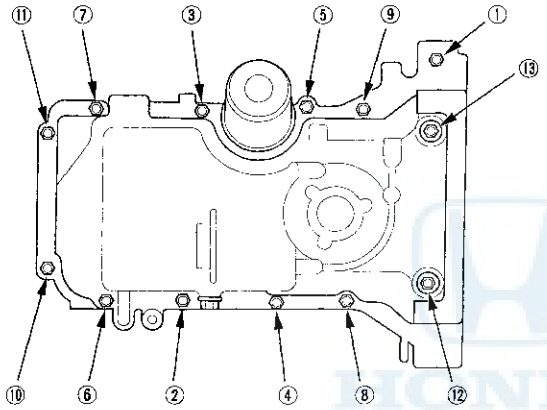

7. Tighten the two bolts securing the transmission.

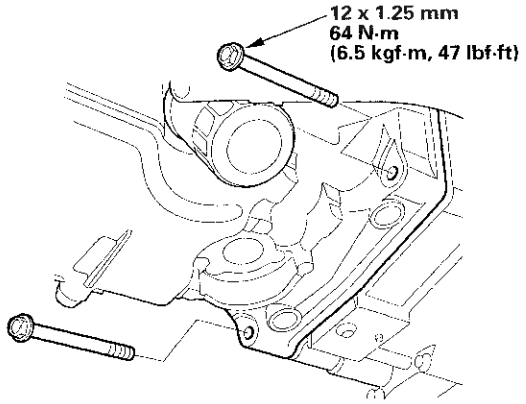

8. Install the lower torque rod bracket mounting bolts.

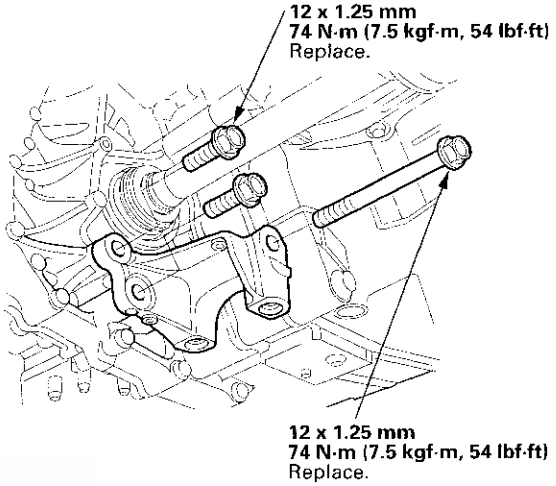

9. Install the dipstick tube (A) with a new O-ring (B), then install the mounting bolt (C) and the harness clamps (D).

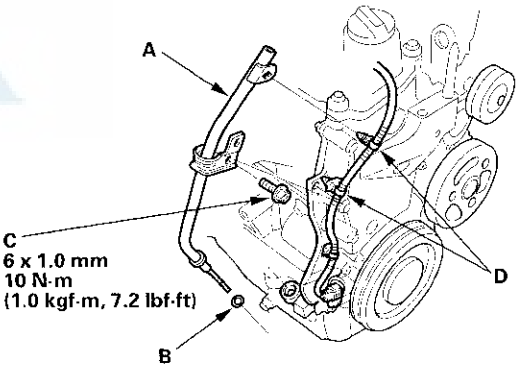

10. If the engine is still in the vehicle, do the following steps.

11. Using the front subframe adapter (see step 9 on page 5-14), then loosely install the new front subframe mounting bolts (see step 11 on page 5-14).

12. Align the reference marks with the edge of the body, then tighten the mounting bolts (see step 12 on page 5-15).

13. Tighten the mid stiffener mounting bolts (see step 14 on page 5-15).

14. Install the lower torque rod mounting bolts (see step 15 on page 5-15).

15. Remove the engine support hanger and the universal lifting eyelet.

16. Connect the steering gearbox harness connectors (see step 22 on page 5-16).

17. Connect the suspension lower arm ball joints (see page 18-20).

18. Connect the front stabilizer links (see page 18-25).

19. Install the under-floor three way catalytic converter (TWC) (see step 26 on page 5-16).

20. Install the intake manifold bracket and the harness clamp (see step 8 on page 9-6).

21. Install the A/C compressor, then connect the A/C compressor clutch connector (see step 38 on page 5-18).

22. Install the A/C condenser fan shroud assembly (see page 10-12).

23. Install the splash shield and the front undercover (see step 27 on page 5-16).

24. Install the front wheels.

25. Install the steering joint bolt (see step 35 on page 5-18), then install the steering wheel (see page 17-9).

26. After assembly, wait at least 30 minutes before filling the engine oil.

27. Check the wheel alignment (see page 18-6).

Transmission End Crankshaft Oil Seal Installation - In Car

Special Tools Required
- Driver 07749-0010000
- Oil seal driver attachment 07ZAD-PNA0100

1. Remove the IMA motor housing (see page 12-195).

2. Remove the transmission end crankshaft oil seal.

3. Clean and dry the crankshaft oil seal housing.

4. Apply a light coat of new engine oil around the crankshaft oil seal.

5. Apply a light coat of new engine oil to the crankshaft and to the lip of the crankshaft oil seal.

6. Using the driver and the oil seal driver attachment, drive in the crankshaft oil seal until the driver attachment bottoms against the engine block. Align the hole in the driver attachment with the pin on the crankshaft.

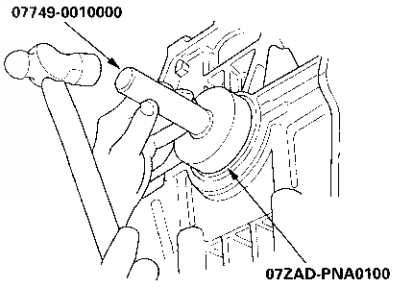

7. Measure the distance between the crankshaft (A) and the oil seal (B).

Oil Seal Installed Height: 7—8 mm (0.28—0.31 in.)

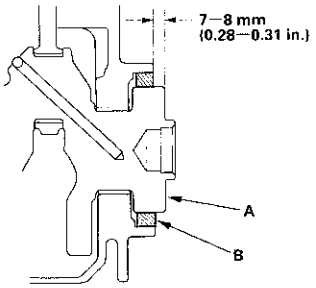

8. Clean any excess grease off the crankshaft, and check that the oil seal lip is not distorted.

9. Install the IMA motor housing (see page 12-195).

Sealing Bolt Installation

NOTE: When installing the sealing bolt, always use a new washer.

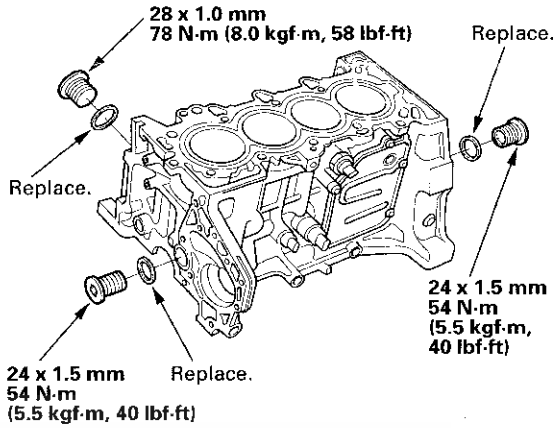

Engine Mechanical

Engine Lubrication

Special Tools 8-2
Component Location Index 8-3
Symptom Troubleshooting Index 8-4
Low Oil Pressure Indicator Circuit Diagram 8-5
Low Oil Pressure Indicator Circuit
Troubleshooting (Open) 8-6
Low Oil Pressure Indicator Circuit
Troubleshooting (Short) 8-7
Oil Pressure Switch Test 8-8
Oil Pressure Switch Replacement 8-8
Oil Pressure Test 8-9
Engine Oil Replacement 8-10
Engine Oil Filter Replacement 8-11
Oil Filter Feed Pipe Replacement 8-12
Oil Pump Overhaul 8-13
Oil/Air Separator Installation 8-16

Special Tools

Ref. No.	Tool Number	Description	Qty
①	07AAA-PLCA100	Oil Filter Wrench	1
②	07NAJ-P07010A	Pressure Gauge Adapter	1
③	07ZAJ-S5AA200	Oil Pressure Hose	1
④-1	07406-0020201	A/T Pressure Hose	1
④-2	07406-0070301	A/T Low Pressure Gauge W/Panel	1
④-3	07MAJ-PY4011A	A/T Pressure Hose, 2,210 mm	1
④-4	07MAJ-PY40120	A/T Pressure Hose, Adapter	1

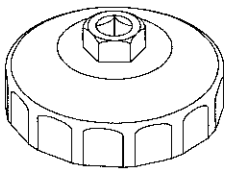

①

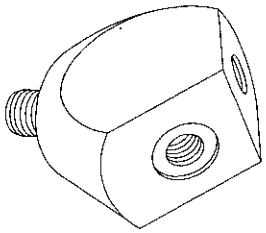

②

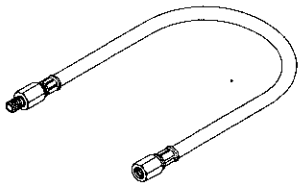

③

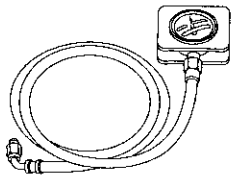

④-1, ④-2, ④-3, ④-4

Component Location Index

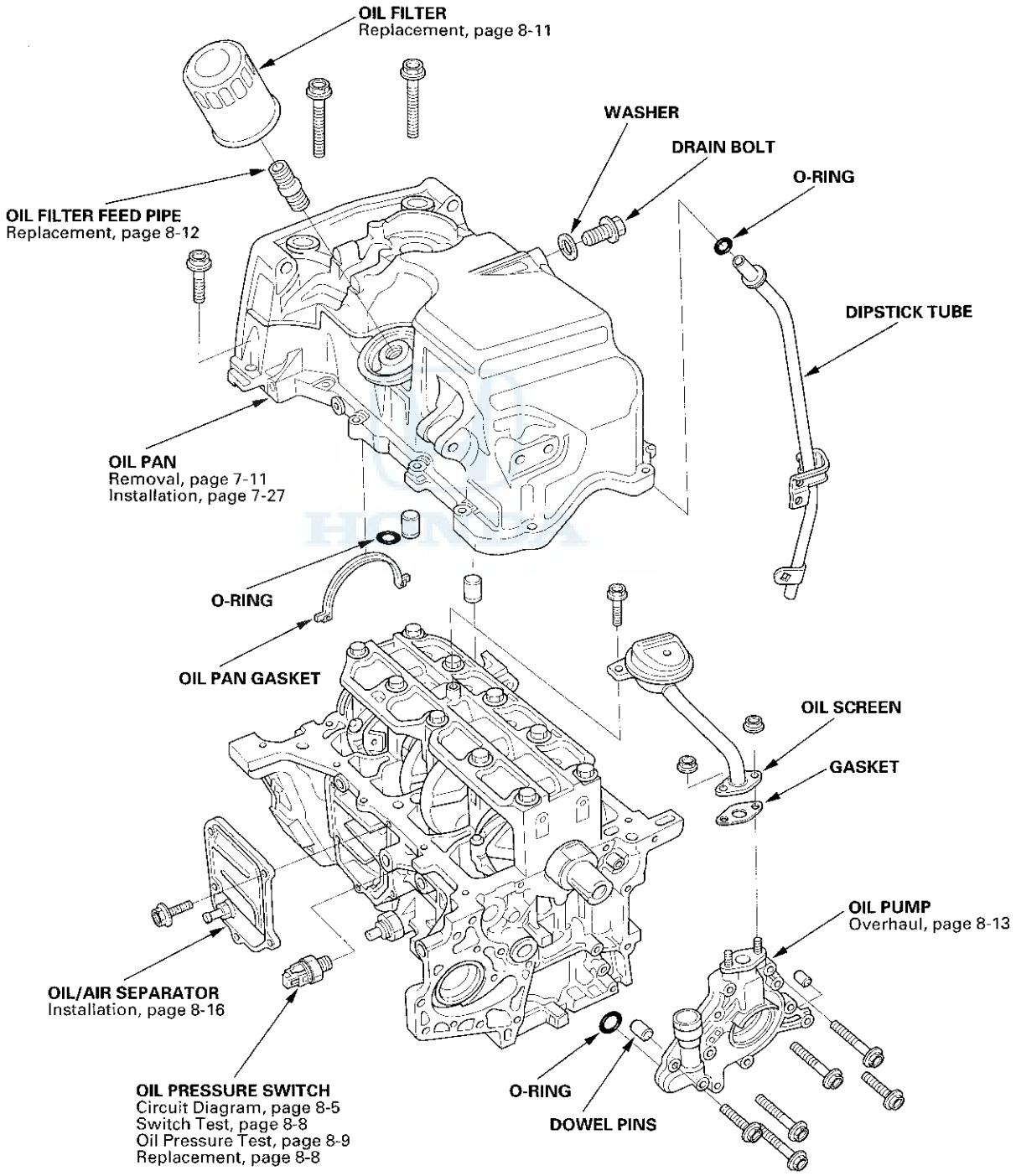

Symptom Troubleshooting Index

Symptom	Diagnostic procedure	Also check for
Excessive engine oil consumption	1. Verify the engine oil filler cap, the oil drain bolt, and the oil filter are tight. 2. Check for oil leaks. 3. Check for worn valve guide(s) (see page 6-39) or worn valve stem seal(s) (see page 6-39). 4. Check for a damaged or worn piston ring(s) (see page 7-21). 5. Check for damaged or worn engine internal parts (cylinder wall, pistons, etc.) (see page 7-15).	Check the maintenance records, worn out engine oil will burn off at a highter rate
Low oil pressure indicator does not come on with the ignition switch in ON (II)	1. Do the low oil pressure indicator circuit troubleshooting (Open) (see page 8-6). 2. Test the oil pressure switch (see page 8-8).	An open in the wire between the gauge control module (TACH) and the oil pressure switch
Low oil pressure indicator stays on	1. Check the engine oil level. 2. Do the low oil pressure indicator circuit troubleshooting (Short) (see page 8-7). 3. Test the oil pressure switch (see page 8-8). 4. Check the engine oil pressure (see page 8-9). 5. Check the oil filter for clogging. 6. Check the oil screen for clogging. 7. Check the relief valve. 8. Test the oil pump (see page 8-14).	A wire shorted to ground between the gauge control module (TACH) and the oil pressure switch

HONDA

Low Oil Pressure Indicator Circuit Diagram

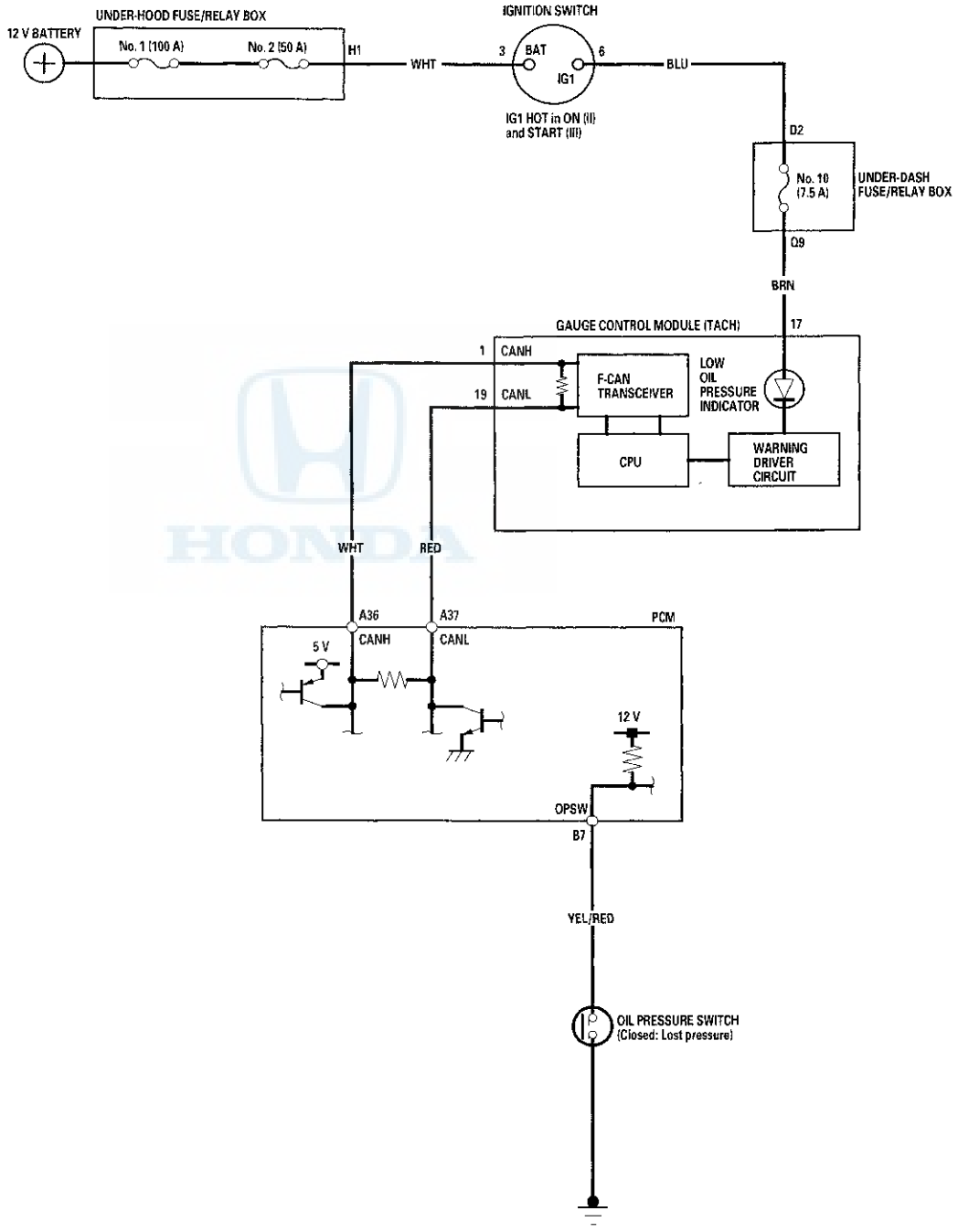

Low Oil Pressure Indicator Circuit Troubleshooting (Open)

1. Connect the Honda Diagnostic System (HDS) to the data link connector (DLC) (see step 2 on page 11-3).

2. Turn the ignition switch to ON (II).

3. Make sure the HDS communicates with the vehicle and the powertrain control module (PCM). If it does not communicate, troubleshoot the DLC circuit (see page 11-213).

4. Check for DTCs (see page 11-3). If a DTC is present, diagnose, and repair the cause before continuing with this test.

5. Check the OIL PRESSURE SWITCH in the PGM-FI DATA LIST with the HDS.

   Is ON indicated?

   YES—Replace the gauge control module (TACH) (see page 22-255).■

   NO—Go to step 6.

6. Turn the ignition switch to LOCK (0), then check the oil pressure switch (see page 8-8).

   Is the oil pressure switch OK?

   YES—Go to step 7.

   NO—Replace the oil pressure switch (see page 8-8). ■

7. Turn the ignition switch to ON (II), and jump the SCS line with the HDS, then turn the ignition switch to LOCK (0).

   NOTE: This step must be done to protect the PCM from damage.

8. Disconnect PCM connector B (44P) and the oil pressure switch connector.

9. Check for continuity between PCM connector terminal B7 and the oil pressure switch connector.

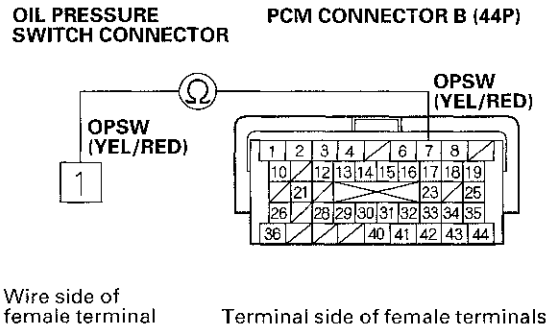

   Is there continuity?

   YES—Update the PCM if it does not have the latest software (see page 11-236), or substitute a known-good PCM (see page 11-7), then recheck. If the symptom/indication goes away with a known-good PCM, replace the original PCM (see page 11-238).■

   NO—Repair open in the wire between the oil pressure switch and PCM connector terminal B7.■

Low Oil Pressure Indicator Circuit Troubleshooting (Short)

1. Connect the Honda Diagnostic System (HDS) to the data link connector (DLC) (see step 2 on page 11-3).

2. Turn the ignition switch to ON (II).

3. Make sure the HDS communicates with the vehicle and the powertrain control module (PCM). If it does not communicate, troubleshoot the DLC circuit (see page 11-213).

4. Check for DTCs (see page 11-3). If a DTC is present, diagnose, and repair the cause before continuing with this test.

5. Start the engine, and check the OIL PRESSURE SWITCH in the PGM-FI DATA LIST with the HDS.

   Is OFF indicated?

   YES—Replace the gauge control module (TACH) (see page 22-255). ■

   NO—Go to step 6.

6. Turn the ignition switch to LOCK (0).

7. Disconnect the oil pressure switch connector (see page 8-8).

8. Start the engine, and check the OIL PRESSURE SWITCH in the PGM-FI DATA LIST with the HDS.

   Is OFF indicated?

   YES—Turn the ignition switch to LOCK (0), then go to step 9.

   NO—Turn the ignition switch to LOCK (0), then go to step 10.

9. Check the oil pressure switch (see page 8-8).

   Is the oil pressure switch OK?

   YES—Do the oil pressure test (see page 8-9).

   NO—Replace the oil pressure switch (see page 8-8). ■

10. Turn the ignition switch to ON (II), and jump the SCS line with the HDS, then turn the ignition switch to LOCK (0).

    NOTE: This step must be done to protect the PCM from damage.

11. Disconnect PCM connector B (44P).

12. Check for continuity between the oil pressure switch connector and body ground.

OIL PRESSURE SWITCH CONNECTOR

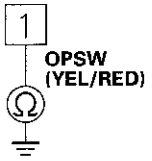

Wire side of female terminal

Is there continuity?

YES—Repair short to ground in the wire between the oil pressure switch and PCM connector terminal B7. ■

NO—Update the PCM if it does not have the latest software (see page 11-236), or substitute a known-good PCM (see page 11-7), then recheck. If the symptom/indication goes away with a known-good PCM, replace the original PCM (see page 11-238). ■

Oil Pressure Switch Test

1. Remove the front undercover and the splash shield (see step 21 on page 5-5).

2. Remove the A/C condenser fan shroud assembly (see page 10-12).

3. Remove the A/C compressor without disconnecting the A/C hoses (see step 27 on page 5-6).

   NOTE: Hang the A/C compressor with a rope.

4. Disconnect the oil pressure switch connector (A) from the oil pressure switch (B).

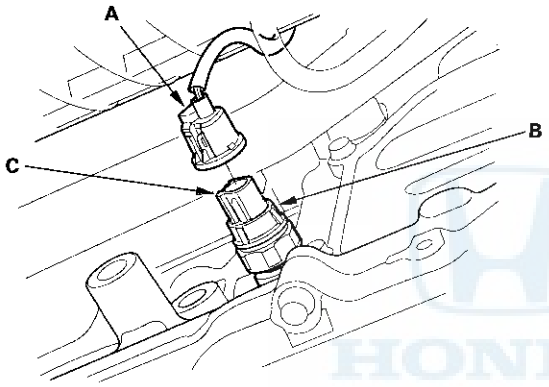

5. Check for continuity between the positive terminal (C) and the engine (ground). There should be continuity with the engine stopped. There should be no continuity with the engine running.

Oil Pressure Switch Replacement

1. Remove the front undercover and the splash shield (see step 21 on page 5-5).

2. Remove the A/C condenser fan shroud assembly (see page 10-12).

3. Remove the A/C compressor without disconnecting the A/C hoses (see step 27 on page 5-6).

   NOTE: Hang the A/C compressor with a rope.

4. Disconnect the oil pressure switch connector (A), then remove the oil pressure switch (B).

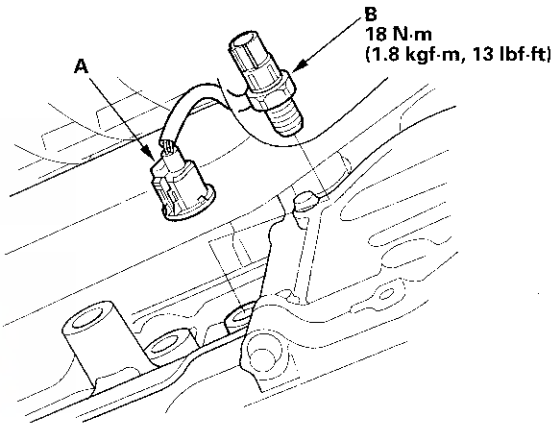

5. Remove all of the old liquid gasket from the switch and the switch mounting hole.

6. Apply a very small amount of liquid gasket to the oil pressure switch threads, then install the oil pressure switch.

   NOTE: Using too much liquid gasket may cause liquid gasket to enter the oil passage or the end of the new oil pressure switch.

7. Loosely install the compressor mounting bolts and the compressor through bolt in the numbered sequence shown. Failure to follow this sequence may reduce the life of the drive (see step 38 on page 5-18).

8. Install the A/C condenser fan shroud assembly (see page 10-12).

9. Install the splash shield and the front undercover (see step 27 on page 5-16).

Oil Pressure Test

Special Tools Required
- Pressure gauge adapter 07NAJ-P07010A
- Oil pressure hose 07ZAJ-S5AA200
- A/T pressure hose 07406-0020201
- A/T low pressure gauge w/panel 07406-0070301
- A/T pressure hose, 2,210 mm 07MAJ-PY4011A
- A/T pressure hose, adapter 07MAJ-PY40120

If the low oil pressure indicator stays on with the engine running, check the engine oil level. If the oil level is correct:

1. Remove the rocker arm oil pressure sensor (A) (see page 11-317), and install the oil pressure hose, the pressure gauge adapter, the A/T pressure hose, the A/T low pressure gauge w/panel, the A/T pressure hose, 2,210 mm, and the A/T pressure hose, adapter, then reinstall the rocker arm oil pressure sensor.

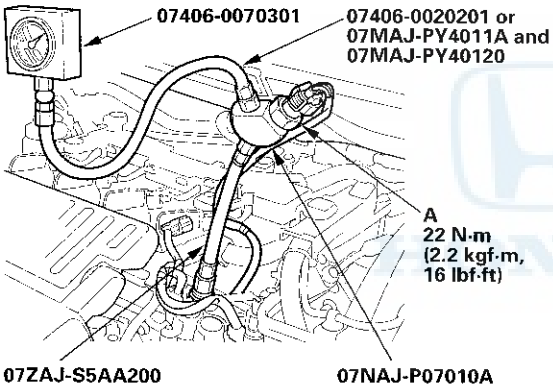

2. Start the engine. Shut it off immediately if the gauge registers no oil pressure. Repair the problem before continuing.

3. Allow the engine to reach operating temperature (fan comes on at least twice). The pressure should be:

   Engine Oil Temperature: 176 °F (80 °C)
   Engine Oil Pressure:
   At Idle: 70 kPa (0.7 kgf/cm², 10 psi) min.
   At 3,000 rpm: 340 kPa (3.5 kgf/cm², 50 psi) min.

4. If the oil pressure is not within specifications, inspect these items:

   - Blocking of oil filter.
   - Inspect the oil pressure relief valve (see page 8-13).
   - Blocking of oil screen.
   - Inspect the oil pump (see page 8-14).

Engine Oil Replacement

1. Warm up the engine.

2. Remove the five clips and the two bolts securing the front undercover, then open the front undercover.

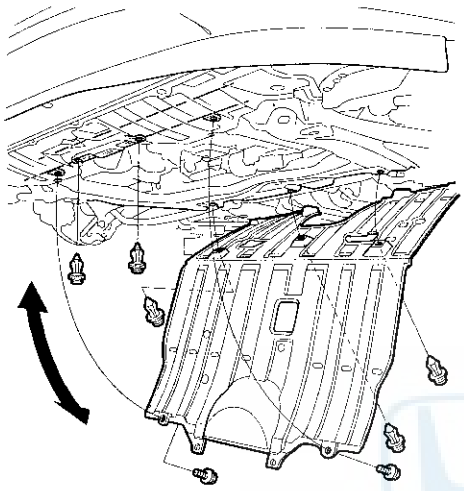

3. Remove the drain bolt (A), and drain the engine oil.

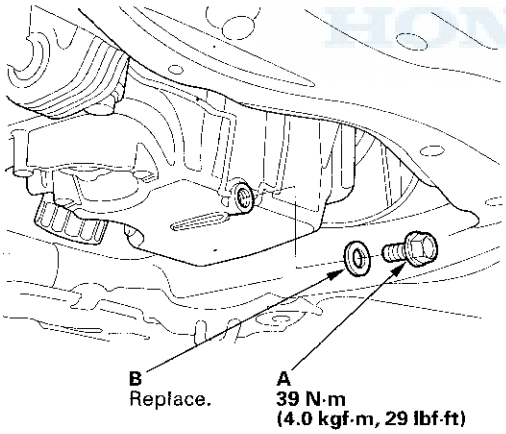

4. Reinstall the drain bolt with a new washer (B).

5. Refill the engine with the recommended engine oil (see page 3-2).

Capacity
At Oil Change:
3.0 L (3.2 US qt)
At Oil Change including Filter:
3.2 L (3.4 US qt)
After Engine Overhaul:
3.8 L (4.0 US qt)

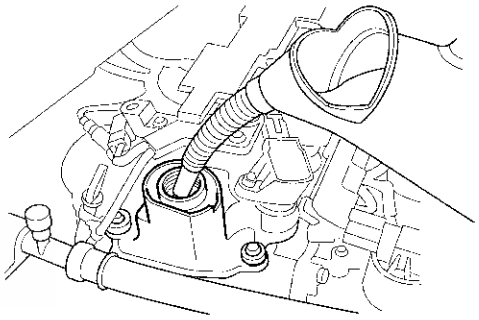

6. Install the front undercover.

7. Run the engine for more than 3 minutes, then check for oil leakage.

8. If the maintenance minder required engine oil replacement, reset the maintenance minder (see page 3-4), and this procedure is complete. If the maintenance minder did not require engine oil replacement, go to step 9.

9. Turn the ignition switch to LOCK (0).

10. Connect the Honda Diagnostic System (HDS) to the data link connector (DLC) (see step 2 on page 11-3).

11. Turn the ignition switch to ON (II).

12. Make sure the HDS communicates with the vehicle and the powertrain control module (PCM). If it does not communicate, troubleshoot the DLC circuit (see page 11-213).

13. Select GAUGES in the BODY ELECTRICAL with the HDS.

14. Select ADJUSTMENT in the GAUGES with the HDS.

15. Select SERVICE REMINDER in the ADJUSTMENT with the HDS.

16. Select RESET in the SERVICE REMINDER with the HDS.

17. Select RESETTING THE ENGINE OIL LIFE with the HDS.

    NOTE: If you changed the ATF at the same time with the engine oil, select RESETTING THE ENGINE OIL LIFE AND ATF with the HDS instead.

Engine Oil Filter Replacement

Special Tools Required
Oil filter wrench 07AAA-PLCA100

1. Remove the five clips and the two bolts securing the front undercover, then open the front undercover (see step 2 on page 8-10).

2. Remove the oil filter with the oil filter wrench.

3. Inspect the filter to make sure the rubber seal is not stuck to the oil filter seating surface of the engine.

4. Inspect the threads (A) and the rubber seal (B) on the new filter. Clean the seat on the oil pan, then apply a light coat of new engine oil to the filter rubber seal. Use only filters with a built-in bypass system.

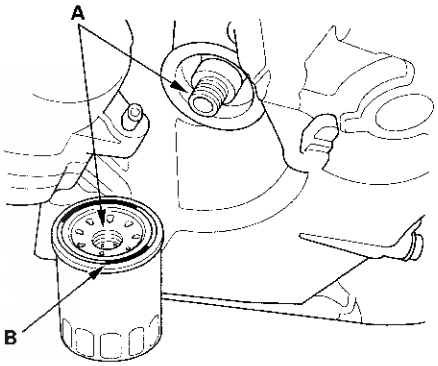

5. Install the oil filter by hand.

6. After the rubber seal seats, tighten the oil filter clockwise with the oil filter wrench.

Tighten:	**3/4 Turn Clockwise**
Tightening Torque:	**12 N·m (1.2 kgf·m, 8.7 lbf·ft)**

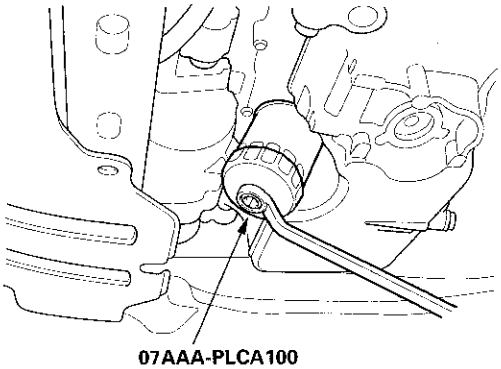

(cont'd)

Engine Oil Filter Replacement (cont'd)

7. If four numbers or marks (1 to 4 or ▼ to ▼▼▼▼) are printed around the outside of the filter, you can use the following procedure to tighten the filter.

   - Spin the filter on until its seal lightly seats against the oil pan, and note which number or mark is at the bottom.
   - Tighten the filter by turning it clockwise three numbers or marks from the one you noted. For example, if number 2 is at the bottom when the seal is seated, tighten the filter until the number 1 comes around the bottom.

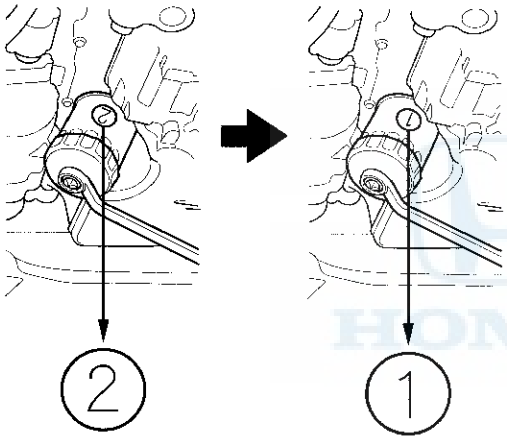

Number when rubber seal is seated.

Number after tightening.

Number or Mark when rubber seal is seated	1 or ▼	2 or ▼▼	3 or ▼▼▼	4 or ▼▼▼▼
Number or Mark after tightening	4 or ▼▼▼▼	1 or ▼	2 or ▼▼	3 or ▼▼▼

8. After installation, fill the engine with oil up to the specified level, run the engine for more than 3 minutes, then check for oil leakage.

Oil Filter Feed Pipe Replacement

1. Remove the oil filter (see page 8-11).
2. Remove the oil filter feed pipe.

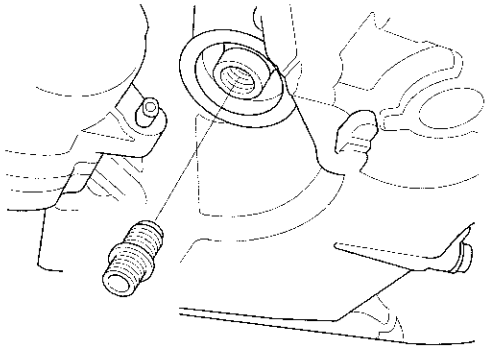

3. Install the two 20 x 1.5 mm nuts (A) onto the new oil filter feed pipe. Hold the nut with a wrench, then tighten the other nut.

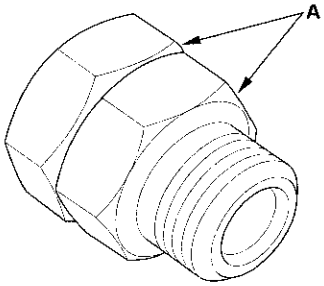

4. Tighten the oil filter feed pipe to 74 N·m (7.5 kgf·m, 54 lbf·ft), then remove the nuts from the oil filter feed pipe.
5. Install the oil filter (see page 8-11).

Oil Pump Overhaul

Exploded View

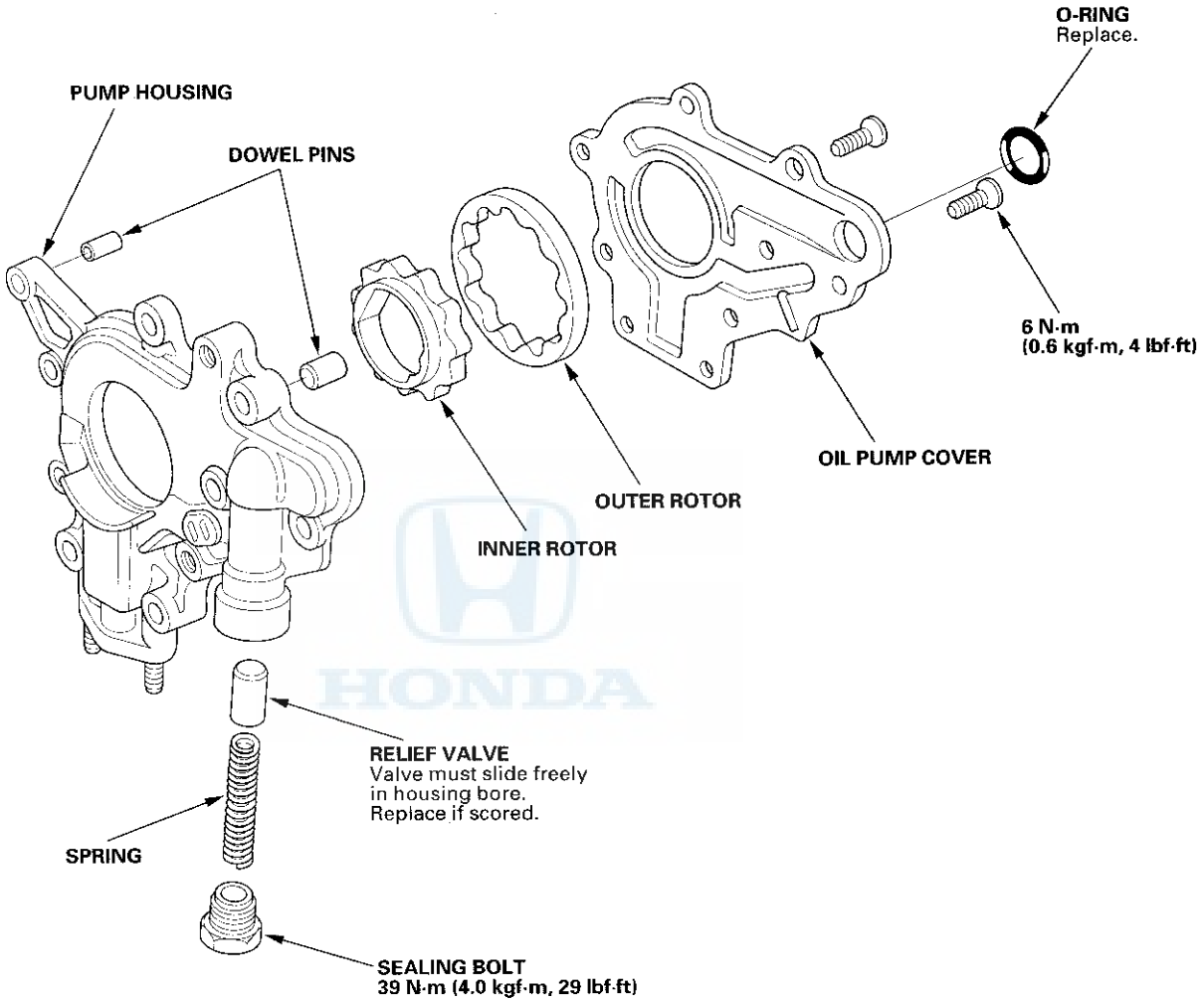

(cont'd)

Oil Pump Overhaul (cont'd)

Oil Pump Removal

1. Remove the cam chain (see page 6-14).

2. Remove the oil screen (A), then remove the oil pump (B).

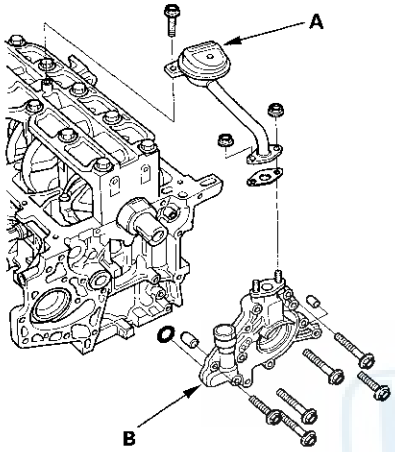

Oil Pump Inspection

1. Remove the screws from the pump housing, then separate the housing and the cover.

2. Check the inner-to-outer rotor radial clearance between the inner rotor (A) and the outer rotor (B). If the inner-to-outer rotor radial clearance exceeds the service limit, replace the oil pump.

Inner Rotor-to-Outer Rotor Radial Clearance
Standard (New): 0.02—0.14 mm (0.001—0.006 in.)
Service Limit: 0.20 mm (0.008 in.)

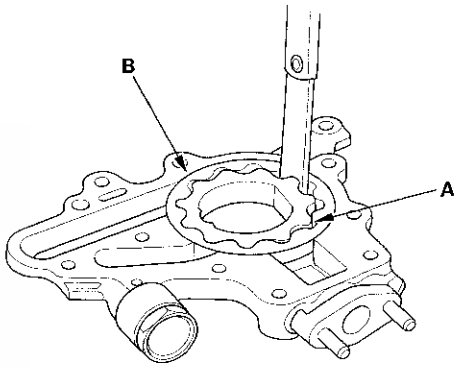

3. Check the pump housing-to-rotor axial clearance between the rotor (A) and the pump housing (B). If the pump housing-to-rotor axial clearance exceeds the service limit, replace the oil pump.

Pump Housing-to-Rotor Axial Clearance
Standard (New): 0.02—0.06 mm (0.001—0.002 in.)
Service Limit: 0.15 mm (0.006 in.)

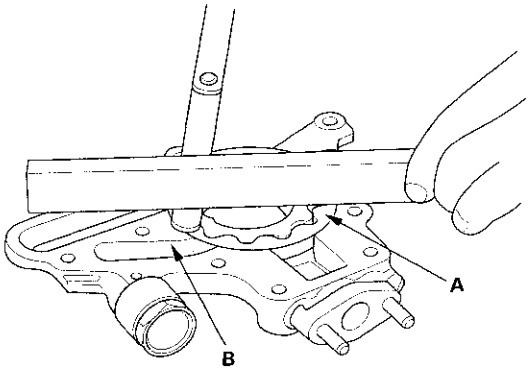

4. Check the pump housing-to-outer rotor radial clearance between the outer rotor (A) and the pump housing (B). If the pump housing-to-outer rotor radial clearance exceeds the service limit, replace the oil pump.

Pump Housing-to-Outer Rotor Radial Clearance
Standard (New): 0.10—0.18 mm (0.004—0.007 in.)
Service Limit: 0.20 mm (0.008 in.)

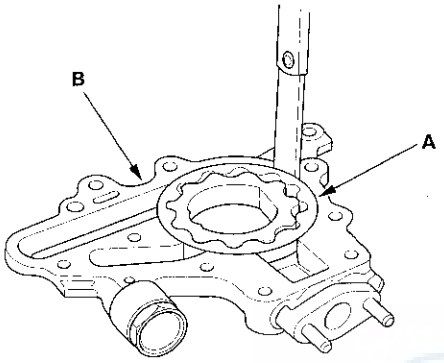

5. Inspect both rotors and the pump housing for scoring or other damage. Replace parts, if necessary.

6. Apply liquid thread lock to the pump housing screws, then install the oil pump cover.

7. Check that the oil pump turns freely.

Oil Pump Installation

1. Install the dowel pins (A) and a new O-ring (B) on the oil pump (C), then align the inner rotor with the crankshaft, and install the oil pump.

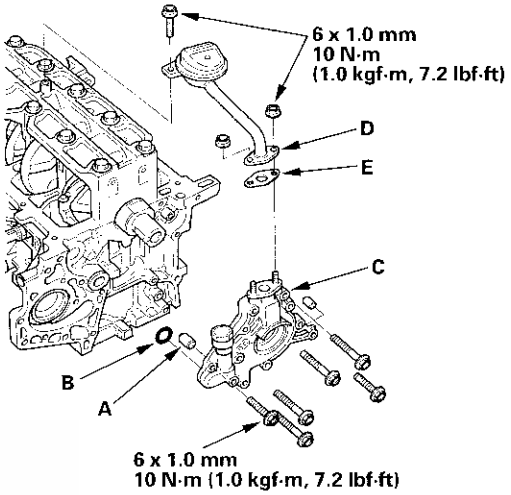

2. Install the oil screen (D) with a new gasket (E).

3. Install the cam chain (see page 6-16).

Oil/Air Separator Installation

1. Clean and dry the oil/air separator mating surfaces, the bolts, and the bolt holes.

2. Apply a 1.5 mm wide bead of the liquid gasket, P/N 08717-0004, 08718-0001, 08718-0003, or 08718-0009, along the broken line (A). Install the component within 5 minutes of applying the liquid gasket.

   NOTE:
   - If you apply liquid gasket P/N 08718-0012, the component must be installed within 4 minutes.
   - If too much time has passed after applying the liquid gasket, remove the old liquid gasket and residue, then reapply new liquid gasket.

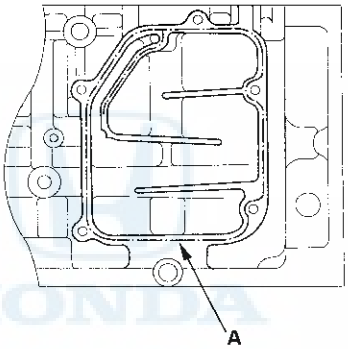

3. Install the oil/air separator.

   NOTE: Wait at least 30 minutes before filling the engine with oil.

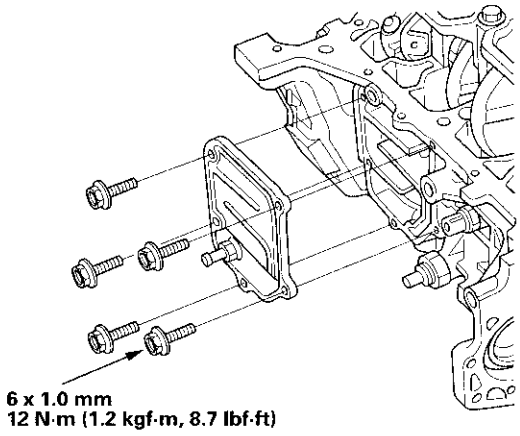

Engine Mechanical

Intake Manifold and Exhaust System

Intake Manifold Removal and Installation 9-2
Exhaust Pipe and Muffler Replacement 9-8

Intake Manifold and Exhaust System

Intake Manifold Removal and Installation

Exploded View

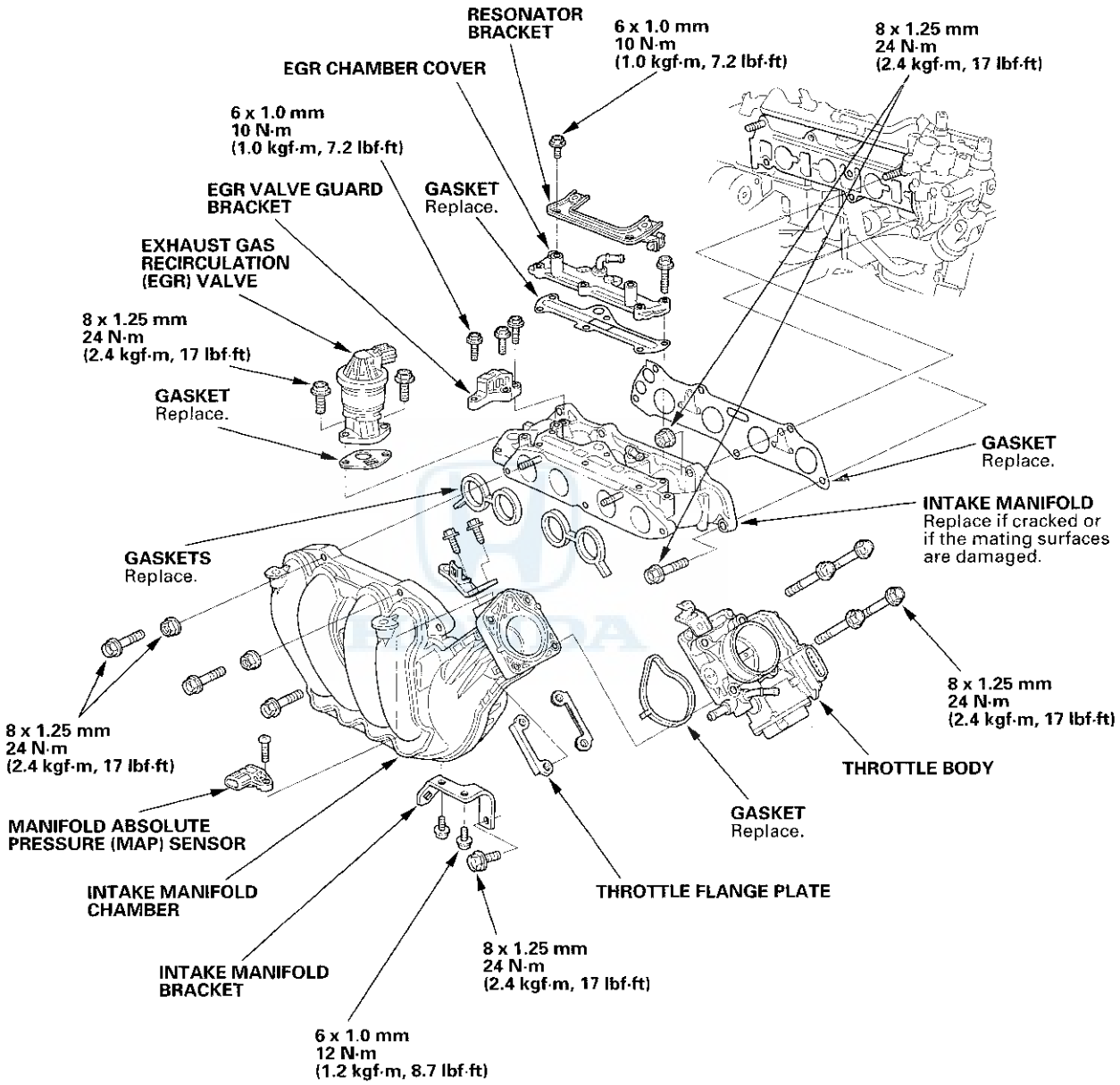

Removal

1. Drain the engine coolant (see page 10-6).
2. Remove the engine cover (see step 6 on page 5-3).
3. Remove the resonator (see page 11-371).
4. Remove the intake air duct (see step 8 on page 5-3).
5. Remove the air cleaner assembly (see page 11-370).
6. Remove the front grille cover.

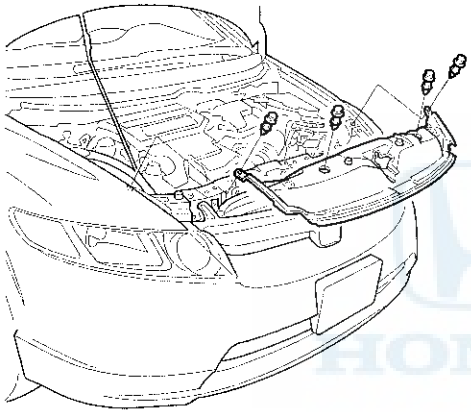

7. Raise the vehicle on the lift.
8. Remove the front wheels.
9. Remove the front undercover and the splash shield (see step 21 on page 5-5).
10. Remove the intake manifold bracket bolts (A) and the A/C compressor harness clamp (B).

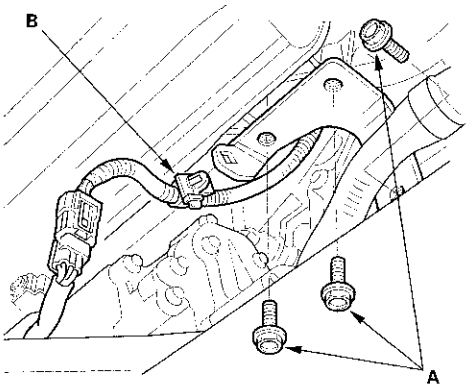

11. Lower the vehicle on the lift.
12. Disconnect the water bypass hose (A) and the vacuum hose (B), and the throttle actuator connector (C).

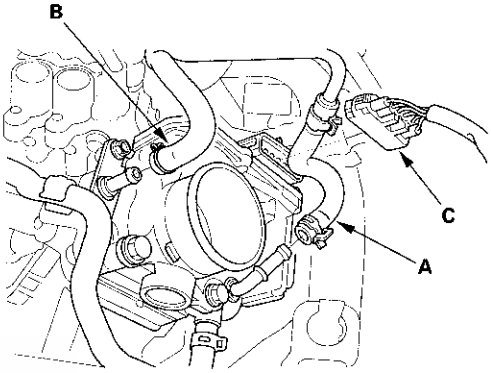

13. Disconnect the water bypass hose (A).

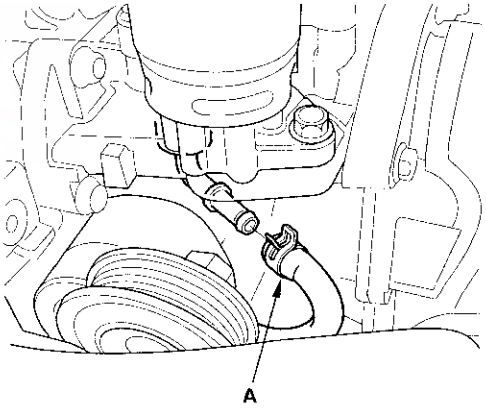

(cont'd)

Intake Manifold Removal and Installation (cont'd)

14. Disconnect the EGR valve connector (A), the intake manifold sub-harness connector (B), and the clamp (C), then remove the ground cables (D).

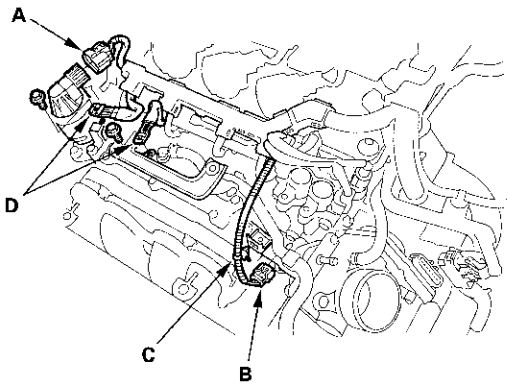

15. Disconnect the fuel injector connectors (A), rocker arm oil control valve connectors (B), and the rocker arm oil pressure sensor connector (C), then remove the engine wire harness from the brackets (D).

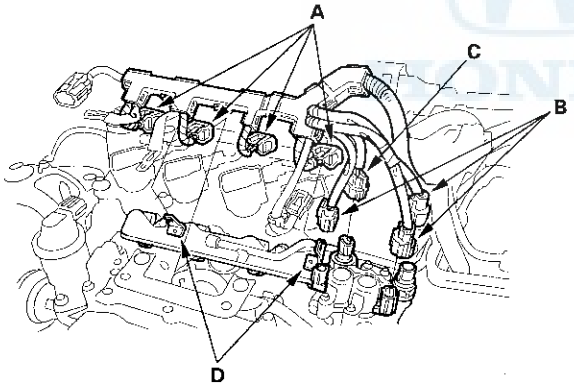

16. Disconnect the positive crankcase ventilation (PCV) hose (A).

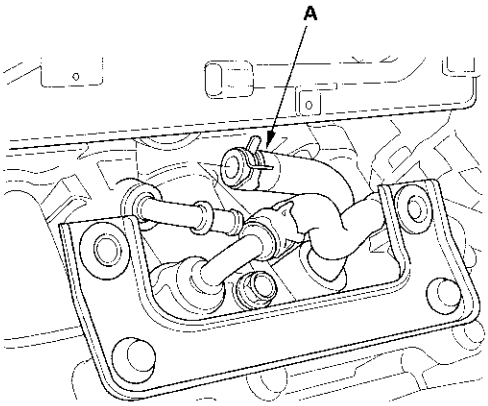

17. Remove the intake manifold assembly.

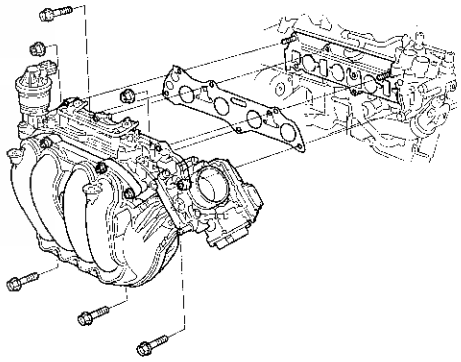

Installation

1. Install the intake manifold assembly (A) and tighten the bolts/nuts in a crisscross pattern in three steps, beginning with the inner bolt. Use a new gasket (B).

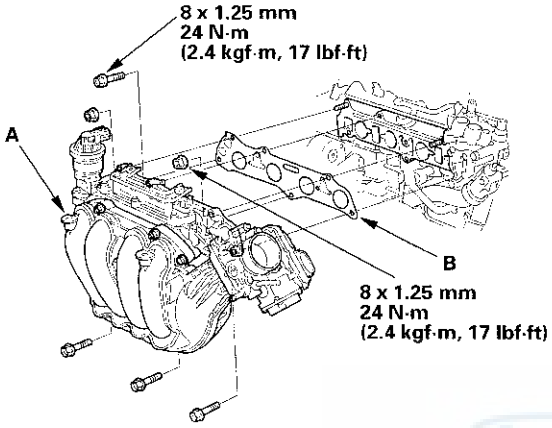

2. Connect the PCV hose (A).

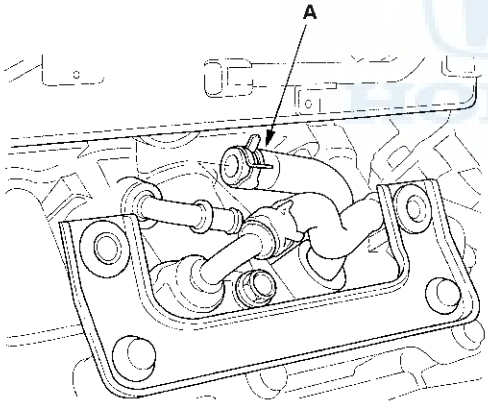

3. Install the engine wire harness to the brackets (A), then connect the fuel injector connectors (B), rocker arm oil control valve connectors (C) and rocker arm oil pressure sensor connector (D).

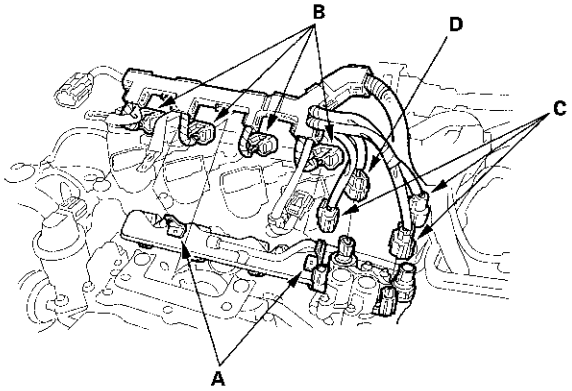

4. Connect the EGR valve connector (A), the intake manifold sub-harness connector (B), and the clamp (C), then install the ground cables (D).

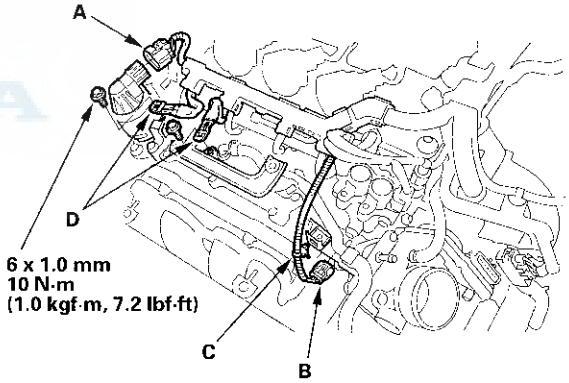

(cont'd)

Intake Manifold Removal and Installation (cont'd)

5. Connect the water bypass hose (A).

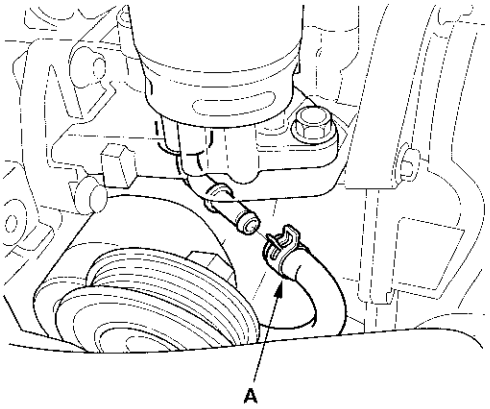

6. Connect the water bypass hose (A) and the vacuum hose (B), and the throttle actuator connector (C).

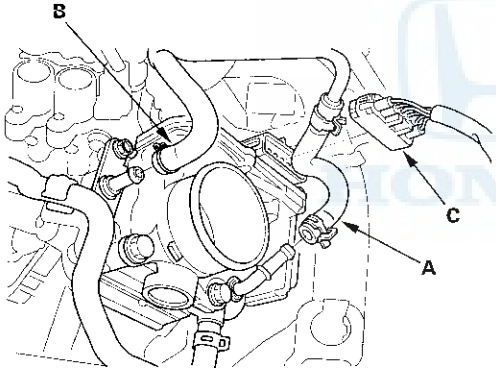

7. Raise the vehicle on the lift.

8. Install the intake manifold bracket bolts (A), then install the A/C compressor harness clamp (B).

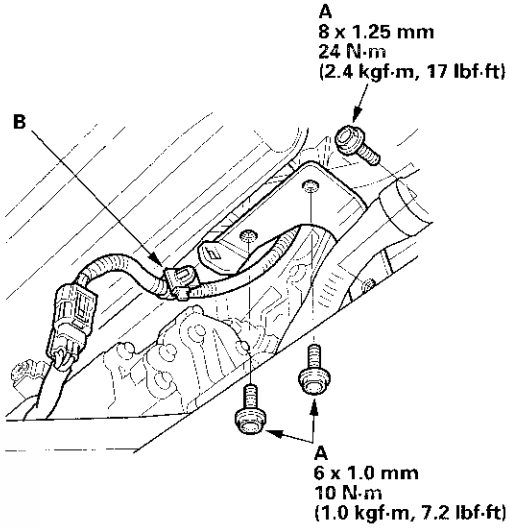

9. Install the splash shield and the front undercover (see step 27 on page 5-16).

10. Install the front wheels.

11. Lower the vehicle on the lift.

12. Install the front grille cover.

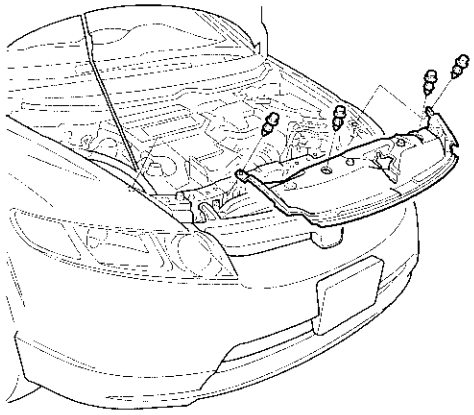

13. Install the air cleaner assembly (see page 11-370).

14. Install the intake air duct (see step 51 on page 5-20).

15. Install the resonator (see page 11-371).

16. Install the engine cover (see step 53 on page 5-21).

17. Clean up any spilled engine coolant.

18. After installation, check that all tubes, hoses, and connectors are installed correctly.

19. Refill the radiator with engine coolant, and bleed the air from the cooling system with the heater valve open (see step 9 on page 10-7).

Intake Manifold and Exhaust System

Exhaust Pipe and Muffler Replacement

NOTE: Use new gaskets and self-locking nuts when reassembling.

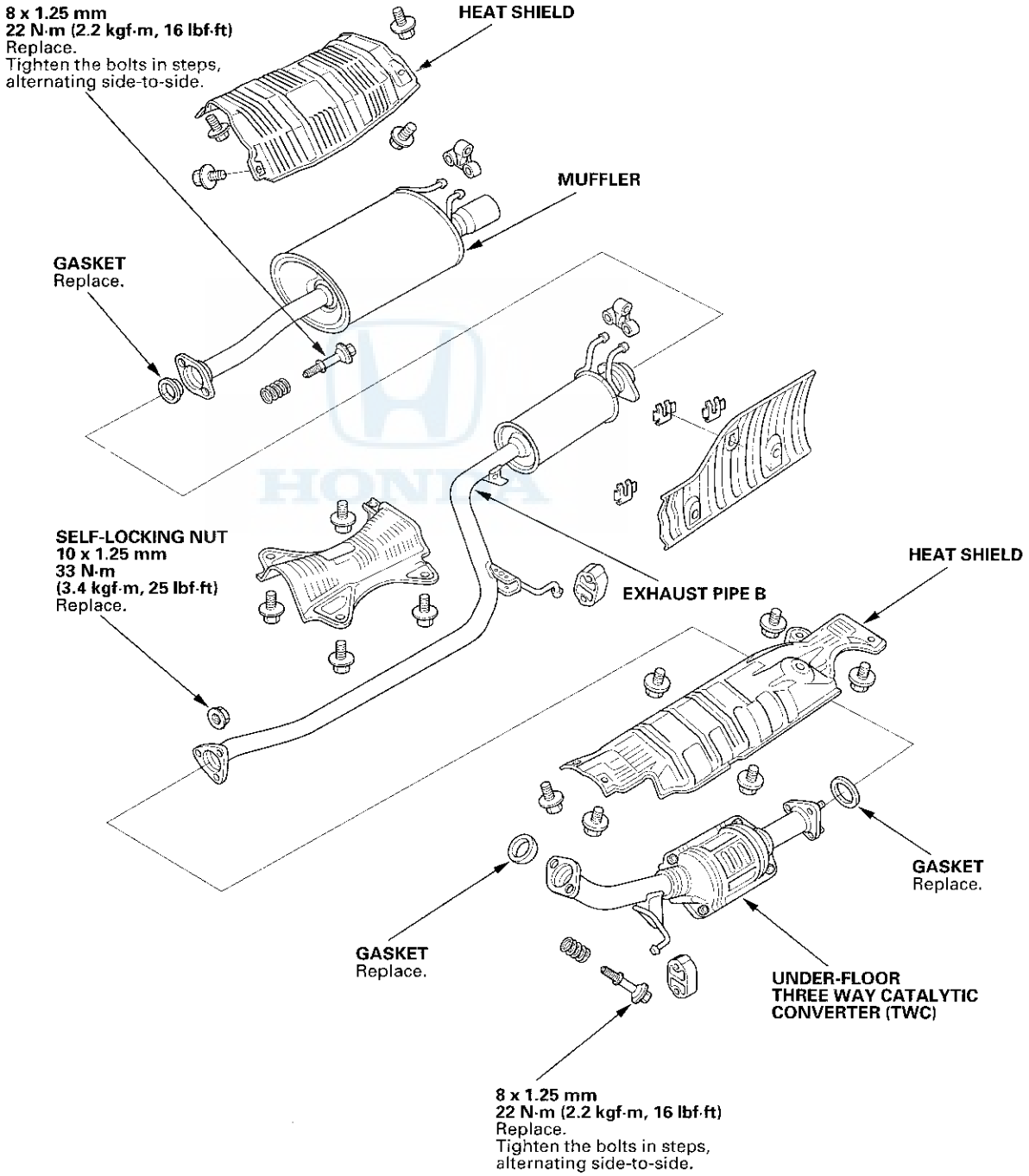

Engine Cooling

Cooling System

Component Location Index 10-2
Radiator Cap Test 10-3
Radiator Test 10-3
Fan Motor Test 10-4
Thermostat Test 10-4
Water Pump Inspection 10-5
Water Pump Replacement 10-5
Coolant Check 10-6
Coolant Replacement 10-6
Thermostat Replacement 10-8
Drive Belt Inspection 10-9
Drive Belt Replacement 10-10
Drive Belt Auto-tensioner Inspection 10-10
Drive Belt Auto-tensioner Replacement 10-11
Radiator and Fan Replacement 10-12

Fan Controls

Component Location Index 10-16
Symptom Troubleshooting Index 10-17
Circuit Diagram 10-18
Radiator Fan High Speed Circuit Troubleshooting ... 10-19

Component Location Index

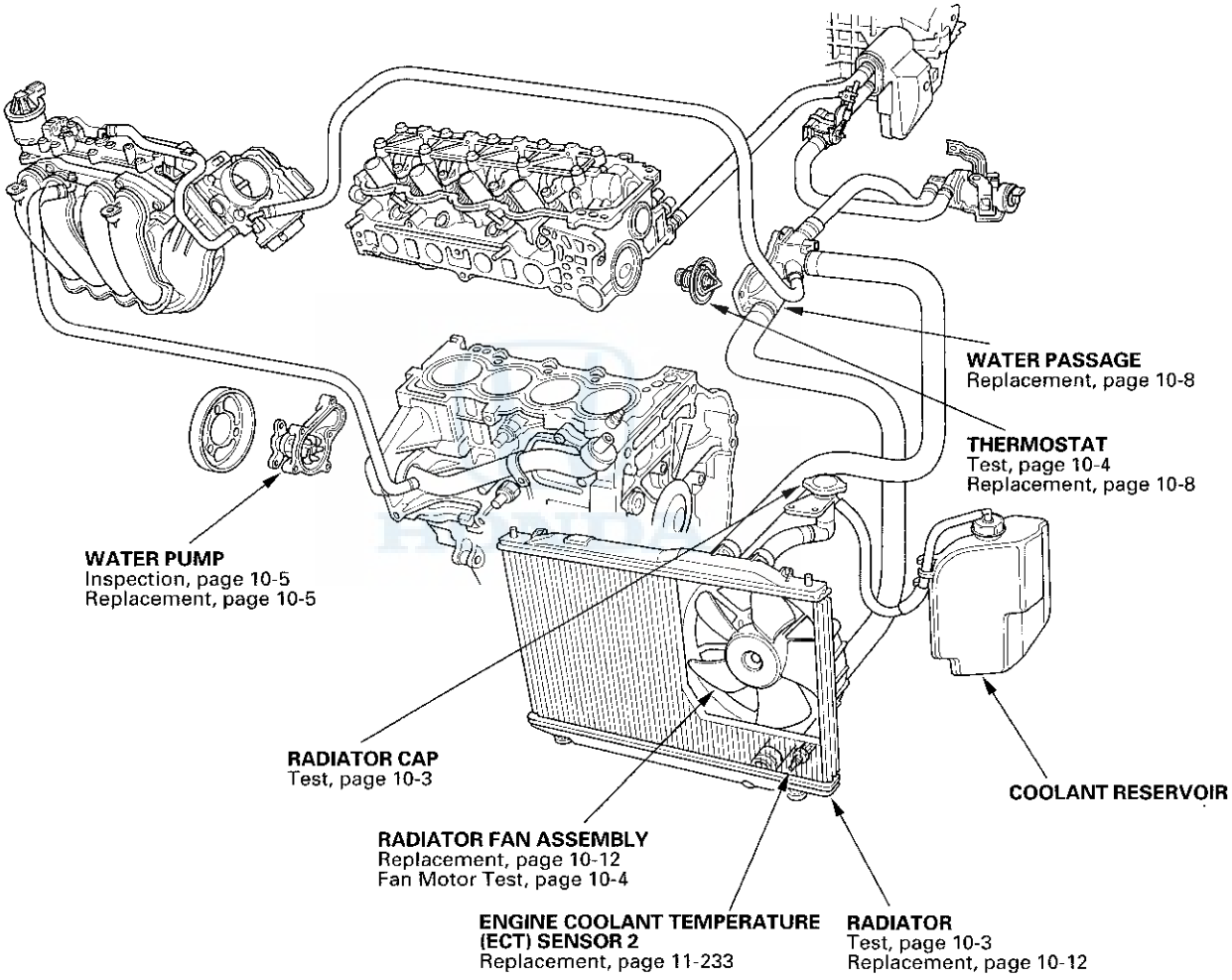

Radiator Cap Test

1. Wait until the engine is cool, then carefully remove the radiator cap (A). Wet the radiator cap seal with engine coolant, then install it on a commercially available pressure tester (B).

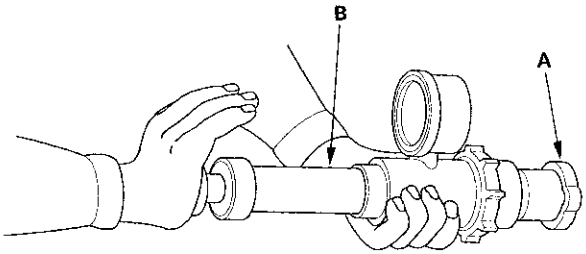

2. Apply a pressure of 93—123 kPa (0.95—1.25 kgf/cm², 14—18 psi).
3. Check for a drop in pressure.
4. If the pressure drops, replace the cap.

Radiator Test

1. Wait until the engine is cool, then carefully remove the radiator cap, and fill the radiator with engine coolant to the base of the filler neck.
2. Attach a commercially available pressure tester (A) to the radiator, and apply a pressure of 93—123 kPa (0.95—1.25 kgf/cm², 14—18 psi).

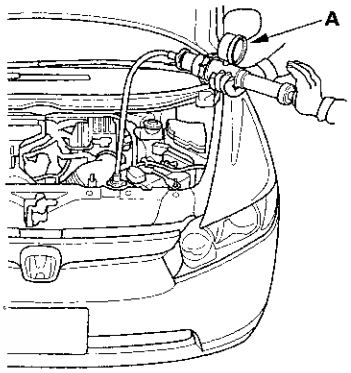

3. Inspect for engine coolant leaks and a drop in pressure.
4. Remove the tester, and check for engine oil in the coolant and/or coolant in the engine oil.
5. Reinstall the radiator cap.

Fan Motor Test

1. Disconnect the 2P connectors from the radiator and the A/C condenser fan motors.

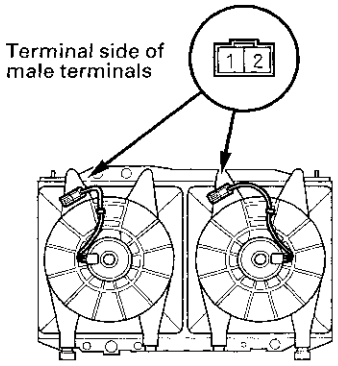

2. Test each motor by connecting battery power to terminal No. 2 and ground to terminal No. 1.

3. If a motor fails to run or does not run smoothly, replace it (see page 10-12).

Thermostat Test

Replace the thermostat if it is stuck in the open position at room temperature.

To test a closed thermostat:

1. Suspend the thermostat (A) in a container of water. Do not let the thermometer (B) touch the bottom of the hot container.

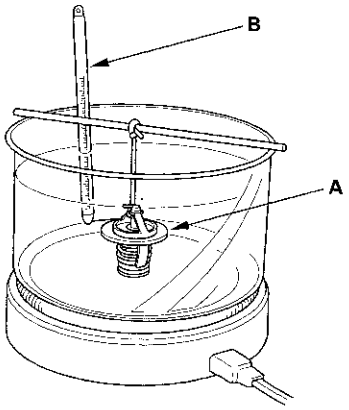

2. Heat the water, and check the temperature with a thermometer. Check the temperature at which the thermostat first opens, and at which it is fully open.

3. Measure the lift height of the thermostat when it is fully open.

Standard Thermostat

Lift Height:	**Above 8.0 mm (0.31 in.)**
Starts Opening:	**176—183 °F (80—84 °C)**
Fully Open:	**203 °F (95 °C)**

Water Pump Inspection

1. Remove the front undercover and the splash shield (see step 21 on page 5-5).

2. Remove the drive belt (see page 10-10).

3. Remove the auto-tensioner (see page 10-11).

4. Turn the water pump pulley counterclockwise. Check that it turns freely. If it does not turn smoothly, replace the water pump (see page 10-5).

   NOTE: When you check the water pump, you may see a small amount of "weeping" from the bleed holes (A). This is normal.

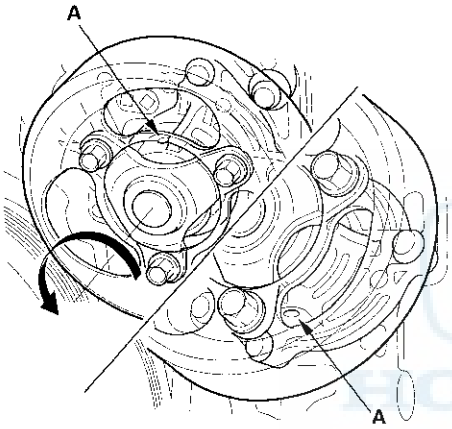

5. Install the auto-tensioner (see page 10-11).

6. Install the drive belt (see page 10-10).

7. Install the splash shield and the front undercover (see step 27 on page 5-16).

Water Pump Replacement

1. Drain the engine coolant (see page 10-6).

2. Remove the front undercover and the splash shield (see step 21 on page 5-5).

3. Remove the drive belt (see page 10-10).

4. Remove the water pump pulley mounting bolts.

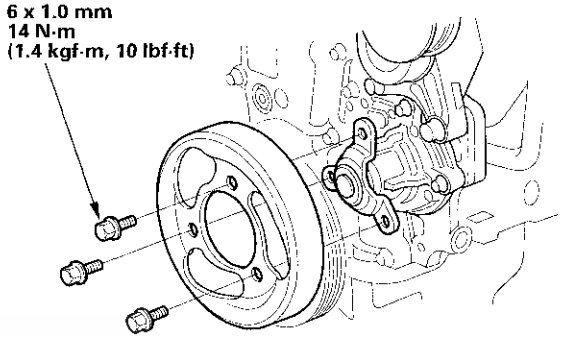

5. Remove the auto-tensioner (see page 10-11).

6. Remove the five bolts securing the water pump, then remove the water pump (A) with water pump pulley.

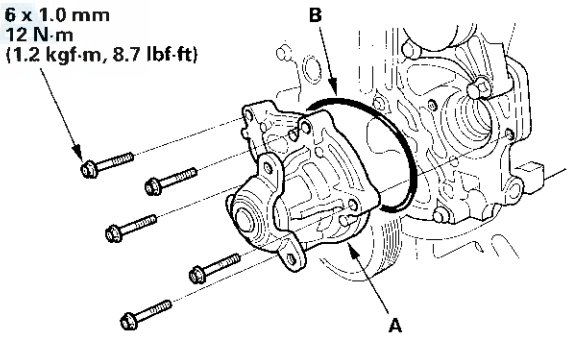

7. Inspect and clean the O-ring groove and the mating surface with the engine block.

8. Install the water pump with a new O-ring (B) in the reverse order of removal.

9. Clean up any spilled engine coolant.

10. Refill the radiator with engine coolant, then bleed the air from the cooling system with the heater valve open (see step 9 on page 10-7).

11. Install the splash shield and the front undercover (see step 27 on page 5-16).

Coolant Check

1. Look at the coolant level in the coolant reservoir. Make sure it is between the MAX mark (A) and the MIN mark (B).

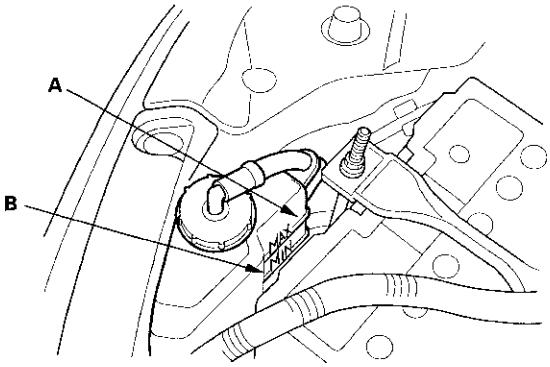

2. If the coolant level in the coolant reservoir is at or below the MIN mark, add coolant to bring it between the MIN mark and the MAX mark, then inspect the cooling system for leaks.

Coolant Replacement

1. Wait until the engine is cool, then carefully remove the radiator cap.

2. Start the engine. Set the heater temperature control dial to maximum heat, then turn the ignition switch to LOCK (0). Make sure the engine and radiator are cool to the touch.

3. Remove the five clips and the two bolts securing the front undercover, then open the front undercover (see step 2 on page 8-10).

4. Loosen the drain plug (A), and drain the coolant.

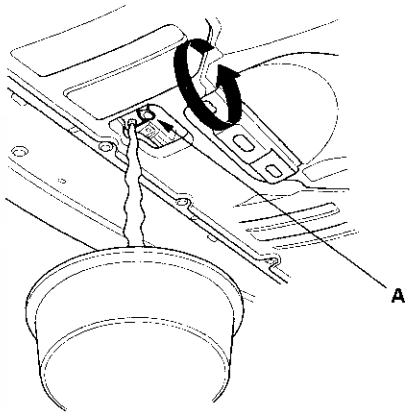

5. Remove the drain bolt (A) from the rear side of the engine block.

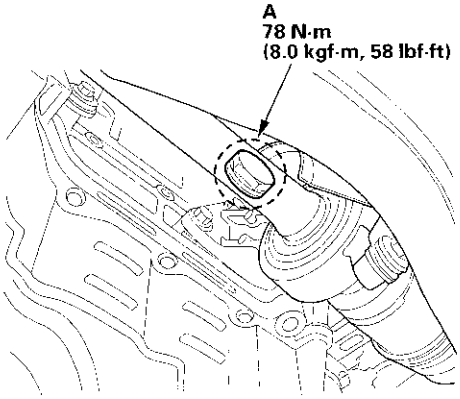

6. After the coolant has drained, reinstall the drain bolt with a new washer.

7. Tighten the radiator drain plug securely.

8. Remove, drain, and reinstall the coolant reservoir.

9. Loosen the air bleed bolt (A) on the connecting pipe joint.

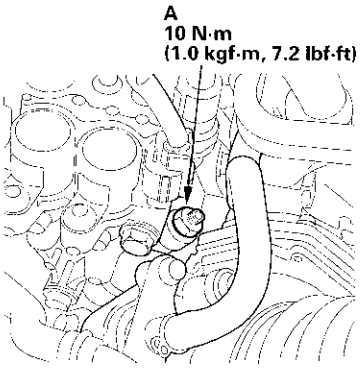

10. Pour Honda Long Life Antifreeze/Coolant Type 2 (P/N OL999-9001) into the radiator and the coolant reservoir, and tighten the bleed bolt as soon as coolant starts to run out in a steady stream.

11. Pour Honda Long Life Antifreeze/Coolant Type 2 into the radiator up to the base of the filler neck.

    NOTE:
    - Always use Honda Long Life Antifreeze/Coolant Type 2. Using a non-Honda coolant can result in corrosion, causing the cooling system to malfunction or fail.
    - Honda Long Life Antifreeze/Coolant Type 2 is a mixture of 50 % antifreeze and 50 % water. Do not add water.

    Engine Coolant Capacities (Including the coolant reservoir capacity of 0.4 L (0.11 US gal))
    At Coolant Change: 4.75 L (1.25 US gal)
    After Engine Overhaul: 6.0 L (1.59 US gal)

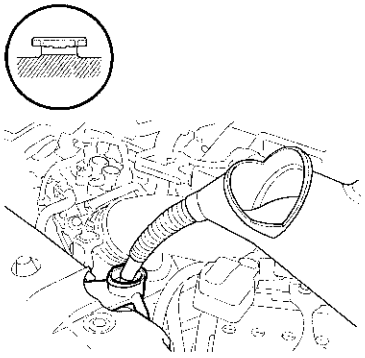

12. Loosely install the radiator cap.

13. Start the engine and let it run until it warms up (the radiator fan comes on at least twice).

14. Turn off the engine. Check the level in the radiator, and add Honda Long Life Antifreeze/Coolant Type 2, if needed.

15. Put the radiator cap on securely, then run the engine again, and check for leaks.

16. Clean up any spilled engine coolant.

17. If the maintenance minder required engine coolant replacement, reset the maintenance minder (see page 3-4), and this procedure is complete. If the maintenance minder did not require engine coolant replacement, go to step 18.

18. Turn the ignition switch to LOCK (0).

19. Connect the Honda Diagnostic System (HDS) to the data link connector (DLC) (see step 2 on page 11-3).

20. Turn the ignition switch to ON (II).

21. Make sure the HDS communicates with the vehicle and the powertrain control module (PCM). If it does not communicate, troubleshoot the DLC circuit (see page 11-213).

22. Select GAUGES in the BODY ELECTRICAL with the HDS.

23. Select ADJUSTMENT in the GAUGES with the HDS.

24. Select SERVICE REMINDER in the ADJUSTMENT with the HDS.

25. Select RESET in the SERVICE REMINDER with the HDS.

26. Select MAINTENANCE SUB ITEM 5 RESET with the HDS.

Thermostat Replacement

Removal

1. Drain the engine coolant (see page 10-6).

2. Remove the air cleaner assembly (see page 11-370).

3. Disconnect the upper radiator hose (A), the lower radiator hose (B), the heater hoses (C), and the water bypass hose (D).

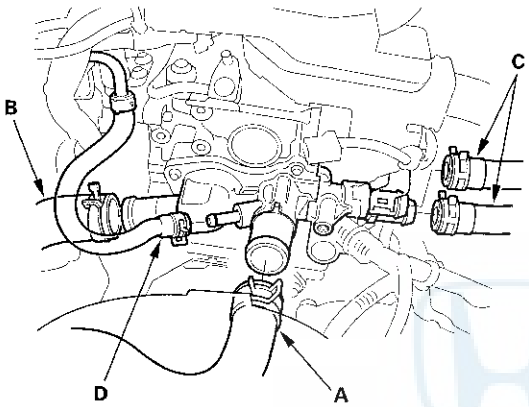

4. Remove the water passage (A), then remove the thermostat (B).

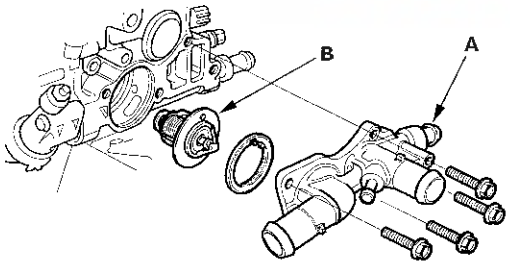

Installation

1. Remove all of the old liquid gasket from the water passage, thermostat housing mating surfaces, the bolts, and the bolt holes.

2. Apply a 1.5 mm wide bead of the liquid gasket on the water passage, P/N 08717-0004, 08718-0001, 08718-0003, or 08718-0009, along the broken lines (A). Install the component within 5 minutes of applying the liquid gasket.

   NOTE:
   - If you apply liquid gasket P/N 08718-0012, the component must be installed with 4 minutes.
   - If too much time has passed after applying the liquid gasket, remove the old liquid gasket and residue, then reapply new liquid gasket.

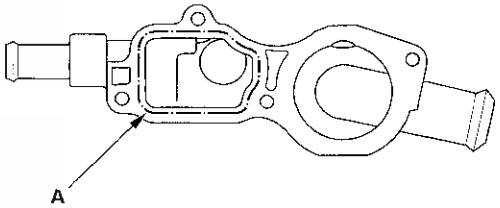

3. Install the rubber seal (A) on the thermostat (B), then install the thermostat with the pin (C) up.

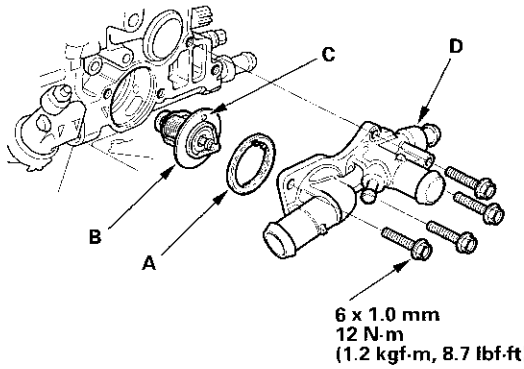

4. Install the water passage (D).

   NOTE: After assembly, wait at least 30 minutes before filling the engine with coolant.

5. Connect the upper radiator hose (A), the lower radiator hose (B), the heater hoses (C), and the water bypass hose (D).

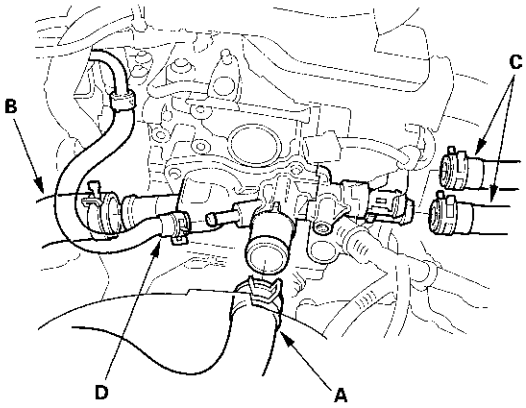

6. Install the air cleaner assembly (see page 11-370).

7. Refill the radiator with engine coolant, and bleed the air from the cooling system with the heater valve open (see step 9 on page 10-7).

Drive Belt Inspection

1. Inspect the belt for cracks or damage. If the belt is cracked or damaged, replace it.

2. Check that the auto-tensioner indicator (A) is within the standard range (B) as shown. If it is out of the standard range, replace the drive belt (see page 10-10).

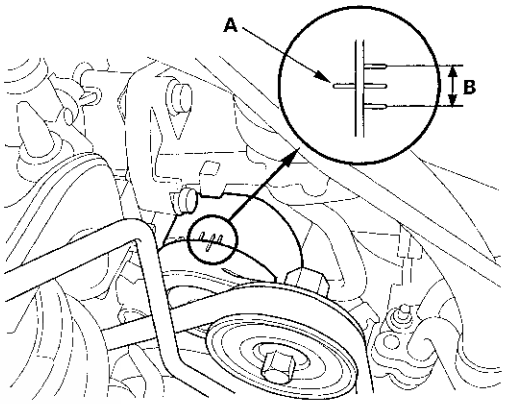

Drive Belt Replacement

1. Move the auto-tensioner (A) to relieve tension from the drive belt (B), and remove the drive belt.

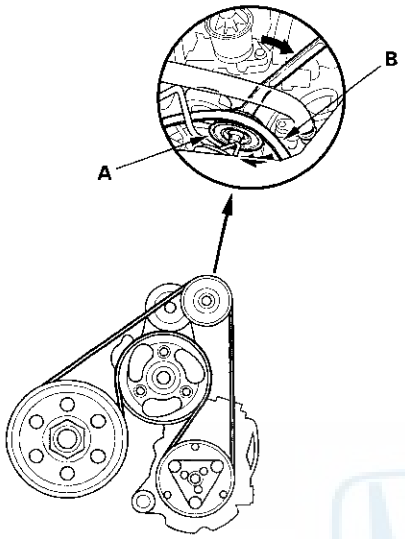

2. Install the new belt in the reverse order of removal.

Drive Belt Auto-tensioner Inspection

1. Check whether there is a change in the position of the auto-tensioner indicator before starting the engine and after starting the engine. If there is a change in the position, replace the auto-tensioner.

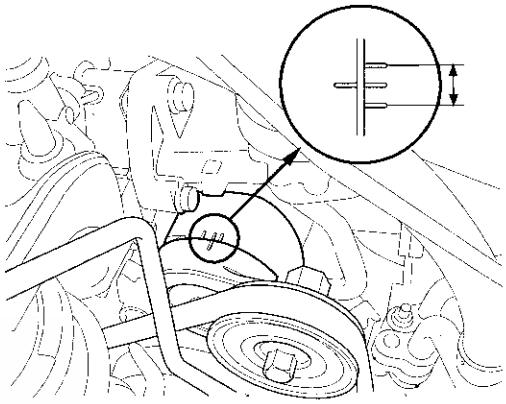

2. Check for abnormal noise from the tensioner pulley. If you hear abnormal noise, replace the tensioner pulley.

3. Remove the drive belt (see page 10-10).

4. Move the auto-tensioner within its limit with the wrench in the direction shown. Check that the tensioner moves smoothly and without any abnormal noise. If the tensioner does not move smoothly or you hear abnormal noise, replace the auto-tensioner.

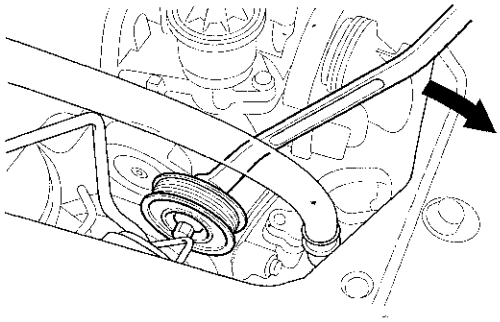

5. Remove the auto-tensioner (see page 10-11).

6. Install the tensioner pulley.

7. Clamp the auto-tensioner (A) by using two 8 mm bolts (B) and a vise (C) as shown. Do not clamp the auto-tensioner itself.

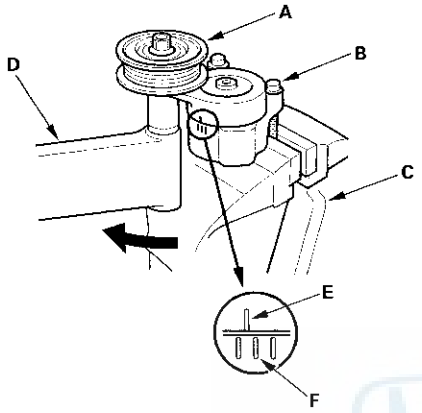

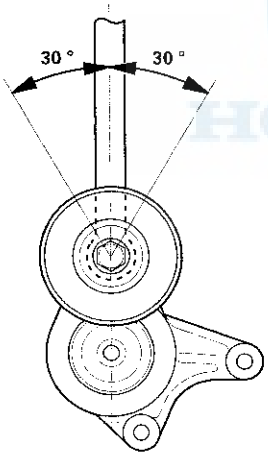

8. Set the torque wrench (D) on the pulley bolt.

9. Align the indicator (E) on the tensioner arm with the center mark (F) on the tensioner base by using the torque wrench, and measure the torque. If the torque value is out of specification, replace the auto-tensioner.

   NOTE: If the indicator exceeds the center mark, recheck the torque.

   Auto-Tensioner Spring Torque:
   10—13 N·m (1.0—1.3 kg·m, 7.3—9.4 lbf·ft)

Drive Belt Auto-tensioner Replacement

1. Remove the drive belt (see page 10-10).

2. Remove the water pump pulley bolts.

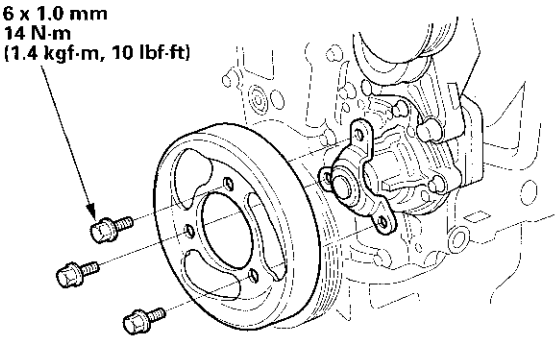

3. Remove the auto-tensioner pulley.

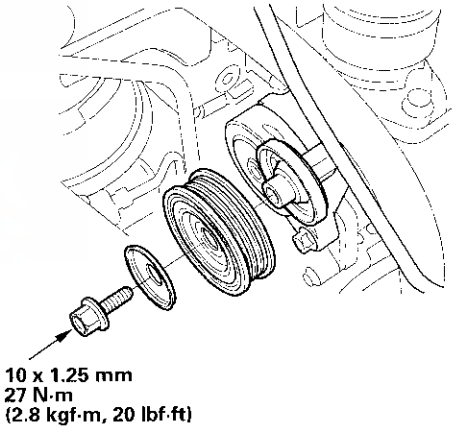

(cont'd)

Drive Belt Auto-tensioner Replacement (cont'd)

4. Remove the drive belt auto-tensioner.

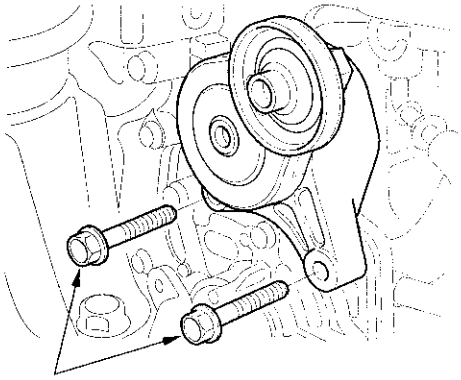

5. Install the drive belt auto-tensioner in the reverse order of removal.

Radiator and Fan Replacement

1. Drain the engine coolant (see page 10-6).
2. Remove the front wheels.
3. Remove the front undercover and the splash shield (see step 21 on page 5-5).
4. Remove the engine cover (see step 6 on page 5-3).
5. Remove the resonator (see page 11-371).
6. Remove the intake air duct (see step 8 on page 5-3).
7. Remove the air cleaner assembly (see page 11-370).
8. Remove the front grille cover.

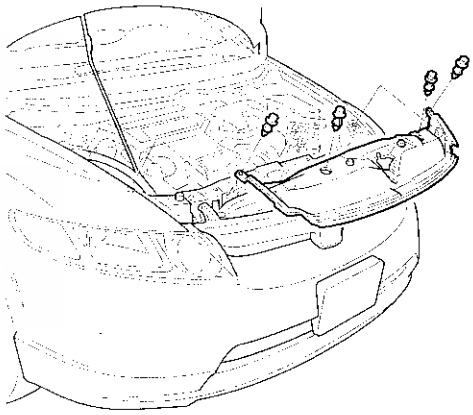

9. Remove the clips (A) and the radiator mount upper bracket/cushion (B).

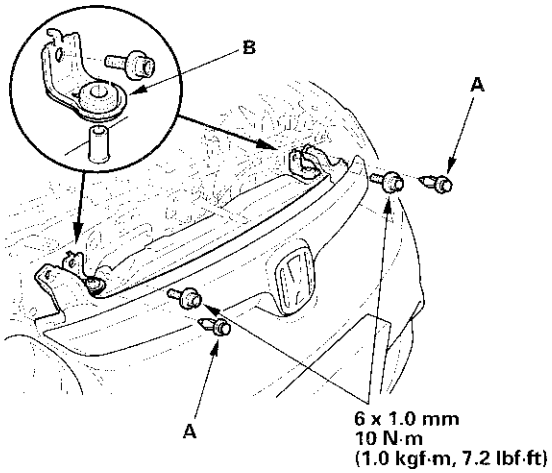

10. Disconnect the hood latch switch connector (A), then remove the mounting bolts (B) and the clamps (C).

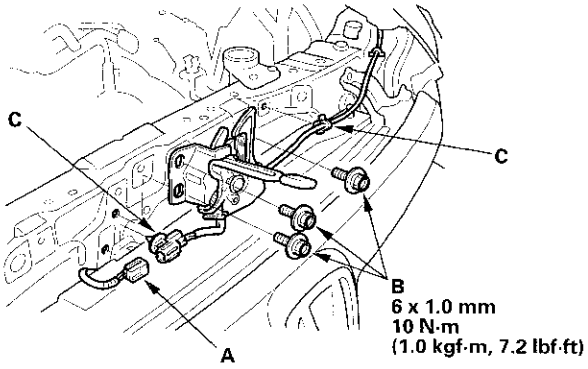

11. Disconnect the reservoir hose (A) and remove the mounting bolts (B), then remove the water filler (C).

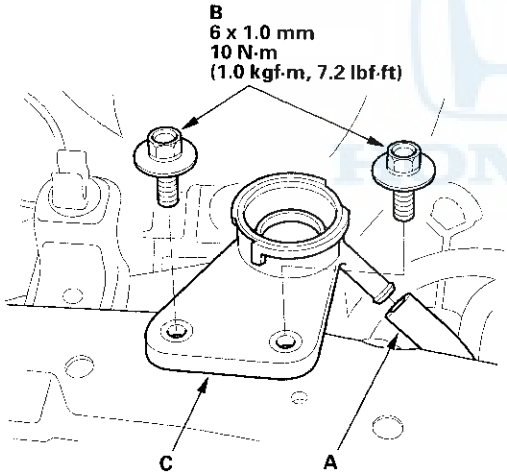

12. Remove the harness clamps (A), then disconnect the radiator fan motor connector (B), A/C condenser fan motor connector (C), and the harness clamps (D).

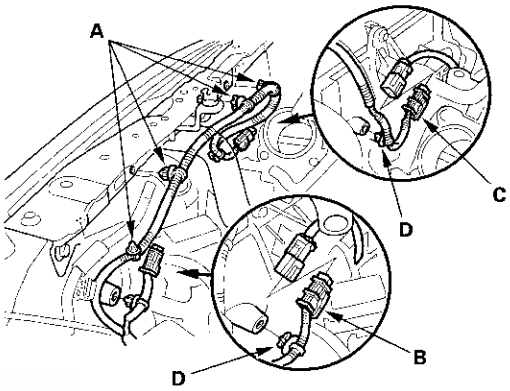

13. Remove the bulkhead.

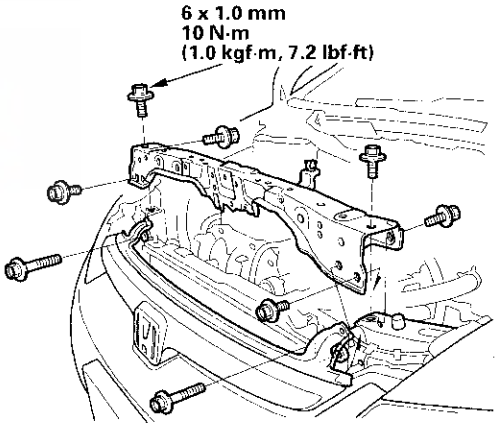

(cont'd)

Radiator and Fan Replacement (cont'd)

14. Disconnect the upper radiator hose (A) and the lower radiator hose (B), then remove the water lower pipe mounting bolts (C).

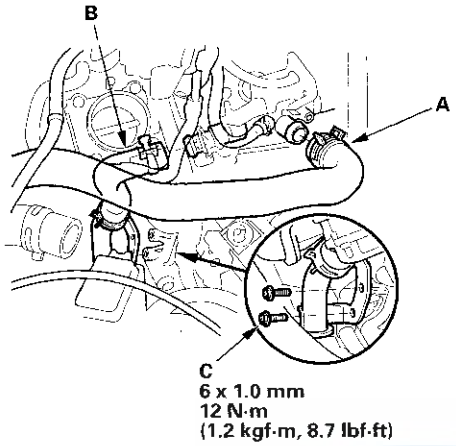

15. Raise the vehicle on the lift.

16. Drain the CVT fluid (CVTF) (see page 14-176).

17. Disconnect the ATF cooler hoses (A) and the lower radiator hose (B).

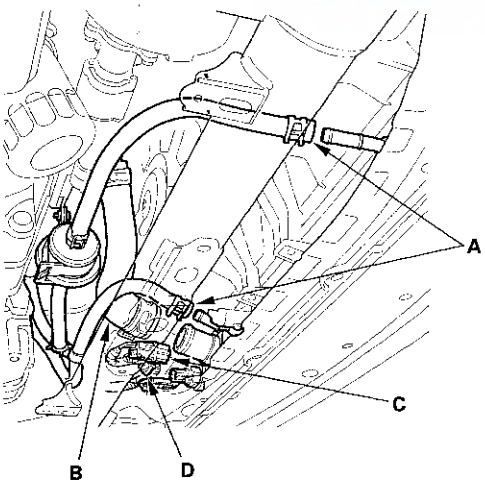

18. Disconnect the engine coolant temperature (ECT) sensor 2 connector (C), then remove the clamp (D).

19. Lower the vehicle on the lift.

20. Disconnect the upper radiator hose (A) and the water filler hose (B).

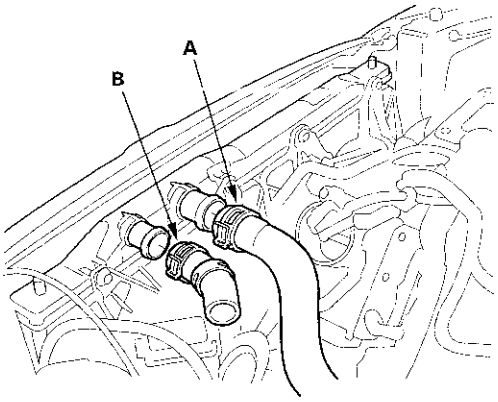

21. Remove the mounting bolts (A), then pull up the radiator fan shroud assembly (B) and the A/C condenser fan shroud assembly (C).

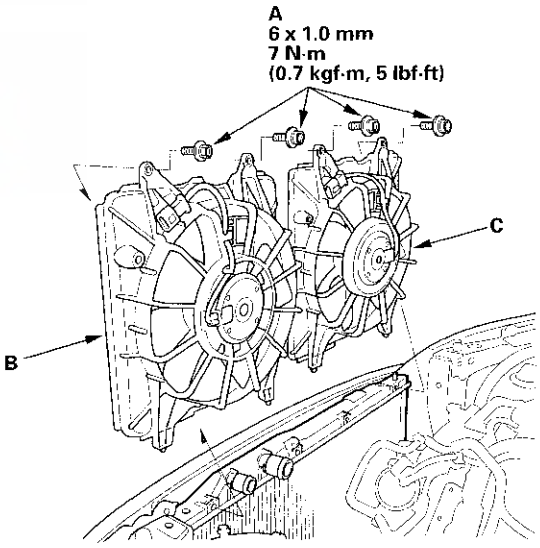

22. Pull up the radiator (A), then remove the ECT sensor 2 (B), the drain plug (C), the O-rings (D), and the lower cushions (E).

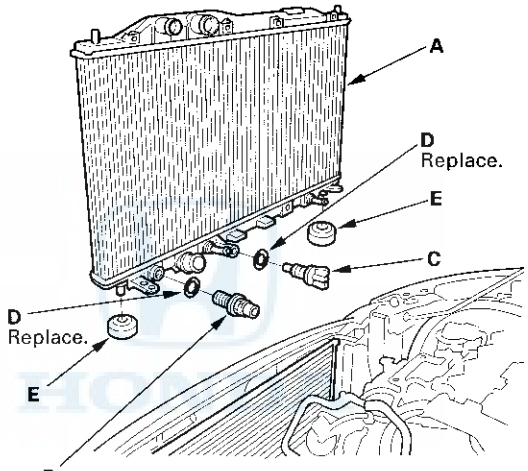

10 x 1.25 mm
12 N·m
(1.2 kgf·m, 8.7 lbf·ft)

23. Install the radiator in the reverse order of removal. Make sure the upper and lower cushions are set securely.

24. Install the bulkhead in the reverse order of removal. Apply touch-up paint to the bulkhead mounting bolts.

25. Adjust the hood latch alignment (see page 20-129).

26. Refill the radiator with engine coolant, and bleed the air from the cooling system with the heater valve open (see step 9 on page 10-7).

Component Location Index

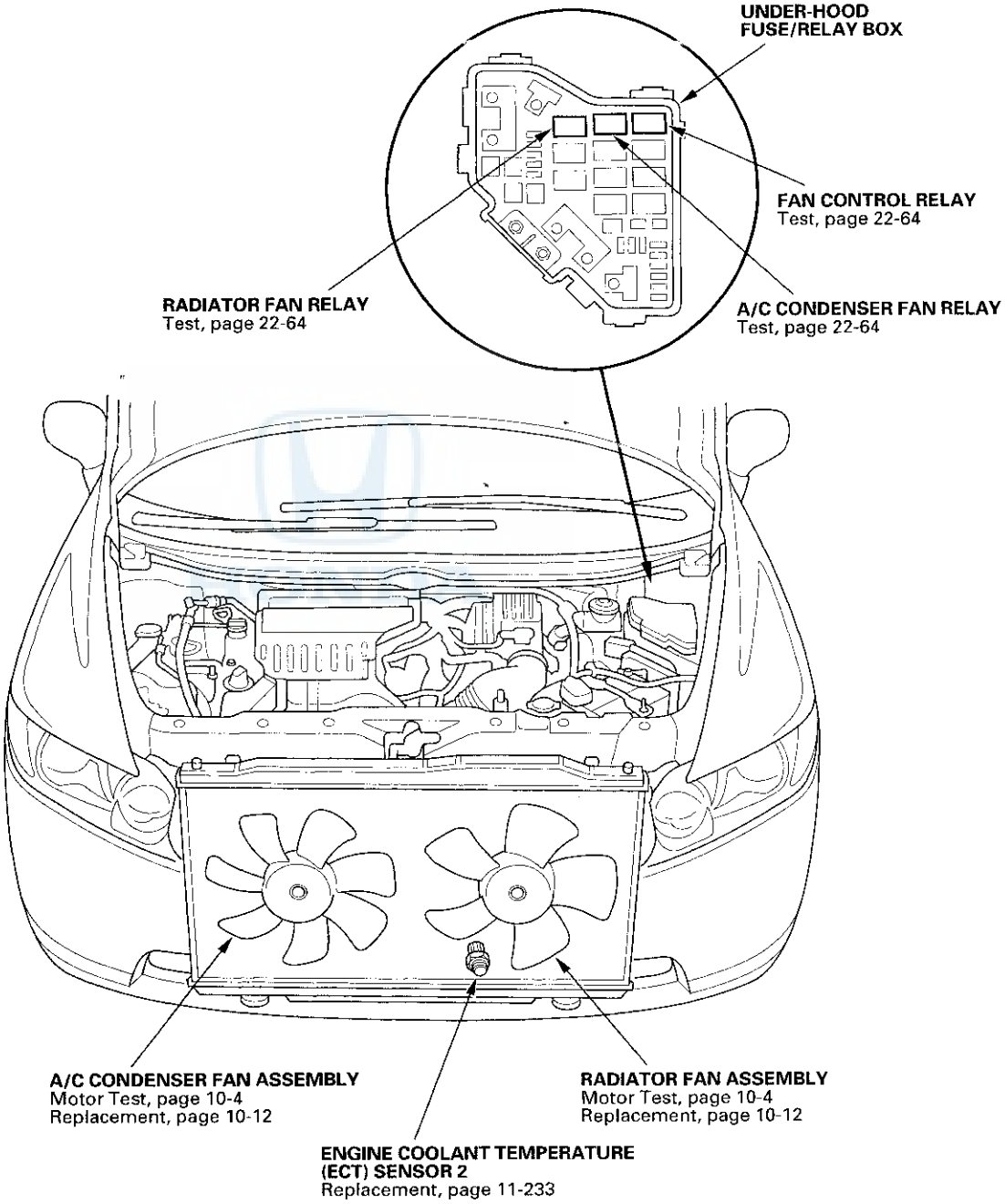

Symptom Troubleshooting Index

Symptom	Diagnostic Procedure	Also check for
Engine overheats	1. Check the coolant level. 2. Check for any engine coolant leakage (from gaskets, hoses, O-rings, etc.). 3. Check for dirt, leaves, or insects on the radiator and the A/C condenser. 4. Check for deteriorated coolant. 5. Check for damaged or deformed fan shroud. 6. Inspect the fan motors (see page 10-4) or fan relays (see page 22-64). 7. Check the radiator cap (see page 10-3). 8. Check the thermostat (see page 10-4). 9. Inspect the water pump (see page 10-5). 10. Check for plugged or deteriorated radiator hose. 11. Check for plugged heater core or hoses. 12. Check for damaged cylinder head gasket.	
The radiator fan does not run at high speed	Radiator fan high speed circuit troubleshooting (see page 10-19).	Cleanliness and tightness of all connectors
Both the radiator fan and the A/C condenser fan do not run at low speed	Radiator and A/C condenser fan low speed circuit troubleshooting (see page 21-78).	Cleanliness and tightness of all connectors
The A/C condenser fan does not run at high speed	A/C condenser fans high speed circuit troubleshooting (see page 21-82).	Cleanliness and tightness of all connectors

HONDA

Fan Controls

Circuit Diagram

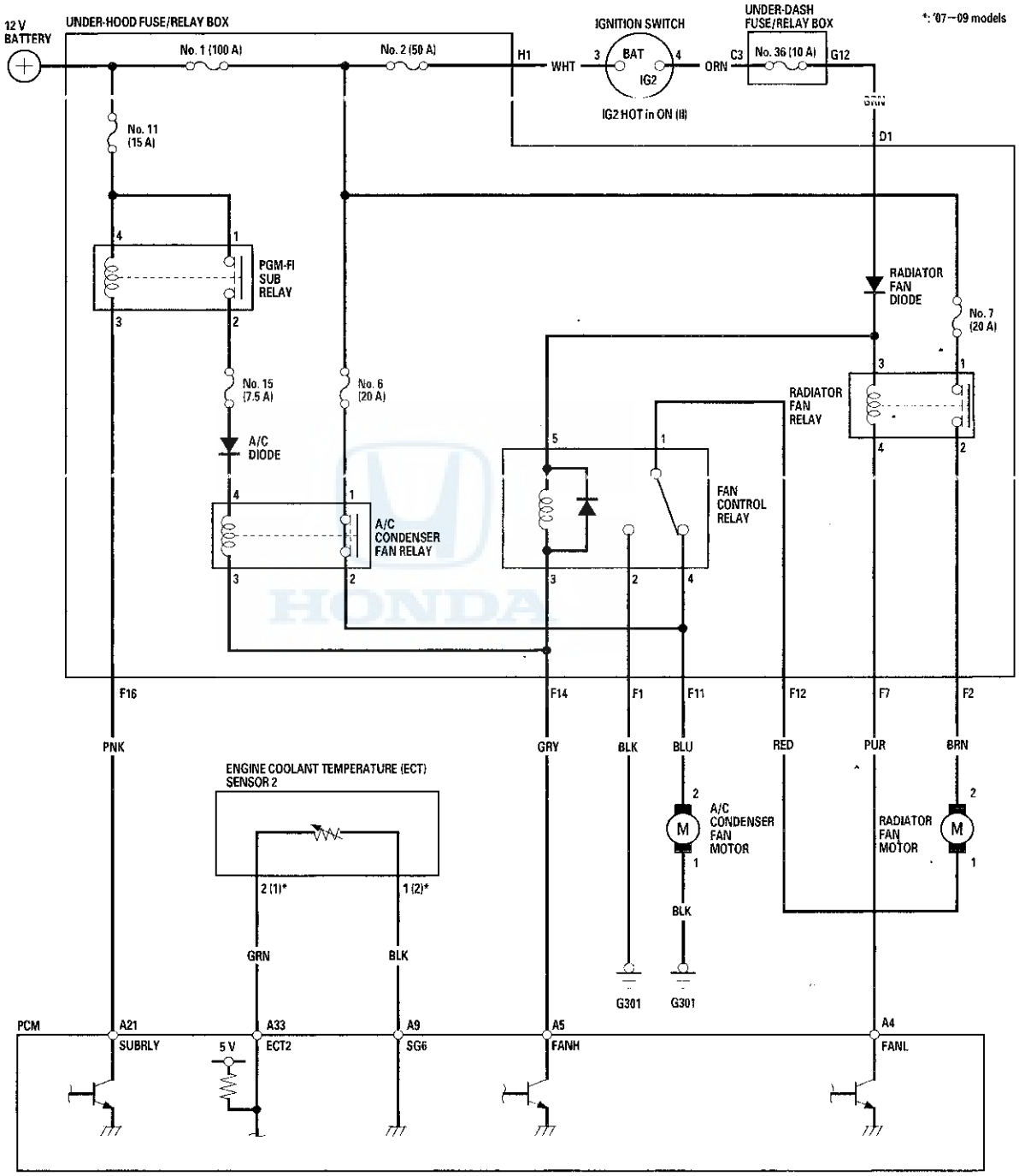

Radiator Fan High Speed Circuit Troubleshooting

1. Check the No. 7 (20 A) fuse in the under-hood fuse/relay box and the No. 36 (10 A) fuse in the under-dash fuse/relay box.

   Are the fuse(s) OK?

   YES—Go to step 2.

   NO—Replace the fuse. If the fuse continues to blow, locate and repair the short in the circuit between the under-hood fuse/relay box and the A/C condenser fan motor, and the under-dash fuse/relay box and the under-hood fuse/relay box. ■

2. Remove the radiator fan relay and the fan control relay from the under-hood fuse/relay box, and test it (see page 22-64).

   Are the relays OK?

   YES—Go to step 3.

   NO—Replace the radiator fan relay and/or fan control relay. ■

3. Measure the voltage between radiator fan relay 4P socket terminal No. 1 and body ground.

   RADIATOR FAN RELAY 4P SOCKET

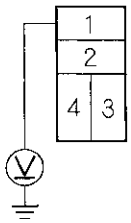

   Terminal side of female terminals

   Is there battery voltage?

   YES—Go to step 4.

   NO—Replace the under-hood fuse/relay box. ■

4. Connect fan control relay 5P socket terminals No. 1 and No. 2 with a jumper wire.

   FAN CONTROL RELAY 5P SOCKET

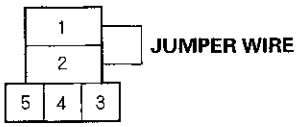

   Terminal side of female terminals

5. Connect radiator fan relay 4P socket terminals No. 1 and No. 2 with a jumper wire.

   RADIATOR FAN RELAY 4P SOCKET

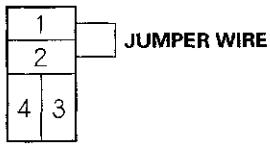

   Terminal side of female terminals

   Does the radiator fan run at high speed?

   YES—Go to step 10.

   NO—Go to step 6.

(cont'd)

Radiator Fan High Speed Circuit Troubleshooting (cont'd)

6. Remove the jumper wires, then check for continuity between fan control relay 5P socket terminal No. 2 and body ground.

FAN CONTROL RELAY 5P SOCKET

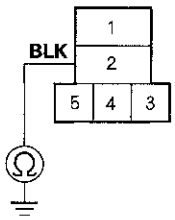

Terminal side of female terminals

Is there continuity?

YES—Go to step 7.

NO—Repair open in the wire between fan control relay 5P socket terminal No. 2 and body ground. ■

7. Test the radiator fan motor (see page 10-4).

Is the motor OK?

YES—Go to step 8.

NO—Replace the radiator fan motor (see page 10-12). ■

8. Check for continuity between radiator fan relay 4P socket terminal No. 2 and radiator fan motor 2P connector terminal No. 2.

RADIATOR FAN RELAY 4P SOCKET
Terminal side of female terminals

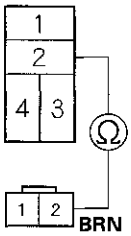

RADIATOR FAN MOTOR 2P CONNECTOR
Wire side of female terminals

Is there continuity?

YES—Go to step 9.

NO—Repair open in the wire between radiator fan relay 4P socket terminal No. 2 and radiator fan motor 2P connector terminal No. 2. ■

9. Check for continuity between fan control relay 5P socket terminal No. 1 and radiator fan motor 2P connector terminal No. 1.

FAN CONTROL RELAY 5P SOCKET
Terminal side of female terminals

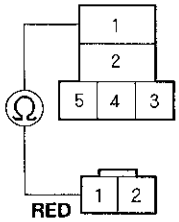

RADIATOR FAN MOTOR 2P CONNECTOR
Wire side of female terminals

Is there continuity?

YES—Check for poor connections or loose terminals at the under-hood fuse/relay box and the radiator fan motor, the under-hood fuse/relay box and body ground (G301).■

NO—Repair open in the wire between fan control relay 5P socket terminal No. 1 and radiator fan motor 2P connector terminal No. 1.■

10. Turn the ignition switch to ON (II).

11. Measure the voltage between radiator fan relay 4P socket terminal No. 3 and body ground.

RADIATOR FAN RELAY 4P SOCKET

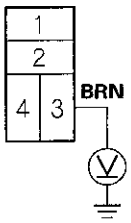

Terminal side of female terminals

Is there battery voltage?

YES—Go to step 12.

NO—Repair open in the wire between the under-dash fuse/relay box and the under-hood fuse/relay box.■

12. Measure the voltage between fan control relay 5P socket terminal No. 5 and body ground.

FAN CONTROL RELAY 5P SOCKET

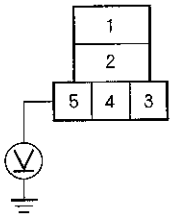

Terminal side of female terminals

Is there battery voltage?

YES—Go to step 13.

NO—Replace the under-hood fuse/relay box.■

(cont'd)

Radiator Fan High Speed Circuit Troubleshooting (cont'd)

13. Turn the ignition switch to LOCK (0).

14. Connect the Honda Diagnostic System (HDS) to the data link connector (DLC) (see step 2 on page 11-3).

15. Turn the ignition switch to ON (II).

16. Make sure the HDS communicates with the vehicle and the powertrain control module (PCM). If it does not communicate, troubleshoot the DLC circuit (see page 11-213).

17. Jump the SCS line with the HDS, then turn the ignition switch to LOCK (0).

    NOTE: This step must be done to protect the PCM from damage.

18. Disconnect PCM connector A (44P).

19. Check for continuity between radiator fan relay 4P socket terminal No. 4 and PCM connector terminal A4.

RADIATOR FAN RELAY 4P SOCKET
Terminal side of female terminals

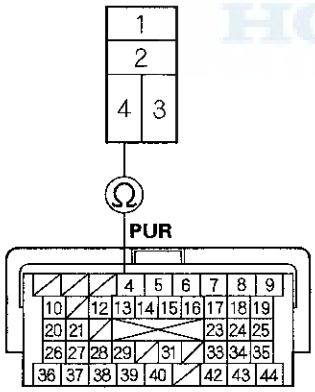

PCM CONNECTOR A (44P)
Terminal side of female terminals

Is there continuity?

YES—Go to step 20.

NO—Repair open in the wire between radiator fan relay 4P socket terminal No. 4 and PCM connector terminal A4. ■

20. Check for continuity between fan control relay 5P socket terminal No. 3 and PCM connector terminal A5.

FAN CONTROL RELAY 5P SOCKET
Terminal side of female terminals

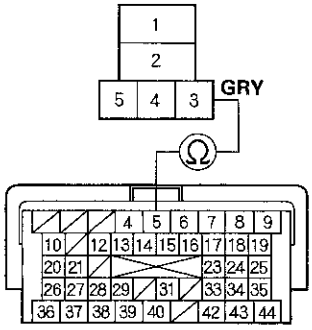

PCM CONNECTOR A (44P)
Terminal side of female terminals

Is there continuity?

YES—Update the PCM (see page 11-236) if it does not have the latest software, or substitute a known-good PCM (see page 11-7), then recheck. If the symptom goes away with a known-good PCM, replace the original PCM (see page 11-238). ■

NO—Repair open in the wire between fan control relay 5P socket terminal No. 3 and PCM connector terminal A5. ■

INTEGRATED MOTOR ASSIST (IMA) SYSTEM (If fuel and emissions maintenance is required)

IMA components are located in this area. The IMA is a high-voltage system. The high voltage cables and their covers are identified by orange coloring. The safety labels are attached to high voltage and other related parts (see page 1-7). You must be familiar with the IMA system before working around it. Make sure you have read the Service Precautions in the IMA section before performing repairs or service (see page 12-3).

Fuel and Emissions

Fuel and Emissions Systems

Special Tools 11-2
General Troubleshooting Information 11-3
DTC Troubleshooting Index 11-9
Symptom Troubleshooting Index 11-13
System Description 11-15
How to Set Readiness Codes 11-56

PGM-FI System

Component Location Index 11-59
DTC Troubleshooting 11-61
F-CAN Circuit Troubleshooting 11-196
MIL Circuit Troubleshooting 11-212
DLC Circuit Troubleshooting 11-213
Injector Replacement 11-228
A/F Sensor Replacement 11-230
Secondary HO2S Replacement 11-230
CKP Sensor Replacement 11-231
CMP Sensor Replacement 11-231
MAP Sensor Replacement 11-232
MAF Sensor/IAT Sensor Replacement 11-232
ECT Sensor 1 Replacement 11-233
ECT Sensor 2 Replacement 11-233
Knock Sensor Replacement 11-234
ELD Replacement 11-235
PCM Update 11-236
PCM Replacement 11-238

Electronic Throttle Control System

Component Location Index 11-240
DTC Troubleshooting 11-241
APP Sensor Signal Inspection 11-277
Accelerator Pedal Module Removal/Installation 11-277

3-Stage i-VTEC System

Component Location Index 11-279
DTC Troubleshooting 11-280
Rocker Arm Oil Control Valve Removal/Installation 11-317
Rocker Arm Oil Pressure Sensor Removal/Installation 11-317
Rocker Arm Oil Pressure Switch Removal/Installation 11-318

Idle Control System

Component Location Index 11-319
DTC Troubleshooting 11-320
A/C Signal Circuit Troubleshooting 11-329
Brake Pedal Position Switch Signal Circuit Troubleshooting 11-330
Idle Speed Inspection 11-332
PCM Idle Learn Procedure 11-333

Fuel Supply System

Component Location Index 11-334
DTC Troubleshooting 11-336
Fuel Pump Circuit Troubleshooting 11-341
Fuel Pressure Relieving 11-345
Fuel Pressure Test 11-350
Fuel Line Inspection 11-352
Fuel Line/Quick-Connect Fitting Precautions 11-354
Fuel Line/Quick-Connect Fitting Removal 11-355
Fuel Line/Quick-Connect Fitting Installation 11-358
Fuel Tank Unit Removal and Installation 11-361
Fuel Pressure Regulator Replacement 11-363
Fuel Filter Replacement 11-363
Fuel Pump/Fuel Gauge Sending Unit Replacement 11-364
Fuel Pulsation Damper Replacement 11-364
Fuel Tank Replacement 11-365
Fuel Gauge Sending Unit Test 11-366
Low Fuel Indicator Test 11-367

Intake Air System

Component Location Index 11-368
Throttle Body Test 11-369
Throttle Body Cleaning 11-370
Air Cleaner Removal/Installation 11-370
Air Cleaner Element Inspection/Replacement 11-371
Intake Air Resonator Removal/Installation 11-371
Throttle Body Removal/Installation 11-372
Throttle Body Disassembly/Reassembly 11-373

Catalytic Converter System

Component Location Index 11-374
DTC Troubleshooting 11-375
Warm Up Three Way Catalytic Converter Removal/Installation 11-377
Under-floor Three Way Catalytic Converter Removal/Installation 11-378

EGR System

Component Location Index 11-379
DTC Troubleshooting 11-380
EGR Valve Replacement 11-392

PCV System

Component Location Index 11-393
DTC Troubleshooting 11-394
PCV Valve Inspection 11-396
PCV Valve Replacement 11-396

EVAP System

Component Location Index 11-397
DTC Troubleshooting 11-398
EVAP Canister Replacement 11-424
FTP Sensor Replacement 11-425
EVAP Canister Vent Shut Valve Replacement 11-425
EVAP Canister Purge Valve Replacement 11-426
EVAP Canister Filter Replacement 11-426

Special Tools

Ref. No.	Tool Number	Description	Qty
①	07AAA-SNAA100	Fuel Pump Module Locknut Wrench	1
②	07AAJ-S6MA150	Fuel Pressure Gauge Attachment Set	1
③	07JAZ-001000B	Vacuum/Pressure Gauge, 0—4 in.Hg	1
④	07NAJ-P07010A	Pressure Gauge Adapter	1
⑤	07ZAJ-S5AA200	Oil Pressure Hose	1
⑥-1	07406-0020201	A/T Pressure Hose	1
⑥-2	07406-0070301	A/T Low Pressure Gauge W/Panel	1
⑥-3	07MAJ-PY4011A	A/T Pressure Hose, 2,210 mm	1
⑥-4	07MAJ-PY40120	A/T Pressure Adapter	1
⑦	07406-004000B	Fuel Pressure Gauge	1

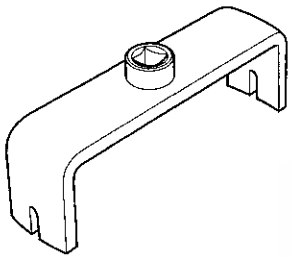

①

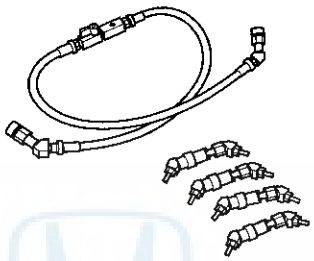

②

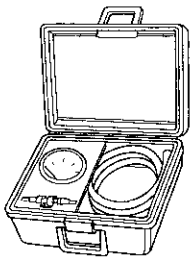

③

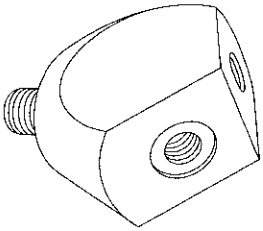

④

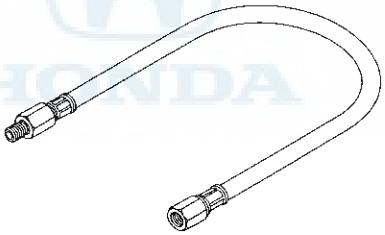

⑤

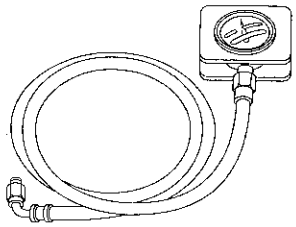

⑥-1, ⑥-2, ⑥-3, ⑥-4

⑦

General Troubleshooting Information

Intermittent Failures

The term intermittent failure means a system may have had a failure, but it checks OK now. If the malfunction indicator lamp (MIL) on the dash does not come on, check for poor connections or loose terminals at all connectors related to the circuit that you are troubleshooting. If the MIL was on but then went out, the original problem may have been intermittent.

Service Information

Periodically, new PCM software or new service procedures may become available. Always check online for the latest software or service information related to the DTCs or symptoms you are troubleshooting.

Opens and Shorts

Open and short are common electrical terms. An open is a break in a wire or at a connection. A short is an accidental connection of a wire to ground or to another wire. In simple electronics, this usually means something won't work at all. With complex electronics (such as PCMs) this can sometimes mean something works, but not the way it's supposed to.

How to Use the HDS (Honda Diagnostic System)

If the MIL (malfunction indicator lamp) has come on

1. Start the engine, and check the MIL (A).

   NOTE: If the ignition switch is turned to ON (II), and the engine is not started, the MIL stays on for 15—20 seconds (see page 11-56).

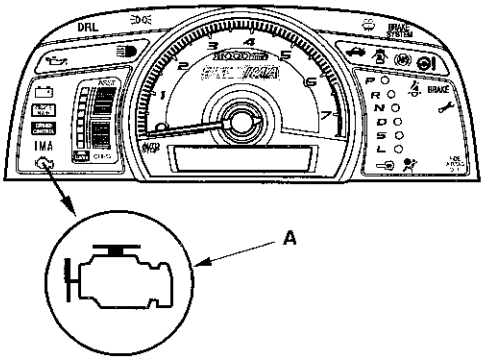

2. If the MIL stays on, connect the HDS to the data link connector (DLC) (A) located under the driver's side of the dashboard.

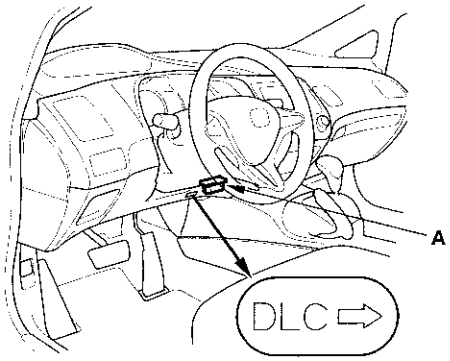

3. Turn the ignition switch to ON (II).

4. Make sure the HDS communicates with the PCM and other vehicle systems. If it doesn't go to the DLC circuit troubleshooting (see page 11-213).

5. Check the diagnostic trouble code (DTC) and note it. Also check the freeze data and/or on-board snapshot data, and download any data found. Then refer to the indicated DTC's troubleshooting, and begin the appropriate troubleshooting procedure.

   NOTE:
   - Freeze data indicates the engine conditions when the first malfunction, misfire, or fuel trim malfunction was detected.
   - The HDS can read the DTC, freeze data, on-board snapshot, current data, and other powertrain control module (PCM) data.
   - For specific operations, refer to the user's manual that came with the HDS.

6. If no DTCs are found, go to MIL troubleshooting (see page 11-212).

If the MIL did not stay on
If the MIL did not stay on but there is a driveability problem, do the symptom troubleshooting.

If you can't duplicate the DTC
Some of the troubleshooting requires you to reset the PCM and try to duplicate the DTC. If the problem is intermittent and you can't duplicate the code, do not continue through the procedure. To do so will only result in confusion and possibly, a needlessly replaced PCM.

(cont'd)

General Troubleshooting Information (cont'd)

HDS Clear Command

The PCM stores various specific data to correct the system even if there is no electrical power such as when the battery negative terminal or No. 19 FI MAIN (15 A) fuse are disconnected. Stored data based on failed parts should be cleared by using the CLEAR COMMAND of the HDS, if parts are replaced.

The HDS has three kinds of clear commands to meet this purpose. They are DTC clear, PCM reset, and CKP pattern clear. DTC clear command erases all stored DTC codes, freeze data, on-board snapshot, and readiness codes. This must be done with the HDS after reproducing the DTC during troubleshooting.
The PCM reset command erases all stored DTC codes, freeze data, on-board snapshot, readiness codes, and all specific data to correct the system except CKP pattern. If the CKP pattern data in the PCM was cleared, you must do the CKP pattern learn procedure. The CKP pattern clear command erases only CKP pattern data. This command is for repair of a misfire or the CKP sensor.

Scan Tool Clear Command

If you are using a generic scan tool to clear commands, be aware that there is only one setting for clearing the PCM, and it clears all commands at the same time (CKP pattern learn, idle learn, readiness codes, freeze data, on-board snapshot, and DTCs). After you clear all commands, you then need to do these procedures, in this order: PCM idle learn procedure (see page 11-333); CKP pattern learn procedure; Test-drive to set readiness codes to complete (see page 11-56).

DTC Clear

1. Clear the DTC with the HDS while the engine is stopped.
2. Turn the ignition switch to LOCK (0).
3. Turn the ignition switch to ON (II), and wait 30 seconds.
4. Turn the ignition switch to LOCK (0), and disconnect the HDS from the DLC.

PCM Reset

1. Reset the PCM with the HDS while the engine is stopped.
2. Turn the ignition switch to LOCK (0).
3. Turn the ignition switch to ON (II), and wait 30 seconds.
4. Turn the ignition switch to LOCK (0), and disconnect the HDS from the DLC.
5. Do the PCM idle learn procedure (see page 11-333).
6. Do the start clutch pressure control calibration procedure (see page 14-172).

CKP Pattern Clear/CKP Pattern Learn

Clear/Learn Procedure (with the HDS)

1. Connect the HDS to the data link connector (DLC) (A) located under the driver's side of the dashboard.

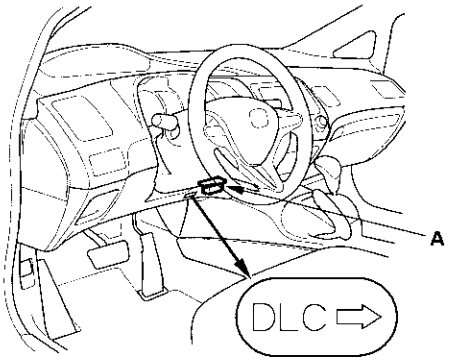

2. Turn the ignition switch to ON (II).
3. Make sure the HDS communicates with the PCM and other vehicle systems. If it doesn't, go to the DLC circuit troubleshooting (see page 11-213).
4. Select CRANK PATTERN in the ADJUSTMENT MENU with the HDS.
5. Select CRANK PATTERN LEARNING with the HDS, and follow the screen prompts.

Learn Procedure (without the HDS)

1. Start the engine. Hold the engine speed at 3,000 rpm without load (in P or N) until the radiator fan comes on.

2. Test-drive the vehicle on a level road: Decelerate (with the throttle fully closed) from an engine speed of 2,500 rpm down to 1,000 rpm with the transmission in L.

3. Test-drive the vehicle on a level road: Decelerate (with the throttle fully closed) from an engine speed of 5,000 rpm down to 3,000 rpm with the transmission in L.

4. Repeat step 2 and 3 several times.

5. Turn the ignition switch to LOCK (0).

6. Turn the ignition switch to ON (II), and wait 30 seconds.

How to End a Troubleshooting Session (required after any troubleshooting)

1. Reset the PCM with the HDS.

2. Do the PCM idle learn procedure (see page 11-333).

3. Turn the ignition switch to LOCK (0).

4. Disconnect the HDS from the DLC.

   NOTE: The PCM is part of the immobilizer system. If you replace the PCM, it will have a different immobilizer code. For the engine to start, you must rewrite the immobilizer code with the HDS.

(cont'd)

General Troubleshooting Information (cont'd)

How to Troubleshoot Circuits at the PCM Connectors

NOTE: The PCM overwrites data and monitors the EVAP system for up to 30 minutes after the ignition switch is turned to LOCK (0). Jumping the SCS line after turning the ignition switch to LOCK (0) cancels this function. Disconnecting the PCM during this function, without jumping the SCS line first, can damage the PCM.

1. Jump the SCS line with the HDS.

2. Remove the cover (A).

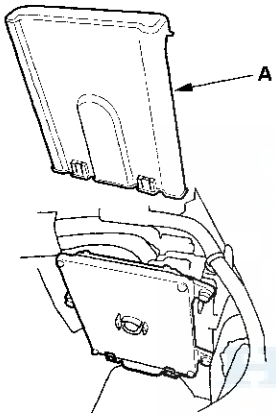

3. Lift up the under-hood fuse/relay box (D).

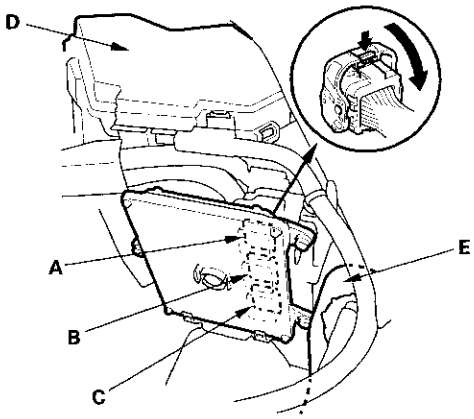

4. Remove the coolant reservoir (E). Disconnect PCM connectors A, B, and C.

   NOTE: PCM connectors A, B, and C have symbols (A=□, B=△, C=○) embossed on them for identification.

5. When diagnosis/troubleshooting is done at the PCM connector, use the terminal test port (A) above the terminal you need to check.

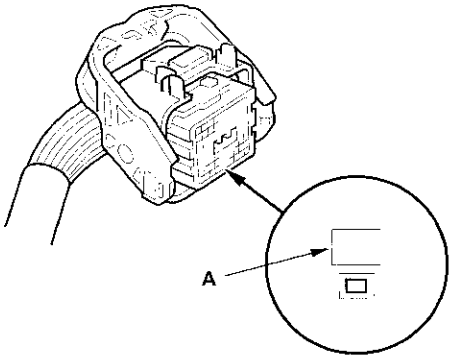

6. Connect one side of the patch cord terminals (A) to a commercially available digital multimeter (B), and connect the other side (C) to a commercially available banana jack (Pomona Electronics Tool No. 3563 or equivalent) (D).

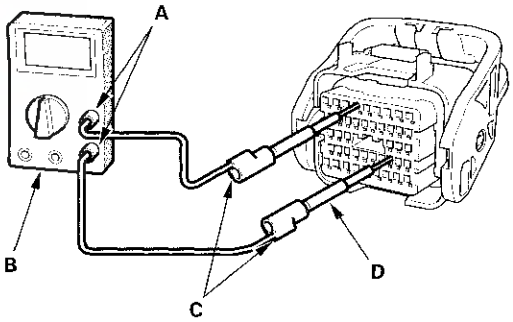

7. Gently contact the pin probe (male) at the terminal test port from the terminal side. Do not force the tips into the terminals.

NOTICE

- For accurate results, always use the pin probe (male).
- To prevent damage to the connector terminals, do not insert test equipment probes, paper clips, or other substitutes as they can damage the terminals. Damaged terminals cause a poor connection and an incorrect measurement.
- Do not puncture the insulation on a wire. Punctures can cause poor or intermittent electrical connections.

Substituting the PCM

Special Tools Required
- Honda diagnostic system (HDS) tablet tester
- Honda interface module (HIM) and an iN workstation with the latest HDS software version
- HDS pocket tester
- GNA600 and an iN workstation with the latest HDS software version

Any one of the above updating tools can be used.

NOTE: Use this procedure when you need to substitute a known-good PCM during troubleshooting procedures.

1. Connect the HDS to the data link connector (DLC) (A) located under the driver's side of the dashboard.

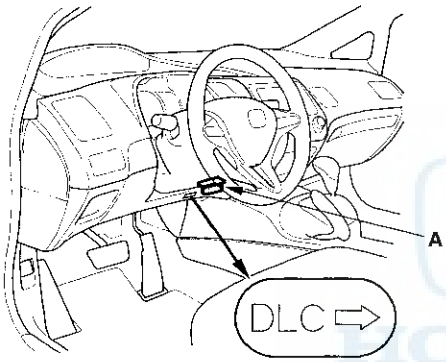

2. Turn the ignition switch to ON (II).

3. Make sure the HDS communicates with the PCM and other vehicle systems. If it doesn't, go to the DLC circuit troubleshooting (see page 11-213). If you are returning from DLC circuit troubleshooting, skip steps 5 and 6, and clean the throttle body after substituting the PCM (see page 11-370).

4. Select the INSPECTION MENU with the HDS.

5. Select the ETCS TEST, then select the TP POSITION CHECK, and follow the screen prompts.

   NOTE: If the TP POSITION CHECK indicates FAILED, continue this procedure.

6. Turn the ignition switch to LOCK (0).

7. Jump the SCS line with the HDS.

8. Do the battery removal procedure (see page 22-63).

9. Remove the cover (A).

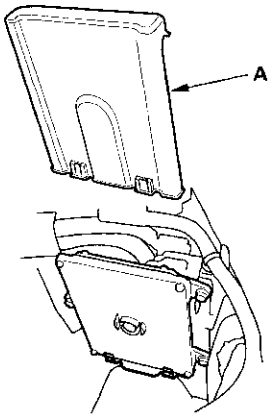

10. Remove the bolts (D), then remove the PCM (E).

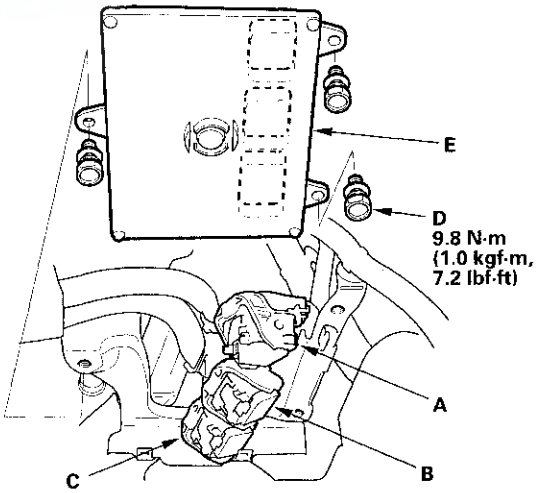

(cont'd)

General Troubleshooting Information (cont'd)

11. Disconnect PCM connectors A, B, and C.

    NOTE: PCM connectors A, B, and C have symbols (A=□, B=△, C=○) embossed on them for identification.

12. Install the parts in the reverse order of removal.

    NOTE: If the IMA battery level indicator (BAT) on the gauge indicates zero level, start the engine, and hold it between 3,500 rpm and 4,000 rpm without load (in P or N) until the IMA battery level indicator (BAT) indicates at least three segments.

13. Do the battery installation procedure (see page 22-63).

14. Turn the ignition switch to ON (II).

    NOTE: DTC P0630 VIN Not Programmed or Mismatch may be stored because the VIN has not been programmed into the PCM; ignore it, and continue this procedure.

15. Manually input the VIN to the PCM with the HDS.

16. Select the IMMOBI SYSTEM with the HDS.

17. Enter the immobilizer code that you got from the iN, and use the PCM replacement procedure in the HDS; it allows you to start the engine.

18. Update the PCM if it does not have the latest software.

19. Reset the PCM with the HDS.

20. If the TP POSITION CHECK failed in step 5, clean the throttle body (see page 11-370).

21. Do the PCM idle learn procedure (see page 11-333).

22. Do the CKP pattern learn procedure.

23. Enter the anti-theft codes for the audio system or the navigation system (if equipped), then enter the audio presets. Set the clock (on vehicle without navigation).

OBD Status

The OBD status shows the current system status of each DTC and all of the parameters. This function is used to see if the repair was successfully completed. The results of diagnostic tests for the DTC are displayed as:

- PASSED: The on board diagnosis is successfully finished.
- FAILED: The on board diagnosis has finished but failed.
- EXECUTING: The vehicle is in enable criteria conditions for the DTC and the on board diagnosis is running.
- NOT COMPLETED: The on board diagnosis was running but is out of the enable conditions of the DTC.
- OUT OF CONDITION: The vehicle has stayed out of the enable conditions for the DTC.

DTC Troubleshooting Index

DTC (MIL indication*)	Two Drive Cycle Detection	Detection Item	MIL	Note
P0101 (50)	○	Mass Air Flow (MAF) Sensor Circuit Range/Performance Problem	ON	(see page 11-61)
P0102 (50)	—	Mass Air Flow (MAF) Sensor Circuit Low Voltage	ON	(see page 11-62)
P0103 (50)	—	Mass Air Flow (MAF) Sensor Circuit High Voltage	ON	(see page 11-65)
P0106 (5)	○	Manifold Absolute Pressure (MAP) Sensor Circuit Range/ Performance Problem	ON	(see page 11-67)
P0107 (3)	—	Manifold Absolute Pressure (MAP) Sensor Circuit Low Voltage	ON	(see page 11-68)
P0108 (3)	—	Manifold Absolute Pressure (MAP) Sensor Circuit High Voltage	ON	(see page 11-70)
P0111 (10)	○	Intake Air Temperature (IAT) Sensor Circuit Range/Performance Problem	ON	(see page 11-73)
P0112 (10)	—	Intake Air Temperature (IAT) Sensor Circuit Low Voltage	ON	(see page 11-74)
P0113 (10)	—	Intake Air Temperature (IAT) Sensor Circuit High Voltage	ON	(see page 11-75)
P0116 (86)	○	Engine Coolant Temperature (ECT) Sensor 1 Circuit Range/ Performance Problem	ON	(see page 11-78)
P0117 (6)	—	Engine Coolant Temperature (ECT) Sensor 1 Circuit Low Voltage	ON	(see page 11-79)
P0118 (6)	—	Engine Coolant Temperature (ECT) Sensor 1 Circuit High Voltage	ON	(see page 11-80)
P0122 (7)	—	Throttle Position (TP) Sensor A Circuit Low Voltage	ON	(see page 11-241)
P0123 (7)	—	Throttle Position (TP) Sensor A Circuit High Voltage	ON	(see page 11-243)
P0125 (86)	○	Engine Coolant Temperature (ECT) Sensor 1 Malfunction/Slow Response	ON	(see page 11-83)
P0128 (87)	○	Cooling System Malfunction	ON	(see page 11-84)
P0133 (61)	○	Air Fuel Ratio (A/F) Sensor (Sensor 1) Malfunction/Slow Response	ON	(see page 11-85)
P0134 (41)	○	Air Fuel Ratio (A/F) Sensor (Sensor 1) Heater System Malfunction	ON	(see page 11-86)
P0135 (41)	—	Air Fuel Ratio (A/F) Sensor (Sensor 1) Heater Circuit Malfunction	ON	(see page 11-87)
P0137 (63)	—	Secondary Heated Oxygen Sensor (Secondary HO2S (Sensor 2)) Circuit Low Voltage	ON	(see page 11-91)
P0138 (63)	—	Secondary Heated Oxygen Sensor (Secondary HO2S (Sensor 2)) Circuit High Voltage	ON	(see page 11-93)
P0139 (63)	○	Secondary Heated Oxygen Sensor (Secondary HO2S (Sensor 2)) Slow Response	ON	(see page 11-96)
P0141 (65)	—	Secondary Heated Oxygen Sensor (Secondary HO2S (Sensor 2)) Heater Circuit Malfunction	ON	(see page 11-97)
P0171 (45)	○	Fuel System Too Lean	ON	(see page 11-101)
P0172 (45)	○	Fuel System Too Rich	ON	(see page 11-101)
P0222 (7)	—	Throttle Position (TP) Sensor B Circuit Low Voltage	ON	(see page 11-245)
P0223 (7)	—	Throttle Position (TP) Sensor B Circuit High Voltage	ON	(see page 11-248)
P0300 (75) and any combination of the following: P0301 (71) P0302 (72) P0303 (73) P0304 (74)	○	Random Misfire Detected	ON	(see page 11-102)
P0301 (71)	○	No. 1 Cylinder Misfire Detected	ON	(see page 11-104)
P0302 (72)	○	No. 2 Cylinder Misfire Detected	ON	(see page 11-104)
P0303 (73)	○	No. 3 Cylinder Misfire Detected	ON	(see page 11-104)
P0304 (74)	○	No. 4 Cylinder Misfire Detected	ON	(see page 11-104)
P0325 (23)	—	Knock Sensor Circuit Malfunction	ON	(see page 11-113)
P0335 (4)	—	Crankshaft Position (CKP) Sensor No Signal	ON	(see page 11-115)
P0339 (4)	—	Crankshaft Position (CKP) Sensor Circuit Intermittent Interruption	ON	(see page 11-118)
P0351 (15)	—	Intake Side Ignition Coil Power Circuit Malfunction	ON	(see page 11-119)
P0352 (15)	—	Exhaust Side Ignition Coil Power Circuit Malfunction	ON	(see page 11-121)
P0365 (8)	—	Camshaft Position (CMP) Sensor No Signal	ON	(see page 11-123)
P0369 (8)	—	Camshaft Position (CMP) Sensor Circuit Intermittent Interruption	ON	(see page 11-126)
P0401 (80)	○	Exhaust Gas Recirculation (EGR) Insufficient Flow	ON	(see page 11-380)
P0404 (12)	○	Exhaust Gas Recirculation (EGR) Valve Circuit Range/Performance Problem	ON	(see page 11-381)
P0406 (12)	—	Exhaust Gas Recirculation (EGR) Valve Position Sensor Circuit High Voltage	ON	(see page 11-384)
P0420 (67)	○	Catalyst System Efficiency Below Threshold	ON	(see page 11-375)

NOTE: The above DTCs are indicated when the PGM-FI system is selected in the HDS.
Some automatic transmission DTCs cause the MIL to come on. If the MIL is on and no DTCs are indicated in the PGM-FI system, select the A/T system, and check for automatic transmission DTCs.

*: These DTCs are indicated by a blinking MIL when the SCS line is jumped with the HDS.

(cont'd)

DTC Troubleshooting Index (cont'd)

DTC (MIL indication*)	Two Drive Cycle Detection	Detection Item	MIL	Note
P0443 (92)	—	Evaporative Emission (EVAP) Canister Purge Valve Circuit Malfunction	ON	(see page 11-398)
P0451 (91)	○	Fuel Tank Pressure (FTP) Sensor Circuit Range/Performance Problem	ON	(see page 11-401)
P0452 (91)	—	Fuel Tank Pressure (FTP) Sensor Circuit Low Voltage	ON	(see page 11-402)
P0453 (91)	—	Fuel Tank Pressure (FTP) Sensor Circuit High Voltage	ON	(see page 11-405)
P0455 (90)	○	Evaporative Emission (EVAP) System Large Leak Detected	ON	(see page 11-408)
P0456 (90)	○	Evaporative Emission (EVAP) System Very Small Leak Detected	ON	(see page 11-408)
P0457 (90)	○	Evaporative Emission (EVAP) System Leak Detected/Fuel Fill Cap Loose or Missing	ON	(see page 11-412)
P0461 (121)	—	Fuel Level Sensor (Fuel Gauge Sending Unit) Range/Performance Problem	OFF	(see page 11-336)
P0462 (121)	—	Fuel Level Sensor (Fuel Gauge Sending Unit) Circuit Low Voltage	OFF	(see page 11-336)
P0463 (121)	—	Fuel Level Sensor (Fuel Gauge Sending Unit) Circuit High Voltage	OFF	(see page 11-338)
P0496 (92)	○	Evaporative Emission (EVAP) System High Purge Flow Detected	ON	(see page 11-414)
P0497 (90)	○	Evaporative Emission (EVAP) System Low Purge Flow Detected	ON	(see page 11-414)
P0498 (117)	—	Evaporative Emission (EVAP) Canister Vent Shut Valve Circuit Low Voltage	ON	(see page 11-417)
P0499 (117)	—	Evaporative Emission (EVAP) Canister Vent Shut Valve Circuit High Voltage	ON	(see page 11-420)
P0506 (14)	○	Idle Control System RPM Lower Than Expected	ON	(see page 11-320)
P0507 (14)	○	Idle Control System RPM Higher Than Expected	ON	(see page 11-322)
P050A (167)	○	Cold Start Idle Air Control System Performance Problem	ON	(see page 11-127)
P050B (167)	○	Cold Start Ignition Timing Control System Performance Problem	ON	(see page 11-129)
P0522 (22)	—	Rocker Arm Oil Pressure Sensor Circuit Low Voltage	ON	(see page 11-280)
P0523 (22)	—	Rocker Arm Oil Pressure Sensor Circuit High Voltage	ON	(see page 11-283)
P0532 (191)	—	A/C Pressure Sensor Circuit Low Voltage	OFF	(see page 11-323)
P0533 (191)	—	A/C Pressure Sensor Circuit High Voltage	OFF	(see page 11-325)
P0563 (34)	—	Powertrain Control Module (PCM) Power Source Circuit Unexpected Voltage	OFF	(see page 11-132)
P0602 (196)	—	Powertrain Control Module (PCM) Programming Error	ON	(see page 11-134)
P0603 (131)*1	—	Powertrain Control Module (PCM) Internal Control Module Keep Alive Memory (KAM) Error	ON	(see page 11-135)
P0606 (0)	—	Powertrain Control Module (PCM) Processor Malfunction	ON	(see page 11-135)
P060A (131)		Powertrain Control Module (PCM) (A/T System) Internal Control Module Malfunction	ON	(see page 11-136)
P062F (196)*2	—	Powertrain Control Module (PCM) Internal Control Module Keep Alive Memory (KAM) Error	ON	(see page 11-135)
P0630 (139)	—	VIN Not Programmed or Mismatch	ON	(see page 11-136)
P0685 (135)	○	Powertrain Control Module (PCM) Power Control Circuit/Internal Circuit Malfunction	ON	(see page 11-137)
P1024 (115)	—	Valve Pause System (VPS) Sticking On	OFF	(see page 11-286)
P1109 (13)	—	Barometric Pressure (BARO) Sensor Circuit Out of Range High	ON	(see page 11-138)
P1116 (86)	○	Engine Coolant Temperature (ECT) Sensor 1 Range/Performance Problem	ON	(see page 11-139)

NOTE: The above DTCs are indicated when the PGM-FI system is selected in the HDS.
Some automatic transmission DTCs cause the MIL to come on. If the MIL is on and no DTCs are indicated in the PGM-FI system, select the A/T system, and check for automatic transmission DTCs.

* : These DTCs are indicated by a blinking MIL when the SCS line is jumped with the HDS.
* 1: '06-08 models
* 2: '09 model

DTC (MIL indication*)	Two Drive Cycle Detection	Detection Item	MIL	Note
P1157 (48)	—	Air Fuel Ratio (A/F) Sensor (Sensor 1) AFS Circuit Malfunction	ON	(see page 11-141)
P1172 (61)	—	Air Fuel Ratio (A/F) Sensor (Sensor 1) Circuit Out of Range High	ON	(see page 11-143)
P1286 (114)	○	Rocker Arm Oil Pressure Sensor Stuck Low	ON	(see page 11-287)
P1287 (114)	○	Rocker Arm Oil Pressure Switch Circuit High Voltage	ON	(see page 11-289)
P1288 (114)	○	Rocker Arm Oil Pressure Switch Circuit Low Voltage	ON	(see page 11-292)
P1289 (114)	○	Rocker Arm Oil Pressure Sensor Stuck High	ON	(see page 11-295)
P128A (114)	○	Valve Pause System (VPS) Stuck OFF	ON	(see page 11-296)
P128B (114)	○	Valve Pause System (VPS) Malfunction	ON	(see page 11-297)
P1297 (20)	—	Electrical Load Detector (ELD) Circuit Low Voltage	OFF	(see page 11-144)
P1298 (20)	—	Electrical Load Detector (ELD) Circuit High Voltage	OFF	(see page 11-146)
P1454 (91)	○	Fuel Tank Pressure (FTP) Sensor Circuit Range/Performance Problem	ON	(see page 11-421)
P1658 (40)	—	Electronic Throttle Control System (ETCS) Control Relay ON Malfunction	ON	(see page 11-250)
P1659 (40)	—	Electronic Throttle Control System (ETCS) Control Relay OFF Malfunction	ON	(see page 11-252)
P1683 (40)	—	Throttle Valve Default Position Spring Performance Problem	ON	(see page 11-256)
P1684 (40)	—	Throttle Valve Return Spring Performance Problem	ON	(see page 11-257)
P16D5 (132)	—	F-CAN Malfunction (Internal Malfunction)	ON	(see page 11-148)
P16D6 (132)	—	IMA-CAN Malfunction (Internal Malfunction)	ON	(see page 11-148)
P2101 (40)	—	Electronic Throttle Control System (ETCS) Malfunction	ON	(see page 11-258)
P2118 (40)	—	Throttle Actuator Current Range/Performance Problem	ON	(see page 11-260)
P2122 (37)	—	Accelerator Pedal Position (APP) Sensor A (Throttle Position (TP) Sensor D) Circuit Low Voltage	ON	(see page 11-262)
P2123 (37)	—	Accelerator Pedal Position (APP) Sensor A (Throttle Position (TP) Sensor D) Circuit High Voltage	ON	(see page 11-265)
P2127 (37)	—	Accelerator Pedal Position (APP) Sensor B (Throttle Position (TP) Sensor E) Circuit Low Voltage	ON	(see page 11-266)
P2128 (37)	—	Accelerator Pedal Position (APP) Sensor B (Throttle Position (TP) Sensor E) Circuit High Voltage	ON	(see page 11-269)
P2135 (7)	—	Throttle Position (TP) Sensor A/B Incorrect Voltage Correlation	ON	(see page 11-271)
P2138 (37)	—	Accelerator Pedal Position (APP) Sensor A/B (Throttle Position (TP) Sensor D/E) Incorrect Voltage Correlation	ON	(see page 11-273)
P2176 (40)	—	Throttle Actuator Control System Idle Position Not Learned	ON	(see page 11-275)
P2183 (192)	○	Engine Coolant Temperature (ECT) Sensor 2 Circuit Range/ Performance Problem	ON	(see page 11-149)
P2184 (192)	—	Engine Coolant Temperature (ECT) Sensor 2 Circuit Low Voltage	ON	(see page 11-151)
P2185 (192)	—	Engine Coolant Temperature (ECT) Sensor 2 Circuit High Voltage	ON	(see page 11-152)
P2195 (48)	—	Air Fuel Ratio (A/F) Sensor (Sensor 1) Signal Stuck Lean	ON	(see page 11-155)
P2227 (13)	○	Barometric Pressure (BARO) Sensor Circuit Range/Performance Problem	ON	(see page 11-156)
P2228 (13)	—	Barometric Pressure (BARO) Sensor Circuit Low Voltage	ON	(see page 11-157)
P2229 (13)	—	Barometric Pressure (BARO) Sensor Circuit High Voltage	ON	(see page 11-158)
P2238 (48)	—	Air Fuel Ratio (A/F) Sensor (Sensor 1) AFS+ Circuit Low Voltage	ON	(see page 11-158)
P2252 (48)	—	Air Fuel Ratio (A/F) Sensor (Sensor 1) AFS− Circuit Low Voltage	ON	(see page 11-160)
P2270 (63)	○	Secondary Heated Oxygen Sensor (Secondary HO2S (Sensor 2)) Circuit Signal Stuck Lean	ON	(see page 11-162)
P2271 (63)	○	Secondary Heated Oxygen Sensor (Secondary HO2S (Sensor 2)) Circuit Signal Stuck Rich	ON	(see page 11-162)
P2279 (109)	○	Intake Air System Leak Detected	ON	(see page 11-394)
P2413 (12)	○	Exhaust Gas Recirculation (EGR) System Malfunction	ON	(see page 11-386)

NOTE: The above DTCs are indicated when the PGM-FI system is selected in the HDS.
Some automatic transmission DTCs cause the MIL to come on. If the MIL is on and no DTCs are indicated in the PGM-FI system, select the A/T system, and check for automatic transmission DTCs.

*: These DTCs are indicated by a blinking MIL when the SCS line is jumped with the HDS.

(cont'd)

DTC Troubleshooting Index (cont'd)

DTC (MIL indication*)	Two Drive Cycle Detection	Detection Item	MIL	Note
P2422 (117)	○	Evaporative Emission (EVAP) Canister Vent Shut Valve Stuck Closed Malfunction	ON	(see page 11-421)
P2610 (132)	——	Powertrain Control Module (PCM) Ignition Off Internal Timer Malfunction	ON	(see page 11-163)
P2647 (114)	○	VTEC System Stuck ON	ON	(see page 11-301)
P2648 (21)	——	Rocker Arm Oil Control Solenoid 2 Circuit Low Voltage	ON	(see page 11-302)
P2649 (21)	——	Rocker Arm Oil Control Solenoid 2 Circuit High Voltage	ON	(see page 11-303)
P2651 (114)	○	Valve Pause System (VPS) Stuck OFF	ON	(see page 11-306)
P2652 (114)	○	Valve Pause System (VPS) Stuck ON	ON	(see page 11-307)
P2653 (38)	——	Rocker Arm Oil Control Solenoid 1 Circuit Low Voltage	ON	(see page 11-308)
P2654 (38)	——	Rocker Arm Oil Control Solenoid 1 Circuit High Voltage	ON	(see page 11-310)
P2A00 (61)	○	Air Fuel Ratio (A/F) Sensor (Sensor 1) Circuit Range/Performance Problem	ON	(see page 11-163)
P3400 (114)	○	Valve Pause System (VPS) Stuck OFF	ON	(see page 11-313)
U0028 (126)	——	F-CAN Malfunction (BUS-OFF)	ON	(see page 11-164)
U0037 (112)	——	IMA-CAN Malfunction (BUS-OFF)	ON	(see page 11-165)
U0110 (126)	——	F-CAN Malfunction (Powertrain Control Module (PCM)-Motor Control Module (MCM))	ON	(see page 11-170)
U0111 (126)	——	F-CAN Malfunction (Powertrain Control Module (PCM)-Battery Condition Monitor (BCM))	ON	(see page 11-175)
U0121 (126)*3	——	F-CAN Malfunction (Powertrain Control Module (PCM)-Anti-Lock Brake System (ABS) Modulator-Control Unit)	OFF	(see page 11-177)
U0122 (126)*4	——	F-CAN Malfunction (Powertrain Control Module (PCM)-VSA Modulator-Control Unit)	OFF	(see page 11-179)
U0129 (126)	——	F-CAN Malfunction (Powertrain Control Module (PCM)-Servo Unit)	OFF	(see page 11-181)
U0155 (126)	——	F-CAN Malfunction (Powertrain Control Module (PCM)-Gauge Control Module)	ON	(see page 11-183)
U1205 (112)	——	IMA-CAN Malfunction (Powertrain Control Module (PCM)-Motor Control Module (MCM))	ON	(see page 11-185)
U1206 (112)	——	IMA-CAN Malfunction (Powertrain Control Module (PCM)-Battery Condition Monitor (BCM) Module)	ON	(see page 11-190)
U1207 (112)	——	IMA-CAN Malfunction (Powertrain Control Module (PCM)-A/C Compressor Driver)	OFF	(see page 11-192)

NOTE: The above DTCs are indicated when the PGM-FI system is selected in the HDS.
Some automatic transmission DTCs cause the MIL to come on. If the MIL is on and no DTCs are indicated in the PGM-FI system, select the A/T system, and check for automatic transmission DTCs.

* : These DTCs are indicated by a blinking MIL when the SCS line is jumped with the HDS.
* 3: With ABS
* 4: With VSA system

Symptom Troubleshooting Index

When the vehicle has one of these symptoms, check for a diagnostic trouble code (DTC) with the HDS. If there is no DTC, do the diagnostic procedure for the symptom, in the sequence listed, until you find the cause.

Symptom	Diagnostic procedure	Also check for
Engine will not start (MIL works OK, no DTCs set, IMA motor works OK)	1. Test the 12 V battery (see page 22-61). 2. Test the starter (see page 4-9). 3. Check the fuel pressure; • '06 model (see page 11-350). • '07-09 models (see page 11-350). 4. Troubleshoot the fuel pump circuit (see page 11-341).	• Low compression • No ignition spark • Intake air leaks • Locked up engine • Broken cam chain • Fuel contamination
Engine will not start (MIL comes on and stays on, no DTCs set, starter or IMA motor works OK)	Troubleshoot the DLC circuit (see page 11-213).	• No power to PCM • No ground to PCM • Shorted reference voltage
MIL comes on and stays on, or never comes on at all, no DTCs set	Troubleshoot the MIL circuit (see page 11-212).	
Engine will not start (MIL works OK, no DTCs set, immobilizer indicator stays on or flashes)	Check the immobilizer system (see page 22-291).	
Engine starts but stalls immediately (MIL works OK, no DTCs set, immobilizer indicator stays on or flashes)	Check the immobilizer system (see page 22-291).	
Engine is hard to start (MIL works OK, no DTCs set)	1. Test the 12 V battery (see page 22-61). 2. Check the fuel pressure; • '06 model (see page 11-350). • '07-09 models (see page 11-350). 3. Clean the throttle body (see page 11-370).	• Low compression • Intake air leaks • Fuel contamination • Weak spark
Cold fast idle too low (MIL works OK, no DTCs set)	1. Do the PCM idle learn procedure (see page 11-333). 2. Check the idle speed (see page 11-332). 3. Clean the throttle body (see page 11-370).	
Cold fast idle too high (MIL works OK, no DTCs set)	1. Do the PCM idle learn procedure (see page 11-333). 2. Check the idle speed (see page 11-332). 3. Do the throttle position learning check (see page 11-369).	Intake air leaks
Idle speed fluctuates (MIL works OK, no DTCs set)	1. Do the PCM idle learn procedure (see page 11-333). 2. Check the idle speed (see page 11-332). 3. Do the carbon accumulation check (see page 11-369). 4. Troubleshoot the A/C signal circuit (see page 11-329).	Intake air leaks
After warming up, idle speed is below specification without load (MIL works OK, no DTCs set)	Do the carbon accumulation check (see page 11-369).	Incorrect valve adjustment
After warming up, idle speed is above specification without load (MIL works OK, no DTCs set)	Inspect the APP sensor (see page 11-277).	Intake air leaks

(cont'd)

Symptom Troubleshooting Index (cont'd)

Symptom	Diagnostic procedure	Also check for
Low power (MIL works OK, no DTCs set)	Check the fuel pressure; • '06 model (see page 11-350). • '07-09 models (see page 11-350).	• Low compression • Incorrect camshaft timing • Incorrect engine oil level • Fuel contamination
Auto idle stop system does not work	Troubleshoot the brake pedal position switch signal circuit (see page 11-330).	
Engine stalls (MIL works OK, no DTCs set)	1. Check the idle speed (see page 11-332). 2. Check the fuel pressure; • '06 model (see page 11-350). • '07-09 models (see page 11-350). 3. Do the PCM idle learn procedure (see page 11-333). 4. Troubleshoot the brake pedal position switch signal circuit (see page 11-330).	• Intake air leaks • Faulty harness and sensor connections • Fuel contamination
Difficult to refuel (MIL works OK, no DTCs set)	1. Check the fuel vent tube between the EVAP canister and the fuel tank. 2. Check the fuel tank vapor recirculation tube between the fuel pipe and the fuel tank. 3. Replace the fuel tank (see page 11-365).	• Malfunctioning gas station filling nozzle. • Filler neck restriction • Faulty fuel tank vapor control valve
Fuel overflows during refueling (No DTCs set)	1. Inspect the fuel filler neck for restrictions. 2. Replace the fuel tank (see page 11-365).	Malfunctioning gas station filling nozzle.
HDS does not communicate with the PCM or the vehicle	Troubleshoot the DLC circuit (see page 11-213).	Correct HDS software

System Description

Electronic Control System

The functions of the fuel and emission control systems are managed by the powertrain control module (PCM).

Self-diagnosis
The PCM detects a failure of a signal a sensor or another control unit and stores a Temporary DTC or a DTC. Depending on the failure, a DTC is stored in either the first or the second drive cycle (DTC P0457 turn on the malfunction indicator lamp (MIL) during the third drive cycle). When a DTC is stored, the PCM turns on the MIL by a signal sent to the gauge control module, via F-CAN.

- **One Drive Cycle Detection Method**
  When an abnormality occurs in the signal from a sensor or from another control unit, the PCM stores a DTC and turns on the MIL immediately.

- **Two Drive Cycle Detection Method**
  When an abnormality occurs in the signal from a sensor or from another control unit in the first drive cycle, the PCM stores a Temporary DTC. If the failure continues in the second drive cycle, the PCM stores a DTC and turns on the MIL.

Fail-safe Function
When an abnormality occurs in the signal from a sensor or another control unit, the PCM ignores that signal and substitutes a pre-programmed value for them that allows the engine to continue running. This causes a DTC to be stored and the MIL to come on.

MIL Bulb Check and Readiness Code Condition
When the ignition switch is turned to ON (II), the PCM turns on the MIL via the F-CAN circuit for about 15 to 20 seconds to check the bulb condition. If any readiness codes are not set to complete, the MIL flashes five times. If all readiness codes are set to complete, the MIL goes off.

Self Shut Down (SSD) Mode
After the ignition switch is turned to LOCK (0), the PCM stays on (up to 30 minutes). If the PCM connector is disconnected during this time, the PCM may be damaged. To cancel this mode, disconnect the negative cable from the battery or jump the SCS line with the HDS after the ignition switch is turned to LOCK (0).

(cont'd)

System Description (cont'd)

PCM Electrical Connections

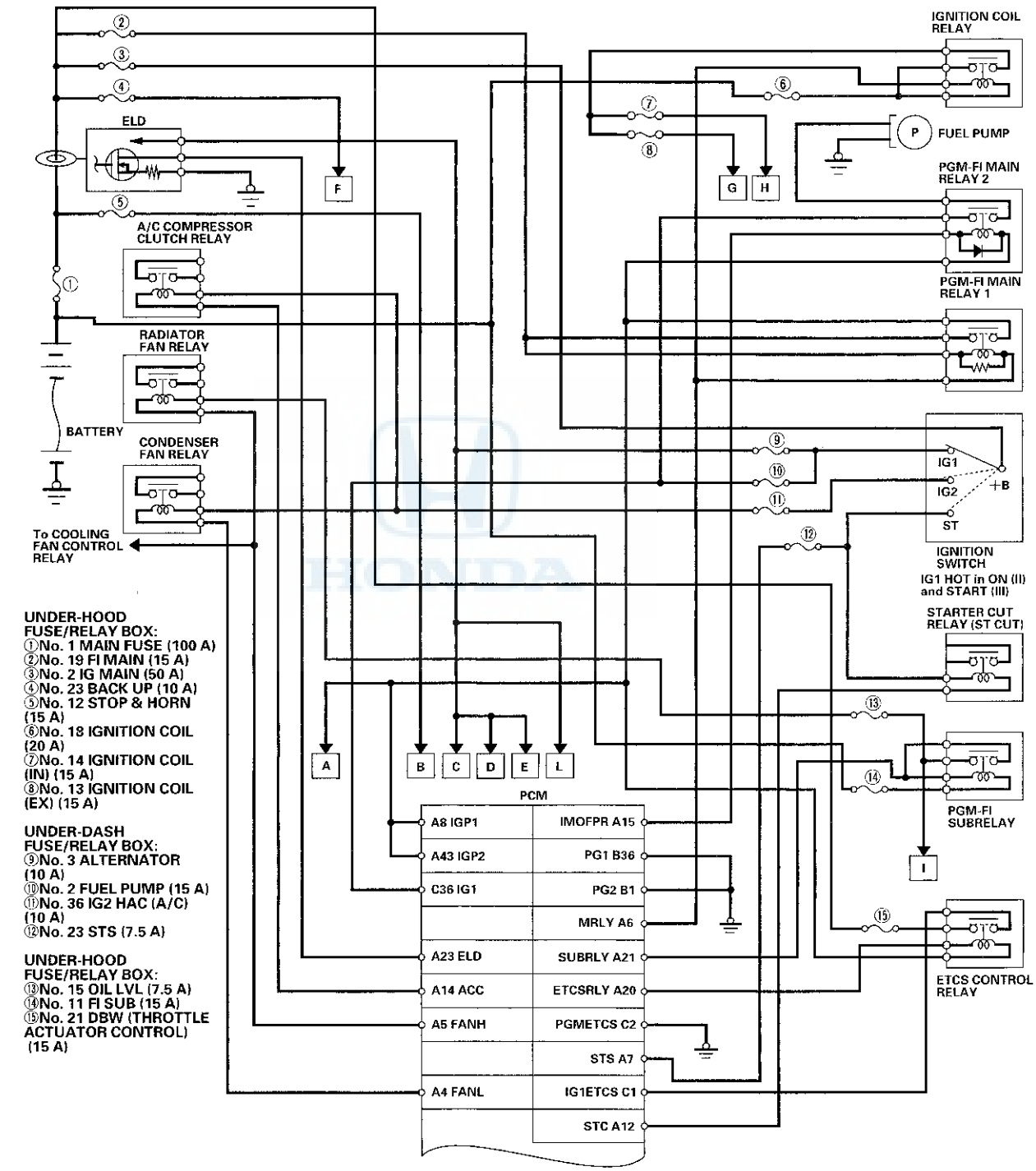

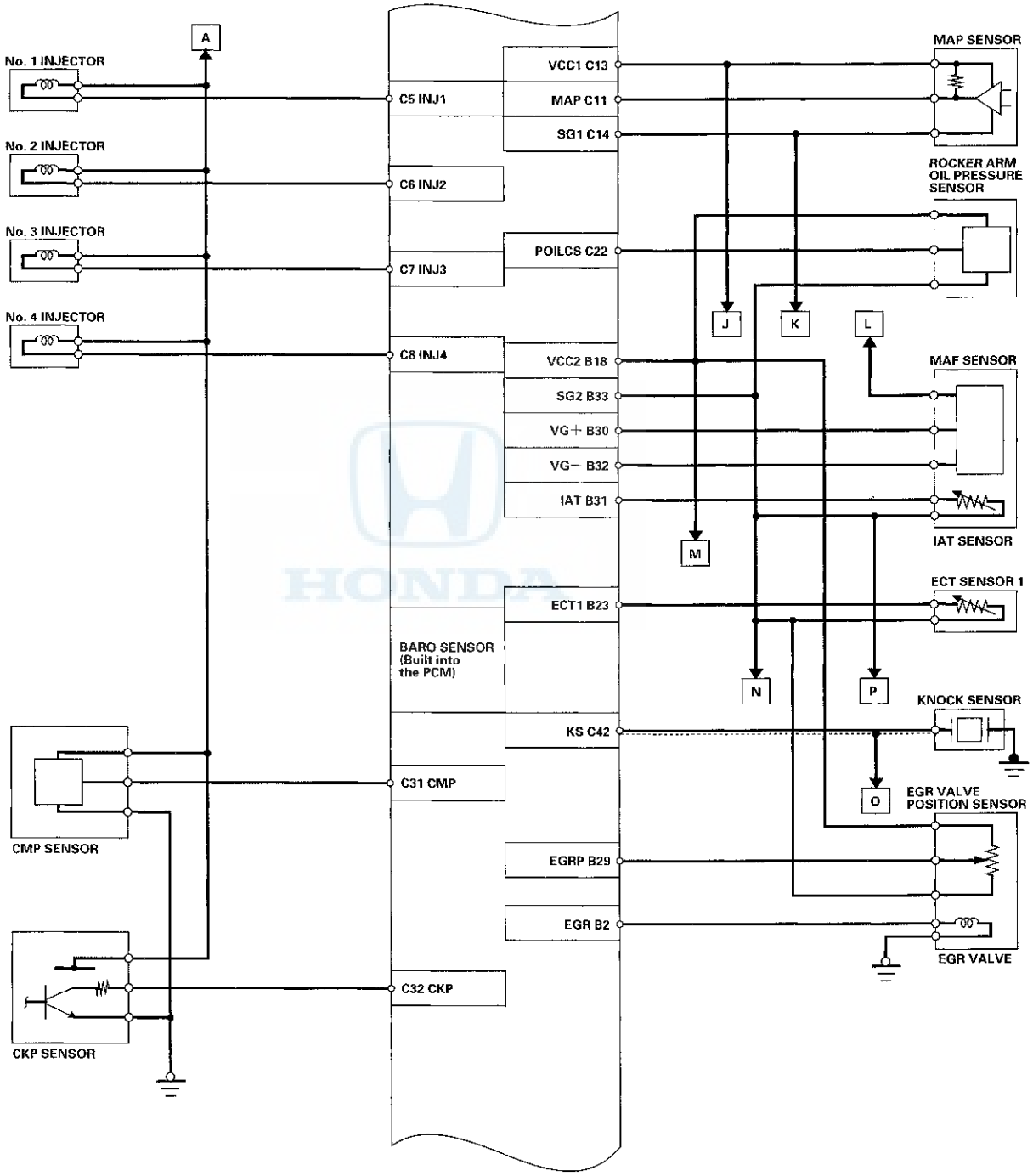
A
No. 1 INJECTOR
No. 2 INJECTOR
No. 3 INJECTOR
No. 4 INJECTOR
C5 INJ1
C6 INJ2
C7 INJ3
C8 INJ4
VCC1 C13
MAP C11
SG1 C14
POILCS C22
VCC2 B18
SG2 B33
VG+ B30
VG− B32
IAT B31
ECT1 B23
BARO SENSOR (Built into the PCM)
KS C42
C31 CMP
EGRP B29
EGR B2
C32 CKP
MAP SENSOR
ROCKER ARM OIL PRESSURE SENSOR
MAF SENSOR
IAT SENSOR
ECT SENSOR 1
KNOCK SENSOR
EGR VALVE POSITION SENSOR
EGR VALVE
CMP SENSOR
CKP SENSOR
J
K
L
M
N
P
O

(cont'd)

System Description (cont'd)

PCM Electrical Connections (cont'd)

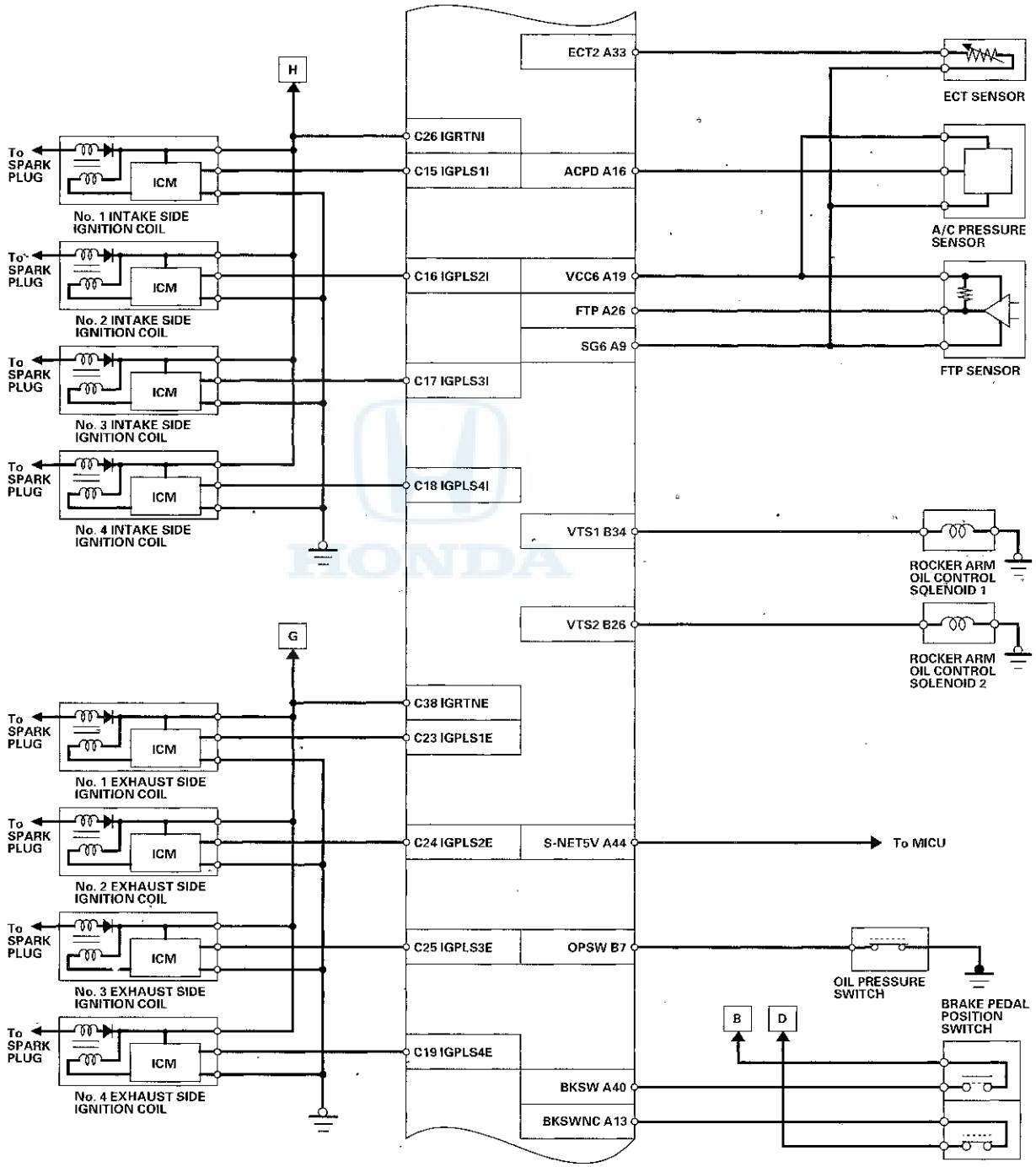

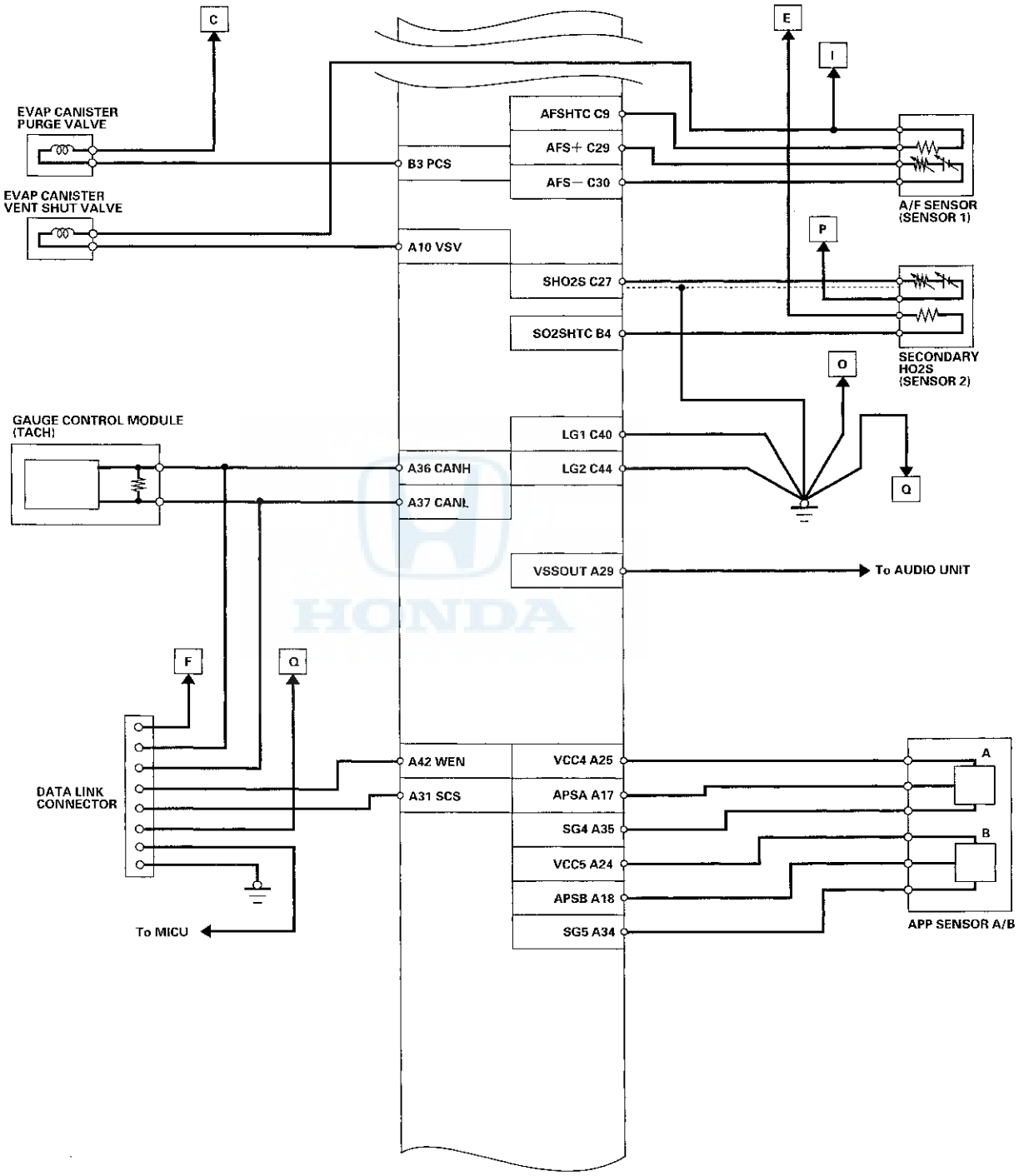
C
E
I
EVAP CANISTER PURGE VALVE
EVAP CANISTER VENT SHUT VALVE
B3 PCS
A10 VSV
AFSHTC C9
AFS+ C29
AFS− C30
A/F SENSOR (SENSOR 1)
P
SHO2S C27
SO2SHTC B4
SECONDARY HO2S (SENSOR 2)
O
GAUGE CONTROL MODULE (TACH)
LG1 C40
LG2 C44
A36 CANH
A37 CANL
Q
VSSOUT A29
To AUDIO UNIT
F
Q
DATA LINK CONNECTOR
A42 WEN
A31 SCS
VCC4 A25
APSA A17
SG4 A35
VCC5 A24
APSB A18
SG5 A34
A
B
APP SENSOR A/B
To MICU

(cont'd)

System Description (cont'd)

PCM Electrical Connections (cont'd)

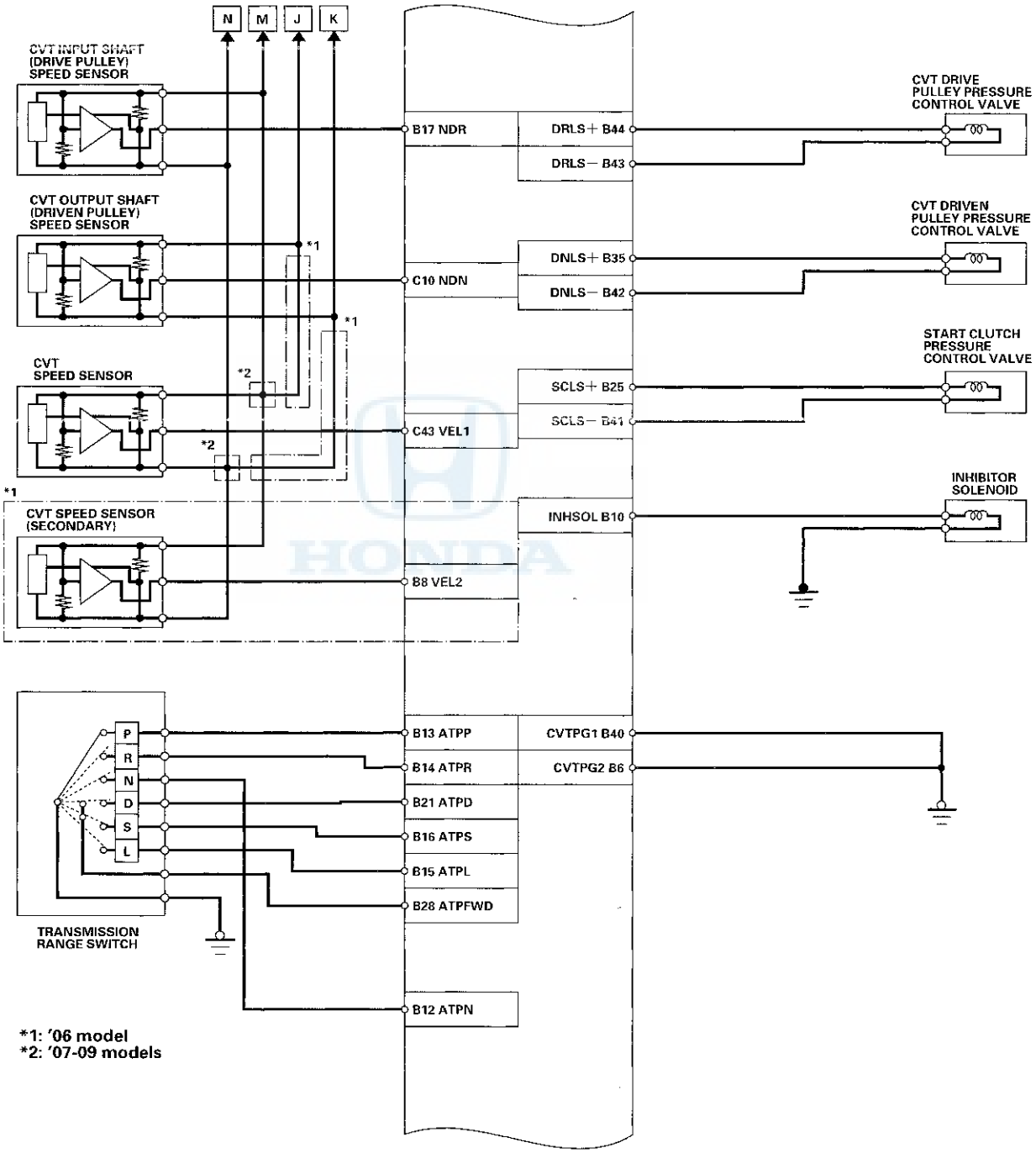

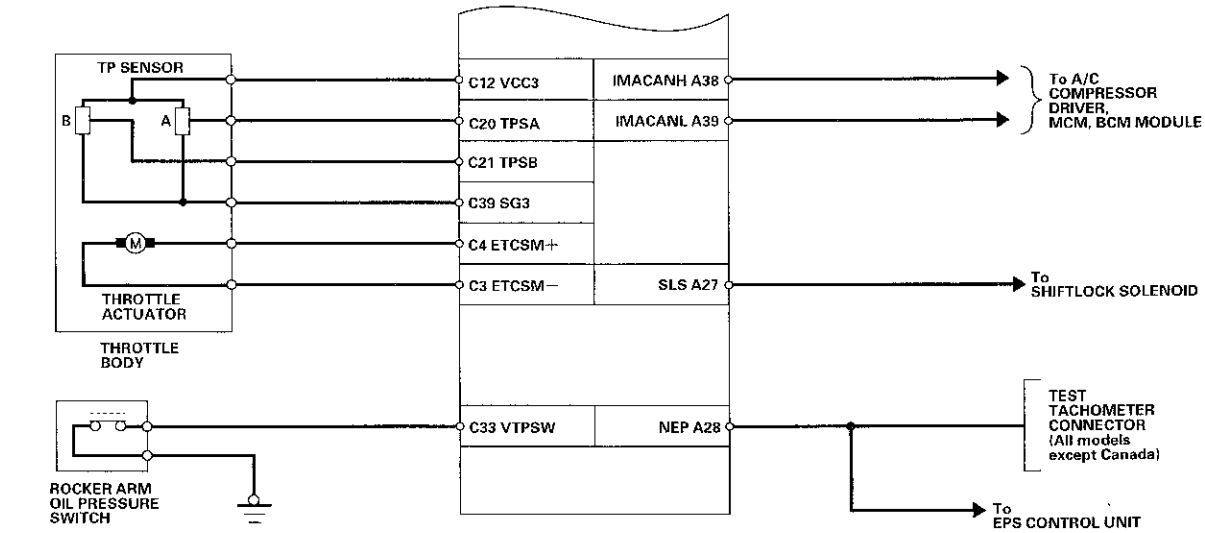

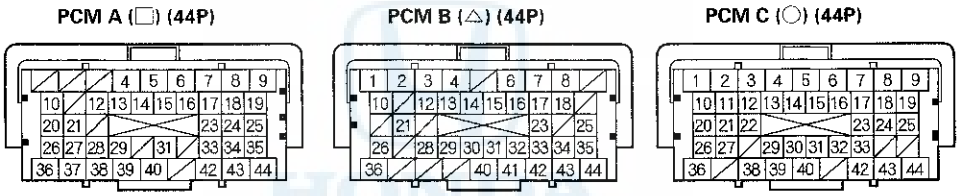

TERMINAL LOCATIONS

(cont'd)

System Description (cont'd)

Vacuum Hose Routing

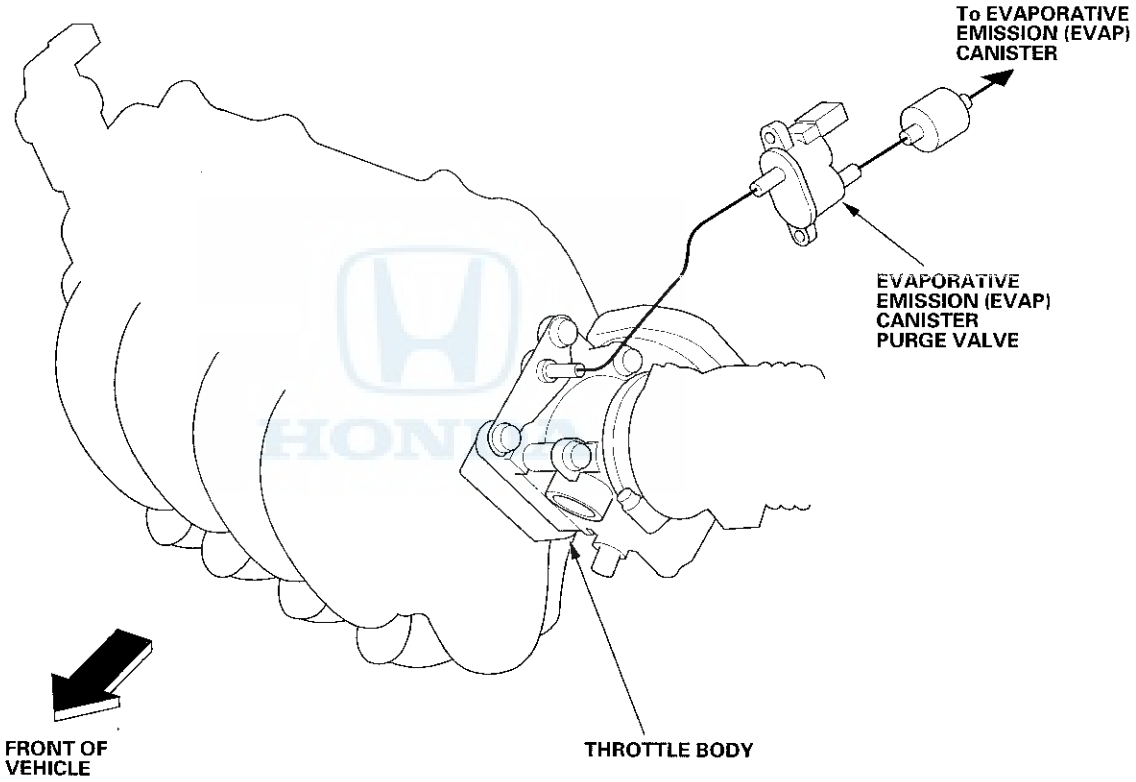

Vacuum Distribution

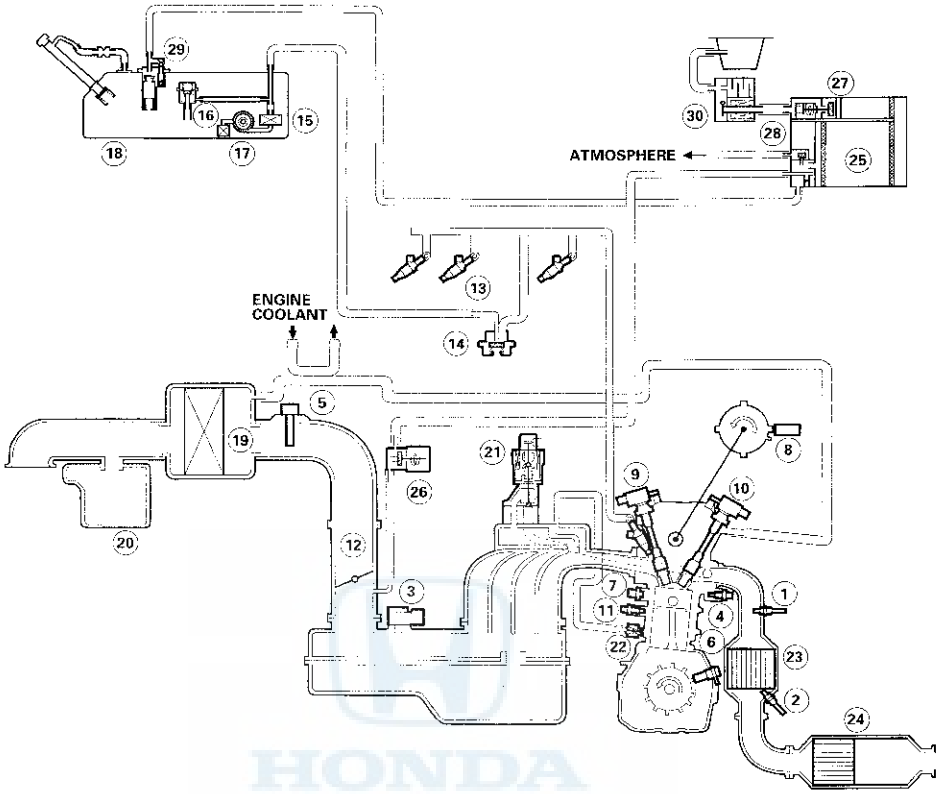

① AIR FUEL RATIO (A/F) SENSOR (SENSOR 1)
② SECONDARY HEATED OXYGEN SENSOR (SECONDARY HO2S) (SENSOR 2)
③ MANIFOLD ABSOLUTE PRESSURE (MAP) SENSOR
④ ENGINE COOLANT TEMPERATURE (ECT) SENSOR
⑤ MASS AIR FLOW (MAF) SENSOR/ INTAKE AIR TEMPERATURE (IAT) SENSOR
⑥ CRANKSHAFT POSITION (CKP) SENSOR
⑦ KNOCK SENSOR
⑧ CAMSHAFT POSITION (CMP) SENSOR
⑨ INTAKE SIDE IGNITION COIL
⑩ EXHAUST SIDE IGNITION COIL
⑪ OIL PRESSURE SWITCH
⑫ THROTTLE BODY
⑬ INJECTOR
⑭ FUEL PULSATION DAMPER
⑮ FUEL FILTER
⑯ FUEL PRESSURE REGULATOR
⑰ FUEL PUMP
⑱ FUEL TANK
⑲ AIR CLEANER
⑳ INTAKE AIR RESONATOR
㉑ EXHAUST GAS RECIRCULATION (EGR) VALVE and POSITION SENSOR
㉒ POSITIVE CRANKCASE VENTILATION (PCV) VALVE
㉓ WARM UP THREE WAY CATALYTIC CONVERTER (WU-TWC)
㉔ UNDER-FLOOR THREE WAY CATALYTIC CONVERTER (TWC)
㉕ EVAPORATIVE EMISSION (EVAP) CANISTER
㉖ EVAPORATIVE EMISSION (EVAP) CANISTER PURGE VALVE
㉗ EVAPORATIVE EMISSION (EVAP) CANISTER VENT SHUT VALVE
㉘ FUEL TANK PRESSURE (FTP) SENSOR
㉙ FUEL TANK VAPOR CONTROL VALVE
㉚ EVAPORATIVE EMISSION (EVAP) CANISTER FILTER

(cont'd)

System Description (cont'd)

PCM Inputs and Outputs at Connector A (□) (44P)

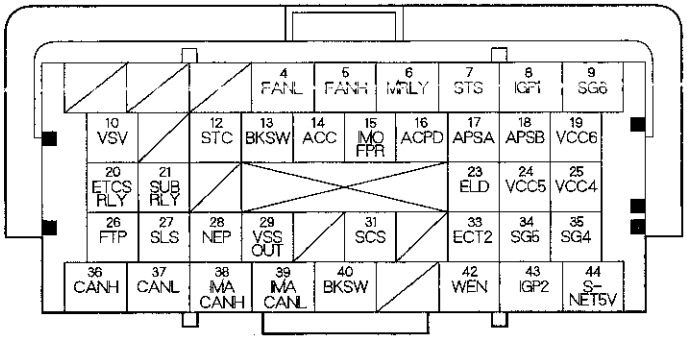

Terminal side of female terminals

NOTE: Standard battery voltage is about 12 V.

Terminal number	Wire color	Terminal name	Description	Signal
4	PUR	FANL (RADIATOR FAN CONTROL)	Drives radiator fan relay	With radiator fan running: about 0 V With radiator fan stopped: battery voltage
5	GRY	FANH (RADIATOR FAN CONTROL)	Drives A/C condenser fan relay	With A/C condenser fan running: about 0 V With A/C condenser fan stopped: battery voltage
6	GRN	MRLY (PGM-FI MAIN RELAY 1)	Drives PGM-FI main relay 1 Power source for DTC memory	With ignition switch ON (II): about 0 V With ignition switch OFF: battery voltage
7	LT BLU	STS (STARTER SWITCH SIGNAL)	Detects starter switch signal	With starter switch ON (III): battery voltage With starter switch OFF: about 0 V
8	ORN	IGP1 (POWER SOURCE 1)	Power source for PCM circuit	With ignition switch ON (II): battery voltage
9	BLK	SG6 (SENSOR GROUND)	Sensor ground	Less than 1.0 V at all times
10	LT GRN	VSV (EVAPORATIVE EMISSION (EVAP) CANISTER VENT SHUT VALVE)	Drives EVAP canister vent shut valve	With ignition switch ON (II): battery voltage
12	WHT	STC (STARTER CUT RELAY)	Drives starter cut relay	With ignition switch in START (III): battery voltage
13	BRN	BKSWNC (BRAKE PEDAL POSITION SWITCH)	Detects brake pedal position switch signal	With ignition switch ON (II) and brake pedal released: battery voltage With ignition switch ON (II) and brake pedal pressed: about 0 V
14	RED	ACC (A/C COMPRESSOR CLUTCH RELAY)	Drives A/C compressor clutch relay	With compressor ON: about 0 V With compressor OFF: battery voltage
15	BRN	IMOFPR (IMMOBILIZER FUEL PUMP RELAY)	Drives PGM-FI main relay 2 (FUEL PUMP)	About 0 V for 2 seconds after turning ignition switch ON (II), then battery voltage
16	LT GRN	ACPD (A/C PRESSURE SENSOR)	Detects A/C pressure sensor signal	With A/C switch ON: about 1.7—4.8 V (depending on A/C pressure)
17	YEL	APSA (ACCELERATOR PEDAL POSITION (APP) SENSOR A)	Detects APP sensor A signal	With ignition switch ON (II) and accelerator pedal pressed: about 4.7 V With ignition switch ON (II) and accelerator pedal released: about 0.5 V
18	PUR	APSB (ACCELERATOR PEDAL POSITION (APP) SENSOR B)	Detects APP sensor B signal	With ignition switch ON (II) and accelerator pedal pressed: about 2.3 V With ignition switch ON (II) and accelerator pedal released: about 0.25 V
19	RED	VCC6 (SENSOR VOLTAGE)	Provides sensor reference voltage	With ignition switch ON (II): about 5.0 V
20	YEL	ETCSRLY (ELECTRONIC THROTTLE CONTROL SYSTEM (ETCS) CONTROL RELAY)	Drives electronic throttle control system (ETCS) control relay	With ignition switch ON (II): about 0 V (4.0 V momentarily)
21	PNK	SUBRLY (PGM-FI SUBRELAY)	Drives PGM-FI subrelay	With ignition switch ON (II): about 0 V

PCM Inputs and Outputs at Connector A (□) (44P)

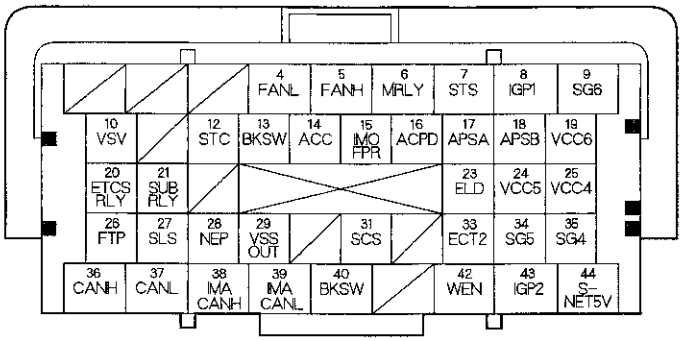

Terminal side of female terminals

NOTE: Standard battery voltage is about 12 V.

Terminal number	Wire color	Terminal name	Description	Signal
23	ORN	ELD (ELECTRICAL LOAD DETECTOR (ELD))	Detects ELD signal	With ignition switch ON (II): about 0.1—4.8 V (depending on electrical load)
24	LT GRN	VCC5 (SENSOR VOLTAGE)	Provides sensor reference voltage	With ignition switch ON (II): about 5.0 V
25	YEL	VCC4 (SENSOR VOLTAGE)	Provides sensor reference voltage	With ignition switch ON (II): about 5.0 V
26	LT GRN	FTP (FUEL TANK PRESSURE (FTP) SENSOR)	Detects FTP sensor signal	With ignition switch ON (II) and fuel fill cap removed: about 2.5 V
27	PNK	SLS (SHIFT LOCK SOLENOID)	Drives shift lock solenoid	With ignition switch ON (II), in the P, brake pedal pressed, and accelerator released: battery voltage
28	BLU	NEP (ENGINE SPEED PULSE)	Outputs engine speed pulse	With engine running: pulses
29	BLU	VSSOUT (VEHICLE SPEED SIGNAL OUTPUT)	Sends vehicle speed signal	Depending on vehicle speed: pulses
31	BRN	SCS (SERVICE CHECK SIGNAL)	Detects service check signal	With service check signal shorted using the HDS: about 0 V With service check signal opened: about 5.0 V
33	GRN	ECT2 (ENGINE COOLANT TEMPERATURE (ECT) SENSOR 2)	Detects ECT sensor 2 signal	With ignition switch ON (II): about 0.1—4.8 V (depending on engine coolant temperature)
34	BLU	SG5 (SENSOR GROUND)	Sensor ground	Less than 1.0 V at all times
35	BLU	SG4 (SENSOR GROUND)	Sensor ground	Less than 1.0 V at all times
36	WHT	CANH (CAN COMMUNICATION SIGNAL HIGH)	Sends communication signal	With ignition switch ON (II): about 2.5 V (pulses)
37	RED	CANL (CAN COMMUNICATION SIGNAL LOW)	Sends communication signal	With ignition switch ON (II): about 2.5 V (pulses)
38	WHT	IMACANH (CAN COMMUNICATION SIGNAL HIGH)	Detects communication signal to BCM module, MCM, and A/C compressor driver	With ignition switch ON (II): pulses
39	RED	IMACANL (CAN COMMUNICATION SIGNAL LOW)	Detects communication signal to BCM module, MCM, and A/C compressor driver	With ignition switch ON (II): pulses
40	LT GRN	BKSW (BRAKE PEDAL POSITION SWITCH)	Detects brake pedal position switch signal	With brake pedal released: about 0 V With brake pedal pressed: battery voltage
42	RED	WEN (WRITE ENABLE SIGNAL)	Detects write enable signal	With ignition switch ON (II): about 0 V
43	ORN	IGP2 (POWER SOURCE 2)	Power source for PCM circuit	With ignition switch ON (II): battery voltage
44	PNK	S-NET5V (SERIAL COMMUNICATION FOR IMMOBILIZER)	Sends serial communication signal	With ignition switch ON (II): pulses With ignition switch OFF: about 5.0 V

(cont'd)

System Description (cont'd)

PCM Inputs and Outputs at Connector B ( ) (44P)

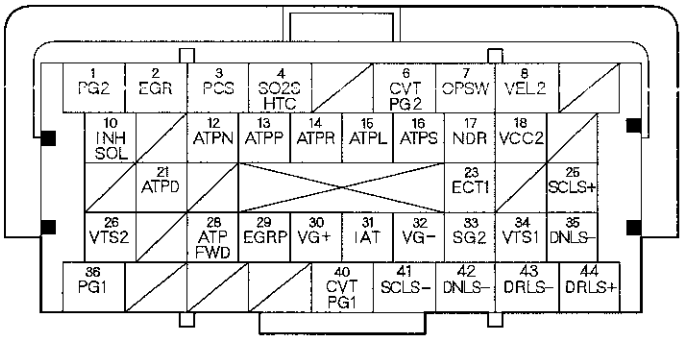

Terminal side of female terminals

NOTE: Standard battery voltage is about 12 V.

Terminal number	Wire color	Terminal name	Description	Signal
1	BRN	PG2 (POWER GROUND)	Ground circuit for PCM	Less than 1.0 V at all times
2	BLU/RED	EGR (EXHAUST GAS RECIRCULATION (EGR) VALVE)	Drives EGR valve	With EGR operating: duty controlled With EGR not operating: about 0 V
3	YEL/BLU	PCS (EVAPORATIVE EMISSION (EVAP) CANISTER PURGE VALVE)	Drives EVAP canister purge valve	With engine running, engine coolant below 113 °F (45 °C): battery voltage With engine running, engine coolant above 113 °F (45 °C): duty controlled
4	GRN/WHT	SO2SHTC (SECONDARY HEATED OXYGEN SENSOR (SECONDARY HO2S) HEATER (SENSOR 2))	Drives rear secondary HO2S heater (sensor 2)	With ignition switch ON (II): battery voltage With warmed up engine running: duty controlled
6	BLK	CVTPG2 (POWER GROUND)	Ground circuit for PCM	Less than 1.0 V at all times
7	YEL/RED	OPSW (OIL PRESSURE SWITCH)	Detects engine oil pressure signal	With ignition switch OFF: about 0 V With engine running: battery voltage
8*	WHT/BLK	VEL2 (CVT SPEED SENSOR (SECONDARY))	Detects CVT speed sensor (secondary)	With ignition switch ON (II): about 0 V or about 5.0 V With vehicle moving: about 2.5 V (pulses)
10	GRN/BLK	INHSOL (INHIBITOR SOLENOID CONTROL)	Driver's inhibitor solenoid valve	With engine running in P, N, D, S, and L: battery voltage With engine running in R position: about 0 V
12	BLK/RED	ATPN (TRANSMISSION RANGE SWITCH N)	Detects transmission range switch N position signal input	In N: about 0 V In any position other than N: about 5.0 V
13	BLU/BLK	ATPP (TRANSMISSION RANGE SWITCH P)	Detects transmission range switch P position signal input	In P: about 0 V In any position other than P: battery voltage
14	WHT	ATPR (TRANSMISSION RANGE SWITCH R)	Detects transmission range switch R position signal input	In R: about 0 V In any position other than R: battery voltage
15	BLU	ATPL (TRANSMISSION RANGE SWITCH L)	Detects transmission range switch L position signal input	In L: about 0 V In any position other than L: battery voltage
16	BLU/WHT	ATPS (TRANSMISSION RANGE SWITCH S)	Detects transmission range switch S position signal input	In S: about 0 V In any position other than S: battery voltage

*: '06 model

PCM Inputs and Outputs at Connector B ( ) (44P)

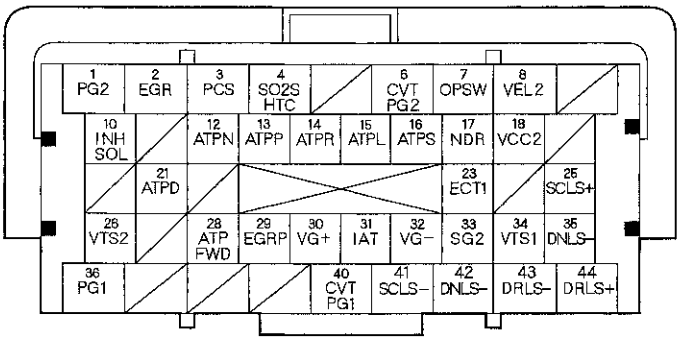

Terminal side of female terminals

NOTE: Standard battery voltage is about 12 V.

Terminal number	Wire color	Terminal name	Description	Signal
17	RED/BLU	NDR (CVT INPUT SHAFT (DRIVE PULLEY) SPEED SENSOR)	Detects CVT input shaft (drive pulley) speed sensor signal	With ignition switch ON (II): about 0 V or about 5.0 V With engine idling in N: about 2.5 V (pulses)
18	YEL/BLU	VCC2 (SENSOR VOLTAGE)	Provides sensor voltage	With ignition switch ON (II): about 5.0 V
21	PNK	ATPD (TRANSMISSION RANGE SWITCH D)	Detects transmission range switch D position signal input	In D: about 0 V In any position other than D: battery voltage
23	RED/WHT	ECT1 (ENGINE COOLANT TEMPERATURE (ECT) SENSOR 1)	Detects ECT sensor 1 signal	With ignition switch ON (II): about 0.1−4.8 V (depending on engine coolant temperature)
25	YEL	SCLS+ (CVT START CLUTCH PRESSURE CONTROL VALVE +SIDE)	Drives CVT start clutch pressure control valve	With ignition switch ON (II): pulses
26	YEL	VTS2 (ROCKER ARM OIL CONTROL SOLENOID 1)	Drives rocker arm oil control solenoid 1	At idle: about 0 V
28	RED	ATPFWD (TRANSMISSION RANGE SWITCH FWD POSITION)	Detects transmission range switch FWD position signal	In D and S: about 0 V In any position other than D and S: battery voltage
29	WHT/BLK	EGRP (EXHAUST GAS RECIRCULATION (EGR) VALVE POSITION SENSOR)	Detects EGR valve position sensor signal	With engine running: 1.2−3.0 V (depending on EGR valve lift)

(cont'd)

System Description (cont'd)

PCM Inputs and Outputs at Connector B ( ) (44P)

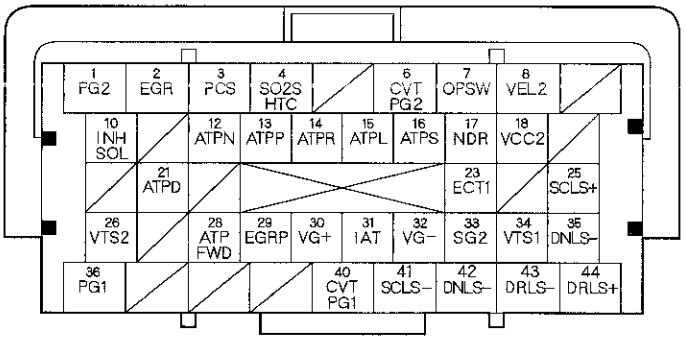

Terminal side of female terminals

NOTE: Standard battery voltage is about 12 V.

Terminal number	Wire color	Terminal name	Description	Signal
30	RED/BLK	VG+ (MASS AIR FLOW (MAF) SENSOR SIDE)	Detects MAF sensor signal	At idle: 1.1—1.6 V (between VG+ terminal and VG− terminal)
31	RED/YEL	IAT (INTAKE AIR TEMPERATURE (IAT) SENSOR)	Detects IAT sensor signal	With ignition switch ON (II): about 0.1—4.0 V (about 1.8 V at normal operating temperature)
32	BLK/RED	VG− (MASS AIR FLOW (MAF) SENSOR SIDE)	Ground for MAF sensor signal	
33	GRN/YEL	SG2 (SENSOR GROUND)	Sensor ground	Less than 1.0 V at all times
34	GRN/YEL	VTS1 (ROCKER ARM OIL CONTROL SOLENOID 1)	Drives rocker arm oil control solenoid 1	At idle: about 0 V
35	GRN/WHT	DNLS+ (CVT DRIVEN PULLEY PRESSURE CONTROL VALVE +SIDE)	Drives CVT driven pulley pressure control valve	With ignition switch ON (II): pulses
36	BLK	PG1 (POWER GROUND)	Ground circuit for PCM	Less than 1.0 V at all times
40	BLK	CVTPG1 (POWER GROUND)	Ground circuit for PCM	Less than 1.0 V at all times
41	PNK/BLU	SCLS− (CVT START CLUTCH PRESSURE CONTROL VALVE −SIDE)	Drives CVT start clutch pressure control valve	With ignition switch ON (II): pulses
42	PNK/BLK	DNLS− (CVT DRIVEN PULLEY PRESSURE CONTROL VALVE −SIDE)	Drives CVT driven pulley pressure control valve	With ignition switch ON (II): pulses
43	GRN/YEL	DRLS− (CVT DRIVE PULLEY PRESSURE CONTROL VALVE −SIDE)	Drives CVT drive pulley pressure control valve	With ignition switch ON (II): pulses
44	BLU/WHT	DRLS+ (CVT DRIVE PULLEY PRESSURE CONTROL VALVE +SIDE)	Drives CVT drive pulley pressure control valve	With ignition switch ON (II): pulses

PCM Inputs and Outputs at Connector C (○) (44P)

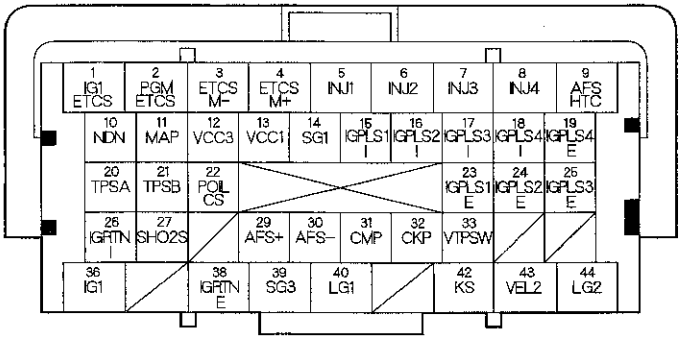

Terminal side of female terminals

NOTE: Standard battery voltage is about 12 V.

Terminal number	Wire color	Terminal name	Description	Signal
1	WHT/GRN	IG1ETCS (IGNITION SIGNAL ETCS)	Detects ignition signal	With ignition switch ON (II): battery voltage
2	BRN	PGMETCS (POWER GROUND ETCS)	Ground circuit for PCM	Less than 1.0 V at all times
3	YEL	ETCSM− (THROTTLE ACTUATOR −SIDE)	Ground for throttle actuator	With ignition switch ON (II): about 0 V
4	YEL/RED	ETCSM+ (THROTTLE ACTUATOR +SIDE)	Drives throttle actuator	With ignition switch ON (II): about 0 V
5	BRN	INJ1 (No. 1 INJECTOR)	Drives No. 1 injector	At idle: duty controlled With ignition switch ON (II): battery voltage
6	RED	INJ2 (No. 2 INJECTOR)	Drives No. 2 injector	
7	BLU	INJ3 (No. 3 INJECTOR)	Drives No. 3 injector	
8	YEL	INJ4 (No. 4 INJECTOR)	Drives No. 4 injector	
9	BLK/WHT	AFSHTC (AIR FUEL RATIO (A/F) SENSOR HEATER CONTROL (SENSOR 1))	Drives A/F sensor heater (sensor 1)	With ignition switch ON (II): battery voltage With warmed up engine running: about 0 V
10	WHT	NDN (CVT OUTPUT SHAFT DRIVEN PULLEY) SPEED SENSOR)	Detects CVT output shaft (driven pulley) speed sensor signal	In any position other than P or N: pulses
11	GRN/RED	MAP (MANIFOLD ABSOLUTE PRESSURE (MAP) SENSOR)	Detects MAP sensor signal	With ignition switch ON (II): about 3.0 V At idle: about 1.0 V (depending on engine speed)
12	GRN	VCC3 (SENSOR VOLTAGE)	Provides sensor reference voltage	With ignition switch ON (II): about 5.0 V
13	YEL/RED	VCC1 (SENSOR VOLTAGE)	Provides sensor reference voltage	With ignition switch ON (II): about 5.0 V
14	GRN/WHT	SG1 (SENSOR GROUND)	Sensor ground	Less than 1.0 V at all times
15	YEL/GRN	IGPLS1I (No. 1 INTAKE SIDE IGNITION COIL PULSE)	Drives No. 1 intake side ignition coil	With ignition switch ON (II): about 0 V With engine running: pulses
16	BLU/RED	IGPLS2I (No. 2 INTAKE SIDE IGNITION COIL PULSE)	Drives No. 2 intake side ignition coil	
17	BLK/RED	IGPLS3I (No. 3 INTAKE SIDE IGNITION COIL PULSE)	Drives No. 3 intake side ignition coil	
18	WHT/RED	IGPLS4I (No. 4 INTAKE SIDE IGNITION COIL PULSE)	Drives No. 4 intake side ignition coil	
19	WHT/BLU	IGPLS4E (No. 4 EXHAUST SIDE IGNITION COIL PULSE)	Drives No. 4 exhaust side ignition coil	
20	RED/BLK	TPSA (THROTTLE POSITION (TP) SENSOR A)	Detects TP sensor A signal	With throttle fully open: about 3.9 V With throttle fully closed: about 0.9 V
21	RED/BLU	TPSB (THROTTLE POSITION (TP) SENSOR B)	Detects TP sensor B signal	With throttle fully open: about 4.1 V With throttle fully closed: about 1.7V

(cont'd)

System Description (cont'd)

PCM Inputs and Outputs at Connector C (○) (44P)

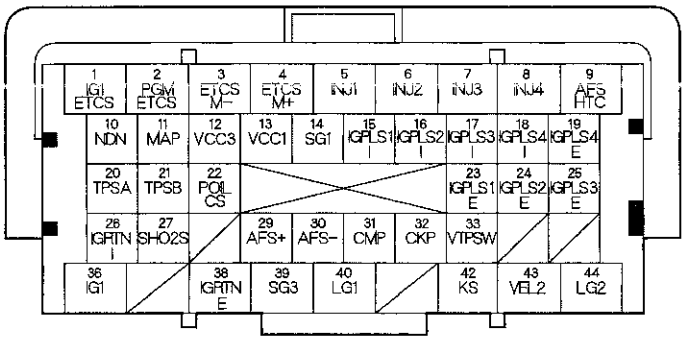

Terminal side of female terminals

NOTE: Standard battery voltage is about 12 V.

Terminal number	Wire color	Terminal name	Description	Signal
22	WHT/BLK	POILCS (ROCKER ARM OIL PRESSURE SENSOR)	Detects rocker arm oil pressure sensor signal	With ignition switch ON (II): about 0.5 V With engine running: about 0.7 V (depending on engine oil pressure)
23	WHT	IGPLS1E (No. 1 EXHAUST SIDE IGNITION COIL PULSE)	Drives No. 1 exhaust side ignition coil	With ignition switch ON (II): about 0 V With engine running: pulses
24	WHT/GRN	IGPLS2E (No. 2 EXHAUST SIDE IGNITION COIL PULSE)	Drives No. 2 exhaust side ignition coil	
25	WHT/BLK	IGPLS3E (No. 3 EXHAUST SIDE IGNITION COIL PULSE)	Drives No. 3 exhaust side ignition coil	
26	BLK/WHT	IGRTNI (INTAKE SIDE IGNITION COIL RETURN SIGNAL)	Detects intake side ignition coil power source	With ignition switch ON (II): battery voltage
27	WHT/RED	SHO2S (SECONDARY HEATED OXYGEN SENSOR (SECONDARY HO2S) (SENSOR 2))	Detects secondary HO2S (sensor 2) signal	With throttle fully opened from idle with warmed up engine: about 0.6 V With throttle quickly closed: below 0.4 V
29	GRN	AFS+ (AIR FUEL RATIO (A/F) SENSOR (SENSOR 1) +SIDE)	Detects A/F sensor (sensor 1) signal	
30	RED	AFS− (AIR FUEL RATIO (A/F) SENSOR (SENSOR 1) −SIDE)	Detects A/F sensor (sensor 1) signal	
31	GRN	CMP (CAMSHAFT POSITION (CMP) SENSOR)	Detects CMP sensor signal	With engine running: pulses
32	BLU	CKP (CRANKSHAFT POSITION (CKP) SENSOR)	Detects CKP sensor signal	With engine running: pulses
33	BLU/BLK	VTPSW (ROCKER ARM OIL PRESSURE SWITCH)	Detects rocker arm oil pressure switch signal	At idle: about 0 V
36	BLK/YEL	IG1 (IGNITION SIGNAL)	Detects ignition signal	With ignition switch ON (II): battery voltage
38	YEL	IGRTNE (EXHAUST SIDE IGNITION COIL RETURN SIGNAL)	Detects exhaust side ignition coil power source	With ignition switch ON (II): battery voltage
39	BLU	SG3 (SENSOR GROUND)	Sensor ground	Less than 1.0 V at all times
40	BRN/YEL	LG1 (LOGIC GROUND)	Ground circuit for PCM	Less than 1.0 V at all times
42	RED/BLU	KS (KNOCK SENSOR)	Detects knock sensor signal	With engine knocking: pulses
43	WHT/RED	VEL1 (CVT SPEED SENSOR)	Detects CVT speed sensor	Depending on vehicle speed: pulses When vehicle is stopped: about 0 V
44	BRN/YEL	LG2 (LOGIC GROUND)	Ground circuit for PCM	Less than 1.0 V at all times

PGM-FI System

The programmed fuel injection (PGM-FI) system is a sequential multiport fuel injection system.

Air Conditioning (A/C) Compressor Clutch Relay
When the PCM receives a demand for cooling from the A/C system, it delays the compressor from being energized, and enriches the mixture to assure smooth transition to the A/C mode.

Air Fuel Ratio (A/F) Sensor
The A/F sensor operates over a wide air/fuel range. The A/F sensor is installed upstream of the WU-TWC, and sends signals to the PCM which varies the duration of fuel injection accordingly.

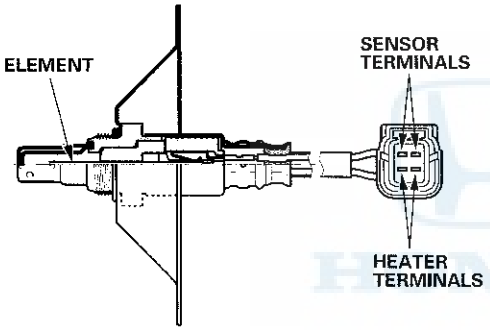

Barometric Pressure (BARO) Sensor
The BARO sensor is inside the PCM. It converts atmospheric pressure into a voltage signal that modifies the basic duration of the fuel injection discharge.

Camshaft Position (CMP) Sensor
The CMP sensor detects the position of the No. 1 cylinder as a reference for sequential fuel injection to each cylinder.

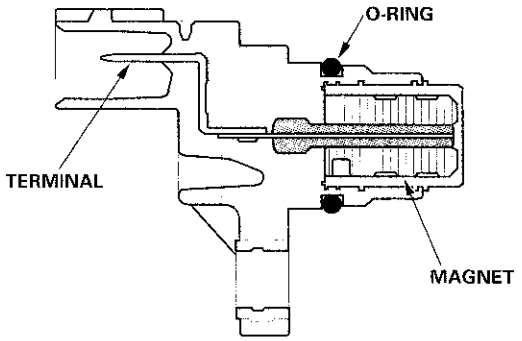

Crankshaft Position (CKP) Sensor
The CKP sensor detects crankshaft speed and is used by the PCM to determine ignition timing and timing for fuel injection of each cylinder and engine misfire detection.

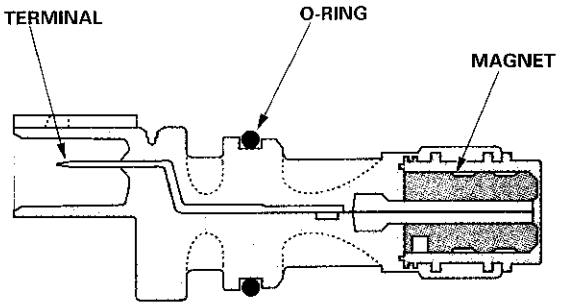

CVT Output Shaft (Driven pulley) Speed Sensor
This sensor detects driven pulley speed.

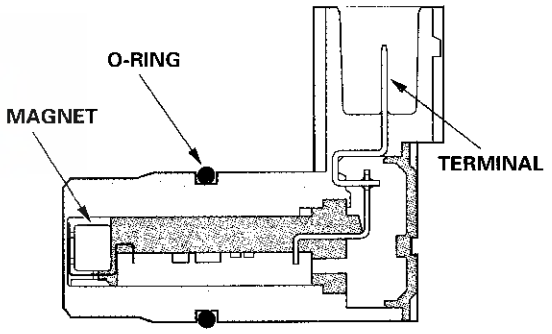

Engine Coolant Temperature (ECT) Sensor 1 and 2
ECT sensors 1 and 2 are temperature dependent resistors (thermistors). The resistance decreases as the engine coolant temperature increases.

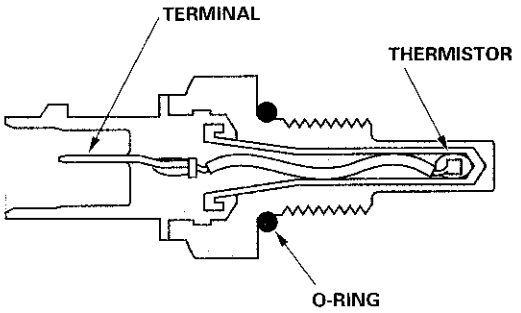

(cont'd)

System Description (cont'd)

Ignition Timing Control
The PCM contains the memory for basic ignition timing at various engine speeds and manifold absolute pressure. It also adjusts the timing according to engine coolant temperature and intake air temperature.

Injector Timing and Duration
The PCM contains the memory for basic discharge duration at various engine speeds and manifold pressures. The basic discharge duration, after being read out from the memory, is further modified by signals sent from various sensors to obtain the final discharge duration.
By monitoring long term fuel trim, the PCM detects long term malfunctions in the fuel system and sets a diagnostic trouble codes (DTCs) if needed.

Knock Sensor
The knock control system adjusts the ignition timing to minimize knock.

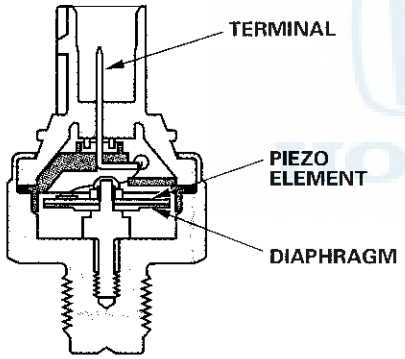

Manifold Absolute Pressure (MAP) Sensor
The MAP sensor converts manifold absolute pressure into electrical signals to the PCM.

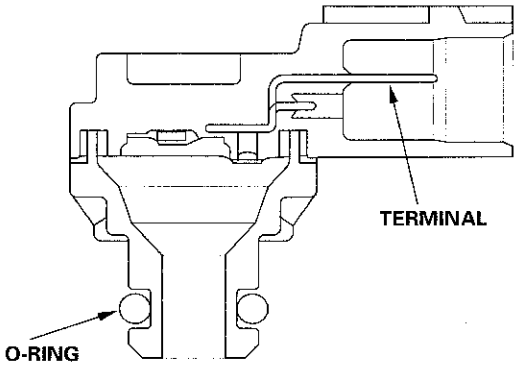

Malfunction Indicator Lamp (MIL) Indication (In relation to Readiness Codes)
The vehicle has certain readiness codes that are part of the on-board diagnostics for the emissions systems. If the vehicle's battery has been disconnected or gone dead, if the DTCs have been cleared, or if the PCM has been reset, these codes are reset. In some states, part of the emissions testing is to make sure these codes are set to complete. If all of them are not set to complete, the vehicle may fail the test, or the test cannot be finished.

To check if the readiness codes are set to complete, turn the ignition switch to ON (II), but do not start the engine. The MIL will come on for 15—20 seconds. If it then goes off, the readiness codes are complete. If it flashes five times, one or more readiness codes are not complete. To set each code, drive the vehicle or run the engine as described in the procedures (see page 11-56).

Mass Air Flow (MAF) Sensor/Intake Air Temperature (IAT) Sensor
The mass air flow (MAF) sensor/intake air temperature (IAT) sensor contains a hot wire and a thermistor. It is located in the intake air passage. The resistance of the hot wire and thermistor changes due to intake air temperature and air flow. The control circuit in the MAF sensor controls the current to keep the hot wire at a set temperature. The current is converted to voltage in the control circuit, then output to the PCM.

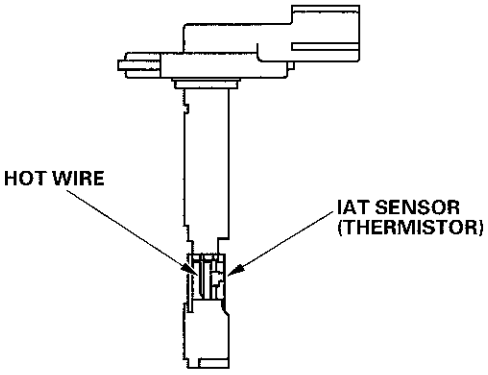

Secondary Heated Oxygen Sensor (Secondary HO2S)
The secondary HO2S detects the oxygen content in the exhaust gas downstream of the warm up three way catalytic converter (WU-TWC), and sends signals to the PCM which varies the duration of fuel injection accordingly. To stabilize its output, the sensor has an internal heater. The PCM compares the HO2S output with the A/F sensor output to determine catalyst efficiency. The secondary HO2S is located on the WU-TWC.

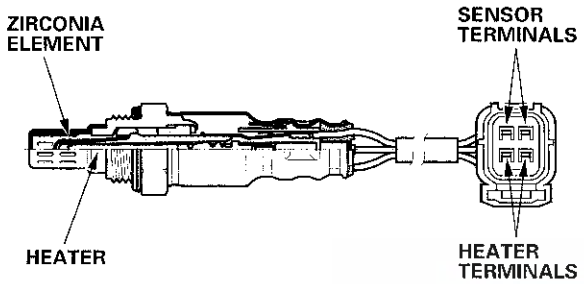

Electronic Throttle Control System

The throttle is electronically controlled by the electronic throttle control system. Refer to the system diagram to see a functional layout of the system.

Idle control: When the engine is idling, the PCM controls the throttle actuator to maintain the proper idle speed according to engine loads.

Acceleration control: When the accelerator pedal is pressed, the PCM opens the throttle valve depending on the accelerator pedal position (APP) sensor signal.

Cruise control: The PCM controls the throttle actuator to maintain set speed when the cruise control is operating. The throttle actuator takes the place of the cruise control actuator.

Accelerator Pedal Position (APP) Sensor
As the accelerator pedal position changes, the sensor varies the signal voltage to the PCM.

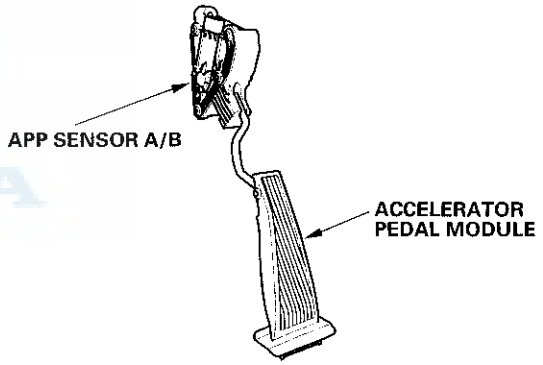

(cont'd)

System Description (cont'd)

Throttle Body
The throttle body is a single-barrel side draft type. The lower portion of the throttle valve is heated by engine coolant from the cylinder head to prevent icing of the throttle plate.

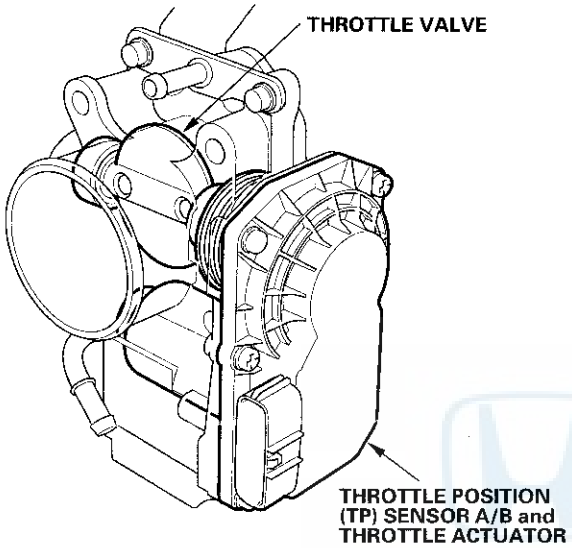

Idle Control System

When the engine is cold, the A/C compressor is on, the transmission is in gear, the brake pedal is pressed, the power steering load is high, or the alternator is charging, the PCM sends signals to the throttle position to maintain the correct idle speed.

Brake Pedal Position Switch
The brake pedal position switch signals the PCM when the brake pedal is pressed.

Electrical Power Steering (EPS) Signal
The EPS signals the PCM when the power steering load is high.

Fuel Supply System

Fuel Cutoff Control
During deceleration with the throttle valve closed, current to the injectors is cut off to improve fuel economy at engine speeds over 1,100 rpm. Fuel cutoff also occurs when the engine speed exceeds 6,500 rpm, regardless of the position of the throttle valve, to protect the engine from over-revving. When the vehicle is stopped, the PCM cuts the fuel at engine speeds over 4,500 rpm. On a cold engine, fuel cut occurs at a lower engine speed.

Fuel Pump Control
When the ignition is turned to ON (II), the PCM grounds PGM-FI main relay 2 which feeds current to the fuel pump for 2 seconds to pressurize the fuel system. With the engine running, the PCM grounds PGM-FI main relay 2 and feeds current to the fuel pump. When the engine is not running and the ignition is on, the PCM cuts ground to PGM-FI main relay 2 which cuts current to the fuel pump.

PGM-FI Main Relay 1 and 2
PGM-FI main relay 1 is energized whenever the ignition switch is ON (II) to supply battery voltage to the PCM, power to the injectors, and power for PGM-FI main relay 2. PGM-FI main relay 2 is energized to supply power to the fuel pump for 2 seconds when the ignition switch is turned to ON (II), and when the engine is cranking or running.

3 Stage i-VTEC System

The 3 stage i-VTEC system changes the intake valve lift (low lift, high lift, pause) and exhaust valve lift (normal lift, pause) characteristics to improve fuel economy and power output. There are two rocker arm oil control solenoids in this system to control the engine oil passage that leads to the intake and exhaust rocker arms and controls the intake and the exhaust valve lift. The engine oil pressure is monitored with the rocker arm oil pressure sensor and the rocker arm oil pressure switch.

Operating Condition

Vehicle stop mode (Idle stop)
The engine stops idling if the IMA battery is sufficiently charged.
Start running mode (Engine and IMA motor)
The engine runs on the low lift cam. The IMA motor increases torque.
Slow acceleration mode (Engine only)
The engine runs on the low lift cam. The IMA motor does not assist.
Low speed cruise mode (IMA motor only)
The IMA motor runs the vehicle by itself if the IMA battery is sufficiently charged. The intake and exhaust valves pause to reduce valve spring compression and pumping loss.
Acceleration from low speed mode (Engine and IMA motor)
The engine runs on the low lift cam. The IMA motor increases torque.
High acceleration from low speed mode (Engine and IMA motor)
The engine runs on the high lift cam. The IMA motor increases torque.
High speed cruise mode (Engine only)
The engine runs on the low lift cam. The IMA motor does not assist.
Deceleration mode (IMA battery charge)
The intake and exhaust valves pause and reduce engine braking force. The IMA motor simulates engine braking force by regenerative charging of the IMA battery.

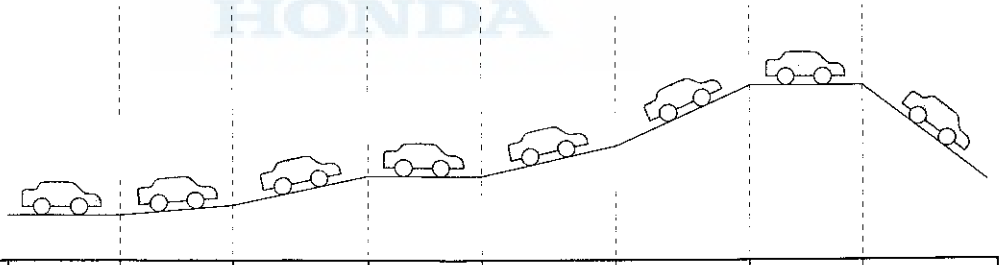

Drive pattern	Stop	Start running	Slow acceleration	Low speed cruise	Acceleration	High acceleration	High speed cruise	Deceleration
Engine	Idle stop	Low lift	Low lift	Valve pause	Low lift	High lift	Low lift	Valve pause
IMA Motor	Stop	Assist	Stop	Motor only	Assist	Assist	Stop	Charge
Assist amount (Gauge)	ASST CHRG	ASST CHRG	ASST CHRG	ASST CHRG	ASST CHRG	ASST CHRG	ASST CHRG	ASST CHRG

(cont'd)

System Description (cont'd)

System Operation

Low Lift Operation
Rocker arm oil control solenoids 1 and 2 are both OFF. Engine oil pressure from the oil pump is lead to OUT 1 and pushes piston A (inside the intake rocker arm No. 1 and No. 2) to the right side. This makes intake rocker arms No. 1 and No. 2 unified and the intake valve will lift with the low camshaft specification.
High Lift Operation
Rocker arm oil control solenoid 1 is ON, and rocker arm oil control solenoid 2 is OFF. The engine oil pressure from the oil pump is lead to OUT 2 and pushes piston B (inside the intake rocker arm No. 2 and No. 3) to the left side. This makes intake rocker arms No. 2 and No. 3 unified and the intake valve will lift with the high camshaft specification.
Valve pause operation
Rocker arm oil control solenoids 1 and 2 are both ON. The engine oil pressure from the oil pump is lead to OUT 3 and pushes piston A (inside the intake rocker arm No. 1 and No. 2) to the left side and piston C (inside the exhaust rocker arm No. 1 and No. 2) to the right side. This separates intake rocker arms No. 1 and No. 2 and exhaust rocker arms No. 1 and No. 2 causing the intake valve and the exhaust valve to stop.

	Rocker arm oil control solenoid 1	Rocker arm oil control solenoid 2	Rocker arm oil pressure sensor signal	Rocker arm oil pressure switch signal	Rocker arm activation (Rocker arm oil control valve oil pressure output)
Low valve lift mode	OFF	OFF	High	OFF	IN side rocker arm: Low lift EX side rocker arm: Normal lift (OUT 1)
High valve lift mode	ON	OFF	Low	ON	IN side rocker arm: High lift EX side rocker arm: Normal lift (OUT 2)
Valve pause mode	ON	ON	Low	OFF	IN side rocker arm: Pause EX side rocker arm: Pause (OUT 3)

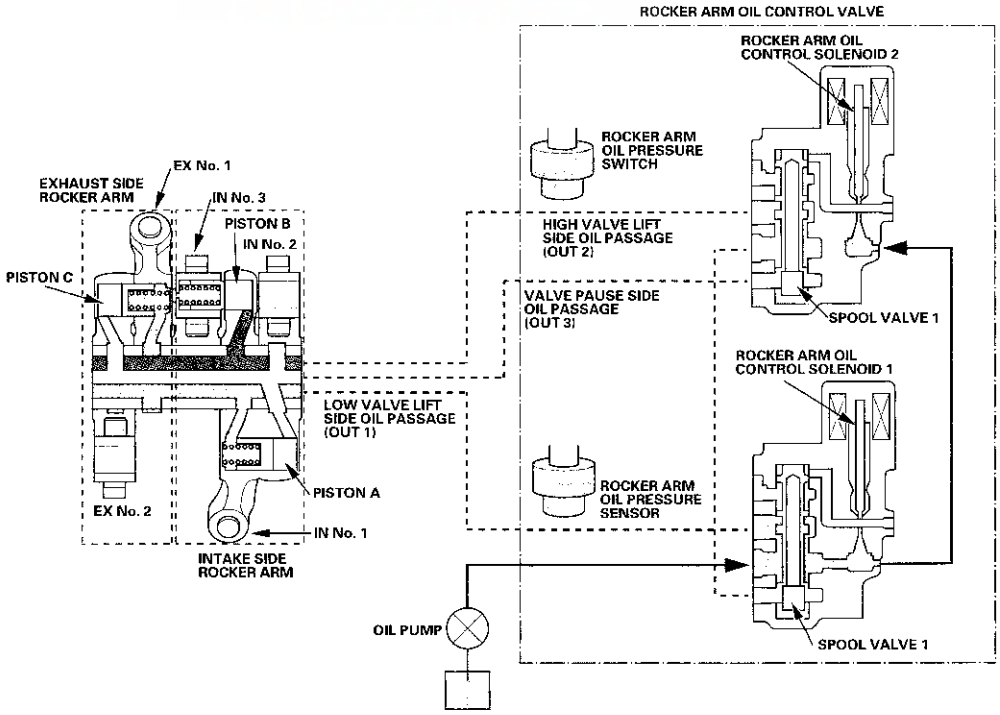

Catalytic Converter System

Warm Up Three Way Catalytic Converter (WU-TWC) and Under-floor Three Way Catalytic Converter (Under-floor TWC)
The WU-TWC/TWC converts hydrocarbons (HC), carbon monoxide (CO), and oxides of nitrogen (NOx) in the exhaust gas to carbon dioxide (CO_2), nitrogen (N_2), and water vapor.

WU-TWC (ATTACHED TO THE CYLINDER HEAD)

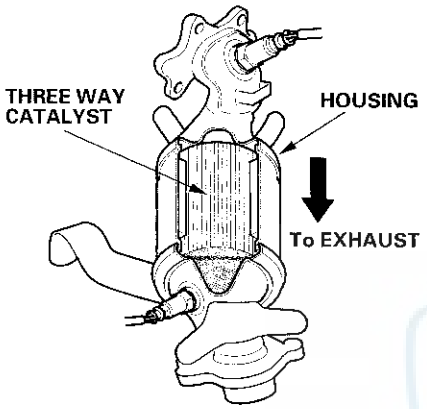

UNDER-FLOOR TWC

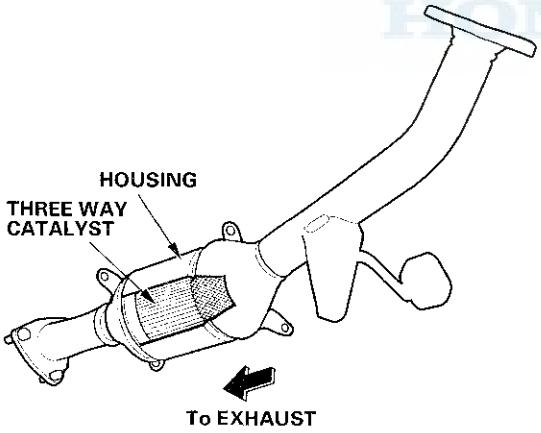

Positive Crankcase Ventilation (PCV) System

The PCV valve prevents blow-by gasses from escaping into the atmosphere by venting them into the intake manifold.

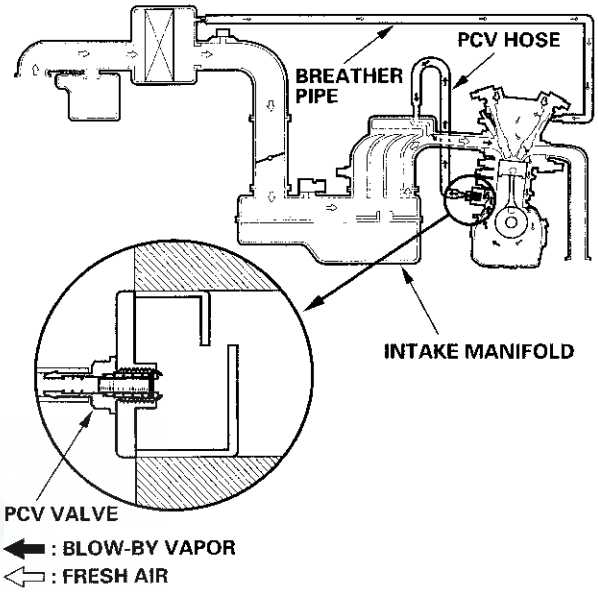

Exhaust Gas Recirculation (EGR) System

Refer to the system diagram to see a functional layout of the system.

EGR Valve
The EGR valve lowers peak combustion temperatures and reduces oxides of nitrogen emissions (NOx) by recirculating exhaust gas through the intake manifold and into the combustion chambers.

(cont'd)

System Description (cont'd)

Evaporative Emission (EVAP) Control System

Refer to the system diagram to see a functional layout of the system.

EVAP Canister
The EVAP canister temporarily stores fuel vapor from the fuel tank until it can be purged from the EVAP canister into the engine and burned.

EVAP Canister Purge Valve
When the engine coolant temperature is below 113 °F (45 °C), the PCM turns off the EVAP canister purge valve cutting vacuum to the EVAP canister.

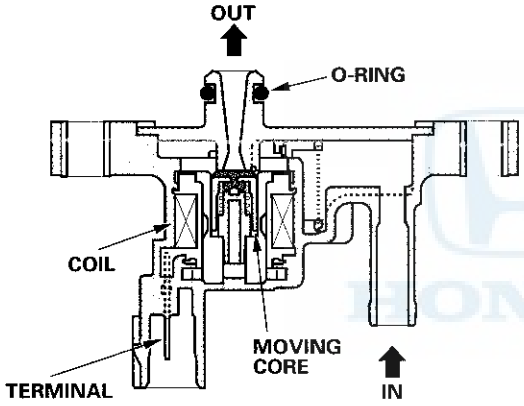

Fuel Tank Pressure (FTP) Sensor
The FTP sensor converts fuel tank absolute pressure into an electrical input to the PCM.

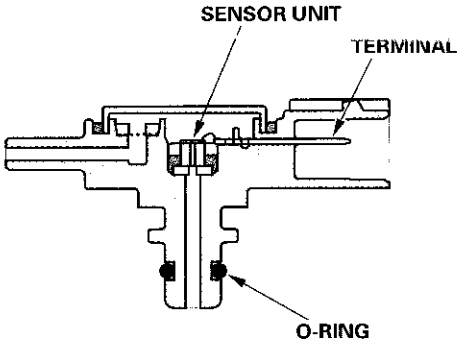

EVAP Canister Vent Shut Valve
The EVAP canister vent shut valve is on the EVAP canister.
The EVAP canister vent shut valve controls venting of the EVAP canister.

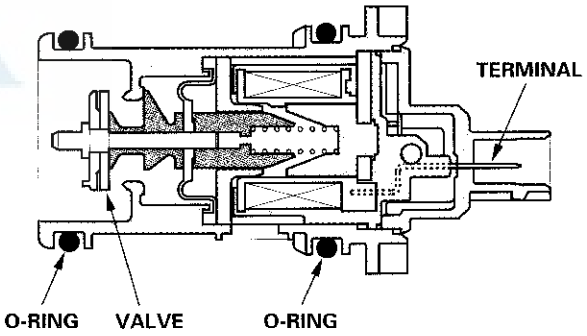

Fuel Cap Warning Message

The PCM detects a loose or missing fuel fill cap as an evaporative system leak, and alerts the driver by showing a warning message in the gauge display.

First drive cycle
The first time a leak is detected a CHECK FUEL CAP message appears in the gauge display (A). To scroll to another message, press the select/reset button. The CHECK FUEL CAP message appears each time you restart the engine until the system turns the message off. Turn the engine off then replace or tighten the fuel fill cap until it clicks at least once.

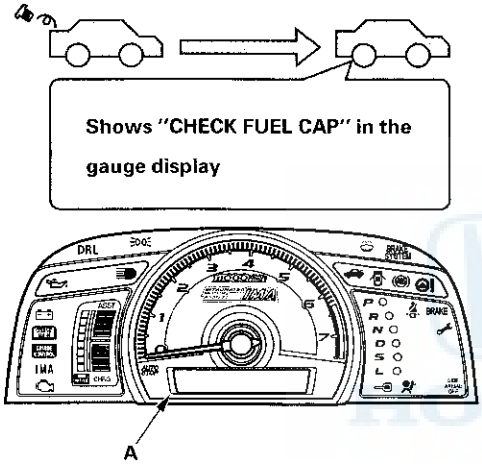

To make the message go off (With the HDS)

Procedure

1. Tighten the fuel fill cap until it clicks.
2. Clear the Temporary DTC with the HDS.
3. Verify there is no leak by doing the EVAP FUNCTION TEST in the INSPECTION MENU with the HDS.

To make the message go off (Without the HDS)

Procedure

1. Tighten the fuel fill cap until it clicks.
2. Start the engine, then turn the ignition switch to LOCK (0).
3. Repeat step 2 two more times.

(cont'd)

System Description (cont'd)

Electronic Throttle Control System Diagram

The electronic throttle control system consists of the throttle actuator, throttle position (TP) sensor A/B, accelerator pedal position (APP) sensor A/B, the electronic throttle control system (ETCS) control relay, and the PCM.

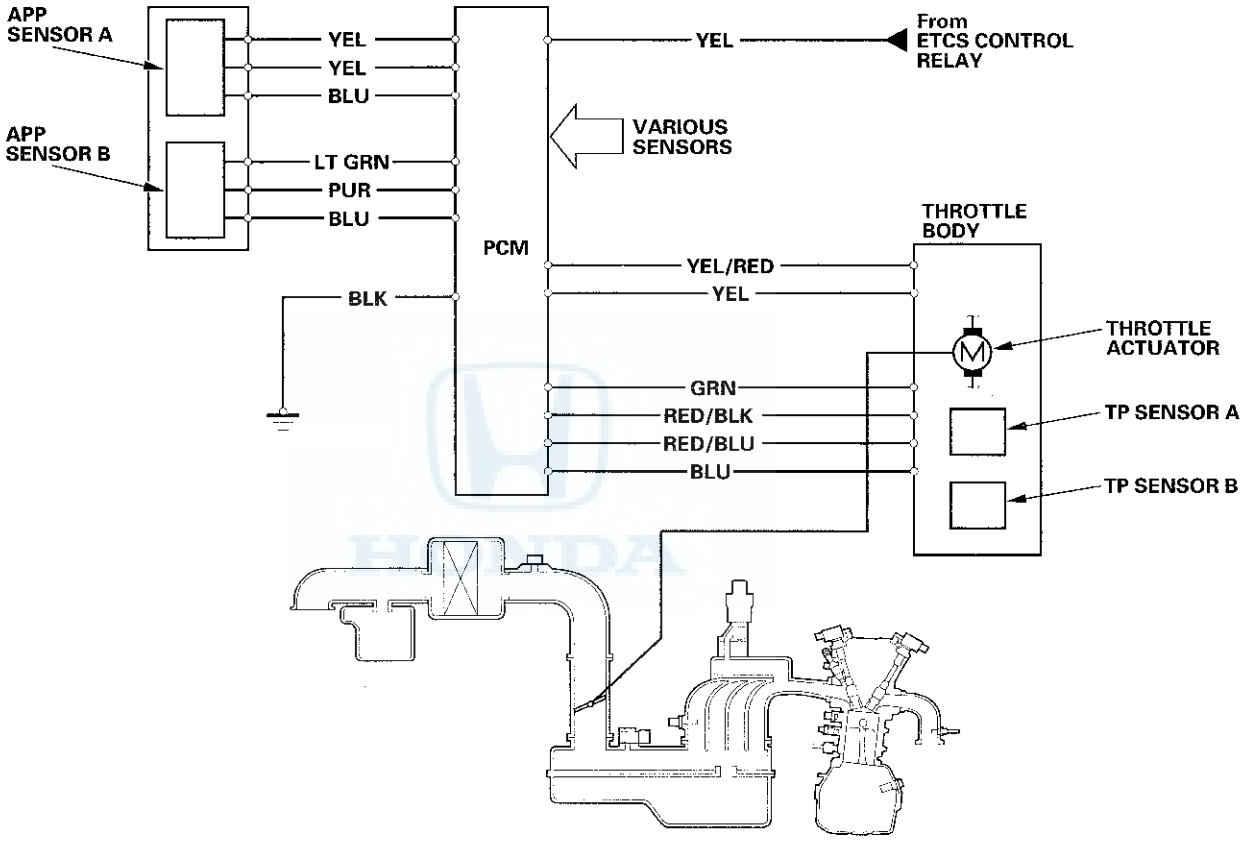

Exhaust Gas Recirculation (EGR) System Diagram

The EGR system reduces oxides of nitrogen (NOx) emissions by recirculating exhaust gas through the EGR valve and the intake manifold into the combustion chambers. The PCM memory contains the ideal EGR valve position for various operating conditions.

The EGR valve position sensor detects the amount of EGR valve lift, and sends it to the PCM. The PCM then compares it with the ideal lift in its memory (based on signals sent from other sensors). If there is any difference between the two, the PCM cuts current to the EGR valve.

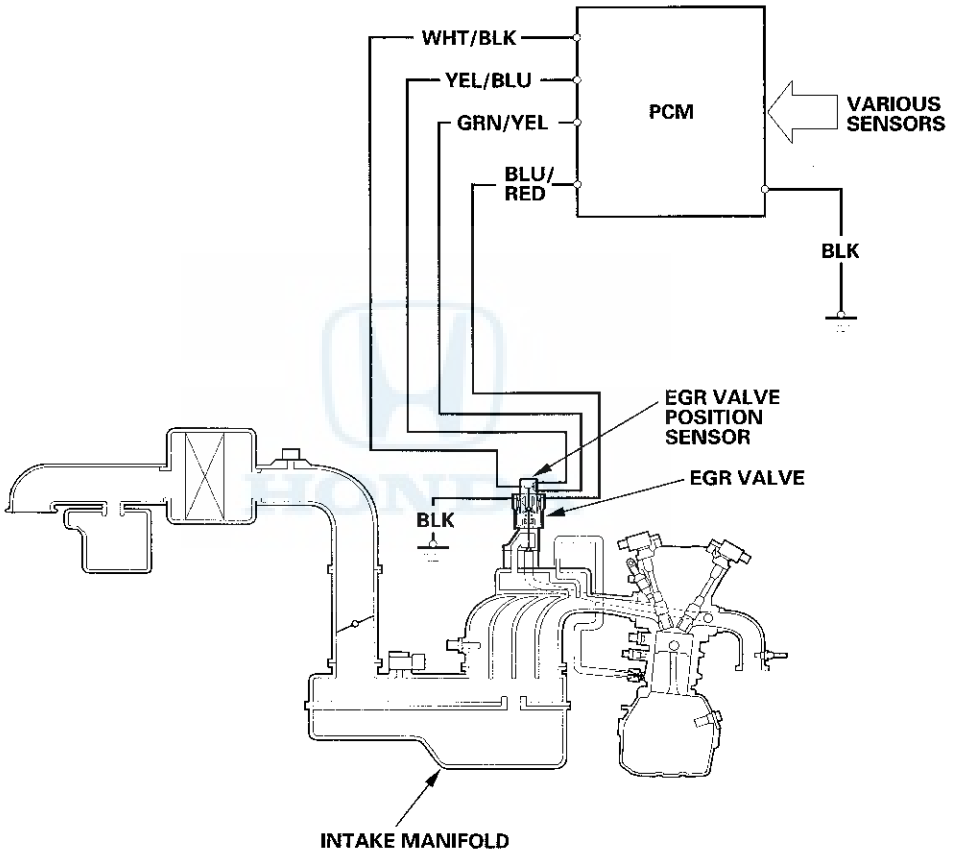

(cont'd)

System Description (cont'd)

Evaporative Emission (EVAP) Control Diagram

The EVAP controls minimize the amount of fuel vapor escaping to the atmosphere. Vapor from the fuel tank is temporarily stored in the EVAP canister until it can be purged from the canister into the engine and burned.

The EVAP canister is purged by drawing fresh air through it and into a port on the intake manifold.
The purging vacuum is controlled by the EVAP canister purge valve, which operates whenever engine coolant temperature is above 113 °F (45 °C).

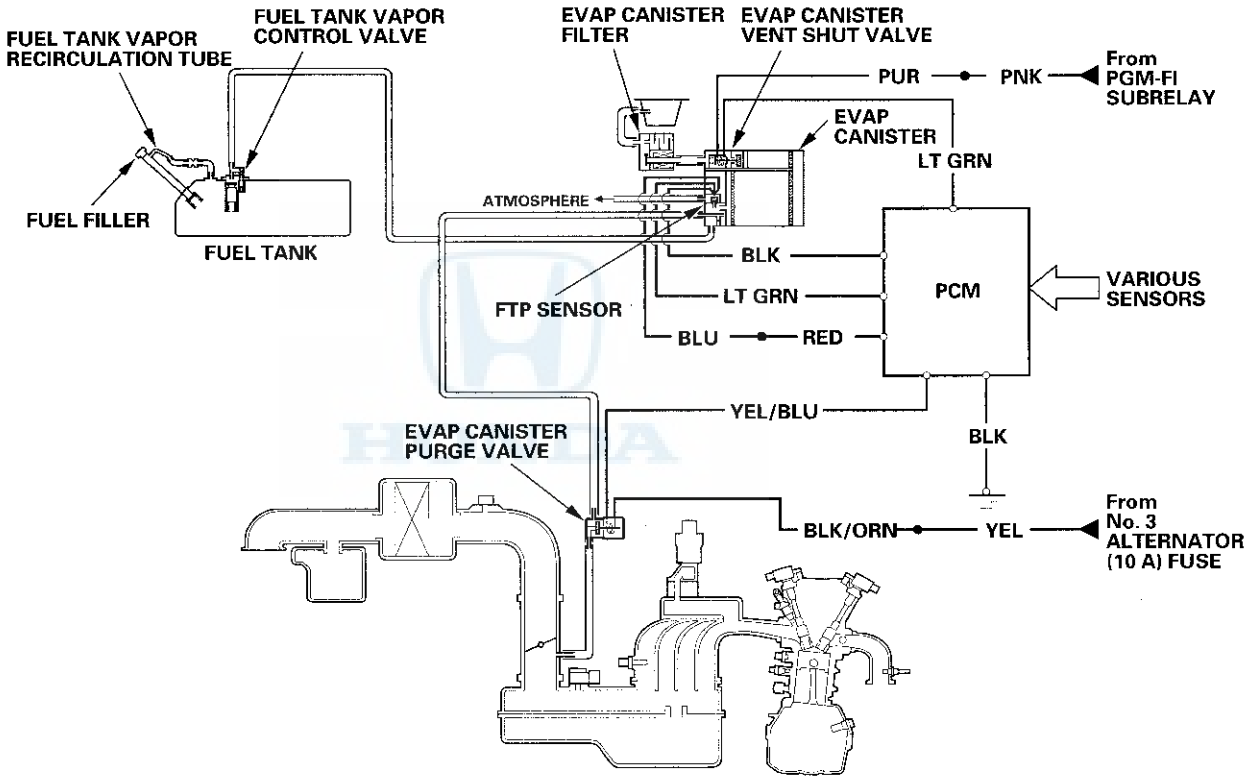

PCM Circuit Diagram

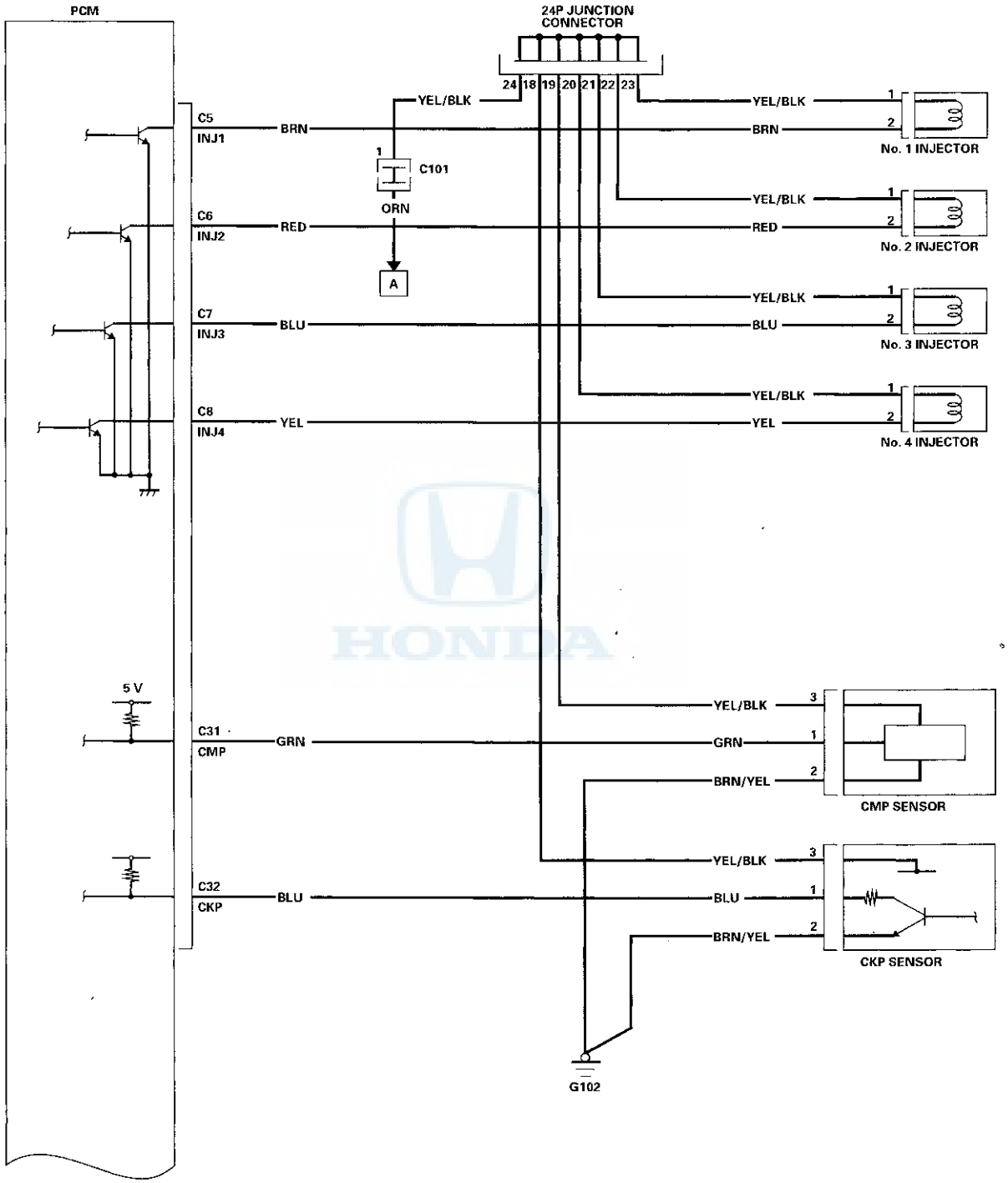

(cont'd)

System Description (cont'd)

PCM Circuit Diagram (cont'd)

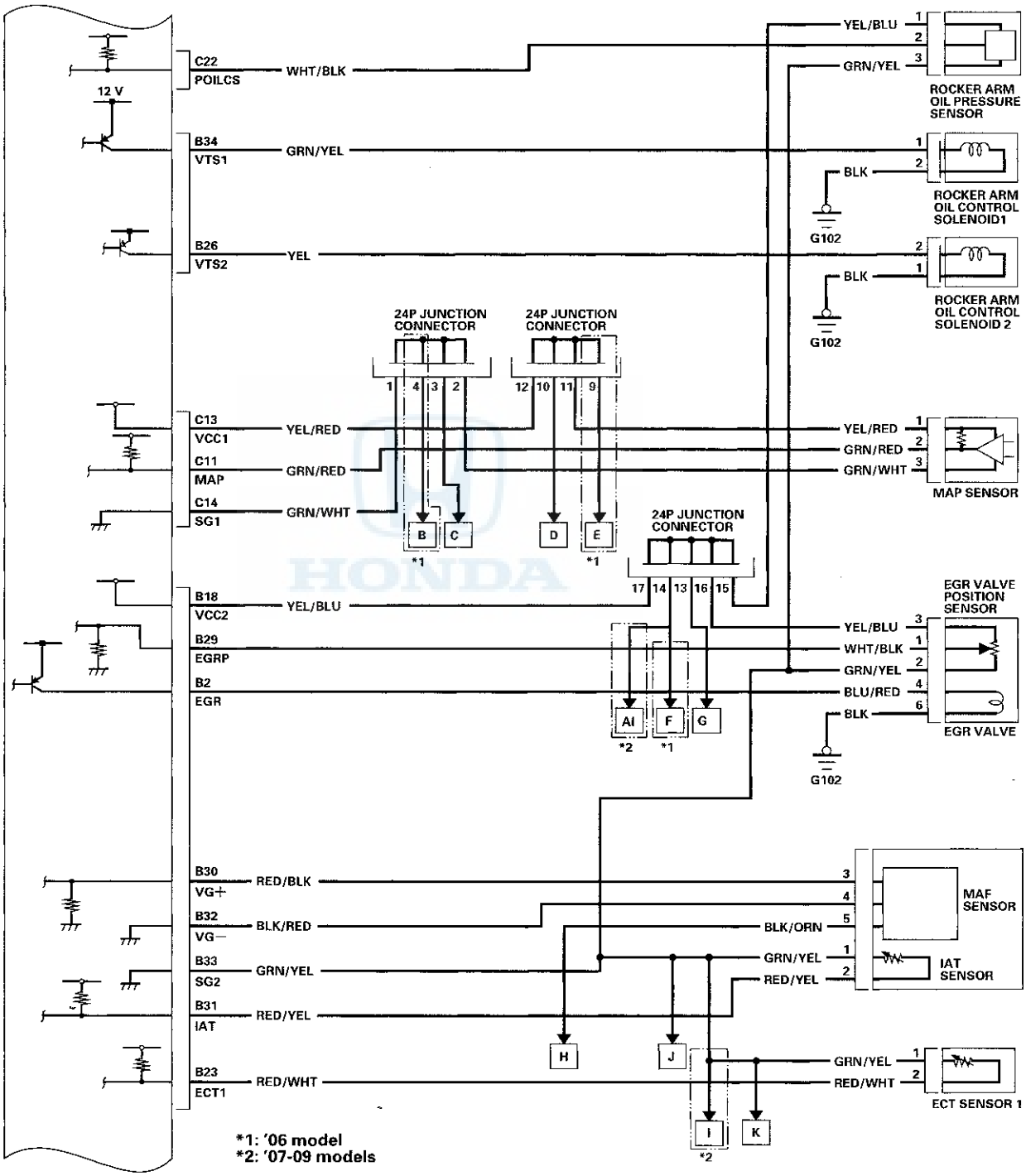

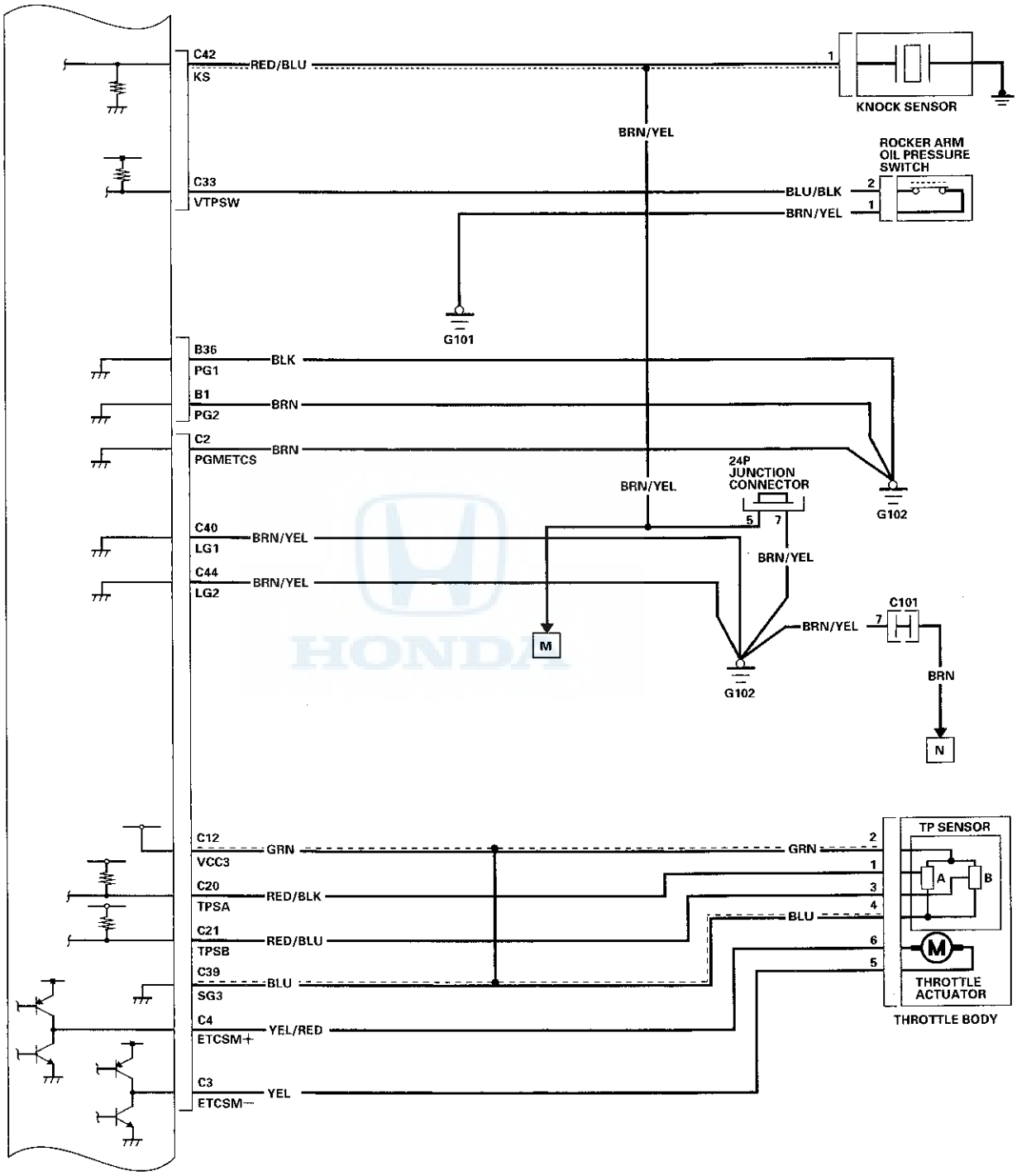
C42
KS
RED/BLU
1
KNOCK SENSOR
BRN/YEL
ROCKER ARM OIL PRESSURE SWITCH
C33
VTPSW
BLU/BLK
2
BRN/YEL
1
G101
B36
PG1
BLK
B1
PG2
BRN
C2
PGMETCS
BRN
24P JUNCTION CONNECTOR
BRN/YEL
G102
C40
LG1
BRN/YEL
5
7
BRN/YEL
C44
LG2
BRN/YEL
C101
7
BRN/YEL
M
G102
BRN
N
C12
VCC3
GRN
GRN
2
TP SENSOR
A
B
C20
TPSA
RED/BLK
1
3
4
BLU
C21
TPSB
RED/BLU
6
M
C39
SG3
BLU
5
THROTTLE ACTUATOR
THROTTLE BODY
C4
ETCSM+
YEL/RED
C3
ETCSM−
YEL

(cont'd)

System Description (cont'd)

PCM Circuit Diagram (cont'd)

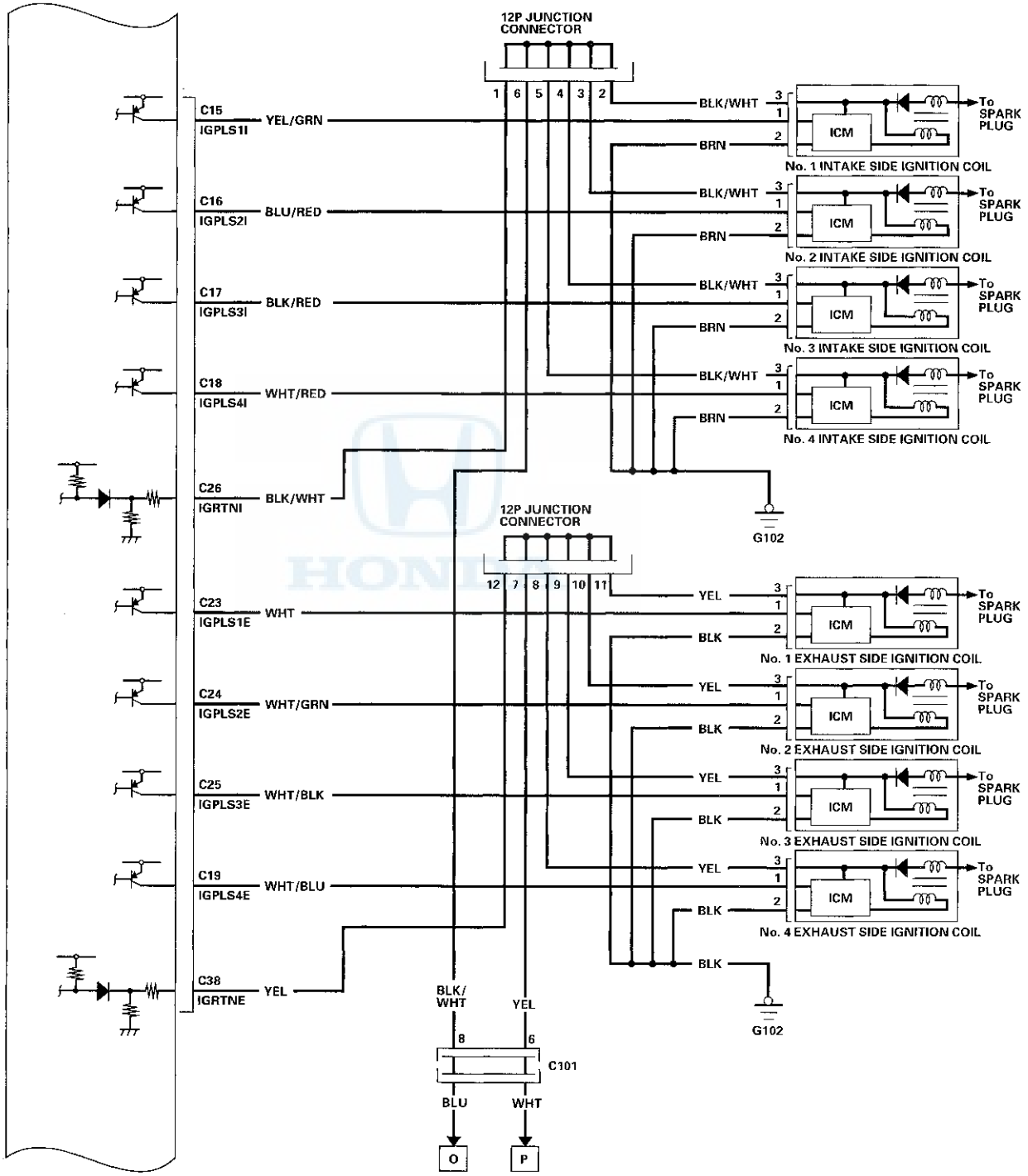

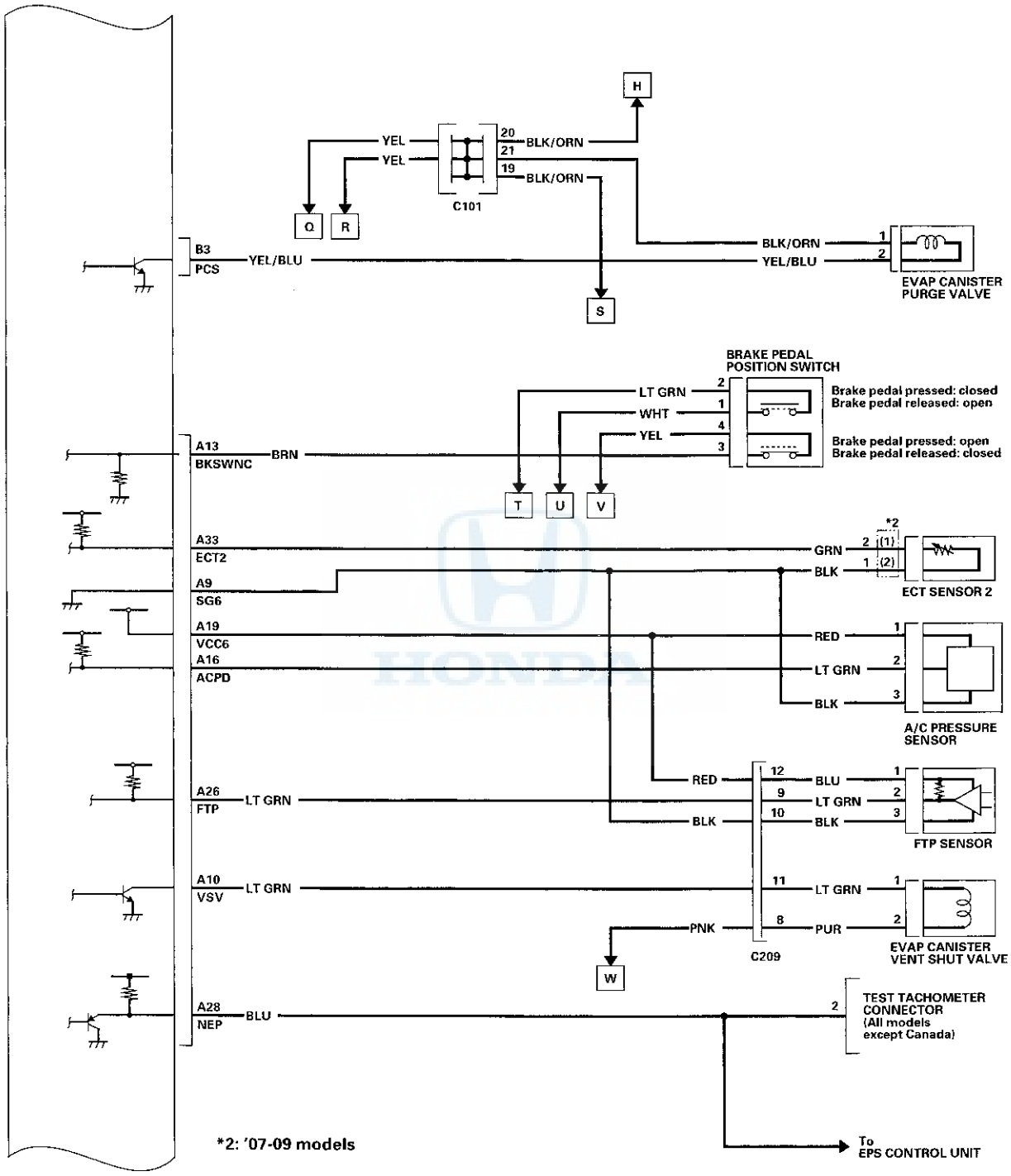

*2: '07-09 models

(cont'd)

System Description (cont'd)

PCM Circuit Diagram (cont'd)

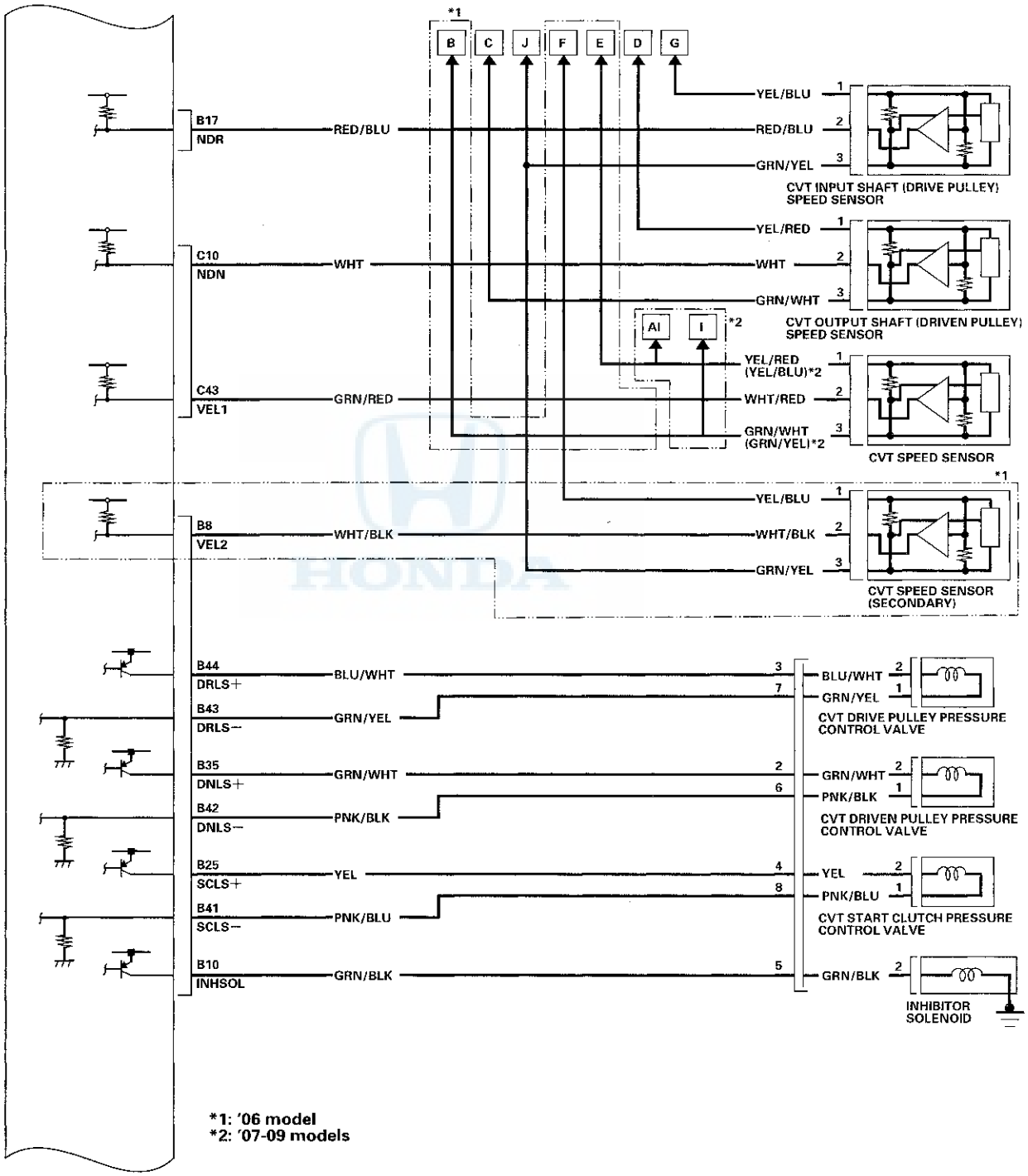

*1: '06 model
*2: '07-09 models

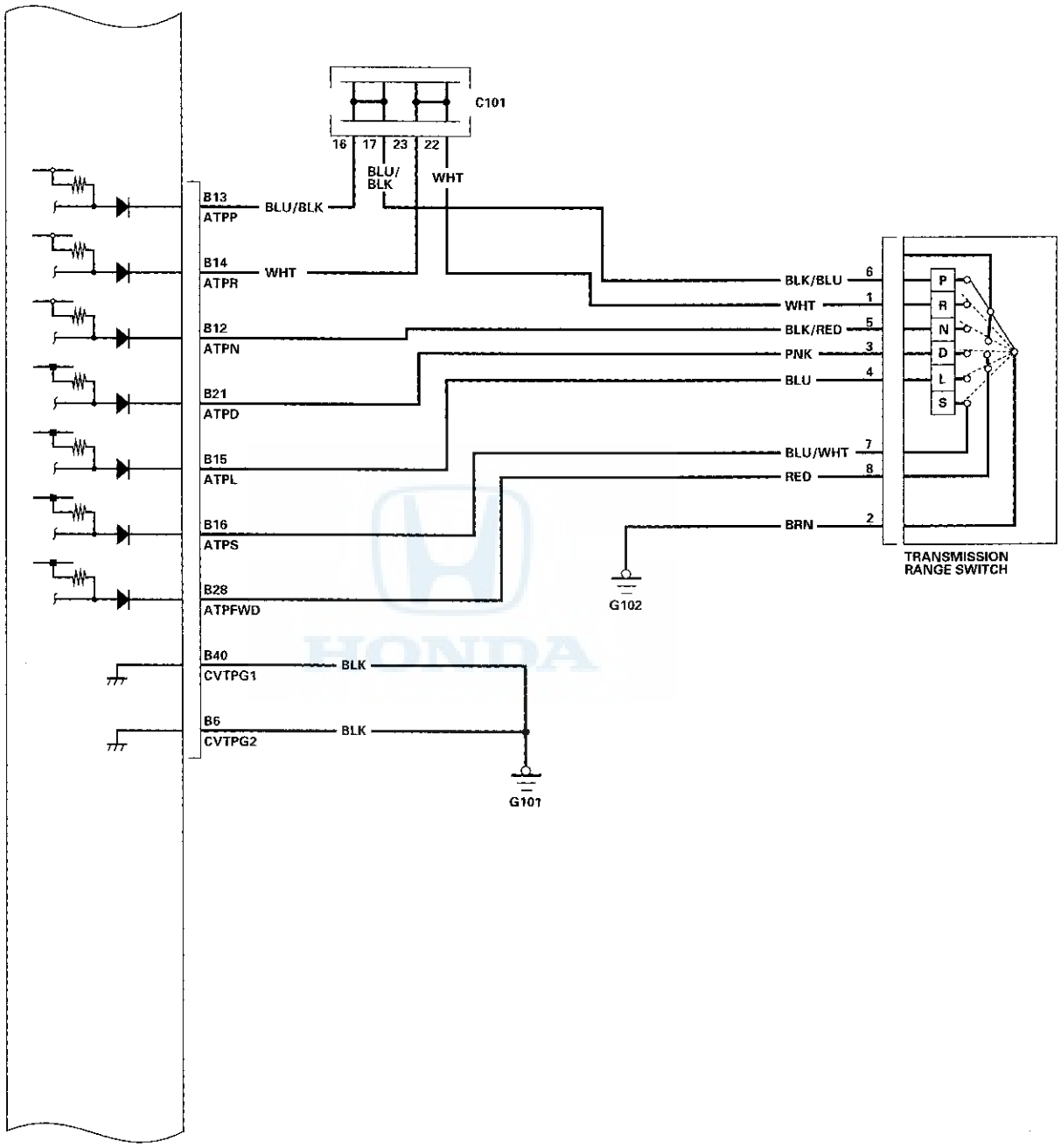
C101
16
17
23
22
BLU/
BLK
WHT
B13
ATPP
BLU/BLK
B14
ATPR
WHT
B12
ATPN
B21
ATPD
B15
ATPL
B16
ATPS
B28
ATPFWD
B40
CVTPG1
BLK
B6
CVTPG2
BLK
G101
BLK/BLU
WHT
BLK/RED
PNK
BLU
BLU/WHT
RED
BRN
6
1
5
3
4
7
8
2
P
R
N
D
L
S
G102
TRANSMISSION
RANGE SWITCH

(cont'd)

System Description (cont'd)

PCM Circuit Diagram (cont'd)

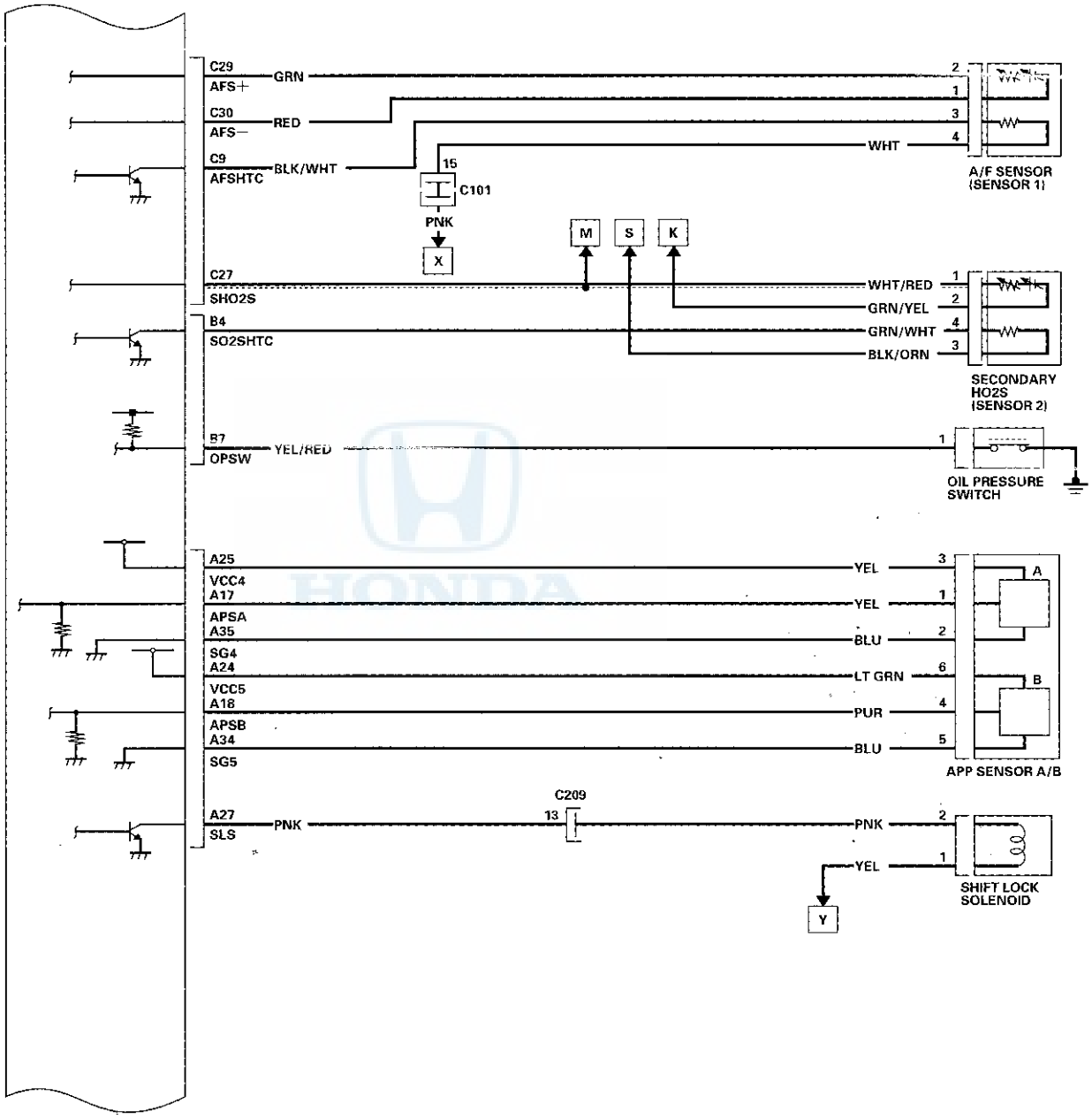

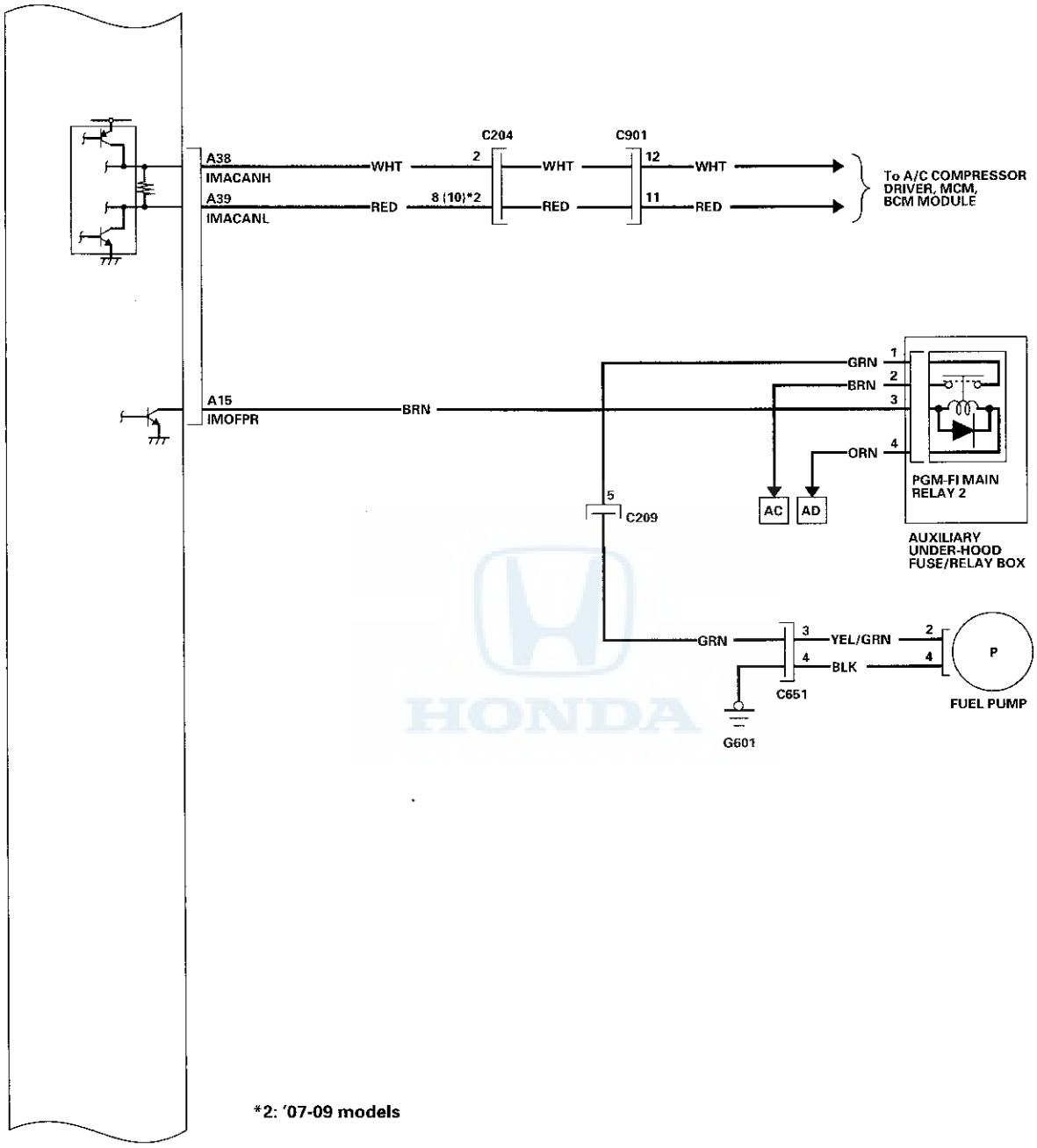

*2: '07-09 models

(cont'd)

System Description (cont'd)

PCM Circuit Diagram (cont'd)

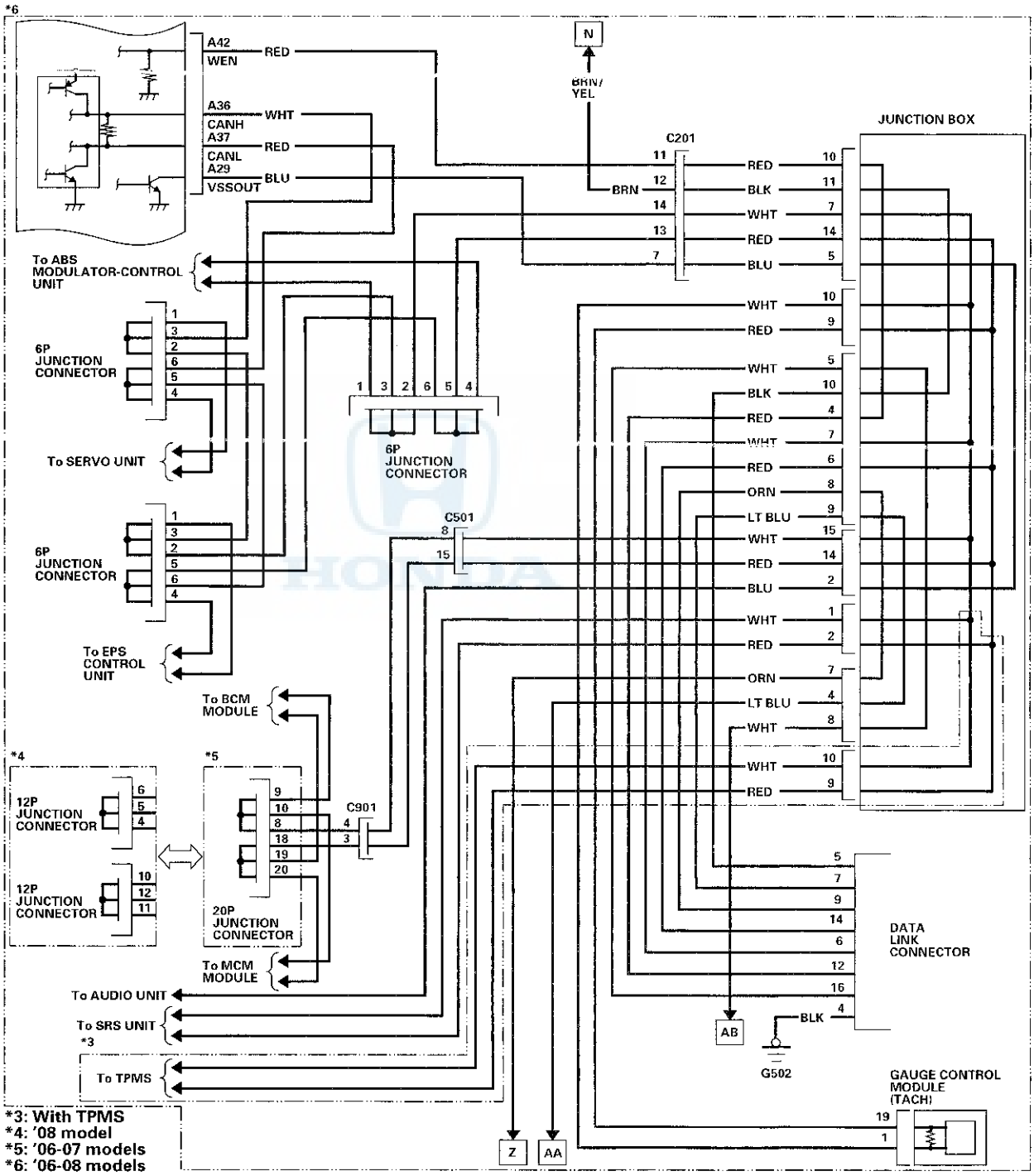

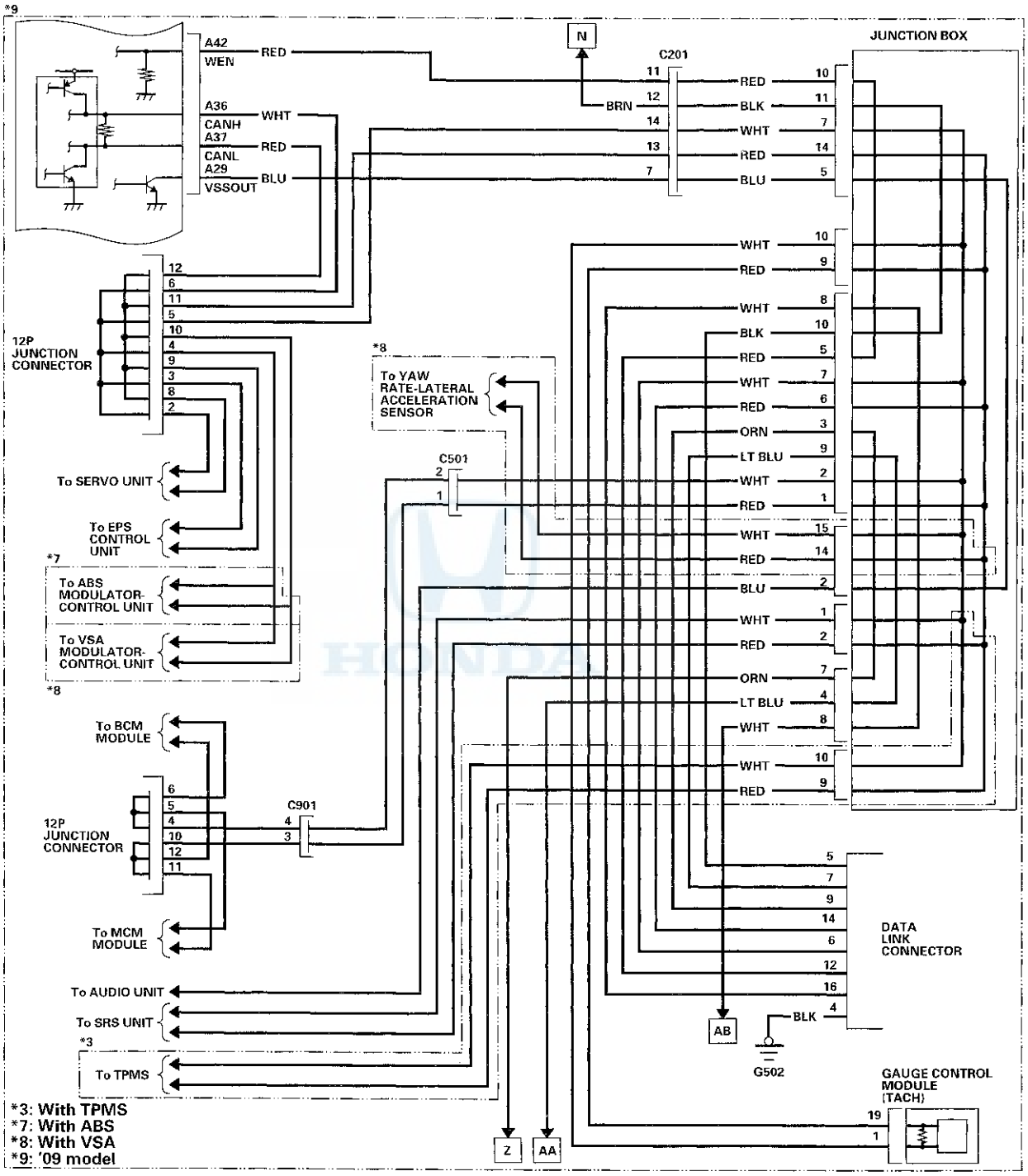
*9
A42
WEN
RED
A36
CANH
A37
CANL
A29
VSSOUT
WHT
RED
BLU
N
C201
BRN
JUNCTION BOX
12P JUNCTION CONNECTOR
To SERVO UNIT
To EPS CONTROL UNIT
*7
To ABS MODULATOR-CONTROL UNIT
To VSA MODULATOR-CONTROL UNIT
*8
To YAW RATE-LATERAL ACCELERATION SENSOR
C501
To BCM MODULE
C901
To MCM MODULE
To AUDIO UNIT
To SRS UNIT
*3
To TPMS
DATA LINK CONNECTOR
AB
BLK
G502
GAUGE CONTROL MODULE (TACH)
Z
AA
*3: With TPMS
*7: With ABS
*8: With VSA
*9: '09 model

(cont'd)

System Description (cont'd)

PCM Circuit Diagram (cont'd)

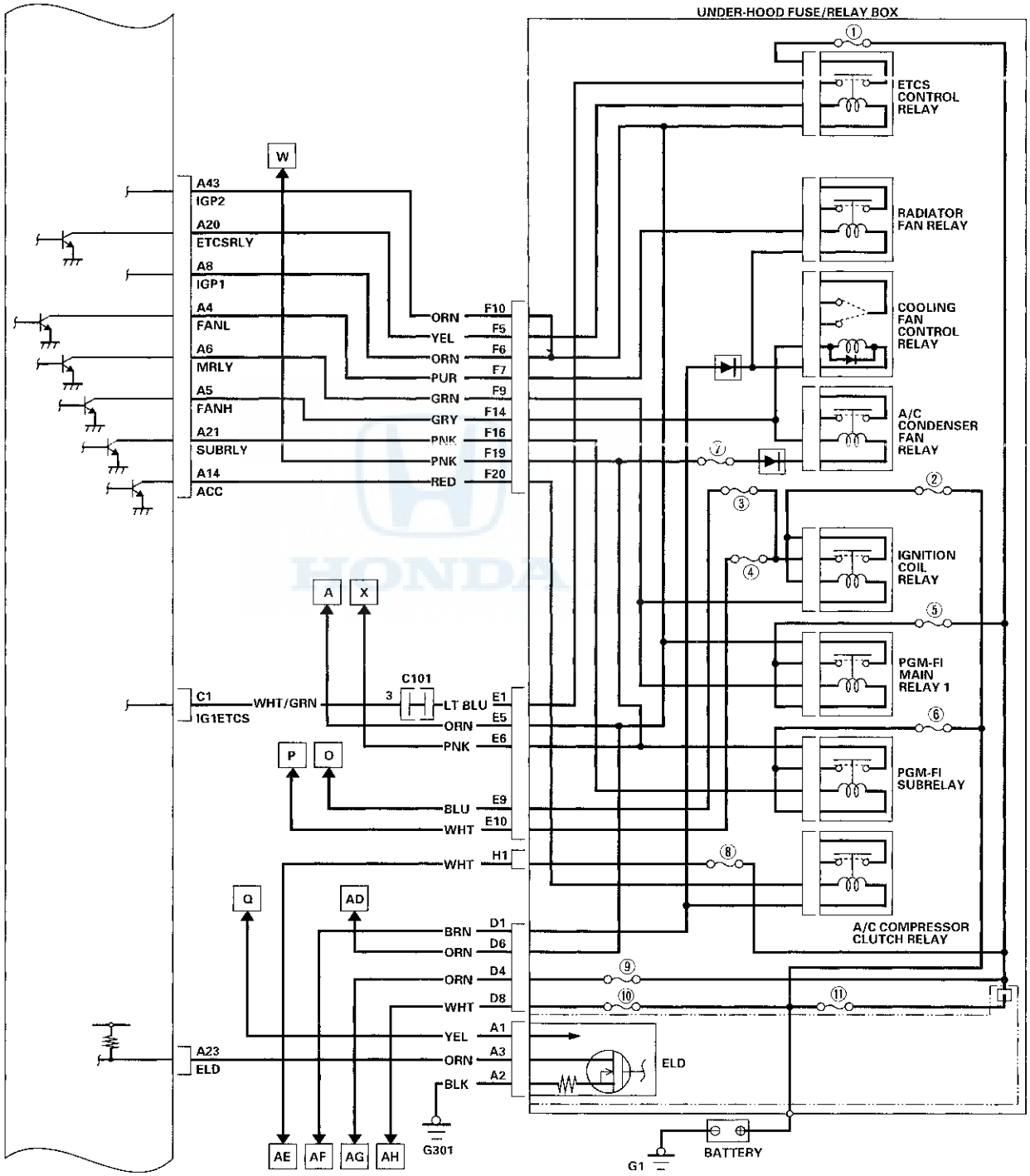

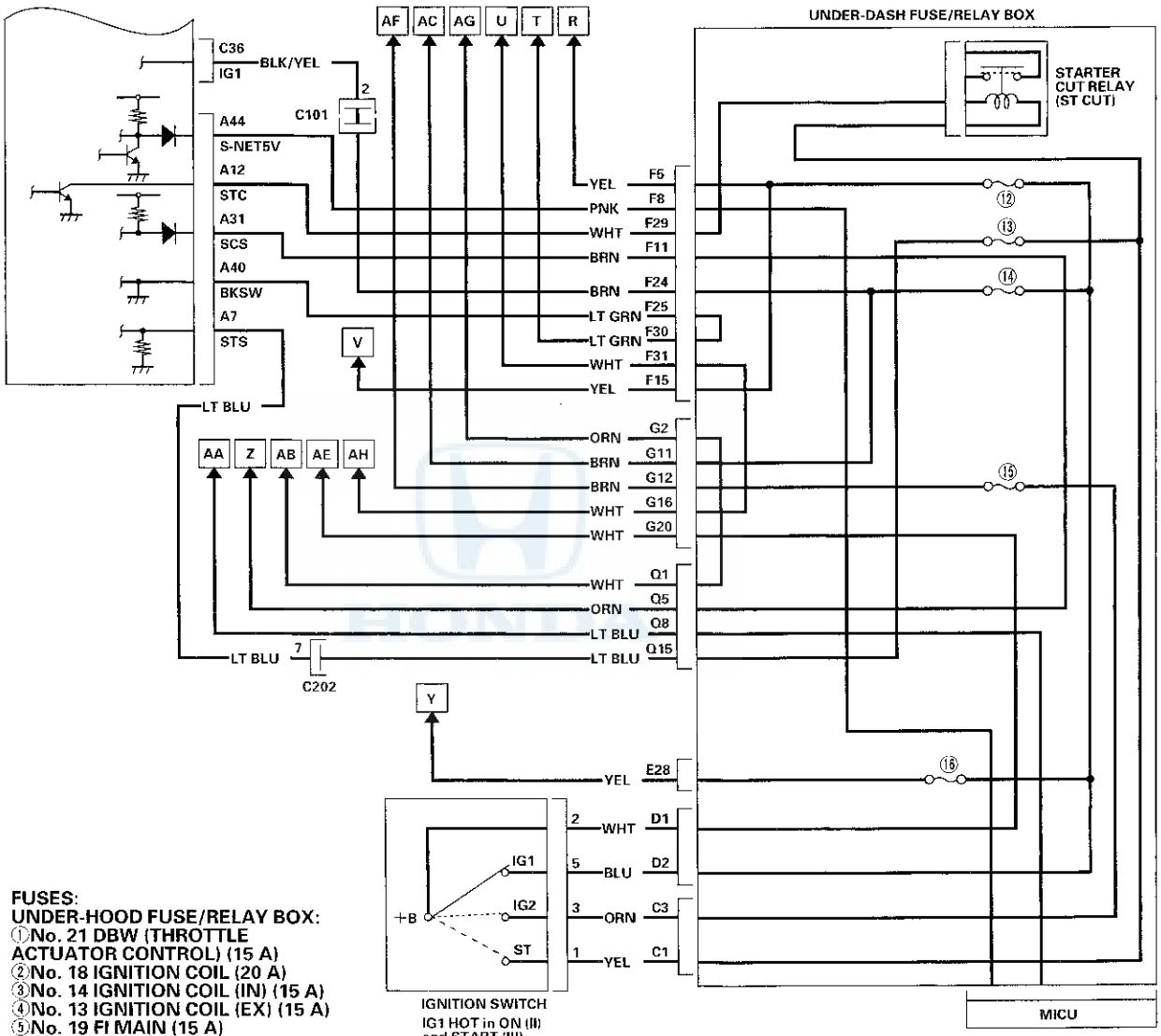

FUSES:

UNDER-HOOD FUSE/RELAY BOX:

①No. 21 DBW (THROTTLE ACTUATOR CONTROL) (15 A)
②No. 18 IGNITION COIL (20 A)
③No. 14 IGNITION COIL (IN) (15 A)
④No. 13 IGNITION COIL (EX) (15 A)
⑤No. 19 FI MAIN (15 A)
⑥No. 11 FI SUB (15 A)
⑦No. 15 OIL LVL (7.5 A)
⑧No. 2 IG MAIN (50 A)
⑨No. 23 BACK UP (10 A)
⑩No. 12 STOP & HORN (15 A)
⑪No. 1 MAIN FUSE (100 A)

UNDER-DASH FUSE/RELAY BOX:

⑫No. 3 ALTERNATOR (10 A)
⑬No. 23 STS (7.5 A)
⑭No. 2 FUEL PUMP (15 A)
⑮No. 36 IG2 HAC (A/C) (10 A)
⑯No. 10 METER (7.5 A)

How to Set Readiness Codes

Malfunction Indicator Lamp (MIL) Indication (In relation to Readiness Codes)

The vehicle has certain readiness codes that are part of the on-board diagnostics for the emissions systems. If the vehicle's battery has been disconnected or gone dead, if the DTCs have been cleared, or if the PCM has been reset, these readiness codes are reset to incomplete. In some states, part of the emissions testing is to make sure these codes are set to complete. If all of them are not set to complete, the vehicle may fail the emission test, or the test cannot be finished.

To check if the readiness codes are set to complete, turn the ignition switch ON (II), but do not start the engine. The MIL will come on for 15—20 seconds. If it then goes off, the readiness codes are set to complete. If it flashes five times, one or more readiness codes are not set to complete. To set readiness codes from incomplete to complete, do the procedure for the appropriate code.

To check the status of a specific DTC system, check the OBD status in the DTC MENU with the HDS (see page 11-8). This screen displays the code, the current data list of the enable criteria, and the status of the readiness testing.

Catalytic Converter Monitor and Readiness Code

NOTE:
- Do not turn the ignition switch to ACC (I) or to LOCK (0) during the procedure.
- All readiness codes are cleared when the battery is disconnected, if the DTCs have been cleared, or if the PCM is reset with the HDS.
- Low ambient temperatures or excessive stop-and-go traffic may increase the drive time needed to switch the readiness code from incomplete to complete.
- The readiness code will not switch to complete until all the enable criteria are met.
- If a fault in the secondary HO2S system caused the MIL to come on, the readiness code cannot be set to complete until you correct the fault.

Enable Criteria

- ECT SENSOR 1 at 158 °F (70 °C) or more.
- IAT SENSOR at 20 °F (—7 °C) or more.
- Vehicle speed above 25 mph (40 km/h).

Procedure

1. Connect the HDS to the vehicle's data link connector (DLC), and bring up the READINESS CODEs screen for Catalyst in the DTCs MENU.

2. Start the engine.

3. Test-drive the vehicle under stop-and-go conditions with short periods of steady cruise. After about 5 miles (8 km), the readiness code should switch to complete.

4. If the readiness code is still not set to complete, check for a Temporary DTC with the HDS. If there is no DTC, one or more of the enable criteria were probably not met; repeat the procedure.

Evaporative Emission (EVAP) Control System Monitor and Readiness Code

NOTE: All readiness codes are cleared when the battery is disconnected, if the DTCs have been cleared, or if the PCM is reset with the HDS.

Enable Criteria

- Battery voltage is more than 10.5 V.
- Engine at idle.
- ECT SENSOR 1 and SENSOR 2 between 176 °F (80 °C) and 212 °F (100 °C).
- MAP sensor less than 46.6 kPa (14 in.Hg, 350 mmHg).
- Vehicle speed (VSS) 0 mph (0 km/h).
- IAT SENSOR between 32 °F (0 °C) and 212 °F (100 °C).

Procedure

1. Connect the HDS to the DLC.

2. Start the engine.

3. Select EVAP TEST in the INSPECTION MENU with the HDS, then select the FUNCTION TEST in the EVAP TEST MENU.

   - If the result is normal, readiness is complete.
   - If the result is not normal, go to the next step.

4. Check for a Temporary DTC. If there is no DTC, one or more of the enable criteria were probably not met; repeat the procedure.

Air Fuel Ratio (A/F) Sensor Monitor and Readiness Code

NOTE:
- Do not turn the ignition switch to ACC (I) or to LOCK (0) during the procedure.
- All readiness codes are cleared when the battery is disconnected, if the DTCs have been cleared, or if the PCM is reset with the HDS.

Enable Criteria

ECT SENSOR 1 at 140 °F (60 °C) or more.

Procedure

1. Start the engine.

2. Test-drive the vehicle under stop-and-go conditions with short periods of steady cruise. During the drive, decelerate (with the throttle fully closed) for 5 seconds. After about 3.5 miles (5.6 km), the readiness code should switch from incomplete to complete.

3. Check the readiness codes screen for the AIR FUEL RATIO (A/F) SENSOR in the DTCs MENU with the HDS.

   - If the screen shows complete, readiness is complete.
   - If the screen shows not complete, go to the next step.

4. Check for a Temporary DTC. If there is no DTC, the enable criteria was probably not met. Select the DATA LIST MENU. Check the ECT SENSOR 1 in the ALL DATA LIST with the HDS. If the ECT SENSOR 1 is less than 140 °F (60 °C), run the engine until it is more than 140 °F (60 °C), then repeat the procedure.

(cont'd)

How to Set Readiness Codes (cont'd)

Air Fuel Ratio (A/F) Sensor Heater Monitor Readiness Code

NOTE: All readiness codes are cleared when the battery is disconnected, if the DTCs have been cleared, or if the PCM is reset with the HDS.

Procedure

1. Start the engine, and let it idle for 1 minute. The readiness code should switch from incomplete to complete.

2. If the readiness code is still not set to complete, check for a Temporary DTC. If there is no DTC, repeat the procedure.

Misfire Monitor and Readiness Code

- This readiness code is always set to available because misfiring is continuously monitored.
- Monitoring pauses, and the misfire counter resets, if the vehicle is driven over a rough road.
- Monitoring also pauses, and the misfire counter holds at its current value, if the throttle position changes more than a predetermined value, or if driving conditions fall outside the range of any related enable criteria.

Fuel System Monitor and Readiness Code

- This readiness code is always set to available because the fuel system is continuously monitored during closed loop operation.
- Monitoring pauses when the catalytic converter, EVAP control system, and A/F sensor monitors are active.
- Monitoring also pauses when any related enable criteria are not being met. Monitoring resumes when the enable criteria is again being met.

Comprehensive Component Monitor and Readiness Code

This readiness code is always set to available because the comprehensive component monitor is continuously running whenever the engine is cranking or running.

EGR Monitor and Readiness Code

NOTE:
- Do not turn the ignition switch to ACC (I) or to LOCK (0) during the procedure.
- All readiness codes are cleared when the battery is disconnected, if the DTCs have been cleared, or if the PCM is reset with the HDS.

Enable Criteria

ECT SENSOR 1 at 176 °F (80 °C) or more.

Procedure

1. Connect the HDS to the DLC.

2. Start the engine.

3. Drive at a steady speed with the transmission in D position, at 50—62 mph (80—100 km/h) or above for more than 10 seconds.

4. With the transmission in D position, decelerate from 62 mph (100 km/h) or above by completely releasing the throttle for at least 5 seconds. If the engine is stopped during this procedure, go to step 3 and do the procedure again.

5. Check the OBD status screen for DTC P0401 in the DTC's MENU with the HDS.

   - If it is passed, readiness is complete.
   - If it is not passed, go to step 3 and retest.

Component Location Index

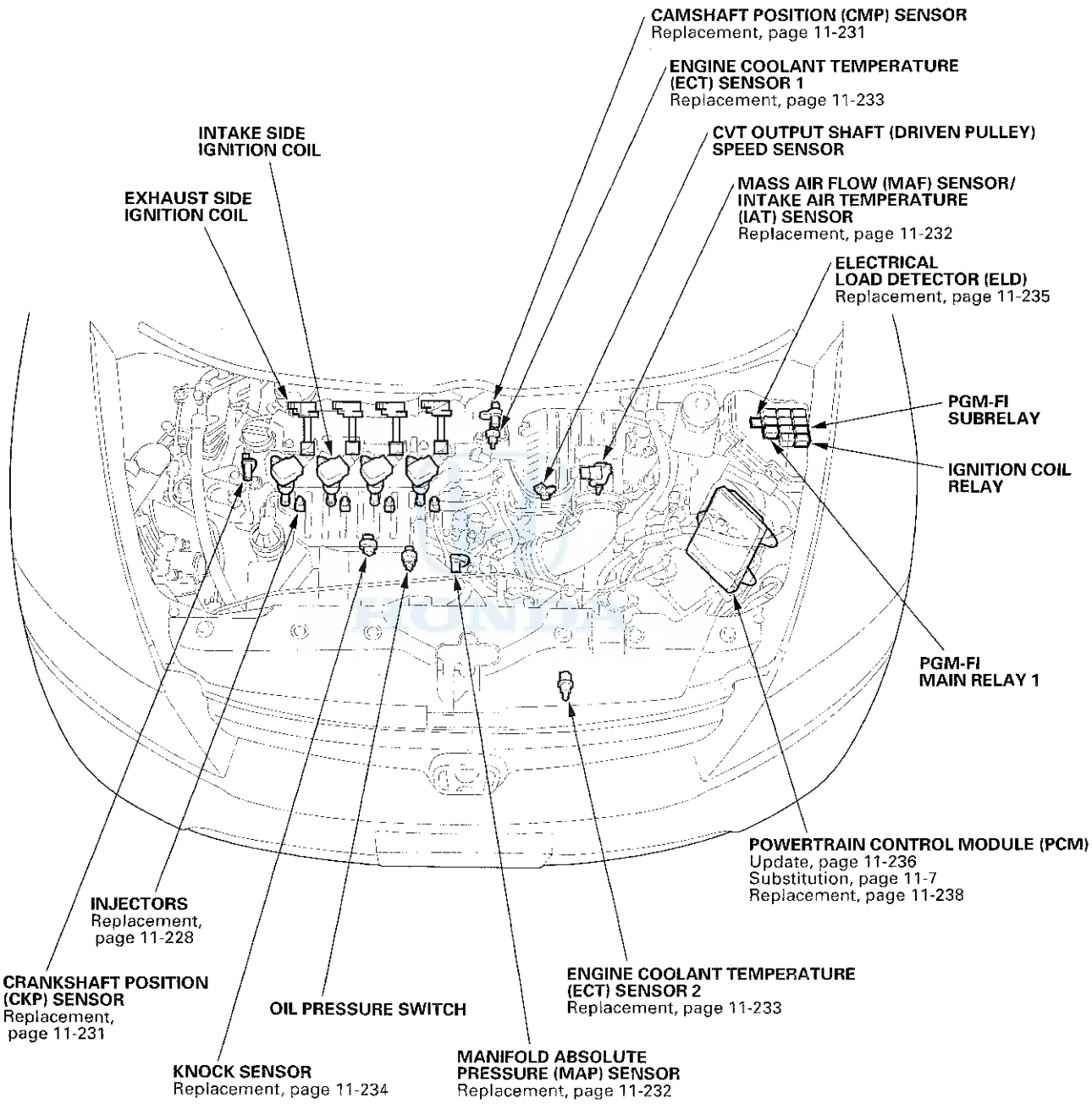

(cont'd)

Component Location Index (cont'd)

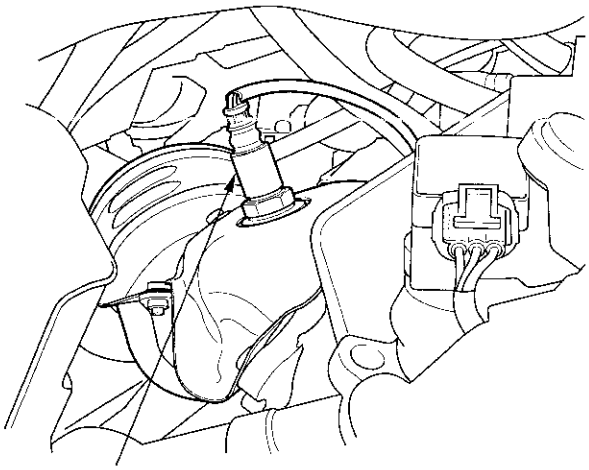

AIR FUEL RATIO (A/F) SENSOR (SENSOR 1)
Replacement, page 11-230

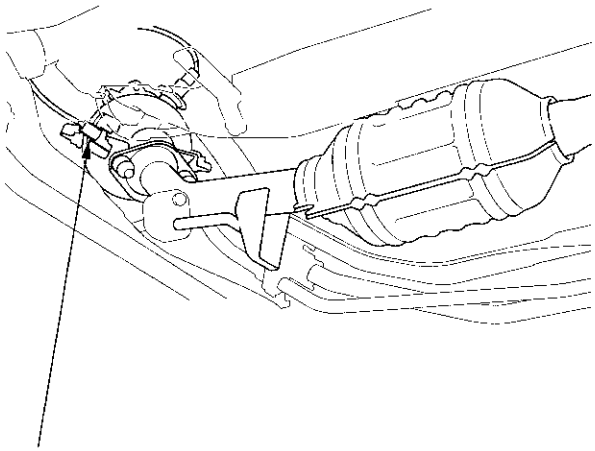

SECONDARY HEATED OXYGEN SENSOR (SECONDARY HO2S) (SENSOR 2)
Replacement, page 11-230

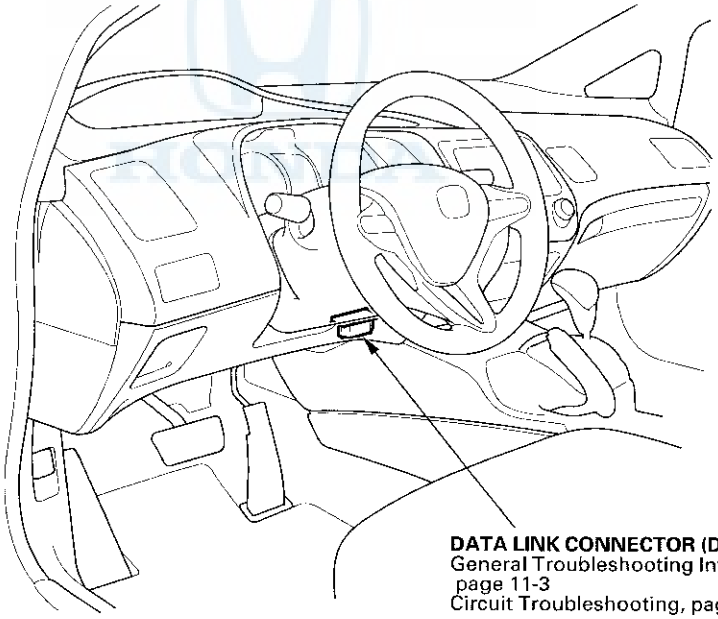

DATA LINK CONNECTOR (DLC)
General Troubleshooting Information, page 11-3
Circuit Troubleshooting, page 11-213

DTC Troubleshooting

DTC P0101: MAF Sensor Circuit Range/ Performance Problem

NOTE:
- Before you troubleshoot, record all freeze data and any on-board snapshot, and review the general troubleshooting information (see page 11-3).
- If DTC P0106, P2228, and/or P2229 are stored at the same time as DTC P0101, troubleshoot those DTCs first, then recheck for DTC P0101.

1. Check for poor connections or damage to these parts:

   - PCV hose
   - Intake air duct
   - Air cleaner
   - Purge (PCS) line

   Are the parts OK?

   YES△Go to step 2.

   NO△Repair or replace the damaged parts, then go to step 15.

2. Check for damage or looseness of the air duct at the air cleaner.

   Is it OK?

   YES△Go to step 3.

   NO△Reconnect or replace the air duct in the air cleaner, then go to step 15.

3. Check for a dirty air cleaner element.

   Is it dirty?

   YES△Replace the air cleaner element (see page 11-371), then go to step 15.

   NO△Go to step 4.

4. Turn the ignition switch to LOCK (0).

5. Turn the ignition switch to ON (II).

6. Check the MAF SENSOR in the DATA LIST with the HDS.

   Is there about 0.2 gm/s or 0.5 V?

   YES△Go to step 7.

   NO△Go to step 13.

7. Start the engine.

8. Vary the engine speed between 2,000 rpm and 3,000 rpm.

9. Check the MAF SENSOR in the DATA LIST with the HDS.

   Does the reading change?

   YES△Go to step 10.

   NO△Go to step 13.

10. Hold the engine speed at 3,000 rpm without load (in P or N) until the radiator fan comes on, then let it idle.

11. Test-drive the vehicle for several minutes in the range of these recorded freeze data parameters:

    - ENGINE SPEED
    - VSS
    - MAP SENSOR
    - MAF SENSOR

12. Monitor the OBD STATUS for DTC P0101 in the DTCs MENU with the HDS.

    Does the screen indicate FAILED?

    YES△Go to step 13.

    NO△If the screen indicates PASSED, intermittent failure, the system is OK at this time. Check for poor connections or loose terminals at the MAF sensor/IAT sensor and the PCM. If the screen indicates NOT COMPLETED, go to step 11 and recheck.

(cont'd)

DTC Troubleshooting (cont'd)

13. Turn the ignition switch to LOCK (0).

14. Replace the MAF sensor/IAT sensor (see page 11-232).

15. Turn the ignition switch to ON (II).

16. Reset the PCM with the HDS.

17. Do the PCM idle learn procedure (see page 11-333).

18. Test-drive the vehicle for several minutes in the range of these recorded freeze data parameters:

    - ENGINE SPEED
    - VSS
    - MAP SENSOR
    - MAF SENSOR

19. Check for Temporary DTCs or DTCs with the HDS.

    Is DTC P0101 indicated?

    YES△Check for poor connections or loose terminals at the MAF sensor/IAT sensor and the PCM, then go to step 1.

    NO△Go to step 20.

20. Monitor the OBD STATUS for DTC P0101 in the DTCs MENU with the HDS.

    Does the screen indicate PASSED?

    YES△Troubleshooting is complete. If any other Temporary DTCs or DTCs were indicated in step 19, go to the indicated DTC's troubleshooting.■

    NO△If the screen indicates FAILED, check for poor connections or loose terminals at the MAF sensor/IAT sensor and the PCM, then go to step 1. If the screen indicates NOT COMPLETED, go to step 18.

DTC P0102: MAF Sensor Circuit Low Voltage

NOTE: Before you troubleshoot, record all freeze data and any on-board snapshot, and review the general troubleshooting information (see page 11-3).

1. Turn the ignition switch to ON (II), and wait 2 seconds.

2. Check the MAF SENSOR in the DATA LIST with the HDS.

   Is about 0 gm/s, or 0.1 V or less indicated?

   YES△Go to step 3.

   NO△Intermittent failure, the system is OK at this time. Check for poor connections or loose terminals at the MAF sensor/IAT sensor and the PCM.■

3. Check the No. 3 ALTERNATOR (10 A) fuse in the under-dash fuse/relay box.

   Is the fuse OK?

   YES△Go to step 4.

   NO△Repair short in the wire between the MAF sensor and the No. 3 ALTERNATOR (10 A) fuse. Also replace the No. 3 ALTERNATOR (10 A) fuse, then go to step 20.

4. Turn the ignition switch to LOCK (0).

5. Disconnect the MAF sensor/IAT sensor 5P connector.

6. Turn the ignition switch to ON (II).

7. Measure the voltage between MAF sensor/IAT sensor 5P connector terminal No. 5 and body ground.

MAF SENSOR/IAT SENSOR 5P CONNECTOR

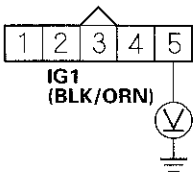

Wire side of female terminals

Is there battery voltage?

YES△Go to step 8.

NO△Repair open in the wire between the No. 3 ALTERNATOR (10 A) fuse and the MAF sensor/IAT sensor, then go to step 20.

8. Turn the ignition switch to LOCK (0).

9. Measure the resistance between MAF sensor/IAT sensor 5P connector terminal No. 3 and body ground.

MAF SENSOR/IAT SENSOR 5P CONNECTOR

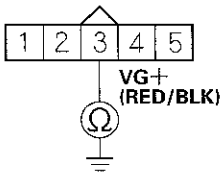

Wire side of female terminals

Is there 190–210 kΩ ?

YES△Go to step 14.

NO△Go to step 10.

10. Jump the SCS line with the HDS.

11. Disconnect PCM connector B (44P).

12. Check for continuity between PCM connector terminal B30 and body ground.

PCM CONNECTOR B (44P)

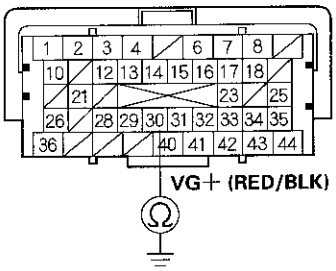

Terminal side of female terminals

Is there continuity?

YES△Repair short in the wire between the PCM (B30) and the MAF sensor/IAT sensor, then go to step 21.

NO△Go to step 13.

(cont'd)

DTC Troubleshooting (cont'd)

13. Check for continuity between MAF sensor/IAT sensor 5P connector terminal No. 3 and PCM connector terminal B30.

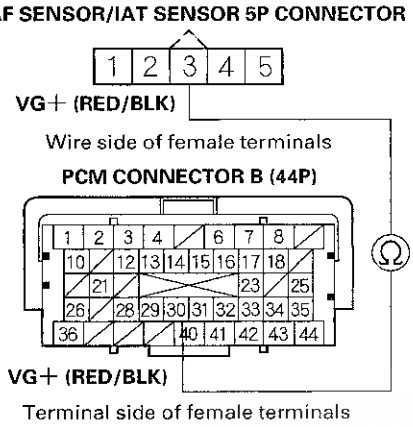

Is there continuity?

YES△Go to step 26.

NO△Repair open in the wire between the PCM (B30) and the MAF sensor/IAT sensor, then go to step 21.

14. Substitute a known-good MAF sensor/IAT sensor (see page 11-232).

15. Reconnect all connectors.

16. Turn the ignition switch to ON (II).

17. Clear the DTC with the HDS.

18. Start the engine. Hold the engine speed at 2,000 rpm without load (in P or N).

19. Check for Temporary DTCs or DTCs with the HDS.

    Is DTC P0102 indicated?

    YES△Go to step 27.

    NO△Replace the original MAF sensor/IAT sensor (see page 11-232), then go to step 20.

20. Turn the ignition switch to LOCK (0).

21. Reconnect all connectors.

22. Turn the ignition switch to ON (II).

23. Reset the PCM with the HDS.

24. Do the PCM idle learn procedure (see page 11-333).

25. Check for Temporary DTCs or DTCs with the HDS.

    Is DTC P0102 indicated?

    YES△Check for poor connections or loose terminals at the MAF sensor/IAT sensor and the PCM, then go to step 1.

    NO△Troubleshooting is complete. If any other Temporary DTCs or DTCs are indicated, go to the indicated DTC's troubleshooting. ■

26. Reconnect all connectors.

27. Update the PCM if it does not have the latest software (see page 11-236), or substitute a known-good PCM (see page 11-7).

28. Check for Temporary DTCs or DTCs with the HDS.

    Is DTC P0102 indicated?

    YES△Check for poor connections or loose terminals at the MAF sensor/IAT sensor and the PCM. If the PCM was updated, substitute a known-good PCM (see page 11-7), then recheck. If the PCM was substituted, go to step 1.

    NO△If the PCM was updated, troubleshooting is complete. If the PCM was substituted, replace the original PCM (see page 11-238). If any other Temporary DTCs or DTCs are indicated, go to the indicated DTC's troubleshooting.■

DTC P0103: MAF Sensor Circuit High Voltage

NOTE: Before you troubleshoot, record all freeze data and any on-board snapshot, and review the general troubleshooting information (see page 11-3).

1. Turn the ignition switch to ON (II), and wait 2 seconds.

2. Check the MAF SENSOR in the DATA LIST with the HDS.

   Is about 202 gm/s, or 4.89 V or more indicated?

   YES△Go to step 3.

   NO△Intermittent failure, the system is OK at this time. Check for poor connections or loose terminals at the MAF sensor and the PCM.■

3. Turn the ignition switch to LOCK (0).

4. Jump the SCS line with the HDS.

5. Disconnect the MAF sensor/IAT sensor 5P connector.

6. Disconnect PCM connector B (44P).

(cont'd)

DTC Troubleshooting (cont'd)

7. Check for continuity between MAF sensor/IAT sensor 5P connector terminal No. 4 and PCM connector terminal B32.

MAF SENSOR/IAT SENSOR 5P CONNECTOR

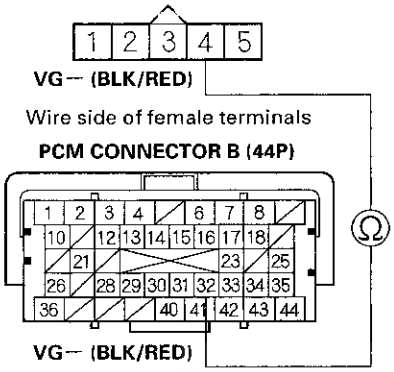

Is there continuity?

YES△Go to step 8.

NO△Repair open in the wire between the PCM (B32) and the MAF sensor, then go to step 15.

8. Reconnect PCM connector B (44P).

9. Connect MAF sensor/IAT sensor 5P connector terminals No. 3 and No. 4 with a jumper wire.

MAF SENSOR/IAT SENSOR 5P CONNECTOR

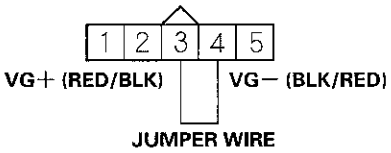

10. Turn the ignition switch to ON (II).

11. Clear the DTC with the HDS.

12. Check for Temporary DTCs or DTCs with the HDS.

    Is DTC P0103 indicated?

    YES△Go to step 20.

    NO△Go to step 13.

13. Turn the ignition switch to LOCK (0).

14. Replace the MAF sensor/IAT sensor (see page 11-232).

15. Reconnect all connectors.

16. Turn the ignition switch to ON (II).

17. Reset the PCM with the HDS.

18. Do the PCM idle learn procedure (see page 11-333).

19. Check for Temporary DTCs or DTCs with the HDS.

    Is DTC P0103 indicated?

    YES△Check for poor connections or loose terminals at the MAF sensor/IAT sensor and the PCM, then go to step 1.

    NO△Troubleshooting is complete. If any other Temporary DTCs or DTCs are indicated, go to the indicated DTC's troubleshooting.■

20. Turn the ignition switch to LOCK (0).

21. Reconnect all connectors.

22. Update the PCM if it does not have the latest software (see page 11-236), or substitute a known-good PCM (see page 11-7).

23. Check for Temporary DTCs or DTCs with the HDS.

    Is DTC P0103 indicated?

    YES△Check for poor connections or loose terminals at the MAF sensor/IAT sensor and the PCM. If the PCM was updated, substitute a known-good PCM (see page 11-7), then recheck. If the PCM was substituted, go to step 1.

    NO△If the PCM was updated, troubleshooting is complete. If the PCM was substituted, replace the original PCM (see page 11-238). If any other Temporary DTCs or DTCs are indicated, go to the indicated DTC's troubleshooting.■

DTC P0106: MAP Sensor Circuit Range/ Performance Problem

NOTE: Before you troubleshoot, record all freeze data and any on-board snapshot, and review the general troubleshooting information (see page 11-3).

1. Check for vacuum leaks at these parts:

   - PCV valve
   - PCV hose
   - Purge (PCS) line
   - Throttle body
   - Intake manifold

   Are there any leaks?

   YES△Repair or replace the damaged part(s), then go to step 7.

   NO△Go to step 2.

2. Start the engine. Hold the engine speed at 3,000 rpm without load (in P or N) until the radiator fan comes on, then let it idle.

3. Test-drive the vehicle for 10 seconds in the range of these recorded freeze data parameters:

   - ENGINE SPEED
   - VSS
   - APP SENSOR

4. Monitor the OBD STATUS for DTC P0106 in the DTCs MENU with the HDS.

   Does the screen indicate FAILED?

   YES△Go to step 5.

   NO△If the screen indicates PASSED. Intermittent failure, the system is OK at this time. Check for poor connections or loose terminals at the MAP sensor and the PCM. If the screen indicates NOT COMPLETED, go to step 2 and recheck.

(cont'd)

DTC Troubleshooting (cont'd)

5. Turn the ignition switch to LOCK (0).

6. Replace the MAP sensor (see page 11-232).

7. Turn the ignition switch to ON (II).

8. Reset the PCM with the HDS.

9. Do the PCM idle learn procedure (see page 11-333).

10. Start the engine. Hold the engine speed at 3,000 rpm without load (in P or N) until the radiator fan comes on, then let it idle.

11. Test-drive the vehicle for 10 seconds in the range of these recorded freeze data parameters:

    - ENGINE SPEED
    - VSS
    - APP SENSOR

12. Check for Temporary DTCs or DTCs with the HDS.

    Is DTC P0106 indicated?

    YES△Check for poor connections or loose terminals at the MAP sensor and the PCM, then go to step 1.

    NO△Go to step 13.

13. Monitor the OBD STATUS for DTC P0106 in the DTCs MENU with the HDS.

    Does the screen indicate PASSED?

    YES△Troubleshooting is complete. If any other Temporary DTCs or DTCs were indicated in step 12, go to the indicated DTC's troubleshooting.■

    NO△If the screen indicates FAILED, check for poor connections or loose terminals at the MAP sensor and the PCM, then go to step 1. If the screen indicates NOT COMPLETED, go to step 10.

DTC P0107: MAP Sensor Circuit Low Voltage

NOTE: Before you troubleshoot, record all freeze data and any on-board snapshot, and review the general troubleshooting information (see page 11-3).

1. Turn the ignition switch to ON (II).

2. Check the MAP SENSOR in the DATA LIST with the HDS.

   Is about 3 kPa (1.0 in.Hg, 26 mmHg), or 0.23 V or less indicated?

   YES△Go to step 3.

   NO△Intermittent failure, the system is OK at this time. Check for poor connections or loose terminals at the MAP sensor and the PCM.■

3. Turn the ignition switch to LOCK (0).

4. Disconnect the MAP sensor 3P connector.

5. Turn the ignition switch to ON (II).

6. Check the MAP SENSOR in the DATA LIST with the HDS.

   Is about 3 kPa (1.0 in.Hg, 26 mmHg), or 0.23 V or less indicated?

   YES△Go to step 12.

   NO△Go to step 7.

7. Measure the voltage between MAP sensor 3P connector terminals No. 1 and No. 3.

MAP SENSOR 3P CONNECTOR

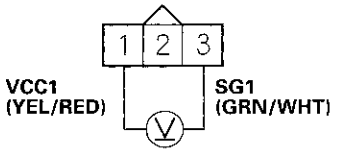

Wire side of female terminals

Is there about 5 V?

YES△Go to step 16.

NO△Go to step 8.

8. Turn the ignition switch to LOCK (0).

9. Jump the SCS line with the HDS.

10. Disconnect PCM connector C (44P).

11. Check for continuity between PCM connector terminal C13 and MAP sensor 3P connector terminal No. 1.

MAP SENSOR 3P CONNECTOR

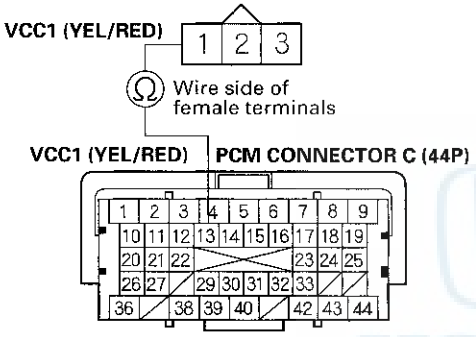

Terminal side of female terminals

Is there continuity?

YES△Go to step 23.

NO△Repair open in the wire between the PCM (C13) and the MAP sensor, then go to step 18.

12. Turn the ignition switch to LOCK (0).

13. Jump the SCS line with the HDS.

14. Disconnect PCM connector C (44P).

15. Check for continuity between MAP sensor 3P connector terminal No. 2 and body ground.

MAP SENSOR 3P CONNECTOR

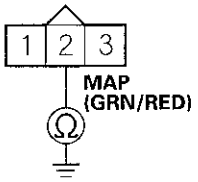

Wire side of female terminals

Is there continuity?

YES△Repair short in the wire between the PCM (C11) and the MAP sensor, then go to step 18.

NO△Go to step 23.

(cont'd)

DTC Troubleshooting (cont'd)

16. Turn the ignition switch to LOCK (0).

17. Replace the MAP sensor (see page 11-232).

18. Reconnect all connectors.

19. Turn the ignition switch to ON (II).

20. Reset the PCM with the HDS.

21. Do the PCM idle learn procedure (see page 11-333).

22. Check for Temporary DTCs or DTCs with the HDS.

    Is DTC P0107 indicated?

    YES△Check for poor connections or loose terminals at the MAP sensor and the PCM, then go to step 1.

    NO△Troubleshooting is complete. If any other Temporary DTCs or DTCs are indicated, go to the indicated DTC's troubleshooting.■

23. Reconnect all connectors.

24. Update the PCM if it does not have the latest software (see page 11-236), or substitute a known-good PCM (see page 11-7).

25. Check for Temporary DTCs or DTCs with the HDS.

    Is DTC P0107 indicated?

    YES△Check for poor connections or loose terminals at the MAP sensor and the PCM. If the PCM was updated, substitute a known-good PCM (see page 11-7), then recheck. If the PCM was substituted, go to step 1.

    NO△If the PCM was updated, troubleshooting is complete. If the PCM was substituted, replace the original PCM (see page 11-238). If any other Temporary DTCs or DTCs are indicated, go to the indicated DTC's troubleshooting.■

DTC P0108: MAP Sensor Circuit High Voltage

NOTE: Before you troubleshoot, record all freeze data and any on-board snapshot, and review the general troubleshooting information (see page 11-3).

1. Turn the ignition switch to ON (II).

2. Check the MAP SENSOR in the DATA LIST with the HDS.

   Is about 160 kPa (47.1 in.Hg, 1,197 mmHg), or 4.49 V or more indicated?

   YES△Go to step 3.

   NO△Intermittent failure, the system is OK at this time. Check for poor connections or loose terminals at the MAP sensor and the PCM.■

3. Turn the ignition switch to LOCK (0).

4. Disconnect the MAP sensor 3P connector.

5. Connect MAP sensor 3P connector terminals No. 2 and No. 3 with a jumper wire.

MAP SENSOR 3P CONNECTOR

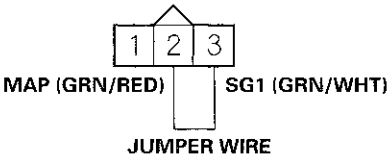

Wire side of female terminals

6. Turn the ignition switch to ON (II).

7. Check the MAP SENSOR in the DATA LIST with the HDS.

   Is about 160 kPa (47.1 in.Hg, 1,197 mmHg), or 4.49 V or more indicated?

   YES△Go to step 8.

   NO△Go to step 18.

8. Remove the jumper wire from the MAP sensor 3P connector.

9. Measure the voltage between MAP sensor 3P connector terminals No. 1 and No. 3.

MAP SENSOR 3P CONNECTOR

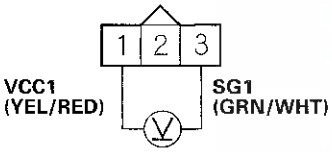

Wire side of female terminals

Is there about 5 V?

YES△Go to step 14.

NO△Go to step 10.

10. Turn the ignition switch to LOCK (0).

11. Jump the SCS line with the HDS.

12. Disconnect PCM connector C (44P).

13. Check for continuity between PCM connector terminal C14 and MAP sensor 3P connector terminal No. 3.

MAP SENSOR 3P CONNECTOR

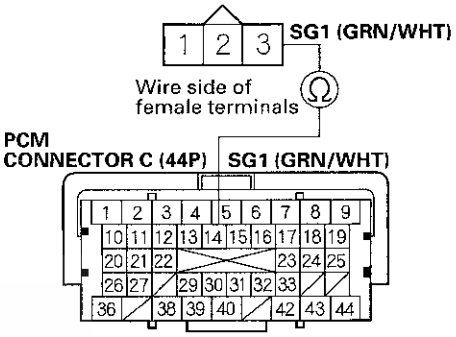

Terminal side of female terminals

Is there continuity?

YES△Go to step 25.

NO△Repair open in the wire between the PCM (C14) and the MAP sensor, then go to step 20.

(cont'd)

DTC Troubleshooting (cont'd)

14. Turn the ignition switch to LOCK (0).

15. Jump the SCS line with the HDS.

16. Disconnect PCM connector C (44P).

17. Check for continuity between PCM connector terminal C11 and MAP sensor 3P connector terminal No. 2.

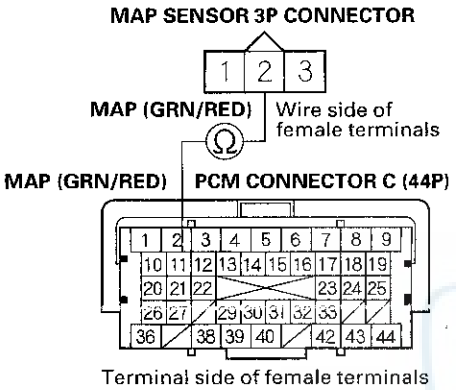

Is there continuity?

YES△Go to step 25.

NO△Repair open in the wire between the PCM (C11) and the MAP sensor, then go to step 20.

18. Turn the ignition switch to LOCK (0).

19. Replace the MAP sensor (see page 11-232).

20. Reconnect all connectors.

21. Turn the ignition switch to ON (II).

22. Reset the PCM with the HDS.

23. Do the PCM idle learn procedure (see page 11-333).

24. Check for Temporary DTCs or DTCs with the HDS.

Is DTC P0108 indicated?

YES△Check for poor connections or loose terminals at the MAP sensor and the PCM, then go to step 1.

NO△Troubleshooting is complete. If any other Temporary DTCs or DTCs are indicated, go to the indicated DTC's troubleshooting.■

25. Reconnect all connectors.

26. Update the PCM if it does not have the latest software (see page 11-236), or substitute a known-good PCM (see page 11-7).

27. Check for Temporary DTCs or DTCs with the HDS.

Is DTC P0108 indicated?

YES△Check for poor connections or loose terminals at the MAP sensor and the PCM. If the PCM was updated, substitute a known-good PCM (see page 11-7), then recheck. If the PCM was substituted, go to step 1.

NO△If the PCM was updated, troubleshooting is complete. If the PCM was substituted, replace the original PCM (see page 11-238). If any other Temporary DTCs or DTCs are indicated, go to the indicated DTC's troubleshooting.■

DTC P0111: IAT Sensor Circuit Range/ Performance Problem

NOTE: Before you troubleshoot, record all freeze data and any on-board snapshot, and review the general troubleshooting information (see page 11-3).

1. Check for poor connections or loose terminals at ECT sensor 1/2 and the MAF sensor/IAT sensor.

   Are the connections and terminals OK?

   YES△Go to step 2.

   NO△Repair the connectors or terminals, then go to step 15.

2. Remove the MAF sensor/IAT sensor (see page 11-232).

3. Allow the MAF sensor/IAT sensor to cool to the ambient temperature.

4. Note the ambient temperature.

5. Connect the MAF sensor/IAT sensor to the 5P connector, but do not install the sensor onto the air cleaner.

6. Turn the ignition switch to ON (II).

7. Note the value of the IAT SENSOR quickly in the DATA LIST with the HDS.

8. Compare the value of IAT SENSOR and the ambient temperature.

   Does the value of IAT SENSOR differ 5.4 °F (3 °C) or more?

   YES△Go to step 13.

   NO△Go to step 9.

9. Disconnect the MAF sensor/IAT sensor from the 5P connector.

10. Using a heat gun, blow hot air on the MAF sensor/ IAT sensor for a few seconds. Do not apply the heat longer than a few seconds or you will damage the sensor.

11. Connect the MAF sensor/IAT sensor to the 5P connector, but do not install the sensor onto the air cleaner.

12. Check the IAT SENSOR in the DATA LIST with the HDS.

    Does the IAT SENSOR change 76 °F (42 °C) or more?

    YES△Intermittent failure, the system is OK at this time. Check for poor connections or loose terminals at the MAF sensor/IAT sensor and the PCM.■

    NO△Go to step 13.

13. Turn the ignition switch to LOCK (0).

14. Replace the MAF sensor/IAT sensor (see page 11-232).

15. Turn the ignition switch to ON (II).

16. Reset the PCM with the HDS.

17. Do the PCM idle learn procedure (see page 11-333).

18. Check for Temporary DTCs or DTCs with the HDS.

    Is DTC P0111 indicated?

    YES△Check for poor connections or loose terminals at the MAF sensor/IAT sensor and the PCM, then go to step 1.

    NO△Troubleshooting is complete. If any other Temporary DTCs or DTCs are indicated, go to the indicated DTC's troubleshooting.■

DTC Troubleshooting (cont'd)

DTC P0112: IAT Sensor Circuit Low Voltage

NOTE: Before you troubleshoot, record all freeze data and any on-board snapshot, and review the general troubleshooting information (see page 11-3).

1. Turn the ignition switch to ON (II).
2. Check the IAT SENSOR in the DATA LIST with the HDS.

   Is about 356 °F (180 °C) or more, or 0.08 V or less indicated?

   YES△Go to step 3.

   NO△Intermittent failure, the system is OK at this time. Check for poor connections or loose terminals at the MAF sensor/IAT sensor and the PCM.■
3. Turn the ignition switch to LOCK (0).
4. Disconnect the MAF sensor/IAT sensor 5P connector.
5. Turn the ignition switch to ON (II).
6. Check the IAT SENSOR in the DATA LIST with the HDS.

   Is about 356 °F (180 °C) or more, or 0.08 V or less indicated?

   YES△Go to step 7.

   NO△Go to step 11.
7. Turn the ignition switch to LOCK (0).
8. Jump the SCS line with the HDS.
9. Disconnect PCM connector B (44P).
10. Check for continuity between MAF sensor/IAT sensor 5P connector terminal No. 2 and body ground.

MAF SENSOR/IAT SENSOR 5P CONNECTOR

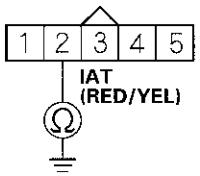

Wire side of female terminals

Is there continuity?

YES△Repair short in the wire between the MAF sensor/IAT sensor and the PCM (B31), then go to step 13.

NO△Go to step 18.

11. Turn the ignition switch to LOCK (0).
12. Replace the MAF sensor/IAT sensor (see page 11-232).
13. Reconnect all connectors.
14. Turn the ignition switch to ON (II).
15. Reset the PCM with the HDS.
16. Do the PCM idle learn procedure (see page 11-333).
17. Check for Temporary DTCs or DTCs with the HDS.

    Is DTC P0112 indicated?

    YES△Check for poor connections or loose terminals at the MAF sensor/IAT sensor and the PCM, then go to step 1.

    NO△Troubleshooting is complete. If any other Temporary DTCs or DTCs are indicated, go to the indicated DTC's troubleshooting.■

18. Reconnect all connectors.

19. Update the PCM if it does not have the latest software (see page 11-236), or substitute a known-good PCM (see page 11-7).

20. Check for Temporary DTCs or DTCs with the HDS.

    Is DTC P0112 indicated?

    YES△Check for poor connections or loose terminals at the MAF sensor/IAT sensor and the PCM. If the PCM was updated, substitute a known-good PCM (see page 11-7), then recheck. If the PCM was substituted, go to step 1.

    NO△If the PCM was updated, troubleshooting is complete. If the PCM was substituted, replace the original PCM (see page 11-238). If any other Temporary DTCs or DTCs are indicated, go to the indicated DTC's troubleshooting.■

DTC P0113: IAT Sensor Circuit High Voltage

NOTE: Before you troubleshoot, record all freeze data and any on-board snapshot, and review the general troubleshooting information (see page 11-3).

1. Turn the ignition switch to ON (II).

2. Check the IAT SENSOR in the DATA LIST with the HDS.

   Is about −40 °F (−40 °C) or less, or 4.92 V or more indicated?

   YES△Go to step 3.

   NO△Intermittent failure, the system is OK at this time. Check for poor connections or loose terminals at the MAF sensor/IAT sensor and the PCM.■

3. Turn the ignition switch to LOCK (0).

4. Disconnect the MAF sensor/IAT sensor 5P connector.

5. Connect MAF sensor/IAT sensor 5P connector terminals No. 1 and No. 2 with a jumper wire.

MAF SENSOR/IAT SENSOR 5P CONNECTOR

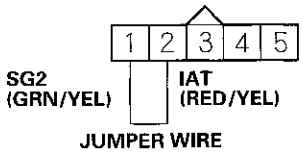

Wire side of female terminals

6. Turn the ignition switch to ON (II).

7. Check the IAT SENSOR in the DATA LIST with the HDS.

   Is about −40 °F (−40 °C) or less, or 4.92 V or more indicated?

   YES△Go to step 8.

   NO△Go to step 20.

(cont'd)

DTC Troubleshooting (cont'd)

8. Turn the ignition switch to LOCK (0).
9. Remove the jumper wire from the MAF sensor/IAT sensor 5P connector.
10. Turn the ignition switch to ON (II).
11. Measure the voltage between MAF sensor/IAT sensor 5P connector terminal No. 2 and body ground.

MAF SENSOR/IAT SENSOR 5P CONNECTOR

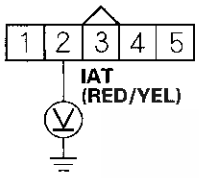

Wire side of female terminals

Is there about 5 V?

YES△Go to step 12.

NO△Go to step 16.

12. Turn the ignition switch to LOCK (0).
13. Jump the SCS line with the HDS.
14. Disconnect PCM connector B (44P).
15. Check for continuity between MAF sensor/IAT sensor 5P connector terminal No. 1 and PCM connector terminal B33.

MAF SENSOR/IAT SENSOR 5P CONNECTOR

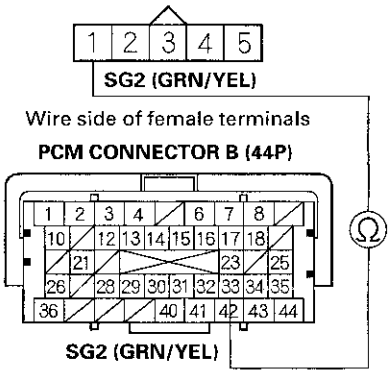

Is there continuity?

YES△Go to step 27.

NO△Repair open in the wire between the PCM (B33) and the MAF sensor/IAT sensor, then go to step 22.

16. Turn the ignition switch to LOCK (0).

17. Jump the SCS line with the HDS.

18. Disconnect PCM connector B (44P).

19. Check for continuity between MAF sensor/IAT sensor 5P connector terminal No. 2 and PCM connector terminal B31.

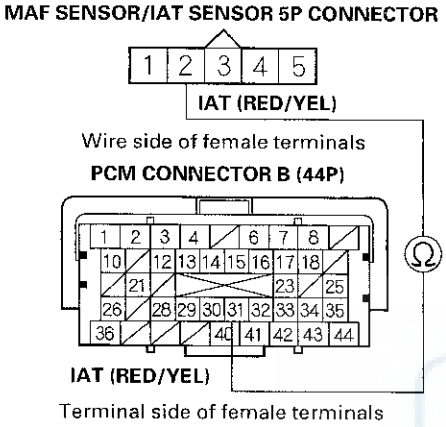

Is there continuity?

YES△Go to step 27.

NO△Repair open in the wire between the PCM (B31) and the MAF sensor/IAT sensor, then go to step 22.

20. Turn the ignition switch to LOCK (0).

21. Replace the MAF sensor/IAT sensor (see page 11-232).

22. Reconnect all connectors.

23. Turn the ignition switch to ON (II).

24. Reset the PCM with the HDS.

25. Do the PCM idle learn procedure (see page 11-333).

26. Check for Temporary DTCs or DTCs with the HDS.

Is DTC P0113 indicated?

YES△Check for poor connections or loose terminals at the MAF sensor/IAT sensor and the PCM, then go to step 1.

NO△Troubleshooting is complete. If any other Temporary DTCs or DTCs are indicated, go to the indicated DTC's troubleshooting.■

27. Reconnect all connectors.

28. Update the PCM if it does not have the latest software (see page 11-236), or substitute a known-good PCM (see page 11-7).

29. Check for Temporary DTCs or DTCs with the HDS.

Is DTC P0113 indicated?

YES△Check for poor connections or loose terminals at the MAF sensor/IAT sensor and the PCM. If the PCM was updated, substitute a known-good PCM (see page 11-7), then recheck. If the PCM was substituted, go to step 1.

NO△If the PCM was updated, troubleshooting is complete. If the PCM was substituted, replace the original PCM (see page 11-238). If any other Temporary DTCs or DTCs are indicated, go to the indicated DTC's troubleshooting.■

DTC Troubleshooting (cont'd)

DTC P0116: ECT Sensor 1 Circuit Range/ Performance Problem

NOTE: Before you troubleshoot, record all freeze data and any on-board snapshot, and review the general troubleshooting information (see page 11-3).

1. Turn the ignition switch to ON (II).
2. Check ECT SENSOR 1 in the DATA LIST with the HDS.

   Is about 176 °F (80 °C) or more, or 0.78 V or less indicated?

   YES△Go to step 6.

   NO△Go to step 3.
3. Note the value of ECT SENSOR 1 in the DATA LIST with the HDS.
4. Start the engine. Hold the engine speed at 3,000 rpm without load (in P or N) until the radiator fan comes on, then let it idle.
5. Check ECT SENSOR 1 in the DATA LIST with the HDS.

   Does ECT SENSOR 1 change 18 °F (10 °C) or more?

   YES△Intermittent failure, the system is OK at this time. Check for poor connections or loose terminals at ECT sensor 1 and the PCM.■

   NO△Go to step 11.
6. Note the value of ECT SENSOR 1 in the DATA LIST with the HDS.
7. Turn the ignition switch to LOCK (0).
8. Open the hood, and let the engine cool for 3 hours.
9. Turn the ignition switch to ON (II).
10. Check ECT SENSOR 1 in the DATA LIST with the HDS.

    Does ECT SENSOR 1 change 18 °F (10 °C) or more?

    YES△Intermittent failure, the system is OK at this time. Check for poor connections or loose terminals at ECT sensor 1 and the PCM.■

    NO△Go to step 11.
11. Turn the ignition switch to LOCK (0).
12. Replace ECT sensor 1 (see page 11-233).
13. Turn the ignition switch to ON (II).
14. Reset the PCM with the HDS.
15. Do the PCM idle learn procedure (see page 11-333).
16. Check for Temporary DTCs or DTCs with the HDS.

    Is DTC P0116 indicated?

    YES△Check for poor connections or loose terminals at ECT sensor 1 and the PCM, then go to step 1.

    NO△Troubleshooting is complete. If any other Temporary DTCs or DTCs are indicated, go to the indicated DTC's troubleshooting.■

DTC P0117: ECT Sensor 1 Circuit Low Voltage

NOTE: Before you troubleshoot, record all freeze data and any on-board snapshot, and review the general troubleshooting information (see page 11-3).

1. Turn the ignition switch to ON (II).

2. Check ECT SENSOR 1 in the DATA LIST with the HDS.

   Is about 356 °F (180 °C) or more, or 0.08 V or less indicated?

   YES△Go to step 3.

   NO△Intermittent failure, the system is OK at this time. Check for poor connections or loose terminals at ECT sensor 1 and the PCM.■

3. Turn the ignition switch to LOCK (0).

4. Disconnect ECT sensor 1 2P connector.

5. Turn the ignition switch to ON (II).

6. Check ECT SENSOR 1 in the DATA LIST with the HDS.

   Is about 356 °F (180 °C) or more, or 0.08 V or less indicated?

   YES△Go to step 7.

   NO△Go to step 11.

7. Turn the ignition switch to LOCK (0).

8. Jump the SCS line with the HDS.

9. Disconnect PCM connector B (44P).

10. Check for continuity between ECT sensor 1 2P connector terminal No. 2 and body ground.

ECT SENSOR 1 2P CONNECTOR

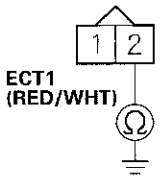

Wire side of female terminals

Is there continuity?

YES△Repair short in the wire between ECT sensor 1 and the PCM (B23), then go to step 13.

NO△Go to step 18.

11. Turn the ignition switch to LOCK (0).

12. Replace ECT sensor 1 (see page 11-233).

13. Reconnect all connectors.

14. Turn the ignition switch to ON (II).

15. Reset the PCM with the HDS.

16. Do the PCM idle learn procedure (see page 11-333).

17. Check for Temporary DTCs or DTCs with the HDS.

    Is DTC P0117 indicated?

    YES△Check for poor connections or loose terminals at ECT sensor 1 and the PCM, then go to step 1.

    NO△Troubleshooting is complete. If any other Temporary DTCs or DTCs are indicated, go to the indicated DTC's troubleshooting.■

(cont'd)

DTC Troubleshooting (cont'd)

18. Reconnect all connectors.

19. Update the PCM if it does not have the latest software (see page 11-236), or substitute a known-good PCM (see page 11-7).

20. Check for Temporary DTCs or DTCs with the HDS.

    Is DTC P0117 indicated?

    YES△Check for poor connections or loose terminals at ECT sensor 1 and the PCM. If the PCM was updated, substitute a known-good PCM (see page 11-7), then recheck. If the PCM was substituted, go to step 1.

    NO△If the PCM was updated, troubleshooting is complete. If the PCM was substituted, replace the original PCM (see page 11-238). If any other Temporary DTCs or DTCs are indicated, go to the indicated DTC's troubleshooting.■

DTC P0118: ECT Sensor 1 Circuit High Voltage

NOTE: Before you troubleshoot, record all freeze data and any on-board snapshot, and review the general troubleshooting information (see page 11-3).

1. Turn the ignition switch to ON (II).

2. Check ECT SENSOR 1 in the DATA LIST with the HDS.

   Is about −40 °F (−40 °C) or less, or 4.92 V or more indicated?

   YES△Go to step 3.

   NO△Intermittent failure, the system is OK at this time. Check for poor connections or loose terminals at ECT sensor 1 and the PCM.■

3. Turn the ignition switch to LOCK (0).

4. Disconnect ECT sensor 1 2P connector.

5. Connect ECT sensor 1 2P connector terminals No. 1 and No. 2 with a jumper wire.

ECT SENSOR 1 2P CONNECTOR

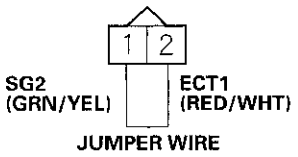

Wire side of female terminals

6. Turn the ignition switch to ON (II).

7. Check ECT SENSOR 1 in the DATA LIST with the HDS.

   Is about −40 °F (−40 °C) or less, or 4.92 V or more indicated?

   YES△Go to step 8.

   NO△Go to step 20.

8. Turn the ignition switch to LOCK (0).

9. Remove the jumper wire from ECT sensor 1 2P connector.

10. Turn the ignition switch to ON (II).

11. Measure the voltage between ECT sensor 1 2P connector terminal No. 2 and body ground.

ECT SENSOR 1 2P CONNECTOR

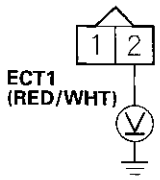

Wire side of female terminals

Is there about 5 V?

YES△Go to step 12.

NO△Go to step 16.

12. Turn the ignition switch to LOCK (0).

13. Jump the SCS line with the HDS.

14. Disconnect PCM connector B (44P).

15. Check for continuity between ECT sensor 1 2P connector terminal No. 1 and PCM connector terminal B33.

ECT SENSOR 1 2P CONNECTOR

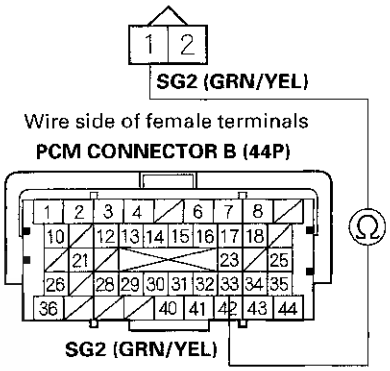

Is there continuity?

YES△Go to step 27.

NO△Repair open in the wire between the PCM (B33) and ECT sensor 1, then go to step 22.

(cont'd)

DTC Troubleshooting (cont'd)

16. Turn the ignition switch to LOCK (0).

17. Jump the SCS line with the HDS.

18. Disconnect PCM connector B (44P).

19. Check for continuity between ECT sensor 1 2P connector terminal No. 2 and PCM connector terminal B23.

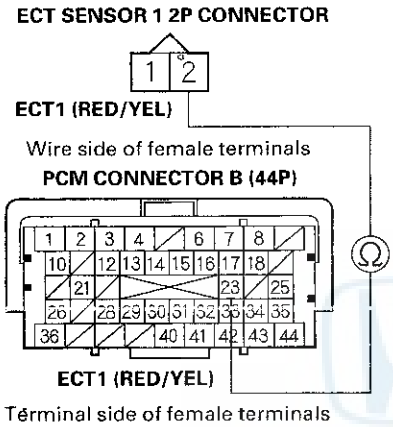

Is there continuity?

YES△Go to step 27.

NO△Repair open in the wire between the PCM (B23) and ECT sensor 1, then go to step 22.

20. Turn the ignition switch to LOCK (0).

21. Replace ECT sensor 1 (see page 11-233).

22. Reconnect all connectors.

23. Turn the ignition switch to ON (II).

24. Reset the PCM with the HDS.

25. Do the PCM idle learn procedure (see page 11-333).

26. Check for Temporary DTCs or DTCs with the HDS.

Is DTC P0118 indicated?

YES△Check for poor connections or loose terminals at ECT sensor 1 and the PCM, then go to step 1.

NO△Troubleshooting is complete. If any other Temporary DTCs or DTCs are indicated, go to the indicated DTC's troubleshooting.■

27. Reconnect all connectors.

28. Update the PCM if it does not have the latest software (see page 11-236), or substitute a known-good PCM (see page 11-7).

29. Check for Temporary DTCs or DTCs with the HDS.

Is DTC P0118 indicated?

YES△Check for poor connections or loose terminals at ECT sensor 1 and the PCM. If the PCM was updated, substitute a known-good PCM (see page 11-7), then recheck. If the PCM was substituted, go to step 1.

NO△If the PCM was updated, troubleshooting is complete. If the PCM was substituted, replace the original PCM (see page 11-238). If any other Temporary DTCs or DTCs are indicated, go to the indicated DTC's troubleshooting.■

DTC P0125: ECT Sensor 1 Malfunction/Slow Response

NOTE: Before you troubleshoot, record all freeze data and any on-board snapshot, and review the general troubleshooting information (see page 11-3).

1. Start the engine, and let it idle for 5 minutes or more.

2. Check ECT SENSOR 1 in the DATA LIST with the HDS.

   Is about 0 °F (−18 °C) or less indicated?

   YES△Check for poor connections or loose terminals at ECT sensor 1, ECT sensor 2, and the PCM. If the connections and terminals are OK, replace ECT sensor 1 (see page 11-233).

   NO△Go to step 3.

3. Turn the ignition switch to LOCK (0).

4. Allow the engine to cool to 104 °F (40 °C) or less.

5. Make sure the temperature difference between ECT SENSOR 1 and ECT SENSOR 2 is about 50 °F (10 °C) in the DATA LIST with the HDS.

6. Start the engine, and let it idle until ECT SENSOR 1 goes up to about 158 °F (70 °C).

   Does ECT SENSOR 2 also show about 158 °F (70 °C)?

   YES△Go to step 7.

   NO△Intermittent failure, the system is OK at this time. Check for poor connections or loose terminals at ECT sensor 1, ECT sensor 2, and the PCM. ■

7. Check the thermostat (see page 10-4).

   Is the thermostat OK?

   YES△Check for poor connections or loose terminals at ECT sensor 1, ECT sensor 2, and the PCM. If the connections and terminals are OK, replace ECT sensor 1 (see page 11-233), then go to step 8.

   NO△Replace the thermostat (see page 10-8), then go to step 8.

8. Turn the ignition switch to LOCK (0).

9. Allow the engine to cool to 104 °F (40 °C) or less.

10. Check the temperature difference between ECT SENSOR 1 and ECT SENSOR 2 is about 50 °F (10 °C) in the DATA LIST with the HDS.

11. Start the engine, and let it idle until ECT SENSOR 1 goes up to about 158 °F (70 °C).

    Does ECT SENSOR 2 also show about 158 °F (70 °C)?

    YES△Go to step 1 and recheck.

    NO△Troubleshooting is complete. ■

DTC Troubleshooting (cont'd)

DTC P0128: Cooling System Malfunction

NOTE: Before you troubleshoot, record all freeze data and any on-board snapshot, and review the general troubleshooting information (see page 11-3).

1. Turn the ignition switch to ON (II).
2. Clear the DTC with the HDS.
3. Turn the blower switch to LOCK (0).
4. Check the FAN CTRL in the DATA LIST with the HDS.

   Is it OFF?

   YES△Go to step 5.

   NO△Wait until the FAN CTRL is off, then go to step 6.

5. Check the radiator fan operation.

   Does the radiator fan keep running?

   YES△Check the radiator fan circuit (see page 10-19), and the radiator fan relay (see page 22-64). If the circuits and the relay are OK, go to step 19.

   NO△Go to step 6.

6. Let the engine cool until the coolant temperature is 104 °F (40 °C) or less.
7. Note the value of ECT SENSOR 1 and ECT SENSOR 2 in the DATA LIST with the HDS.
8. Start the engine, and let it idle.
9. Let the engine idle until ECT SENSOR 1 goes up 36 °F (20 °C) or more from the recorded temperature.
10. Check ECT SENSOR 2 in the DATA LIST with the HDS.
11. Compare the value of the recorded ECT SENSOR 2 and the present value of ECT SENSOR 2.

    Did temperature rise 16 °F (9 °C) or more?

    YES△Intermittent failure, the system is OK at this time. Check for poor connections or loose terminals at ECT sensor 1, ECT sensor 2, and the PCM. ■

    NO△Test the thermostat (see page 10-4), then go to step 12.

12. Turn the ignition switch to ON (II).
13. Reset the PCM with the HDS.
14. Let the engine cool until the coolant temperature is between 21 °F (−6 °C) and 104 °F (40 °C).
15. Do the PCM idle learn procedure (see page 11-333).
16. Test-drive at a steady speed between 15—75 mph (24—120 km/h) for 10 minutes.
17. Check for Temporary DTCs or DTCs with the HDS.

    Is DTC P0128 indicated?

    YES△Check the cooling system, then go to step 1.

    NO△Go to step 18.

18. Monitor the OBD STATUS for DTC P0128 in the DTCs MENU with the HDS.

    Does the screen indicate PASSED?

    YES△Troubleshooting is complete. If any other Temporary DTCs or DTCs were indicated in step 17, go to the indicated DTC's troubleshooting. ■

    NO△If the screen indicates FAILED, check the cooling system, then go to step 1. If the screen indicates NOT COMPLETED, go to step 14.

19. Update the PCM if it does not have the latest software (see page 11-236), or substitute a known-good PCM (see page 11-7).

20. Let the engine cool until the coolant temperature is between 21 °F (−6 °C) and 104 °F (40 °C).

21. Start the engine. Hold the engine speed at 3,000 rpm without load (in P or N) until the radiator fan comes on, then let it idle.

22. Test-drive at a steady speed between 15—75 mph (24—120 km/h) for 10 minutes.

23. Check for Temporary DTCs or DTCs with the HDS.

    Is DTC P0128 indicated?

    YES△Check for poor connections or loose terminals at ECT sensor 1, ECT sensor 2, and the PCM. If the PCM was updated, substitute a known-good PCM (see page 11-7), then go to step 20. If the PCM was substituted, go to step 1.

    NO△Go to step 24.

24. Monitor the OBD STATUS for DTC P0128 in the DTCs MENU with the HDS.

    Does the screen indicate PASSED?

    YES△If the PCM was updated, troubleshooting is complete. If the PCM was substituted, replace the original PCM (see page 11-238). If any other Temporary DTCs or DTCs were indicated in step 23, go to the indicated DTC's troubleshooting. ■

    NO△If the screen indicates FAILED, check for poor connections or loose terminals at ECT sensor 1, ECT sensor 2, and the PCM. If the PCM was updated, substitute a known-good PCM (see page 11-7), then go to step 20. If the PCM was substituted, go to step 1. If the screen indicates NOT COMPLETED, go to step 20.

DTC P0133: A/F Sensor (Sensor 1) Malfunction/Slow Response

NOTE:
- Before you troubleshoot, record all freeze data and any on-board snapshot, and review the general troubleshooting information (see page 11-3).
- If DTC P0139 is stored at the same time as DTC P0133, troubleshoot DTC P0139 first, then recheck for DTC P0133.

1. Turn the ignition switch to ON (II).

2. Clear the DTC with the HDS.

3. Start the engine. Hold the engine speed at 3,000 rpm without load (in P or N) until the radiator fan comes on, then let it idle.

4. Test-drive under these conditions:

   - Engine coolant temperature (ECT SENSOR 1) above 176 °F (80 °C)
   - Transmission in D
   - Drive the vehicle at 25 mph (40 km/h) or less for 5 minutes, then drive at a steady speed between 26—81 mph (41—130 km/h).

5. Monitor the OBD STATUS for DTC P0133 in the DTCs MENU with the HDS.

   Does the screen indicate FAILED?

   YES△Go to step 6.

   NO△If the screen indicates PASSED, intermittent failure, the system is OK at this time. Check for poor connections or loose terminals at the A/F sensor (Sensor 1) and the PCM. If the screen indicates EXECUTING, keep driving until a result comes on. If the screen indicates OUT OF CONDITION, go to step 3 and recheck.

6. Turn the ignition switch to LOCK (0).

7. Replace the A/F sensor (Sensor 1) (see page 11-230).

8. Turn the ignition switch to ON (II).

9. Reset the PCM with the HDS.

(cont'd)

DTC Troubleshooting (cont'd)

10. Do the PCM idle learn procedure (see page 11-333).

11. Start the engine. Hold the engine speed at 3,000 rpm without load (in P or N) until the radiator fan comes on, then let it idle.

12. Test-drive under these conditions:

    - Engine coolant temperature (ECT SENSOR 1) above 176 °F (80 °C)
    - Transmission in D
    - Drive the vehicle at 25 mph (40 km/h) or less for 5 minutes, then drive at a steady speed between 26—81 mph (41—130 km/h).

13. Check for Temporary DTCs or DTCs with the HDS.

    Is DTC P0133 indicated?

    YES△Check for poor connections or loose terminals at the A/F sensor (Sensor 1) and the PCM, then go to step 1.

    NO△Go to step 14.

14. Monitor the OBD STATUS for DTC P0133 in the DTCs MENU with the HDS.

    Does the screen indicate PASSED?

    YES△Troubleshooting is complete. If any other Temporary DTCs or DTCs were indicated in step 13, go to the indicated DTC's troubleshooting.■

    NO△If the screen indicates FAILED, check for poor connections or loose terminals at the A/F sensor (Sensor 1) and the PCM, then go to step 1. If the screen indicates EXECUTING, keep driving until a result comes on. If the screen indicates OUT OF CONDITION, go to step 11.

DTC P0134: A/F Sensor (Sensor 1) Heater System Malfunction

NOTE:
- Before you troubleshoot, record all freeze data and any on-board snapshot, and review the general troubleshooting information (see page 11-3).
- If DTC P0135 is stored at the same time as DTC P0134, troubleshoot DTC P0135 first, then recheck for DTC P0134.

1. Turn the ignition switch to ON (II).

2. Clear the DTC with the HDS.

3. Start the engine, and let it idle without load (in P or N), until the radiator fan comes on.

4. Check for Temporary DTCs or DTCs with the HDS.

   Is DTC P0134 indicated?

   YES△Go to step 5.

   NO△Intermittent failure, the system is OK at this time. Check for poor connections or loose terminals at the A/F sensor (Sensor 1), the PGM-FI subrelay, and the PCM.■

5. Turn the ignition switch to LOCK (0).

6. Replace the A/F sensor (Sensor 1) (see page 11-230).

7. Turn the ignition switch to ON (II).

8. Reset the PCM with the HDS.

9. Do the PCM idle learn procedure (see page 11-333).

10. Check for Temporary DTCs or DTCs with the HDS.

    Is DTC P0134 indicated?

    YES△Check for poor connections or loose terminals at the A/F sensor (Sensor 1), the PGM-FI subrelay, and the PCM, then go to step 1.

    NO△Go to step 11.

11. Monitor the OBD STATUS for DTC P0134 in the DTCs MENU with the HDS.

    Does the screen indicate PASSED?

    YES△Troubleshooting is complete. If any other Temporary DTCs or DTCs were indicated in step 10, go to the indicated DTC's troubleshooting.■

    NO△If the screen indicates FAILED, check for poor connections or loose terminals at the A/F sensor (Sensor 1), the PGM-FI subrelay, and the PCM, then go to step 1. If the screen indicates NOT COMPLETED, keep idling until a result comes on.

DTC P0135: A/F Sensor (Sensor 1) Heater Circuit Malfunction

NOTE: Before you troubleshoot, record all freeze data and any on-board snapshot, and review the general troubleshooting information (see page 11-3).

1. Turn the ignition switch to ON (II).

2. Clear the DTC with the HDS.

3. Start the engine. Hold the engine speed at 3,000 rpm without load (in P or N) until the radiator fan comes on, then let it idle.

4. Check for Temporary DTCs or DTCs with the HDS.

   Is DTC P0135 indicated?

   YES△Go to step 5.

   NO△Intermittent failure, the system is OK at this time. Check for poor connections or loose terminals at the A/F sensor (Sensor 1), the PGM-FI subrelay, and the PCM.■

5. Turn the ignition switch to LOCK (0).

6. Check the No. 11 FI SUB (15 A) fuse in the under-hood fuse/relay box.

   Is the fuse OK?

   YES△Go to step 7.

   NO△Go to step 18.

(cont'd)

DTC Troubleshooting (cont'd)

7. Test the PGM-FI subrelay (E) in the under-hood fuse/relay box (see page 22-64).

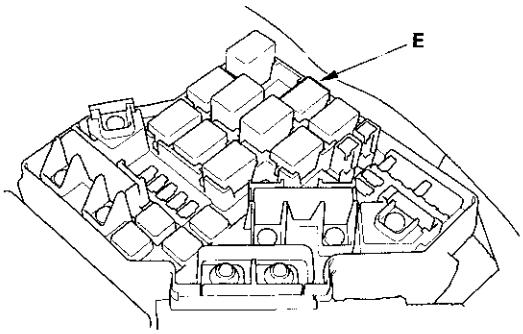

Is the PGM-FI subrelay OK?

YES△Go to step 8.

NO△Replace the PGM-FI subrelay, then go to step 23.

8. Disconnect the A/F sensor (Sensor 1) 4P connector.

9. At the sensor side, measure the resistance between A/F sensor (Sensor 1) 4P connector terminals No. 3 and No. 4.

A/F SENSOR (SENSOR 1) 4P CONNECTOR

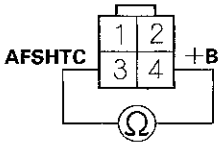

Wire side of female terminals

Is there 2.2–2.7 Ω at room temperature?

YES△Go to step 10.

NO△Go to step 22.

10. At the sensor side, check for continuity between A/F sensor (Sensor 1) 4P connector terminals No. 1 and No. 3, and between terminals No. 1 and No. 4 individually.

A/F SENSOR (SENSOR 1) 4P CONNECTOR

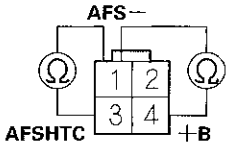

Wire side of female terminals

Is there continuity?

YES△Go to step 22.

NO△Go to step 11.

11. Jump the SCS line with the HDS.

12. Disconnect PCM connector C (44P).

13. Check for continuity between A/F sensor (Sensor 1) 4P connector terminal No. 3 and PCM connector terminal C9.

A/F SENSOR (SENSOR 1) 4P CONNECTOR

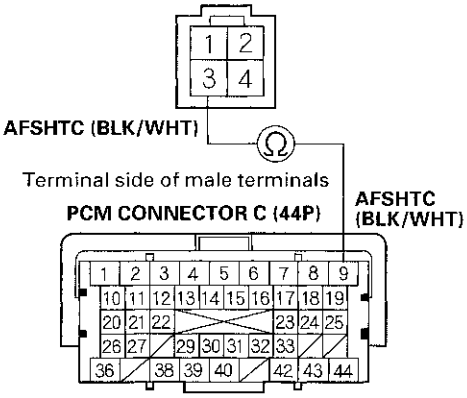

Terminal side of female terminals

Is there continuity?

YES△Go to step 14.

NO△Repair open in the wire between the PCM (C9) and the A/F sensor (Sensor 1), then go to step 23.

14. Remove the PGM-FI subrelay (E) from the under-hood fuse/relay box.

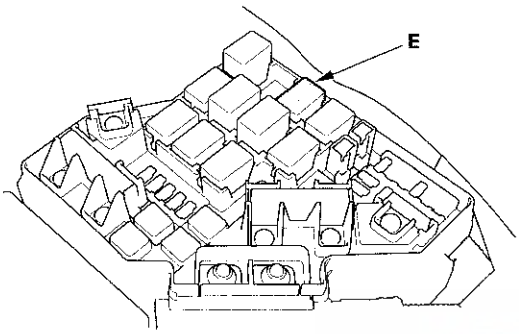

15. Check for continuity between A/F sensor (Sensor 1) 4P connector terminal No. 4 and PGM-FI subrelay 4P connector terminal No. 2.

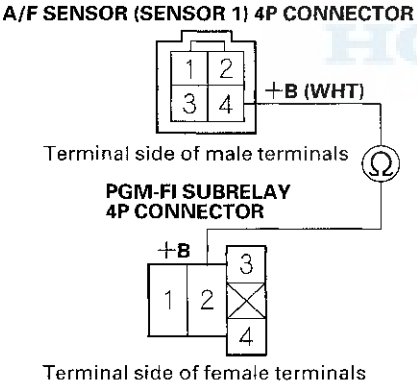

Is there continuity?

YES△Go to step 16.

NO△Repair open in the wire between the A/F sensor (Sensor 1) and the PGM-FI subrelay, then go to step 23.

16. Disconnect PCM connector A (44P).

17. Check for continuity between PGM-FI subrelay 4P connector terminal No. 3 and PCM connector terminal A21.

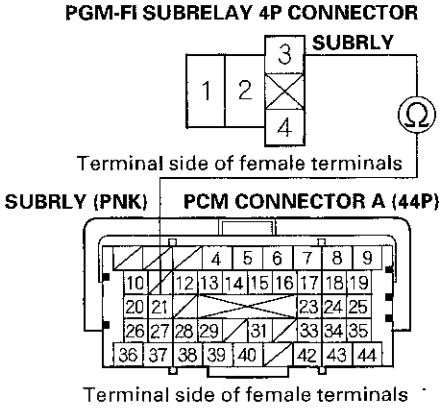

Is there continuity?

YES△Go to step 29.

NO△Repair open in the wire between the PCM (A21) and the PGM-FI subrelay, then go to step 23.

HONDA

(cont'd)

DTC Troubleshooting (cont'd)

18. Remove the PGM-FI subrelay (E) from the under-hood fuse/relay box.

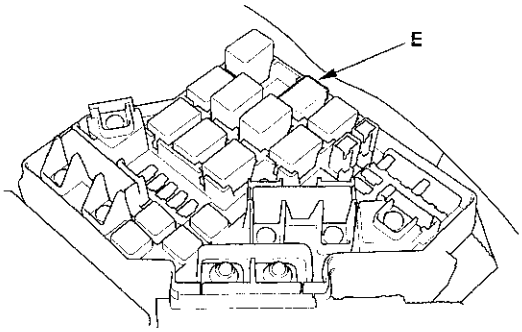

19. Disconnect the A/F sensor (Sensor 1) 4P connector.

20. Disconnect the EVAP canister vent shut valve 2P connector.

21. Check for continuity between A/F sensor (Sensor 1) 4P connector terminal No. 4 and body ground.

A/F SENSOR (SENSOR 1) 4P CONNECTOR

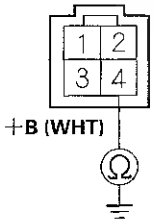

Terminal side of male terminals

Is there continuity?

YES△Repair short in the wire between the PGM-FI subrelay and the A/F sensor (Sensor 1), and the EVAP canister vent shut valve. Also replace the No. 11 FI SUB (15 A) fuse, then go to step 23.

NO△Replace the under-hood fuse/relay box (see page 22-59), then go to step 23.

22. Replace the A/F sensor (Sensor 1) (see page 11-230).

23. Reconnect all connectors.

24. Turn the ignition switch to ON (II).

25. Reset the PCM with the HDS.

26. Do the PCM idle learn procedure (see page 11-333).

27. Check for Temporary DTCs or DTCs with the HDS.

Is DTC P0135 indicated?

YES△Check for poor connections or loose terminals at the A/F sensor (Sensor 1), the PGM-FI subrelay, and the PCM, then go to step 1.

NO△Go to step 28.

28. Monitor the OBD STATUS for DTC P0135 in the DTCs MENU with the HDS.

Does the screen indicate PASSED?

YES△Troubleshooting is complete. If any other Temporary DTCs or DTCs were indicated in step 27, go to the indicated DTC's troubleshooting. ■

NO△If the screen indicates FAILED, check for poor connections or loose terminals at the A/F sensor (Sensor 1), the PGM-FI subrelay, and the PCM, then go to step 1. If the screen indicates NOT COMPLETED, keep idling until a result comes on.

29. Reconnect all connectors.

30. Update the PCM if it does not have the latest software (see page 11-236), or substitute a known-good PCM (see page 11-7).

31. Start the engine, and let it idle.

32. Check for Temporary DTCs or DTCs with the HDS.

    Is DTC P0135 indicated?

    YES△Check for poor connections or loose terminals at the A/F sensor (Sensor 1), the PGM-FI subrelay, and the PCM. If the PCM was updated, substitute a known-good PCM (see page 11-7), then go to step 31. If the PCM was substituted, go to step 1.

    NO△Go to step 33.

33. Monitor the OBD STATUS for DTC P0135 in the DTCs MENU with the HDS.

    Does the screen indicate PASSED?

    YES△If the PCM was updated, troubleshooting is complete. If the PCM was substituted, replace the original PCM (see page 11-238). If any other Temporary DTCs or DTCs were indicated in step 32, go to the indicated DTC's troubleshooting.■

    NO△If the screen indicates FAILED, check for poor connections or loose terminals at the A/F sensor (Sensor 1), the PGM-FI subrelay, and the PCM. If the PCM was updated, substitute a known-good PCM (see page 11-7), then go to step 31. If the PCM was substituted, go to step 1. If the screen indicates NOT COMPLETED, keep idling until a result comes on.

DTC P0137: Secondary HO2S (Sensor 2) Circuit Low Voltage

NOTE:
- Before you troubleshoot, record all freeze data and any on-board snapshot, and review the general troubleshooting information (see page 11-3).
- Information marked with an asterisk (*) applies to the '07-09 models.

1. Turn the ignition switch to ON (II).

2. Clear the DTC with the HDS.

3. Start the engine. Hold the engine speed at 3,000 rpm without load (in P or N) until the radiator fan comes on, then let it idle.

4. Check the HO2S S2 in the DATA LIST with the HDS.

   Does the voltage stay at 0.29 (0.05) V or less?*

   YES△Go to step 5.

   NO△Intermittent failure, the system is OK at this time. Check for poor connections or loose terminals at the secondary HO2S (Sensor 2) and the PCM.■

5. Turn the ignition switch to LOCK (0).

6. Disconnect the secondary HO2S (Sensor 2) 4P connector.

7. Turn the ignition switch to ON (II).

8. Check the HO2S S2 in the DATA LIST with the HDS.

   Does the voltage stay at 0.29 (0.05) V or less?*

   YES△Go to step 9.

   NO△Go to step 13.

9. Turn the ignition switch to LOCK (0).

10. Jump the SCS line with the HDS.

11. Disconnect PCM connector C (44P).

(cont'd)

DTC Troubleshooting (cont'd)

12. Check for continuity between secondary HO2S (Sensor 2) 4P connector terminal No. 1 and body ground.

SECONDARY HO2S (SENSOR 2) 4P CONNECTOR

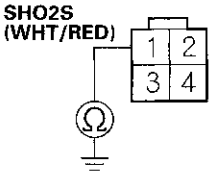

Wire side of female terminals

Is there continuity?

YES△Repair short in the wire between the PCM (C27) and the secondary HO2S (Sensor 2), then go to step 15.

NO△Go to step 23.

13. Turn the ignition switch to LOCK (0).

14. Replace the secondary HO2S (Sensor 2) (see page 11-230).

15. Reconnect all connectors.

16. Turn the ignition switch to ON (II).

17. Reset the PCM with the HDS.

18. Do the PCM idle learn procedure (see page 11-333).

19. Start the engine, and let it idle without load (in P or N) until the radiator fan comes on.

20. Test-drive under these conditions:

- Engine coolant temperature (ECT SENSOR 1) above 158 °F (70 °C)
- Transmission in D
- ENGINE SPEED between 1,500—3,000 rpm
- Drive 1 minute or more

21. Check for Temporary DTCs or DTCs with the HDS.

Is DTC P0137 indicated?

YES△Check for poor connections or loose terminals at the secondary HO2S (Sensor 2) and the PCM, then go to step 1.

NO△Go to step 22.

22. Monitor the OBD STATUS for DTC P0137 in the DTCs MENU with the HDS.

Does the screen indicate PASSED?

YES△Troubleshooting is complete. If any other Temporary DTCs or DTCs were indicated in step 21, go to the indicated DTC's troubleshooting.■

NO△If the screen indicates FAILED, check for poor connections or loose terminals at the secondary HO2S (Sensor 2) and the PCM, then go to step 1. If the screen indicates EXECUTING, keep driving until a result comes on. If the screen indicates OUT OF CONDITION, go to step 19.

23. Reconnect all connectors.

24. Update the PCM if it does not have the latest software (see page 11-236), or substitute a known-good PCM (see page 11-7).

25. Start the engine, and let it idle without load (in P or N) until the radiator fan comes on.

26. Test-drive under these conditions:

    - Engine coolant temperature (ECT SENSOR 1) above 158 °F (70 °C)
    - Transmission in D
    - ENGINE SPEED between 1,500—3,000 rpm
    - Drive 1 minute or more

27. Check for Temporary DTCs or DTCs with the HDS.

    Is DTC P0137 indicated?

    YES△Check for poor connections or loose terminals at the secondary HO2S (Sensor 2) and the PCM. If the PCM was updated, substitute a known-good PCM (see page 11-7), then go to step 25. If the PCM was substituted, go to step 1.

    NO△Go to step 28.

28. Monitor the OBD STATUS for DTC P0137 in the DTCs MENU with the HDS.

    Does the screen indicate PASSED?

    YES△If the PCM was updated, troubleshooting is complete. If the PCM was substituted, replace the original PCM (see page 11-238). If any other Temporary DTCs or DTCs were indicated in step 27, go to the indicated DTC's troubleshooting.■

    NO△If the screen indicates FAILED, check for poor connections or loose terminals at the secondary HO2S (Sensor 2) and the PCM. If the PCM was updated, substitute a known-good PCM (see page 11-7), then go to step 25. If the PCM was substituted, go to step 1. If the screen indicates EXECUTING, keep driving until a result comes on. If the screen indicates OUT OF CONDITION, go to step 25.

DTC P0138: Secondary HO2S (Sensor 2) Circuit High Voltage

NOTE: Before you troubleshoot, record all freeze data and any on-board snapshot, and review the general troubleshooting information (see page 11-3).

1. Turn the ignition switch to ON (II).

2. Clear the DTC with the HDS.

3. Start the engine. Hold the engine speed at 3,000 rpm without load (in P or N) until the radiator fan comes on, then let it idle.

4. Check the HO2S S2 in the DATA LIST with the HDS.

   Does the voltage stay at 1.27 V or more?

   YES△Go to step 5.

   NO△Intermittent failure, the system is OK at this time. Check for poor connections or loose terminals at the secondary HO2S (Sensor 2) and the PCM.■

5. Turn the ignition switch to LOCK (0).

6. Disconnect the secondary HO2S (Sensor 2) 4P connector.

7. Connect secondary HO2S (Sensor 2) 4P connector terminals No. 1 and No. 2 with a jumper wire.

SECONDARY HO2S (SENSOR 2) 4P CONNECTOR

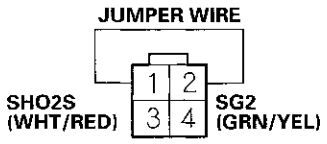

Wire side of female terminals

(cont'd)

DTC Troubleshooting (cont'd)

8. Turn the ignition switch to ON (II).
9. Check the HO2S S2 in the DATA LIST with the HDS.

   Does the voltage stay at 1.27 V or more?

   YES△Go to step 10.

   NO△Go to step 19.
10. Turn the ignition switch to LOCK (0).
11. Remove the jumper wire from the secondary HO2S (Sensor 2) 4P connector.
12. Connect secondary HO2S (Sensor 2) 4P connector terminal No. 1 to body ground with a jumper wire.

SECONDARY HO2S (SENSOR 2) 4P CONNECTOR

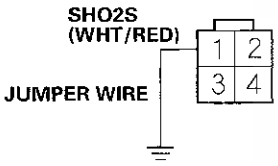

Wire side of female terminals

13. Turn the ignition switch to ON (II).
14. Check the HO2S S2 in the DATA LIST with the HDS.

    Does the voltage stay at 1.27 V or more?

    YES△Go to step 15.

    NO△Repair open in the wire between the PCM (B33) and the secondary HO2S (Sensor 2), then go to step 21.
15. Turn the ignition switch to LOCK (0).
16. Jump the SCS line with the HDS.
17. Disconnect PCM connector C (44P).
18. Check for continuity between PCM connector terminal C27 and body ground.

PCM CONNECTOR C (44P)

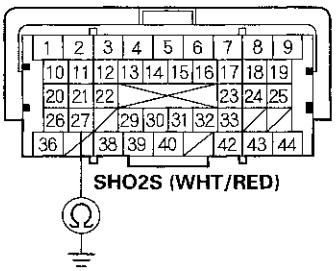

Terminal side of female terminals

Is there continuity?

YES△Go to step 29.

NO△Repair open in the wire between the PCM (C27) and the secondary HO2S (Sensor 2), then go to step 21.

19. Turn the ignition switch to LOCK (0).
20. Replace the secondary HO2S (Sensor 2) (see page 11-230).
21. Reconnect all connectors.
22. Turn the ignition switch to ON (II).
23. Reset the PCM with the HDS.
24. Do the PCM idle learn procedure (see page 11-333).

25. Start the engine. Hold the engine speed at 3,000 rpm without load (in P or N) until the radiator fan comes on, then let it idle.

26. Test-drive under these conditions:

    - Engine coolant temperature (ECT SENSOR 1) above 158 °F (70 °C)
    - Transmission in D
    - Engine speed between 1,500—3,000 rpm
    - Drive about 1 minute or more

27. Check for Temporary DTCs or DTCs with the HDS.

    Is DTC P0138 indicated?

    YES△Check for poor connections or loose terminals at the secondary HO2S (Sensor 2) and the PCM, then go to step 1.

    NO△Go to step 28.

28. Monitor the OBD STATUS for DTC P0138 in the DTCs MENU with the HDS.

    Does the screen indicate PASSED?

    YES△Troubleshooting is complete. If any other Temporary DTCs or DTCs were indicated in step 27, go to the indicated DTC's troubleshooting.■

    NO△If the screen indicates FAILED, check for poor connections or loose terminals at the secondary HO2S (Sensor 2) and the PCM, then go to step 1. If the screen indicates EXECUTING, keep driving until a result comes on. If the screen indicates OUT OF CONDITION, go to step 25.

29. Reconnect all connectors.

30. Update the PCM if it does not have the latest software (see page 11-236), or substitute a known-good PCM (see page 11-7).

31. Start the engine, and let it idle without load (in P or N) until the radiator fan comes on.

32. Test-drive under these conditions:

    - Engine coolant temperature (ECT SENSOR 1) above 158 °F (70 °C)
    - Transmission in D
    - Engine speed between 1,500—3,000 rpm
    - Drive about 1 minute or more

33. Check for Temporary DTCs or DTCs with the HDS.

    Is DTC P0138 indicated?

    YES△Check for poor connections or loose terminals at the secondary HO2S (Sensor 2) and the PCM. If the PCM was updated, substitute a known-good PCM (see page 11-7), then go to step 31. If the PCM was substituted, go to step 1.

    NO△Go to step 34.

34. Monitor the OBD STATUS for DTC P0138 in the DTCs MENU with the HDS.

    Does the screen indicate PASSED?

    YES△If the PCM was updated, troubleshooting is complete. If the PCM was substituted, replace the original PCM (see page 11-238). If any other Temporary DTCs or DTCs were indicated in step 33, go to the indicated DTC's troubleshooting.■

    NO△If the screen indicates FAILED, check for poor connections or loose terminals at the secondary HO2S (Sensor 2) and the PCM. If the PCM was updated, substitute a known-good PCM (see page 11-7), then go to step 31. If the PCM was substituted, go to step 1. If the screen indicates EXECUTING, keep driving until a result comes on. If the screen indicates OUT OF CONDITION, go to step 31.

DTC Troubleshooting (cont'd)

DTC P0139: Secondary HO2S (Sensor 2) Slow Response

NOTE: Before you troubleshoot, record all freeze data and any on-board snapshot, and review the general troubleshooting information (see page 11-3).

1. Turn the ignition switch to ON (II).

2. Clear the DTC with the HDS.

3. Start the engine. Hold the engine speed at 3,000 rpm without load (in P or N) until the radiator fan comes on, then let it idle.

4. Test-drive under these conditions:

   - Engine coolant temperature (ECT SENSOR 1) above 158 °F (70 °C)
   - Transmission in D
   - Vehicle speed at 35 mph (56 km/h) or more
   - Drive 20 seconds

5. Monitor the OBD STATUS for DTC P0139 in the DTCs MENU with the HDS.

   Does the screen indicate FAILED?

   YES△Go to step 6.

   NO△If the screen indicates PASSED, intermittent failure, the system is OK at this time. Check for poor connections or loose terminals at the secondary HO2S (Sensor 2) and the PCM. If the screen indicates EXECUTING, keep driving until a result comes on. If the screen indicates OUT OF CONDITION, go to step 3 and recheck.

6. Turn the ignition switch to LOCK (0).

7. Replace the secondary HO2S (Sensor 2) (see page 11-230).

8. Turn the ignition switch to ON (II).

9. Reset the PCM with the HDS.

10. Do the PCM idle learn procedure (see page 11-333).

11. Start the engine. Hold the engine speed at 3,000 rpm without load (in P or N) until the radiator fan comes on, then let it idle.

12. Test-drive under these conditions:

    - Engine coolant temperature (ECT SENSOR 1) above 158 °F (70 °C)
    - Transmission in D
    - Vehicle speed at 35 mph (56 km/h) or more
    - Drive 20 seconds

13. Check for Temporary DTCs or DTCs with the HDS.

    Is DTC P0139 indicated?

    YES△Check for poor connections or loose terminals at the secondary HO2S (Sensor 2) and the PCM, then go to step 1.

    NO△Go to step 14.

14. Monitor the OBD STATUS for DTC P0139 in the DTCs MENU with the HDS.

    Does the screen indicate PASSED?

    YES△Troubleshooting is complete. If any other Temporary DTCs or DTCs were indicated in step 13, go to the indicated DTC's troubleshooting.■

    NO△If the screen indicates FAILED, check for poor connections or loose terminals at the secondary HO2S (Sensor 2) and the PCM, then go to step 1. If the screen indicates EXECUTING, keep driving until a result comes on. If the screen indicates OUT OF CONDITION, go to step 11.

DTC P0141: Secondary HO2S (Sensor 2) Heater Circuit Malfunction

NOTE: Before you troubleshoot, record all freeze data and any on-board snapshot, and review the general troubleshooting information (see page 11-3).

1. Turn the ignition switch to ON (II).
2. Clear the DTC with the HDS.
3. Start the engine, and let it idle.
4. Check for Temporary DTCs or DTCs with the HDS.

   Is DTC P0141 indicated?

   YES△Go to step 5.

   NO△Intermittent failure, the system is OK at this time. Check for poor connections or loose terminals at the secondary HO2S (Sensor 2) and the PCM. ■

5. Turn the ignition switch to LOCK (0).
6. Check the No. 3 ALTERNATOR (10 A) fuse in the under-dash fuse/relay box.

   Is the fuse OK?

   YES△Go to step 7.

   NO△Repair short in the wire between the secondary HO2S (Sensor 2) and the No. 3 ALTERNATOR (10 A) fuse. Also replace the No. 3 ALTERNATOR (10 A) fuse, then go to step 22.

7. Disconnect the secondary HO2S (Sensor 2) 4P connector.
8. At the secondary HO2S (Sensor 2) side, measure the resistance between secondary HO2S (Sensor 2) 4P connector terminals No. 3 and No. 4.

SECONDARY HO2S (SENSOR 2) 4P CONNECTOR

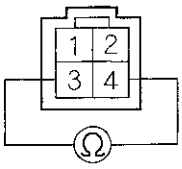

Terminal side of male terminals

Is there 5.4--7.3 Ω at room temperature?

YES△Go to step 9.

NO△Go to step 21.

9. At the secondary HO2S (Sensor 2) side, check for continuity between body ground and secondary HO2S (Sensor 2) 4P connector terminals No. 3 and No. 4 individually.

SECONDARY HO2S (SENSOR 2) 4P CONNECTOR

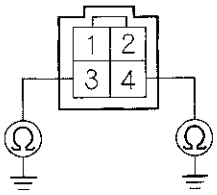

Terminal side of male terminals

Is there continuity?

YES△Go to step 21.

NO△Go to step 10.

(cont'd)

DTC Troubleshooting (cont'd)

10. Turn the ignition switch to ON (II).

11. Measure the voltage between secondary HO2S (Sensor 2) 4P connector terminals No. 3 and No. 4.

SECONDARY HO2S (SENSOR 2) 4P CONNECTOR

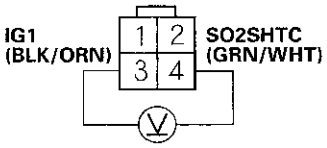

Wire side of female terminals

Is there battery voltage?

YES△Go to step 12.

NO△Go to step 16.

12. Turn the ignition switch to LOCK (0).

13. Jump the SCS line with the HDS.

14. Disconnect PCM connector B (44P).

15. Check for continuity between PCM connector terminal B4 and body ground.

PCM CONNECTOR B (44P)

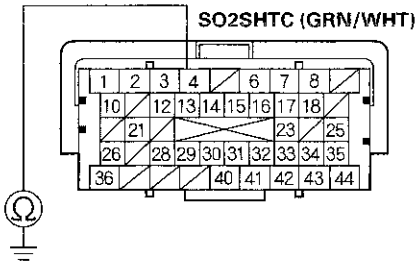

Terminal side of male terminals

Is there continuity?

YES△Repair short in the wire between the PCM (B4) and the secondary HO2S (Sensor 2), then go to step 22.

NO△Go to step 28.

16. Measure the voltage between secondary HO2S (Sensor 2) 4P connector terminal No. 3 and body ground.

SECONDARY HO2S (SENSOR 2) 4P CONNECTOR

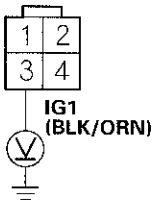

Wire side of female terminals

Is there battery voltage?

YES△Go to step 17.

NO△Repair open in the wire between the secondary HO2S (Sensor 2) and the No. 3 ALTERNATOR (10 A) fuse, then go to step 22.

17. Turn the ignition switch to LOCK (0).

18. Jump the SCS line with the HDS.

19. Disconnect PCM connector B (44P).

20. Check for continuity between secondary HO2S (Sensor 2) 4P connector terminal No. 4 and PCM connector terminal B4.

SECONDARY HO2S (SENSOR 2) 4P CONNECTOR

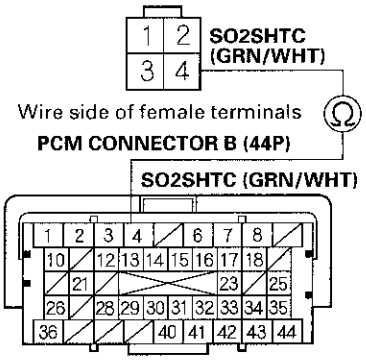

Terminal side of female terminals

Is there continuity?

YES△Go to step 28.

NO△Repair open in the wire between the PCM (B4) and the secondary HO2S (Sensor 2), then go to step 22.

(cont'd)

DTC Troubleshooting (cont'd)

21. Replace the secondary HO2S (Sensor 2) (see page 11-230).

22. Reconnect all connectors.

23. Turn the ignition switch to ON (II).

24. Reset the PCM with the HDS.

25. Do the PCM idle learn procedure (see page 11-333).

26. Check for Temporary DTCs or DTCs with the HDS.

    Is DTC P0141 indicated?

    YES△Check for poor connections or loose terminals at the secondary HO2S (Sensor 2) and the PCM, then go to step 1.

    NO△Go to step 27.

27. Monitor the OBD STATUS for DTC P0141 in the DTCs MENU with the HDS.

    Does the screen indicate PASSED?

    YES△Troubleshooting is complete. If any other Temporary DTCs or DTCs were indicated in step 26, go to the indicated DTC's troubleshooting.■

    NO△If the screen indicates FAILED, check for poor connections or loose terminals at the secondary HO2S (Sensor 2) and the PCM, then go to step 1. If the screen indicates NOT COMPLETED, keep idling until a result comes on.

28. Reconnect all connectors.

29. Update the PCM if it does not have the latest software (see page 11-236), or substitute a known-good PCM (see page 11-7).

30. Start the engine, and let it idle.

31. Check for Temporary DTCs or DTCs with the HDS.

    Is DTC P0141 indicated?

    YES△Check for poor connections or loose terminals at the secondary HO2S (Sensor 2) and the PCM. If the PCM was update, substitute a known-good PCM (see page 11-7), then go to step 30. If the PCM was substitute, go to step 1.

    NO△Go to step 32.

32. Monitor the OBD STATUS for DTC P0141 in the DTCs MENU with the HDS.

    Does the screen indicate PASSED?

    YES△If the PCM was updated, troubleshooting is complete. If the PCM was substituted, replace the original PCM (see page 11-238). If any other Temporary DTCs or DTCs were indicated in step 31, go to the indicated DTC's troubleshooting.■

    NO△If the screen indicates FAILED, check for poor connections or loose terminals at the secondary HO2S (Sensor 2) and the PCM. If the PCM was updated, substitute a known-good PCM (see page 11-7), then go to step 30. If the PCM was substituted, go to step 1. If the screen indicates NOT COMPLETED, keep idling until a result comes on.

DTC P0171: Fuel System Too Lean

DTC P0172: Fuel System Too Rich

NOTE:
- Before you troubleshoot, record all freeze data and any on-board snapshot, and review the general troubleshooting information (see page 11-3).
- If any of the DTCs listed below are indicated at the same time as DTC P0171 and/or P0172, troubleshoot those DTCs first, then recheck for P0171 and/or P0172.

P0101, P0102, P0103: Mass air flow (MAF) sensor
P0106, P0107, P0108: Manifold absolute pressure (MAP) sensor
P0133, P1172, P1157, P2195, P2238, P2252, P2A00: Air fuel ratio (A/F) sensor (Sensor 1)
P0134, P0135: Air fuel ratio (A/F) sensor (Sensor 1) heater
P0137, P0138, P0139, P2270, P2271: Secondary HO2S (Sensor 2)
P0141: Secondary HO2S (Sensor 2) heater
P0401, P0404, P0406, P2413: Exhaust gas recirculation (EGR) system
P0443, P0496: EVAP canister purge valve
P1024, P1286, P1287, P1288, P1289, P128A, P128B, P2279: Intake air leakage
P2647, P2648, P2649, P2651, P2652, P2653, P2654, P3400: Valve pause system

1. Check the fuel pressure; '06 model (see page 11-350), '07-08 models (see page 11-350).

   Is the fuel pressure OK?

   YES△Go to step 2.

   NO△
   - If the pressure is too high, replace the fuel pressure regulator (see page 11-363), then go to step 3.
   - If the pressure is too low, check the fuel pump, the fuel feed pipe and the fuel filter. If they are OK, replace the fuel pressure regulator (see page 11-363), then go to step 3.

2. Check for vacuum leaks at these parts:

   - PCV valve
   - PCV hose
   - EVAP canister purge valve
   - Throttle body
   - Intake manifold
   - Intake air duct

   Are the parts OK?

   YES△Check the engine valve clearances and adjust if necessary (see page 6-10). If the valve clearances are OK, replace the injectors (see page 11-228), then go to step 3.

   NO△Repair or replace parts with leaks, then go to step 3.

3. Turn the ignition switch to ON (II).

4. Reset the PCM with the HDS.

5. Do the PCM idle learn procedure (see page 11-333).

6. Start the engine. Hold the engine speed at 3,000 rpm without load (in P or N) until the radiator fan comes on, then let it idle.

7. Test-drive under these conditions:

   - Engine coolant temperature (ECT SENSOR 1) above 176 °F (80 °C)
   - Transmission in P or N
   - All electrical loads off

   NOTE: DTC P0171 and/or P0172 may take up to 80 minutes of test-driving to set. Using the HDS, monitor the air fuel feed back average (AF FB AVE). If the AF FB AVE stays within 0.80—1.20, there is no problem at this time.

8. Check for Temporary DTCs or DTCs with the HDS.

   Is DTC P0171 or P0172 indicated?

   YES△Go to step 1.

   NO△Troubleshooting is complete. If any other Temporary DTCs or DTCs are indicated, go to the indicated DTC's troubleshooting. ■

DTC Troubleshooting (cont'd)

DTC P0300: Random Misfire and Any Combination of the Following:

DTC P0301: No. 1 Cylinder Misfire Detected

DTC P0302: No. 2 Cylinder Misfire Detected

DTC P0303: No. 3 Cylinder Misfire Detected

DTC P0304: No. 4 Cylinder Misfire Detected

NOTE:
- Before you troubleshoot, record all freeze data and any on-board snapshot, and review the general troubleshooting information (see page 11-3).
- If the misfire is frequent enough to trigger detection of increased emissions during two consecutive driving cycles, the MIL will come on, and DTC P0300 (and some of the combination of P0301 through P0304) will be stored.
- If the misfire is frequent enough to damage the catalyst, the MIL will flash whenever the misfire occurs, and DTC P0300 (and some of the combination of P0301 through P0304) will be stored. When the misfire stops, the MIL will remain on.
- If any of the DTCs listed below are indicated at the same time as the random misfire DTCs, troubleshoot those DTCs first, then recheck for random misfire DTCs:

  P0101, P0102, P0103: Mass air flow (MAF) sensor
  P0106, P0107, P0108: Manifold absolute pressure (MAP) sensor
  P0171, P0172: Fuel system
  P0335, P0339: Crankshaft position (CKP) sensor
  P0351, P0352: Ignition coil
  P0365, P0369: Camshaft position (CMP) sensor
  P0401, P0404, P0416, P2413: Exhaust gas recirculation (EGR) system
  P0506, P0507: Idle control system
  P1024, P1286, P1287, P1288, P1289, P128A, P128B, P2647, P2648, P2649, P2651, P2652, P2653, P2654, P3400: Valve pause system

1. Turn the ignition switch to ON (II).

2. Clear the DTC with the HDS.

3. Start the engine, and let it idle without load (in P or N).

4. Monitor the OBD STATUS for DTC P0301, P0302, P0303, or P0304 in the DTCs MENU with the HDS.

   Does the screen indicate FAILED?

   YES△Go to step 9.

   NO△If the screen indicates PASSED, go to step 5. If the screen indicates EXECUTING, keep driving until a result comes on. If the screen indicates OUT OF CONDITION, wait for several minutes, then recheck.

5. Check the CYL1 MISFIRE, CYL2 MISFIRE, CYL3 MISFIRE, and/or CYL4 MISFIRE in the DATA LIST for 10 minutes with the HDS.

   Does the CYL1 MISFIRE, CYL2 MISFIRE, CYL3 MISFIRE, and/or CYL4 MISFIRE show misfire counts?

   YES△Go to step 9.

   NO△Go to step 6.

6. Test-drive the vehicle for several minutes in the range of these recorded freeze data parameters:

   - ENGINE SPEED
   - VSS
   - REL TP SENSOR
   - CLV (calculated load value)
   - APP SENSOR
   - ECT SENSOR 1

7. Monitor the OBD STATUS for DTC P0301, P0302, P0303, or P0304 in the DTCs MENU with the HDS.

   Does the screen indicate FAILED?

   YES△Go to step 9.

   NO△If the screen indicates PASSED, go to step 8. If the screen indicates EXECUTING, keep driving until a result comes on. If the screen indicates OUT OF CONDITION, go to step 6 and recheck.

8. Check the CYL1 MISFIRE, CYL2 MISFIRE, CYL3 MISFIRE, and/or CYL4 MISFIRE in the DATA LIST for 10 minutes with the HDS.

   Does the CYL1 MISFIRE, CYL2 MISFIRE, CYL3 MISFIRE, and/or CYL4 MISFIRE show misfire counts?

   YES△Go to step 9.

   NO△Intermittent failure, the system is OK at this time.■

9. Turn the ignition switch to LOCK (0).

10. Check the fuel quality.

    Is the quality good?

    YES△Go to step 11.

    NO△Drain the tank and fill with a known-good fuel, then go to step 15.

11. Inspect the spark plugs (see page 4-20). If the spark plugs are fouled or worn, replace them.

12. Test-drive the vehicle for several minutes in the range of these recorded freeze data parameters:

    - ENGINE SPEED
    - VSS
    - REL TP SENSOR
    - CLV (calculated load value)
    - APP SENSOR
    - ECT SENSOR 1

13. Check the CYL1 MISFIRE, CYL2 MISFIRE, CYL3 MISFIRE, and/or CYL4 MISFIRE in the DATA LIST for 10 minutes with the HDS.

    Does the CYL1 MISFIRE, CYL2 MISFIRE, CYL3 MISFIRE, and/or CYL4 MISFIRE show misfire counts?

    YES△Go to step 14.

    NO△Go to step 15.

14. Check the fuel pressure (see page 11-350).

    Is the fuel pressure OK?

    YES△Check the fuel system lines and hoses, for damage, leaks, and deterioration. Replace any damaged parts, then go to step 15.

    NO△
    - If the fuel pressure is too high, replace the fuel pressure regulator (see page 11-363), then go to step 15.
    - If the fuel pressure is too low, check the fuel pump, the fuel feed pipe, and the fuel filter. If they are OK, replace the fuel pressure regulator (see page 11-363), then go to step 15.

15. Turn the ignition switch to ON (II).

16. Reset the PCM with the HDS.

17. Clear the CKP pattern with the HDS.

18. Do the PCM idle learn procedure (see page 11-333).

(cont'd)

DTC Troubleshooting (cont'd)

19. Do the CKP pattern learn procedure (see page 11-4).

20. Test-drive the vehicle for several minutes in the range of these recorded freeze data parameters:

    - ENGINE SPEED
    - VSS
    - REL TP SENSOR
    - CLV (calculated load value)
    - APP SENSOR
    - ECT SENSOR 1

21. Check for Temporary DTCs or DTCs with the HDS.

    Is DTC P0300, P0301, P0302, P0303, or P0304 indicated?

    YES△Check for a poor connection or loose terminals at the ignition coils, the injectors, and the PCM, then go to troubleshooting DTC P0301, P0302, P0303, or P0304 (see page 11-104).

    NO△Go to step 22.

22. Monitor the OBD STATUS for DTC P0301, P0302, P0303, or P0304 in the DTCs MENU with the HDS.

    Does the screen indicate PASSED?

    YES△Troubleshooting is complete. If any other Temporary DTCs or DTCs were indicated in step 21, go to the indicated DTC's troubleshooting.■

    NO△If the screen indicates FAILED, go to step 1 and recheck. If the screen indicates EXECUTING, keep driving until a result comes on. If the screen indicates OUT OF CONDITION, go to step 20.

DTC P0301: No. 1 Cylinder Misfire Detected

DTC P0302: No. 2 Cylinder Misfire Detected

DTC P0303: No. 3 Cylinder Misfire Detected

DTC P0304: No. 4 Cylinder Misfire Detected

NOTE: Before you troubleshoot, record all freeze data and any on-board snapshot, and review the general troubleshooting information (see page 11-3).

1. Turn the ignition switch to ON (II).

2. Clear the DTC with the HDS.

3. Start the engine , and let it idle without load (in P or N).

4. Monitor the OBD STATUS for DTC P0301, P0302, P0303, or P0304 in the DTCs MENU with the HDS.

   Does the screen indicate FAILED?

   YES△Go to step 9.

   NO△If the screen indicates PASSED, go to step 5. If the screen indicates EXECUTING, keep idling until a result comes on. If the screen indicates OUT OF CONDITION, wait for several minutes, and recheck.

5. Check the CYL1 MISFIRE, CYL2 MISFIRE, CYL3 MISFIRE, and/or CYL4 MISFIRE in the DATA LIST for 10 minutes with the HDS.

   Does the CYL1 MISFIRE, CYL2 MISFIRE, CYL3 MISFIRE, and/or CYL4 MISFIRE show misfire counts?

   YES△Go to step 9.

   NO△Go to step 6.

6. Test-drive the vehicle for several minutes in the range of these recorded freeze data parameters:

   - ENGINE SPEED
   - VSS
   - REL TP SENSOR
   - CLV (calculated load value)
   - APP SENSOR
   - ECT SENSOR 1

7. Monitor the OBD STATUS for DTC P0301, P0302, P0303, or P0304 in the DTCs MENU with the HDS.

   Does the screen indicate FAILED?

   YES△Go to step 9.

   NO△If the screen indicates PASSED, go to step 8. If the screen indicates EXECUTING, keep driving until a result comes on. If the screen indicates OUT OF CONDITION, go to step 6 and recheck.

8. Check the CYL1 MISFIRE, CYL2 MISFIRE, CYL3 MISFIRE, and/or CYL4 MISFIRE in the DATA LIST for 10 minutes with the HDS.

   Does the CYL1 MISFIRE, CYL2 MISFIRE, CYL3 MISFIRE, and/or CYL4 MISFIRE show misfire counts?

   YES△Go to step 9.

   NO△Intermittent failure, the system is OK at this time. Check the fuel system circuit connectors for loose wires or poor connections.■

9. Turn the ignition switch to LOCK (0).

10. Exchange the ignition coils from the problem cylinder with those from another cylinder.

11. Test-drive the vehicle for several minutes in the range of these recorded freeze data parameters:

    - ENGINE SPEED
    - VSS
    - REL TP SENSOR
    - CLV (calculated load value)
    - APP SENSOR
    - ECT SENSOR 1

12. Check the CYL1 MISFIRE, CYL2 MISFIRE, CYL3 MISFIRE, and/or CYL4 MISFIRE in the DATA LIST for 10 minutes with the HDS.

    Does the CYL1 MISFIRE, CYL2 MISFIRE, CYL3 MISFIRE, and/or CYL4 MISFIRE show misfire counts?

    YES△Go to step 13.

    NO△Intermittent misfire due to poor contact at the ignition coil connector (no misfire at this time). Make sure the coil connections are secure.■

13. Determine which cylinder had the misfire.

    Does the misfire occur in the cylinder where the ignition coils were exchanged?

    YES△Replace the faulty ignition coil (see page 4-20), then go to step 49.

    NO△Go to step 14.

14. Turn the ignition switch to LOCK (0).

15. Exchange the spark plugs from the problem cylinder with those from another cylinder.

16. Test-drive the vehicle for several minutes in the range of these recorded freeze data parameters:

    - ENGINE SPEED
    - VSS
    - REL TP SENSOR
    - CLV (calculated load value)
    - APP SENSOR
    - ECT SENSOR 1

(cont'd)

DTC Troubleshooting (cont'd)

17. Check the CYL1 MISFIRE, CYL2 MISFIRE, CYL3 MISFIRE, and/or CYL4 MISFIRE in the DATA LIST for 10 minutes with the HDS.

    Does the CYL1 MISFIRE, CYL2 MISFIRE, CYL3 MISFIRE, and/or CYL4 MISFIRE show misfire counts?

    YES△Go to step 18.

    NO△Intermittent misfire due to spark plug fouling (no misfire at this time).■

18. Determine which cylinder had the misfire.

    Does the misfire occur in the cylinder where the spark plugs were exchanged?

    YES△Replace the faulty spark plug, then go to step 49.

    NO△Go to step 19.

19. Turn the ignition switch to LOCK (0).

20. Exchange the injector from the problem cylinder with one from the another cylinder.

21. Start the engine, and let it idle for 2 minutes.

22. Test-drive the vehicle for several minutes in the range of these recorded freeze data parameters:

    - ENGINE SPEED
    - VSS
    - REL TP SENSOR
    - CLV (calculated load value)
    - APP SENSOR
    - ECT SENSOR 1

23. Check the CYL1 MISFIRE, CYL2 MISFIRE, CYL3 MISFIRE, and/or CYL4 MISFIRE in the DATA LIST for 10 minutes with the HDS.

    Does the CYL1 MISFIRE, CYL2 MISFIRE, CYL3 MISFIRE, and/or CYL4 MISFIRE show misfire counts?

    YES△Go to step 24.

    NO△Intermittent misfire due to bad contact in the injector connector (no misfire at this time). Check for poor connections or loose terminals at the injector.■

24. Determine which cylinder had the misfire.

    Does the misfire occur in the cylinder where the injector was exchanged?

    YES△Replace the faulty injector (see page 11-228), then go to step 49.

    NO△Go to step 25.

25. Turn the ignition switch to LOCK (0).

26. Disconnect the ignition coil 3P connectors from the problem cylinder.

27. Turn the ignition switch to ON (II).

28. Measure the voltage between ignition coil 3P connector terminal No. 3 and body ground.

IGNITION COIL 3P CONNECTOR

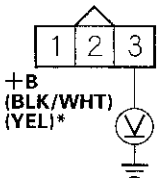

Wire side of female terminals

Is there battery voltage?

YES△Go to step 29.

NO△Repair open in the wire between the ignition coil and the No. 14 IGNITION COIL (IN) (15 A) fuse (or No. 13 IGNITION COIL (EX) (15 A) fuse)*, then go to step 47.

*: exhaust side

29. Turn the ignition switch to LOCK (0).

30. Check for continuity between ignition coil 3P connector terminal No. 2 and body ground.

IGNITION COIL 3P CONNECTOR

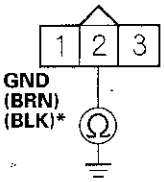

Wire side of female terminals

Is there continuity?

YES△Go to step 31.

NO△Repair open in the wire between the ignition coil and G102 (see page 22-16), then go to step 47.

*: exhaust side

31. Jump the SCS line with the HDS.

32. Disconnect PCM connector C (44P).

(cont'd)

DTC Troubleshooting (cont'd)

33. Check for continuity between body ground and the appropriate PCM connector terminal of the problem cylinder (see table).

FRONT (INTAKE) SIDE:

PROBLEM CYLINDER	DTC	PCM TERMINAL	WIRE COLOR
No. 1	P0301	C15	YEL/GRN
No. 2	P0302	C16	BLU/RED
No. 3	P0303	C17	BLK/RED
No. 4	P0304	C18	WHT/RED

REAR (EXHAUST) SIDE:

PROBLEM CYLINDER	DTC	PCM TERMINAL	WIRE COLOR
No. 1	P0301	C23	WHT
No. 2	P0302	C24	WHT/GRN
No. 3	P0303	C25	WHT/BLK
No. 4	P0304	C19	WHT/BLU

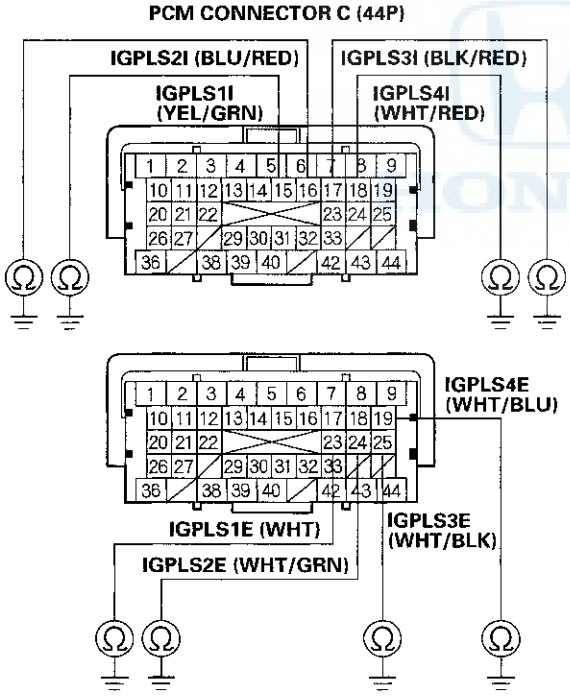

Is there continuity?

YES△Repair short in the wire between the PCM and the ignition coil, then go to step 47.

NO△Go to step 34.

34. Check for continuity between appropriate ignition coil 3P connector terminal No. 1 and the appropriate PCM connector terminal of the problem cylinder (see table).

FRONT (INTAKE) SIDE:

PROBLEM CYLINDER	DTC	PCM TERMINAL	WIRE COLOR
No. 1	P0301	C15	YEL/GRN
No. 2	P0302	C16	BLU/RED
No. 3	P0303	C17	BLK/RED
No. 4	P0304	C18	WHT/RED

REAR (EXHAUST) SIDE:

PROBLEM CYLINDER	DTC	PCM TERMINAL	WIRE COLOR
No. 1	P0301	C23	WHT
No. 2	P0302	C24	WHT/GRN
No. 3	P0303	C25	WHT/BLK
No. 4	P0304	C19	WHT/BLU

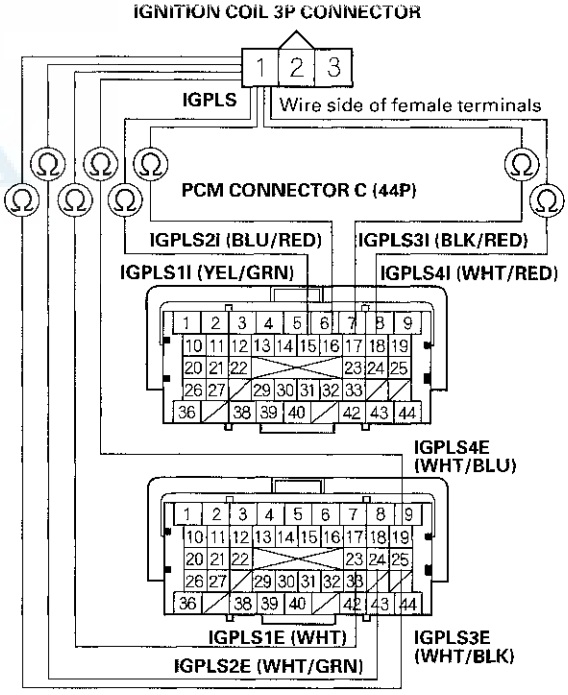

Is there continuity?

YES△Go to step 35.

NO△Repair open in the wire between the PCM and the ignition coil, then go to step 47.

35. Do an engine compression and a cylinder leakdown test (see page 6-6).

Did the engine pass both tests?

YES△Go to step 36.

NO△Repair the engine, then go to step 47.

36. Do the VTEC rocker arm test (see page 6-7).

Did the engine pass the test?

YES△Go to step 37.

NO△Repair the VTEC rocker arm (see page 6-33), then go to step 47.

37. Turn the ignition switch to ON (II).

38. Measure the voltage between body ground and the appropriate PCM connector terminal of the problem cylinder (see table).

PROBLEM CYLINDER	DTC	PCM TERMINAL	WIRE COLOR
No. 1	P0301	C5	BRN
No. 2	P0302	C6	RED
No. 3	P0303	C7	BLU
No. 4	P0304	C8	YEL

PCM CONNECTOR C (44P)

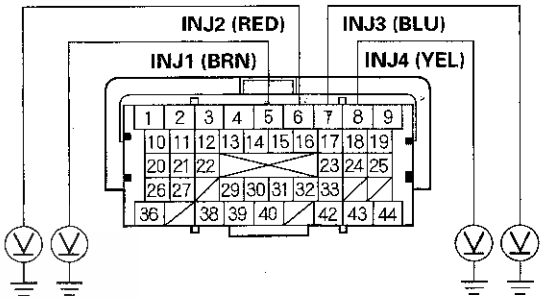

Terminal side of female terminals

Is there battery voltage?

YES△Go to step 46.

NO△Go to step 39.

(cont'd)

DTC Troubleshooting (cont'd)

39. Turn the ignition switch to LOCK (0).

40. Disconnect the injector 2P connector from the problem cylinder.

41. Turn the ignition switch to ON (II).

42. Measure the voltage between injector 2P connector terminal No. 1 and body ground.

INJECTOR 2P CONNECTOR

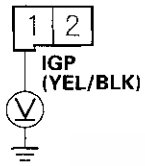

Wire side of female terminals

Is there battery voltage?

YES△Go to step 43.

NO△Repair open in the wire between the injector and PGM-FI main relay 1, then go to step 47.

43. Turn the ignition switch to LOCK (0).

44. Check for continuity between body ground and the appropriate PCM connector terminal of the problem cylinder (see table).

PROBLEM CYLINDER	DTC	PCM TERMINAL	WIRE COLOR
No. 1	P0301	C5	BRN
No. 2	P0302	C6	RED
No. 3	P0303	C7	BLU
No. 4	P0304	C8	YEL

PCM CONNECTOR C (44P)

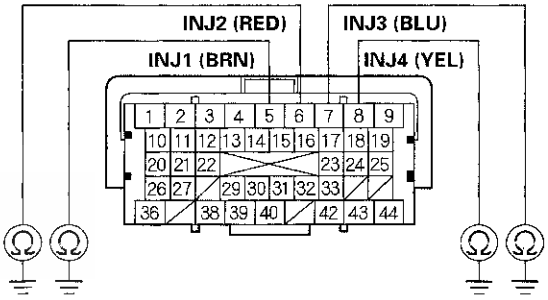

Terminal side of female terminals

Is there continuity?

YES△Repair short in the wire between the PCM and the injector, then go to step 47.

NO△Go to step 45.

45. Check for continuity between appropriate injector 2P connector terminal No. 2 and the appropriate PCM connector terminal of the problem cylinder (see table).

PROBLEM CYLINDER	DTC	PCM TERMINAL	WIRE COLOR
No. 1	P0301	C5	BRN
No. 2	P0302	C6	RED
No. 3	P0303	C7	BLU
No. 4	P0304	C8	YEL

INJECTOR 2P CONNECTOR

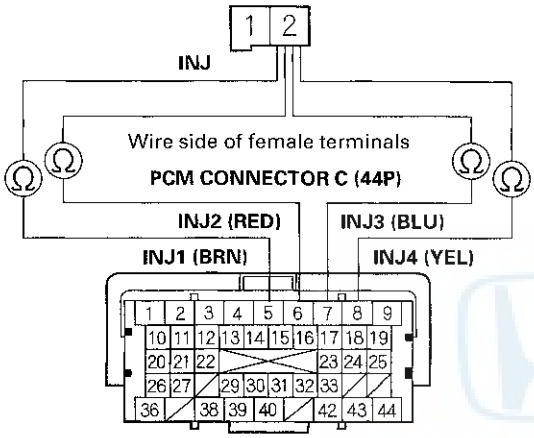

Terminal side of female terminals

Is there continuity?

YES△Go to step 46.

NO△Repair open in the wire between the PCM and the injector, then go to step 47.

46. At the injector side, measure the resistance between injector 2P connector terminals No. 1 and No. 2.

INJECTOR 2P CONNECTOR

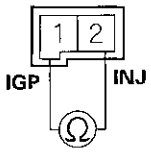

Terminal side of male terminals

Is there 10– 13 Ω ?

YES△Go to step 57.

NO△Replace the injector (see page 11-228), then go to step 47.

47. Turn the ignition switch to LOCK (0).

48. Reconnect all connectors.

49. Turn the ignition switch to ON (II).

50. Reset the PCM with the HDS.

(cont'd)

DTC Troubleshooting (cont'd)

51. Clear the CKP pattern with the HDS.

52. Do the PCM idle learn procedure (see page 11-333).

53. Do the CKP pattern learn procedure (see page 11-4).

54. Test-drive the vehicle for several minutes in the range of these recorded freeze data parameters:

    - ENGINE SPEED
    - VSS
    - REL TP SENSOR
    - CLV (calculated load value)
    - APP SENSOR
    - ECT SENSOR 1

55. Check for Temporary DTCs or DTCs with the HDS.

    Is DTC P0301, P0302, P0303, or P0304 indicated?

    YES△Check for poor connections or loose terminals at the ignition coil, the injector, and the PCM, then go to troubleshooting DTC P0300, P0301, P0302, P0303, or P0304 (see page 11-102).

    NO△Go to step 56.

56. Monitor the OBD STATUS for DTC P0301, P0302, P0303, or P0304 in the DTCs MENU with the HDS.

    Does the screen indicate PASSED?

    YES△Troubleshooting is complete. If any other Temporary DTCs or DTCs were indicated in step 55, go to the indicated DTC's troubleshooting.■

    NO△If the screen indicates FAILED, check for poor connections or loose terminals at the ignition coil, the injector, and the PCM, then go to step 1. If the screen indicates EXECUTING, keep driving until a result comes on. If the screen indicates OUT OF CONDITION, go to step 54.

57. Reconnect all connectors.

58. Update the PCM if it does not have the latest software (see page 11-236), or substitute a known-good PCM (see page 11-7).

59. Test-drive the vehicle for several minutes in the range of these recorded freeze data parameters:

    - ENGINE SPEED
    - VSS
    - REL TP SENSOR
    - CLV (calculated load value)
    - APP SENSOR
    - ECT SENSOR 1

60. Check for Temporary DTCs or DTCs with the HDS.

    Is DTC P0301, P0302, P0303, or P0304 indicated?

    YES△Check for poor connections or loose terminals at the ignition coil, the injector, and the PCM. If the PCM was updated, substitute a known-good PCM (see page 11-7), then go to step 59. If the PCM was substituted, go to step 1.

    NO△Go to step 61.

61. Monitor the OBD STATUS for DTC P0301, P0302, P0303, or P0304 in the DTCs MENU with the HDS.

Does the screen indicate PASSED?

YES△If the PCM was updated, troubleshooting is complete. If the PCM was substituted, replace the original PCM (see page 11-238). If any other Temporary DTCs or DTCs were indicated in step 60, go to the indicated DTC's troubleshooting.■

NO△If the screen indicates FAILED, check for poor connections or loose terminals at the ignition coil, the injector, and the PCM. If the PCM was updated, substitute a known-good PCM (see page 11-7), then go to step 59. If the PCM was substituted, go to step 1. If the screen indicates EXECUTING, keep driving until a result comes on. If the screen indicates OUT OF CONDITION, go to step 59.

DTC P0325: Knock Sensor Circuit Malfunction

NOTE: Before you troubleshoot, record all freeze data and any on-board snapshot, and review the general troubleshooting information (see page 11-3).

1. Turn the ignition switch to ON (II).
2. Clear the DTC with the HDS.
3. Start the engine. Hold the engine speed at 3,000 rpm without load (in P or N) until the radiator fan comes on, then let it idle.
4. Hold the engine speed between 3,000—4,000 rpm for at least 10 seconds.
5. Check for Temporary DTCs or DTCs with the HDS.

   Is DTC P0325 indicated?

   YES△Go to step 6.

   NO△Intermittent failure, the system is OK at this time. Check for poor connections or loose terminals at the knock sensor and the PCM.■

6. Turn the ignition switch to LOCK (0).
7. Jump the SCS line with the HDS.
8. Disconnect the knock sensor 1P connector (see page 11-234).
9. Disconnect PCM connector C (44P).

(cont'd)

DTC Troubleshooting (cont'd)

10. Check for continuity between PCM connector terminal C42 and body ground.

PCM CONNECTOR C (44P)

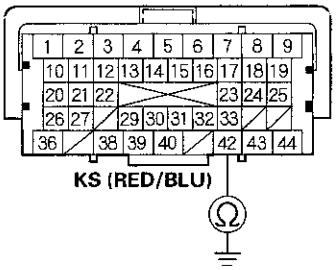

Terminal side of female terminals

Is there continuity?

YES△Repair short in the wire between the PCM (C42) and the knock sensor, then go to step 14.

NO△Go to step 11.

11. Connect the knock sensor 1P connector terminal to body ground with a jumper wire.

KNOCK SENSOR 1P CONNECTOR

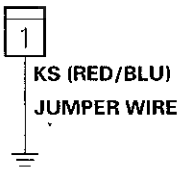

Wire side of female terminals

12. Check for continuity between PCM connector terminal C42 and body ground.

PCM CONNECTOR C (44P)

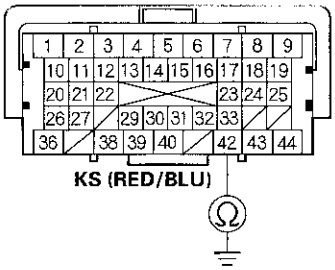

Terminal side of female terminals

Is there continuity?

YES△Go to step 13.

NO△Repair open in the wire between the PCM (C42) and the knock sensor, then go to step 14.

13. Replace the knock sensor (see page 11-234).

14. Reconnect all connectors.

15. Turn the ignition switch to ON (II).

16. Reset the PCM with the HDS.

17. Do the PCM idle learn procedure (see page 11-333).

18. Hold the engine speed between 3,000—4,000 rpm for at least 10 seconds.

19. Check for Temporary DTCs or DTCs with the HDS.

Is DTC P0325 indicated?

YES△Go to step 21.

NO△Go to step 20.

20. Monitor the OBD STATUS for DTC P0325 in the DTCs MENU with the HDS.

    Does the screen indicate PASSED?

    YES△Troubleshooting is complete. If any other Temporary DTCs or DTCs were indicated in step 19, go to the indicated DTC's troubleshooting.■

    NO△If the screen indicates FAILED, check for poor connections or loose terminals at the knock sensor and the PCM, then go to step 1. If the screen indicates NOT COMPLETED, go to step 17.

21. Update the PCM if it does not have the latest software (see page 11-236), or substitute a known-good PCM (see page 11-7).

22. Hold the engine speed between 3,000—4,000 rpm for at least 10 seconds.

23. Check for Temporary DTCs or DTCs with the HDS.

    Is DTC P0325 indicated?

    YES△Check for poor connections or loose terminals at the knock sensor and the PCM. If the PCM was updated, substitute a known-good PCM (see page 11-7), then go to step 22. If the PCM was substituted, go to step 1.

    NO△Go to step 24.

24. Monitor the OBD STATUS for DTC P0325 in the DTCs MENU with the HDS.

    Does the screen indicate PASSED?

    YES△If the PCM was updated, troubleshooting is complete. If the PCM was substituted, replace the original PCM (see page 11-238). If any other Temporary DTCs or DTCs were indicated in step 23, go to the indicated DTC's troubleshooting.■

    NO△If the screen indicates FAILED, check for poor connections or loose terminals at the knock sensor and the PCM. If the PCM was updated, substitute a known-good PCM (see page 11-7), then go to step 22. If the PCM was substituted, go to step 1. If the screen indicates NOT COMPLETED, go to step 22.

DTC P0335: CKP Sensor No Signal

NOTE: Before you troubleshoot, record all freeze data and any on-board snapshot, and review the general troubleshooting information (see page 11-3).

1. Turn the ignition switch to ON (II).

2. Clear the DTC with the HDS.

3. Start the engine.

4. Check for Temporary DTCs or DTCs with the HDS.

   Is DTC P0335 indicated?

   YES△Go to step 5.

   NO△Intermittent failure, the system is OK at this time. Check for poor connections or loose terminals at the CKP sensor and the PCM.■

5. Turn the ignition switch to LOCK (0).

6. Disconnect the CKP sensor 3P connector.

7. Turn the ignition switch to ON (II).

8. Measure the voltage between CKP sensor 3P connector terminal No. 3 and body ground.

CKP SENSOR 3P CONNECTOR

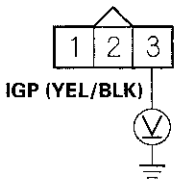

Wire side of female terminals

Is there battery voltage?

YES△Go to step 9.

NO△Repair open in the wire between the CKP sensor and PGM-FI main relay 1, then go to step 19.

(cont'd)

DTC Troubleshooting (cont'd)

9. Measure the voltage between CKP sensor 3P connector terminal No. 1 and body ground.

CKP SENSOR 3P CONNECTOR

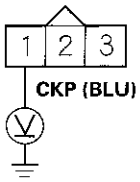

Wire side of female terminals

Is there about 5 V?

YES△Go to step 10.

NO△Go to step 11.

10. Measure the voltage between CKP sensor 3P connector terminals No. 2 and No. 3.

CKP SENSOR 3P CONNECTOR

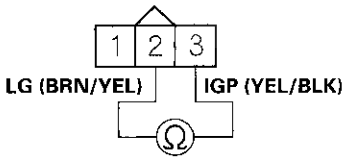

Wire side of female terminals

Is there battery voltage?

YES△Go to step 17.

NO△Repair open in the wire between the CKP sensor and G102 (see page 22-16), then go to step 19.

11. Turn the ignition switch to LOCK (0).

12. Jump the SCS line with the HDS.

13. Disconnect PCM connector C (44P).

14. Check for continuity between PCM connector terminal C32 and body ground.

PCM CONNECTOR C (44P)

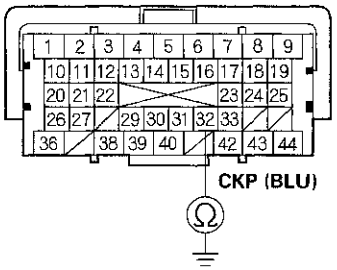

Terminal side of female terminals

Is there continuity?

YES△Repair short in the wire between the PCM (C32) and the CKP sensor, then go to step 19.

NO△Go to step 15.

15. Connect CKP sensor 3P connector terminal No. 1 to body ground with a jumper wire.

CKP SENSOR 3P CONNECTOR

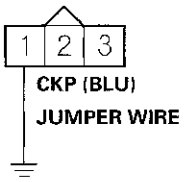

Wire side of female terminals

16. Check for continuity between PCM connector terminal C32 and body ground.

PCM CONNECTOR C (44P)

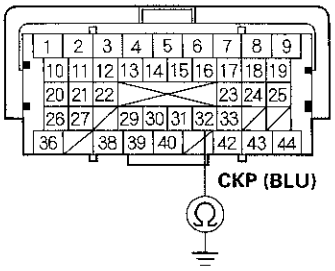

Terminal side of female terminals

Is there continuity?

YES△Go to step 26.

NO△Repair open in the wire between the PCM (C32) and the CKP sensor, then go to step 19.

17. Turn the ignition switch to LOCK (0).

18. Replace the CKP sensor (see page 11-231).

19. Reconnect all connectors.

20. Turn the ignition switch to ON (II).

21. Reset the PCM with the HDS.

22. Clear the CKP pattern with the HDS.

23. Do the PCM idle learn procedure (see page 11-333).

24. Do the CKP pattern learn procedure (see page 11-4).

25. Check for Temporary DTCs or DTCs with the HDS.

Is DTC P0335 indicated?

YES△Check for poor connections or loose terminals at the CKP sensor and the PCM, then go to step 1.

NO△Troubleshooting is complete. If any other Temporary DTCs or DTCs are indicated, go to the indicated DTC's troubleshooting.■

26. Reconnect all connectors.

27. Update the PCM if it does not have the latest software (see page 11-236), or substitute a known-good PCM (see page 11-7).

28. Check for Temporary DTCs or DTCs with the HDS.

Is DTC P0335 indicated?

YES△Check for poor connections or loose terminals at the CKP sensor and the PCM. If the PCM was updated, substitute a known-good PCM (see page 11-7), then recheck. If the PCM was substituted, go to step 1.

NO△If the PCM was updated, troubleshooting is complete. If the PCM was substituted, replace the original PCM (see page 11-238). If any other Temporary DTCs or DTCs are indicated, go to the indicated DTC's troubleshooting.■

DTC Troubleshooting (cont'd)

DTC P0339: CKP Sensor Intermittent Interruption

NOTE: Before you troubleshoot, record all freeze data and any on-board snapshot, and review the general troubleshooting information (see page 11-3).

1. Turn the ignition switch to ON (II).
2. Clear the DTC with the HDS.
3. Start the engine, and let it idle for 10 seconds.
4. Check the CKP NOISE in the DATA LIST with the HDS.

   Are 0 counts indicated?

   YES△Go to step 7.

   NO△Go to step 5.
5. Test-drive the vehicle for several minutes in the range of these recorded freeze data parameters:

   • ENGINE SPEED
   • VSS
6. Check the CKP NOISE in the DATA LIST with the HDS.

   Are 0 counts indicated?

   YES△Go to step 7.

   NO△Intermittent failure, the system is OK at this time. Check for poor connections or loose terminals at the CKP sensor and the PCM.■
7. Check for poor or loose connections and terminals at these locations:

   • CKP sensor
   • PCM
   • Engine ground
   • Body ground

   Are the connections and terminals OK?

   YES△Go to step 8.

   NO△Repair the connectors or terminals, then go to step 11.
8. Remove the cam chain case (see page 6-14), and check for damage to the CKP sensor pulser plate.

   Is the pulser plate damaged?

   YES△Replace the CKP sensor pulser plate (see page 11-231), then go to step 11.

   NO△Go to step 9.
9. Turn the ignition switch to LOCK (0).
10. Replace the CKP sensor (see page 11-231).
11. Turn the ignition switch to ON (II).
12. Reset the PCM with the HDS.
13. Clear the CKP pattern with the HDS.
14. Do the PCM idle learn procedure (see page 11-333).
15. Do the CKP pattern learn procedure (see page 11-4).
16. Start the engine, and let it idle for 10 seconds.
17. Check for Temporary DTCs or DTCs with the HDS.

    Is DTC P0339 indicated?

    YES△Check for poor connections or loose terminals at the CKP sensor and the PCM, then go to step 1.

    NO△Troubleshooting is complete. If any other Temporary DTCs or DTCs are indicated, go to the indicated DTC's troubleshooting.■

DTC P0351: Intake Side Ignition Coil Power Circuit Malfunction

NOTE: Before you troubleshoot, record all freeze data and any on-board snapshot, and review the general troubleshooting information (see page 11-3).

1. Turn the ignition switch to ON (II).

2. Clear the DTC with the HDS.

3. Check for Temporary DTCs or DTCs with the HDS.

   Is DTC P0351 indicated?

   YES△Go to step 4.

   NO△Intermittent failure, the system is OK at this time. Check for poor connections or loose terminals at the No. 14 IGNITION COIL (IN) (15 A) fuse, the intake side ignition coil, and the PCM.■

4. Turn the ignition switch to LOCK (0).

5. Check the No. 14 IGNITION COIL (IN) (15 A) fuse in the under-hood fuse/relay box.

   Is the fuse OK?

   YES△Go to step 11.

   NO△Go to step 6.

6. Jump the SCS line with the HDS.

7. Disconnect PCM connector C (44P).

8. Remove the No. 14 IGNITION COIL (IN) (15 A) fuse from the under-hood fuse/relay box.

9. Check for continuity between PCM connector terminal C26 and body ground.

PCM CONNECTOR C (44P)

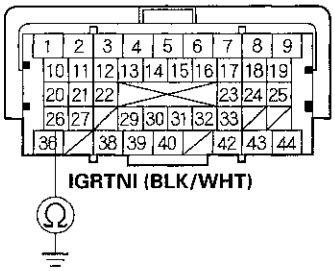

Terminal side of female terminals

   Is there continuity?

   YES△Go to step 10.

   NO△Go to step 23.

10. Continue to check for continuity between PCM connector terminal C26 and body ground while disconnecting the 3P connector from each intake side ignition coil, one at time.

    Did any ignition coil cause an open when it was disconnected?

    YES△Replace the ignition coil that caused an open when it was disconnected, then go to step 16.

    NO△Repair short in the wire between the No. 14 IGNITION COIL (IN) (15 A) fuse, the intake side ignition coil and the PCM (C26), then go to step 16.

11. Jump the SCS line with the HDS.

12. Disconnect PCM connector C (44P).

13. Turn the ignition switch to ON (II).

(cont'd)

DTC Troubleshooting (cont'd)

14. Measure the voltage between PCM connector terminal C26 and body ground.

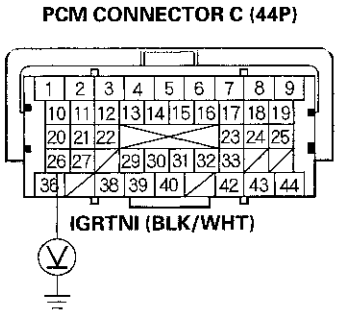

Terminal side of female terminals

Is there battery voltage?

YES△Go to step 22.

NO△Go to step 15.

15. Test the ignition coil relay (B) in the under-hood fuse/relay box (see page 22-64).

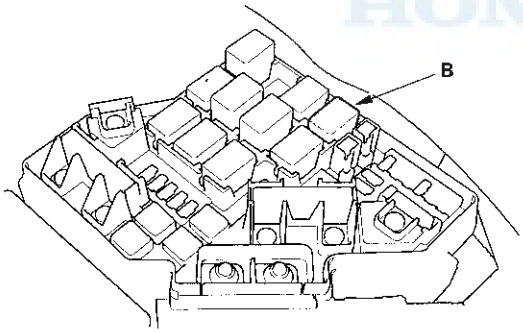

Is the ignition coil relay OK?

YES△Repair open in the wire between the No. 14 IGNITION COIL (IN) (15 A) fuse and the PCM (C26). If the wire is OK, replace the under-hood fuse/relay box (see page 22-59), then go to step 16.

NO△Replace the ignition coil relay, then go to step 16.

16. Turn the ignition switch to LOCK (0).

17. Reconnect all connectors.

18. Turn the ignition switch to ON (II).

19. Reset the PCM with the HDS.

20. Do the PCM idle learn procedure (see page 11-333).

21. Check for Temporary DTCs or DTCs with the HDS.

Is DTC P0351 indicated?

YES△Check for poor connections or loose terminals at the No. 14 IGNITION COIL (IN) (15 A) fuse, the intake side ignition coil, and the PCM, then go to step 1.

NO△Troubleshooting is complete. If any other Temporary DTCs or DTCs are indicated, go to the indicated DTC's troubleshooting.■

22. Turn the ignition switch to LOCK (0).

23. Reconnect all connectors.

24. Update the PCM if it does not have the latest software (see page 11-236), or substitute a known-good PCM (see page 11-7).

25. Check for Temporary DTCs or DTCs with the HDS.

Is DTC P0351 indicated?

YES△Check for poor connections or loose terminals at the No. 14 IGNITION COIL (IN) (15 A) fuse, the intake side ignition coil, and the PCM. If the PCM was updated, substitute a known-good PCM (see page 11-7), then recheck. If the PCM was substituted, go to step 1.

NO△If the PCM was updated, troubleshooting is complete. If the PCM was substituted, replace the original PCM (see page 11-238). If any other Temporary DTCs or DTCs are indicated, go to the indicated DTC's troubleshooting.■

DTC P0352: Exhaust Side Ignition Coil Power Circuit Malfunction

NOTE: Before you troubleshoot, record all freeze data and any on-board snapshot, and review the general troubleshooting information (see page 11-3).

1. Turn the ignition switch to ON (II).

2. Clear the DTC with the HDS.

3. Check for Temporary DTCs or DTCs with the HDS.

   Is DTC P0352 indicated?

   YES△Go to step 4.

   NO△Intermittent failure, the system is OK at this time. Check for poor connections or loose terminals at the No. 13 IGNITION COIL (EX) (15 A) fuse, the exhaust side ignition coil, and the PCM. ■

4. Turn the ignition switch to LOCK (0).

5. Check the No. 13 IGNITION COIL (EX) (15 A) fuse in the under-hood fuse/relay box.

   Is the fuse OK?

   YES△Go to step 11.

   NO△Go to step 6.

6. Jump the SCS line with the HDS.

7. Disconnect PCM connector C (44P).

8. Remove the No. 13 IGNITION COIL (EX) (15 A) fuse from the under-hood fuse/relay box.

9. Check for continuity between PCM connector terminal C38 and body ground.

PCM CONNECTOR C (44P)

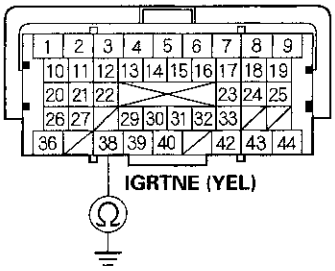

Terminal side of female terminals

   Is there continuity?

   YES△Go to step 10.

   NO△Go to step 23.

10. Continue to check for continuity between PCM connector terminal C38 and body ground while disconnecting the 3P connector from the each exhaust side ignition coil, one at time.

    Did any ignition coil cause an open when it was disconnected?

    YES△Replace the ignition coil that caused an open when it was disconnected, then go to step 16.

    NO△Repair short in the wire between the No. 13 IGNITION COIL (EX) (15 A) fuse, the exhaust side ignition coil and the PCM (C38), then go to step 16.

11. Jump the SCS line with the HDS.

12. Disconnect PCM connector C (44P).

13. Turn the ignition switch to ON (II).

(cont'd)

DTC Troubleshooting (cont'd)

14. Measure the voltage between PCM connector terminal C38 and body ground.

PCM CONNECTOR C (44P)

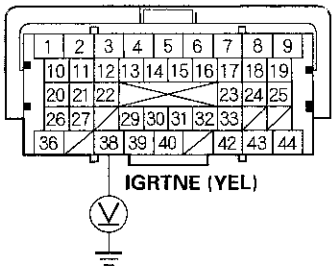

Terminal side of female terminals

Is there battery voltage?

YES△Go to step 22.

NO△Go to step 15.

15. Test the ignition coil relay (B) in the under-hood fuse/relay box (see page 22-64).

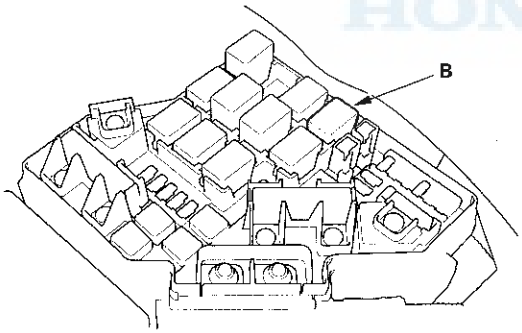

Is the ignition coil relay OK?

YES△Repair open in the wire between the No. 13 IGNITION COIL (EX) (15 A) fuse and the PCM (C38). If the wire is OK, replace the under-hood fuse/relay box (see page 22-59), then go to step 16.

NO△Replace the ignition coil relay, then go to step 16.

16. Turn the ignition switch to LOCK (0).

17. Reconnect all connectors.

18. Turn the ignition switch to ON (II).

19. Reset the PCM with the HDS.

20. Do the PCM idle learn procedure (see page 11-333).

21. Check for Temporary DTCs or DTCs with the HDS.

Is DTC P0352 indicated?

YES△Check for poor connections or loose terminals at the No. 13 IGNITION COIL (EX) (15 A) fuse, the exhaust side ignition coil, and the PCM, then go to step 1.

NO△Troubleshooting is complete. If any other Temporary DTCs or DTCs are indicated, go to the indicated DTC's troubleshooting.■

22. Turn the ignition switch to LOCK (0).

23. Reconnect all connectors.

24. Update the PCM if it does not have the latest software (see page 11-236), or substitute a known-good PCM (see page 11-7).

25. Check for Temporary DTCs or DTCs with the HDS.

Is DTC P0352 indicated?

YES△Check for poor connections or loose terminals at the No. 13 IGNITION COIL (EX) (15 A) fuse, the exhaust side ignition coil, and the PCM. If the PCM was updated, substitute a known-good PCM (see page 11-7), then recheck. If the PCM was substituted, go to step 1.

NO△If the PCM was updated, troubleshooting is complete. If the PCM was substituted, replace the original PCM (see page 11-238). If any other Temporary DTCs or DTCs are indicated, go to the indicated DTC's troubleshooting.■

DTC P0365: CMP Sensor No Signal

NOTE: Before you troubleshoot, record all freeze data and any on-board snapshot, and review the general troubleshooting information (see page 11-3).

1. Turn the ignition switch to ON (II).
2. Clear the DTC with the HDS.
3. Start the engine.
4. Check for Temporary DTCs or DTCs with the HDS.

   Is DTC P0365 indicated?

   YES△Go to step 5.

   NO△Intermittent failure, the system is OK at this time. Check for poor connections or loose terminals at the CMP sensor and the PCM. ■

5. Turn the ignition switch to LOCK (0).
6. Disconnect the CMP sensor 3P connector.
7. Turn the ignition switch to ON (II).
8. Measure the voltage between CMP sensor 3P connector terminal No. 3 and body ground.

CMP SENSOR 3P CONNECTOR

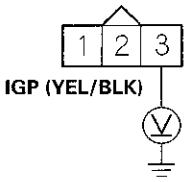

Wire side of female terminals

Is there battery voltage?

YES△Go to step 9.

NO△Repair open in the wire between the CMP sensor and PGM-FI main relay 1, then go to step 18.

9. Measure the voltage between CMP sensor 3P connector terminal No. 1 and body ground.

CMP SENSOR 3P CONNECTOR

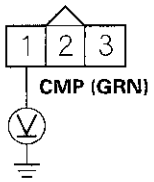

Wire side of female terminals

Is there about 5 V?

YES△Go to step 10.

NO△Go to step 11.

(cont'd)

DTC Troubleshooting (cont'd)

10. Measure the voltage between CMP sensor 3P connector terminals No. 2 and No. 3.

CMP SENSOR 3P CONNECTOR

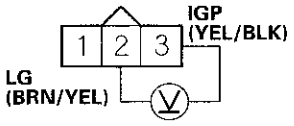

Wire side of female terminals

Is there battery voltage?

YES△Go to step 16.

NO△Repair open in the wire between the CMP sensor and G102 (see page 22-16), then go to step 18.

11. Turn the ignition switch to LOCK (0).

12. Jump the SCS line with the HDS.

13. Disconnect PCM connector C (44P).

14. Check for continuity between PCM connector terminal C31 and body ground.

PCM CONNECTOR C (44P)

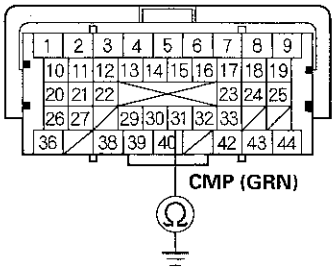

Terminal side of female terminals

Is there continuity?

YES△Repair short in the wire between the PCM (C31) and the CMP sensor, then go to step 18.

NO△Go to step 15.

15. Check for continuity between CMP sensor 3P connector terminal No. 1 and PCM connector terminal C31.

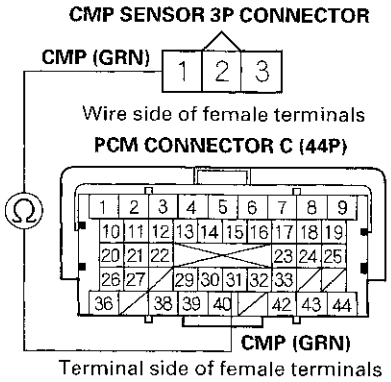

Is there continuity?

YES△Go to step 23.

NO△Repair open in the wire between the PCM (C31) and the CMP sensor, then go to step 18.

16. Turn the ignition switch to LOCK (0).

17. Replace the CMP sensor (see page 11-231).

18. Reconnect all connectors.

19. Turn the ignition switch to ON (II).

20. Reset the PCM with the HDS.

21. Do the PCM idle learn procedure (see page 11-333).

22. Check for Temporary DTCs or DTCs with the HDS.

    Is DTC P0365 indicated?

    YES△Check for poor connections or loose terminals at the CMP sensor and the PCM, then go to step 1.

    NO△Troubleshooting is complete. If any other Temporary DTCs or DTCs are indicated, go to the indicated DTC's troubleshooting.■

23. Reconnect all connectors.

24. Update the PCM if it does not have the latest software (see page 11-236), or substitute a known-good PCM (see page 11-7).

25. Check for Temporary DTCs or DTCs with the HDS.

    Is DTC P0365 indicated?

    YES△Check for poor connections or loose terminals at the CMP sensor and the PCM. If the PCM was updated, substitute a known-good PCM (see page 11-7), then recheck. If the PCM was substituted, go to step 1.

    NO△If the PCM was updated, troubleshooting is complete. If the PCM was substituted, replace the original PCM (see page 11-238). If any other Temporary DTCs or DTCs are indicated, go to the indicated DTC's troubleshooting.■

DTC Troubleshooting (cont'd)

DTC P0369: CMP Sensor Circuit Intermittent Interruption

NOTE: Before you troubleshoot, record all freeze data and any on-board snapshot, and review the general troubleshooting information (see page 11-3).

1. Turn the ignition switch to ON (II).
2. Clear the DTC with the HDS.
3. Start the engine, and let it idle for 10 seconds.
4. Check the CMP NOISE in the DATA LIST with the HDS.

   Are 0 counts indicated?

   YES△Go to step 7.

   NO△Go to step 5.
5. Test-drive the vehicle for several minutes in the range of these recorded freeze data parameters:

   • ENGINE SPEED
   • VSS
6. Check the CMP NOISE in the DATA LIST with the HDS.

   Are 0 counts indicated?

   YES△Go to step 7.

   NO△Intermittent failure, the system is OK at this time. Check for poor connections or loose terminals at the CMP sensor and the PCM. ■
7. Check for poor or loose connections and terminals at these locations:

   • CMP sensor
   • PCM
   • Engine ground
   • Body ground

   Are the connections and terminals OK?

   YES△Go to step 8.

   NO△Repair the connectors or terminals, then go to step 11.
8. Check for damage to the CMP sensor pulser plate (see page 6-30).

   Is the pulser plate damaged?

   YES△Replace the CMP sensor pulser plate (see page 6-30), then go to step 11.

   NO△Go to step 9.
9. Turn the ignition switch to LOCK (0).
10. Replace the CMP sensor (see page 11-231).
11. Turn the ignition switch to ON (II).
12. Reset the PCM with the HDS.
13. Do the PCM idle learn procedure (see page 11-333).
14. Start the engine, and let it idle for 10 seconds.
15. Check for Temporary DTCs or DTCs with the HDS.

    Is DTC P0369 indicated?

    YES△Check for poor connections or loose terminals at the CMP sensor and the PCM, then go to step 1.

    NO△Troubleshooting is complete. If any other Temporary DTCs or DTCs are indicated, go to the indicated DTC's troubleshooting. ■

DTC P050A: Cold Start Idle Air Control System Performance Problem

NOTE: Before you troubleshoot, record all freeze data and any on-board snapshot, and review the general troubleshooting information (see page 11-3).

1. Turn the ignition switch to ON (II).

2. Check for Temporary DTCs or DTCs with the HDS.

   Are any Temporary DTCs or DTCs other than P050A indicated?

   YES△Go to the indicated DTC's troubleshooting. ■

   NO△Go to step 3.

3. Check for poor connection or blockage at the intake air duct.

   Is it OK?

   YES△Go to step 4.

   NO△Reconnect or repair the intake air duct, then go to step 20.

4. Check for damage at the air cleaner housing.

   Is it OK?

   YES△Go to step 5.

   NO△Replace the air cleaner (see page 11-370), then go to step 20.

5. Check for dirt or debris on the air cleaner element.

   Is it dirty?

   YES△Replace the air cleaner element (see page 11-371), then go to step 20.

   NO△Go to step 6.

6. Let the engine cool until the value of ECT SENSOR 1 is 122 °F (50 °C) or less.

7. Clear the DTC with the HDS.

8. Start the engine, and let it idle for 10 seconds or more.

9. Monitor the OBD STATUS for DTC P050A in the DTCs MENU with the HDS.

   Does the screen indicate FAILED?

   YES△Go to step 10.

   NO△If the screen indicates PASSED, intermittent failure, the system is OK at this time. Check for poor connections or loose terminals at the throttle body, the MAF sensor/IAT sensor, and the PCM. If the screen indicates EXECUTING, keep idling until a result comes on. If the screen indicates OUT OF CONDITION, go to step 6 and recheck.

10. Do the ETCS TEST in the INSPECTION MENU with the HDS.

    Is the THROTTLE ACTUATOR CONTROL VALVE normal?

    YES△Go to step 11.

    NO△Replace the throttle body (see page 11-372), then go to step 20.

11. Start the engine. Hold the engine speed at 3,000 rpm without load (in P or N) until the radiator fan comes on, then let it idle.

(cont'd)

DTC Troubleshooting (cont'd)

12. Monitor the ENGINE SPEED in the DATA LIST with the HDS, and hold the engine speed at 2,500 rpm for at least 30 seconds.

13. While holding the engine speed at 2,500 rpm, check the MAF SENSOR in the DATA LIST with the HDS.

    Is there about 3.9–5.5 gm/s?

    YES△Go to step 14.

    NO△Replace the MAF sensor/IAT sensor (see page 11-232), then go to step 20.

14. Turn the ignition switch to LOCK (0).

15. Allow the engine to cool to ambient temperature.

16. Note the ambient temperature.

17. Turn the ignition switch to ON (II).

18. Note the value of IAT SENSOR quickly in the DATA LIST with the HDS.

19. Compare the value of the IAT SENSOR with the ambient temperature.

    Does the value of the IAT SENSOR differ 5.4 °F (3 °C) or more from the ambient temperature?

    YES△Replace the MAF sensor/IAT sensor (see page 11-232), then go to step 20.

    NO△Check for dirt, carbon, or damage in the throttle bore. If there is dirt or carbon, clean the throttle body (see page 11-370), then go to step 20. If there is damage in the throttle bore, replace the throttle body (see page 11-372), then go to step 20.

20. Turn the ignition switch to ON (II).

21. Reset the PCM with the HDS.

22. Do the PCM idle learn procedure (see page 11-333).

23. Let the engine cool until the value of ECT SENSOR 1 is 122 °F (50 °C) or less.

24. Start the engine, and let it idle for 10 seconds or more.

25. Check for Temporary DTCs or DTCs with the HDS.

    Is DTC P050A indicated?

    YES△Check for poor connections or loose terminals at the throttle body, the MAF sensor/IAT sensor, and the PCM, then go to step 1.

    NO△Go to step 26.

26. Monitor the OBD STATUS for DTC P050A in the DTCs MENU with the HDS.

    Does the screen indicate PASSED?

    YES△Troubleshooting is complete. If any other Temporary DTCs or DTCs were indicated in step 25, go to the indicated DTC's troubleshooting.■

    NO△If the screen indicates FAILED, check for poor connections or loose terminals at the throttle body, the MAF sensor/IAT sensor, and the PCM, then go to step 1. If the screen indicates EXECUTING, keep idling until a result comes on. If the screen indicates OUT OF CONDITION, go to step 23.

DTC P050B: Cold Start Ignition Timing Control System Performance Problem

NOTE: Before you troubleshoot, record all freeze data and any on-board snapshot, and review the general troubleshooting information (see page 11-3).

1. Turn the ignition switch to ON (II).

2. Check for Temporary DTCs or DTCs with the HDS.

   Are any Temporary DTCs or DTCs other than P050B indicated?

   YES△Go to the indicated DTC's troubleshooting. ■

   NO△Go to step 3.

3. Check for a loose connection or a blockage at the intake air duct.

   Is it OK?

   YES△Go to step 4.

   NO△Reconnect or repair the intake air duct, then go to step 25.

4. Check for damage to the air cleaner housing.

   Is it OK?

   YES△Go to step 5.

   NO△Replace the air cleaner housing (see page 11-370), then go to step 25.

5. Check for dirt or debris in the air cleaner element.

   Is it dirty?

   YES△Replace the air cleaner element or remove the debris (see page 11-371), then go to step 25.

   NO△Go to step 6.

6. Let the engine cool until the value of ECT SENSOR 1 is 122 °F (50 °C) or less.

7. Clear the DTC with the HDS.

8. Start the engine, and let it idle for 10 seconds or more.

9. Monitor the OBD STATUS for DTC P050B in the DTCs MENU with the HDS.

   Does the screen indicate FAILED?

   YES△Go to step 10.

   NO△If the screen indicates PASSED, intermittent failure, the system is OK at this time. Check for poor connections or loose terminals at the CKP sensor, the throttle body, the MAF sensor/IAT sensor, ECT sensor 1, ECT sensor 2, and the PCM. If the screen indicates EXECUTING, keep idling until a result comes on. If the screen indicates OUT OF CONDITION, go to step 6 and recheck.

10. Check the ignition timing (see page 4-19).

    Is the ignition timing OK?

    YES△Go to step 12.

    NO△Go to step 11.

11. Check for damage at the CKP sensor (see page 11-231) and the CKP sensor pulser plate (see page 6-21).

    Is the CKP sensor and/or the CKP sensor pulser plate damaged?

    YES△Replace the CKP sensor (see page 11-231) and/or the CKP sensor pulser plate (see page 6-21), then go to step 25.

    NO△Go to step 32.

(cont'd)

DTC Troubleshooting (cont'd)

12. Do the ETCS TEST in the INSPECTION MENU with the HDS.

    Is the THROTTLE ACTUATOR CONTROL VALVE normal?

    YES△Go to step 13.

    NO△Replace the throttle body (see page 11-372), then go to step 25.

13. Start the engine. Hold the engine speed at 3,000 rpm without load (in P or N) until the radiator fan comes on, then let it idle.

14. Monitor the ENGINE SPEED in the DATA LIST with the HDS, and hold the engine speed at 2,500 rpm for at least 30 seconds.

15. While holding the engine speed at 2,500 rpm, check the MAF SENSOR in the DATA LIST with the HDS.

    Is there about 3.9—5.5 gm/s?

    YES△Go to step 16.

    NO△Replace the MAF sensor/IAT sensor (see page 11-232), then go to step 25.

16. Turn the ignition switch to LOCK (0).

17. Drain the coolant (see page 10-6).

18. Remove ECT sensor 1 (see page 11-233), and ECT sensor 2 (see page 11-233).

19. Allow the sensors to cool to ambient temperature.

20. Note the ambient temperature.

21. Connect ECT sensor 1 to its 2P connector, and ECT sensor 2 to its 2P connector, but do not install them.

22. Turn the ignition switch to ON (II).

23. Note the value of ECT SENSOR 1 and ECT SENSOR 2 quickly in the DATA LIST with the HDS.

24. Compare the value of ECT SENSOR 1 and the ambient temperature, and the value of ECT SENSOR 2 and the ambient temperature individually.

    Does either sensor differ more than 5.4 °F (3 °C) from the ambient temperature?

    YES△Replace the sensor that differed more than 5.4 °F (3 °C) from the ambient temperature, then go to step 25.

    NO△Check and repair any problems with the following items. Repair or replace them if needed, then go to step 25. If every item is OK, go to step 32.

    - Engine compression and cylinder leakdown
    - Valve pause system
    - Engine oil
    - A/C system

25. Turn the ignition switch to ON (II).

26. Reset the PCM with the HDS.

27. Do the PCM idle learn procedure (see page 11-333).

28. Let the engine cool until the value of ECT SENSOR 1 is 122 °F (50 °C) or less.

29. Start the engine, and let it idle for 10 seconds or more.

30. Check for Temporary DTCs or DTCs with the HDS.

    Is DTC P050B indicated?

    YES△Check for poor connections or loose terminals at the CKP sensor, the throttle body, the MAF sensor/IAT sensor, ECT sensor 1, ECT sensor 2, and the PCM, then go to step 1.

    NO△Go to step 31.

31. Monitor the OBD STATUS for DTC P050B in the DTCs MENU with the HDS.

    Does the screen indicate PASSED?

    YES△Troubleshooting is complete. If any other Temporary DTCs or DTCs were indicated in step 30, go to the indicated DTC's troubleshooting.■

    NO△If the screen indicates FAILED, check for poor connections or loose terminals at the CKP sensor, the throttle body, the MAF sensor/IAT sensor, ECT sensor 1, ECT sensor 2, and the PCM, then go to step 1. If the screen indicates EXECUTING, keep idling until a result comes on. If the screen indicates OUT OF CONDITION, go to step 28.

32. Update the PCM if it does not have the latest software (see page 11-236), or substitute a known-good PCM (see page 11-7).

33. Let the engine cool until the value of ECT SENSOR 1 is 122 °F (50 °C) or less.

34. Start the engine, and let it idle for 10 seconds.

35. Check for Temporary DTCs or DTCs with the HDS.

    Is DTC P050B indicated?

    YES△Check for poor connections or loose terminals at the CKP sensor, the throttle body, the MAF/IAT sensor, ECT sensor 1, ECT sensor 2, and the PCM. If the PCM was updated, substitute a known-good PCM (see page 11-7), then go to step 33. If the PCM was substituted, go to step 1.

    NO△Go to step 36.

36. Monitor the OBD STATUS for DTC P050B in the DTCs MENU with the HDS.

    Does the screen indicate PASSED?

    YES△If the PCM was updated, troubleshooting is complete. If the PCM was substituted, replace the original PCM (see page 11-238). If any other Temporary DTCs or DTCs were indicated in step 35, go to the indicated DTC's troubleshooting.■

    NO△If the screen indicates FAILED, check for poor connections or loose terminals at the CKP sensor, the throttle body, the MAF/IAT sensor, ECT sensor 1, ECT sensor 2, and the PCM. If the PCM was updated, substitute a known-good PCM (see page 11-7), then go to step 33. If the PCM was substituted, go to step 1. If the screen indicates EXECUTING, keep driving until a result comes on. If the screen indicates OUT OF CONDITION, go to step 33.

DTC Troubleshooting (cont'd)

DTC P0563: PCM Power Source Circuit Unexpected Voltage

NOTE: Before you troubleshoot, record all freeze data and any on-board snapshot, and review the general troubleshooting information (see page 11-3).

1. Turn the ignition switch to ON (II).
2. Clear the DTC with the HDS.
3. Turn the ignition switch to LOCK (0).
4. Wait 10 seconds.
5. Turn the ignition switch to ON (II).
6. Check for Temporary DTCs or DTCs with the HDS.

   Is DTC P0563 indicated?

   YES△Go to step 7.

   NO△Intermittent failure, the system is OK at this time. Check for poor connections or loose terminals at PGM-FI main relay 1 and the PCM.■

7. Turn the ignition switch to LOCK (0).
8. Jump the SCS line with the HDS.
9. Disconnect PCM connector A (44P).
10. Measure the voltage between PCM connector terminal A6 and body ground.

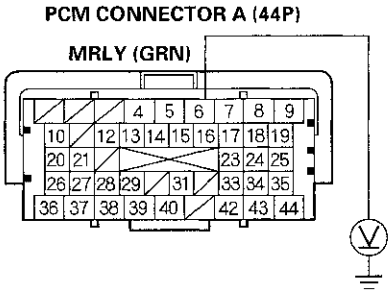

Terminal side of female terminals

Is there battery voltage?

YES△Go to step 13.

NO△Go to step 11.

11. Remove PGM-FI main relay 1 (C) from the under-hood fuse/relay box.

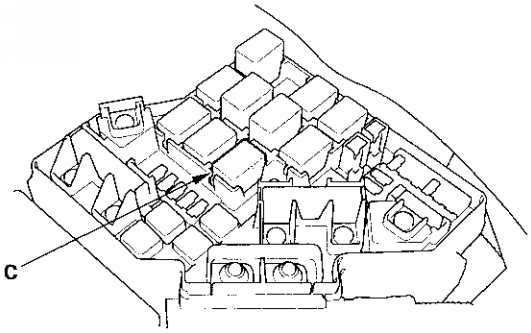

12. Check for continuity between PCM connector terminal A6 and body ground.

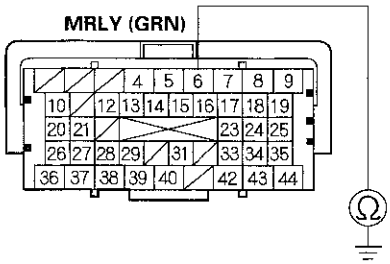

Terminal side of female terminals

Is there continuity?

YES△Repair short in the wire between the PCM (A6) and PGM-FI main relay 1, then go to step 16.

NO△Go to step 15.

13. Remove PGM-FI main relay 1 (C) from the under-hood fuse/relay box.

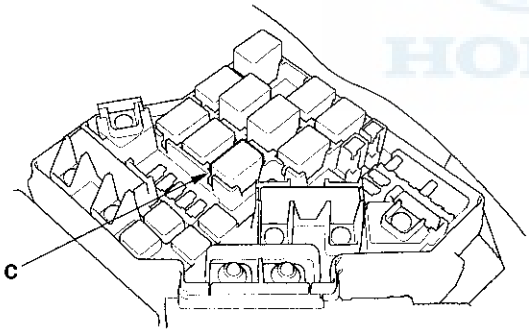

14. Measure the voltage between PCM connector terminal A8 and body ground.

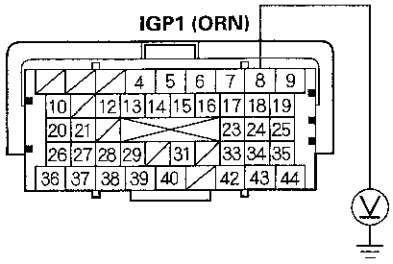

Terminal side of female terminals

Is there battery voltage?

YES△Repair short to power in the wire between the PCM (A8) and PGM-FI main relay 1, then go to step 16.

NO△Go to step 15.

15. Test PGM-FI main relay 1 (see page 22-64).

Is PGM-FI main relay 1 OK?

YES△Go to step 23.

NO△Replace PGM-FI main relay 1, then go to step 16.

(cont'd)

DTC Troubleshooting (cont'd)

16. Reconnect all connectors.

17. Turn the ignition switch to ON (II).

18. Reset the PCM with the HDS.

19. Do the PCM idle learn procedure (see page 11-333).

20. Turn the ignition switch to LOCK (0).

21. Wait 10 seconds.

22. Check for Temporary DTCs or DTCs with the HDS.

    Is DTC P0563 indicated?

    YES△Check for poor connections or loose terminals at PGM-FI main relay 1 and the PCM, then go to step 1.

    NO△Troubleshooting is complete. If any other Temporary DTCs or DTCs are indicated, go to the indicated DTC's troubleshooting.■

23. Reconnect all connectors.

24. Update the PCM if it does not have the latest software (see page 11-236), or substitute a known-good PCM (see page 11-7).

25. Check for Temporary DTCs or DTCs with the HDS.

    Is DTC P0563 indicated?

    YES△Check for poor connections or loose terminals at PGM-FI main relay 1 and the PCM. If the PCM was updated, substitute a known-good PCM (see page 11-7), then recheck. If the PCM was substituted, go to step 1.

    NO△If the PCM was updated, troubleshooting is complete. If the PCM was substituted, replace the original PCM (see page 11-238). If any other Temporary DTCs or DTCs are indicated, go to the indicated DTC's troubleshooting.■

DTC P0602: PCM Programming Error

NOTE:
- Before you troubleshoot, record all freeze data and any on-board snapshot, and review the general troubleshooting information (see page 11-3).
- This DTC is indicated when a PCM update is not completed.
- Do not turn the ignition switch to ACC (I) or to LOCK (0) while updating the PCM. If you do, the PCM can be damaged.

1. Do the PCM update procedure (see page 11-236).

2. Check for Temporary DTCs or DTCs with the HDS.

   Is DTC P0602 indicated?

   YES△Replace the original PCM (see page 11-238).■

   NO△Update is complete. If any other Temporary DTCs or DTCs are indicated, go to the indicated DTC's troubleshooting.■

DTC P0603: PCM Internal Control Module Keep Alive Memory (KAM) Error ('06-08 models)

DTC P062F: PCM Internal Control Module Keep Alive Memory (KAM) Error ('09 model)

NOTE:
- Before you troubleshoot, record all freeze data and any on-board snapshot, and review the general troubleshooting information (see page 11-3).
- Information marked with an asterisk (*) applies to '06-08 models.
- Information marked with a double asterisk (**) applies to '09 model.

1. Turn the ignition switch to ON (II).
2. Clear the DTC with the HDS.
3. Check for Temporary DTCs or DTCs with the HDS.

   Are any Temporary DTCs or DTCs indicated?

   YES△Go to step 4.

   NO△Intermittent failure, the system is OK at this time.■

4. Update the PCM if it does not have the latest software (see page 11-236), or substitute a known-good PCM (see page 11-7).
5. Check for Temporary DTCs or DTCs with the HDS.

   Is DTC P0603 (P062F)** indicated?*

   YES△If the PCM was updated, substitute a known-good PCM (see page 11-7), then recheck. If the PCM was substituted, go to step 1.

   NO△If the PCM was updated, troubleshooting is complete. If the PCM was substituted, replace the original PCM (see page 11-238). If any other Temporary DTCs or DTCs are indicated, go to the indicated DTC's troubleshooting.■

DTC P0606: PCM Processor Malfunction

NOTE: Before you troubleshoot, record all freeze data and any on-board snapshot, and review the general troubleshooting information (see page 11-3).

1. Turn the ignition switch to ON (II).
2. Clear the DTC with the HDS.
3. Turn the ignition switch to LOCK (0).
4. Turn the ignition switch to ON (II).
5. Wait 40 seconds.
6. Check for Temporary DTCs or DTCs with the HDS.

   Is DTC P0606 indicated?

   YES△Go to step 7.

   NO△Intermittent failure, the system is OK at this time.■

7. Update the PCM if it does not have the latest software (see page 11-236), or substitute a known-good PCM (see page 11-7).
8. Turn the ignition switch to LOCK (0).
9. Turn the ignition switch to ON (II).
10. Wait 40 seconds.
11. Check for Temporary DTCs or DTCs with the HDS.

    Is DTC P0606 indicated?

    YES△If the PCM was updated, substitute a known-good PCM (see page 11-7), then go to step 8. If the PCM was substituted, go to step 1.

    NO△If the PCM was updated, troubleshooting is complete. If the PCM was substituted, replace the original PCM (see page 11-238). If any other Temporary DTCs or DTCs are indicated, go to the indicated DTC's troubleshooting.■

DTC Troubleshooting (cont'd)

DTC P060A: PCM (A/T system) Internal Control Module Malfunction

NOTE: Before you troubleshoot, record all freeze data and any on-board snapshot, and review the general troubleshooting information (see page 11-3).

1. Turn the ignition switch to ON (II).
2. Clear the DTC with the HDS.
3. Check for Temporary DTCs or DTCs with the HDS.

   Is DTC P060A indicated?

   YES△Go to step 4.

   NO△Intermittent failure, the system is OK at this time.■

4. Update the PCM if it does not have the latest software (see page 11-236), or substitute a known-good PCM (see page 11-7).
5. Check for Temporary DTCs or DTCs with the HDS.

   Is DTC P060A indicated?

   YES△If the PCM was updated, substitute a known-good PCM (see page 11-7), then recheck. If the PCM was substituted, go to step 1.

   NO△If the PCM was updated, troubleshooting is complete. If the PCM was substituted, replace the original PCM (see page 11-238). If any other Temporary DTCs or DTCs are indicated, go to the indicated DTC's troubleshooting.■

DTC P0630: VIN Not Programmed or Mismatch

NOTE:
- Before you troubleshoot, record all freeze data and any on-board snapshot, and review the general troubleshooting information (see page 11-3).
- This DTC is stored only when the PCM does not have the VIN information of the vehicle. Use the HDS to input the missing VIN information.
- Information marked with an asterisk (*) applies to '06-08 models.
- Information marked with a double asterisk (**) applies to '09 model.

1. Turn the ignition switch to ON (II).
2. Check the VIN with the HDS.

   Does the HDS show the vehicle's VIN?

   YES△Go to step 5.

   NO△Go to step 3.

3. Input the VIN to the PCM with the HDS.

   Does the screen show COMPLETE?

   YES△Go to step 5.

   NO△Go to step 4.

4. Check for DTCs with the HDS.

   Is DTC P0603 (P062F)** indicated?*

   YES△Go to the DTC P0603* (P062F)** troubleshooting (see page 11-135).■

   NO△Go to step 9.

5. Clear the DTC with the HDS.
6. Turn the ignition switch to LOCK (0).
7. Turn the ignition switch to ON (II), and wait 5 seconds.

8. Check for Temporary DTCs or DTCs with the HDS.

   Is DTC P0630 indicated?

   YES△Go to step 9.

   NO△Intermittent failure, the system is OK at this time. If any other Temporary DTCs or DTCs are indicated, go to the indicated DTC's troubleshooting.■

9. Update the PCM if it does not have the latest software (see page 11-236), or substitute a known-good PCM (see page 11-7).

10. Check for Temporary DTCs or DTCs with the HDS.

    Is DTC P0630 indicated?

    YES△If the PCM was updated, substitute a known-good PCM (see page 11-7), then recheck. If the PCM was substituted, go to step 1.

    NO△If the PCM was updated, troubleshooting is complete. If the PCM was substituted, replace the original PCM (see page 11-238). If any other Temporary DTCs or DTCs are indicated, go to the indicated DTC's troubleshooting.■

DTC P0685: PCM Power Control Circuit/ Internal Circuit Malfunction

NOTE:
- Before you troubleshoot, record all freeze data and any on-board snapshot, and review the general troubleshooting information (see page 11-3).
- If the problem doesn't return after you clear the DTC, or it this DTC is stored intermittently, check for loose terminals at the IGP line connectors before replacing the PCM.

1. Turn the ignition switch to ON (II).
2. Clear the DTC with the HDS.
3. Start the engine, and let it idle for 30 seconds.
4. Turn the ignition switch to LOCK (0).
5. Start the engine, and let it idle for 30 seconds.
6. Turn the ignition switch to LOCK (0).
7. Turn the ignition switch to ON (II).
8. Check for Temporary DTCs or DTCs with the HDS.

   Is DTC P0685 indicated?

   YES△Go to step 9.

   NO△Intermittent failure, the system is OK at this time.■

9. Update the PCM if it does not have the latest software (see page 11-236), or substitute a known-good PCM (see page 11-7).
10. Start the engine, and let it idle for 30 seconds.
11. Turn the ignition switch to LOCK (0).
12. Start the engine, and let it idle for 30 seconds.
13. Turn the ignition switch to LOCK (0).
14. Turn the ignition switch to ON (II).

(cont'd)

DTC Troubleshooting (cont'd)

15. Check for Temporary DTCs or DTCs with the HDS.

    Is DTC P0685 indicated?

    YES△If the PCM was updated, substitute a known-good PCM (see page 11-7), then go to step 10. If the PCM was substituted, go to step 1.

    NO△If the PCM was updated, troubleshooting is complete. If the PCM was substituted, replace the original PCM (see page 11-238). If any other Temporary DTCs or DTCs are indicated, go to the indicated DTC's troubleshooting.■

DTC P1109: BARO Sensor Circuit Out of Range High

NOTE: Before you troubleshoot, record all freeze data and any on-board snapshot, and review the general troubleshooting information (see page 11-3).

1. Reset the PCM with the HDS.

2. Start the engine.

3. Check for Temporary DTCs or DTCs with the HDS.

   Is DTC P1109 indicated?

   YES△Go to step 4.

   NO△Intermittent failure, the system is OK at this time.■

4. Update the PCM if it does not have the latest software (see page 11-236), or substitute a known-good PCM (see page 11-7).

5. Check for Temporary DTCs or DTCs with the HDS.

   Is DTC P1109 indicated?

   YES△If the PCM was updated, substitute a known-good PCM (see page 11-7), then recheck. If the PCM was substituted, go to step 1.

   NO△If the PCM was updated, troubleshooting is complete. If the PCM was substituted, replace the original PCM (see page 11-238). If any other Temporary DTCs or DTCs are indicated, go to the indicated DTC's troubleshooting.■

DTC P1116: ECT Sensor 1 Range/ Performance Problem

NOTE:
- Before you troubleshoot, record all freeze data and any on-board snapshot, and review the general troubleshooting information (see page 11-3).
- If DTC P0111 is stored at the same time as DTC P1116, troubleshoot DTC P0111 first, then recheck for DTC P1116.

1. Check for poor connections or loose terminals at ECT sensor 1 and ECT sensor 2.

   Are the connections and terminals OK?

   YES△Go to step 2.

   NO△Repair the connectors or terminals, then go to step 27.

2. Turn the ignition switch to ON (II).

3. Check for Temporary DTCs or DTCs with the HDS.

   Are DTC P1116 and P2183 indicated at the same time?

   YES△Go to step 15.

   NO△Go to step 4.

4. Start the engine, and let it idle for 10 minutes.

5. Check ECT SENSOR 1 in the DATA LIST with the HDS.

   Is about 100 °F (38 °C) or less indicated?

   YES△Replace ECT sensor 1 (see page 11-233), then go to step 27.

   NO△Go to step 6.

6. Turn the ignition switch to LOCK (0).

7. Drain the coolant (see page 10-6).

8. Remove ECT sensor 1 (see page 11-233).

9. Allow ECT sensor 1 to cool to ambient temperature.

10. Note the ambient temperature.

11. Connect ECT sensor 1 to its 2P connector, but do not install it on the engine.

12. Turn the ignition switch to ON (II).

13. Note the value of ECT SENSOR 1 quickly in the DATA LIST with the HDS.

14. Compare the value of ECT SENSOR 1 and the ambient temperature.

    Does the value of ECT SENSOR 1 differ 5.4 °F (3 °C) or more from the ambient temperature?

    YES△Replace ECT sensor 1 (see page 11-233), then go to step 27.

    NO△Intermittent failure, the system is OK at this time. Check for poor connections or loose terminals at ECT sensor 1, ECT sensor 2, and the PCM.■

15. Start the engine, and let it idle for 10 minutes.

16. Check ECT SENSOR 1 in the DATA LIST with the HDS.

    Is about 100 °F (38 °C) or less indicated?

    YES△Replace ECT sensor 1 (see page 11-233), then go to step 27.

    NO△Go to step 17.

17. Let the engine idle for 10 minutes.

18. Check ECT SENSOR 2 in the DATA LIST with the HDS.

    Is about 131 °F (55 °C) or less indicated?

    YES△Replace ECT sensor 2 (see page 11-233), then go to step 27.

    NO△Go to step 19.

(cont'd)

DTC Troubleshooting (cont'd)

19. Turn the ignition switch to LOCK (0).

20. Drain the coolant (see page 10-6).

21. Remove ECT sensor 1 (see page 11-233) and ECT sensor 2 (see page 11-233).

22. Allow the sensors to cool to ambient temperature.

23. Note the ambient temperature.

24. Connect ECT sensor 1 to its 2P connector, and ECT sensor 2 to its 2P connector, but do not install them.

25. Note the value of ECT SENSOR 1 and ECT SENSOR 2 quickly in the DATA LIST with the HDS.

26. Compare the value of ECT SENSOR 1 and the ambient temperature, and the value of ECT SENSOR 2 and the ambient temperature individually.

    Does either sensor differ more than 5.4 °F (3 °C) from the ambient temperature?

    YES△Replace the sensor that differed more than 5.4 °F (3 °C) from the ambient temperature, then go to step 27.

    NO△Intermittent failure, the system is OK at this time. Check for poor connections or loose terminals at ECT sensor 1, ECT sensor 2, and the PCM.■

27. Turn the ignition switch to ON (II).

28. Reset the PCM with the HDS.

29. Do the PCM idle learn procedure (see page 11-333).

30. Check for Temporary DTCs or DTCs with the HDS.

    Is DTC P1116 indicated?

    YES△Check for poor connections or loose terminals at ECT sensor 1, ECT sensor 2, and the PCM, then go to step 1.

    NO△Troubleshooting is complete. If any other Temporary DTCs or DTCs are indicated, go to the indicated DTC's troubleshooting.■

DTC P1157: A/F Sensor (Sensor 1) AFS Circuit Malfunction

NOTE: Before you troubleshoot, record all freeze data and any on-board snapshot, and review the general troubleshooting information (see page 11-3).

1. Turn the ignition switch to ON (II).
2. Clear the DTC with the HDS.
3. Start the engine, and wait 1 minute.
4. Check for Temporary DTCs or DTCs with the HDS.

   Is DTC P1157 indicated?

   YES△Go to step 5.

   NO△Intermittent failure, the system is OK at this time. Check for poor connections or loose terminals at the A/F sensor (Sensor 1) and the PCM. ■

5. Turn the ignition switch to LOCK (0).
6. Jump the SCS line with the HDS.
7. Disconnect the A/F sensor (Sensor 1) 4P connector.
8. Disconnect PCM connector C (44P).
9. Check for continuity between A/F sensor (Sensor 1) 4P connector terminal No. 2 and PCM connector terminal C29.

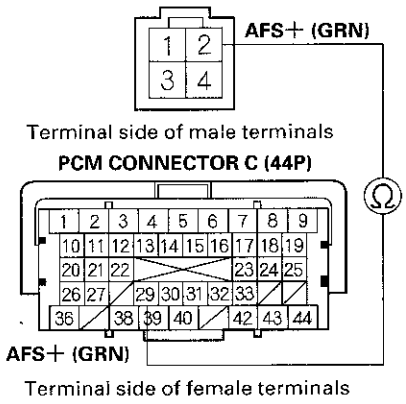

   Is there continuity?

   YES△Go to step 10.

   NO△Repair open in the wire between the PCM (C29) and the A/F sensor (Sensor 1), then go to step 12.

(cont'd)

DTC Troubleshooting (cont'd)

10. Check for continuity between A/F sensor (Sensor 1) 4P connector terminal No. 1 and PCM connector terminal C30.

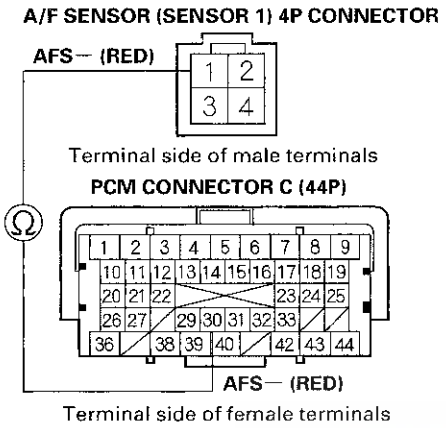

Is there continuity?

YES△Go to step 11.

NO△Repair open in the wire between the PCM (C30) and the A/F sensor (Sensor 1), then go to step 12.

11. Replace the A/F sensor (Sensor 1) (see page 11-230).

12. Reconnect all connectors.

13. Turn the ignition switch to ON (II).

14. Reset the PCM with the HDS.

15. Do the PCM idle learn procedure (see page 11-333).

16. Check for Temporary DTCs or DTCs with the HDS.

    Is DTC P1157 indicated?

    YES△Check for poor connections or loose terminals at the A/F sensor (Sensor 1) and the PCM, then go to step 1. If the connections and terminals are OK, go to step 18.

    NO△Go to step 17.

17. Monitor the OBD STATUS for DTC P1157 in the DTCs MENU with the HDS.

    Does the screen indicate PASSED?

    YES△Troubleshooting is complete. If any other Temporary DTCs or DTCs were indicated in step 16, go to the indicated DTC's troubleshooting. ■

    NO△If the screen indicates FAILED, check for poor connections or loose terminals at the A/F sensor (Sensor 1) and the PCM, then go to step 1. If the screen indicates NOT COMPLETED, keep idling until a result comes on.

18. Update the PCM if it does not have the latest software (see page 11-236), or substitute a known-good PCM (see page 11-7).

19. Start the engine, and let it idle.

20. Check for Temporary DTCs or DTCs with the HDS.

    Is DTC P1157 indicated?

    YES△If the PCM was updated, substitute a known-good PCM (see page 11-7), then go to step 19. If the PCM was substituted, go to step 1.

    NO△Go to step 21.

21. Monitor the OBD STATUS for DTC P1157 in the DTCs MENU with the HDS.

    Does the screen indicate PASSED?

    YES△If the PCM was updated, troubleshooting is complete. If the PCM was substituted, replace the original PCM (see page 11-238). If any other Temporary DTCs or DTCs were indicated in step 20, go to the indicated DTC's troubleshooting.■

    NO△If the screen indicates FAILED, go to step 1. If the PCM was updated, substitute a known-good PCM (see page 11-7), then go to step 19. If the PCM was substituted, go to step 1. If the screen indicates NOT COMPLETED, keep idling until a result comes on.

DTC P1172: A/F Sensor (Sensor 1) Circuit Out of Range High

NOTE: Before you troubleshoot, record all freeze data and any on-board snapshot, and review the general troubleshooting information (see page 11-3).

1. Turn the ignition switch to ON (II).

2. Clear the DTC with the HDS.

3. Start the engine. Hold the engine speed at 3,000 rpm without load (in P or N) until the radiator fan comes on, then let it idle.

4. Monitor the OBD STATUS for DTC P1172 in the DTCs MENU with the HDS.

   Does the screen indicate FAILED?

   YES△Go to step 5.

   NO△If the screen indicates PASSED, intermittent failure, the system is OK at this time. Check for poor connections or loose terminals at the A/F sensor (Sensor 1) and the PCM. If the screen indicates EXECUTING, keep idling until a result comes on. If the screen indicates OUT OF CONDITION, go to step 3 and recheck.

5. Turn the ignition switch to LOCK (0).

6. Replace the A/F sensor (Sensor 1) (see page 11-230).

7. Turn the ignition switch to ON (II).

8. Reset the PCM with the HDS.

9. Do the PCM idle learn procedure (see page 11-333).

10. Start the engine. Hold the engine speed at 3,000 rpm without load (in P or N) until the radiator fan comes on, then let it idle.

(cont'd)

DTC Troubleshooting (cont'd)

11. Check for Temporary DTCs or DTCs with the HDS.

    Is DTC P1172 indicated?

    YES△Check for poor connections or loose terminals at the A/F sensor (Sensor 1) and the PCM, then go to step 1.

    NO△Go to step 12.

12. Monitor the OBD STATUS for DTC P1172 in the DTCs MENU with the HDS.

    Does the screen indicate PASSED?

    YES△Troubleshooting is complete. If any other Temporary DTCs or DTCs were indicated in step 11, go to the indicated DTC's troubleshooting.■

    NO△If the screen indicates FAILED, check for poor connections or loose terminals at the A/F sensor (Sensor 1) and the PCM, then go to step 1. If the screen indicates EXECUTING, keep idling until a result comes on. If the screen indicates OUT OF CONDITION, go to step 10.

DTC P1297: ELD Circuit Low Voltage

NOTE: Before you troubleshoot, record all freeze data and any on-board snapshot, and review the general troubleshooting information (see page 11-3).

1. Turn the ignition switch to ON (II).
2. Check the ELD in the DATA LIST with the HDS.

   Is 72 A or more indicated?

   YES△Go to step 3.

   NO△Intermittent failure, the system is OK at this time. Check for poor connections or loose terminals at the ELD and the PCM.■

3. Turn the ignition switch to LOCK (0).
4. Disconnect the ELD 3P connector.
5. Turn the ignition switch to ON (II).
6. Check the ELD in the DATA LIST with the HDS.

   Is 72 A or more indicated?

   YES△Go to step 7.

   NO△Go to step 11.

7. Turn the ignition switch to LOCK (0).
8. Jump the SCS line with the HDS.
9. Disconnect PCM connector A (44P).

10. Check for continuity between PCM connector terminal A23 and body ground.

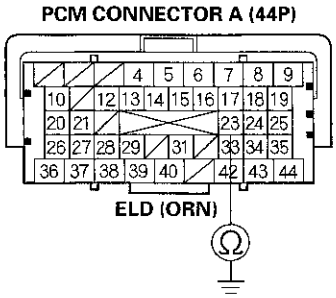

Terminal side of female terminals

Is there continuity?

YES△Repair short in the wire between the PCM (A23) and the ELD, then go to step 13.

NO△Go to step 20.

11. Turn the ignition switch to LOCK (0).

12. Replace the ELD (see page 11-235).

13. Reconnect all connectors.

14. Turn the ignition switch to ON (II).

15. Reset the PCM with the HDS.

16. Do the PCM idle learn procedure (see page 11-333).

17. Start the engine.

18. Turn on the headlights.

19. Check for Temporary DTCs or DTCs with the HDS.

Is DTC P1297 indicated?

YES△Check for poor connections or loose terminals at the ELD and the PCM, then go to step 1.

NO△Troubleshooting is complete. If any other Temporary DTCs or DTCs are indicated, go to the indicated DTC's troubleshooting.■

20. Reconnect all connectors.

21. Update the PCM if it does not have the latest software (see page 11-236), or substitute a known-good PCM (see page 11-7).

22. Start the engine.

23. Turn on the headlights.

24. Check for Temporary DTCs or DTCs with the HDS.

Is DTC P1297 indicated?

YES△Check for poor connections or loose terminals at the ELD and the PCM. If the PCM was updated, substitute a known-good PCM (see page 11-7), then go to step 22. If the PCM was substituted, go to step 1.

NO△If the PCM was updated, troubleshooting is complete. If the PCM was substituted, replace the original PCM (see page 11-238). If any other Temporary DTCs or DTCs are indicated, go to the indicated DTC's troubleshooting.■

DTC Troubleshooting (cont'd)

DTC P1298: ELD Circuit High Voltage

NOTE: Before you troubleshoot, record all freeze data and any on-board snapshot, and review the general troubleshooting information (see page 11-3).

1. Turn the ignition switch to ON (II).
2. Check the ELD in the DATA LIST with the HDS.

   Is 0.2 A or less indicated?

   YES△Go to step 3.

   NO△Intermittent failure, the system is OK at this time. Check for poor connections or loose terminals at the ELD and the PCM. ■

3. Turn the ignition switch to LOCK (0).
4. Disconnect the ELD 3P connector.
5. Turn the ignition switch to ON (II).
6. Measure the voltage between ELD 3P connector terminal No. 1 and body ground.

ELD 3P CONNECTOR

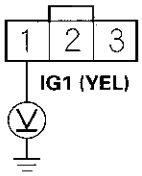

Wire side of female terminals

Is there battery voltage?

YES△Go to step 7.

NO△Check the No. 3 ALTERNATOR (10 A) fuse in the under-dash fuse/relay box. If the fuse is OK, repair open in the wire between the No. 3 ALTERNATOR (10 A) fuse and the ELD, then go to step 12.

7. Jump the SCS line with the HDS.
8. Disconnect PCM connector A (44P).
9. Check for continuity between ELD 3P connector terminal No. 3 and PCM connector terminal A23.

ELD 3P CONNECTOR

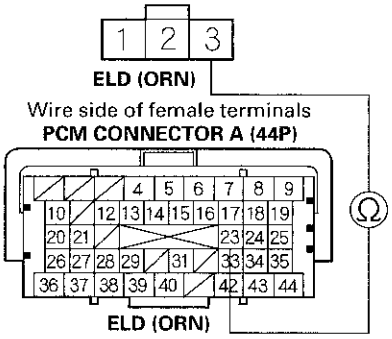

Is there continuity?

YES△Go to step 10.

NO△Repair open in the wire between the PCM (A23) and the ELD, then go to step 12.

10. Check for continuity between ELD 3P connector terminal No. 2 and body ground.

ELD 3P CONNECTOR

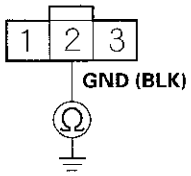

Wire side of female terminals

Is there continuity?

YES△Go to step 11.

NO△Repair open in the wire between the ELD and G301 (see page 22-18), then go to step 12.

11. Replace the ELD (see page 11-235).

12. Reconnect all connectors.

13. Turn the ignition switch to ON (II).

14. Reset the PCM with the HDS.

15. Do the PCM idle learn procedure (see page 11-333).

16. Check for Temporary DTCs or DTCs with the HDS.

Is DTC P1298 indicated?

YES△Go to step 17.

NO△Troubleshooting is complete. If any other Temporary DTCs or DTCs are indicated, go to the indicated DTCs troubleshooting.■

17. Update the PCM if it does not have the latest software (see page 11-236), or substitute a known-good PCM (see page 11-7).

18. Check for Temporary DTCs or DTCs with the HDS.

Is DTC P1298 indicated?

YES△Check for poor connections or loose terminals at the ELD and the PCM. If the PCM was updated, substitute a known-good PCM (see page 11-7), then recheck. If the PCM was substituted, go to step 1.

NO△If the PCM was updated, troubleshooting is complete. If the PCM was substituted, replace the original PCM (see page 11-238). If any other Temporary DTCs or DTCs are indicated, go to the indicated DTC's troubleshooting.■

DTC Troubleshooting (cont'd)

DTC P16D5: F-CAN Malfunction (Internal Malfunction)

NOTE: Before you troubleshoot, record all freeze data and any on-board snapshot, and review the general troubleshooting information (see page 11-3).

1. Turn the ignition switch to ON (II).
2. Clear the DTC with the HDS.
3. Check for Temporary DTCs or DTCs with the HDS.

   Is DTC P16D5 indicated?

   YES△Go to step 4.

   NO△Intermittent failure, the system is OK at this time. If any other Temporary DTCs or DTCs are indicated, go to the indicated DTC's troubleshooting.■

4. Update the PCM if it does not have the latest software (see page 11-236), or substitute a known-good PCM (see page 11-7).
5. Check for Temporary DTCs or DTCs with the HDS.

   Is DTC P16D5 indicated?

   YES△If the PCM was updated, substitute a known-good PCM (see page 11-7), then recheck. If the PCM was substituted, go to step 1.

   NO△If the PCM was updated, troubleshooting is complete. If the PCM was substituted, replace the original PCM (see page 11-238). If any other Temporary DTCs or DTCs are indicated, go to the indicated DTC's troubleshooting.■

DTC P16D6: IMA-CAN Malfunction (Internal Malfunction)

NOTE: Before you troubleshoot, record all freeze data and any on-board snapshot, and review the general troubleshooting information (see page 11-3).

1. Turn the ignition switch to ON (II).
2. Clear the DTC with the HDS.
3. Check for Temporary DTCs or DTCs with the HDS.

   Is DTC P16D6 indicated?

   YES△Go to step 4.

   NO△Intermittent failure, the system is OK at this time. If any other Temporary DTCs or DTCs are indicated, go to the indicated DTC's troubleshooting.■

4. Update the PCM if it does not have the latest software (see page 11-236), or substitute a known-good PCM (see page 11-7).
5. Check for Temporary DTCs or DTCs with the HDS.

   Is DTC P16D6 indicated?

   YES△If the PCM was updated, substitute a known-good PCM (see page 11-7), then recheck. If the PCM was substituted, go to step 1.

   NO△If the PCM was updated, troubleshooting is complete. If the PCM was substituted, replace the original PCM (see page 11-238). If any other Temporary DTCs or DTCs are indicated, go to the indicated DTC's troubleshooting.■

DTC P2183: ECT Sensor 2 Circuit Range/ Performance Problem

NOTE:
- Before you troubleshoot, record all freeze data and any on-board snapshot, and review the general troubleshooting information (see page 11-3).
- If DTC P0111 is stored at the same time as DTC P2183, troubleshoot DTC P0111 first, then recheck for DTC P2183.

1. Check for poor connections or loose terminals at ECT sensor 1 and ECT sensor 2.

   Are the connections and terminals OK?

   YES△Go to step 2.

   NO△Repair the connections or terminals, then go to step 27.

2. Turn the ignition switch to ON (II).

3. Check for Temporary DTCs or DTCs with the HDS.

   Are DTC P1116 and P2183 indicated at the same time?

   YES△Go to step 15.

   NO△Go to step 4.

4. Start the engine, and let it idle for 10 minutes.

5. Check ECT SENSOR 2 in the DATA LIST with the HDS.

   Is about 131 °F (55 °C) or less indicated?

   YES△Replace ECT sensor 2 (see page 11-233), then go to step 27.

   NO△Go to step 6.

6. Turn the ignition switch to LOCK (0).

7. Drain the coolant (see page 10-6).

8. Remove ECT sensor 2 (see page 11-233).

9. Allow ECT sensor 2 to cool to ambient temperature.

10. Note the ambient temperature.

11. Connect ECT sensor 2 to its 2P connector, but do not install it on the engine.

12. Turn the ignition switch to ON (II).

13. Note the value of ECT SENSOR 2 quickly in the DATA LIST with the HDS.

14. Compare the value of ECT SENSOR 2 and the ambient temperature.

    Does ECT SENSOR 2 differ 5.4 °F (3 °C) or more from the ambient temperature?

    YES△Replace ECT sensor 2 (see page 11-233), then go to step 27.

    NO△Intermittent failure, the system is OK at this time. Check for poor connections or loose terminals at ECT sensor 1, ECT sensor 2, and the PCM. ■

15. Start the engine, and let it idle for 10 minutes.

16. Check ECT SENSOR 1 in the DATA LIST with the HDS.

    Is about 100 °F (38 °C) or less indicated?

    YES△Replace ECT sensor 1 (see page 11-233), then go to step 27.

    NO△Go to step 17.

17. Let the engine idle for 10 minutes.

18. Check ECT SENSOR 2 in the DATA LIST with the HDS.

    Is about 131 °F (55 °C) or less indicated?

    YES△Replace ECT sensor 2 (see page 11-233), then go to step 27.

    NO△Go to step 19.

(cont'd)

DTC Troubleshooting (cont'd)

19. Turn the ignition switch to LOCK (0).

20. Drain the coolant (see page 10-6).

21. Remove ECT sensor 1 (see page 11-233) and ECT sensor 2 (see page 11-233).

22. Allow the sensors to cool to ambient temperature.

23. Note the ambient temperature.

24. Connect the ECT sensors to their 2P connectors, but do not install them.

25. Note the value of ECT SENSOR 1 and ECT SENSOR 2 quickly in the DATA LIST with the HDS.

26. Compare the value of ECT SENSOR 1 and the ambient temperature, and the value of ECT SENSOR 2 and the ambient temperature individually.

    Does either sensor differ more than 5.4 °F (3 °C) from the ambient temperature?

    YES△Replace the sensor that differed more than 5.4 °F (3 °C) from the ambient temperature, then go to step 27.

    NO△Intermittent failure, the system is OK at this time. Check for poor connections or loose terminals at ECT sensor 1, ECT sensor 2, and the PCM.■

27. Turn the ignition switch to ON (II).

28. Reset the PCM with the HDS.

29. Do the PCM idle learn procedure (see page 11-333).

30. Check for Temporary DTCs or DTCs with the HDS.

    Is DTC P2183 Indicated?

    YES△Check for poor connections or loose terminals at ECT sensor 1, ECT sensor 2, and the PCM, then go to step 1.

    NO△Troubleshooting is complete. If any other Temporary DTCs or DTCs are indicated, go to the indicated DTC's troubleshooting.■

DTC P2184: ECT Sensor 2 Circuit Low Voltage

NOTE:
- Before you troubleshoot, record all freeze data and any on-board snapshot, and review the general troubleshooting information (see page 11-3).
- Information marked with an asterisk (*) applies to '07-09 models.

1. Turn the ignition switch to ON (II).

2. Check ECT SENSOR 2 in the DATA LIST with the HDS.

   Is about 356 °F (180 °C) or more, or 0.08 V or less indicated?

   YES△Go to step 3.

   NO△Intermittent failure, the system is OK at this time. Check for poor connections or loose terminals at ECT sensor 2 and the PCM.■

3. Turn the ignition switch to LOCK (0).

4. Disconnect the ECT sensor 2 2P connector.

5. Turn the ignition switch to ON (II).

6. Check ECT SENSOR 2 in the DATA LIST with the HDS.

   Is about 356 °F (180 °C) or more, or 0.08 V or less indicated?

   YES△Go to step 7.

   NO△Go to step 11.

7. Turn the ignition switch to LOCK (0).

8. Jump the SCS line with the HDS.

9. Disconnect PCM connector A (44P).

10. Check for continuity between ECT sensor 2 2P connector terminal No. 2 (1)* and body ground.

'06 model

ECT SENSOR 2 2P CONNECTOR

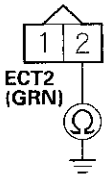

Wire side of female terminals

'07-09 models

ECT SENSOR 2 2P CONNECTOR

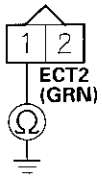

Wire side of female terminals

Is there continuity?

YES△Repair short in the wire between ECT sensor 2 and the PCM (A33), then go to step 13.

NO△Go to step 18.

(cont'd)

DTC Troubleshooting (cont'd)

11. Turn the ignition switch to LOCK (0).

12. Replace ECT sensor 2 (see page 11-233).

13. Reconnect all connectors.

14. Turn the ignition switch to ON (II).

15. Reset the PCM with the HDS.

16. Do the PCM idle learn procedure (see page 11-333).

17. Check for Temporary DTCs or DTCs with the HDS.

    Is DTC P2184 indicated?

    YES△Check for poor connections or loose terminals at ECT sensor 2 and the PCM, then go to step 1.

    NO△Troubleshooting is complete. If any other Temporary DTCs or DTCs are indicated, go to the indicated DTC's troubleshooting.■

18. Reconnect all connectors.

19. Update the PCM if it does not have the latest software (see page 11-236), or substitute a known-good PCM (see page 11-7).

20. Check for Temporary DTCs or DTCs with the HDS.

    Is DTC P2184 indicated?

    YES△Check for poor connections or loose terminals at ECT sensor 2 and the PCM. If the PCM was updated, substitute a known-good PCM (see page 11-7), then recheck. If the PCM was substituted, go to step 1.

    NO△If the PCM was updated, troubleshooting is complete. If the PCM was substituted, replace the original PCM (see page 11-238). If any other Temporary DTCs or DTCs are indicated, go to the indicated DTC's troubleshooting.■

DTC P2185: ECT Sensor 2 Circuit High Voltage

NOTE:
- Before you troubleshoot, record all freeze data and any on-board snapshot, and review the general troubleshooting information (see page 11-3).
- Information marked with an asterisk (*) applies to '07-09 models.

1. Turn the ignition switch to ON (II).

2. Check ECT SENSOR 2 in the DATA LIST with the HDS.

   Is about −40 °F (−40 °C) or less, or 4.92 V or more indicated?

   YES△Go to step 3.

   NO△Intermittent failure, the system is OK at this time. Check for poor connections or loose terminals at ECT sensor 2 and the PCM.■

3. Turn the ignition switch to LOCK (0).

4. Disconnect the ECT sensor 2 2P connector.

5. Connect ECT sensor 2 2P connector terminals No. 1 and No. 2 with a jumper wire.

ECT SENSOR 2 2P CONNECTOR

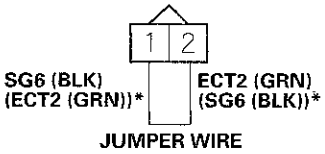

Wire side of female terminals

6. Turn the ignition switch to ON (II).

7. Check ECT SENSOR 2 in the DATA LIST with the HDS.

   Is about −40 °F (−40 °C) or less, or 4.92 V or more indicated?

   YES△Go to step 8.

   NO△Go to step 20.

8. Turn the ignition switch to LOCK (0).

9. Remove the jumper wire from ECT sensor 2 2P connector.

10. Turn the ignition switch to ON (II).

11. Measure the voltage between ECT sensor 2 2P connector terminal No. 2 (1)* and body ground.

'06 model

ECT SENSOR 2 2P CONNECTOR

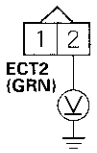

Wire side of female terminals

'07-09 models

ECT SENSOR 2 2P CONNECTOR

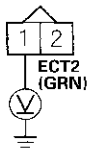

Wire side of female terminals

Is there about 5 V?

YES△Go to step 12.

NO△Go to step 16.

12. Turn the ignition switch to LOCK (0).

13. Jump the SCS line with the HDS.

14. Disconnect PCM connector A (44P).

15. Check for continuity between ECT sensor 2 2P connector terminal No. 1 (2)* and PCM connector terminal A9.

'06 model

ECT SENSOR 2 2P CONNECTOR

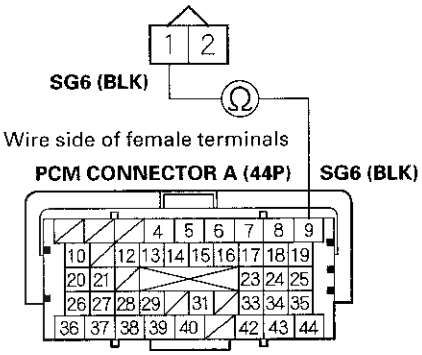

Terminal side of female terminals

'07-09 models

ECT SENSOR 2 2P CONNECTOR

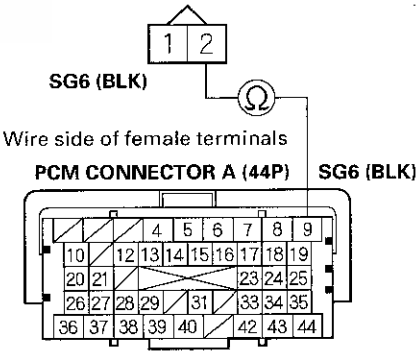

Terminal side of female terminals

Is there continuity?

YES△Go to step 27.

NO△Repair open in the wire between the PCM (A9) and ECT sensor 2, then go to step 22.

(cont'd)

DTC Troubleshooting (cont'd)

16. Turn the ignition switch to LOCK (0).

17. Jump the SCS line with the HDS.

18. Disconnect PCM connector A (44P).

19. Check for continuity between ECT sensor 2 2P connector terminal No. 2 (1)* and PCM connector terminal A33.

'06 model

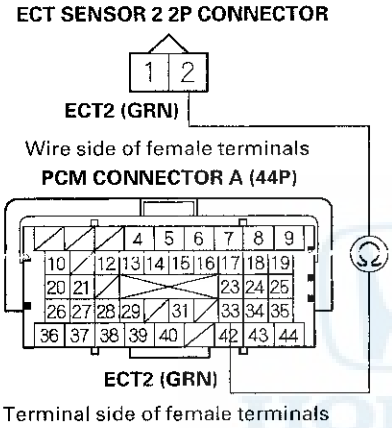

'07-09 models

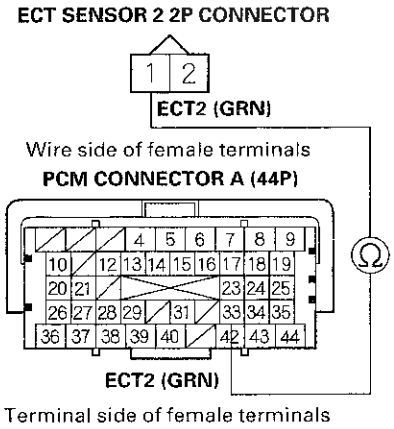

Is there continuity?

YES△Go to step 27.

NO△Repair open in the wire between the PCM (A33) and ECT sensor 2, then go to step 22.

20. Turn the ignition switch to LOCK (0).

21. Replace ECT sensor 2 (see page 11-233).

22. Reconnect all connectors.

23. Turn the ignition switch to ON (II).

24. Reset the PCM with the HDS.

25. Do the PCM idle learn procedure (see page 11-333).

26. Check for Temporary DTCs or DTCs with the HDS.

Is DTC P2185 indicated?

YES△Check for poor connections or loose terminals at ECT sensor 2 and the PCM, then go to step 1.

NO△Troubleshooting is complete. If any other Temporary DTCs or DTCs are indicated, go to the indicated DTC's troubleshooting.■

27. Reconnect all connectors.

28. Update the PCM if it does not have the latest software (see page 11-236), or substitute a known-good PCM (see page 11-7).

29. Check for Temporary DTCs or DTCs with the HDS.

Is DTC P2185 indicated?

YES△Check for poor connections or loose terminals at ECT sensor 2 and the PCM. If the PCM was updated, substitute a known-good PCM (see page 11-7), then recheck. If the PCM was substituted, go to step 1.

NO△If the PCM was updated, troubleshooting is complete. If the PCM was substituted, replace the original PCM (see page 11-238). If any other Temporary DTCs or DTCs are indicated, go to the indicated DTC's troubleshooting.■

DTC P2195: A/F Sensor (Sensor 1) Signal Stuck Lean

NOTE:
- Before you troubleshoot, record all freeze data and any on-board snapshot, and review the general troubleshooting information (see page 11-3).
- If the vehicle was out of fuel and the engine stalled before this DTC was stored, refuel and clear the DTC with the HDS.
- If DTC P2101, P2118, P2135, P2138, P2176, or a combination of P2122 and P2127, P2122 and P2138, or P2127 and P2138 are stored at the same time, troubleshoot them first, then recheck for DTC P2195.

1. Check the installation of the A/F sensor (Sensor 1).

   Is the A/F sensor loose or disconnected in the exhaust pipe?

   YES△Go to step 6.

   NO△Go to step 2.

2. Turn the ignition switch to ON (II).

3. Clear the DTC with the HDS.

4. Start the engine, and let it idle for 2 minutes.

5. Check for Temporary DTCs or DTCs with the HDS.

   Is DTC P2195 indicated?

   YES△Check for poor connections or loose terminals at the A/F sensor (Sensor 1) and the PCM, then go to step 13.

   NO△Intermittent failure, the system is OK at this time. Check for poor connections or loose terminals at the A/F sensor (Sensor 1) and the PCM. If any other Temporary DTCs or DTCs are indicated, go to the indicated DTC's troubleshooting.■

6. Turn the ignition switch to LOCK (0).

7. Reinstall the A/F sensor (Sensor 1) (see page 11-230).

8. Turn the ignition switch to ON (II).

9. Reset the PCM with the HDS.

10. Do the PCM idle learn procedure (see page 11-333).

11. Check for Temporary DTCs or DTCs with the HDS.

    Is DTC P2195 indicated?

    YES△Check for poor connections or loose terminals at the A/F sensor (Sensor 1) and the PCM, then go to step 1.

    NO△Go to step 12.

12. Monitor the OBD STATUS for DTC P2195 in the DTCs MENU with the HDS.

    Does the screen indicate PASSED?

    YES△Troubleshooting is complete. If any other Temporary DTCs or DTCs were indicated in step 11, go to the indicated DTC's troubleshooting.■

    NO△If the screen indicates FAILED, check for poor connections or loose terminals at the A/F sensor (Sensor 1) and the PCM, then go to step 1. If the screen indicated NOT COMPLETED, keep idling until a result comes on.

(cont'd)

DTC Troubleshooting (cont'd)

13. Update the PCM if it does not have the latest software (see page 11-236), or substitute a known-good PCM (see page 11-7).

14. Start the engine, and let it idle for 2 minutes.

15. Check for Temporary DTCs or DTCs with the HDS.

    Is DTC P2195 indicated?

    YES△Check for poor connections or loose terminals at the A/F sensor (Sensor 1) and the PCM. If the PCM was updated, substitute a known-good PCM (see page 11-7), then go to step 14. If the PCM was substituted, go to step 1.

    NO△Go to step 16.

16. Monitor the OBD STATUS for DTC P2195 in the DTCs MENU with the HDS.

    Does the screen indicate PASSED?

    YES△If the PCM was updated, troubleshooting is complete. If the PCM was substituted, replace the original PCM (see page 11-238). If any other Temporary DTCs or DTCs were indicated in step 15, go to the indicated DTC's troubleshooting.■

    NO△If the screen indicates FAILED, check for poor connections or loose terminals at the A/F sensor (Sensor 1) and the PCM. If the PCM was updated, substitute a known-good PCM (see page 11-7), then go to step 14. If the PCM was substituted, go to step 1. If the screen indicates NOT COMPLETED, keep idling until a result comes on.

DTC P2227: BARO Sensor Circuit Range/ Performance Problem

NOTE:
- Before you troubleshoot, record all freeze data and any on-board snapshot, and review the general troubleshooting information (see page 11-3).
- If DTC P0107, P0108, P1128, and/or P1129 are stored at the same time as DTC P2227, troubleshoot those DTCs first, then recheck for DTC P2227.

1. Turn the ignition switch to ON (II), and wait 2 seconds.

2. Check the BARO SENSOR in the DATA LIST with the HDS.

   Is about 101 kPa (29.9 in.Hg, 760 mmHg), or about 2.9 V at sea level indicated?

   YES△Go to step 3

   NO△Go to step 7.

3. Clear the DTC with the HDS.

4. Start the engine. Hold the engine speed at 3,000 rpm without load (in P or N) until the radiator fan comes on, then let it idle.

5. Test-drive under these conditions:

   - Engine coolant temperature (ECT SENSOR 1) above 158 °F (70 °C)
   - Transmission in D
   - REL TP SENSOR between 12 deg and 26 deg for 3 seconds

6. Monitor the OBD STATUS for DTC P2227 in the DTCs MENU with the HDS.

   Does the screen indicate FAILED?

   YES△Go to step 7.

   NO△If the screen indicates PASSED, intermittent failure, the system is OK at this time. If the screen indicates NOT COMPLETED, go to step 4 and recheck.

7. Update the PCM if it does not have the latest software (see page 11-236), or substitute a known-good PCM (see page 11-7).

8. Start the engine. Hold the engine speed at 3,000 rpm without load (in P or N) until the radiator fan comes on, then let it idle.

9. Test-drive under these conditions:

   - Engine coolant temperature (ECT SENSOR 1) above 158 °F (70 °C)
   - Transmission in D
   - REL TP SENSOR between 12 deg and 26 deg for 3 seconds

10. Check for Temporary DTCs or DTCs with the HDS.

    Is DTC P2227 indicated?

    YES△Check for poor connections or loose terminals at the PCM. If the PCM was updated, substitute a known-good PCM (see page 11-7), then go to step 8. If the PCM was substituted, go to step 1.

    NO△Go to step 11.

11. Monitor the OBD STATUS for DTC P2227 in the DTCs MENU with the HDS.

    Does the screen indicate PASSED?

    YES△If the PCM was updated, troubleshooting is complete. If the PCM was substituted, replace the original PCM (see page 11-238). If any other Temporary DTCs or DTCs were indicated in step 10, go to the indicated DTC's troubleshooting.■

    NO△If the screen indicates FAILED, check for poor connections or loose terminals at the PCM. If the PCM was updated, substitute a known-good PCM (see page 11-7), then go to step 8. If the PCM was substituted, go to step 1. If the screen indicates NOT COMPLETED, go to step 8.

DTC P2228: BARO Sensor Circuit Low Voltage

NOTE: Before you troubleshoot, record all freeze data and any on-board snapshot, and review the general troubleshooting information (see page 11-3).

1. Turn the ignition switch to ON (II).

2. Check the BARO SENSOR in the DATA LIST with the HDS.

   Is about 53 kPa (15.6 in.Hg, 397 mmHg), or 1.31 V or less indicated?

   YES△Go to step 3.

   NO△Intermittent failure, the system is OK at this time.■

3. Update the PCM if it does not have the latest software (see page 11-236), or substitute a known-good PCM (see page 11-7).

4. Check for Temporary DTCs or DTCs with the HDS.

   Is DTC P2228 indicated?

   YES△Check for poor connections or loose terminals at the PCM. If the PCM was updated, substitute a known-good PCM (see page 11-7), then recheck. If the PCM was substituted, go to step 1.

   NO△If the PCM was updated, troubleshooting is complete. If the PCM was substituted, replace the original PCM (see page 11-238). If any other Temporary DTCs or DTCs are indicated, go to the indicated DTC's troubleshooting.■

DTC Troubleshooting (cont'd)

DTC P2229: BARO Sensor Circuit High Voltage

NOTE: Before you troubleshoot, record all freeze data and any on-board snapshot, and review the general troubleshooting information (see page 11-3).

1. Turn the ignition switch to ON (II).
2. Check the BARO SENSOR in the DATA LIST with the HDS.

   Is about 160 kPa (47.2 in.Hg, 1,200 mmHg), or 4.49 V or more indicated?

   YES△Go to step 3.

   NO△Intermittent failure, the system is OK at this time.■

3. Update the PCM if it does not have the latest software (see page 11-236), or substitute a known-good PCM (see page 11-7).
4. Check for Temporary DTCs or DTCs with the HDS.

   Is DTC P2229 indicated?

   YES△Check for poor connections or loose terminals at the PCM. If the PCM was updated, substitute a known-good PCM (see page 11-7), then recheck. If the PCM was substituted, go to step 1.

   NO△If the PCM was updated, troubleshooting is complete. If the PCM was substituted, replace the original PCM (see page 11-238). If any other Temporary DTCs or DTCs are indicated, go to the indicated DTC's troubleshooting.■

DTC P2238: A/F Sensor (Sensor 1) AFS+ Circuit Low Voltage

NOTE: Before you troubleshoot, record all freeze data and any on-board snapshot, and review the general troubleshooting information (see page 11-3).

1. Turn the ignition switch to ON (II).
2. Clear the DTC with the HDS.
3. Check for Temporary DTCs or DTCs with the HDS.

   Is DTC P2238 indicated?

   YES△Go to step 4.

   NO△Intermittent failure, the system is OK at this time. Check for poor connections or loose terminals at the A/F sensor (Sensor 1) and the PCM.■

4. Turn the ignition switch to LOCK (0).
5. Jump the SCS line with the HDS.
6. Disconnect the A/F sensor (Sensor 1) 4P connector.
7. Disconnect PCM connector C (44P).
8. Check for continuity between PCM connector terminal C29 and body ground.

PCM CONNECTOR C (44P)

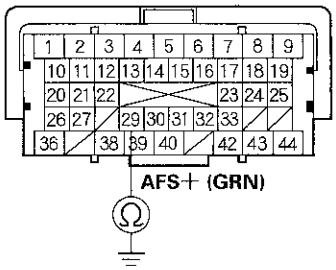

Terminal side of female terminals

Is there continuity?

YES△Repair short in the wire between the PCM (C29) and the A/F sensor (Sensor 1), then go to step 10.

NO△Go to step 9.

9. Replace the A/F sensor (Sensor 1) (see page 11-230).

10. Reconnect all connectors.

11. Turn the ignition switch to ON (II).

12. Reset the PCM with the HDS.

13. Do the PCM idle learn procedure (see page 11-333).

14. Check for Temporary DTCs or DTCs with the HDS.

    Is DTC P2238 indicated?

    YES△Check for poor connections or loose terminals at the A/F sensor (Sensor 1) and the PCM, then go to step 1. If the connections and terminals are OK, go to step 16.

    NO△Go to step 15.

15. Monitor the OBD STATUS for DTC P2238 in the DTCs MENU with the HDS.

    Does the screen indicate PASSED?

    YES△Troubleshooting is complete. If any other Temporary DTCs or DTCs were indicated in step 14, go to the indicated DTC's troubleshooting.■

    NO△If the screen indicates FAILED, check for poor connections or loose terminals at the A/F sensor (Sensor 1) and the PCM, then go to step 1. If the screen indicates NOT COMPLETED, keep idling until a result comes on.

16. Update the PCM if it does not have the latest software (see page 11-236), or substitute a known-good PCM (see page 11-7).

17. Start the engine, and let it idle.

18. Check for Temporary DTCs or DTCs with the HDS.

    Is DTC P2238 indicated?

    YES△If the PCM was updated, substitute a known-good PCM (see page 11-7), then go to step 17. If the PCM was substituted, go to step 1.

    NO△Go to step 19.

19. Monitor the OBD STATUS for DTC P2238 in the DTCs MENU with the HDS.

    Does the screen indicate PASSED?

    YES△If the PCM was updated, troubleshooting is complete. If the PCM was substituted, replace the original PCM (see page 11-238). If any other Temporary DTCs or DTCs were indicated in step 18, go to the indicated DTC's troubleshooting.■

    NO△If the screen indicates FAILED, go to step 1. If the PCM was updated, substitute a known-good PCM (see page 11-7), then go to step 17. If the PCM was substituted, go to step 1. If the screen indicates NOT COMPLETED, keep idling until a result comes on.

DTC Troubleshooting (cont'd)

DTC P2252: A/F Sensor (Sensor 1) AFS— Circuit Low Voltage

NOTE: Before you troubleshoot, record all freeze data and any on-board snapshot, and review the general troubleshooting information (see page 11-3).

1. Turn the ignition switch to ON (II).
2. Clear the DTC with the HDS.
3. Start the engine, and let it idle.
4. Check for Temporary DTCs or DTCs with the HDS.

   Is DTC P2252 indicated?

   YES△Go to step 5.

   NO△Intermittent failure, the system is OK at this time. Check for poor connections or loose terminals at the A/F sensor (Sensor 1) and the PCM. ■

5. Turn the ignition switch to LOCK (0).
6. Jump the SCS line with the HDS.
7. Disconnect the A/F sensor (Sensor 1) 4P connector.
8. Disconnect PCM connector C (44P).
9. Check for continuity between PCM connector terminal C30 and body ground.

PCM CONNECTOR C (44P)

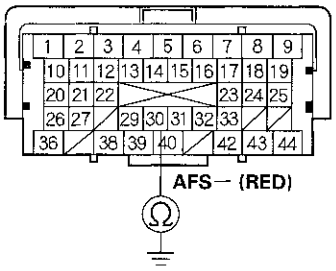

Terminal side of female terminals

   Is there continuity?

   YES△Repair short in the wire between the PCM (C30) and the A/F sensor (Sensor 1), then go to step 11.

   NO△Go to step 10.

10. Replace the A/F sensor (Sensor 1) (see page 11-230).
11. Reconnect all connectors.
12. Turn the ignition switch to ON (II).
13. Reset the PCM with the HDS.

14. Do the PCM idle learn procedure (see page 11-333).

15. Check for Temporary DTCs or DTCs with the HDS.

    Is DTC P2252 indicated?

    YES△Check for poor connections or loose terminals at the A/F sensor (Sensor 1) and the PCM, then go to step 1. If the connections and terminals are OK, go to step 17.

    NO△Go to step 16.

16. Monitor the OBD STATUS for DTC P2252 in the DTCs MENU with the HDS.

    Does the screen indicate PASSED?

    YES△Troubleshooting is complete. If any other Temporary DTCs or DTCs were indicated in step 15, go to the indicated DTC's troubleshooting.■

    NO△If the screen indicates FAILED, check for poor connections or loose terminals at the A/F sensor (Sensor 1) and the PCM, then go to step 1. If the screen indicates NOT COMPLETED, keep idling until a result comes on.

17. Update the PCM if it does not have the latest software (see page 11-236), or substitute a known-good PCM (see page 11-7).

18. Start the engine, and let it idle.

19. Check for Temporary DTCs or DTCs with the HDS.

    Is DTC P2252 indicated?

    YES△If the PCM was updated, substitute a known-good PCM (see page 11-7), then go to step 18. If the PCM was substituted, go to step 1.

    NO△Go to step 20.

20. Monitor the OBD STATUS for DTC P2252 in the DTCs MENU with the HDS.

    Does the screen indicate PASSED?

    YES△If the PCM was updated, troubleshooting is complete. If the PCM was substituted, replace the original PCM (see page 11-238). If any other Temporary DTCs or DTCs were indicated in step 19, go to the indicated DTC's troubleshooting.■

    NO△If the screen indicates FAILED, go to step 1. If the PCM was updated, substitute a known-good PCM (see page 11-7), then go to step 18. If the PCM was substituted, go to step 1. If the screen indicates NOT COMPLETED, keep idling until a result comes on.

DTC Troubleshooting (cont'd)

DTC P2270: Secondary HO2S (Sensor 2) Circuit Signal Stuck Lean

DTC P2271: Secondary HO2S (Sensor 2) Circuit Signal Stuck Rich

NOTE: Before you troubleshoot, record all freeze data and any on-board snapshot, and review the general troubleshooting information (see page 11-3).

1. Turn the ignition switch to ON (II).
2. Clear the DTC with the HDS.
3. Start the engine. Hold the engine speed at 3,000 rpm without load (in P or N) until the radiator fan comes on, then let it idle.
4. Test-drive under these conditions:
   - Engine coolant temperature (ECT SENSOR 1) above 158 °F (70 °C)
   - Vehicle speed between 35—55 mph (56—88 km/h)
   - Drive 1 minute or more
5. Monitor the OBD STATUS for DTC P2270 or P2271 in the DTCs MENU with the HDS.

   Does the screen indicate FAILED?

   YES△Go to step 6.

   NO△If the screen indicates PASSED, intermittent failure, the system is OK at this time. Check for poor connections or loose terminals at the secondary HO2S (Sensor 2) and the PCM. If the screen indicates EXECUTING, keep driving until a result comes on. If the screen indicates OUT OF CONDITION, go to step 3 and recheck.
6. Turn the ignition switch to LOCK (0).
7. Replace the secondary HO2S (Sensor 2) (see page 11-230).
8. Turn the ignition switch to ON (II).
9. Reset the PCM with the HDS.
10. Do the PCM idle learn procedure (see page 11-333).
11. Start the engine. Hold the engine speed at 3,000 rpm without load (in P or N) until the radiator fan comes on, then let it idle.
12. Test-drive under these conditions:
    - Engine coolant temperature (ECT SENSOR 1) above 158 °F (70 °C)
    - Vehicle speed between 35—55 mph (56—88 km/h)
    - Drive 1 minute or more
13. Check for Temporary DTCs or DTCs with the HDS.

    Is DTC P2270 or P2271 indicated?

    YES△Check for poor connections or loose terminals at the secondary HO2S (Sensor 2) and the PCM, then go to step 1.

    NO△Go to step 14.
14. Monitor the OBD STATUS for DTC P2270 or P2271 in the DTCs MENU with the HDS.

    Does the screen indicate PASSED?

    YES△Troubleshooting is complete. If any other Temporary DTCs or DTCs were indicated in step 13, go to the indicated DTC's troubleshooting. ■

    NO△If the screen indicates FAILED, check for poor connections or loose terminals at the secondary HO2S (Sensor 2) and the PCM, then go to step 1. If the screen indicates EXECUTING, keep driving until a result comes on. If the screen indicates OUT OF CONDITION, go to step 11.

DTC P2610: PCM Ignition Off Internal Timer Malfunction

NOTE: Before you troubleshoot, record all freeze data and any on-board snapshot, and review the general troubleshooting information (see page 11-3).

1. Turn the ignition switch to ON (II).

2. Clear the DTC with the HDS.

3. Check for Temporary DTCs or DTCs with the HDS.

   Is DTC P2610 indicated?

   YES△Go to step 4.

   NO△Intermittent failure, the system is OK at this time. If any other Temporary DTCs or DTCs are indicated, go to the indicated DTC's troubleshooting.■

4. Update the PCM if it does not have the latest software (see page 11-236), or substitute a known-good PCM (see page 11-7).

5. Check for Temporary DTCs or DTCs with the HDS.

   Is DTC P2610 indicated?

   YES△If the PCM was updated, substitute a known-good PCM (see page 11-7), then recheck. If the PCM was substituted, go to step 1.

   NO△If the PCM was updated, troubleshooting is complete. If the PCM was substituted, replace the original PCM (see page 11-238). If any other Temporary DTCs or DTCs are indicated, go to the indicated DTC's troubleshooting.■

DTC P2A00: A/F Sensor (Sensor 1) Circuit Range/Performance Problem

NOTE: Before you troubleshoot, record all freeze data and any on-board snapshot, and review the general troubleshooting information (see page 11-3).

1. Turn the ignition switch to ON (II).

2. Clear the DTC with the HDS.

3. Start the engine. Hold the engine speed at 3,000 rpm without load (in P or N) until the radiator fan comes on, then let it idle.

4. Test-drive under these conditions:

   - Engine coolant temperature (ECT SENSOR 1) above 158 °F (70 °C)
   - Transmission in D
   - Vehicle speed between 25—55 mph (40—88 km/h) for 5 minutes
   - Drive at a steady speed between 55—75 mph (88—120 km/h) for 10 seconds, then decelerate (with throttle fully closed) for 6 seconds or more

5. Monitor the OBD STATUS for DTC P2A00 in the DTCs MENU with the HDS.

   Does the screen indicate FAILED?

   YES△Go to step 6.

   NO△If the screen indicates PASSED, intermittent failure, the system is OK at this time. Check for poor connections or loose terminals at the A/F sensor (Sensor 1) and the PCM. If the screen indicates EXECUTING, keep driving until a result comes on. If the screen indicates OUT OF CONDITION, go to step 3 and recheck.

6. Turn the ignition switch to LOCK (0).

7. Replace the A/F sensor (Sensor 1) (see page 11-230).

8. Turn the ignition switch to ON (II).

9. Reset the PCM with the HDS.

(cont'd)

DTC Troubleshooting (cont'd)

10. Do the PCM idle learn procedure (see page 11-333).

11. Test-drive under these conditions:

    - Engine coolant temperature (ECT SENSOR 1) above 158 °F (70 °C)
    - Transmission in D
    - Vehicle speed between 25—55 mph (40—88 km/h) for 5 minutes
    - Drive at a steady speed between 55—75 mph (88—120 km/h) for 10 seconds, then decelerate (with throttle fully closed) for 6 seconds or more

12. Check for Temporary DTCs or DTCs with the HDS.

    Is DTC P2A00 indicated?

    YES△Check for poor connections or loose terminals at the A/F sensor (Sensor 1) and the PCM, then go to step 1.

    NO△Go to step 13.

13. Monitor the OBD STATUS for DTC P2A00 in the DTCs MENU with the HDS.

    Does the screen indicate PASSED?

    YES△Troubleshooting is complete. If any other Temporary DTCs or DTCs were indicated in step 12, go to the indicated DTC's troubleshooting.■

    NO△If the screen indicates FAILED, check for poor connections or loose terminals at the A/F sensor (Sensor 1) and the PCM, then go to step 1. If the screen indicates EXECUTING, keep driving until a result comes on. If the screen indicates OUT OF CONDITION, go to step 11.

DTC U0028: F-CAN Malfunction (BUS-OFF)

NOTE: Before you troubleshoot, record all freeze data and any on-board snapshot, and review the general troubleshooting information (see page 11-3).

1. Turn the ignition switch to ON (II).

2. Clear the DTC with the HDS.

3. Check for Temporary DTCs or DTCs with the HDS.

   Is DTC U0028 indicated?

   YES△Go to step 4.

   NO△Intermittent failure, the system is OK at this time. If any other Temporary DTCs or DTCs are indicated, go to the indicated DTC's troubleshooting.■

4. Update the PCM if it does not have the latest software (see page 11-236), or substitute a known-good PCM (see page 11-7).

5. Check for Temporary DTCs or DTCs with the HDS.

   Is DTC U0028 indicated?

   YES△If the PCM was updated, substitute a known-good PCM (see page 11-7), then recheck. If the PCM was substituted, go to step 1.

   NO△If the PCM was updated, troubleshooting is complete. If the PCM was substituted, replace the original PCM (see page 11-238). If any other Temporary DTCs or DTCs are indicated, go to the indicated DTC's troubleshooting.■

DTC U0037: IMA-CAN Malfunction (BUS-OFF)

NOTE: Before you troubleshoot, record all freeze data and any on-board snapshot, and review the general troubleshooting information (see page 11-3).

1. Turn the ignition switch to ON (II).
2. Clear the DTC with the HDS.
3. Check for Temporary DTCs or DTCs with the HDS.

   Is DTC U0037 indicated?

   YES△Go to step 4.

   NO△Intermittent failure, the system is OK at this time. Check for poor connections or loose terminals at the MCM, the BCM module, the A/C compressor driver, and the PCM.■

4. Check for DTCs in the IMA system with the HDS.

   Is DTC U0037 indicated?

   YES△Go to step 5.

   NO△Go to step 16.

5. Turn the ignition switch to LOCK (0).
6. Jump the SCS line with the HDS.
7. Disconnect PCM connector A (44P).
8. Remove the rear seat (see page 20-118).
9. Turn the battery module switch OFF.
10. Remove the IPU lid (see page 12-180).
11. Disconnect BCM module connector A (40P) (see page 12-182).
12. Connect PCM connector terminal A38 to body ground with a jumper wire.

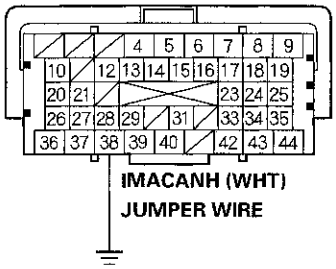

Terminal side of female terminals

13. Check for continuity between BCM module connector terminal A20 to body ground.

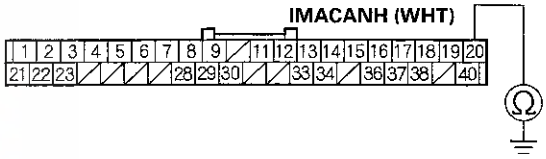

Wire side of female terminals

Is there continuity?

YES△Go to step 14.

NO△Repair open in the wire between the PCM (A38) and the BCM module (A20), then go to step 41.

(cont'd)

DTC Troubleshooting (cont'd)

14. Connect PCM connector terminal A39 to body ground with a jumper wire.

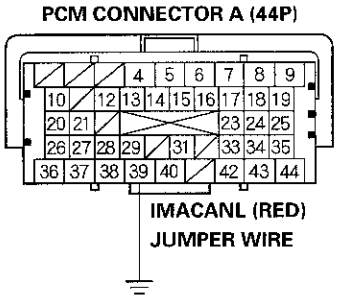

Terminal side of female terminals

15. Check for continuity between BCM module connector terminal A40 to body ground.

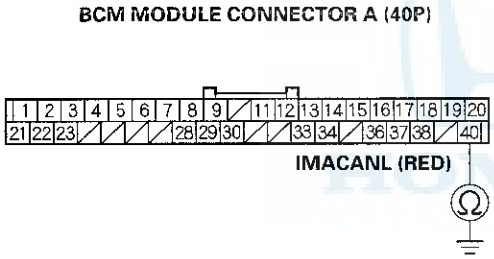

Wire side of female terminals

Is there continuity?

YES△Go to step 47.

NO△Repair open in the wire between the PCM (A39) and the BCM module (A40), then go to step 41.

16. Turn the ignition switch to LOCK (0).

17. Remove the rear seat (see page 20-118).

18. Turn the battery module switch OFF.

19. Remove the IPU lid (see page 12-180).

20. Measure the resistance between BCM module connector terminals A20 and A40 with connector connected.

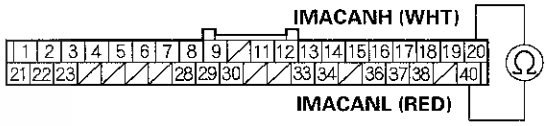

Wire side of female terminals

Is there about 50.4 – 61.6 Ω ?

YES△Go to step 22.

NO△Go to step 21.

21. Check the value of the resistance again.

Is there about 1 Ω or less?

YES△Repair short in the wires between the PCM (A38: IMACANH line) and (A39: IMACANL line), then go to step 41.

NO△Go to step 29.

22. Jump the SCS line with the HDS.

23. Disconnect PCM connector A (44P).

24. Remove the BCM module (see page 12-182).

25. Disconnect the MCM 20P connector (see page 12-186).

26. Disconnect the A/C compressor driver 4P connector (see page 21-109).

27. Check for continuity between BCM module connector terminal A20 to body ground.

BCM MODULE CONNECTOR A (40P)

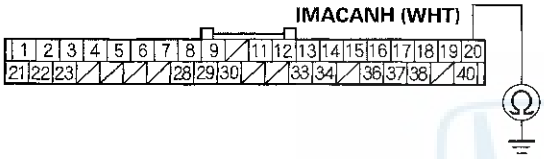

Wire side of female terminals

Is there continuity?

YES△Repair short in the wire between the PCM (A38) and the BCM module (A20), then go to step 41.

NO△Go to step 28.

28. Check for continuity between BCM module connector terminal A40 and body ground.

BCM MODULE CONNECTOR A (40P)

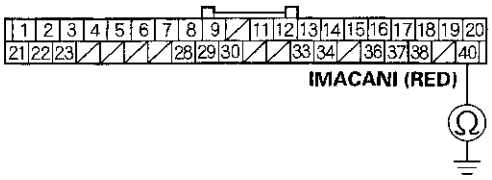

Wire side of female terminals

Is there continuity?

YES△Repair short in the wire between the PCM (A39) and the BCM module (A40), then go to step 41.

NO△Go to step 47.

29. Jump the SCS line with the HDS.

30. Disconnect PCM connector A (44P).

31. Remove the BCM module (see page 12-182).

32. Disconnect the MCM 20P connector (see page 12-186).

33. Disconnect the A/C compressor driver 4P connector (see page 21-109).

(cont'd)

DTC Troubleshooting (cont'd)

34. Connect the BCM module connector A (40P), then measure the resistance between BCM module connector terminals A20 and A40 with connector connected.

BCM MODULE CONNECTOR A (40P)

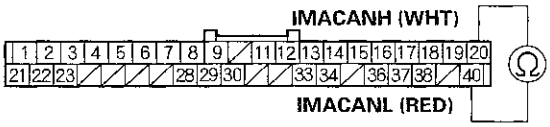

Wire side of female terminals

Is there about 108– 132 Ω ?

YES△Go to step 35.

NO△Substitute a known-good BCM module (see page 12-8), then go to step 41 and recheck. If DTC U0037 is not indicated, replace the original BCM module (see page 12-182), then go to step 41.

35. Disconnect BCM module connector A (40P) (see page 12-182).

36. Reconnect the MCM 20P connector.

37. Measure the resistance between BCM module connector terminals A20 and A40.

BCM MODULE CONNECTOR A (40P)

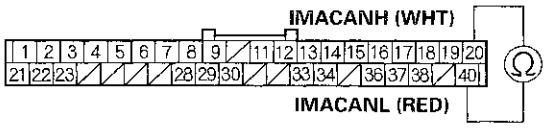

Wire side of female terminals

Is there about 2.34– 2.86 kΩ ?

YES△Go to step 38.

NO△Substitute a known-good the MCM (see page 12-8), then go to step 41 and recheck. If DTC U0037 is not indicated, replace the original MCM (see page 12-186), then go to step 41.

38. Disconnect the MCM 20P connector.

39. Reconnect the A/C compressor driver 4P connector.

40. Measure the resistance between BCM module connector terminals A20 and A40.

BCM MODULE CONNECTOR A (40P)

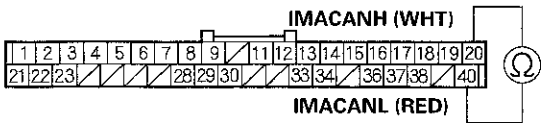

Wire side of female terminals

Is there about 2.34—2.86 kΩ ?

YES△Go to step 47.

NO△Substitute a known-good the A/C compressor driver (see page 21-109), then go to step 41 and recheck. If DTC U0037 is not indicated, replace the original A/C compressor driver (see page 21-109), then go to step 41.

41. Reconnect all connectors.

42. Reinstall the IPU lid (see page 12-180), then turn the battery module switch ON (see page 12-4).

43. Turn the ignition switch to ON (II).

44. Reset the PCM with the HDS.

45. Do the PCM idle learn procedure (see page 11-333).

46. Check for Temporary DTCs or DTCs with the HDS.

Is DTC U0037 indicated?

YES△Check for poor connections or loose terminals at the MCM, the BCM module, the A/C compressor driver, and the PCM, then go to step 1.

NO△Troubleshooting is complete. If any other Temporary DTCs or DTCs are indicated, go to the indicated DTC's troubleshooting.■

47. Reconnect all connectors.

48. Reinstall the IPU lid (see page 12-180), then turn the battery module switch ON (see page 12-4).

49. Update the PCM if it does not have the latest software (see page 11-236), or substitute a known-good PCM (see page 11-7).

50. Check for Temporary DTCs or DTCs with the HDS.

Is DTC U0037 indicated?

YES△Check for poor connections or loose terminals at the MCM, the BCM module, the A/C compressor driver, and the PCM. If the PCM was updated, substitute a known-good PCM (see page 11-7), then recheck. If the PCM was substituted, go to step 1.

NO△If the PCM was updated, troubleshooting is complete. If the PCM was substituted, replace the original PCM (see page 11-238). If any other Temporary DTCs or DTCs are indicated, go to the indicated DTC's troubleshooting.■

DTC Troubleshooting (cont'd)

DTC U0110: F-CAN Malfunction (PCM-MCM)

NOTE:
- Before you troubleshoot, record all freeze data and any on-board snapshot, and review the general troubleshooting information (see page 11-3).
- Information marked with an asterisk (*) applies to the '06-07 models.

1. Turn the ignition switch to ON (II).
2. Clear the DTC with the HDS.
3. Check for Temporary DTCs or DTCs with the HDS.

   Are DTC U0028 and U0110 indicated at the same time?

   YES△Go to troubleshooting for DTC U0028.■

   NO△Go to step 4.
4. Clear the DTC with the HDS.
5. Check for Temporary DTCs or DTCs with the HDS.

   Is DTC U0110 indicated?

   YES△Go to step 6.

   NO△Intermittent failure, the system is OK at this time. Check for poor connections or loose terminals at the MCM, the BCM module, and the PCM.■
6. Check for Temporary DTCs or DTCs with the HDS again.

   Are DTC U0110 and U1205 indicated at the same time?

   YES△Go to step 7.

   NO△Go to step 16.
7. Turn the ignition switch to LOCK (0).
8. Remove the rear seat (see page 20-118).
9. Turn the battery module switch OFF.
10. Remove the IPU lid (see page 12-180).
11. Remove the BCM module (see page 12-182).
12. Check for poor connections at the MCM 20P connector.

    Are the connections OK?

    YES△Go to step 13.

    NO△Repair the poor connections at the MCM 20P connector, then go to step 33.
13. Disconnect the MCM 20P connector (see page 12-186).
14. Reconnect the BCM module connector A (40P), then turn the ignition switch ON (II), and measure the voltage between MCM 20P connector terminal No. 18 and body ground within 1 second.

MCM 20P CONNECTOR

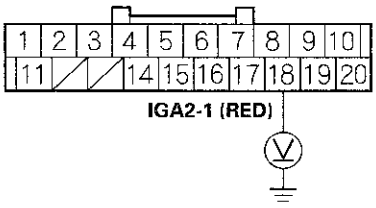

Wire side of female terminals

Is there battery voltage?

YES△Go to step 15.

NO△Go to step 24.

15. Check for continuity between body ground and MCM 20P connector terminals No. 2 and No. 9* individually.

MCM 20P CONNECTOR

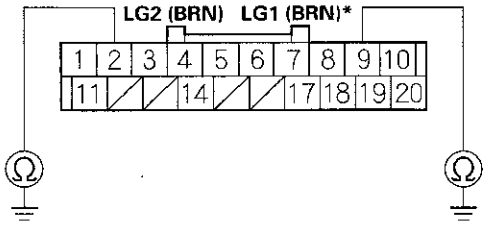

Wire side of female terminals

Is there continuity?

YES△Update the MCM if it does not have the latest software (see page 12-185), or substitute a known-good MCM (see page 12-8), then go to step 33 and recheck. If DTC U0110 is not indicated with a known-good MCM, replace the original MCM (see page 12-186), then go to step 33.

NO△Repair open in the wire between the MCM (No. 2 and/or No. 9) and G102 (see page 22-16), then go to step 33.

16. Turn the ignition switch to LOCK (0).

17. Remove the rear seat (see page 20-118).

18. Turn the battery module switch OFF.

19. Remove the IPU lid (see page 12-180).

20. Remove the BCM module connector A (40P) (see page 12-182).

21. Disconnect the MCM 20P connector (see page 12-186).

22. Check for continuity between BCM module connector terminal A1 and MCM 20P connector terminal No. 20.

BCM MODULE CONNECTOR A (40P)

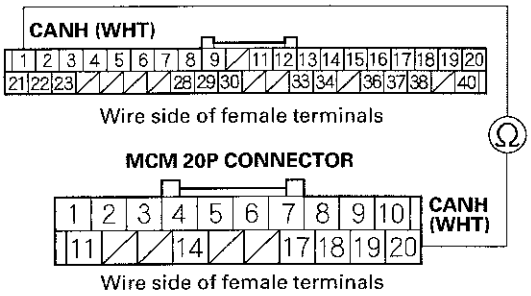

Is there continuity?

YES△Go to step 23.

NO△Repair open in the wire between the BCM module (A1) and the MCM (No. 20), then go to step 33.

(cont'd)

DTC Troubleshooting (cont'd)

23. Check for continuity between BCM module connector terminal A21 and MCM 20P connector terminal No. 10.

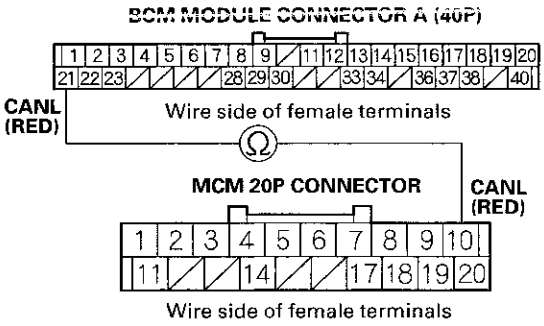

Is there continuity?

YES△Update the MCM if it does not have the latest software (see page 12-185), or substitute a known-good MCM (see page 12-8), then go to step 33 and recheck. If DTC U0110 is not indicated with a known-good MCM, replace the original MCM (see page 12-186), then go to step 33.

NO△Repair open in the wire between the BCM module (A21) and the MCM (No. 10), then go to step 33.

24. Turn the ignition switch to LOCK (0).

25. Remove MCM relay 2, and test it (see page 22-64).

Is MCM relay 2 OK?

YES△Go to step 26.

NO△Replace MCM relay 2, then go to step 33.

26. Check the +B IMA2 (10 A) fuse in the auxiliary under-hood fuse/relay box.

Is the fuse OK?

YES△Go to step 27.

NO△
- Repair short in the wire between the +B IMA2 (10 A) fuse and MCM relay 2. Also replace the +B IMA2 (10 A) fuse, then go to step 33.
- Repair short in the wire between the MCM relay 2 and the MCM, the IPU module fan. Also replace the +B IMA2 (10 A) fuse, then go to step 33.

27. Measure the voltage between MCM relay 2 4P connector terminal No. 2 and body ground.

MCM RELAY 2 4P CONNECTOR

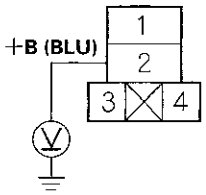

Wire side of female terminals

Is there battery voltage?

YES△Go to step 28.

NO△Repair open in the wire between the +B IMA2 (10 A) fuse and MCM relay 2, then go to step 33.

28. Check for continuity between MCM relay 2 4P connector terminal No. 1 and MCM 20P connector terminal No. 18.

MCM RELAY 2 4P CONNECTOR

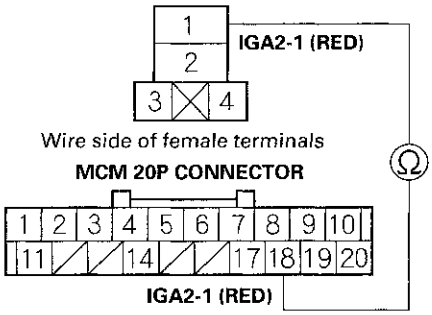

Wire side of female terminals

Is there continuity?

YES△Go to step 29.

NO△Repair open in the wire between the MCM (No. 18) and MCM relay 2, then go to step 33.

(cont'd)

DTC Troubleshooting (cont'd)

29. Disconnect BCM module connector A (40P) (see page 12-182).

30. Check for continuity between MCM relay 2 4P connector terminal No. 3 and BCM module connector terminal A12.

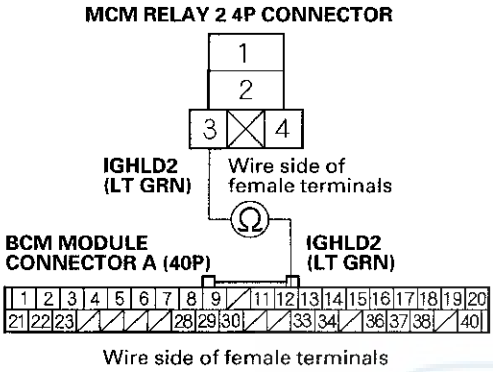

Is there continuity?

YES△Go to step 31.

NO△Repair open in the wire between the BCM module (A12) and MCM relay 2, then go to step 33.

31. Remove MCM relay 1.

32. Check for continuity between MCM relay 1 4P connector terminal No. 1 and MCM relay 2 4P connector terminal No. 4.

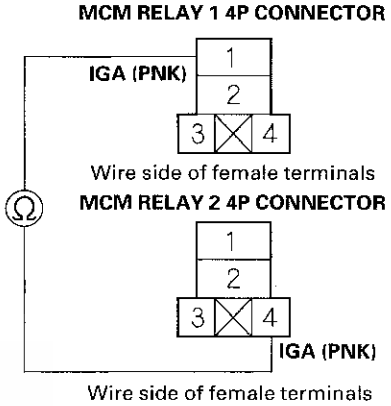

Is there continuity?

YES△Update the BCM module if it does not have the latest software (see page 12-181), or substitute a known-good BCM module (see page 12-8), then go to step 33 and recheck. If DTC U0110 is not indicated with a known-good BCM module, replace the original BCM module (see page 12-182), then go to step 33.

NO△Repair open in the wire between MCM relay 1 and MCM relay 2, then go to step 33.

33. Turn the ignition switch to LOCK (0).

34. Reconnect all connectors.

35. Reinstall the IPU lid (see page 12-180), then turn the battery module switch ON (see page 12-4).

36. Turn the ignition switch to ON (II).

37. Reset the PCM with the HDS.

38. Do the PCM idle learn procedure (see page 11-333).

39. Check for Temporary DTCs or DTCs with the HDS.

    Is DTC U0110 indicated?

    YES△Check for poor connections or loose terminals at the MCM, the BCM module, and the PCM, then go to step 1.

    NO△Troubleshooting is complete. If any other Temporary DTCs or DTCs are indicated, go to the indicated DTC's troubleshooting.■

DTC U0111: F-CAN Malfunction (PCM-BCM module)

NOTE: Before you troubleshoot, record all freeze data and any on-board snapshot, and review the general troubleshooting information (see page 11-3).

1. Turn the ignition switch to ON (II).

2. Clear the DTC with the HDS.

3. Check for Temporary DTCs or DTCs with the HDS.

   Are DTC U0028 and U0111 indicated at the same time?

   YES△Go to troubleshooting for DTC U0028.■

   NO△Go to step 4.

4. Clear the DTC with the HDS.

5. Check for Temporary DTCs or DTCs with the HDS.

   Is DTC U0111 indicated?

   YES△Go to step 6.

   NO△Intermittent failure, the system is OK at this time. Check for poor connections or loose terminals at the MCM, the BCM module, and the PCM.■

6. Turn the ignition switch to LOCK (0).

7. Remove the rear seat (see page 20-118).

8. Turn the battery module switch OFF.

9. Remove the IPU lid (see page 12-180).

(cont'd)

DTC Troubleshooting (cont'd)

10. Remove BCM module connector A (40P) (see page 12-182).

11. Disconnect the MCM 20P connector (see page 12-186).

12. Check for continuity between BCM module connector terminal A1 and MCM 20P connector terminal No. 20.

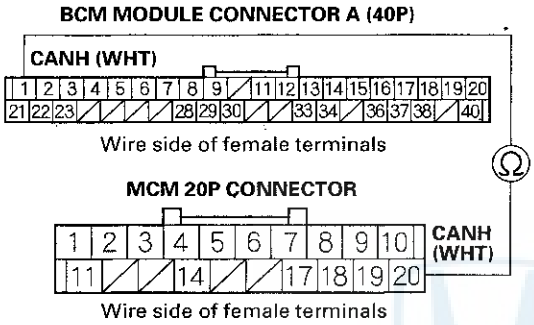

Is there continuity?

YES△Go to step 13.

NO△Repair open in the wire between the BCM module (A1) and the MCM (No. 20), then go to step 14.

13. Check for continuity between BCM module connector terminal A21 and MCM 20P connector terminal No. 10.

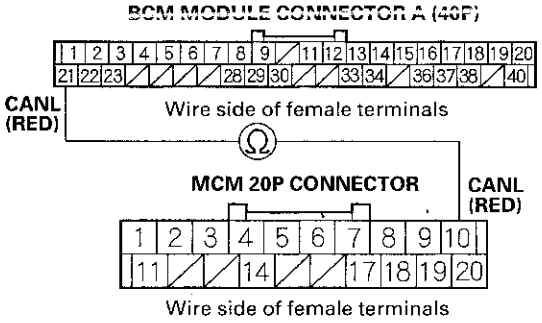

Is there continuity?

YES△Update the BCM module if it does not have the latest software (see page 12-181), or substitute a known-good BCM module (see page 12-8), then go to step 14 and recheck. If DTC U0111 is not indicated with a known-good BCM module, replace the original BCM module (see page 12-182), then go to step 14.

NO△Repair open in the wire between the BCM module (A21) and the MCM (No. 10), then go to step 14.

14. Turn the ignition switch to LOCK (0).

15. Reconnect all connectors.

16. Reinstall the IPU lid (see page 12-180), then turn the battery module switch ON (see page 12-4).

17. Turn the ignition switch to ON (II).

18. Reset the PCM with the HDS.

19. Do the PCM idle learn procedure (see page 11-333).

20. Check for Temporary DTCs or DTCs with the HDS.

    Is DTC U0111 indicated?

    YES△Check for poor connections or loose terminals at the MCM, the BCM module, and the PCM, then go to step 1.

    NO△Troubleshooting is complete. If any other Temporary DTCs or DTCs are indicated, go to the indicated DTC's troubleshooting.■

DTC U0121: F-CAN Malfunction (PCM-ABS Modulator-Control Unit)

NOTE: Before you troubleshoot, record all freeze data and any on-board snapshot, and review the general troubleshooting information (see page 11-3).

1. Turn the ignition switch to ON (II).

2. Check for Temporary DTCs or DTCs with the HDS.

   Are DTC U0028 and U0121 indicated at the same time?

   YES△Go to troubleshooting for DTC U0028.■

   NO△Go to step 3.

3. Clear the DTC with the HDS.

4. Check for Temporary DTCs or DTCs with the HDS.

   Is DTC U0121 indicated?

   YES△Go to step 5.

   NO△Intermittent failure, the system is OK at this time. Check for poor connections or loose terminals at the ABS modulator-control unit, and the PCM.■

5. Check for communication to the ABS with the HDS.

   Does the HDS communicate with the ABS modulator-control unit?

   YES△Go to step 6.

   NO△Go to the DLC circuit troubleshooting (see page 11-213).■

6. Turn the ignition switch to LOCK (0).

7. Jump the SCS line with the HDS.

8. Disconnect the ABS modulator-control unit 25P connector.

(cont'd)

DTC Troubleshooting (cont'd)

9. Disconnect PCM connector A (44P)

10. Check for continuity between PCM connector terminal A36 and ABS modulator-control unit 25P connector terminal No. 1.

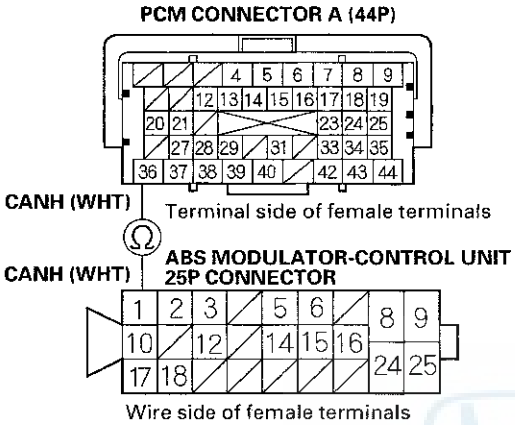

Is there continuity?

YES△Go to step 11.

NO△Repair open in the wire between the PCM (A36) and the ABS modulator-control unit, then go to step 12.

11. Check for continuity between PCM connector terminal A37 and ABS modulator-control unit 25P connector terminal No. 17.

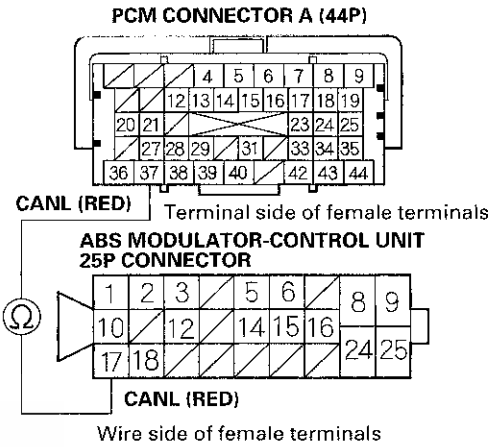

Is there continuity?

YES△Substitute a known-good ABS modulator-control unit (see page 19-154), then go to step 12 and recheck. If DTC U0121 is not indicated, replace the original ABS modulator-control unit (see page 19-154), then go to step 12.

NO△Repair open in the wire between the PCM (A37) and the ABS modulator-control unit, then go to step 12.

12. Reconnect all connectors.

13. Turn the ignition switch to ON (II).

14. Reset the PCM with the HDS.

15. Do the PCM idle learn procedure (see page 11-333).

16. Check for Temporary DTCs or DTCs with the HDS.

    Is DTC U0121 indicated?

    YES△If DTC U0121 indicated, check for poor connections or loose terminals at the ABS modulator-control unit and the PCM, then go to step 1.

    NO△Troubleshooting is complete. If any other Temporary DTCs or DTCs are indicated, go to the indicated DTC's troubleshooting.■

DTC U0122: F-CAN Malfunction (PCM-VSA Modulator-Control Unit)

NOTE: Before you troubleshoot, record all freeze data and any on-board snapshot, and review the general troubleshooting information (see page 11-3).

1. Turn the ignition switch to ON (II).

2. Check for Temporary DTCs or DTCs with the HDS.

    Are DTC U0028 and U0122 indicated at the same time?

    YES△Go to troubleshooting for DTC U0028.■

    NO△Go to step 3.

3. Clear the DTC with the HDS.

4. Check for Temporary DTCs or DTCs with the HDS.

    Is DTC U0122 indicated?

    YES△Go to step 5.

    NO△Intermittent failure, the system is OK at this time. Check for poor connections or loose terminals at the VSA modulator-control unit and the PCM.■

5. Check for communication to the VSA system with the HDS.

    Does the HDS communicate with the VSA modulator-control unit?

    YES△Go to step 6.

    NO△Go to the DLC circuit troubleshooting (see page 11-213).■

6. Turn the ignition switch to LOCK (0).

7. Jump the SCS line with the HDS.

8. Disconnect the VSA modulator-control unit 37P connector.

9. Disconnect PCM connector A (44P).

(cont'd)

DTC Troubleshooting (cont'd)

10. Check for continuity between PCM connector terminal A36 and VSA modulator-control unit 37P connector terminal No. 15.

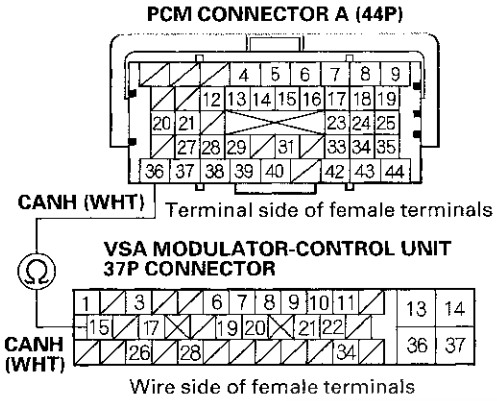

Is there continuity?

YES△Go to step 11.

NO△Repair open in the wire between the PCM (A36) and the VSA modulator-control unit, then go to step 12.

11. Check for continuity between PCM connector terminal A37 and VSA modulator-control unit 37P connector terminal No. 1.

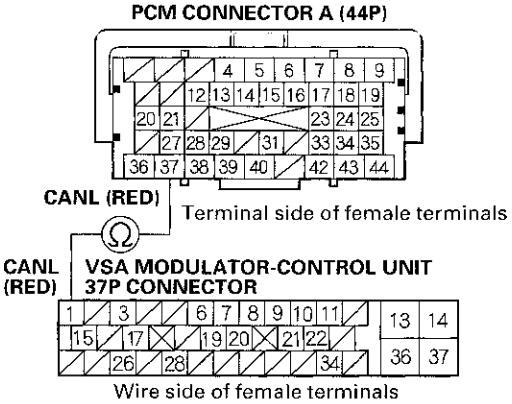

Is there continuity?

YES△Substitute a known-good VSA modulator-control unit (see page 19-236), then go to step 12 and recheck. If DTC U0122 is not indicated, replace the original VSA modulator-control unit (see page 19-236), then go to step 12.

NO△Repair open in the wire between the PCM (A37) and the VSA modulator-control unit, then go to step 12.

12. Reconnect all connectors.

13. Turn the ignition switch to ON (II).

14. Reset the PCM with the HDS.

15. Do the PCM idle learn procedure (see page 11-333).

16. Check for Temporary DTCs or DTCs with the HDS.

    Is DTC U0122 indicated?

    YES△If DTC U0122 indicated, check for poor connections or loose terminals at the VSA modulator-control unit and the PCM, then go to step 1.

    NO△Troubleshooting is complete. If any other Temporary DTCs or DTCs are indicated, go to the indicated DTC's troubleshooting.■

DTC U0129: F-CAN Malfunction (PCM-Servo Unit)

NOTE: Before you troubleshoot, record all freeze data and any on-board snapshot, and review the general troubleshooting information (see page 11-3).

1. Turn the ignition switch to ON (II).

2. Clear the DTC with the HDS.

3. Check for Temporary DTCs or DTCs with the HDS.

   Are DTC U0028 and U0129 indicated at the same time?

   YES△Go to troubleshooting for DTC U0028.■

   NO△Go to step 4.

4. Clear the DTC with the HDS.

5. Check for Temporary DTCs or DTCs with the HDS.

   Is DTC U0129 indicated?

   YES△Go to step 6.

   NO△Intermittent failure, the system is OK at this time. Check for poor connections or loose terminals at the servo unit and the PCM.■

6. Check for communication to the advanced hydraulic booster system with the HDS.

   Does the HDS communicate with the servo unit?

   YES△Check for DTCs in the hydraulic booster system with the HDS, then go to the indicated DTCs troubleshooting.■

   NO△Go to step 7.

(cont'd)

DTC Troubleshooting (cont'd)

7. Turn the ignition switch to LOCK (0).

8. Disconnect the servo unit 25P connector.

9. Check for continuity between body ground and servo unit 25P connector terminals No. 7, No. 23, and No. 24 individually.

SERVO UNIT 25P CONNECTOR

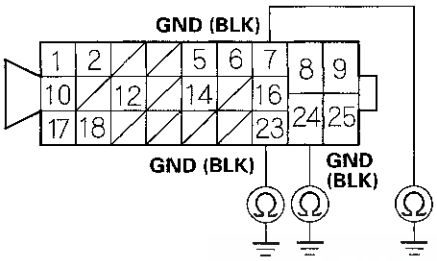

Wire side of female terminals

Is there continuity?

YES△Substitute a known-good servo unit (see page 19-100), then go to step 10 and recheck. If DTC U0129 is not indicated, replace the original servo unit, then go to step 10.

NO△Repair open in the wire between the servo unit (No. 7, No. 23, and/or No. 24) and G202 (see page 22-22), then go to step 10.

10. Turn the ignition switch to LOCK (0).

11. Reconnect the servo unit 25P connector.

12. Turn the ignition switch to ON (II).

13. Reset the PCM with the HDS.

14. Do the PCM idle learn procedure (see page 11-333).

15. Check for Temporary DTCs or DTCs with the HDS.

Is DTC U0129 indicated?

YES△Check for poor connections or loose terminals at the servo unit and the PCM, then go to step 1.

NO△Troubleshooting is complete. If any other Temporary DTCs or DTCs are indicated, go to the indicated DTC's troubleshooting.■

DTC U0155: F-CAN Malfunction (PCM-Gauge Control Module)

NOTE: Before you troubleshoot, record all freeze data and any on-board snapshot, and review the general troubleshooting information (see page 11-3).

1. Turn the ignition switch to ON (II).
2. Clear the DTC with the HDS.
3. Check for Temporary DTCs or DTCs with the HDS.

   Is DTC U0155 indicated?

   YES△Go to step 4.

   NO△Intermittent failure, the system is OK at this time. Check for poor connections or loose terminals at the gauge control module (tach) and the PCM.■

4. Check for body electrical DTCs in the DTCs MENU with the HDS.

   Is DTC B1168, B1169, and/or B1178 indicated?

   YES△Go to step 5.

   NO△Do the gauge control module input test (see page 22-248).■

5. Turn the ignition switch to LOCK (0).
6. Jump the SCS line with the HDS.
7. Remove the gauge control module (tach) (see page 22-248).
8. Disconnect the gauge control module (tach) 36P connector.
9. Disconnect PCM connector A (44P).
10. Connect gauge control module (tach) 36P connector terminal No. 1 to body ground with a jumper wire.

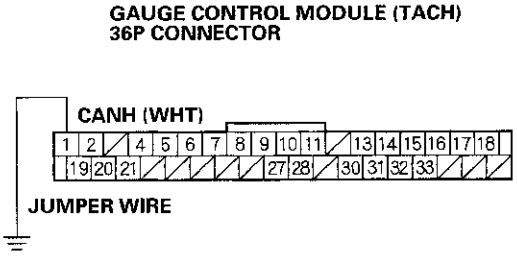

Wire side of female terminals

11. Check for continuity between PCM connector terminal A36 and body ground.

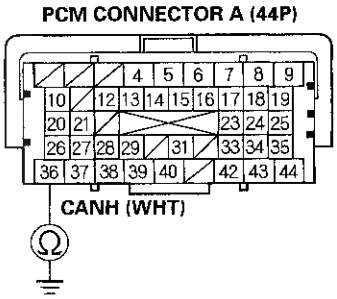

Terminal side of female terminals

Is there continuity?

YES△Go to step 12.

NO△Repair open in the wire between the PCM (A36) and the gauge control module (tach), then go to step 14.

(cont'd)

DTC Troubleshooting (cont'd)

12. Connect gauge control module (tach) 36P connector terminal No. 19 to body ground with a jumper wire.

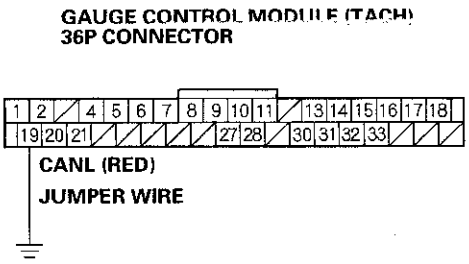

Wire side of female terminals

13. Check for continuity between PCM connector terminal A37 and body ground.

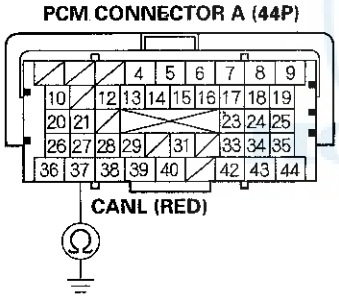

Terminal side of female terminals

Is there continuity?

YES△Substitute a known-good gauge control module (tach) (see page 22-255), then go to step 14 and recheck. If DTC U0155 is not indicated, replace the original gauge control module (tach), then go to step 14.

NO△Repair open in the wire between the PCM (A37) and the gauge control module (tach), then go to step 14.

14. Reconnect all connectors.

15. Turn the ignition switch to ON (II).

16. Reset the PCM with the HDS.

17. Do the PCM idle learn procedure (see page 11-333).

18. Check for Temporary DTCs or DTCs with the HDS.

Is DTC U0155 indicated?

YES△Check for poor connections or loose terminals at the gauge control module (tach) and the PCM, then go to step 1.

NO△Troubleshooting is complete. If any other Temporary DTCs or DTCs are indicated, go to the indicated DTC's troubleshooting. ■

DTC U1205: IMA-CAN Malfunction (PCM-MCM)

NOTE:
- Before you troubleshoot, record all freeze data and any on-board snapshot, and review the general troubleshooting information (see page 11-3).
- Information marked with an asterisk (*) applies to the '06-07 models.

1. Turn the ignition switch to ON (II).

2. Clear the DTC with the HDS.

3. Check for Temporary DTCs or DTCs with the HDS.

   Are DTC U0037 and U1205 indicated at the same time?

   YES△Go to troubleshooting for DTC U0037.■

   NO△Go to step 4.

4. Clear the DTC with the HDS.

5. Check for Temporary DTCs or DTCs with the HDS.

   Is DTC U1205 indicated?

   YES△Go to step 6.

   NO△Intermittent failure, the system is OK at this time. Check for poor connections or loose terminals at the MCM, the BCM module, and the PCM.■

6. Check for Temporary DTCs or DTCs with the HDS again.

   Are DTC U0110 and U1205 indicated at the same time?

   YES△Go to step 7.

   NO△Go to step 15.

7. Turn the ignition switch to LOCK (0).

8. Remove the rear seat (see page 20-118).

9. Turn the battery module switch OFF.

10. Remove the IPU lid (see page 12-180).

11. Remove the BCM module (see page 12-182).

12. Check for poor connections at the MCM 20P connector.

    Are the connections OK?

    YES△Go to step 12.

    NO△Repair the poor connections at the MCM 20P connector, then go to step 32.

13. Reconnect BCM module connector A (40P), then turn the ignition switch to ON (II), and measure the voltage between MCM 20P connector terminal No. 18 and body ground within 1 second.

MCM 20P CONNECTOR

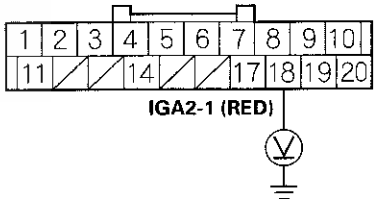

Wire side of female terminals

Is there battery voltage?

YES△Go to step 14.

NO△Go to step 23.

(cont'd)

DTC Troubleshooting (cont'd)

14. Check for continuity between body ground and MCM 20P connector terminals No. 2 and No. 9* individually.

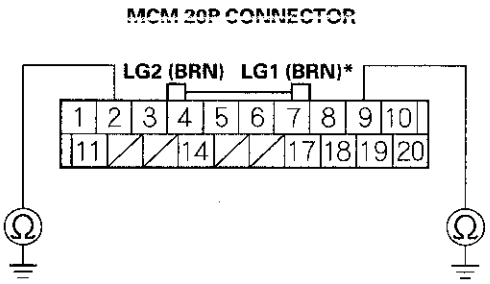

Wire side of female terminals

Is there continuity?

YES△Update the MCM if it does not have the latest software (see page 12-185), or substitute a known-good MCM (see page 12-8), then go to step 32 and recheck. If DTC U1205 is not indicated with a known-good MCM, replace the original MCM (see page 12-186), then go to step 32.

NO△Repair open in the wire between the MCM (No. 2 and/or No. 9) and G102 (see page 22-16), then go to step 32.

15. Turn the ignition switch to LOCK (0).

16. Remove the rear seat (see page 20-118).

17. Turn the battery module switch OFF.

18. Remove the IPU lid (see page 12-180).

19. Remove the BCM module (see page 12-182).

20. Disconnect the MCM 20P connector.

21. Check for continuity between BCM module connector terminal A20 and MCM 20P connector terminal No. 11.

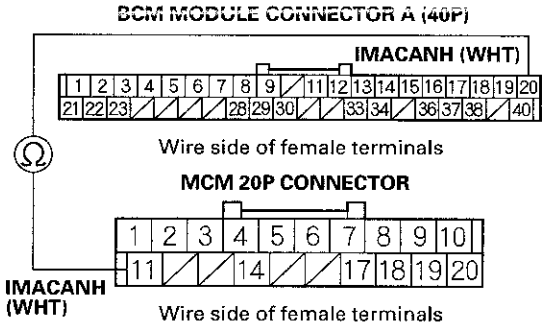

Is there continuity?

YES△Go to step 22.

NO△Repair open in the wire between the BCM module (A20) and the MCM (No. 11), then go to step 32.

22. Check for continuity between BCM module connector terminal A40 and MCM 20P connector terminal No. 1.

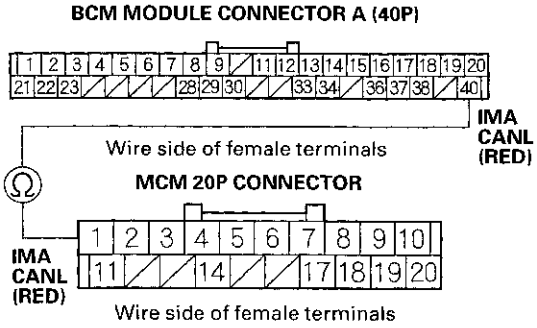

Is there continuity?

YES△Update the MCM if it does not have the latest software (see page 12-185), or substitute a known-good MCM (see page 12-8), then go to step 32 and recheck. If DTC U1205 is not indicated with a known-good MCM, replace the original MCM (see page 12-186), then go to step 32.

NO△Repair open in the wire between the BCM module (A40) and the MCM (No. 1), then go to step 32.

23. Turn the ignition switch to LOCK (0).

24. Remove MCM relay 2, and test it (see page 22-64).

Is MCM relay 2 OK?

YES△Go to step 25.

NO△Replace MCM relay 2, then go to step 32.

25. Check the +B IMA2 (10 A) fuse in the auxiliary under-hood fuse/relay box.

Is the fuse OK?

YES△Go to step 26.

NO△
- Repair short in the wire between the +B IMA2 (10 A) fuse and MCM relay 2. Also replace the +B IMA2 (10 A) fuse, then go to step 32.
- Repair short in the wire between MCM relay 2 and the MCM, the IPU module fan. Also replace the +B IMA2 (10 A) fuse, then go to step 32.

(cont'd)

DTC Troubleshooting (cont'd)

26. Measure the voltage between MCM relay 2 4P connector terminal No. 2 and body ground.

MCM RELAY 2 4P CONNECTOR

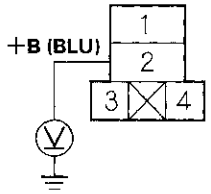

Wire side of female terminals

Is there battery voltage?

YES△Go to step 27.

NO△Repair open in the wire between the +B IMA2 (10 A) fuse and MCM relay 2, then go to step 32.

27. Check for continuity between MCM relay 2 4P connector terminal No. 1 and MCM 20P connector terminal No. 18.

MCM RELAY 2 4P CONNECTOR

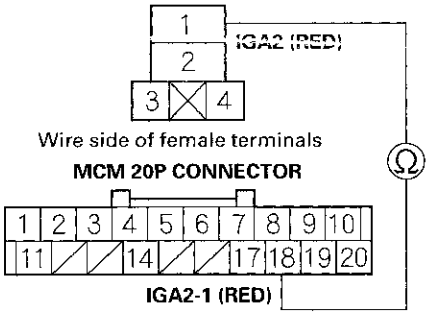

Is there continuity?

YES△Go to step 28.

NO△Repair open in the wire between the MCM (No. 18) and MCM relay 2, then go to step 32.

28. Disconnect BCM module connector A (40P) (see page 12-182).

29. Check for continuity between MCM relay 2 4P connector terminal No. 3 and BCM module connector terminal A12.

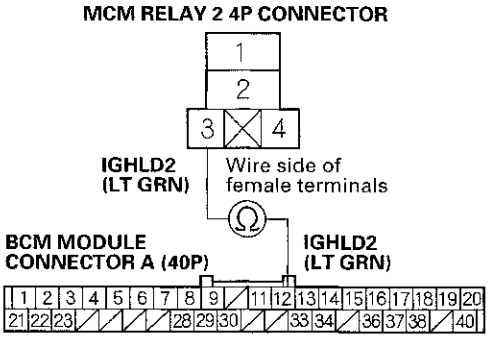

Is there continuity?

YES△Go to step 30.

NO△Repair open in the wire between the BCM module (A12) and MCM relay 2, then go to step 32.

30. Remove MCM relay 1.

31. Check for continuity between MCM relay 1 4P connector terminal No. 1 and MCM relay 2 4P connector terminal No. 4.

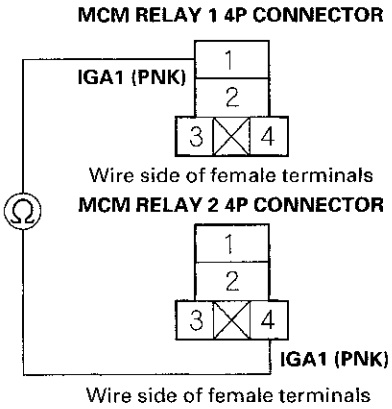

Is there continuity?

YES△Update the BCM module if it does not have the latest software (see page 12-181), or substitute a known-good BCM module (see page 12-8), then go to step 32 and recheck. If DTC U1205 is not indicated with a known-good BCM module, replace the original BCM module (see page 12-182), then go to step 32.

NO△Repair open in the wire between MCM relay 1 and MCM relay 2, then go to step 32.

(cont'd)

DTC Troubleshooting (cont'd)

32. Turn the ignition switch to LOCK (0).
33. Reconnect all connectors.
34. Reinstall the IPU lid (see page 12-180), then turn the battery module switch ON (see page 12-4).
35. Turn the ignition switch to ON (II).
36. Reset the PCM with the HDS.
37. Do the PCM idle learn procedure (see page 11-333).
38. Check for Temporary DTCs or DTCs with the HDS.

    Is DTC U1205 indicated?

    YES△Check for poor connections or loose terminals at the MCM, the BCM module, and the PCM, then go to step 1.

    NO△Troubleshooting is complete. If any other Temporary DTCs or DTCs are indicated, go to the indicated DTC's troubleshooting.■

DTC U1206: IMA-CAN Malfunction (PCM-BCM Module)

NOTE: Before you troubleshoot, record all freeze data and any on-board snapshot, and review the general troubleshooting information (see page 11-3).

1. Turn the ignition switch to ON (II).
2. Clear the DTC with the HDS.
3. Check for Temporary DTCs or DTCs with the HDS.

    Are DTC U0037 and U1206 indicated at the same time?

    YES△Go to troubleshooting for DTC U0037.■

    NO△Go to step 4.

4. Clear the DTC with the HDS.
5. Check for Temporary DTCs or DTCs with the HDS.

    Is DTC U1206 indicated?

    YES△Go to step 6.

    NO△Intermittent failure, the system is OK at this time. Check for poor connections or loose terminals at the MCM, the BCM module, and the PCM.■

6. Turn the ignition switch to LOCK (0).
7. Remove the rear seat (see page 20-118).
8. Turn the battery module switch OFF.
9. Remove the IPU lid (see page 12-180).

10. Remove the BCM module (see page 12-182).

11. Disconnect the MCM 20P connector.

12. Check for continuity between BCM module connector terminal A20 and MCM 20P connector terminal No. 11.

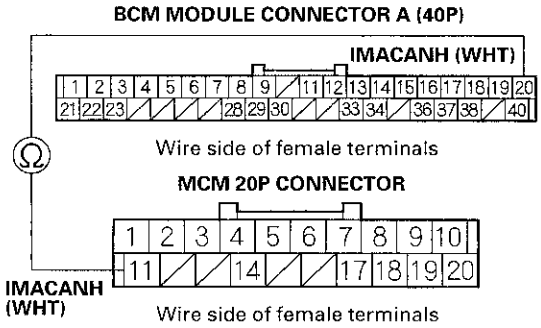

Is there continuity?

YES△Go to step 13.

NO△Repair open in the wire between the BCM module (A20) and the MCM (No. 11), then go to step 14.

13. Check for continuity between BCM module connector terminal A40 and MCM 20P connector terminal No.1.

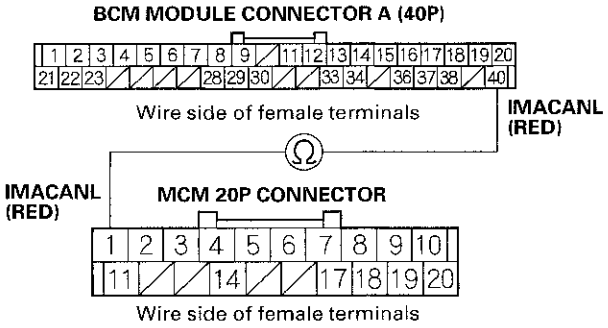

Is there continuity?

YES△Update the BCM module if it does not have the latest software (see page 12-181), or substitute a known-good BCM module (see page 12-8), then go to step 14 and recheck. If DTC U1206 is not indicated with a known-good BCM module, replace the original BCM module (see page 12-182), then go to step 14.

NO△Repair open in the wire between the BCM module (A40) and the MCM (No. 1), then go to step 14.

(cont'd)

DTC Troubleshooting (cont'd)

14. Turn the ignition switch to LOCK (0).

15. Reconnect all connectors.

16. Reinstall the IPU lid (see page 12-180), then turn the battery module switch ON (see page 12-4).

17. Turn the ignition switch to ON (II).

18. Reset the PCM with the HDS.

19. Do the PCM idle learn procedure (see page 11-333).

20. Check for Temporary DTCs or DTCs with the HDS.

    Is DTC U1206 indicated?

    YES△Check for poor connections or loose terminals at the MCM, the BCM module, and the PCM, then go to step 1.

    NO△Troubleshooting is complete. If any other Temporary DTCs or DTCs are indicated, go to the indicated DTC's troubleshooting.■

DTC U1207: IMA-CAN Malfunction (PCM-A/C Compressor Driver)

NOTE: Before you troubleshoot, record all freeze data and any on-board snapshot, and review the general troubleshooting information (see page 11-3).

1. Turn the ignition switch to ON (II).

2. Clear the DTC with the HDS.

3. Check for Temporary DTCs or DTCs with the HDS.

   Are U0037 and DTC U1207 indicated at the same time?

   YES△Go to Troubleshooting for DTC P0037.■

   NO△Go to step 4.

4. Check for Temporary DTCs or DTCs with the HDS again.

   Is DTC U1207 indicated?

   YES△Go to step 5.

   NO△Intermittent failure, the system is OK at this time. Check for poor connections or loose terminals at the MCM, the BCM module, the A/C compressor driver, and the PCM.■

5. Check the No. 9 (7.5 A) fuse in under-dash fuse/relay box.

   Is the fuse OK?

   YES△Go to step 6.

   NO△Repair short in the wire the A/C compressor driver and the No. 9 (7.5 A) fuse. Also replace the No. 9 (7.5 A) fuse, then go to step 21.

6. Turn the ignition switch to LOCK (0).

7. Remove the rear seat (see page 20-118).

8. Turn the battery module switch OFF.

9. Remove the IPU lid (see page 12-180).

10. Disconnect BCM module connector A (40P) (see page 12-182).

11. Disconnect the A/C compressor driver 4P connector (see page 21-109).

12. Check for continuity between BCM module connector terminal A20 and A/C compressor driver 4P connector terminal No. 2.

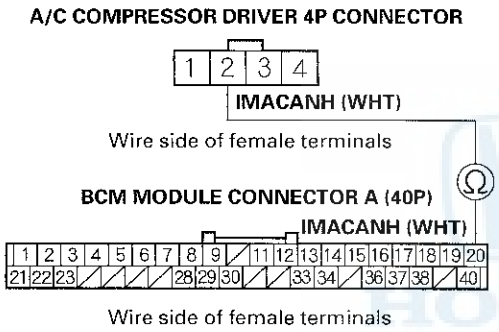

Is there continuity?

YES△Go to step 13.

NO△Repair open in the wire between the BCM module (A20) and the A/C compressor driver, then go to step 19.

13. Check for continuity between BCM module connector terminal A40 and A/C compressor driver 4P connector terminal No. 3.

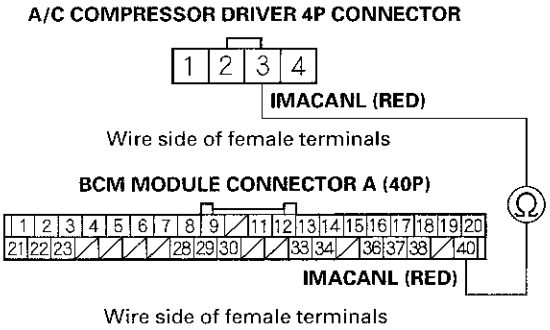

Is there continuity?

YES△Go to step 14.

NO△Repair open in the wire between the BCM module (A40) and the A/C compressor driver, then go to step 19.

(cont'd)

DTC Troubleshooting (cont'd)

14. Turn the ignition switch to ON (II).

15. Measure the voltage between A/C compressor driver 4P connector terminal No. 4 and body ground.

A/C COMPRESSOR DRIVER 4P CONNECTOR

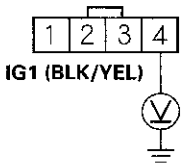

Wire side of female terminals

Is there battery voltage?

YES△Go to step 16.

NO△Repair open in the wire the A/C compressor driver and the No. 9 (7.5 A) fuse, then go to step 18.

16. Turn the ignition switch to LOCK (0).

17. Check for continuity between A/C compressor driver 4P connector terminal No. 1 and body ground.

A/C COMPRESSOR DRIVER 4P CONNECTOR

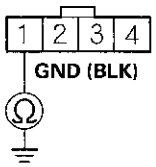

Wire side of female terminals

Is there continuity?

YES△Substitute a known-good A/C compressor driver (see page 21-109), then go to step 18 and recheck. If DTC U1207 is not indicated, replace the original A/C compressor driver (see page 21-109), then go to step 18.

NO△Repair open in the wire between the A/C compressor driver and G902, then go to step 19.

18. Turn the ignition switch to LOCK (0).

19. Reconnect all connectors.

20. Reinstall the IPU lid (see page 12-180), then turn the battery module switch ON (see page 12-4).

21. Turn the ignition switch to ON (II).

22. Reset the PCM with the HDS.

23. Do the PCM idle learn procedure (see page 11-333).

24. Check for Temporary DTCs or DTCs with the HDS.

    Is DTC U1207 indicated?

    YES△Check for poor connections or loose terminals at the MCM, the BCM module, the A/C compressor driver, and the PCM, then go to step 1.

    NO△Troubleshooting is complete. If any other Temporary DTCs or DTCs are indicated, go to the indicated DTC's troubleshooting. ■

F-CAN Circuit Troubleshooting (Part 1)

1. Turn the ignition switch to LOCK (0).
2. Jump the SCS line with the HDS.
3. Disconnect PCM connector A (44P), then disconnect the HDS.
4. Measure the resistance between PCM connector terminals A36 and A37.

PCM CONNECTOR A (44P)

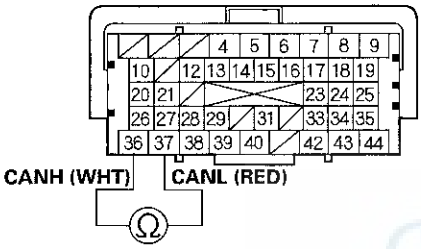

Terminal side of female terminals

Is there about 95– 116 Ω (with ABS), 91– 111 Ω (with VSA system), or 88– 107 Ω (with VSA system and TPMS)?

YES△Go to F-CAN circuit troubleshooting (Part 2) (see page 11-208).

NO△Go to step 5.

5. Disconnect the gauge control module (tach) 36P connector (see page 22-255).
6. Disconnect the ABS modulator-control unit 25P connector (see page 19-154), or the VSA modulator-control unit 37P connector (see page 19-236) and the yaw rate-lateral acceleration sensor 4P connector (see page 19-234).
7. Disconnect the servo unit 25P connector (see page 19-100).
8. Disconnect EPS control unit connector D (28P) (see page 17-82).
9. Disconnect SRS unit connector A (28P) (see page 24-199).
10. With TPMS: Disconnect the TPMS control unit 20P connector (see page 18-79).
11. Remove the rear seat (see page 20-118).
12. Turn the battery module switch OFF.
13. Remove the IPU lid (see page 12-180).
14. Remove the BCM module (see page 12-182).
15. Disconnect the MCM 20P connector (see page 12-186).
16. Check for continuity between PCM connector terminals A36 and A37.

PCM CONNECTOR A (44P)

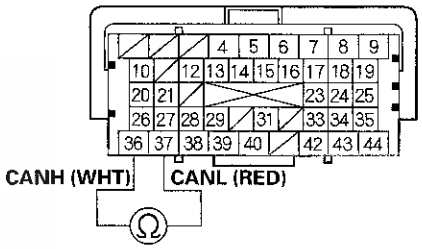

Terminal side of female terminals

Is there continuity?

YES△Repair short in the wire between PCM terminals A36 and A37. ■

NO△Go to step 17.

17. Connect PCM connector terminal A36 to body ground with a jumper wire.

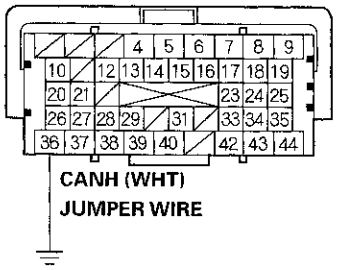

Terminal side of female terminals

18. Check for continuity between gauge control module (tach) 36P connector terminal No. 1 and body ground.

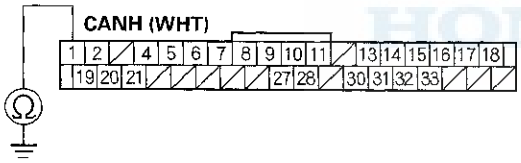

Wire side of female terminals

Is there continuity?

YES△
- With VSA system: Go to step 19.
- With ABS: Go to step 21.

NO△Repair open in the wire between the PCM (A36) and the gauge control module (tach). ■

19. Check for continuity between VSA modulator-control unit 37P connector terminal No. 15 and body ground.

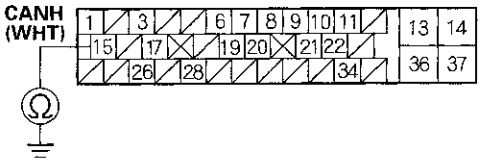

Wire side of female terminals

Is there continuity?

YES△Go to step 20.

NO△Repair open in the wire between the PCM (A36) and the VSA modulator-control unit. ■

20. Check for continuity between yaw rate-lateral acceleration 5P connector terminal No. 3 and body ground.

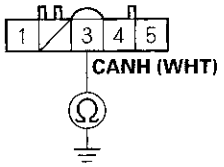

Wire side of female terminals

Is there continuity?

YES△Go to step 22.

NO△Repair open in the wire between the PCM (A36) and the yaw rate-lateral acceleration sensor. ■

(cont'd)

F-CAN Circuit Troubleshooting (Part 1) (cont'd)

21. Check for continuity between ABS modulator-control unit 25P connector terminal No. 1 and body ground.

ABS MODULATOR-CONTROL UNIT 25P CONNECTOR

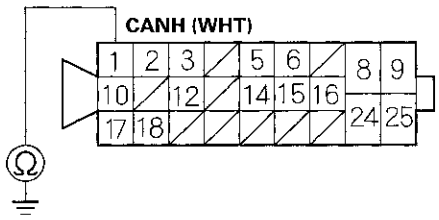

Wire side of female terminals

Is there continuity?

YES△Go to step 22.

NO△Repair open in the wire between the PCM (A36) and the ABS modulator-control unit.■

22. Check for continuity between servo unit 25P connector terminal No. 1 and body ground.

SERVO UNIT 25P CONNECTOR

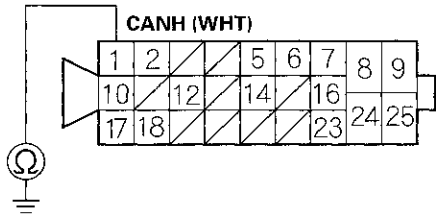

Wire side of female terminals

Is there continuity?

YES△Go to step 23.

NO△Repair open in the wire between the PCM (A36) and the servo unit.■

23. Check for continuity between EPS control unit connector D (28P) terminal No. 1 and body ground.

EPS CONTROL UNIT CONNECTOR D (28P)

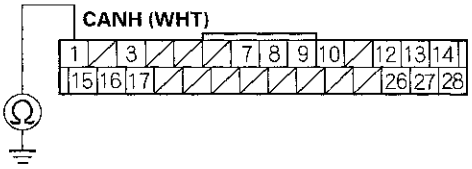

Wire side of female terminals

Is there continuity?

YES△Go to step 24.

NO△Repair open in the wire between the PCM (A36) and the EPS control unit.■

24. Check for continuity between SRS unit connector A (28P) terminal No. 11 and body ground.

SRS UNIT CONNECTOR A (28P)

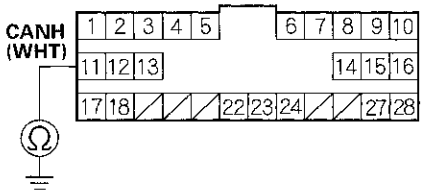

Wire side of female terminals

Is there continuity?

YES△Go to step 25.

NO△Repair open in the wire between the PCM (A36) and the SRS unit.■

25. Check for continuity between BCM module connector terminal A1 and body ground.

BCM MODULE CONNECTOR A (40P)

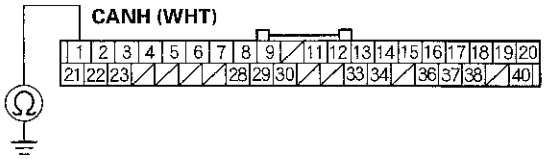

Wire side of female terminals

Is there continuity?

YES△Go to step 26.

NO△Repair open in the wire between the PCM (A36) and the BCM module.■

26. Check for continuity between MCM 20P connector terminal No. 20 and body ground.

MCM 20P CONNECTOR

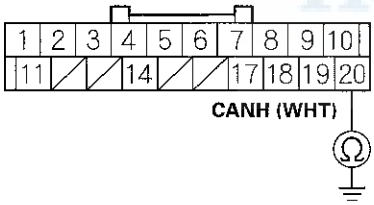

Wire side of female terminals

Is there continuity?

YES△
- With TPMS: Go to step 27.
- Without TPMS: Go to step 28.

NO△Repair open in the wire between the PCM (A36) and the MCM.■

27. Check for continuity between TPMS control unit 20P connector terminal No. 2 and body ground.

TPMS CONTROL UNIT 20P CONNECTOR

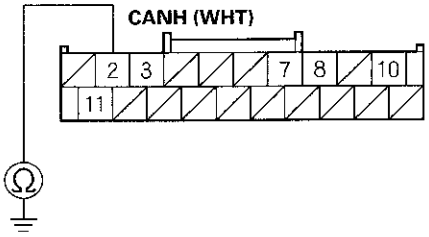

Wire side of female terminals

Is there continuity?

YES△Go to step 28.

NO△Repair open in the wire between the PCM (A36) and the TPMS control unit.■

(cont'd)

F-CAN Circuit Troubleshooting (Part 1) (cont'd)

28. Remove the jumper wire from PCM connector A (44P).

29. Connect PCM connector terminal A37 to body ground with a jumper wire.

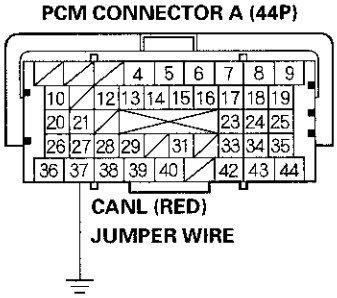

Terminal side of female terminals

30. Check for continuity between gauge control module (tach) 36P connector terminal No. 19 and body ground.

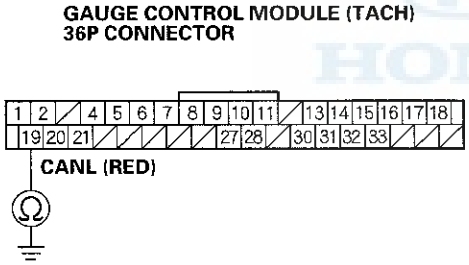

Wire side of female terminals

Is there continuity?

YES△
- With VSA system: Go to step 31.
- With ABS: Go to step 33.

NO△Repair open in the wire between the PCM (A37) and the gauge control module (tach).■

31. Check for continuity between VSA modulator-control unit 37P connector terminal No. 1 and body ground.

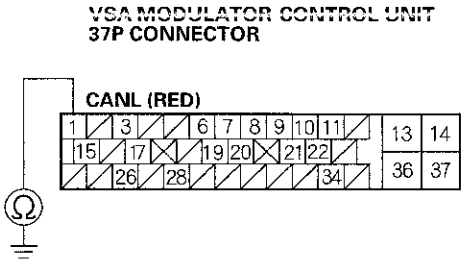

Wire side of female terminals

Is there continuity?

YES△Go to step 32.

NO△Repair open in the wire between the PCM (A37) and the VSA modulator-control unit.■

32. Check for continuity between yaw rate-lateral acceleration sensor 5P connector terminal No. 4 and body ground.

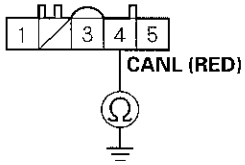

Wire side of female terminals

Is there continuity?

YES△Go to step 34.

NO△Repair open in the wire between the PCM (A37) and the yaw rate-lateral acceleration sensor.■

33. Check for continuity between ABS modulator-control unit 25P connector terminal No. 17 and body ground.

ABS MODULATOR-CONTROL UNIT 25P CONNECTOR

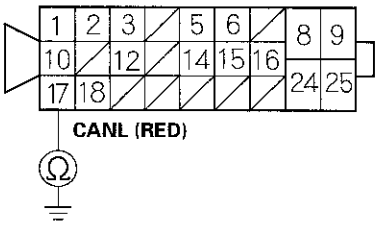

Wire side of female terminals

Is there continuity?

YES△Go to step 34.

NO△Repair open in the wire between the PCM (A37) and the ABS modulator-control unit.■

34. Check for continuity between servo unit 25P connector terminal No. 17 and body ground.

SERVO UNIT 25P CONNECTOR

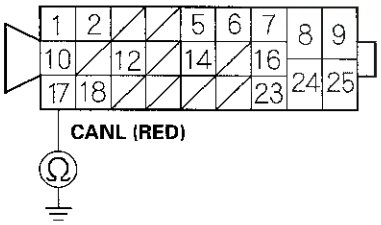

Wire side of female terminals

Is there continuity?

YES△Go to step 35.

NO△Repair open in the wire between the PCM (A37) and the servo unit.■

35. Check for continuity between EPS control unit connector D (28P) terminal No. 15 and body ground.

EPS CONTROL UNIT CONNECTOR D (28P)

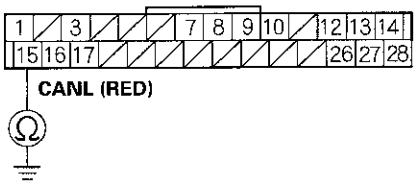

Wire side of female terminals

Is there continuity?

YES△Go to step 36.

NO△Repair open in the wire between the PCM (A37) and the EPS control unit.■

36. Check for continuity between SRS unit connector A (28P) terminal No. 12 and body ground.

SRS UNIT CONNECTOR A (28P)

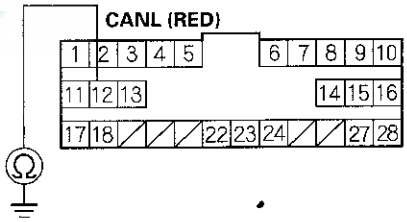

Wire side of female terminals

Is there continuity?

YES△Go to step 37.

NO△Repair open in the wire between the PCM (A37) and the SRS unit.■

(cont'd)

F-CAN Circuit Troubleshooting (Part 1) (cont'd)

37. Check for continuity between BCM module connector terminal A21 and body ground.

BCM MODULE CONNECTOR A (40P)

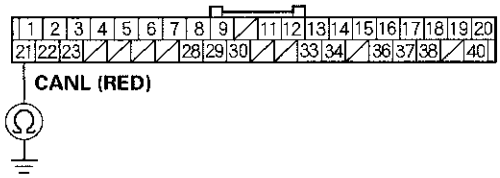

Wire side of female terminals

Is there continuity?

YES△Go to step 38.

NO△Repair open in the wire between the PCM (A37) and the BCM module.■

38. Check for continuity between MCM 20P connector terminal No. 10 and body ground.

MCM 20P CONNECTOR

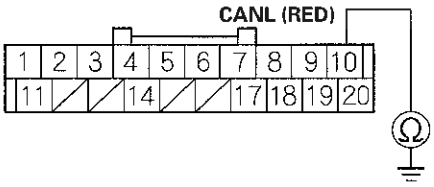

Wire side of female terminals

Is there continuity?

YES△
- With TPMS: Go to step 39.
- Without TPMS: Go to step 40.

NO△Repair open in the wire between the PCM (A37) and the MCM.■

39. Check for continuity between TPMS control unit 20P connector terminal No. 11 and body ground.

TPMS CONTROL UNIT 20P CONNECTOR

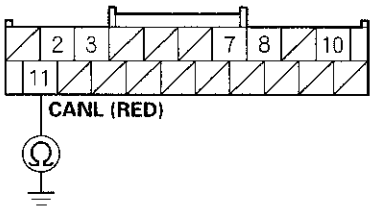

Wire side of female terminals

Is there continuity?

YES△Go to step 40.

NO△Repair open in the wire between the PCM (A37) and the TPMS control unit.■

40. Remove the jumper wire from PCM connector A (44P).

41. Reconnect the gauge control module (tach) 36P connector.

42. Measure the resistance between PCM connector terminals A36 and A37.

PCM CONNECTOR A (44P)

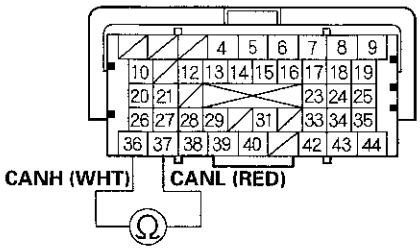

Terminal side of female terminals

Is there about 2.34–2.86 kΩ ?

YES△
- With VSA system: Go to step 45.
- With ABS: Go to step 51.

NO△Substitute a known-good gauge control module (tach) (see page 22-255). If the HDS identifies the vehicle, replace the original gauge control module (tach) (see page 22-255).■

43. Disconnect the gauge control module (tach) 36P connector.

44. Reconnect the VSA modulator-control unit 37P connector.

45. Measure the resistance between PCM connector terminals A36 and A37.

PCM CONNECTOR A (44P)

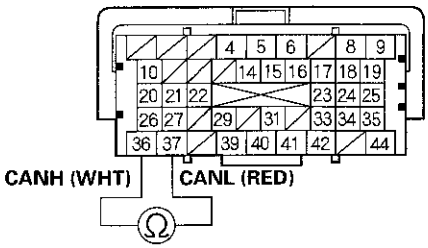

Terminal side of female terminals

Is there about 2.34–2.86 kΩ ?

YES△Go to step 46.

NO△Substitute a known-good VSA modulator-control unit (see page 19-236). If the HDS identifies the vehicle, replace the original VSA modulator-control unit (see page 19-236).■

46. Disconnect the VSA modulator-control unit 37P connector.

47. Reconnect the yaw rate-lateral acceleration sensor 5P connector.

(cont'd)

F-CAN Circuit Troubleshooting (Part 1) (cont'd)

48. Measure the resistance between PCM connector terminals A36 and A37.

PCM CONNECTOR A (44P)

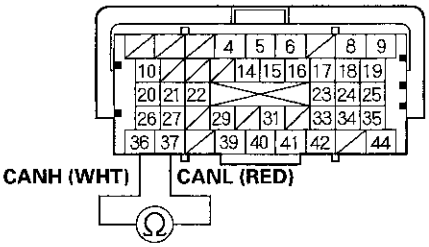

Terminal side of female terminals

Is there about 2.34–2.86 kΩ ?

YES△Go to step 52.

NO△Substitute a known-good yaw rate-lateral acceleration sensor (see page 19-234). If the HDS identifies the vehicle, replace the original yaw rate-lateral acceleration sensor (see page 19-234). ■

49. Disconnect the gauge control module (tach) 36P connector.

50. Reconnect the ABS modulator-control unit 25P connector.

51. Measure the resistance between PCM connector terminals A36 and A37.

PCM CONNECTOR A (44P)

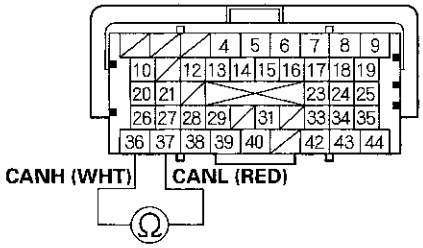

Terminal side of female terminals

Is there about 2.34–2.86 kΩ ?

YES△Go to step 52.

NO△Substitute a known-good ABS modulator-control unit (see page 19-154). If the HDS identifies the vehicle, replace the original ABS modulator-control unit (see page 19-154). ■

52. Disconnect the yaw rate-lateral acceleration sensor 5P connector (or the ABS modulator-control unit 25P connector).

53. Reconnect the servo unit 25P connector.

54. Measure the resistance between PCM connector terminals A36 and A37.

PCM CONNECTOR A (44P)

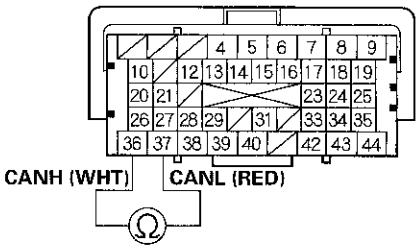

Terminal side of female terminals

Is there about 2.34 – 2.86 kΩ ?

YES△Go to step 55.

NO△Substitute a known-good servo unit (see page 19-100). If the HDS identifies the vehicle, replace the original servo unit (see page 19-100). ■

55. Disconnect the servo unit 25P connector.

56. Reconnect EPS control unit connector D (28P).

57. Measure the resistance between PCM connector terminals A36 and A37.

PCM CONNECTOR A (44P)

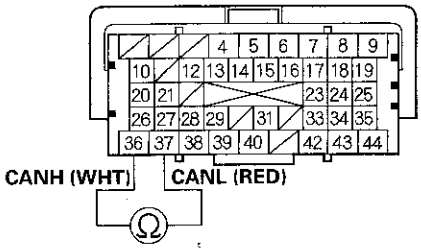

Terminal side of female terminals

Is there about 2.34 – 2.86 kΩ ?

YES△Go to step 58.

NO△Substitute a known-good EPS control unit (see page 17-82). If the HDS identifies the vehicle, replace the original EPS control unit (see page 17-82). ■

58. Disconnect EPS control unit connector D (28P).

59. Reconnect SRS unit connector A (28P).

(cont'd)

F-CAN Circuit Troubleshooting (Part 1) (cont'd)

60. Measure the resistance between PCM connector terminals A36 and A37.

PCM CONNECTOR A (44P)

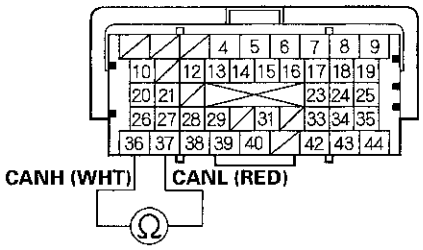

Terminal side of female terminals

Is there about 2.34–2.86 kΩ ?

YES△Go to step 61.

NO△Substitute a known-good SRS unit (see page 24-199). If the HDS identifies the vehicle, replace the original SRS unit (see page 24-199). ■

61. Disconnect SRS unit connector A (28P).

62. Reconnect BCM module connector A (40P).

63. Measure the resistance between PCM connector terminals A36 and A37.

PCM CONNECTOR A (44P)

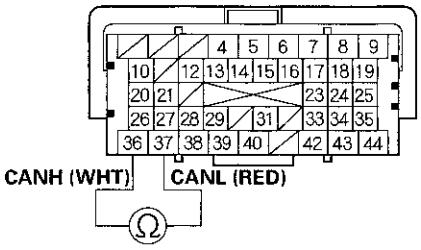

Terminal side of female terminals

Is there about 108–132 Ω ?

YES△Go to step 64.

NO△Substitute a known-good BCM module (see page 12-8). If the HDS identifies the vehicle, replace the original BCM module (see page 12-182). ■

64. Disconnect BCM module connector A (40P).

65. Reconnect the MCM 20P connector.

66. Measure the resistance between PCM connector terminals A36 and A37.

PCM CONNECTOR A (44P)

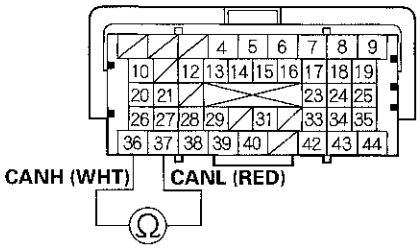

Terminal side of female terminals

Is there about 2.34– 2.86 kΩ ?

YES△
- With TPMS: Go to step 68.
- Without TPMS: Update the PCM if it does not have the latest software (see page 11-236), or substitute a known-good PCM (see page 11-7), then recheck. If the symptom/indication goes away with a known-good PCM, replace the original PCM (see page 11-238).■

NO△Substitute a known-good MCM (see page 12-8). If the HDS identifies the vehicle, replace the original MCM (see page 12-186).■

67. Disconnect the MCM 20P connector.

68. Reconnect the TPMS control unit 20P connector.

69. Measure the resistance between PCM connector terminals A36 and A37.

PCM CONNECTOR A (44P)

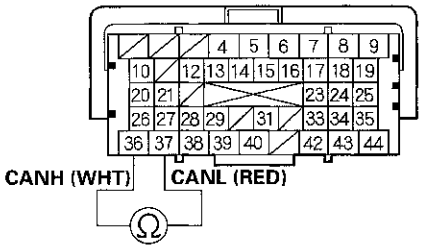

Terminal side of female terminals

Is there about 2.34– 2.86 kΩ ?

YES△Update the PCM if it does not have the latest software (see page 11-236), or substitute a known-good PCM (see page 11-7), then recheck. If the symptom/indication goes away with a known-good PCM, replace the original PCM (see page 11-238).■

NO△Substitute a known-good TPMS control unit (see page 18-79). If the HDS identifies the vehicle, replace the original TPMS control unit (see page 18-79).■

F-CAN Circuit Troubleshooting (Part 2)

1. Disconnect the gauge control module (tach) 36P connector (see page 22-255).
2. With VSA system: Disconnect the VSA modulator-control unit 37P connector (see page 19-236), and the yaw rate-lateral acceleration sensor 5P connector (see page 19-234).
3. Disconnect the ABS modulator-control unit 25P connector (see page 19-154).
4. Disconnect the servo unit 25P connector (see page 19-100).
5. Disconnect EPS control unit connector D (28P) (see page 17-82).
6. Disconnect SRS unit connector A (28P) (see page 24-199).
7. With TPMS: Disconnect the TPMS control unit 20P connector (see page 18-79).
8. Remove the rear seat (see page 20-118).
9. Turn the battery module switch OFF.
10. Remove the IPU lid (see page 12-180).
11. Remove the BCM module (see page 12-182).
12. Disconnect the MCM 20P connector (see page 12-186).
13. Check for continuity between PCM connector terminal A36 and body ground.

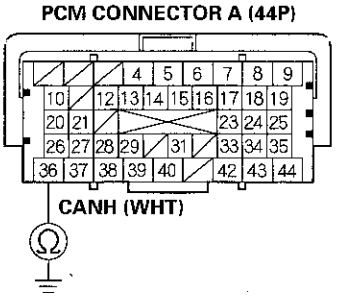

Terminal side of female terminals

Is there continuity?

YES△Repair short in the wire between PCM terminal A36 and the gauge control module (tach), the VSA modulator-control unit, yaw rate-lateral acceleration sensor, the ABS modulator-control unit, the servo unit, the EPS control unit, the SRS unit, the BCM module, the MCM, the TPMS control unit (with TPMS), or the DLC.■

NO△Go to step 14.

14. Check for continuity between PCM connector terminal A37 and body ground.

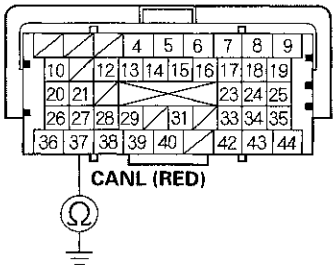

Terminal side of female terminals

Is there continuity?

YES△Repair short in the wire between PCM terminal A37 and the gauge control module (tach), the VSA modulator-control unit, yaw rate-lateral acceleration sensor, the ABS modulator-control unit, the servo unit, the EPS control unit, the SRS unit, the BCM module, the MCM, the TPMS control unit (with TPMS), or the DLC.■

NO△Go to step 15.

15. Reconnect all connectors.

16. Connect the HDS to the DLC (see page 11-3).

17. Disconnect the gauge control module (tach) 36P connector.

18. Turn the ignition switch to ON (II), and turn on the HDS.

Does the HDS identify the vehicle?

YES△Replace the gauge control module (tach) (see page 22-255).■

NO△
- With VSA system: Go to step 19.
- With ABS: Go to step 27.

19. Turn the ignition switch to LOCK (0).

20. Reconnect the gauge control module (tach) 36P connector.

21. Disconnect the VSA modulator-control unit 37P connector.

22. Turn the ignition switch to ON (II), and read the HDS.

Does the HDS identify the vehicle?

YES△Replace the VSA modulator-control unit (see page 19-236).■

NO△Go to step 23.

23. Turn the ignition switch to LOCK (0).

24. Reconnect the VSA modulator-control unit 37P connector.

25. Disconnect the yaw rate-lateral acceleration sensor 5P connector.

26. Turn the ignition switch to ON (II), and read the HDS.

Does the HDS identify the vehicle?

YES△Replace the yaw rate-lateral acceleration sensor (see page 19-234).■

NO△Go to step 32.

(cont'd)

F-CAN Circuit Troubleshooting (Part 2) (cont'd)

27. Turn the ignition switch to LOCK (0).

28. Reconnect the gauge control module (tach) 36P connector.

29. Disconnect the ABS modulator-control unit 25P connector.

30. Turn the ignition switch to ON (II), and turn on the HDS.

    Does the HDS identify the vehicle?

    YES△Replace the ABS modulator-control unit (see page 19-154).■

    NO△Go to step 31.

31. Turn the ignition switch to LOCK (0).

32. Reconnect the yaw rate-lateral acceleration sensor 5P connector (or the ABS modulator-control unit 25P connector).

33. Disconnect the servo unit 25P connector.

34. Turn the ignition switch to ON (II), and turn on the HDS.

    Does the HDS identify the vehicle?

    YES△Replace the servo unit (see page 19-100).■

    NO△Go to step 35.

35. Turn the ignition switch to LOCK (0).

36. Reconnect the servo unit 25P connector.

37. Disconnect EPS control unit connector D (28P).

38. Turn the ignition switch to ON (II), and turn on the HDS.

    Does the HDS identify the vehicle?

    YES△Replace the EPS control unit (see page 17-82).■

    NO△Go to step 39.

39. Turn the ignition switch to LOCK (0).

40. Reconnect EPS control unit connector D (28P).

41. Disconnect SRS unit connector A (28P).

42. Turn the ignition switch to ON (II), and turn on the HDS.

    Does the HDS identify the vehicle?

    YES△Replace the SRS unit (see page 24-199).■

    NO△Go to step 43.

43. Turn the ignition switch to LOCK (0).

44. Reconnect SRS unit connector A (28P).

45. Disconnect BCM module connector A (40P).

46. Turn the ignition switch to ON (II), and turn on the HDS.

    Does the HDS identify the vehicle?

    YES△Replace the BCM module (see page 12-182). ■

    NO△Go to step 47.

47. Turn the ignition switch to LOCK (0).

48. Reconnect BCM module connector A (40P).

49. Disconnect the MCM 20P connector.

50. Turn the ignition switch to ON (II), and turn on the HDS.

    Does the HDS identify the vehicle?

    YES△Replace the MCM (see page 12-186). ■

    NO△
    - With TPMS: Go to step 51.
    - Without TPMS: Update the PCM if it does not have the latest software (see page 11-236), or substitute a known-good PCM (see page 11-7), then recheck. If the symptom/indication goes away with a known-good PCM, replace the original PCM (see page 11-238). ■

51. Turn the ignition switch to LOCK (0).

52. Reconnect the MCM 20P connector.

53. Disconnect the TPMS control unit 20P connector.

54. Turn the ignition switch to ON (II), and turn on the HDS.

    Does the HDS identify the vehicle?

    YES△Replace the TPMS control unit (see page 18-79). ■

    NO△Update the PCM if it does not have the latest software (see page 11-236), or substitute a known-good PCM (see page 11-7), then recheck. If the symptom/indication goes away with a known-good PCM, replace the original PCM (see page 11-238). ■

HONDA

MIL Circuit Troubleshooting

1. Turn the ignition switch to ON (II).

2. Do the gauge self-diagnostic function (see page 22-223).

   Does the MIL indicator flash?

   YES△Go to step 3.

   NO△Substitute a known-good gauge control module (tach), and recheck. If the MIL circuit is OK, replace the original gauge control module (tach) (see page 22-255). ■

3. Connect the HDS to the DLC (see page 11-3).

4. Check the SCS in the DATA LIST with the HDS.

   Is a short indicated?

   YES△Go to step 5.

   NO△Update the PCM if it does not have the latest software (see page 11-236), or substitute a known-good PCM (see page 11-7), then recheck. If the symptom/indication goes away with a known-good PCM, replace the original PCM (see page 11-238). ■

5. Turn the ignition switch to LOCK (0).

6. Disconnect PCM connector A (44P), then disconnect the HDS.

7. Check for continuity between PCM connector terminal A31 and body ground.

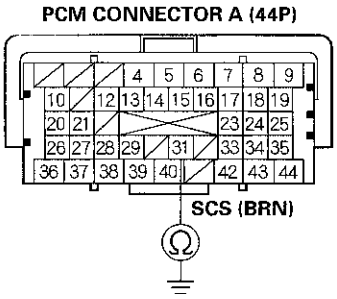

Terminal side of female terminals

   Is there continuity?

   YES△Repair short in the wire between the PCM (A31), the SRS unit, and the DLC. ■

   NO△Update the PCM if it does not have the latest software (see page 11-236), or substitute a known-good PCM (see page 11-7), then recheck. If the symptom/indication goes away with a known-good PCM, replace the original PCM (see page 11-238). ■

DLC Circuit Troubleshooting

NOTE: Make sure the HDS and the HDS DLC cable are not defective.

1. Turn the ignition switch to LOCK (0).

2. Connect the HDS to the DLC (see page 11-3).

   NOTE: Make sure the HDS is properly connected to the DLC.

3. Turn the ignition switch to ON (II), and turn on the HDS.

   Does the HDS identify the vehicle?

   YES△Go to step 4.

   NO△Go to step 27.

4. Check for Temporary DTCs or DTCs in the PGM-FI system with the HDS.

   Are any Temporary DTCs or DTCs indicated?

   YES△Go to the indicated DTC's troubleshooting. ■

   NO△Go to step 5.

5. Turn the ignition switch to LOCK (0).

6. Turn the ignition switch to ON (II), and watch the SRS indicator.

   Does the SRS indicator stay on?

   YES△Go to the SRS general troubleshooting information (see page 24-22). ■

   NO△
   - With VSA system: Go to step 7.
   - With ABS: Go to step 9.

7. Turn the ignition switch to LOCK (0).

8. Turn the ignition switch to ON (II), and watch the VSA indicator.

   Does the VSA indicator stay on?

   YES△Go to the VSA system's general troubleshooting information (see page 19-162). ■

   NO△Go to step 11.

9. Turn the ignition switch to LOCK (0).

10. Turn the ignition switch to ON (II), and watch the ABS indicator.

    Does the ABS indicator stay on?

    YES△Go to the ABS general troubleshooting information (see page 19-113).

    NO△Go to step 11.

11. Turn the ignition switch to LOCK (0).

12. Start the engine, and watch the EPS indicator.

    Does the EPS indicator stay on?

    YES△Go to the EPS system's general troubleshooting information (see page 17-19). ■

    NO△Go to step 11.

13. Turn the ignition switch to LOCK (0).

14. Turn the ignition switch to ON (II), and watch the AHB (advanced hydraulic booster) indicator.

    Does the AHB indicator stay on?

    YES△Go to the AHB system's general troubleshooting information (see page 19-45). ■

    NO△Go to step 15.

(cont'd)

DLC Circuit Troubleshooting (cont'd)

15. Turn the ignition switch to LOCK (0).

16. Turn the ignition switch to ON (II), and watch the immobilizer indicator.

    Does the immobilizer indicator stay on or flash?

    YES△Go to the immobilizer system's troubleshooting (see page 22-285).■

    NO△
    - With TPMS: Go to step 17.
    - Without TPMS: Go to step 19.

17. Turn the ignition switch to LOCK (0).

18. Turn the ignition switch to ON (II), and watch the TPMS indicator.

    Does the TPMS indicator stay on?

    YES△Go to the TPMS system's general troubleshooting (see page 18-53).■

    NO△Go to step 19.

19. Do the gauge self-diagnostic function (see page 22-223).

20. Check for B-CAN system DTCs without the HDS (see page 22-68).

    Are any B-CAN DTCs indicated?

    YES△Go to the indicated DTC's troubleshooting.■

    NO△Go to step 21.

21. Turn the ignition switch to LOCK (0).

22. Disconnect the HDS from the DLC.

23. Check for continuity between DLC terminal No. 7 and body ground.

DATA LINK CONNECTOR (DLC)

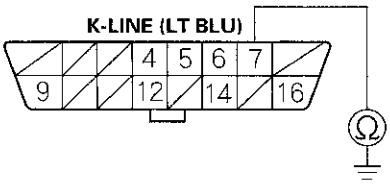

Terminal side of female terminals

Is there continuity?

YES△Go to step 24.

NO△Go to step 25.

24. Continue to check for continuity between DLC terminal No. 7 and body ground, while disconnecting these parts, one at a time:

    - SRS unit connector A (28P)
    - VSA modulator-control unit 37P connector (with VSA)
    - ABS modulator-control unit 25P connector (with ABS)
    - EPS control unit connector D (28P)
    - Servo unit 25P connector
    - Immobilizer-keyless control unit 7P connector
    - TPMS control unit 20P connector (with TPMS)
    - Audio unit 17P connector
    - Under-dash fuse/relay box Q (16P) connector

    Does continuity go away when one of the above components is disconnected?

    YES△Replace the part that caused an open when it was disconnected.■

    NO△Repair short in the wire between the DLC (K-line) and the VSA modulator-control unit, or the ABS modulator-control unit, the EPS control unit, the servo unit, the SRS unit, the immobilizer-keyless control unit, the TPMS control unit (with TPMS), the audio unit, or the under-dash fuse/relay box.■

25. Connect DLC terminal No. 7 to body ground with a jumper wire.

DATA LINK CONNECTOR (DLC)

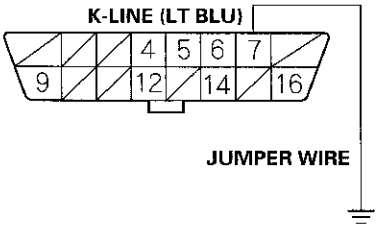

Terminal side of female terminals

26. Check for continuity between body ground and these connector terminals:

Connector	Terminal
SRS unit A (28P)	No. 24 (LT BLU)
VSA modulator-control unit 37P (with VSA system)	No. 26 (LT BLU)
ABS modulator-control unit 25P (with ABS)	No. 10 (LT BLU)
EPS control unit D (28P)	No. 17 (LT BLU)
Servo unit 25P	No. 10 (LT BLU)
Immobilizer-keyless control unit 7P	No. 5 (LT BLU)
TPMS control unit 20P (with TPMS)	No. 7 (LT BLU)
Audio unit 17P	No. 6 (LT BLU)
Under-dash fuse/relay box Q (16P)	No. 8 (LT BLU)

Is there continuity between the body ground and each of the terminals in the chart?

YES△Replace the part that does not communicate with the HDS.■

NO△Repair open in the wire between the DLC (K-line) and the appropriate connector.■

27. Do the gauge self-diagnostic function (see page 22-223).

28. Check for B-CAN system DTCs without the HDS (see page 22-68).

Is DTC B1168, B1169, and/or B1178 indicated?

YES△Go to step 41.

NO△Go to step 29.

29. Turn the ignition switch to LOCK (0).

30. Disconnect the HDS from the DLC.

31. Measure the voltage between DLC terminal No. 16 and body ground.

DATA LINK CONNECTOR (DLC)

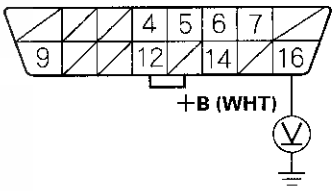

Terminal side of female terminals

Is there battery voltage?

YES△Go to step 32.

NO△Repair open in the wire between DLC terminal No. 16 and the No. 23 BACK UP (10 A) fuse in the under-hood fuse/relay box.■

(cont'd)

DLC Circuit Troubleshooting (cont'd)

32. Measure the voltage between DLC terminals No. 4 and No. 16.

DATA LINK CONNECTOR (DLC)

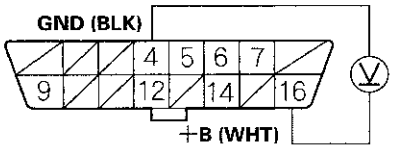

Terminal side of female terminals

Is there battery voltage?

YES△Go to step 33.

NO△Repair open in the wire between DLC terminal No. 4 and G502 (see page 22-28).■

33. Connect the HDS to the DLC (see page 11-3).

34. Jump the SCS line with the HDS.

35. Disconnect PCM connector A (44P).

36. Disconnect the HDS from the DLC.

37. Connect DLC terminal No. 6 to body ground with a jumper wire.

DATA LINK CONNECTOR (DLC)

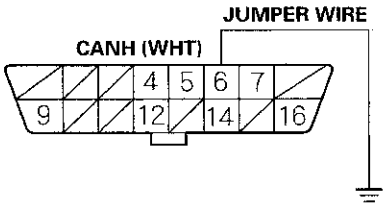

Terminal side of female terminals

38. Check for continuity between PCM connector terminal A36 and body ground.

PCM CONNECTOR A (44P)

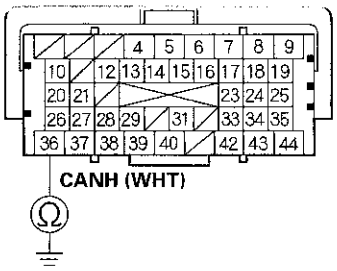

Terminal side of female terminals

Is there continuity?

YES△Go to step 39.

NO△Repair open in the wire between the PCM (A36) and DLC terminal No. 6.■

39. Connect DLC terminal No. 14 to body ground with a jumper wire.

DATA LINK CONNECTOR (DLC)

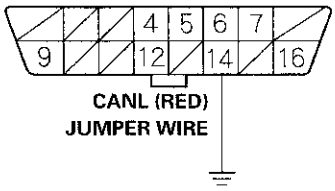

Terminal side of female terminals

40. Check for continuity between PCM connector terminal A37 and body ground.

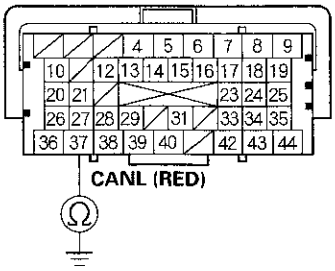

Terminal side of female terminals

Is there continuity?

YES△Update the PCM if it does not have the latest software (see page 11-236), or substitute a known-good PCM (see page 11-7), then recheck. If the symptom/indication goes away with a known-good PCM, replace the original PCM (see page 11-238).■

NO△Repair open in the wire between the PCM (A37) and DLC terminal No. 14.■

41. Try to start the engine.

Does the engine start and idle smoothly?

YES△Go to F-CAN circuit troubleshooting (see page 11-196).■

NO△Go to step 40.

42. Turn the ignition switch to LOCK (0).

43. Check the No. 2 IG MAIN (50 A) fuse in the under-hood fuse/relay box.

Is the fuse OK?

YES△Repair open in the wire between the No. 2 IG MAIN (50 A) fuse and the ignition switch. If the wire is OK, go to step 44.

NO△Repair short in the wire between the No. 2 IG MAIN (50 A) fuse and the under-hood fuse/relay box. Also replace the No. 2 IG MAIN (50 A) fuse.■

(cont'd)

DLC Circuit Troubleshooting (cont'd)

44. Inspect the No. 19 FI MAIN (15 A) fuse in the under-hood fuse/relay box.

    Is the fuse OK?

    YES△Go to step 51.

    NO△Go to step 45.

45. Remove the blown No. 19 FI MAIN (15 A) fuse from the under-hood fuse/relay box.

46. Remove PGM-FI main relay 1 (C) from the under-hood fuse/relay box.

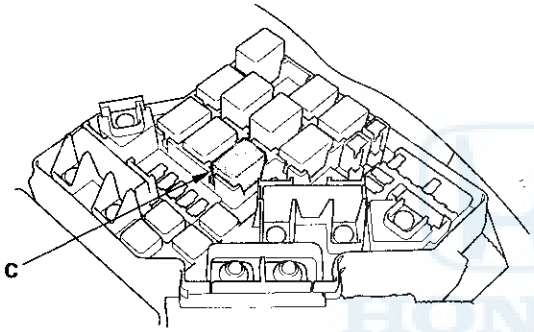

47. Check for continuity between body ground and PGM-FI main relay 1 4P connector terminals No. 1 and No. 3 individually.

PGM-FI MAIN RELAY 1 4P CONNECTOR

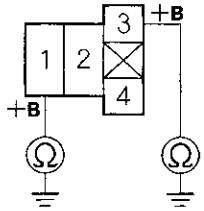

Terminal side of female terminals

Is there continuity?

YES△Replace the under-hood fuse/relay box (see page 22-59). Also replace the No. 19 FI MAIN (15 A) fuse.■

NO△Go to step 48.

48. Disconnect each of the parts or connectors below, one at a time, and check for continuity between PGM-FI main relay 1 4P connector terminal No. 2 and body ground.

- PGM-FI main relay 2
- PCM connector A (44P)
- Each injector 2P connector
- Camshaft position (CMP) sensor 3P connector
- Crankshaft position (CKP) sensor 3P connector
- Ignition coil relay
- Electronic throttle control system (ETCS) control relay

PGM-FI MAIN RELAY 1 4P CONNECTOR

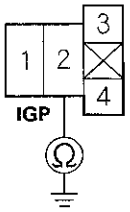

Terminal side of female terminals

Does continuity go away when one of the above components is disconnected?

YES△Replace the part that made the short to body ground go away when it was disconnected. If the part is the PCM, update the PCM if it does not have the latest software (see page 11-236), or substitute a known-good PCM (see page 11-7), then recheck. If the symptom/indication goes away with a known-good PCM, replace the original PCM (see page 11-238). Also replace the No. 19 FI MAIN (15 A) fuse.■

NO△Go to step 49.

49. Disconnect the connectors from these part;

- PGM-FI main relay 2
- PCM connector A (44P)
- Injectors
- Camshaft position (CMP) sensor
- Crankshaft position (CKP) sensor
- Ignition coil relay
- Electronic throttle control system (ETCS) control relay

50. Check for continuity between PGM-FI main relay 1 4P connector terminal No. 2 and body ground.

PGM-FI MAIN RELAY 1 4P CONNECTOR

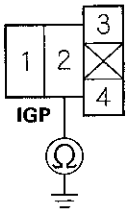

Terminal side of female terminals

Is there continuity?

YES△Repair short in the wire between PGM-FI main relay 1 and each part. Also replace the No. 19 FI MAIN (15 A) fuse.■

NO△Replace PGM-FI main relay 1. Also replace the No. 19 FI MAIN (15 A) fuse.■

(cont'd)

DLC Circuit Troubleshooting (cont'd)

51. Inspect the No. 2 FUEL PUMP (15 A) fuse in the under-dash fuse/relay box.

    Is the fuse OK?

    YES△Go to step 60.

    NO△Go to step 52.

52. Remove the blown No. 2 FUEL PUMP (15 A) fuse from the under-dash fuse/relay box.

53. Remove PGM-FI main relay 2 (A) from the auxiliary under-hood fuse/relay box.

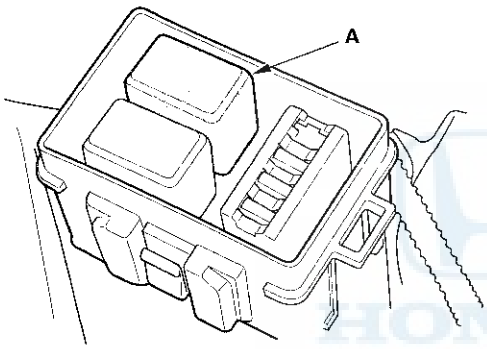

54. Test PGM-FI main relay 2 (FUEL PUMP) (see page 22-64).

    Is the relay OK?

    YES△Go to step 55.

    NO△Replace PGM-FI main relay 2 (FUEL PUMP). Also replace the No. 2 FUEL PUMP (15 A) fuse.■

55. Check for continuity between PGM-FI main relay 2 (FUEL PUMP) 4P connector terminal No. 2 and body ground.

PGM-FI MAIN RELAY 2 4P CONNECTOR

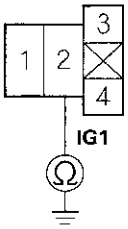

Terminal side of female terminals

Is there continuity?

YES△Go to step 56.

NO△Go to step 58.

56. Jump the SCS line with the HDS, then disconnect PCM connectors C (44P).

57. Check for continuity between PCM connector terminal C36 and body ground.

PCM CONNECTOR C (44P)

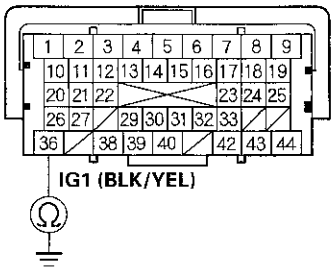

Terminal side of female terminals

Is there continuity?

YES△Repair short in the wire between the No. 2 FUEL PUMP (15 A) fuse and the PCM (C36), between the No. 2 FUEL PUMP (15 A) fuse and PGM-FI main relay 2, or between the No. 2 FUEL PUMP (15 A) fuse and the immobilizer control unit. Also replace the No. 2 FUEL PUMP (15 A) fuse.■

NO△Replace the No. 2 FUEL PUMP (15 A) fuse, and update the PCM if it does not have the latest software (see page 11-236), or substitute a known-good PCM (see page 11-7), then recheck. If the symptom/indication goes away with a known-good PCM, replace the original PCM (see page 11-238).■

58. Disconnect the fuel unit subharness 4P connector.

59. Check for continuity between floor harness C651 4P connector terminal No. 3 and body ground.

FLOOR WIRE HARNESS C651 4P CONNECTOR

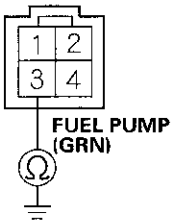

Terminal side of male terminals

Is there continuity?

YES△
- Repair short in the wire between the fuel unit subharness and PGM-FI main relay 2. Also replace the No. 2 FUEL PUMP (15 A) fuse.■
- Check the fuel unit subharness (see page 11-366), and repair it if needed.■

NO△
- Check the fuel pump, and replace it if needed (see page 11-364). Also replace the No. 2 FUEL PUMP (15 A) fuse.■
- Check the fuel unit subharness (see page 11-366), and repair it if needed. Also replace the No. 2 FUEL PUMP (15 A) fuse.■

60. Jump the SCS line with the HDS.

61. Disconnect PCM connectors A (44P) and C (44P).

62. Turn the ignition switch to ON (II).

(cont'd)

DLC Circuit Troubleshooting (cont'd)

63. Measure the voltage between PCM connector terminal C36 and body ground.

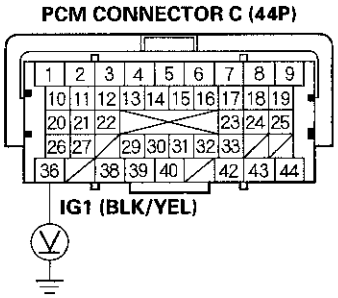

Terminal side of female terminals

Is there battery voltage?

YES△Go to step 64.

NO△Repair open in the wire between the No. 2 FUEL PUMP (15 A) fuse and the PCM (C36).■

64. Measure the voltage between PCM connector terminal A6 and body ground.

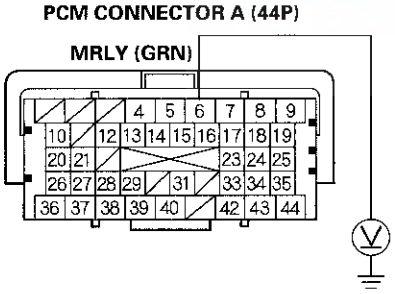

Terminal side of female terminals

Is there battery voltage?

YES△Go to step 69.

NO△Go to step 65.

65. Turn the ignition switch to LOCK (0).

66. Remove PGM-FI main relay 1 (C) from the under-hood fuse/relay box.

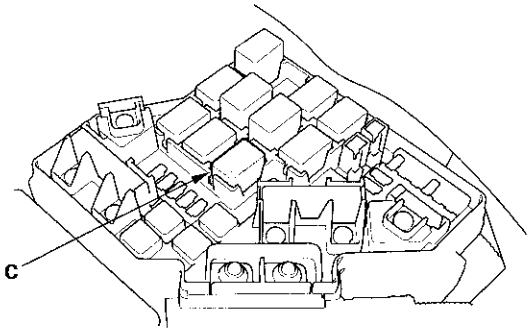

67. Measure the voltage between PGM-FI main relay 1 4P connector terminal No. 3 and body ground.

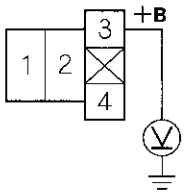

Terminal side of female terminals

Is there battery voltage?

YES△Go to step 68.

NO△Replace the under-hood fuse/relay box (see page 22-59).■

68. Check for continuity between PGM-FI main relay 1 4P connector terminal No. 4 and PCM connector terminal A6.

PGM-FI MAIN RELAY 1 4P CONNECTOR

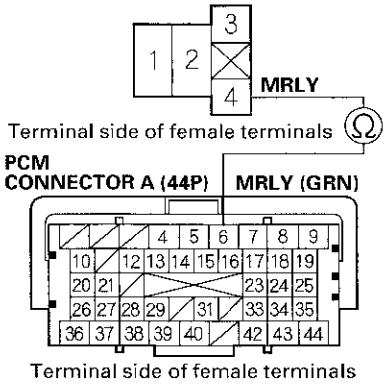

Is there continuity?

YES△Test PGM-FI main relay 1 (see page 22-64). If the relay is OK, update the PCM if it does not have the latest software (see page 11-236), or substitute a known-good PCM (see page 11-7), then recheck. If the symptom/indication goes away with a known-good PCM, replace the original PCM (see page 11-238).■

NO△Repair open in the wire between the PCM (A6) and PGM-FI main relay 1.■

69. Turn the ignition switch to LOCK (0).

70. Remove PGM-FI main relay 1 (C) from the under-hood fuse/relay box.

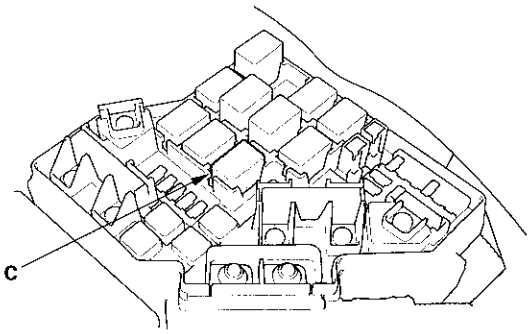

71. Measure the voltage between PGM-FI main relay 1 4P connector terminal No. 1 and body ground.

PGM-FI MAIN RELAY 1 4P CONNECTOR

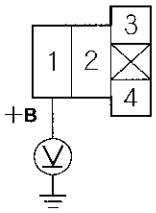

Terminal side of female terminals

Is there battery voltage?

YES△Go to step 72.

NO△Replace the under-hood fuse/relay box (see page 22-59).■

(cont'd)

DLC Circuit Troubleshooting (cont'd)

72. Check for continuity between PGM-FI main relay 1 4P connector terminal No. 2 and PCM connector terminal A8 and A43 individually.

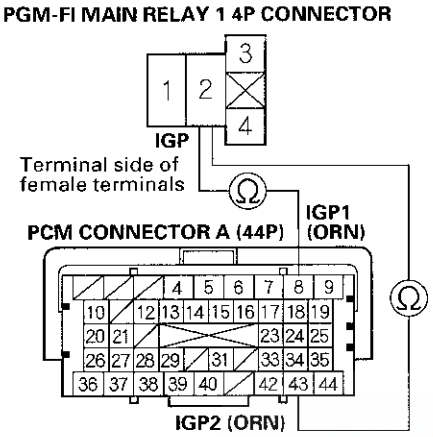

Terminal side of female terminals

Is there continuity?

YES△Go to step 73.

NO△Repair open in the wire between the PCM (A8, A43) and PGM-FI main relay 1.■

73. Test PGM-FI main relay 1 (see page 22-64).

Is PGM-FI main relay 1 OK?

YES△Go to step 74.

NO△Replace PGM-FI main relay 1.■

74. Disconnect PCM connector B (44P).

75. Check for continuity between body ground and PCM connector terminals B1, B36, C2, C40, and C44 individually.

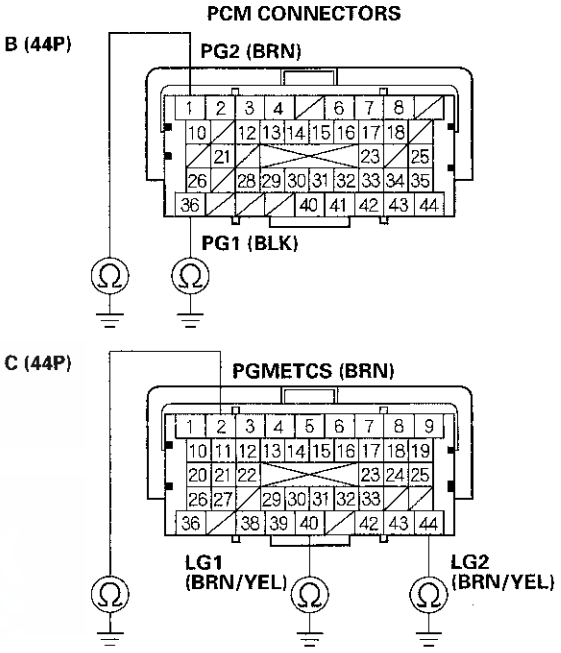

Terminal side of female terminals

Is there continuity?

YES△Go to step 76.

NO△Repair open in the wire between the PCM (B1, B36, C2, C40, C44) and G102 (see page 22-16).■

76. Check for continuity between PCM connector terminal C13 and body ground.

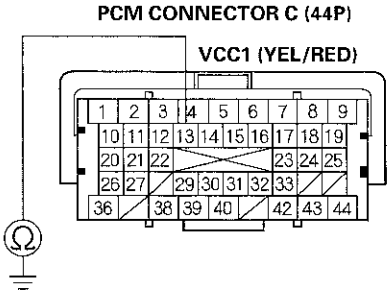

Terminal side of female terminals

Is there continuity?

YES△Go to step 77.

NO△Go to step 78.

77. Continue to check for continuity between PCM connector terminal C13 and body ground, while disconnecting these connectors, one at a time:

- MAP sensor 3P connector
- Output shaft (driven pulley) speed sensor 3P connector
- CVT speed sensor 3P connector ('06 model)

Does continuity go away when one of the above connectors is disconnected?

YES△Replace the part that caused an open when it was disconnected.■

NO△Repair short in the wire between the PCM (C13) and the MAP sensor, the output shaft (driven pulley) speed sensor or CVT speed sensor ('06 model).■

78. Check for continuity between PCM connector terminal B18 and body ground.

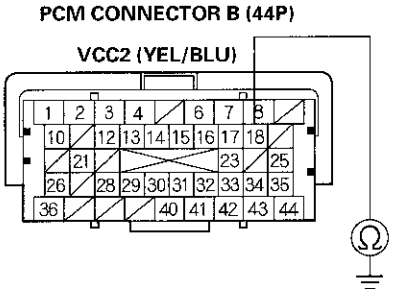

Terminal side of female terminals

Is there continuity?

YES△Go to step 79.

NO△Go to step 80.

79. Continue to check for continuity between PCM connector terminal B18 and body ground, while disconnecting these parts, one at a time:

- Rocker arm oil pressure sensor 3P connector
- EGR valve 6P connector
- Input shaft (drive pulley) speed sensor 3P connector
- CVT speed sensor (secondary) 3P connector ('06 model)
- CVT speed sensor 3P connector ('07-09 models)

Does continuity go away when one of the above parts is disconnected?

YES△Replace the part that caused an open when it was disconnected.■

NO△Repair short in the wire between the PCM (B18) and the rocker arm oil pressure sensor, the EGR valve, the input shaft (drive pulley) speed sensor, CVT speed sensor (secondary) ('06 model), or CVT speed sensor ('07-09 models).■

(cont'd)

DLC Circuit Troubleshooting (cont'd)

80. Check for continuity between PCM connector terminal C12 and body ground.

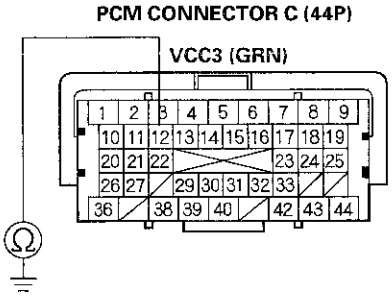

Terminal side of female terminals

Is there continuity?

YES△Go to step 81.

NO△Go to step 82.

81. Continue to check for continuity between PCM connector terminal C12 and body ground, while disconnecting the throttle body 6P connector.

Is there continuity?

YES△Repair short in the wire between the PCM (C12) and the throttle body.■

NO△Replace the throttle body (see page 11-372).■

82. Check for continuity between PCM connector terminal A25 and body ground.

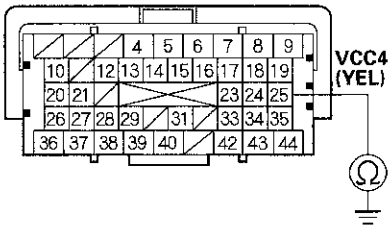

Terminal side of female terminals

Is there continuity?

YES△Go to step 83.

NO△Go to step 84.

83. Continue to check for continuity between PCM connector terminal A25 and body ground, while disconnecting the APP sensor 6P connector.

Is there continuity?

YES△Repair short in the wire between the PCM (A25) and the APP sensor.■

NO△Replace the accelerator pedal module; '06-08 models (see page 11-277), '09 model (see page 11-278).■

84. Check for continuity between PCM connector terminal A24 and body ground.

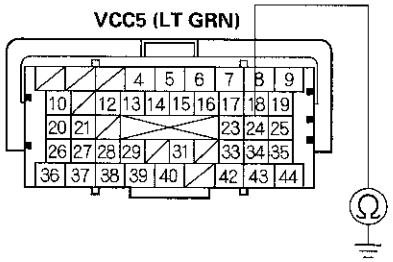

Terminal side of female terminals

Is there continuity?

YES△Go to step 85.

NO△Go to step 86.

85. Continue to check for continuity between PCM connector terminal A24 and body ground, while disconnecting the APP sensor 6P connector.

Is there continuity?

YES△Repair short in the wire between the PCM (A24) and the APP sensor.■

NO△Replace the accelerator pedal module; '06-08 models (see page 11-277), '09 model (see page 11-278).■

86. Check for continuity between PCM connector terminal A19 and body ground.

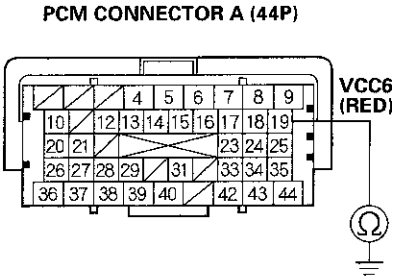

Terminal side of female terminals

Is there continuity?

YES△Go to step 87.

NO△Update the PCM if it does not have the latest software (see page 11-236), or substitute a known-good PCM (see page 11-7), then recheck. If the symptom/indication goes away with a known-good PCM, replace the original PCM (see page 11-238).■

87. Continue to check for continuity between PCM connector terminal A19 and body ground, while disconnecting these parts, one at a time:

- A/C pressure sensor 3P connector
- FTP sensor 3P connector

Does continuity go away when one of the above parts is disconnected?

YES△Replace the part that caused an open when it was disconnected.■

NO△Repair short in the wire between the PCM (A19) and the A/C pressure sensor or the FTP sensor.■

Injector Replacement

1. Relieve the fuel pressure; '06 model (see page 11-345), '07-09 models (see page 11-347).
2. Remove the intake air resonator (see page 11-371).
3. Remove the air cleaner (see page 11-370).
4. Remove the nut (A) and bolt (B).

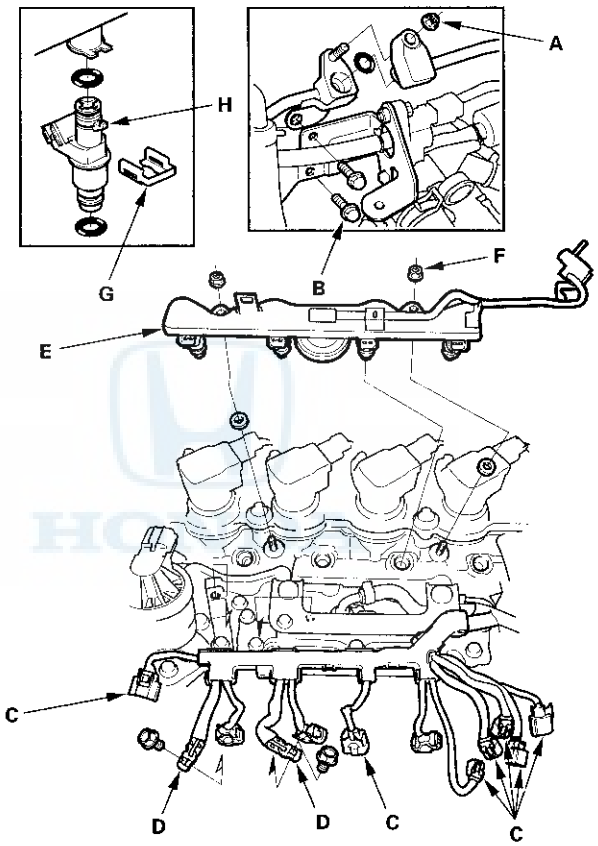

5. Disconnect the connectors (C) from the injectors, the intake side ignition coils, the EGR valve, the rocker arm oil control valve, the rocker arm oil pressure sensor, the MAP sensor, and the rocker arm oil pressure switch.
6. Remove the ground terminals (D).
7. Disconnect the hoses from the fuel rail (E).
8. Remove the fuel rail mounting nuts (F) from the fuel rail, then remove the injectors and fuel rail together.
9. Remove the injector clips (G) from the injectors (H).
10. Remove the injectors from the fuel rail.

11. Coat the new O-rings (A) with clean engine oil, and insert the injectors (B) into the fuel rail (C).

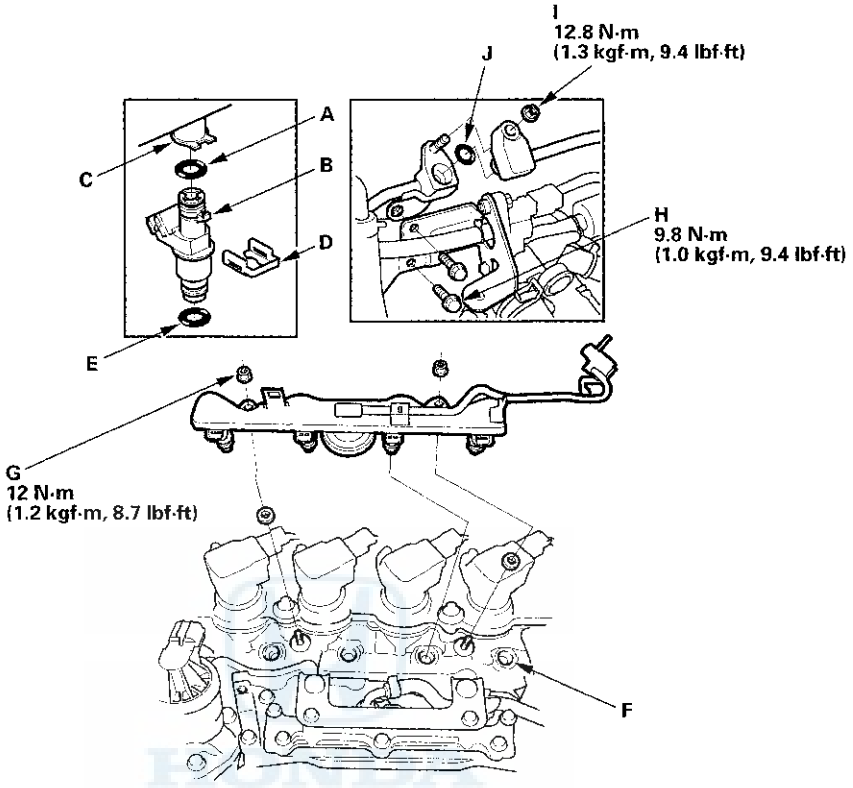

12. Install the injector clips (D).

13. Coat the injector O-rings (E) with clean engine oil.

14. Install the injectors into the injector base (F).

15. Install the fuel rail mounting nuts (G) and the bolt (H).

16. Install the nut (I) with a new O-ring (J).

17. Reconnect the fuel hoses.

18. Connect the ground terminal.

19. Connect the connectors on the injectors, the intake side ignition coils, the EGR valve, the rocker arm oil control valve, the rocker arm oil pressure sensor, the MAP sensor, and the rocker arm oil pressure switch.

20. Install the air cleaner (see page 11-370).

21. Install the intake air resonator (see page 11-371).

22. Turn the ignition switch to ON (II), but do not operate the starter. After the fuel pump runs for about 2 seconds, the fuel pressure in the fuel line rises. Repeat this two or three times, then check for fuel leakage.

A/F Sensor Replacement

Special Tools Required
O2 sensor wrench, Snap-on YA8875 or SWR2, or equivalent, commercially available

1. Remove the cowl cover and the under-cowl panel (see page 20-140).
2. Disconnect the A/F sensor 4P connector (A), then remove the A/F sensor (B).

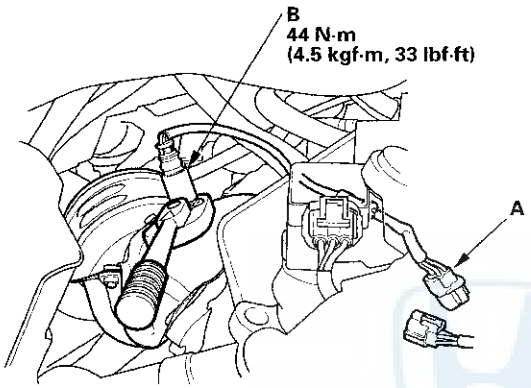

3. Install the parts in the reverse order of removal.

Secondary HO2S Replacement

Special Tools Required
O2 sensor wrench, Snap-on YA8875 or SWR2, or equivalent, commercially available

1. Disconnect the secondary HO2S 4P connector (A), then remove the secondary HO2S (B).

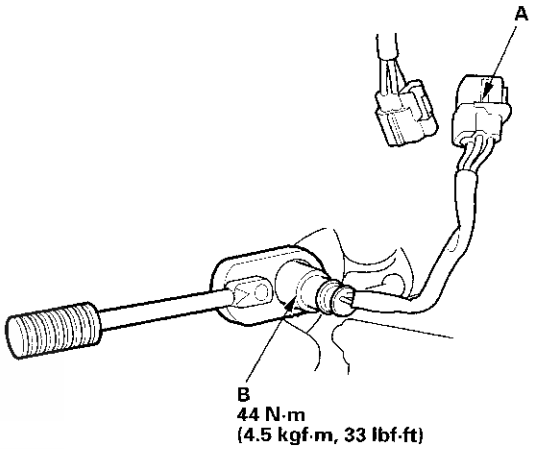

2. Install the parts in the reverse order of removal.

CKP Sensor Replacement

1. Disconnect the CKP 3P connector.
2. Remove the CKP sensor (A).

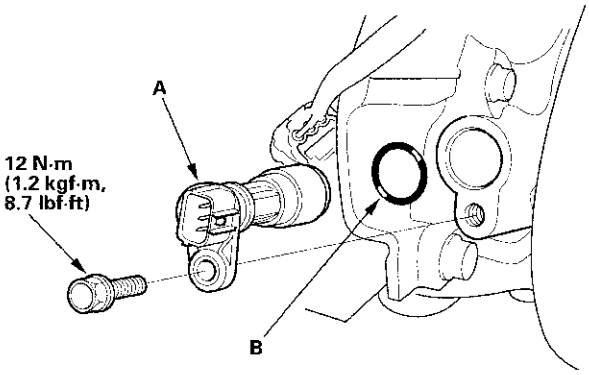

3. Install the parts in the reverse order of removal with a new O-ring (B).

CMP Sensor Replacement

1. Remove the air cleaner (see page 11-370).
2. Disconnect the CMP sensor 3P connector (A).

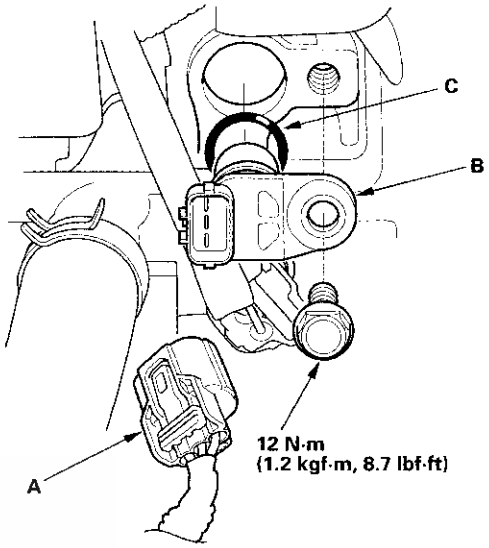

3. Remove the CMP sensor (B).
4. Install the parts in the reverse order of removal with a new O-ring (C).

HONDA

MAP Sensor Replacement

1. Disconnect the MAP sensor 3P connector (A).

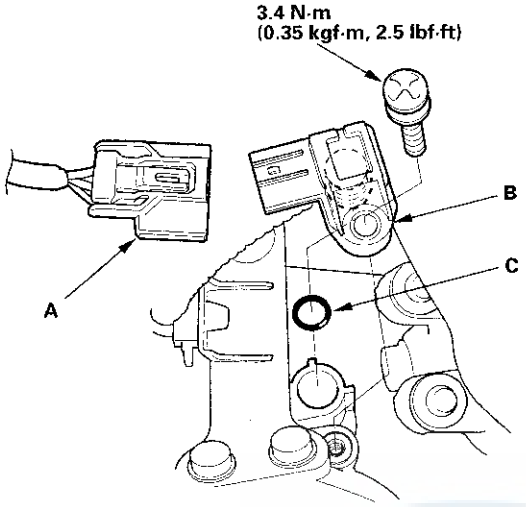

2. Remove the MAP sensor (B).
3. Install the parts in the reverse order of removal with a new O-ring (C).

MAF Sensor/IAT Sensor Replacement

1. Disconnect the MAF sensor/IAT sensor 5P connector (A).

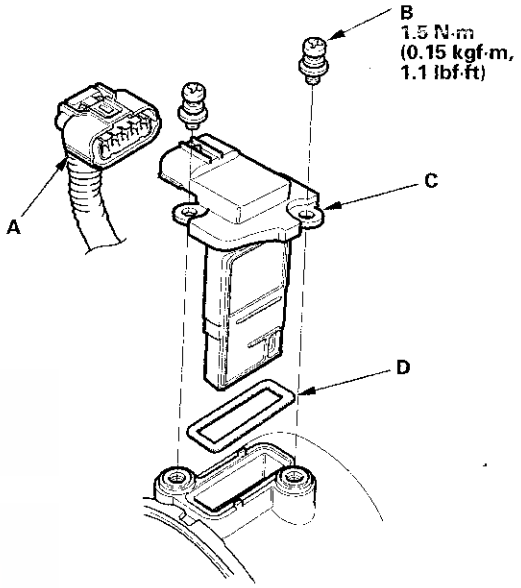

2. Remove the bolts (B).
3. Remove the MAF sensor/IAT sensor (C).
4. Install the parts in the reverse order of removal with a new O-ring (D).

ECT Sensor 1 Replacement

1. Drain the engine coolant (see page 10-6).
2. Remove the air cleaner (see page 11-370).
3. Disconnect the ECT sensor 1 2P connector (A).

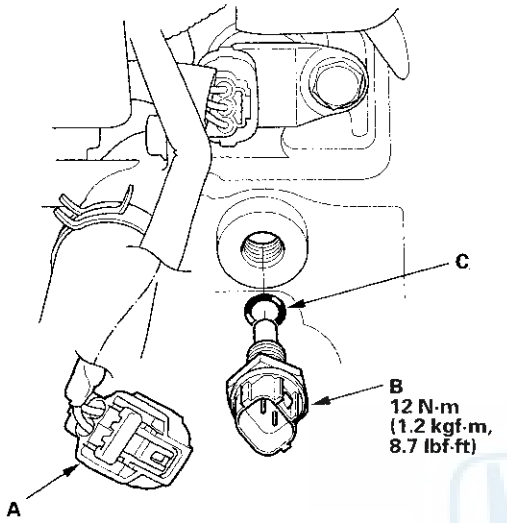

4. Remove ECT sensor 1 (B).
5. Install the parts in the reverse order of removal with a new O-ring (C), then refill the radiator with engine coolant (see page 10-6).

ECT Sensor 2 Replacement

1. Drain the engine coolant (see page 10-6).
2. Remove the splash shield.
3. Disconnect the ECT sensor 2 2P connector (A).

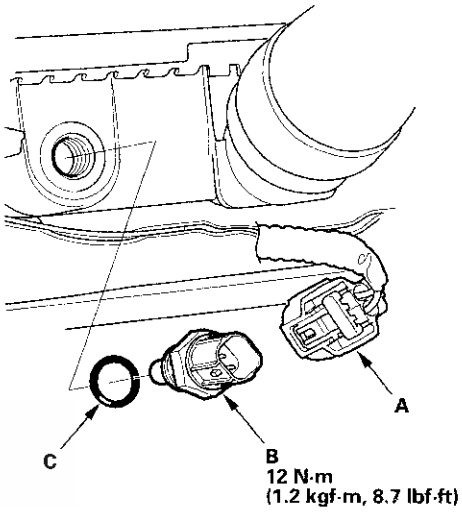

4. Remove ECT sensor 2 (B).
5. Install the parts in the reverse order of removal with a new O-ring (C), then refill the radiator with engine coolant (see page 10-6).
6. Install the splash shield.

Knock Sensor Replacement

1. Remove the intake manifold (see page 9-2).
2. Disconnect the knock sensor 1P connector (A).

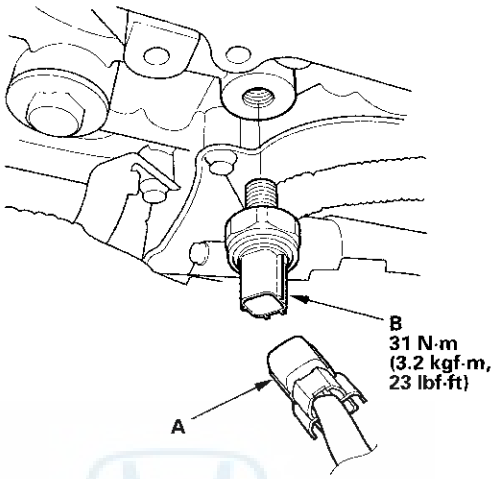

3. Remove the knock sensor (B).
4. Install the parts in the reverse order of removal.

ELD Replacement

1. Remove the PCM (see page 11-238).

2. Remove the under-hood fuse/relay box (see page 22-59).

3. Remove the screw (A).

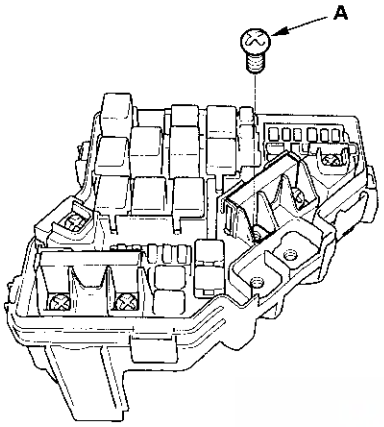

4. Turn the housing over, then remove the screw (A).

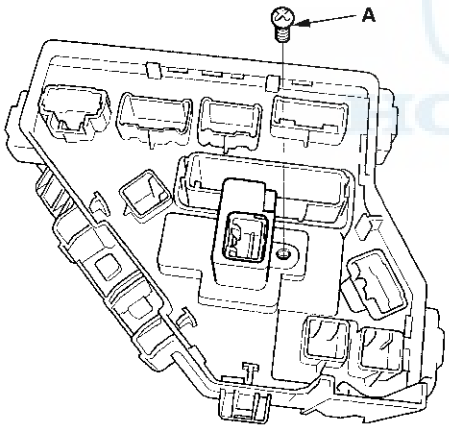

5. Turn the housing over again. Using two flat-tip screwdrivers, release the tabs (A), and pry up the fuse/relay box base (B) from the fuse/relay box housing (C).

   NOTE: Make sure the terminals (D) are not bent or damaged.

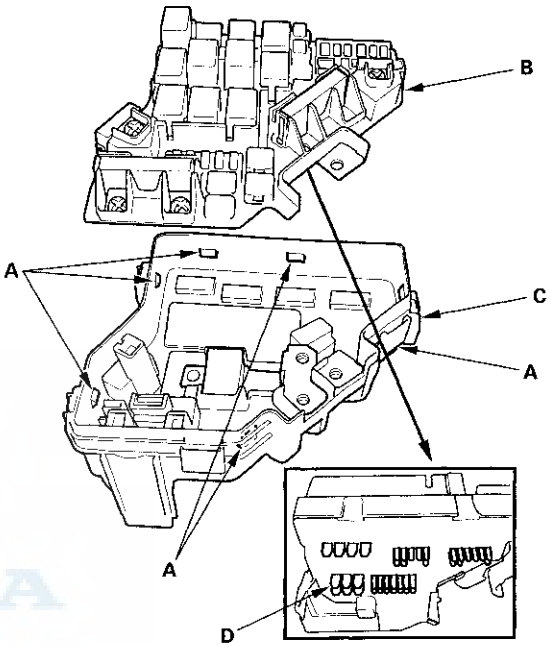

6. Remove the ELD (A).

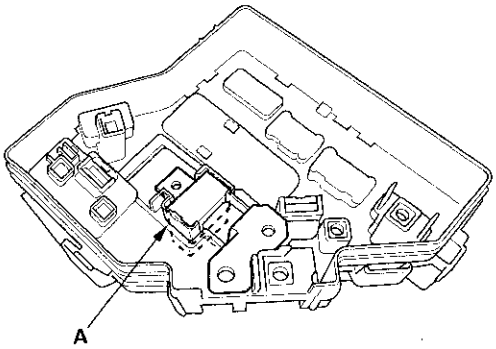

7. Install the parts in the reverse order of removal.

PCM Update

Special Tools Required
- Honda diagnostic system (HDS) tablet tester
- Honda interface module (HIM) and an iN workstation with the latest HDS software version
- HDS pocket tester
- GNA600 and an iN workstation with the latest HDS software version

Any one of the above updating tools can be used.

NOTE:
- Make sure the HDS/iN workstation has the latest HDS software version.
- Before you update the PCM, make sure the battery in the vehicle is fully charged, and connect a jumper battery (not a battery charger) to maintain system voltage.
- Never turn the ignition switch to ACC (I) or to LOCK (0) during the update. If there is a problem with the update, leave the ignition switch to ON.
- To prevent PCM damage, do not operate anything electrical (headlights, audio system, brakes, A/C, power windows, door locks, etc.) during the update.
- To ensure the latest program is installed, do a PCM update whenever the PCM is substituted or replaced.
- You cannot update a PCM with a program it already has. It will only accept a new program.
- High temperature in the engine compartment might cause the PCM to become too hot to run the update. If the engine was running before this procedure, open the hood, and cool the engine compartment.
- If you need to diagnose the Honda interface module (HIM) because the HIM's red (#3) light came on or was flashing during the update, leave the ignition switch in ON (II) when you disconnect the HIM from the data link connector (DLC). This will prevent PCM damage.

1. Turn the ignition switch to ON (II), but do not start the engine.

2. Connect the HDS to the data link connector (DLC) (A) located under the driver's side of the dashboard.

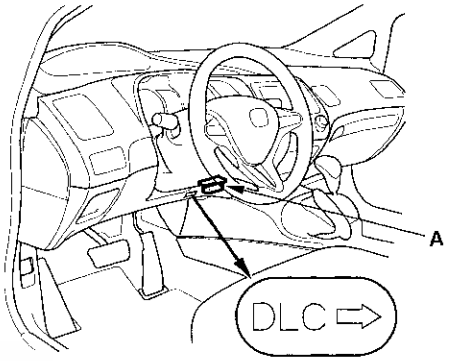

3. Make sure the HDS communicates with the PCM and other vehicle systems. If it doesn't, go to the DLC circuit troubleshooting (see page 11-213). If you are returning from the DLC circuit troubleshooting, skip steps 4 and 5, and clean the throttle body after updating the PCM (see page 11-370).

4. Select the INSPECTION MENU with the HDS.

5. Select the ETCS TEST, then select the TP POSITION CHECK, and follow the screen prompts with the HDS.

   NOTE: If the TP POSITION CHECK indicates FAILED, continue this procedure.

6. Exit the HDS diagnostic system. Select the update mode, and follow the screen prompts to update the PCM.

7. If the software in the PCM is the latest, disconnect the HDS/HIM from the DLC, and go back to the procedure that you were doing. If the software in the PCM is not the latest, follow the instructions on the screen. If prompted to choose the PGM-FI system or the A/T system, make sure you update both.

   NOTE: If the PCM update system requires you to cool the PCM, follow the instructions on screen. If you have a problem during the update (programming takes over 15 minutes, status bar goes over 100 %, D or immobilizer indicator flashes, HDS tablet freezes, etc.), follow these steps to minimize the chance of damaging the PCM:
   - Leave the ignition switch in ON (II).
   - Connect a jumper battery (do not connect a battery charger).
   - Shut down the HDS.
   - Disconnect the HDS from the DLC.
   - Reboot the HDS.
   - Reconnect the HDS to the DLC, and do the update again.

8. If the TP POSITION CHECK failed in step 5, clean the throttle body (see page 11-370).

9. Do the PCM idle learn procedure (see page 11-333).

10. Do the CKP pattern clear/CKP pattern learn procedure (see page 11-4).

11. Do the start clutch pressure control calibration procedure (see page 14-172).

PCM Replacement

Special Tools Required
- Honda diagnostic system (HDS) tablet tester
- Honda interface module (HIM) and an iN workstation with the latest HDS software version
- HDS pocket tester
- GNA600 and an iN workstation with the latest HDS software version

Any one of the above updating tools can be used.

NOTE:
- Make sure the HDS is loaded with the latest software version.
- If you are replacing the PCM after substituting a known-good PCM, reinstall the original PCM, then do this procedure.
- During the procedure, is any READ DATA, WRITE DATA, or other data checks fail, note the failure, then continue.

1. Connect the HDS to the data link connector (DLC) (A) located under the driver's side of the dashboard.

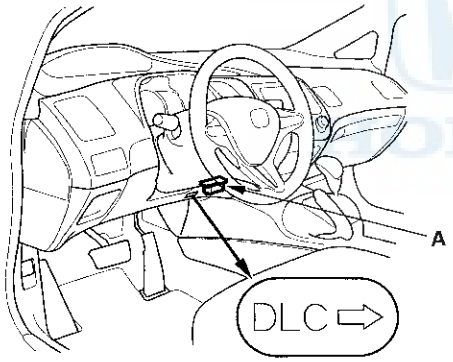

2. Turn the ignition switch to ON (II).

3. Make sure the HDS communicates with the PCM and other vehicle systems. If it doesn't, go to the DLC circuit troubleshooting (see page 11-213). If you are returning from DLC circuit troubleshooting, skip steps 4 through 7, 20 through 25, and do this after replacing the PCM:

   - Replace the engine oil (see page 8-10) and the engine oil filter (see page 8-11).
   - Clean the throttle body (see page 11-370).

4. Select the PGM-FI system with the HDS.

5. Select the INSPECTION MENU with the HDS.

6. Select the ETCS TEST, then select the TP POSITION CHECK, and follow the screen prompts.

   NOTE: If the TP POSITION CHECK indicates FAILED, continue with this procedure.

7. Select the REPLACE PCM MENU, then select READ DATA and follow the screen prompts.

   NOTE:
   - Doing this step copies (READS) the engine oil life data from the original PCM so you can later download (WRITES) it into the new PCM.
   - If READ DATA indicates FAILED, continue with this procedure.

8. Turn the ignition switch to LOCK (0).

9. Jump the SCS line with the HDS.

10. Do the battery removal procedure (see page 22-63).

11. Remove the cover (A).

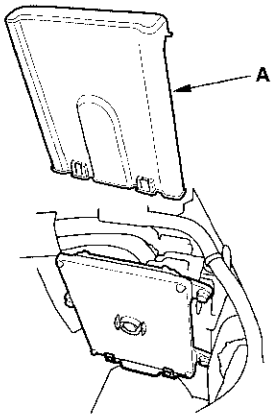

12. Remove the bolts (D), then remove the PCM (E).

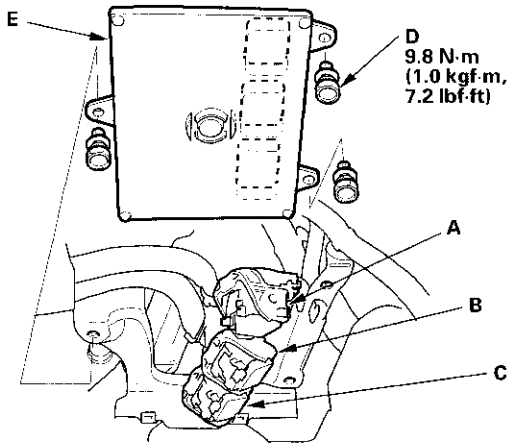

13. Disconnect PCM connectors A, B, and C.

    NOTE: PCM connectors A, B, and C have symbols (A=□, B=△, C=○) embossed on them for identification.

14. Install the parts in the reverse order of removal.

15. Do the battery installation procedure (see page 22-63).

16. Turn the ignition switch to ON (II).

17. Manually input the VIN to the PCM with the HDS.

    NOTE: DTC P0630 VIN Not Programmed or Mismatch may be stored because the VIN has not been programmed into the PCM; ignore it, and continue this procedure.

18. If the READ DATA (engine oil life) failed in step 7, go to step 23. Otherwise, go to step 19.

19. Select the PGM-FI system with the HDS.

20. Select the REPLACE PCM MENU, then select WRITE DATA and follow the screen prompts.

    NOTE: If the WRITE DATA indicates FAILED, continue with this procedure.

21. Select IMMOBI system with the HDS.

22. Enter the immobilizer code that you got from the iN, and use the PCM replacement procedure in the HDS; it allows you to start the engine.

23. If the TP POSITION CHECK failed in step 6 clean the throttle body (see page 11-370), then go to step 24.

24. If the READ DATA failed in step 8 or the WRITE DATA failed in step 20, replace the engine oil (see page 8-10) and engine oil filter (see page 8-11), then go to step 25.

25. Select PGM-FI system and reset the PCM with the HDS.

26. Update the PCM if it does not have the latest software (see page 11-236).

27. Do the PCM idle learn procedure (see page 11-333).

28. Do the CKP pattern learn procedure (see page 11-4).

Electronic Throttle Control System

Component Location Index

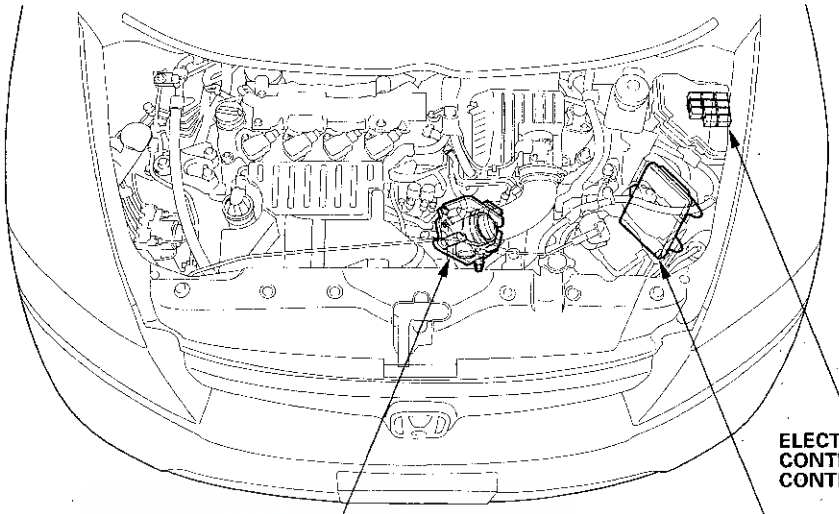

ELECTRONIC THROTTLE CONTROL SYSTEM (ETCS) CONTROL RELAY

THROTTLE ACTUATOR and THROTTLE POSITION (TP) SENSOR

POWERTRAIN CONTROL MODULE (PCM)
Update, page 11-236
Substitution, page 11-7
Replacement, page 11-238

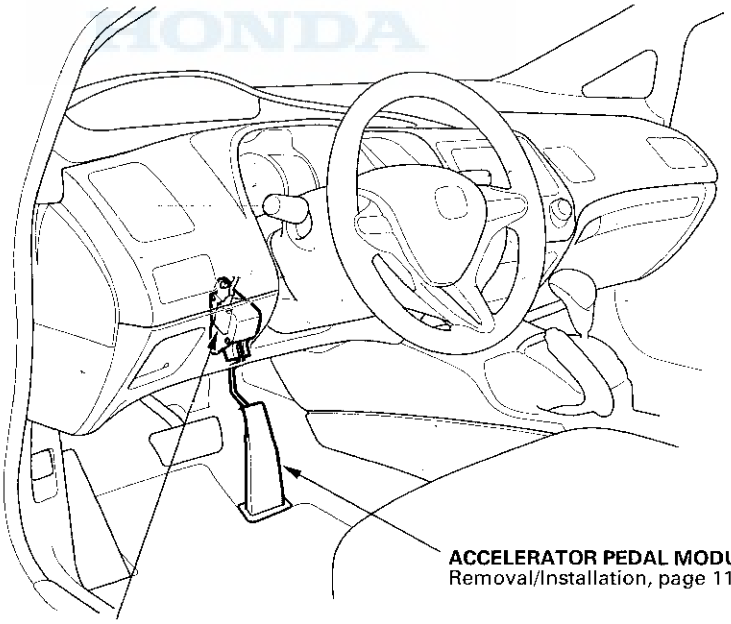

ACCELERATOR PEDAL MODULE
Removal/Installation, page 11-277

ACCELERATOR PEDAL POSITION (APP) SENSOR
Signal Inspection, page 11-277

DTC P0122: TP Sensor A Circuit Low Voltage

NOTE: Before you troubleshoot, record all freeze data and any on-board snapshot, and review the general troubleshooting information (see page 11-3).

1. Turn the ignition switch to ON (II).
2. Clear the DTC with the HDS.
3. Check TP SENSOR A in the DATA LIST with the HDS.

   Is there about 0.3 V or less?

   YES△Go to step 4.

   NO△Intermittent failure, the system is OK at this time. Check for poor connections or loose terminals at the throttle body and the PCM.■

4. Check for Temporary DTCs or DTCs with the HDS.

   Are DTC P0122 and P0222 indicated at the same time?

   YES△Go to step 10.

   NO△Go to step 5.

5. Turn the ignition switch to LOCK (0).
6. Disconnect the throttle body 6P connector.
7. Jump the SCS line with the HDS.
8. Disconnect PCM connector C (44P).
9. Check for continuity between throttle body 6P connector terminal No. 1 and body ground.

THROTTLE BODY 6P CONNECTOR

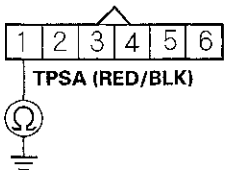

Wire side of female terminals

Is there continuity?

YES△Repair short in the wire between the throttle body and the PCM (C20), then go to step 18.

NO△Go to step 23.

10. Measure the voltage between throttle body 6P connector terminal No. 2 and body ground.

THROTTLE BODY 6P CONNECTOR

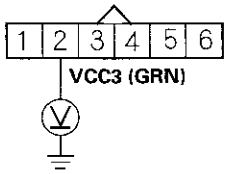

Wire side of female terminals

Is there about 5 V?

YES△Go to step 16.

NO△Go to step 11.

(cont'd)

DTC Troubleshooting (cont'd)

11. Turn the ignition switch to LOCK (0).

12. Jump the SCS line with the HDS.

13. Disconnect PCM connector C (44P).

14. Disconnect the throttle body 6P connector.

15. Check for continuity between PCM connector terminal C12 and throttle body 6P connector terminal No. 2.

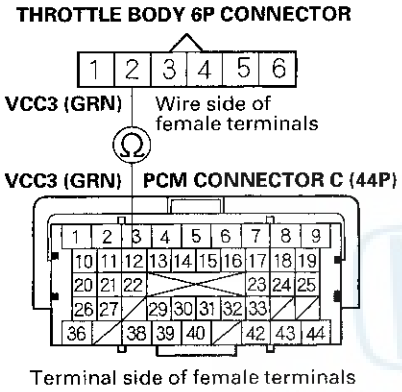

Is there continuity?

YES△Go to step 23.

NO△Repair open in the wire between the throttle body and the PCM (C12), then go to step 18.

16. Turn the ignition switch to LOCK (0).

17. Replace the throttle body (see page 11-372).

18. Reconnect all connectors.

19. Turn the ignition switch to ON (II).

20. Reset the PCM with the HDS.

21. Do the PCM idle learn procedure (see page 11-333).

22. Check for Temporary DTCs or DTCs with the HDS.

Is DTC P0122 indicated?

YES△Check for poor connections or loose terminals at the throttle body and the PCM, then go to step 1.

NO△Troubleshooting is complete. If any other Temporary DTCs or DTCs are indicated, go to the indicated DTC's troubleshooting.■

23. Reconnect all connectors.

24. Update the PCM if it does not have the latest software (see page 11-236), or substitute a known-good PCM (see page 11-7).

25. Check for Temporary DTCs or DTCs with the HDS.

Is DTC P0122 indicated?

YES△Check for poor connections or loose terminals at the throttle body and the PCM. If the PCM was updated, substitute a known-good PCM (see page 11-7), then recheck. If the PCM was substituted, go to step 1.

NO△If the PCM was updated, troubleshooting is complete. If the PCM was substituted, replace the original PCM (see page 11-238). If any other Temporary DTCs or DTCs are indicated, go to the indicated DTC's troubleshooting.■

DTC P0123: TP Sensor A Circuit High Voltage

NOTE: Before you troubleshoot, record all freeze data and any on-board snapshot, and review the general troubleshooting information (see page 11-3).

1. Turn the ignition switch to ON (II).
2. Clear the DTC with the HDS.
3. Check TP SENSOR A in the DATA LIST with the HDS.

   Is there about 4.8 V or more?

   YES△Go to step 4.

   NO△Intermittent failure, the system is OK at this time. Check for poor connections or loose terminals at the throttle body and the PCM.■

4. Check for Temporary DTCs or DTCs with the HDS.

   Are DTC P0123 and P0223 indicated at the same time?

   YES△Go to step 13.

   NO△Go to step 5.

5. Turn the ignition switch to LOCK (0).
6. Disconnect the throttle body 6P connector.
7. Turn the ignition switch to ON (II).
8. Measure the voltage between throttle body 6P connector terminal No. 1 and body ground.

THROTTLE BODY 6P CONNECTOR

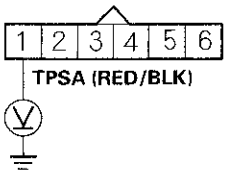

Wire side of female terminals

Is there about 5 V?

YES△Go to step 18.

NO△Go to step 9.

9. Turn the ignition switch to LOCK (0).
10. Jump the SCS line with the HDS.
11. Disconnect PCM connector C (44P).

(cont'd)

DTC Troubleshooting (cont'd)

12. Check for continuity between PCM connector terminal C20 and throttle body 6P connector terminal No. 1.

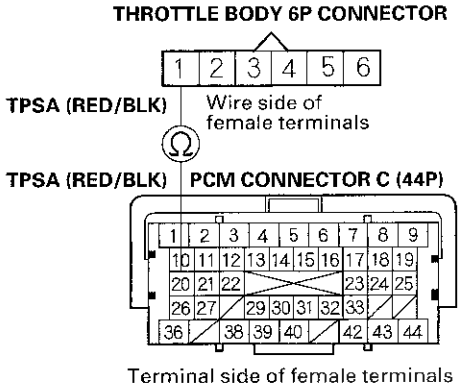

Is there continuity?

YES△Go to step 25.

NO△Repair open in the wire between the throttle body and the PCM (C20), then go to step 20.

13. Turn the ignition switch to LOCK (0).

14. Disconnect the throttle body 6P connector.

15. Jump the SCS line with the HDS.

16. Disconnect PCM connector C (44P).

17. Check for continuity between PCM connector terminal C39 and throttle body 6P connector terminal No. 4.

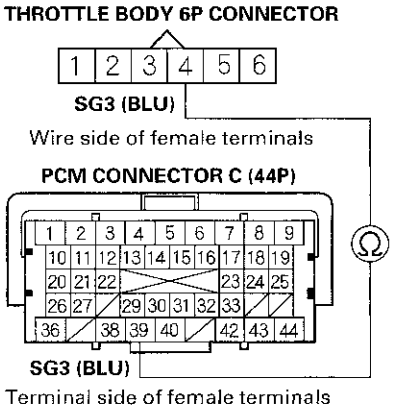

Is there continuity?

YES△Go to step 25.

NO△Repair open in the wire between the throttle body and the PCM (C39), then go to step 20.

18. Turn the ignition switch to LOCK (0).

19. Replace the throttle body (see page 11-372).

20. Reconnect all connectors.

21. Turn the ignition switch to ON (II).

22. Reset the PCM with the HDS.

23. Do the PCM idle learn procedure (see page 11-333).

24. Check for Temporary DTCs or DTCs with the HDS.

    Is DTC P0123 indicated?

    YES△Check for poor connections or loose terminals at the throttle body and the PCM, then go to step 1.

    NO△Troubleshooting is complete. If any other Temporary DTCs or DTCs are indicated, go to the indicated DTC's troubleshooting.■

25. Reconnect all connectors.

26. Update the PCM if it does not have the latest software (see page 11-236), or substitute a known-good PCM (see page 11-7).

27. Check for Temporary DTCs or DTCs with the HDS.

    Is DTC P0123 indicated?

    YES△Check for poor connections or loose terminals at the throttle body and the PCM. If the PCM was updated, substitute a known-good PCM (see page 11-7), then recheck. If the PCM was substituted, go to step 1.

    NO△If the PCM was updated, troubleshooting is complete. If the PCM was substituted, replace the original PCM (see page 11-238). If any other Temporary DTCs or DTCs are indicated, go to the indicated DTC's troubleshooting.■

DTC P0222: TP Sensor B Circuit Low Voltage

NOTE: Before you troubleshoot, record all freeze data and any on-board snapshot, and review the general troubleshooting information (see page 11-3).

1. Turn the ignition switch to ON (II).

2. Clear the DTC with the HDS.

3. Check TP SENSOR B in the DATA LIST with the HDS.

   Is there about 0.3 V or less?

   YES△Go to step 4.

   NO△Intermittent failure, the system is OK at this time. Check for poor connections or loose terminals at the throttle body and the PCM.■

4. Check for Temporary DTCs or DTCs with the HDS.

   Are DTC P0122 and P0222 indicated at the same time?

   YES△Go to step 10.

   NO△Go to step 5.

(cont'd)

DTC Troubleshooting (cont'd)

5. Turn the ignition switch to LOCK (0).
6. Disconnect the throttle body 6P connector.
7. Jump the SCS line with the HDS.
8. Disconnect PCM connector C (44P).
9. Check for continuity between throttle body 6P connector terminal No. 3 and body ground.

THROTTLE BODY 6P CONNECTOR

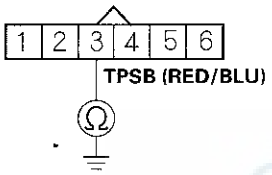

Wire side of female terminals

Is there continuity?

YES△Repair short in the wire between the throttle body and the PCM (C21), then go to step 18.

NO△Go to step 23.

10. Measure the voltage between throttle body 6P connector terminal No. 2 and body ground.

THROTTLE BODY 6P CONNECTOR

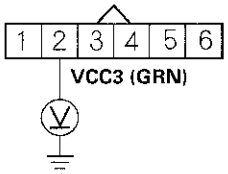

Wire side of female terminals

Is there about 5 V?

YES△Go to step 16.

NO△Go to step 11.

11. Turn the ignition switch to LOCK (0).
12. Jump the SCS line with the HDS.
13. Disconnect PCM connector C (44P).
14. Disconnect the throttle body 6P connector.

15. Check for continuity between PCM connector terminal C12 and throttle body 6P connector terminal No. 2.

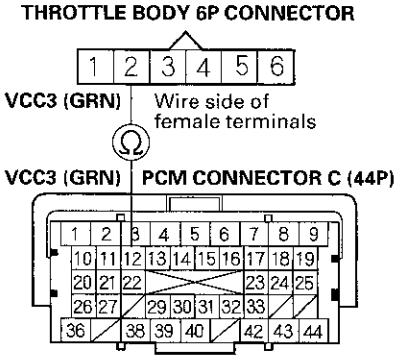

Terminal side of female terminals

Is there continuity?

YES△Go to step 23.

NO△Repair open in the wire between the throttle body and the PCM (C12), then go to step 18.

16. Turn the ignition switch to LOCK (0).

17. Replace the throttle body (see page 11-372).

18. Reconnect all connectors.

19. Turn the ignition switch to ON (II).

20. Reset the PCM with the HDS.

21. Do the PCM idle learn procedure (see page 11-333).

22. Check for Temporary DTCs or DTCs with the HDS.

    Is DTC P0222 indicated?

    YES△Check for poor connections or loose terminals at the throttle body and the PCM, then go to step 1.

    NO△Troubleshooting is complete. If any other Temporary DTCs or DTCs are indicated, go to the indicated DTC's troubleshooting.■

23. Reconnect all connectors.

24. Update the PCM if it does not have the latest software (see page 11-236), or substitute a known-good PCM (see page 11-7).

25. Check for Temporary DTCs or DTCs with the HDS.

    Is DTC P0222 indicated?

    YES△Check for poor connections or loose terminals at the throttle body and the PCM. If the PCM was updated, substitute a known-good PCM (see page 11-7), then recheck. If the PCM was substituted, go to step 1.

    NO△If the PCM was updated, troubleshooting is complete. If the PCM was substituted, replace the original PCM (see page 11-238). If any other Temporary DTCs or DTCs are indicated, go to the indicated DTC's troubleshooting.■

DTC Troubleshooting (cont'd)

DTC P0223: TP Sensor B Circuit High Voltage

NOTE: Before you troubleshoot, record all freeze data and any on-board snapshot, and review the general troubleshooting information (see page 11-3).

1. Turn the ignition switch to ON (II).
2. Clear the DTC with the HDS.
3. Check TP SENSOR B in the DATA LIST with the HDS.

   Is there about 4.8 V or more?

   YES△Go to step 4.

   NO△Intermittent failure, the system is OK at this time. Check for poor connections or loose terminals at the throttle body and the PCM. ■

4. Check for Temporary DTCs or DTCs with the HDS.

   Are DTC P0123 and P0223 indicated at the same time?

   YES△Go to step 13.

   NO△Go to step 5.

5. Turn the ignition switch to LOCK (0).
6. Disconnect the throttle body 6P connector.
7. Turn the ignition switch to ON (II).
8. Measure the voltage between throttle body 6P connector terminal No. 3 and body ground.

THROTTLE BODY 6P CONNECTOR

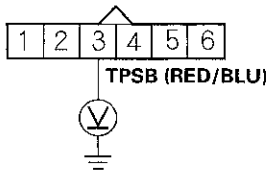

Wire side of female terminals

   Is there about 5 V?

   YES△Go to step 18.

   NO△Go to step 9.

9. Turn the ignition switch to LOCK (0).
10. Jump the SCS line with the HDS.
11. Disconnect PCM connector C (44P).

12. Check for continuity between PCM connector terminal C21 and throttle body 6P connector terminal No. 3.

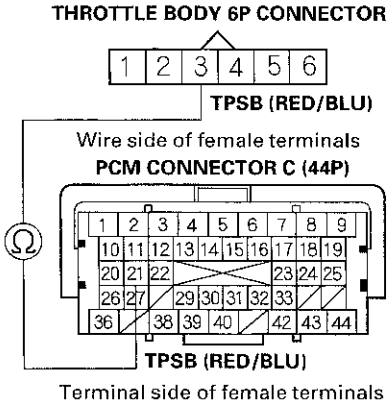

Is there continuity?

YES△Go to step 25.

NO△Repair open in the wire between the throttle body and the PCM (C21), then go to step 20.

13. Turn the ignition switch to LOCK (0).

14. Disconnect the throttle body 6P connector.

15. Jump the SCS line with the HDS.

16. Disconnect PCM connector C (44P).

17. Check for continuity between PCM connector terminal C39 and throttle body 6P connector terminal No. 4.

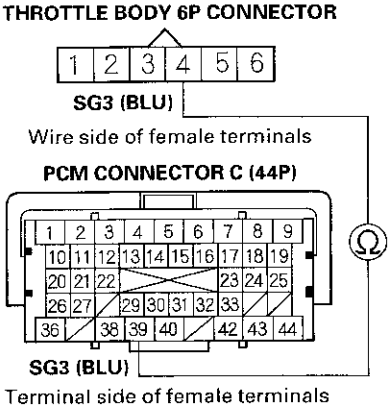

Is there continuity?

YES△Go to step 25.

NO△Repair open in the wire between the throttle body and the PCM (C39), then go to step 20.

(cont'd)

DTC Troubleshooting (cont'd)

18. Turn the ignition switch to LOCK (0).

19. Replace the throttle body (see page 11-372).

20. Reconnect all connectors.

21. Turn the ignition switch to ON (II).

22. Reset the PCM with the HDS.

23. Do the PCM idle learn procedure (see page 11-333).

24. Check for Temporary DTCs or DTCs with the HDS.

    Is DTC P0223 indicated?

    YES△Check for poor connections or loose terminals at the throttle body and the PCM, then go to step 1.

    NO△Troubleshooting is complete. If any other Temporary DTCs or DTCs are indicated, go to the indicated DTC's troubleshooting.■

25. Reconnect all connectors.

26. Update the PCM if it does not have the latest software (see page 11-236), or substitute a known-good PCM (see page 11-7).

27. Check for Temporary DTCs or DTCs with the HDS.

    Is DTC P0223 indicated?

    YES△Check for poor connections or loose terminals at the throttle body and the PCM. If the PCM was updated, substitute a known-good PCM (see page 11-7), then recheck. If the PCM was substituted, go to step 1.

    NO△If the PCM was updated, troubleshooting is complete. If the PCM was substituted, replace the original PCM (see page 11-238). If any other Temporary DTCs or DTCs are indicated, go to the indicated DTC's troubleshooting.■

DTC P1658: ETCS Control Relay ON Malfunction

NOTE: Before you troubleshoot, record all freeze data and any on-board snapshot, and review the general troubleshooting information (see page 11-3).

1. Turn the ignition switch to ON (II).

2. Do the ETCS TEST in the INSPECTION MENU with the HDS.

   Is the RELAY circuit OK?

   YES△Intermittent failure, the system is OK at this time. Check for poor connections or loose terminals at the ETCS control relay and the PCM.■

   NO△Go to step 3.

3. Turn the ignition switch to LOCK (0).

4. Remove the ETCS control relay (F) from the under-hood fuse/relay box.

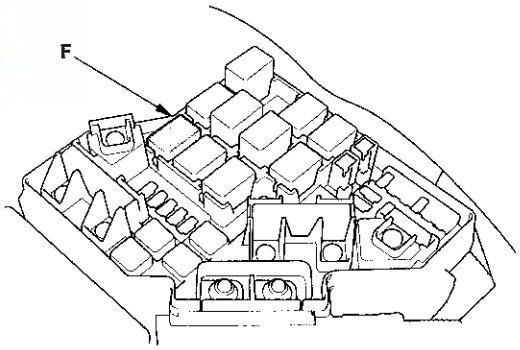

5. Test the ETCS control relay (see page 22-64).

   Is the ETCS control relay OK?

   YES△Go to step 6.

   NO△Replace the ETCS control relay, then go to step 13.

6. Jump the SCS line with the HDS.

7. Disconnect PCM connector A (44P).

8. Check for continuity between PCM connector terminal A20 and body ground.

PCM CONNECTOR A (44P)

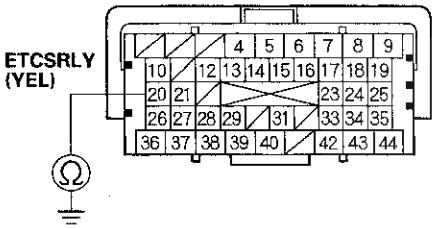

Terminal side of female terminals

Is there continuity?

YES△Repair short in the wire between the PCM (A20) and the ETCS control relay, then go to step 13.

NO△Go to step 9.

9. Disconnect PCM connector C (44P).

10. Turn the ignition switch to ON (II).

11. Measure the voltage between PCM connector terminal C1 and body ground.

PCM CONNECTOR C (44P)

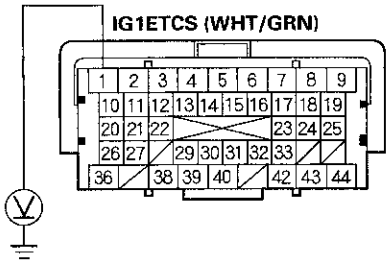

Terminal side of female terminals

Is there battery voltage?

YES△Repair short to power in the wire between the PCM (C1) and the ETCS control relay, then go to step 12.

NO△Go to step 18.

HONDA

(cont'd)

DTC Troubleshooting (cont'd)

12. Turn the ignition switch to LOCK (0).

13. Reconnect all connectors.

14. Turn the ignition switch to ON (II).

15. Reset the PCM with the HDS.

16. Do the PCM idle learn procedure (see page 11-333).

17. Check for Temporary DTCs or DTCs with the HDS.

    Is DTC P1658 indicated?

    YES△Check for poor connections or loose terminals at the ETCS control relay and the PCM, then go to step 1.

    NO△Troubleshooting is complete. If any other Temporary DTCs or DTCs are indicated, go to the indicated DTC's troubleshooting. ■

18. Turn the ignition switch to LOCK (0).

19. Reconnect all connectors.

20. Update the PCM if it does not have the latest software (see page 11-236), or substitute a known-good PCM (see page 11-7).

21. Check for Temporary DTCs or DTCs with the HDS.

    Is DTC P1658 indicated?

    YES△Check for poor connections or loose terminals at the ETCS control relay and the PCM. If the PCM was updated, substitute a known-good PCM (see page 11-7), then recheck. If the PCM was substituted, go to step 1.

    NO△If the PCM was updated, troubleshooting is complete. If the PCM was substituted, replace the original PCM (see page 11-238). If any other Temporary DTCs or DTCs are indicated, go to the indicated DTC's troubleshooting. ■

DTC P1659: ETCS Control Relay OFF Malfunction

NOTE: Before you troubleshoot, record all freeze data and any on-board snapshot, and review the general troubleshooting information (see page 11-3).

1. Turn the ignition switch to ON (II).

2. Clear the DTC with the HDS.

3. Check for Temporary DTCs or DTCs with the HDS.

   Is DTC P1659 indicated?

   YES△Go to step 4.

   NO△Intermittent failure, the system is OK at this time. Check for poor connections or loose terminals at the ETCS control relay and the PCM. ■

4. Turn the ignition switch to LOCK (0).

5. Check the No. 21 DBW (THROTTLE ACTUATOR CONTROL) (15 A) fuse in the under-hood fuse/relay box.

   Is the fuse OK?

   YES△Go to step 6.

   NO△Go to step 17.

6. Remove the ETCS control relay (F) from the under-hood fuse/relay box.

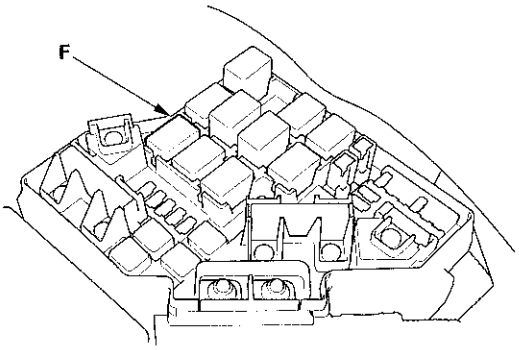

7. Test the ETCS control relay (see page 22-64).

   Is the ETCS control relay OK?

   YES△Go to step 8.

   NO△Replace the ETCS control relay, then go to step 23.

8. Turn the ignition switch to ON (II).

9. Measure the voltage between ETCS control relay 4P connector terminal No. 4 and body ground.

ETCS CONTROL RELAY 4P CONNECTOR

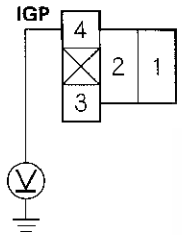

Terminal side of female terminals

   Is there battery voltage?

   YES△Go to step 10.

   NO△Replace the under-hood fuse/relay box (see page 22-59), then go to step 23.

10. Measure the voltage between ETCS control relay 4P connector terminal No. 1 and body ground.

ETCS CONTROL RELAY 4P CONNECTOR

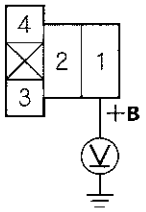

Terminal side of female terminals

   Is there battery voltage?

   YES△Go to step 11.

   NO△Replace the under-hood fuse/relay box (see page 22-59), then go to step 22.

11. Turn the ignition switch to LOCK (0).

12. Jump the SCS line with the HDS.

13. Disconnect PCM connector C (44P).

(cont'd)

DTC Troubleshooting (cont'd)

14. Check for continuity between ETCS control relay 4P connector terminal No. 2 and PCM connector terminal C1.

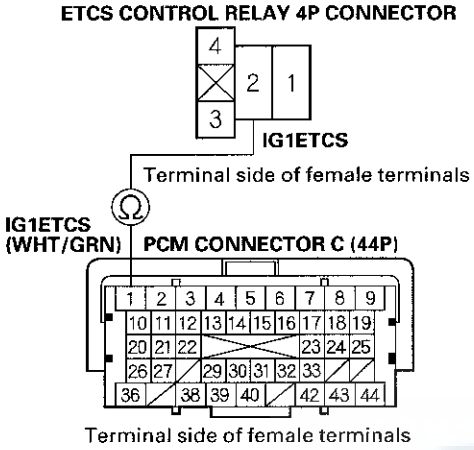

Is there continuity?

YES△Go to step 15.

NO△Repair open in the wire between the PCM (C1) and the ETCS control relay, then go to step 23.

15. Disconnect PCM connector A (44P).

16. Check for continuity between ETCS control relay 4P connector terminal No. 3 and PCM connector terminal A20.

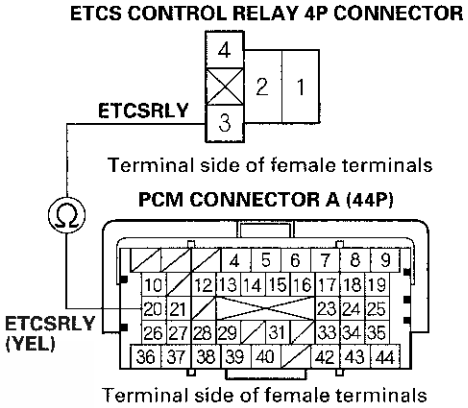

Is there continuity?

YES△Go to step 28.

NO△Repair open in the wire between the PCM (A20) and the ETCS control relay, then go to step 23.

17. Remove the ETCS control relay (F) from the under-hood fuse/relay box.

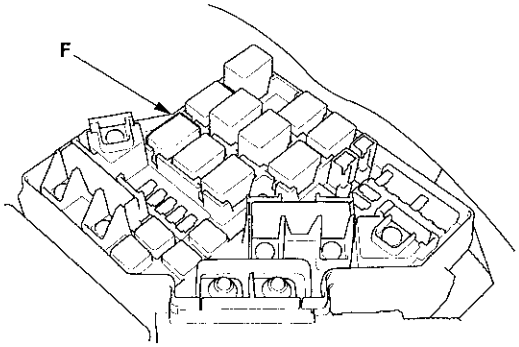

18. Jump the SCS line with the HDS.

19. Disconnect PCM connector C (44P).

20. Check for continuity between PCM connector terminal C1 and body ground.

PCM CONNECTOR C (44P)

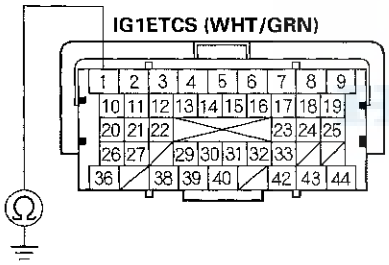

Terminal side of female terminals

Is there continuity?

YES△Repair short in the wire between the PCM (C1) and the ETCS control relay, then go to step 23.

NO△Go to step 21.

21. Check for continuity between ETCS control relay 4P connector terminal No. 1 and body ground.

ETCS CONTROL RELAY 4P CONNECTOR

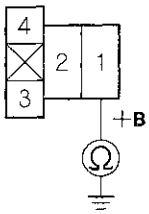

Terminal side of female terminals

Is there continuity?

YES△Replace the under-hood fuse/relay box (see page 22-59), then go to step 23.

NO△Go to step 28.

22. Turn the ignition switch to LOCK (0).

23. Reconnect all connectors.

24. Turn the ignition switch to ON (II).

25. Reset the PCM with the HDS.

26. Do the PCM idle learn procedure (see page 11-333).

27. Check for Temporary DTCs or DTCs with the HDS.

Is DTC P1659 indicated?

YES△Check for poor connections or loose terminals at the ETCS control relay and the PCM, then go to step 1.

NO△Troubleshooting is complete. If any other Temporary DTCs or DTCs are indicated, go to the indicated DTC's troubleshooting.■

(cont'd)

DTC Troubleshooting (cont'd)

28. Reconnect all connectors.

29. Update the PCM if it does not have the latest software (see page 11-236), or substitute a known-good PCM (see page 11-7).

30. Check for Temporary DTCs or DTCs with the HDS.

    Is DTC P1659 indicated?

    YES△Check for poor connections or loose terminals at the ETCS control relay and the PCM. If the PCM was updated, substitute a known-good PCM (see page 11-7), then recheck. If the PCM was substituted, go to step 1.

    NO△If the PCM was updated, troubleshooting is complete. If the PCM was substituted, replace the original PCM (see page 11-238). If any other Temporary DTCs or DTCs are indicated, go to the indicated DTC's troubleshooting.■

DTC P1683: Throttle Valve Default Position Spring Performance Problem

⚠CAUTION

Do not insert your fingers into the installed throttle body when you turn the ignition switch to ON (II) or while the ignition switch is ON (II). If you do, you will seriously injure your fingers if the throttle valve is activated.

NOTE: Before you troubleshoot, record all freeze data and any on-board snapshot, and review the general troubleshooting information (see page 11-3).

1. Turn the ignition switch to ON (II).

2. Clear the DTC with the HDS.

3. Start the engine. Hold the engine speed at 3,000 rpm without load (in P or N) until the radiator fan comes on, then let it idle.

4. Turn the ignition switch to LOCK (0), and wait 10 seconds.

5. Turn the ignition switch to ON (II).

6. Check for Temporary DTCs or DTCs with the HDS.

   Is DTC P1683 indicated?

   YES△Go to step 7.

   NO△Intermittent failure, the system is OK at this time. Check for poor connections or loose terminals at the throttle body and the PCM.■

7. Turn the ignition switch to LOCK (0).

8. Disconnect the intake air duct from the throttle body (see page 11-372).

9. Push the throttle valve closed as shown.

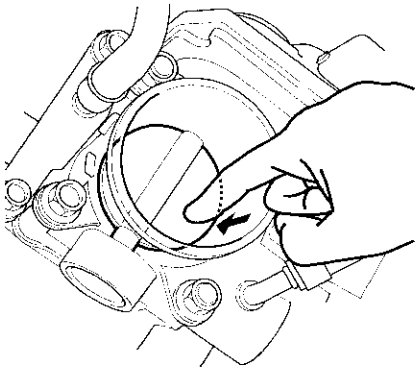

10. Release the throttle valve.

    Does the throttle valve return?

    YES△Clean the throttle body (see page 11-370), then go to step 12 and recheck. If DTC P1683 is indicated, go to step 11.

    NO△Go to step 11.

11. Replace the throttle body (see page 11-372).

12. Turn the ignition switch to ON (II).

13. Reset the PCM with the HDS.

14. Do the PCM idle learn procedure (see page 11-333).

15. Turn the ignition switch to LOCK (0), and wait 10 seconds.

16. Turn the ignition switch to ON (II).

17. Check for Temporary DTCs or DTCs with the HDS.

    Is DTC P1683 indicated?

    YES△If the throttle body was cleaned, go to step 11. If the throttle body was replaced, check for poor connections or loose terminals at the throttle body and the PCM, then go to step 1.

    NO△Troubleshooting is complete. If any other Temporary DTCs or DTCs are indicated, go to the indicated DTC's troubleshooting.■

DTC P1684: Throttle Valve Return Spring Performance Problem

⚠CAUTION

Do not insert your fingers into the installed throttle body when you turn the ignition switch to ON (II) or while the ignition switch is ON (II). If you do, you will seriously injure your fingers if the throttle valve is activated.

NOTE: Before you troubleshoot, record all freeze data and any on-board snapshot, and review the general troubleshooting information (see page 11-3).

1. Turn the ignition switch to ON (II).

2. Clear the DTC with the HDS.

3. Start the engine. Hold the engine speed at 3,000 rpm without load (in P or N) until the radiator fan comes on, then let it idle.

4. Turn the ignition switch to LOCK (0), and wait 10 seconds.

5. Turn the ignition switch to ON (II).

6. Check for Temporary DTCs or DTCs with the HDS.

   Is DTC P1684 indicated?

   YES△Go to step 7.

   NO△Intermittent failure, the system is OK at this time. Check for poor connections or loose terminals at the throttle body and the PCM.■

7. Turn the ignition switch to LOCK (0).

8. Disconnect the intake air duct from the throttle body (see page 11-372).

(cont'd)

DTC Troubleshooting (cont'd)

9. Push the throttle valve open as shown.

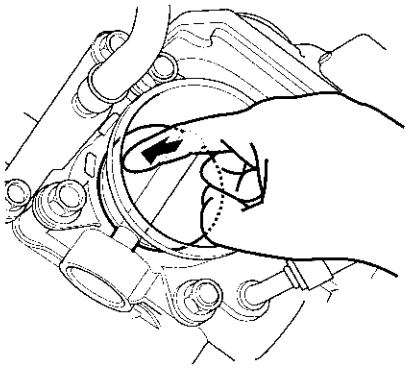

10. Release the throttle valve.

    Does the throttle valve return?

    YES△Clean the throttle body (see page 11-370), then go to step 12 and recheck. If DTC P1684 is indicated, go to step 11.

    NO△Go to step 11.

11. Replace the throttle body (see page 11-372).

12. Turn the ignition switch to ON (II).

13. Reset the PCM with the HDS.

14. Do the PCM idle learn procedure (see page 11-333).

15. Turn the ignition switch to LOCK (0), and wait 10 seconds.

16. Turn the ignition switch to ON (II).

17. Check for Temporary DTCs or DTCs with the HDS.

    Is DTC P1684 indicated?

    YES△If the throttle body was cleaned, go to step 11. If the throttle body was replaced, check for poor connections or loose terminals at the throttle body and the PCM, then go to step 1.

    NO△Troubleshooting is complete. If any other Temporary DTCs or DTCs are indicated, go to the indicated DTC's troubleshooting.■

DTC P2101: ETCS Malfunction

⚠CAUTION

Do not insert your fingers into the installed throttle body when you turn the ignition switch to ON (II) or while the ignition switch is ON (II). If you do, you will seriously injure your fingers if the throttle valve is activated.

NOTE: Before you troubleshoot, record all freeze data and any on-board snapshot, and review the general troubleshooting information (see page 11-3).

1. Turn the ignition switch to ON (II).

2. Clear the DTC with the HDS.

3. Do the ETCS TEST in the INSPECTION MENU with the HDS.

4. Check for Temporary DTCs or DTCs with the HDS.

   Is DTC P2101 indicated?

   YES△Go to step 7.

   NO△Go to step 5.

5. Test-drive the vehicle for several minutes in the range of these recorded freeze data parameters:

   - ENGINE SPEED
   - VSS
   - APP SENSOR

6. Check for Temporary DTCs or DTCs with the HDS.

   Is DTC P2101 indicated?

   YES△Go to step 7.

   NO△Intermittent failure, the system is OK at this time. Check for poor connections or loose terminals at the throttle body and the PCM, then clean the throttle body (see page 11-370).■

7. Turn the ignition switch to LOCK (0).

8. Disconnect the intake air duct from the throttle body (see page 11-372).

9. Turn the ignition switch to ON (II).

10. Clear the DTC with the HDS.

11. Do the ETCS TEST in the INSPECTION MENU with the HDS.

12. Visually check the throttle valve operation.

    Does the throttle valve operate smoothly?

    YES△Clean the throttle body (see page 11-370), then go to step 22 and recheck. If DTC P2101 is indicated, go to step 19.

    NO△Go to step 13.

13. Turn the ignition switch to LOCK (0).

14. Disconnect the throttle body 6P connector.

15. Jump the SCS line with the HDS.

16. Disconnect PCM connector C (44P).

17. Connect throttle body 6P connector terminals No. 5 and No. 6 with a jumper wire.

THROTTLE BODY 6P CONNECTOR

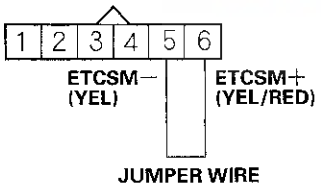

Wire side of female terminals

18. Check for continuity between PCM connector terminals C3 and C4.

PCM CONNECTOR C (44P)

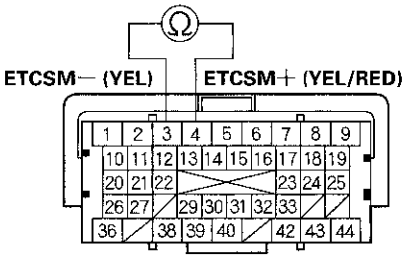

Terminal side of female terminals

Is there continuity?

YES△Go to step 27.

NO△Repair open in the wires between the throttle body and the PCM (C3, C4), then go to step 21.

19. Turn the ignition switch to LOCK (0).

20. Replace the throttle body (see page 11-372).

21. Reconnect all connectors.

22. Turn the ignition switch to ON (II).

23. Reset the PCM with the HDS.

24. Do the PCM idle learn procedure (see page 11-333).

(cont'd)

DTC Troubleshooting (cont'd)

25. Test-drive the vehicle for several minutes in the range of these recorded freeze data parameters:

    - ENGINE SPEED
    - VSS
    - APP SENSOR

26. Check for Temporary DTCs or DTCs with the HDS.

    Is DTC P2101 indicated?

    YES△Check for poor connections or loose terminals at the throttle body and the PCM, then clean the throttle body (see page 11-370), and go to step 1.

    NO△Troubleshooting is complete. If any other Temporary DTCs or DTCs are indicated, go to the indicated DTC's troubleshooting.■

27. Reconnect all connectors.

28. Update the PCM if it does not have the latest software (see page 11-236), or substitute a known-good PCM (see page 11-7).

29. Test-drive the vehicle for several minutes in the range of these recorded freeze data parameters:

    - ENGINE SPEED
    - VSS
    - APP SENSOR

30. Check for Temporary DTCs or DTCs with the HDS.

    Is DTC P2101 indicated?

    YES△Check for poor connections or loose terminals at the throttle body and the PCM. If the PCM was updated, substitute a known-good PCM (see page 11-7), then go to step 29. If the PCM was substituted, go to step 1.

    NO△If the PCM was updated, troubleshooting is complete. If the PCM was substituted, replace the original PCM (see page 11-238). If any other Temporary DTCs or DTCs are indicated, go to the indicated DTC's troubleshooting.■

DTC P2118: Throttle Actuator Current Range/ Performance Problem

NOTE: Before you troubleshoot, record all freeze data and any on-board snapshot, and review the general troubleshooting information (see page 11-3).

1. Jump the SCS line with the HDS.

2. Disconnect PCM connector C (44P).

3. Measure the resistance between PCM connector terminals C3 and C4.

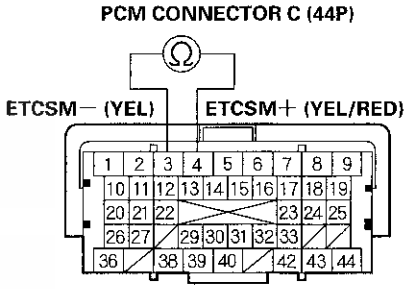

Terminal side of female terminals

Is there about 1.0 Ω or less?

YES△Go to step 4.

NO△Go to step 15.

4. Disconnect the throttle body 6P connector.

5. At the throttle body side, measure the resistance between throttle body 6P connector terminals No. 5 and No. 6 with the throttle fully closed.

THROTTLE BODY 6P CONNECTOR

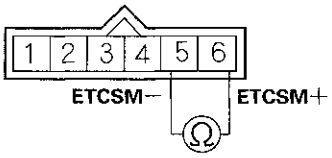

Terminal side of male terminals

Is there about 1.0 Ω or less?

YES△Go to step 6.

NO△Repair short in the wires between PCM connector terminals C3 (ETCSM− line) and C4 (ETCSM+ line), then go to step 7.

6. Replace the throttle body (see page 11-372).

7. Reconnect all connectors.

8. Turn the ignition switch to ON (II).

9. Reset the PCM with the HDS.

10. Do the PCM idle learn procedure (see page 11-333).

11. Turn the ignition switch to LOCK (0).

12. Turn the ignition switch to ON (II).

13. Slowly press the accelerator pedal to the floor.

14. Check for Temporary DTCs or DTCs with the HDS.

Is DTC P2118 indicated?

YES△Check for poor connections or loose terminals at the throttle body and the PCM, then go to step 1.

NO△Troubleshooting is complete. If any other Temporary DTCs or DTCs are indicated, go to the indicated DTC's troubleshooting.■

15. Reconnect all connectors.

16. Update the PCM if it does not have the latest software (see page 11-236), or substitute a known-good PCM (see page 11-7).

17. Turn the ignition switch to LOCK (0).

18. Turn the ignition switch to ON (II).

19. Slowly press the accelerator pedal to the floor.

20. Check for Temporary DTCs or DTCs with the HDS.

Is DTC P2118 indicated?

YES△Check for poor connections or loose terminals at the throttle body and the PCM. If the PCM was updated, substitute a known-good PCM (see page 11-7), then go to step 17. If the PCM was substituted, go to step 1.

NO△If the PCM was updated, troubleshooting is complete. If the PCM was substituted, replace the original PCM (see page 11-238). If any other Temporary DTCs or DTCs are indicated, go to the indicated DTC's troubleshooting.■

DTC Troubleshooting (cont'd)

DTC P2122: APP Sensor A (TP Sensor D) Circuit Low Voltage

NOTE: Before you troubleshoot, record all freeze data and any on-board snapshot, and review the general troubleshooting information (see page 11-3).

1. Turn the ignition switch to ON (II).
2. Check APP SENSOR A in the DATA LIST with the HDS.

   Is there about 0.2 V or less?

   YES△Go to step 3.

   NO△Intermittent failure, the system is OK at this time. Check for poor connections or loose terminals at the APP sensor and the PCM.■

3. Turn the ignition switch to LOCK (0).
4. Disconnect the APP sensor 6P connector.
5. Turn the ignition switch to ON (II).
6. Measure the voltage between APP sensor 6P connector terminals No. 2 and No. 3.

APP SENSOR 6P CONNECTOR

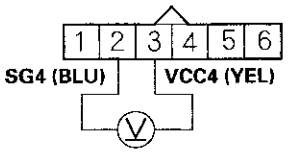

Wire side of female terminals

Is there about 5 V?

YES△Go to step 7.

NO△Go to step 17.

7. Turn the ignition switch to LOCK (0).
8. Jump the SCS line with the HDS.
9. Disconnect PCM connector A (44P).
10. Check for continuity between APP sensor 6P connector terminal No. 1 and body ground.

APP SENSOR 6P CONNECTOR

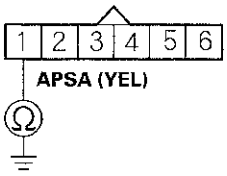

Wire side of female terminals

Is there continuity?

YES△Repair short in the wire between the PCM (A17) and the APP sensor, then go to step 24.

NO△Go to step 11.

11. Connect APP sensor 6P connector terminal No. 1 to body ground with a jumper wire.

APP SENSOR 6P CONNECTOR

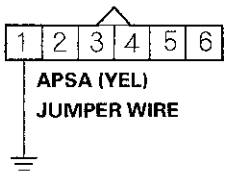

Wire side of female terminals

12. Check for continuity between PCM connector terminal A17 and body ground.

PCM CONNECTOR A (44P)

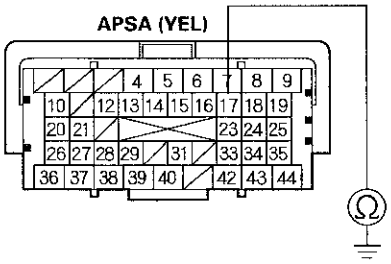

Terminal side of female terminals

Is there continuity?

YES△Go to step 13.

NO△Repair open in the wire between the PCM (A17) and the APP sensor, then go to step 24.

13. Reconnect PCM connector A (44P).

14. Connect APP sensor 6P connector terminals No. 1 and No. 3 with a jumper wire.

APP SENSOR 6P CONNECTOR

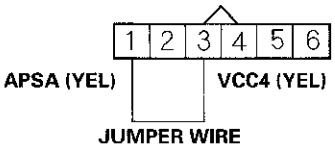

Wire side of female terminals

15. Turn the ignition switch to ON (II).

16. Check APP SENSOR A in the DATA LIST with the HDS.

Is there about 0.2 V or less?

YES△Go to step 29.

NO△Go to step 22.

17. Turn the ignition switch to LOCK (0).

18. Jump the SCS line with the HDS.

19. Disconnect PCM connector A (44P).

20. Connect APP sensor 6P connector terminal No. 3 to body ground with a jumper wire.

APP SENSOR 6P CONNECTOR

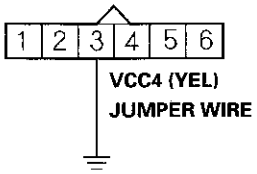

Wire side of female terminals

(cont'd)

DTC Troubleshooting (cont'd)

21. Check for continuity between PCM connector terminal A25 and body ground.

PCM CONNECTOR A (44P)

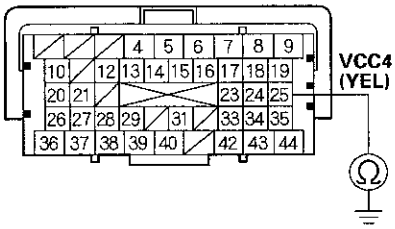

Terminal side of female terminals

Is there continuity?

YES△Go to step 30.

NO△Repair open in the wire between the PCM (A25) and the APP sensor, then go to step 24.

22. Turn the ignition switch to LOCK (0).

23. Replace the accelerator pedal module; '06-08 models (see page 11-277), '09 model (see page 11-278).

24. Reconnect all connectors.

25. Turn the ignition switch to ON (II).

26. Reset the PCM with the HDS.

27. Do the PCM idle learn procedure (see page 11-333).

28. Check for Temporary DTCs or DTCs with the HDS.

Is DTC P2122 indicated?

YES△Check for poor connections or loose terminals at the APP sensor and the PCM, then go to step 1.

NO△Troubleshooting is complete. If any other Temporary DTCs or DTCs are indicated, go to the indicated DTC's troubleshooting.■

29. Turn the ignition switch to LOCK (0).

30. Reconnect all connectors.

31. Update the PCM if it does not have the latest software (see page 11-236), or substitute a known-good PCM (see page 11-7).

32. Check for Temporary DTCs or DTCs with the HDS.

Is DTC P2122 indicated?

YES△Check for poor connections or loose terminals at the APP sensor and the PCM. If the PCM was updated, substitute a known-good PCM (see page 11-7), then recheck. If the PCM was substituted, go to step 1.

NO△If the PCM was updated, troubleshooting is complete. If the PCM was substituted, replace the original PCM (see page 11-238). If any other Temporary DTCs or DTCs are indicated, go to the indicated DTC's troubleshooting.■

DTC P2123: APP Sensor A (TP Sensor D) Circuit High Voltage

NOTE: Before you troubleshoot, record all freeze data and any on-board snapshot, and review the general troubleshooting information (see page 11-3).

1. Turn the ignition switch to ON (II).

2. Check APP SENSOR A in the DATA LIST with the HDS.

   Is there about 4.9 V or more?

   YES△Go to step 3.

   NO△Intermittent failure, the system is OK at this time. Check for poor connections or loose terminals at the APP sensor and the PCM.■

3. Turn the ignition switch to LOCK (0).

4. Disconnect the APP sensor 6P connector.

5. Turn the ignition switch to ON (II).

6. Measure the voltage between APP sensor 6P connector terminals No. 2 and No. 3.

APP SENSOR 6P CONNECTOR

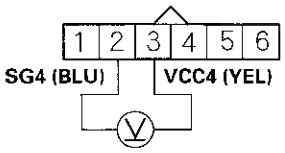

Wire side of female terminals

Is there about 5 V?

YES△Go to step 12.

NO△Go to step 7.

7. Turn the ignition switch to LOCK (0).

8. Jump the SCS line with the HDS.

9. Disconnect PCM connector A (44P).

10. Connect APP sensor 6P connector terminal No. 2 to body ground with a jumper wire.

APP SENSOR 6P CONNECTOR

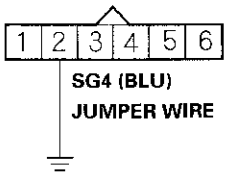

Wire side of female terminals

11. Check for continuity between PCM connector terminal A35 and body ground.

PCM CONNECTOR A (44P)

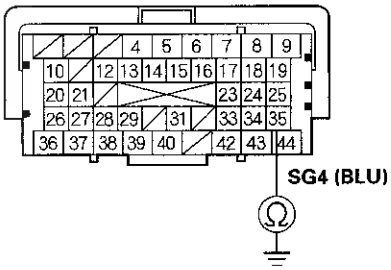

Terminal side of female terminals

Is there continuity?

YES△Go to step 19.

NO△Repair open in the wire between the PCM (A35) and the APP sensor, then go to step 14.

(cont'd)

DTC Troubleshooting (cont'd)

12. Turn the ignition switch to LOCK (0).

13. Replace the accelerator pedal module; '06-08 models (see page 11-277), '09 model (see page 11-278).

14. Reconnect all connectors.

15. Turn the ignition switch to ON (II).

16. Reset the PCM with the HDS.

17. Do the PCM idle learn procedure (see page 11-333).

18. Check for Temporary DTCs or DTCs with the HDS.

    Is DTC P2123 indicated?

    YES△Check for poor connections or loose terminals at the APP sensor and the PCM, then go to step 1.

    NO△Troubleshooting is complete. If any other Temporary DTCs or DTCs are indicated, go to the indicated DTC's troubleshooting.■

19. Reconnect all connectors.

20. Update the PCM if it does not have the latest software (see page 11-236), or substitute a known-good PCM (see page 11-7).

21. Check for Temporary DTCs or DTCs with the HDS.

    Is DTC P2123 indicated?

    YES△Check for poor connections or loose terminals at the APP sensor and the PCM. If the PCM was updated, substitute a known-good PCM (see page 11-7), then recheck. If the PCM was substituted, go to step 1.

    NO△If the PCM was updated, troubleshooting is complete. If the PCM was substituted, replace the original PCM (see page 11-238). If any other Temporary DTCs or DTCs are indicated, go to the indicated DTC's troubleshooting.■

DTC P2127: APP Sensor B (TP Sensor E) Circuit Low Voltage

NOTE: Before you troubleshoot, record all freeze data and any on-board snapshot, and review the general troubleshooting information (see page 11-3).

1. Turn the ignition switch to ON (II).

2. Check APP SENSOR B in the DATA LIST with the HDS.

   Is there about 0.2 V or less?

   YES△Go to step 3.

   NO△Intermittent failure, the system is OK at this time. Check for poor connections or loose terminals at the APP sensor and the PCM.■

3. Turn the ignition switch to LOCK (0).

4. Disconnect the APP sensor 6P connector.

5. Turn the ignition switch to ON (II).

6. Measure the voltage between APP sensor 6P connector terminals No. 5 and No. 6.

APP SENSOR 6P CONNECTOR

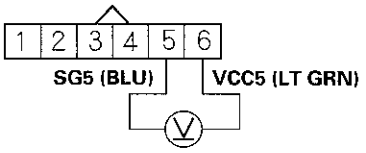

Wire side of female terminals

Is there about 5 V?

YES△Go to step 7.

NO△Go to step 17.

7. Turn the ignition switch to LOCK (0).

8. Jump the SCS line with the HDS.

9. Disconnect PCM connector A (44P).

10. Check for continuity between APP sensor 6P connector terminal No. 4 and body ground.

APP SENSOR 6P CONNECTOR

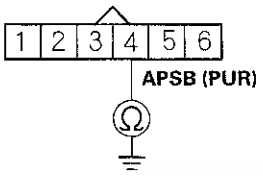

Wire side of female terminals

Is there continuity?

YES△Repair short in the wire between the PCM (A18) and the APP sensor, then go to step 24.

NO△Go to step 11.

11. Connect APP sensor 6P connector terminal No. 4 to body ground with a jumper wire.

APP SENSOR 6P CONNECTOR

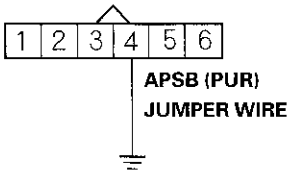

Wire side of female terminals

12. Check for continuity between PCM connector terminal A18 and body ground.

PCM CONNECTOR A (44P)

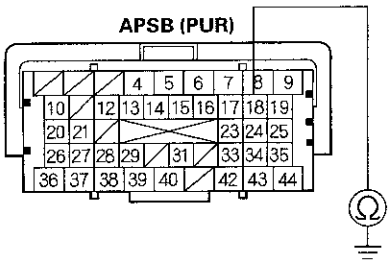

Terminal side of female terminals

Is there continuity?

YES△Go to step 13.

NO△Repair open in the wire between the PCM (A18) and the APP sensor, then go to step 24.

13. Reconnect PCM connector A (44P).

14. Connect APP sensor 6P connector terminals No. 4 and No. 6 with a jumper wire.

APP SENSOR 6P CONNECTOR

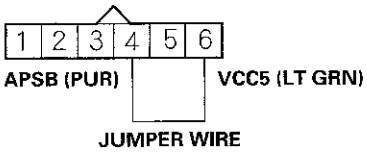

Wire side of female terminals

(cont'd)

DTC Troubleshooting (cont'd)

15. Turn the ignition switch to ON (II).

16. Check APP SENSOR B in the DATA LIST with the HDS.

    Is there about 0.2 V or less?

    YES△Go to step 29.

    NO△Go to step 22.

17. Turn the ignition switch to LOCK (0).

18. Jump the SCS line with the HDS.

19. Disconnect PCM connector A (44P).

20. Connect APP sensor 6P connector terminal No. 6 to body ground with a jumper wire.

APP SENSOR 6P CONNECTOR

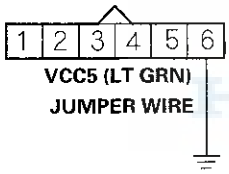

Wire side of female terminals

21. Check for continuity between PCM connector terminal A24 and body ground.

PCM CONNECTOR A (44P)

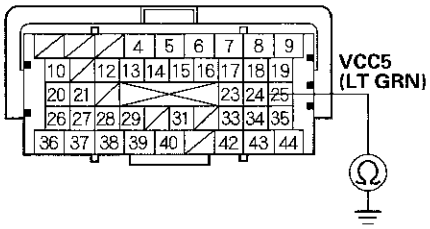

Terminal side of female terminals

    Is there continuity?

    YES△Go to step 30.

    NO△Repair open in the wire between the PCM (A24) and the APP sensor, then go to step 24.

22. Turn the ignition switch to LOCK (0).

23. Replace the accelerator pedal module; '06-08 models (see page 11-277), '09 model (see page 11-278).

24. Reconnect all connectors.

25. Turn the ignition switch to ON (II).

26. Reset the PCM with the HDS.

27. Do the PCM idle learn procedure (see page 11-333).

28. Check for Temporary DTCs or DTCs with the HDS.

    Is DTC P2127 indicated?

    YES△Check for poor connections or loose terminals at the APP sensor and the PCM, then go to step 1.

    NO△Troubleshooting is complete. If any other Temporary DTCs or DTCs are indicated, go to the indicated DTC's troubleshooting.■

29. Turn the ignition switch to LOCK (0).

30. Reconnect all connectors.

31. Update the PCM if it does not have the latest software (see page 11-236), or substitute a known-good PCM (see page 11-7).

32. Check for Temporary DTCs or DTCs with the HDS.

    Is DTC P2127 indicated?

    YES△Check for poor connections or loose terminals at the APP sensor and the PCM. If the PCM was updated, substitute a known-good PCM (see page 11-7), then recheck. If the PCM was substituted, go to step 1.

    NO△If the PCM was updated, troubleshooting is complete. If the PCM was substituted, replace the original PCM (see page 11-238). If any other Temporary DTCs or DTCs are indicated, go to the indicated DTC's troubleshooting.■

DTC P2128: APP Sensor B (TP Sensor E) Circuit High Voltage

NOTE: Before you troubleshoot, record all freeze data and any on-board snapshot, and review the general troubleshooting information (see page 11-3).

1. Turn the ignition switch to ON (II).

2. Check APP SENSOR B in the DATA LIST with the HDS.

   Is there about 4.0 V or more?

   YES△Go to step 3.

   NO△Intermittent failure, the system is OK at this time. Check for poor connections or loose terminals the APP sensor and the PCM.■

3. Turn the ignition switch to LOCK (0).

4. Disconnect the APP sensor 6P connector.

5. Turn the ignition switch to ON (II).

6. Measure the voltage between APP sensor 6P connector terminals No. 5 and No. 6.

APP SENSOR 6P CONNECTOR

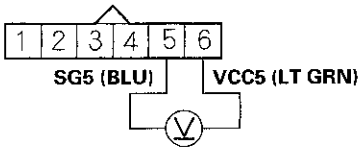

Wire side of female terminals

Is there about 5 V?

YES△Go to step 12.

NO△Go to step 7.

(cont'd)

DTC Troubleshooting (cont'd)

7. Turn the ignition switch to LOCK (0).

8. Jump the SCS line with the HDS.

9. Disconnect PCM connector A (44P).

10. Connect APP sensor 6P connector terminal No. 5 to body ground with a jumper wire.

APP SENSOR 6P CONNECTOR

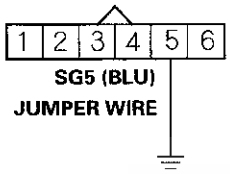

Wire side of female terminals

11. Check for continuity between PCM connector terminal A34 and body ground.

PCM CONNECTOR A (44P)

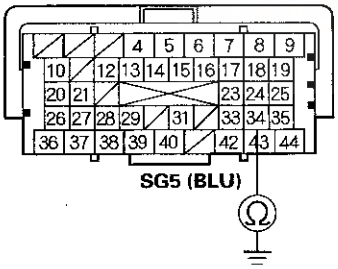

Terminal side of female terminals

Is there continuity?

YES△Go to step 19.

NO△Repair open in the wire between the PCM (A34) and the APP sensor, then go to step 14.

12. Turn the ignition switch to LOCK (0).

13. Replace the accelerator pedal module; '06-08 models (see page 11-277), '09 model (see page 11-278).

14. Reconnect all connectors.

15. Turn the ignition switch to ON (II).

16. Reset the PCM with the HDS.

17. Do the PCM idle learn procedure (see page 11-333).

18. Check for Temporary DTCs or DTCs with the HDS.

Is DTC P2128 indicated?

YES△Check for poor connections or loose terminals at the APP sensor and the PCM, then go to step 1.

NO△Troubleshooting is complete. If any other Temporary DTCs or DTCs are indicated, go to the indicated DTC's troubleshooting.■

19. Reconnect all connectors.

20. Update the PCM if it does not have the latest software (see page 11-236), or substitute a known-good PCM (see page 11-7).

21. Check for Temporary DTCs or DTCs with the HDS.

Is DTC P2128 indicated?

YES△Check for poor connections or loose terminals at the APP sensor and the PCM. If the PCM was updated, substitute a known-good PCM (see page 11-7), then recheck. If the PCM was substituted, go to step 1.

NO△If the PCM was updated, troubleshooting is complete. If the PCM was substituted, replace the original PCM (see page 11-238). If any other Temporary DTCs or DTCs are indicated, go to the indicated DTC's troubleshooting.■

DTC P2135: TP Sensor A/B Incorrect Voltage Correlation

⚠CAUTION

Do not insert your fingers into the installed throttle body when you turn the ignition switch to ON (II) or while the ignition switch is ON (II). If you do, you will seriously injure your fingers if the throttle valve is activated.

NOTE: Before you troubleshoot, record all freeze data and any on-board snapshot, and review the general troubleshooting information (see page 11-3).

1. Turn the ignition switch to ON (II).
2. Clear the DTC with the HDS.
3. Do the ETCS TEST in the INSPECTION MENU with the HDS.
4. Check for Temporary DTCs or DTCs with the HDS.

   Is DTC P2135 indicated?

   YES△Go to step 5.

   NO△Intermittent failure, the system is OK at this time. Check for poor connections or loose terminals at the throttle body and the PCM.■

5. Turn the ignition switch to LOCK (0).
6. Disconnect the intake air duct from the throttle body.
7. Turn the ignition switch to ON (II).
8. Visually check the throttle valve operation while you clear the DTC with the HDS.

   Does the valve temporarily move to its fully closed position?

   YES△Go to step 15.

   NO△Go to step 9.

9. Turn the ignition switch to LOCK (0).
10. Jump the SCS line with the HDS.
11. Disconnect PCM connector C (44P).
12. Check for continuity between PCM connector terminals C20 and C21.

PCM CONNECTOR C (44P)

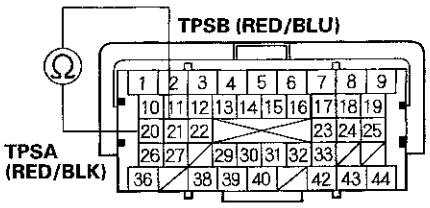

Terminal side of female terminals

Is there continuity?

YES△Go to step 13.

NO△Go to step 22.

(cont'd)

DTC Troubleshooting (cont'd)

13. Disconnect the throttle body 6P connector.

14. Check for continuity between PCM connector terminals C20 and C21.

PCM CONNECTOR C (44P)

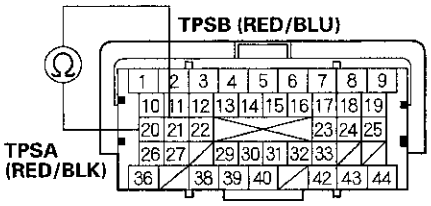

Terminal side of female terminals

Is there continuity?

YES△Repair short in the wire between the PCM connector terminals C20 (TPSA line) and C21 (TPSB line), then go to step 17.

NO△Go to step 15.

15. Turn the ignition switch to LOCK (0).

16. Replace the throttle body (see page 11-372).

17. Reconnect all connectors.

18. Turn the ignition switch to ON (II).

19. Reset the PCM with the HDS.

20. Do the PCM idle learn procedure (see page 11-333).

21. Check for Temporary DTCs or DTCs with the HDS.

Is DTC P2135 indicated?

YES△Check for poor connections or loose terminals at the throttle body and the PCM, then go to step 1.

NO△Troubleshooting is complete. If any other Temporary DTCs or DTCs are indicated, go to the indicated DTC's troubleshooting.■

22. Reconnect all connectors.

23. Update the PCM if it does not have the latest software (see page 11-236), or substitute a known-good PCM (see page 11-7).

24. Check for Temporary DTCs or DTCs with the HDS.

Is DTC P2135 indicated?

YES△Check for poor connections or loose terminals at the throttle body and the PCM. If the PCM was updated, substitute a known-good PCM (see page 11-7), then recheck. If the PCM was substituted, go to step 1.

NO△If the PCM was updated, troubleshooting is complete. If the PCM was substituted, replace the original PCM (see page 11-238). If any other Temporary DTCs or DTCs are indicated, go to the indicated DTC's troubleshooting.■

DTC P2138: APP Sensor A/B (TP Sensor D/E) Incorrect Voltage Correlation

NOTE: Before you troubleshoot, record all freeze data and any on-board snapshot, and review the general troubleshooting information (see page 11-3).

1. Turn the ignition switch to ON (II).
2. Clear the DTC with HDS.
3. Press the accelerator pedal to the floor.
4. Check for Temporary DTCs or DTCs with the HDS.

   Is DTC P2138 indicated?

   YES△Go to step 5.

   NO△Intermittent failure, the system is OK at this time. Check for poor connections or loose terminals at the APP sensor and the PCM.■

5. Check APP SENSOR A and APP SENSOR B in the DATA LIST with the HDS.

   Are they the same voltage?

   YES△Go to step 6.

   NO△Go to step 12.

6. Turn the ignition switch to LOCK (0).
7. Jump the SCS line with the HDS.
8. Disconnect PCM connector A (44P).
9. Check for continuity between PCM connector terminals A17 and A18.

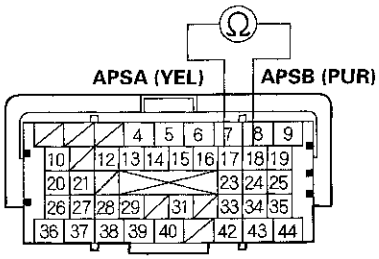

Terminal side of female terminals

   Is there continuity?

   YES△Go to step 10.

   NO△Go to step 21.

10. Disconnect the APP sensor 6P connector.
11. Check for continuity between PCM connector terminals A17 and A18.

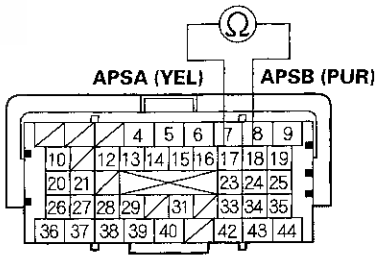

Terminal side of female terminals

   Is there continuity?

   YES△Repair short in the wire between PCM connector terminals A17 (APSA line) and A18 (APSB line), then go to step 14.

   NO△Go to step 13.

(cont'd)

DTC Troubleshooting (cont'd)

12. Turn the ignition switch to LOCK (0).
13. Replace the accelerator pedal module; '06-08 models (see page 11-277), '09 model (see page 11-278).
14. Reconnect all connectors.
15. Turn the ignition switch to ON (II).
16. Reset the PCM with the HDS.
17. Do the PCM idle learn procedure (see page 11-333).
18. Turn the ignition switch to LOCK (0).
19. Turn the ignition switch to ON (II).
20. Press the accelerator pedal to the floor.
21. Check for Temporary DTCs or DTCs with the HDS.

    Is DTC P2138 indicated?

    YES△Check for poor connections or loose terminals at the APP sensor and the PCM, then go to step 1.

    NO△Troubleshooting is complete. If any other Temporary DTCs or DTCs are indicated, go to the indicated DTC's troubleshooting.■
22. Reconnect all connectors.
23. Update the PCM if it does not have the latest software (see page 11-236), or substitute a known-good PCM (see page 11-7).
24. Turn the ignition switch to LOCK (0).
25. Turn the ignition switch to ON (II).
26. Press the accelerator pedal to the floor.
27. Check for Temporary DTCs or DTCs with the HDS.

    Is DTC P2138 indicated?

    YES△Check for poor connections or loose terminals at the APP sensor and the PCM. If the PCM was updated, substitute a known-good PCM (see page 11-7), then go to step 23. If the PCM was substituted, go to step 1.

    NO△If the PCM was updated, troubleshooting is complete. If the PCM was substituted, replace the original PCM (see page 11-238). If any other Temporary DTCs or DTCs are indicated, go to the indicated DTC's troubleshooting.■

DTC P2176: Throttle Actuator Control System Idle Position Not Learned

⚠CAUTION

Do not insert your fingers into the installed throttle body when you turn the ignition switch to ON (II) or while the ignition switch is ON (II). If you do, you will seriously injure your fingers if the throttle valve is activated.

NOTE:
- Before you troubleshoot, record all freeze data and any on-board snapshot, and review the general troubleshooting information (see page 11-3).
- If DTC P2135 is stored at the same time as DTC P2176, troubleshoot DTC P2135 first, then recheck for DTC P2176.

1. Turn the ignition switch to ON (II).
2. Clear the DTC with the HDS.
3. Turn the ignition switch to LOCK (0).
4. Turn the ignition switch to ON (II), and wait 10 seconds.
5. Check for Temporary DTCs or DTCs with the HDS.

   Is DTC P2176 indicated?

   YES△Go to step 6.

   NO△Intermittent failure, the system is OK at this time. Check for poor connections or loose terminals at the throttle body and the PCM, then clean the throttle body (see page 11-370).■
6. Turn the ignition switch to LOCK (0).
7. Disconnect the intake air duct from the throttle body.
8. Turn the ignition switch to ON (II).
9. Clear the DTC with the HDS.
10. Visually check the throttle valve operation while performing the ETCS TEST in the INSPECTION MENU with the HDS.

    Does the throttle valve move to its fully closed position?

    YES△Go to step 11.

    NO△Go to step 12.
11. Check for sludge or carbon on the throttle valve.

    Is there sludge or carbon on the throttle valve?

    YES△Clean the throttle body (see page 11-370), then go to step 21.

    NO△Go to step 18.
12. Turn the ignition switch to LOCK (0).
13. Disconnect the throttle body 6P connector.
14. Jump the SCS line with the HDS.
15. Disconnect PCM connector C (44P).
16. Connect throttle body 6P connector terminals No. 5 and No. 6 with a jumper wire.

THROTTLE BODY 6P CONNECTOR

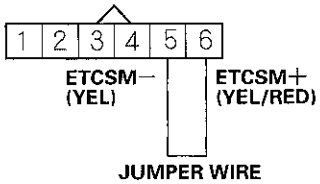

Wire side of female terminals

(cont'd)

DTC Troubleshooting (cont'd)

17. Check for continuity between PCM connector terminals C3 and C4.

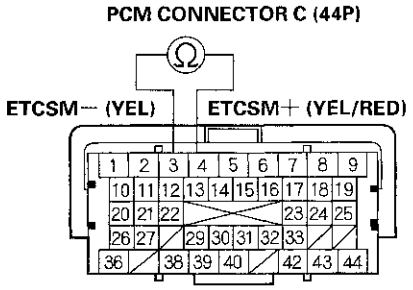

Terminal side of female terminals

Is there continuity?

YES△Go to step 27.

NO△Repair open in the wires between the throttle body and the PCM (C3, C4), then go to step 20.

18. Turn the ignition switch to LOCK (0).

19. Replace the throttle body (see page 11-372).

20. Reconnect all connectors.

21. Turn the ignition switch to ON (II).

22. Reset the PCM with the HDS.

23. Do the PCM idle learn procedure (see page 11-333).

24. Turn the ignition switch to LOCK (0).

25. Turn the ignition switch to ON (II), and wait 10 seconds.

26. Check for Temporary DTCs or DTCs with the HDS.

Is DTC P2176 indicated?

YES△Check for poor connections or loose terminals at the throttle body and the PCM, then clean the throttle body (see page 11-370), and go to step 1.

NO△Troubleshooting is complete. If any other Temporary DTCs or DTCs are indicated, go to the indicated DTC's troubleshooting.■

27. Reconnect all connectors.

28. Update the PCM if it does not have the latest software (see page 11-236), or substitute a known-good PCM (see page 11-7).

29. Check for Temporary DTCs or DTCs with the HDS.

Is DTC P2176 indicated?

YES△Check for poor connections or loose terminals at the throttle body and the PCM. If the PCM was updated, substitute a known-good PCM (see page 11-7), then recheck. If the PCM was substituted, go to step 1.

NO△If the PCM was updated, troubleshooting is complete. If the PCM was substituted, replace the original PCM (see page 11-238). If any other Temporary DTCs or DTCs are indicated, go to the indicated DTC's troubleshooting.■

APP Sensor Signal Inspection

NOTE:
- This procedure checks the APP sensor in this fully closed position. In any other position, the APP sensor stores DTCs which are covered in other troubleshooting procedures.
- Check for Temporary DTCs or DTCs with the HDS before doing this procedure. If any DTCs are indicated, troubleshoot them first, then do this procedure.
- Press the accelerator pedal several times, to check its operation. If it does not operate smoothly, check the pedal. If you find a problem, replace the accelerator pedal module; '06-08 models (see page 11-277), '09 model (see page 11-278).

1. Connect the HDS to the data link connector (DLC) (A) located under the driver's side of the dashboard.

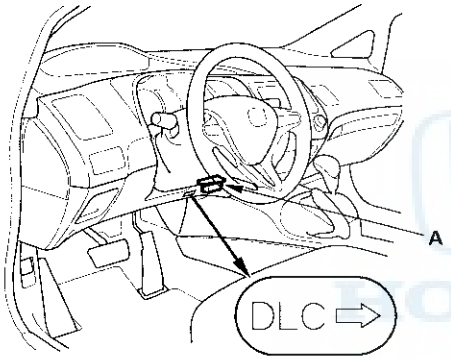

2. Turn the ignition switch to ON (II).

3. Make sure the HDS communicates with the PCM. If it doesn't, go to the DLC circuit troubleshooting (see page 11-213).

4. Make sure the accelerator pedal is not pressed, then check the APP SENSOR in the DATA LIST with the HDS.

   - If it is 0 %, the APP sensor is OK.
   - If it is not 0 %, update the PCM if it does not have the latest software, or substitute a known-good PCM (see page 11-7), then go to step 5.

5. Make sure the accelerator pedal is not pressed, then check the APP SENSOR in the DATA LIST with the HDS.

   - If it is 0 %, the APP sensor is OK.
   - If it is not 0 %, replace the accelerator pedal module; '06-08 models (see page 11-277), '09 model (see page 11-278), then go to step 1.

Accelerator Pedal Module Removal/ Installation

'06-08 models

1. Disconnect the APP sensor 6P connector (A).

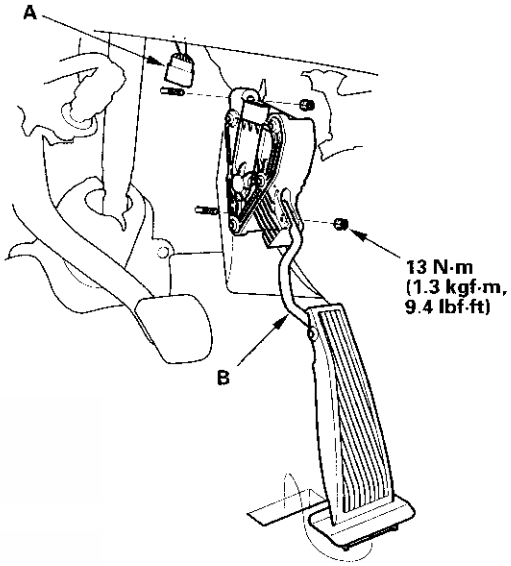

2. Remove the accelerator pedal module (B).

   NOTE: The APP sensor is not available separately. Do not disassemble the accelerator pedal module.

3. Install the parts in the reverse order of removal.

Accelerator Pedal Module Removal/Installation (cont'd)

'09 model

1. Disconnect the APP sensor 6P connector (A).

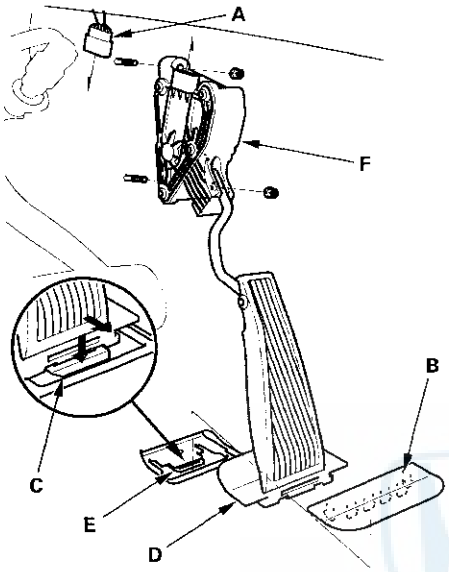

2. Remove the clip (B).

   NOTE: Do not reuse the clip once it is removed.

3. Push the tab (C), and remove the accelerator pedal pad (D) from the pedal stop (E).

4. Remove the accelerator pedal module (F).

   NOTE: The APP sensor is not available separately. Do not disassemble the accelerator pedal module.

5. Set the accelerator pedal pad (A) to the pedal stop (B).

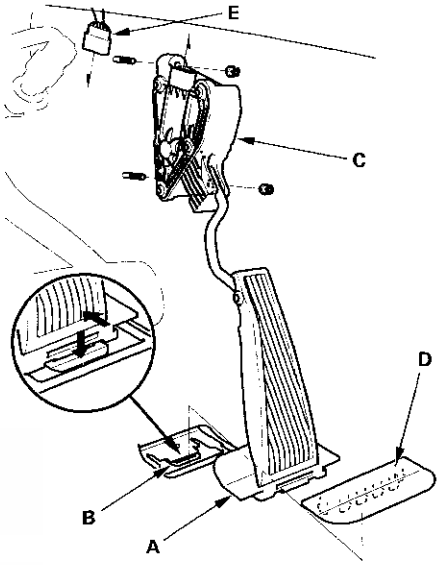

6. Install the accelerator pedal module (C) with a new clip (D).

7. Reconnect the APP sensor 6P connector (E).

Component Location Index

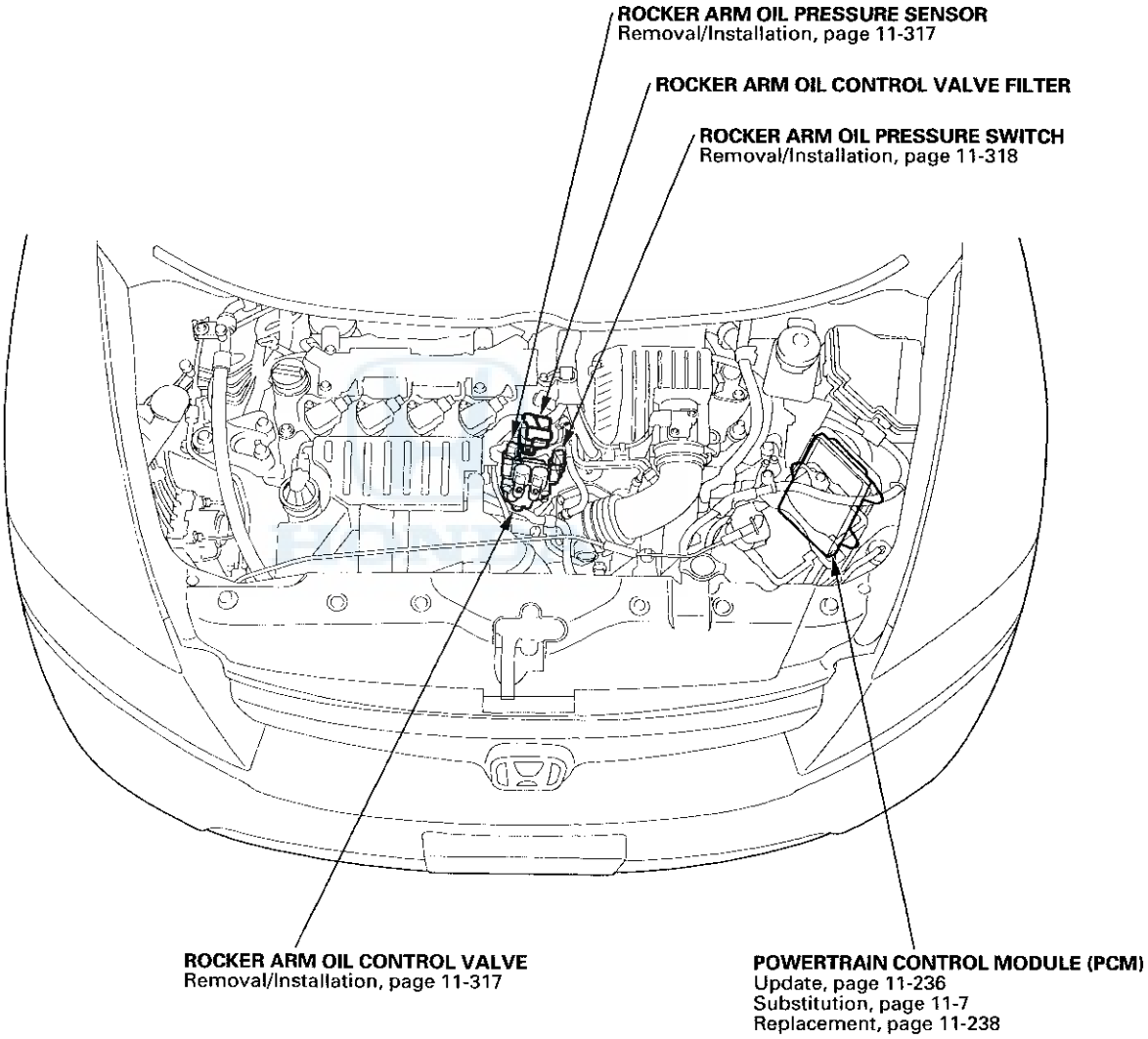

DTC Troubleshooting

DTC P0522: Rocker Arm Oil Pressure Sensor Circuit Low Voltage

NOTE: Before you troubleshoot, record all freeze data and any on-board snapshot, and review the general troubleshooting information (see page 11-3).

1. Turn the ignition switch to ON (II).

2. Check the OIL PRESSURE SENSOR in the DATA LIST with the HDS.

   Is there about 0.18 V or less?

   YES△Go to step 3.

   NO△Intermittent failure, the system is OK at this time. Check for poor connections or loose terminals at the rocker arm oil pressure sensor and the PCM.■

3. Turn the ignition switch to LOCK (0).

4. Disconnect the rocker arm oil pressure sensor 3P connector.

5. Turn the ignition switch to ON (II).

6. Check the OIL PRESSURE SENSOR in the DATA LIST with the HDS.

   Is there about 0.18 V or less?

   YES△Go to step 8.

   NO△Go to step 7.

7. Measure the voltage between rocker arm oil pressure sensor 3P connector terminals No. 1 and No. 3.

ROCKER ARM OIL PRESSURE SENSOR 3P CONNECTOR

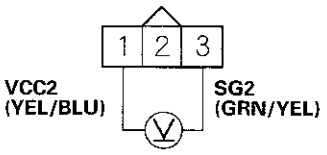

Wire side of female terminals

   Is there about 5 V?

   YES△Go to step 16.

   NO△Go to step 12.

8. Turn the ignition switch to LOCK (0).

9. Jump the SCS line with the HDS.

10. Disconnect PCM connector C (44P).

11. Check for continuity between rocker arm oil pressure sensor 3P connector terminal No. 2 and body ground.

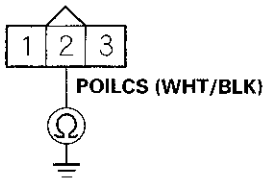

Wire side of female terminals

Is there continuity?

YES△Repair short in the wire between the PCM (C22) and the rocker arm oil pressure sensor, then go to step 18.

NO△Go to step 24.

12. Turn the ignition switch to LOCK (0).

13. Jump the SCS line with the HDS.

14. Disconnect PCM connector B (44P).

15. Check for continuity between PCM connector terminal B18 and rocker arm oil pressure sensor 3P connector terminal No. 1.

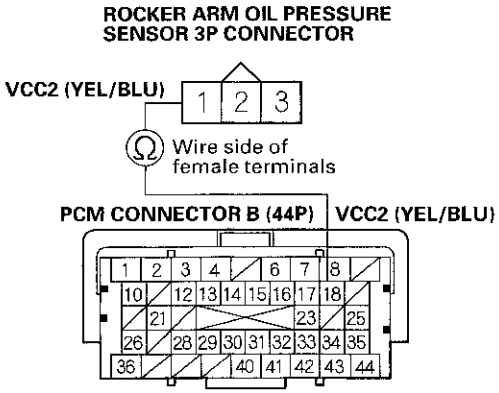

Terminal side of female terminals

Is there continuity?

YES△Go to step 24.

NO△Repair open in the wire between the PCM (B18) and the rocker arm oil pressure sensor, then go to step 18.

16. Turn the ignition switch to LOCK (0).

17. Replace the rocker arm oil pressure sensor (see page 11-317).

18. Reconnect all connectors.

19. Turn the ignition switch to ON (II).

(cont'd)

DTC Troubleshooting (cont'd)

20. Reset the PCM with the HDS.

21. Do the PCM idle learn procedure (see page 11-333).

22. Check for Temporary DTCs or DTCs with the HDS.

    Is DTC P0522 indicated?

    YES△Check for poor connections or loose terminals at the rocker arm oil pressure sensor and the PCM, then go to step 1.

    NO△Go to step 23.

23. Monitor the OBD STATUS for DTC P0522 in the DTCs MENU with the HDS.

    Does the screen indicate PASSED?

    YES△Troubleshooting is complete. If any other Temporary DTCs or DTCs were indicated in step 22, go to the indicated DTC's troubleshooting.■

    NO△If the screen indicates FAILED, check for poor connections or loose terminals at the rocker arm oil pressure sensor and the PCM, then go to step 1. If the screen indicates NOT COMPLETED, keep idling until a result comes on.

24. Reconnect all connectors.

25. Update the PCM if it does not have the latest software (see page 11-236), or substitute a known-good PCM (see page 11-7).

26. Start the engine, and let it idle.

27. Check for Temporary DTCs or DTCs with the HDS.

    Is DTC P0552 indicated?

    YES△Check for poor connections or loose terminals at the rocker arm oil pressure sensor and the PCM. If the PCM was updated, substitute a known-good PCM (see page 11-7), then go to step 26. If the PCM was substituted, go to step 1.

    NO△Go to step 28.

28. Monitor the OBD STATUS for DTC P0522 in the DTCs MENU with the HDS.

    Does the screen indicate PASSED?

    YES△If the PCM was updated, troubleshooting is complete. If the PCM was substituted, replace the original PCM (see page 11-238). If any other Temporary DTCs or DTCs were indicated in step 27, go to the indicated DTC's troubleshooting.■

    NO△If the screen indicates FAILED, check for poor connections or loose terminals at the rocker arm oil pressure sensor and the PCM. If the PCM was updated, substitute a known-good PCM (see page 11-7), then go to step 26. If the PCM was substituted, go to step 1. If the screen indicates NOT COMPLETED, keep idling until a result comes on.

DTC P0523: Rocker Arm Oil Pressure Sensor Circuit High Voltage

NOTE: Before you troubleshoot, record all freeze data and any on-board snapshot, and review the general troubleshooting information (see page 11-3).

1. Turn the ignition switch to ON (II).

2. Check the OIL PRESSURE SENSOR in the DATA LIST with the HDS.

   Is there about 4.79 V or more?

   YES△Go to step 3.

   NO△Intermittent failure, the system is OK at this time. Check for poor connections or loose terminals at the rocker arm oil pressure sensor and the PCM.■

3. Turn the ignition switch to LOCK (0).

4. Disconnect the rocker arm oil pressure sensor 3P connector.

5. Connect rocker arm oil pressure sensor 3P connector terminals No. 2 and No. 3 with a jumper wire.

ROCKER ARM OIL PRESSURE SENSOR 3P CONNECTOR

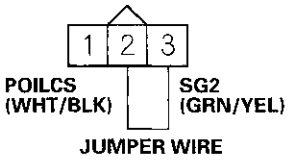

Wire side of female terminals

6. Turn the ignition switch to ON (II).

7. Check the OIL PRESSURE SENSOR in the DATA LIST with the HDS.

   Is there about 4.79 V or more?

   YES△Go to step 8.

   NO△Go to step 18.

8. Remove the jumper wire.

9. Measure the voltage between rocker arm oil pressure sensor 3P connector terminals No. 1 and No. 3.

ROCKER ARM OIL PRESSURE SENSOR 3P CONNECTOR

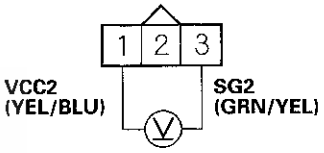

Wire side of female terminals

Is there about 5 V?

YES△Go to step 14.

NO△Go to step 10.

10. Turn the ignition switch to LOCK (0).

(cont'd)

DTC Troubleshooting (cont'd)

11. Jump the SCS line with the HDS.

12. Disconnect PCM connector B (44P).

13. Check for continuity between PCM connector terminal B33 and rocker arm oil pressure sensor 3P connector terminal No. 3.

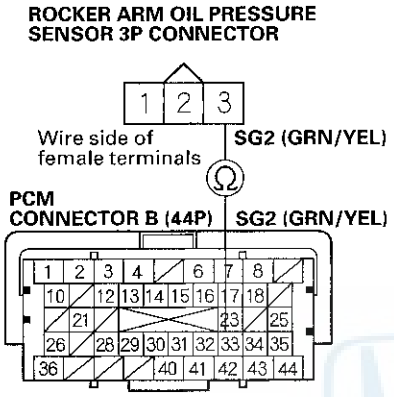

Terminal side of female terminals

Is there continuity?

YES△Go to step 26.

NO△Repair open in the wire between the PCM (B33) and the rocker arm oil pressure sensor, then go to step 20.

14. Turn the ignition switch to LOCK (0).

15. Jump the SCS line with the HDS.

16. Disconnect PCM connector C (44P).

17. Check for continuity between PCM connector terminal C22 and rocker arm oil pressure sensor 3P connector terminal No. 2.

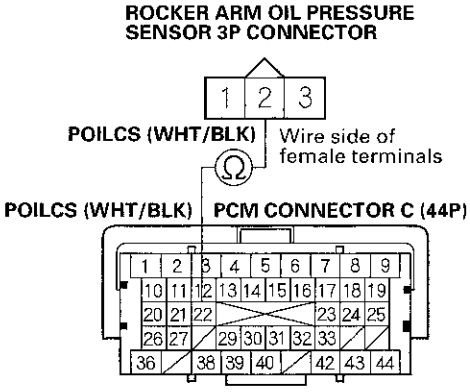

Terminal side of female terminals

Is there continuity?

YES△Go to step 26.

NO△Repair open in the wire between the PCM (C22) and the rocker arm oil pressure sensor, then go to step 20.

18. Turn the ignition switch to LOCK (0).

19. Replace the rocker arm oil pressure sensor (see page 11-317).

20. Reconnect all connectors.

21. Turn the ignition switch to ON (II).

22. Reset the PCM with the HDS.

23. Do the PCM idle learn procedure (see page 11-333).

24. Check for Temporary DTCs or DTCs with the HDS.

    Is DTC P0523 indicated?

    YES△Check for poor connections or loose terminals at the rocker arm oil pressure sensor and the PCM, then go to step 1.

    NO△Go to step 25.

25. Monitor the OBD STATUS for DTC P0523 in the DTCs MENU with the HDS.

    Does the screen indicated PASSED?

    YES△Troubleshooting is complete. If any other Temporary DTCs or DTCs were indicated in step 24, go to the indicated DTC's troubleshooting.■

    NO△If the screen indicates FAILED, check for poor connections or loose terminals at the rocker arm oil pressure sensor and the PCM, then go to step 1. If the screen indicates NOT COMPLETED, keep idling until a result comes on.

26. Reconnect all connectors.

27. Update the PCM if it does not have the latest software (see page 11-236), or substitute a known-good PCM (see page 11-7).

28. Start the engine, and let it idle.

29. Check for Temporary DTCs or DTCs with the HDS.

    Is DTC P0523 indicated?

    YES△Check for poor connections or loose terminals at the rocker arm oil pressure sensor and the PCM. If the PCM was updated, substitute a known-good PCM (see page 11-7), then go to step 28. If the PCM was substituted, go to step 1.

    NO△Go to step 30.

30. Monitor the OBD STATUS for DTC P0523 in the DTCs MENU with the HDS.

    Does the screen indicate PASSED?

    YES△If the PCM was updated, troubleshooting is complete. If the PCM was substituted, replace the original PCM (see page 11-238). If any other Temporary DTCs or DTCs were indicated in step 29, go to the indicated DTC's troubleshooting.■

    NO△If the screen indicates FAILED, check for poor connections or loose terminals at the rocker arm oil pressure sensor and the PCM. If the PCM was updated, substitute a known-good PCM (see page 11-7), then go to step 28. If the PCM was substituted, go to step 1. If the screen indicates NOT COMPLETED, keep idling until a result comes on.

DTC Troubleshooting (cont'd)

DTC P1024: Valve Pause System (VPS) Sticking On

NOTE: Before you troubleshoot, record all freeze data and any on-board snapshot, and review the general troubleshooting information (see page 11-3).

1. Turn the ignition switch to ON (II).
2. Clear the DTC with the HDS.
3. Try to start the engine.

   Does the engine start and idle smoothly?

   YES△Go to step 4.

   NO△Go to step 8.

4. Start the engine. Hold the engine speed at 3,000 rpm without load (in P or N) until the radiator fan comes on, then let it idle.
5. Do the VTEC TEST in the INSPECTION MENU with the HDS.
6. After testing, hold the engine speed at 2,500 rpm without load (in P or N).
7. Monitor the OBD STATUS for DTC P1024 in the DTCs MENU with the HDS.

   Does the screen indicate FAILED?

   YES△Go to step 8.

   NO△If the screen indicates PASSED, intermittent failure, the system is OK at this time. Check for poor connections or loose terminals at rocker arm oil control solenoid 1, rocker arm oil control solenoid 2, the rocker arm oil pressure switch, the rocker arm oil pressure sensor, and the PCM. If the screen indicates EXECUTING, keep testing until a result comes on. If the screen indicates OUT OF CONDITION, go to step 4 and recheck.

8. Turn the ignition switch to LOCK (0).
9. Remove the cylinder head cover.
10. Check the rocker arm operation.

    Are any rocker arms locked?

    YES△Go to step 11.

    NO△Go to step 12.

11. Check the rocker arms, the synchronizing pistons, and the lost motion assembly (see page 6-7).

    Are they OK?

    YES△Go to step 12.

    NO△Repair the rocker arm assembly, then go to step 13.

12. Do the VTEC rocker arm test (see page 6-7).

    Is the VTEC rocker arm OK?

    YES△Check the rocker arm operation again, then go to step 13.

    NO△Replace the rocker arm assembly, then go to step 13.

13. Turn the ignition switch to ON (II).
14. Reset the PCM with the HDS.
15. Do the PCM idle learn procedure (see page 11-333).

16. Start the engine. Hold the engine speed at 3,000 rpm without load (in P or N) until the radiator fan comes on, then let it idle.

17. Do the VTEC TEST in the INSPECTION MENU with the HDS.

18. After testing, hold the engine speed at 2,500 rpm without load (in P or N).

19. Check for Temporary DTCs or DTCs with the HDS.

    Is DTC P1024 indicated?

    YES△Check for poor connections or loose terminals at rocker arm oil control solenoid 1, rocker arm oil control solenoid 2, the rocker arm oil pressure switch, the rocker arm oil pressure sensor, and the PCM, then go to step 1.

    NO△Go to step 20.

20. Monitor the OBD STATUS for DTC P1024 in the DTCs MENU with the HDS.

    Does the screen indicate PASSED?

    YES△Troubleshooting is complete. If any other Temporary DTCs or DTCs were indicated in step 19, go to the indicated DTC's troubleshooting.■

    NO△If the screen indicates FAILED, check for poor connections or loose terminals at rocker arm oil control solenoid 1, rocker arm oil control solenoid 2, the rocker arm oil pressure switch, the rocker arm oil pressure sensor, and the PCM, then go to step 1. If the screen indicates EXECUTING, keep testing until a result comes on. If the screen indicates OUT OF CONDITION, go to step 16.

DTC P1286: Rocker Arm Oil Pressure Sensor Stuck Low

Special Tools Required
- Pressure gauge adapter 07NAJ-P07010A
- A/T low pressure gauge w/panel 07406-0070301
- A/T pressure hose 07406-0020201
- A/T pressure hose, 2,210 mm 07MAJ-PY4011A
- A/T pressure adaptor 07MAJ-PY40120
- Oil pressure hose 07ZAJ-S5AA200

NOTE: Before you troubleshoot, record all freeze data and any on-board snapshot, and review the general troubleshooting information (see page 11-3).

1. Turn the ignition switch to LOCK (0).

2. Check the engine oil level.

   Is the level OK?

   YES△Go to step 3.

   NO△Adjust the engine oil to the proper level, then go to step 14.

3. Turn the ignition switch to ON (II).

4. Clear the DTC with the HDS.

5. Do the VTEC TEST in the INSPECTION MENU with the HDS.

   Is the result OK?

   YES△Intermittent failure, the system is OK at this time. Check for poor connections or loose terminals at rocker arm oil control solenoid 1, rocker arm oil control solenoid 2, the rocker arm oil pressure switch, the rocker arm oil pressure sensor, and the PCM.■

   NO△Go to step 6.

(cont'd)

DTC Troubleshooting (cont'd)

6. Turn the ignition switch to LOCK (0).

7. Remove the rocker arm oil pressure sensor (A), and attach the special tools as shown, then attach the rocker arm oil pressure sensor to the pressure gauge adapter (B).

   NOTE: Install the parts in the reverse order of removal with a new O-ring.

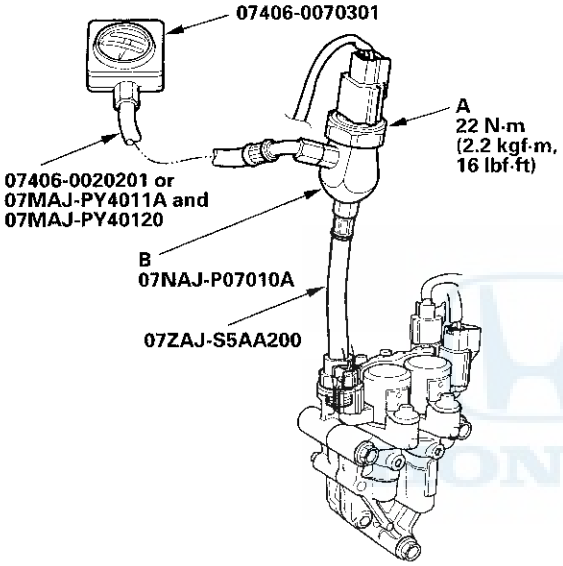

8. Reconnect the rocker arm oil pressure sensor 3P connector.

9. Start the engine.

10. Note the value of the ROCKER ARM OIL PRESSURE SENSOR in the DATA LIST with the HDS.

11. Compare the value of the ROCKER ARM OIL PRESSURE SENSOR and the value of the oil pressure gauge.

    Are they the same values?

    YES△Check the VTEC system oil line, then go to step 12.

    NO△Replace the rocker arm oil pressure sensor (see page 11-317), then go to step 12.

12. Turn the ignition switch to LOCK (0).

13. Reconnect all connectors.

14. Turn the ignition switch to ON (II).

15. Reset the PCM with the HDS.

16. Do the PCM idle learn procedure (see page 11-333).

17. Do the VTEC TEST in the INSPECTION MENU with the HDS.

18. Check for Temporary DTCs or DTCs with the HDS.

    Is DTC P1286 indicated?

    YES△Check for poor connections or loose terminals at rocker arm oil control solenoid 1, rocker arm oil control solenoid 2, the rocker arm oil pressure switch, the rocker arm oil pressure sensor, and the PCM, then go to step 1.

    NO△Go to step 19.

19. Monitor the OBD STATUS for DTC P1286 in the DTCs MENU with the HDS.

    Does the screen indicate PASSED?

    YES△Troubleshooting is complete. If any other Temporary DTCs or DTCs were indicated in step 18, go to the indicated DTC's troubleshooting.■

    NO△If the screen indicates FAILED, check for poor connections or loose terminals at rocker arm oil control solenoid 1, rocker arm oil control solenoid 2, the rocker arm oil pressure switch, the rocker arm oil pressure sensor, and the PCM, then go to step 1. If the screen indicates EXECUTING, keep testing until a result comes on. If the screen indicates OUT OF CONDITION, go to step 17.

DTC P1287: Rocker Arm Oil Pressure Switch Circuit High Voltage

NOTE: Before you troubleshoot, record all freeze data and any on-board snapshot, and review the general troubleshooting information (see page 11-3).

1. Turn the ignition switch to LOCK (0).

2. Check the engine oil level.

   Is the level OK?

   YES△Go to step 3.

   NO△Adjust the engine oil to the proper level, then go to step 18.

3. Turn the ignition switch to ON (II).

4. Clear the DTC with the HDS.

5. Do the VTEC TEST in the INSPECTION MENU with the HDS.

   Is the result OK?

   YES△Intermittent failure, the system is OK at this time. Check for poor connections or loose terminals at rocker arm oil control solenoid 1, rocker arm oil control solenoid 2, the rocker arm oil pressure switch, the rocker arm oil pressure sensor, and the PCM.■

   NO△Go to step 6.

6. Turn the ignition switch to LOCK (0).

7. Disconnect the rocker arm oil pressure switch 2P connector.

(cont'd)

DTC Troubleshooting (cont'd)

8. At the rocker arm oil pressure switch side, check for continuity between rocker arm oil pressure switch 2P connector terminals No. 1 and No. 2.

ROCKER ARM OIL PRESSURE SWITCH 2P CONNECTOR

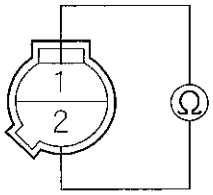

Terminal side of male terminals

Is there continuity?

YES△Go to step 9.

NO△Replace the rocker arm oil pressure switch (see page 11-318), then go to step 16.

9. Connect rocker arm oil pressure switch 2P connector terminal No. 2 to body ground with a jumper wire.

ROCKER ARM OIL PRESSURE SWITCH 2P CONNECTOR

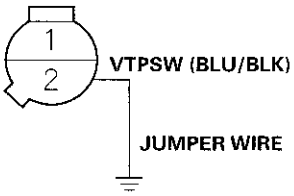

Wire side of female terminals

10. Turn the ignition switch to ON (II).

11. Check the ROCKER ARM OIL PRESSURE SWITCH in the DATA LIST with the HDS.

Does it indicate ON?

YES△Repair open in the wire between the rocker arm oil pressure switch and G102 (see page 22-16), then go to step 16.

NO△Go to step 12.

12. Turn the ignition switch to LOCK (0).

13. Jump the SCS line with the HDS.

14. Disconnect PCM connector C (44P).

15. Check for continuity between rocker arm oil pressure switch 2P connector terminal No. 2 and PCM connector terminal C33.

ROCKER ARM OIL PRESSURE SWITCH 2P CONNECTOR

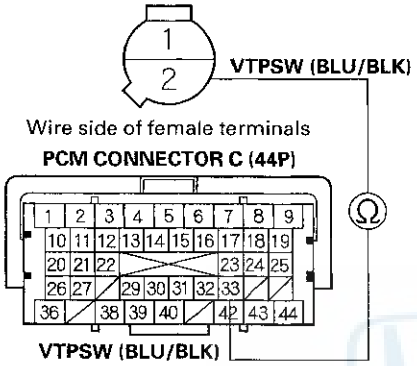

Is there continuity?

YES△Go to step 24.

NO△Repair open in the wire between the PCM (C33) and the rocker arm oil pressure switch, then go to step 16.

16. Turn the ignition switch to LOCK (0).

17. Reconnect all connectors.

18. Turn the ignition switch to ON (II).

19. Reset the PCM with the HDS.

20. Do the PCM idle learn procedure (see page 11-333).

21. Do the VTEC TEST in the INSPECTION MENU with the HDS.

22. Check for Temporary DTCs or DTCs with the HDS.

Is DTC P1287 indicated?

YES△Check for poor connections or loose terminals at rocker arm oil control solenoid 1, rocker arm oil control solenoid 2, the rocker arm oil pressure switch, the rocker arm oil pressure sensor, and the PCM, then go to step 1.

NO△Go to step 23.

23. Monitor the OBD STATUS for DTC P1287 in the DTCs MENU with the HDS.

Does the screen indicate PASSED?

YES△Troubleshooting is complete. If any other Temporary DTCs or DTCs were indicated in step 22, go to the indicated DTC's troubleshooting.■

NO△If the screen indicates FAILED, check for poor connections or loose terminals at rocker arm oil control solenoid 1, rocker arm oil control solenoid 2, the rocker arm oil pressure switch, the rocker arm oil pressure sensor, and the PCM, then go to step 1. If the screen indicates EXECUTING, keep testing until a result comes on. If the screen indicates OUT OF CONDITION, go to step 21.

(cont'd)

DTC Troubleshooting (cont'd)

24. Reconnect all connectors.

25. Update the PCM if it does not have the latest software (see page 11-236), or substitute a known-good PCM (see page 11-7).

26. Do the VTEC TEST in the INSPECTION MENU with the HDS.

27. Check for Temporary DTCs or DTCs with the HDS.

    Is DTC P1287 indicated?

    YES△Check for poor connections or loose terminals at rocker arm oil control solenoid 1, rocker arm oil control solenoid 2, the rocker arm oil pressure switch, the rocker arm oil pressure sensor, and the PCM. If the PCM was updated, substitute a known-good PCM (see page 11-7), then go to step 26. If the PCM was substituted, go to step 1.

    NO△Go to step 28.

28. Monitor the OBD STATUS for DTC P1287 in the DTCs MENU with the HDS.

    Does the screen indicate PASSED?

    YES△If the PCM was updated, troubleshooting is complete. If the PCM was substituted, replace the original PCM (see page 11-238). If any other Temporary DTCs or DTCs were indicated in step 27, go to the indicated DTC's troubleshooting.■

    NO△If the screen indicates FAILED, check for poor connections or loose terminals at rocker arm oil control solenoid 1, rocker arm oil control solenoid 2, the rocker arm oil pressure switch, the rocker arm oil pressure sensor, and the PCM. If the PCM was updated, substitute a known-good PCM (see page 11-7), then go to step 26. If the PCM was substituted, go to step 1. If the screen indicates EXECUTING, keep testing until a result comes on. If the screen indicates OUT OF CONDITION, go to step 26.

DTC P1288: Rocker Arm Oil Pressure Switch Circuit Low Voltage

Special Tools Required
- Pressure gauge adapter 07NAJ-P07010A
- A/T low pressure gauge w/panel 07406-0070301
- A/T pressure hose 07406-0020201
- A/T pressure hose, 2,210 mm 07MAJ-PY4011A
- A/T pressure adaptor 07MAJ-PY40120
- Oil pressure hose 07ZAJ-S5AA200

NOTE: Before you troubleshoot, record all freeze data and any on-board snapshot, and review the general troubleshooting information (see page 11-3).

1. Turn the ignition switch to LOCK (0).

2. Check the engine oil level.

   Is the level OK?

   YES△Go to step 3.

   NO△Adjust the engine oil to the proper level, then go to step 21.

3. Turn the ignition switch to ON (II).

4. Clear the DTC with the HDS.

5. Do the VTEC TEST in the INSPECTION MENU with the HDS.

   Is the result OK?

   YES△Intermittent failure, the system is OK at this time. Check for poor connections or loose terminals at rocker arm oil control solenoid 1, rocker arm oil control solenoid 2, the rocker arm oil pressure switch, the rocker arm oil pressure sensor, and the PCM.■

   NO△Go to step 6.

6. Turn the ignition switch to LOCK (0).

7. Disconnect the rocker arm oil pressure switch 2P connector.

8. Turn the ignition switch to ON (II).

9. Check the ROCKER ARM OIL PRESSURE SWITCH in the DATA LIST with the HDS.

   Does it indicate OFF?

   YES△Go to step 15.

   NO△Go to step 10.

10. Turn the ignition switch to LOCK (0).

11. Remove the rocker arm oil pressure switch (A), and attach the special tools as shown, then attach the rocker arm oil pressure switch to the pressure gauge adapter (B).

    NOTE: Install the parts in the reverse order of removal with a new O-ring.

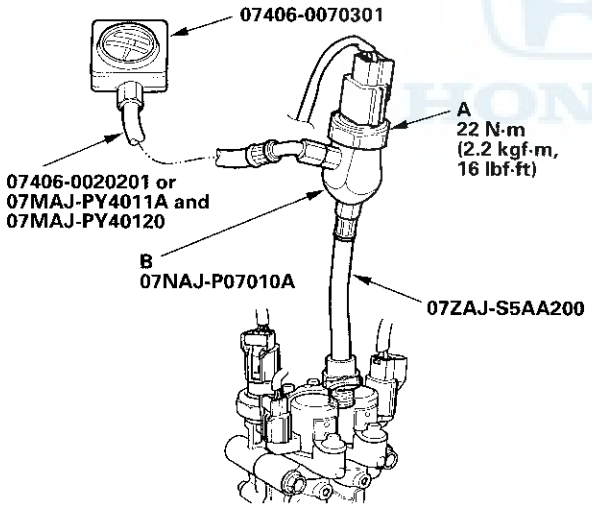

12. Reconnect the rocker arm oil pressure switch 2P connector.

13. Do the VTEC TEST in the INSPECTION MENU with the HDS.

14. Check the oil pressure when the Hi VTEC test is activated.

    Is the oil pressure above 40 kPa (0.4 kgf/cm², 5.8 psi)?

    YES△Replace the rocker arm oil pressure switch (see page 11-318), then go to step 19.

    NO△Check the VTEC system oil line, then go to step 19.

15. Turn the ignition switch to LOCK (0).

16. Jump the SCS line with the HDS.

17. Disconnect PCM connector C (44P).

18. Check for continuity between rocker arm oil pressure switch 2P connector terminal No. 2 and body ground.

ROCKER ARM OIL PRESSURE SWITCH 2P CONNECTOR

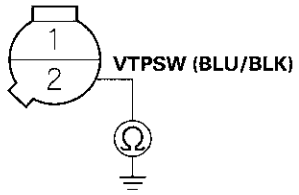

Wire side of female terminals

Is there continuity?

YES△Repair short in the wire between the PCM (C33) and the rocker arm oil pressure switch, then go to step 19.

NO△Go to step 27.

(cont'd)

DTC Troubleshooting (cont'd)

19. Turn the ignition switch to LOCK (0).

20. Reconnect all connectors.

21. Turn the ignition switch to ON (II).

22. Reset the PCM with the HDS.

23. Do the PCM idle learn procedure (see page 11-333).

24. Do the VTEC TEST in the INSPECTION MENU with the HDS.

25. Check for Temporary DTCs or DTCs with the HDS.

    Is DTC P1288 indicated?

    YES△Check for poor connections or loose terminals at rocker arm oil control solenoid 1, rocker arm oil control solenoid 2, the rocker arm oil pressure switch, the rocker arm oil pressure sensor, and the PCM, then go to step 1.

    NO△Go to step 26.

26. Monitor the OBD STATUS for DTC P1288 in the DTCs MENU with the HDS.

    Does the screen indicate PASSED?

    YES△Troubleshooting is complete. If any other Temporary DTCs or DTCs were indicated in step 25, go to the indicated DTC's troubleshooting.■

    NO△If the screen indicates FAILED, check for poor connections or loose terminals at rocker arm oil control solenoid 1, rocker arm oil control solenoid 2, the rocker arm oil pressure switch, the rocker arm oil pressure sensor, and the PCM, then go to step 1. If the screen indicates EXECUTING, keep testing until a result comes on. If the screen indicates OUT OF CONDITION, go to step 24.

27. Reconnect all connectors.

28. Update the PCM if it does not have the latest software (see page 11-236), or substitute a known-good PCM (see page 11-7).

29. Do the VTEC TEST in the INSPECTION MENU with the HDS.

30. Check for Temporary DTCs or DTCs with the HDS.

    Is DTC P1288 indicated?

    YES△Check for poor connections or loose terminals at rocker arm oil control solenoid 1, rocker arm oil control solenoid 2, the rocker arm oil pressure switch, the rocker arm oil pressure sensor, and the PCM. If the PCM was updated, substitute a known-good PCM (see page 11-7), then go to step 29. If the PCM was substituted, go to step 1.

    NO△Go to step 31.

31. Monitor the OBD STATUS for DTC P1288 in the DTCs MENU with the HDS.

    Does the screen indicate PASSED?

    YES△If the PCM was updated, troubleshooting is complete. If the PCM was substituted, replace the original PCM (see page 11-238). If any other Temporary DTCs or DTCs were indicated in step 30, go to the indicated DTC's troubleshooting.■

    NO△If the screen indicates FAILED, check for poor connections or loose terminals at rocker arm oil control solenoid 1, rocker arm oil control solenoid 2, the rocker arm oil pressure switch, the rocker arm oil pressure sensor, and the PCM. If the PCM was updated, substitute a known-good PCM (see page 11-7), then go to step 29. If the PCM was substituted, go to step 1. If the screen indicates EXECUTING, keep testing until a result comes on. If the screen indicates OUT OF CONDITION, go to step 29.

DTC P1289: Rocker Arm Oil Pressure Sensor Stuck High

NOTE: Before you troubleshoot, record all freeze data and any on-board snapshot, and review the general troubleshooting information (see page 11-3).

1. Turn the ignition switch to LOCK (0).

2. Check the engine oil level.

   Is the level OK?

   YES△Go to step 3.

   NO△Adjust the engine oil to the proper level, then go to step 8.

3. Turn the ignition switch to ON (II).

4. Clear the DTC with the HDS.

5. Do the VTEC TEST in the INSPECTION MENU with the HDS.

   Is the result OK?

   YES△Intermittent failure, the system is OK at this time. Check for poor connections or loose terminals at rocker arm oil control solenoid 1, rocker arm oil control solenoid 2, the rocker arm oil pressure switch, the rocker arm oil pressure sensor, and the PCM.■

   NO△Go to step 6.

6. Turn the ignition switch to LOCK (0).

7. Replace the rocker arm oil pressure sensor (see page 11-317).

8. Turn the ignition switch to ON (II).

9. Reset the PCM with the HDS.

10. Do the PCM idle learn procedure (see page 11-333).

11. Do the VTEC TEST in the INSPECTION MENU with the HDS.

12. Check for Temporary DTCs or DTCs with the HDS.

    Is DTC P1289 indicated?

    YES△Check for poor connections or loose terminals at rocker arm oil control solenoid 1, rocker arm oil control solenoid 2, the rocker arm oil pressure switch, the rocker arm oil pressure sensor, and the PCM, then go to step 1.

    NO△Go to step 13.

13. Monitor the OBD STATUS for DTC P1289 in the DTCs MENU with the HDS.

    Does the screen indicate PASSED?

    YES△Troubleshooting is complete. If any other Temporary DTCs or DTCs were indicated in step 12, go to the indicated DTC's troubleshooting.■

    NO△If the screen indicates FAILED, check for poor connections or loose terminals at rocker arm oil control solenoid 1, rocker arm oil control solenoid 2, the rocker arm oil pressure switch, the rocker arm oil pressure sensor, and the PCM, then go to step 1. If the screen indicates EXECUTING, keep testing until a result comes on. If the screen indicates OUT OF CONDITION, go to step 11.

DTC Troubleshooting (cont'd)

DTC P128A: Valve Pause System (VPS) Stuck OFF

NOTE: Before you troubleshoot, record all freeze data and any on-board snapshot, and review the general troubleshooting information (see page 11-3).

1. Turn the ignition switch to ON (II).
2. Clear the DTC with the HDS.
3. Check for Temporary DTCs or DTCs with the HDS.

   Is DTC P1289 or P2651 indicated?

   YES△Go to the indicated DTC's troubleshooting. ■

   NO△Go to step 4.

4. Turn the ignition switch to LOCK (0).
5. Check the engine oil level.

   Is the level OK?

   YES△Go to step 6.

   NO△Adjust the engine oil to the proper level, then go to step 11.

6. Turn the ignition switch to ON (II).
7. Clear the DTC with the HDS.
8. Do the VTEC TEST in the INSPECTION MENU with the HDS.

   Is the result OK?

   YES△Intermittent failure, the system is OK at this time. Check for poor connections or loose terminals at rocker arm oil control solenoid 1, rocker arm oil control solenoid 2, the rocker arm oil pressure switch, the rocker arm oil pressure sensor, and the PCM. ■

   NO△Depending on the result, replace the appropriate part, then go to step 9:

   - ENGINE OIL PRESSURE SENSOR HIGH VOLTAGE: Rocker arm oil pressure sensor (see page 11-317)
   - ROCKER ARM OIL CONTROL SOLENOID 1 STUCK OFF: Rocker arm oil control valve (see page 11-317)

9. Turn the ignition switch to LOCK (0).

10. Reconnect all connectors.

11. Turn the ignition switch to ON (II).

12. Reset the PCM with the HDS.

13. Do the PCM idle learn procedure (see page 11-333).

14. Do the VTEC TEST in the INSPECTION MENU with the HDS.

15. Check for Temporary DTCs or DTCs with the HDS.

    Is DTC P128A indicated?

    YES△Check for poor connections or loose terminals at rocker arm oil control solenoid 1, rocker arm oil control solenoid 2, the rocker arm oil pressure switch, the rocker arm oil pressure sensor, and the PCM, then go to step 1.

    NO△Go to step 16.

16. Monitor the OBD STATUS for DTC P128A in the DTCs MENU with the HDS.

    Does the screen indicate PASSED?

    YES△Troubleshooting is complete. If any other Temporary DTCs or DTCs were indicated in step 15, go to the indicated DTC's troubleshooting.■

    NO△If the screen indicates FAILED, check for poor connections or loose terminals at rocker arm oil control solenoid 1, rocker arm oil control solenoid 2, the rocker arm oil pressure switch, the rocker arm oil pressure sensor, and the PCM, then go to step 1. If the screen indicates EXECUTING, keep testing until a result comes on. If the screen indicates OUT OF CONDITION, go to step 14.

DTC P128B: Valve Pause System (VPS) Malfunction

NOTE: Before you troubleshoot, record all freeze data and any on-board snapshot, and review the general troubleshooting information (see page 11-3).

1. Turn the ignition switch to ON (II).

2. Clear the DTC with the HDS.

3. Check for Temporary DTCs or DTCs with the HDS.

   Are DTC P128B and P1287 indicated at the same time?

   YES△Go to troubleshooting for DTC P1287.■

   NO△Go to step 4.

4. Turn the ignition switch to LOCK (0).

5. Check the engine oil level.

   Is the level OK?

   YES△Go to step 6.

   NO△Adjust the engine oil to the proper level, then go to step 23.

6. Turn the ignition switch to ON (II).

7. Clear the DTC with the HDS.

(cont'd)

DTC Troubleshooting (cont'd)

8. Do the VTEC TEST in the INSPECTION MENU with the HDS.

   Is the result OK?

   YES△Intermittent failure, the system is OK at this time. Check for poor connections or loose terminals at rocker arm oil control solenoid 1, rocker arm oil control solenoid 2, the rocker arm oil pressure switch, the rocker arm oil pressure sensor, and the PCM. ■

   NO△Depending on the result, go to the appropriate step:

   - ROCKER ARM OIL CONTROL SOLENOID 2 STUCK OFF: Go to step 9.
   - ROCKER ARM OIL PRESSURE SWITCH HIGH VOLTAGE: Go to step 11.

9. Turn the ignition switch to LOCK (0).

10. Replace the rocker arm oil control valve (see page 11-317), then go to step 23.

11. Turn the ignition switch to LOCK (0).

12. Disconnect the rocker arm oil pressure switch 2P connector.

13. At the rocker arm oil pressure switch side, check for continuity between rocker arm oil pressure switch 2P connector terminals No. 1 and No. 2.

ROCKER ARM OIL PRESSURE SWITCH 2P CONNECTOR

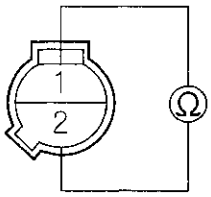

Terminal side of male terminals

Is there continuity?

YES△Go to step 14.

NO△Replace the rocker arm oil pressure switch (see page 11-318), then go to step 21.

14. Connect rocker arm oil pressure switch 2P connector terminal No. 2 to body ground with a jumper wire.

ROCKER ARM OIL PRESSURE SWITCH 2P CONNECTOR

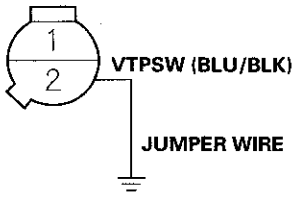

Wire side of female terminals

15. Turn the ignition switch to ON (II).

16. Check the ROCKER ARM OIL PRESSURE SWITCH in the DATA LIST with the HDS.

    Does it indicate ON?

    YES△Repair open in the wire between the rocker arm oil pressure switch and G102 (see page 22-16), then go to step 21.

    NO△Go to step 17.

17. Turn the ignition switch to LOCK (0).

18. Jump the SCS line with the HDS.

19. Disconnect PCM connector C (44P).

20. Check for continuity between rocker arm oil pressure switch 2P connector terminal No. 2 and PCM connector terminal C33.

ROCKER ARM OIL PRESSURE SWITCH 2P CONNECTOR

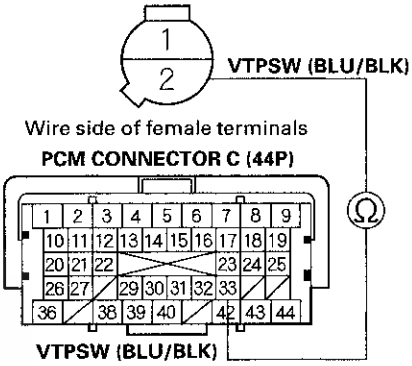

Is there continuity?

YES△Go to step 29.

NO△Repair open in the wire between the PCM (C33) and the rocker arm oil pressure switch, then go to step 21.

(cont'd)

DTC Troubleshooting (cont'd)

21. Turn the ignition switch to LOCK (0).

22. Reconnect all connectors.

23. Turn the ignition switch to ON (II).

24. Reset the PCM with the HDS.

25. Do the PCM idle learn procedure (see page 11-333).

26. Do the VTEC TEST in the INSPECTION MENU with the HDS.

27. Check for Temporary DTCs or DTCs with the HDS.

    Is DTC P128B indicated?

    YES△Check for poor connections or loose terminals at rocker arm oil control solenoid 1, rocker arm oil control solenoid 2, the rocker arm oil pressure switch, the rocker arm oil pressure sensor, and the PCM, then go to step 1.

    NO△Go to step 28.

28. Monitor the OBD STATUS for DTC P128B in the DTCs MENU with the HDS.

    Does the screen indicate PASSED?

    YES△Troubleshooting is complete. If any other Temporary DTCs or DTCs were indicated in step 27, go to the indicated DTC's troubleshooting.■

    NO△If the screen indicates FAILED, check for poor connections or loose terminals at rocker arm oil control solenoid 1, rocker arm oil control solenoid 2, the rocker arm oil pressure switch, the rocker arm oil pressure sensor, and the PCM, then go to step 1. If the screen indicates EXECUTING, keep testing until a result comes on. If the screen indicates OUT OF CONDITION, go to step 26.

29. Reconnect all connectors.

30. Update the PCM if it does not have the latest software (see page 11-236), or substitute a known-good PCM (see page 11-7).

31. Do the VTEC TEST in the INSPECTION MENU with the HDS.

32. Check for Temporary DTCs or DTCs with the HDS.

    Is DTC P128B indicated?

    YES△Check for poor connections or loose terminals at rocker arm oil control solenoid 1, rocker arm oil control solenoid 2, the rocker arm oil pressure switch, the rocker arm oil pressure sensor, and the PCM. If the PCM was updated, substitute a known-good PCM (see page 11-7), then go to step 31. If the PCM was substituted, go to step 1.

    NO△Go to step 33.

33. Monitor the OBD STATUS for DTC P128B in the DTCs MENU with the HDS.

    Does the screen indicate PASSED?

    YES△If the PCM was updated, troubleshooting is complete. If the PCM was substituted, replace the original PCM (see page 11-238). If any other Temporary DTCs or DTCs were indicated in step 32, go to the indicated DTC's troubleshooting.■

    NO△If the screen indicates FAILED, check for poor connections or loose terminals at rocker arm oil control solenoid 1, rocker arm oil control solenoid 2, the rocker arm oil pressure switch, the rocker arm oil pressure sensor, and the PCM. If the PCM was updated, substitute a known-good PCM (see page 11-7), then go to step 31. If the PCM was substituted, go to step 1. If the screen indicates EXECUTING, keep testing until a result comes on. If the screen indicates OUT OF CONDITION, go to step 31.

DTC P2647: VTEC System Stuck ON

NOTE: Before you troubleshoot, record all freeze data and any on-board snapshot, and review the general troubleshooting information (see page 11-3).

1. Turn the ignition switch to LOCK (0).
2. Check the engine oil level.

   Is the engine oil level OK?

   YES△Go to step 3.

   NO△Adjust the engine oil to the proper level, then go to step 8.
3. Turn the ignition switch to ON (II).
4. Clear the DTC with the HDS.
5. Do the VTEC TEST in the INSPECTION MENU with the HDS.

   Is the result OK?

   YES△Intermittent failure, the system is OK at this time. Check for poor connections or loose terminals at rocker arm oil control solenoid 1, rocker arm oil control solenoid 2, the rocker arm oil pressure switch, the rocker arm oil pressure sensor, and the PCM.■

   NO△Go to step 6.
6. Turn the ignition switch to LOCK (0).
7. Replace the rocker arm oil control valve (see page 11-317).
8. Turn the ignition switch to ON (II).
9. Reset the PCM with the HDS.
10. Do the PCM idle learn procedure (see page 11-333).
11. Do the VTEC TEST in the INSPECTION MENU with the HDS.
12. Check for Temporary DTCs or DTCs with the HDS.

    Is DTC P2647 indicated?

    YES△Check for poor connections or loose terminals at rocker arm oil control solenoid 1, rocker arm oil control solenoid 2, the rocker arm oil pressure switch, the rocker arm oil pressure sensor, and the PCM, then go to step 1.

    NO△Go to step 13.
13. Monitor the OBD STATUS for DTC P2647 in the DTCs MENU with the HDS.

    Does the screen indicate PASSED?

    YES△Troubleshooting is complete. If any other Temporary DTCs or DTCs were indicated in step 12, go to the indicated DTC's troubleshooting.■

    NO△If the screen indicates FAILED, check for poor connections or loose terminals at rocker arm oil control solenoid 1, rocker arm oil control solenoid 2, the rocker arm oil pressure switch, the rocker arm oil pressure sensor, and the PCM, then go to step 1. If the screen indicates EXECUTING, keep testing until a result comes on. If the screen indicates OUT OF CONDITION, go to step 11.

DTC Troubleshooting (cont'd)

DTC P2648: Rocker Arm Oil Control Solenoid 2 Circuit Low Voltage

NOTE: Before you troubleshoot, record all freeze data and any on-board snapshot, and review the general troubleshooting information (see page 11-3).

1. Turn the ignition switch to ON (II).
2. Clear the DTC with the HDS.
3. Do the VTEC TEST in the INSPECTION MENU with the HDS.
4. Check for Temporary DTCs or DTCs with the HDS.

   Is DTC P2648 indicated?

   YES△Intermittent failure, the system is OK at this time. Check for poor connections or loose terminals at rocker arm oil control solenoid 2 and the PCM. ■

   NO△Go to step 5.
5. Turn the ignition switch to LOCK (0).
6. Disconnect rocker arm oil control solenoid 2 2P connector.
7. At the solenoid side, measure the resistance between rocker arm oil control solenoid 2 2P connector terminals No. 1 and No. 2.

ROCKER ARM OIL CONTROL SOLENOID 2 2P CONNECTOR

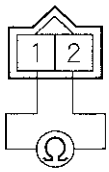

Terminal side of male terminals

Is there 14–30 Ω at room temperature?

YES△Go to step 8.

NO△Go to step 11.

8. Jump the SCS line with the HDS.
9. Disconnect PCM connector B (44P).
10. Check for continuity between PCM connector terminal B26 and body ground.

PCM CONNECTOR B (44P)

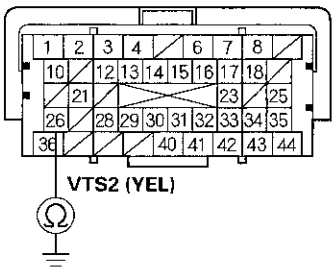

Terminal side of female terminals

Is there continuity?

YES△Repair short in the wire between the PCM (B26) and rocker arm oil control solenoid 2, then go to step 12.

NO△Go to step 19.

11. Replace the rocker arm oil control valve (see page 11-317).
12. Reconnect all connectors.
13. Turn the ignition switch to ON (II).
14. Reset the PCM with the HDS.
15. Do the PCM idle learn procedure (see page 11-333).
16. Do the VTEC TEST in the INSPECTION MENU with the HDS.
17. Check for Temporary DTCs or DTCs with the HDS.

    Is DTC P2648 indicated?

    YES△Check for poor connections or loose terminals at rocker arm oil control solenoid 2 and the PCM, then go to step 1.

    NO△Go to step 18.

18. Monitor the OBD STATUS for DTC P2648 in the DTCs MENU with the HDS.

    Does the screen indicate PASSED?

    YES△Troubleshooting is complete. If any other Temporary DTCs or DTCs were indicated in step 17, go to the indicated DTC's troubleshooting.■

    NO△If the screen indicates FAILED, go to step 1 and recheck. If the screen indicates NOT COMPLETED, go to step 16.

19. Reconnect all connectors.

20. Update the PCM if it does not have the latest software (see page 11-236), or substitute a known-good PCM (see page 11-7).

21. Do the VTEC TEST in the INSPECTION MENU with the HDS.

22. Check for Temporary DTCs or DTCs with the HDS.

    Is DTC P2648 indicated?

    YES△Check for poor connections or loose terminals at rocker arm oil control solenoid 2 and the PCM. If the PCM was updated, substitute a known-good PCM (see page 11-7), then go to step 21. If the PCM was substituted, go to step 1.

    NO△Go to step 23.

23. Monitor the OBD STATUS for DTC P2648 in the DTCs MENU with the HDS.

    Does the screen indicate PASSED?

    YES△If the PCM was updated, troubleshooting is complete. If the PCM was substituted, replace the original PCM (see page 11-238). If any other Temporary DTCs or DTCs were indicated in step 22, go to the indicated DTC's troubleshooting.■

    NO△If the screen indicates FAILED, check for poor connections or loose terminals at rocker arm oil control solenoid 2 and the PCM. If the PCM was updated, substitute a known-good PCM (see page 11-7), then go to step 21. If the PCM was substituted, go to step 1. If the screen indicates NOT COMPLETED, go to step 21.

DTC P2649: Rocker Arm Oil Control Solenoid 2 Circuit High Voltage

NOTE: Before you troubleshoot, record all freeze data and any on-board snapshot, and review the general troubleshooting information (see page 11-3).

1. Turn the ignition switch to ON (II).

2. Clear the DTC with the HDS.

3. Do the VTEC TEST in the INSPECTION MENU with the HDS.

4. Check for Temporary DTCs or DTCs with the HDS.

   Is DTC P2649 indicated?

   YES△Go to step 5.

   NO△Intermittent failure, the system is OK at this time. Check for poor connections or loose terminals at rocker arm oil control solenoid 2 and the PCM.■

5. Turn the ignition switch to LOCK (0).

6. Disconnect rocker arm oil control solenoid 2 2P connector.

7. At the solenoid side, measure the resistance between rocker arm oil control solenoid 2 2P connector terminals No. 1 and No. 2.

ROCKER ARM OIL CONTROL SOLENOID 2 2P CONNECTOR

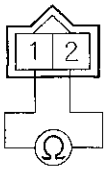

Terminal side of male terminals

Is there 14–30 Ω at room temperature?

YES△Go to step 8.

NO△Go to step 11.

(cont'd)

DTC Troubleshooting (cont'd)

8. Check for continuity between rocker arm oil control solenoid 2 2P connector terminal No. 1 and body ground.

ROCKER ARM OIL CONTROL SOLENOID 2 2P CONNECTOR

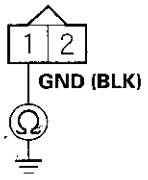

Wire side of female terminals

Is there continuity?

YES△Go to step 9.

NO△Repair open in the wire between rocker arm oil control solenoid 2 and G102 (see page 22-16), then go to step 13.

9. Jump the SCS line with the HDS.

10. Disconnect PCM connector B (44P).

11. Check for continuity between PCM connector terminal B26 and rocker arm oil control solenoid 2 2P connector terminal No. 2.

ROCKER ARM OIL CONTROL SOLENOID 2 2P CONNECTOR

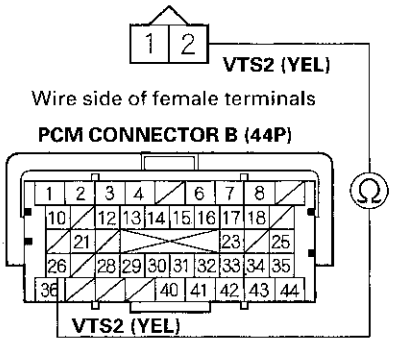

Wire side of female terminals

Terminal side of female terminals

Is there continuity?

YES△Go to step 20.

NO△Repair open in the wire between the PCM (B26) and rocker arm oil control solenoid 2, then go to step 13.

12. Replace the rocker arm oil control valve (see page 11-317).

13. Reconnect all connectors.

14. Turn the ignition switch to ON (II).

15. Reset the PCM with the HDS.

16. Do the PCM idle learn procedure (see page 11-333).

17. Do the VTEC TEST in the INSPECTION MENU with the HDS.

18. Check for Temporary DTCs or DTCs with the HDS.

    Is DTC P2649 indicated?

    YES△Check for poor connections or loose terminals at rocker arm oil control solenoid 2 and the PCM, then go to step 1.

    NO△Go to step 19.

19. Monitor the OBD STATUS for DTC P2649 in the DTCs MENU with the HDS.

    Does the screen indicate PASSED?

    YES△Troubleshooting is complete. If any other Temporary DTCs or DTCs were indicated in step 18, go to the indicated DTC's troubleshooting. ■

    NO△If the screen indicates FAILED, go to step 1 and recheck. If the screen indicates NOT COMPLETED, go to step 17.

20. Reconnect all connectors.

21. Update the PCM if it does not have the latest software (see page 11-236), or substitute a known-good PCM (see page 11-7).

22. Do the VTEC TEST in the INSPECTION MENU with the HDS.

23. Check for Temporary DTCs or DTCs with the HDS.

    Is DTC P2649 indicated?

    YES△Check for poor connections or loose terminals at rocker arm oil control solenoid 2 and the PCM. If the PCM was updated, substitute a known-good PCM (see page 11-7), then go to step 22. If the PCM was substituted, go to step 1.

    NO△Go to step 24.

24. Monitor the OBD STATUS for DTC P2649 in the DTCs MENU with the HDS.

    Does the screen indicate PASSED?

    YES△If the PCM was updated, troubleshooting is complete. If the PCM was substituted, replace the original PCM (see page 11-238). If any other Temporary DTCs or DTCs were indicated in step 23, go to the indicated DTC's troubleshooting. ■

    NO△If the screen indicates FAILED, check for poor connections or loose terminals at the rocker arm oil control solenoid 2 and the PCM. If the PCM was updated, substitute a known-good PCM (see page 11-7), then go to step 22. If the PCM was substituted, go to step 1. If the screen indicates NOT COMPLETED, go to step 22.

DTC Troubleshooting (cont'd)

DTC P2651: Valve Pause System (VPS) Stuck OFF

NOTE: Before you troubleshoot, record all freeze data and any on-board snapshot, and review the general troubleshooting information (see page 11-3).

1. Turn the ignition switch to LOCK (0).
2. Check the engine oil level.

   Is the engine oil level OK?

   YES△Go to step 3.

   NO△Adjust the engine oil to the proper level, then go to step 8.
3. Turn the ignition switch to ON (II).
4. Clear the DTC with the HDS.
5. Do the VTEC TEST in the INSPECTION MENU with the HDS.

   Is the result OK?

   YES△Intermittent failure, the system is OK at this time. Check for poor connections or loose terminals at rocker arm oil control solenoid 1, rocker arm oil control solenoid 2, the rocker arm oil pressure switch, the rocker arm oil pressure sensor, and the PCM.■

   NO△Go to step 6.
6. Turn the ignition switch to LOCK (0).
7. Replace the rocker arm oil control valve (see page 11-317).
8. Turn the ignition switch to ON (II).
9. Reset the PCM with the HDS.
10. Do the PCM idle learn procedure (see page 11-333).
11. Do the VTEC TEST in the INSPECTION MENU with the HDS.
12. Check for Temporary DTCs or DTCs with the HDS.

    Is DTC P2651 indicated?

    YES△Check for poor connections or loose terminals at rocker arm oil control solenoid 1, rocker arm oil control solenoid 2, the rocker arm oil pressure switch, the rocker arm oil pressure sensor, and the PCM, then go to step 1.

    NO△Go to step 13.
13. Monitor the OBD STATUS for DTC P2651 in the DTCs MENU with the HDS.

    Does the screen indicate PASSED?

    YES△Troubleshooting is complete. If any other Temporary DTCs or DTCs were indicated in step 12, go to the indicated DTC's troubleshooting.■

    NO△If the screen indicates FAILED, check for poor connections or loose terminals at rocker arm oil control solenoid 1, rocker arm oil control solenoid 2, the rocker arm oil pressure switch, the rocker arm oil pressure sensor, and the PCM, then go to step 1. If the screen indicates EXECUTING, keep testing until a result comes on. If the screen indicates OUT OF CONDITION, go to step 11.

DTC P2652: Valve Pause System (VPS) Stuck ON

Special Tools Required
- Pressure gauge adapter 07NAJ-P07010A
- A/T low pressure gauge w/panel 07406-0070301
- A/T pressure hose 07406-0020201
- A/T pressure hose, 2,210 mm 07MAJ-PY4011A
- A/T pressure adaptor 07MAJ-PY40120
- Oil pressure hose 07ZAJ-S5AA200

NOTE: Before you troubleshoot, record all freeze data and any on-board snapshot, and review the general troubleshooting information (see page 11-3).

1. Turn the ignition switch to LOCK (0).

2. Check the engine oil level.

   Is the engine oil level OK?

   YES△Go to step 3.

   NO△Adjust the engine oil to the proper level, then go to step 14.

3. Turn the ignition switch to ON (II).

4. Clear the DTC with the HDS.

5. Do the VTEC TEST in the INSPECTION MENU with the HDS.

   Is the result OK?

   YES△Intermittent failure, the system is OK at this time. Check for poor connections or loose terminals at rocker arm oil control solenoid 1, rocker arm oil control solenoid 2, the rocker arm oil pressure switch, the rocker arm oil pressure sensor, and the PCM.■

   NO△Go to step 6.

6. Check for poor connections at the rocker arm oil pressure switch 2P connector.

   Are the connections OK?

   YES△Go to step 7.

   NO△Repair the poor connections at the rocker arm oil pressure switch 2P connector, then go to step 14.

7. Turn the ignition switch to LOCK (0).

8. Remove the rocker arm oil pressure switch (A), and attach the special tools as shown, then attach the rocker arm oil pressure switch to the pressure gauge adapter (B).

   NOTE: Install the parts in the reverse order of removal with a new O-ring.

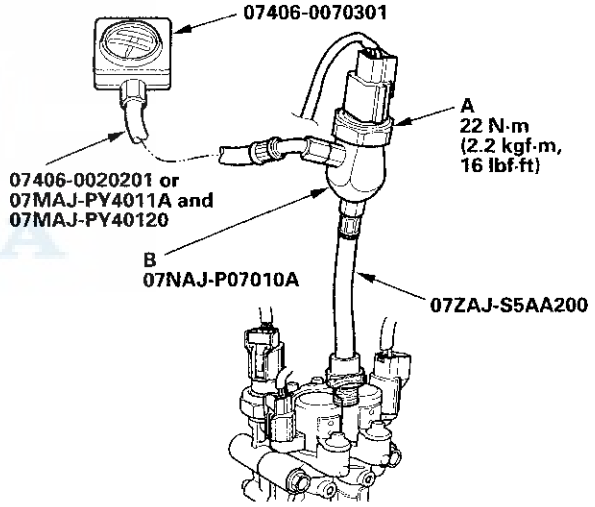

9. Reconnect the rocker arm oil pressure switch 2P connector.

10. Start the engine. Hold the engine speed at 3,000 rpm.

(cont'd)

DTC Troubleshooting (cont'd)

11. Check the oil pressure.

    Is the oil pressure above 0 kPa (0 kgf/cm², 0 psi)?

    YES△Replace the rocker arm oil control valve (see page 11-317), then go to step 12.

    NO△Replace the rocker arm oil pressure switch (see page 11-318), then go to step 12.

12. Turn the ignition switch to LOCK (0).

13. Reconnect all connectors.

14. Turn the ignition switch to ON (II).

15. Reset the PCM with the HDS.

16. Do the PCM idle learn procedure (see page 11-333).

17. Do the VTEC TEST in the INSPECTION MENU with the HDS.

18. Check for Temporary DTCs or DTCs with the HDS.

    Is DTC P2652 indicated?

    YES△Check for poor connections or loose terminals at rocker arm oil control solenoid 1, rocker arm oil control solenoid 2, the rocker arm oil pressure switch, the rocker arm oil pressure sensor, and the PCM, then go to step 1.

    NO△Go to step 19.

19. Monitor the OBD STATUS for DTC P2652 in the DTCs MENU with the HDS.

    Does the screen indicate PASSED?

    YES△Troubleshooting is complete. If any other Temporary DTCs or DTCs were indicated in step 18, go to the indicated DTC's troubleshooting.■

    NO△If the screen indicates FAILED, check for poor connections or loose terminals at rocker arm oil control solenoid 1, rocker arm oil control solenoid 2, the rocker arm oil pressure switch, the rocker arm oil pressure sensor, and the PCM, then go to step 1. If the screen indicates EXECUTING, keep testing until a result comes on. If the screen indicates OUT OF CONDITION, go to step 17.

DTC P2653: Rocker Arm Oil Control Solenoid 1 Circuit Low Voltage

NOTE: Before you troubleshoot, record all freeze data and any on-board snapshot, and review the general troubleshooting information (see page 11-3).

1. Turn the ignition switch to ON (II).

2. Clear the DTC with the HDS.

3. Do the VTEC TEST in the INSPECTION MENU with the HDS.

4. Check for Temporary DTCs or DTCs with the HDS.

   Is DTC P2648 indicated?

   YES△Intermittent failure, the system is OK at this time. Check for poor connections or loose terminals at rocker arm oil control solenoid 1 and the PCM.■

   NO△Go to step 5.

5. Turn the ignition switch to LOCK (0).

6. Disconnect the rocker arm oil control solenoid 1 2P connector.

7. At the solenoid side, measure the resistance between rocker arm oil control solenoid 1 2P connector terminals No. 1 and No. 2.

ROCKER ARM OIL CONTROL SOLENOID 1 2P CONNECTOR

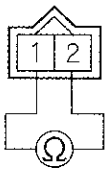

Terminal side of male terminals

Is there 14—30 Ω at room temperature?

YES△Go to step 8.

NO△Go to step 11.

8. Jump the SCS line with the HDS.

9. Disconnect PCM connector B (44P).

10. Check for continuity between PCM connector terminal B34 and body ground.

PCM CONNECTOR B (44P)

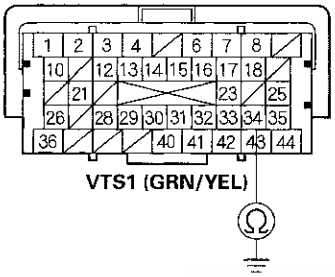

Terminal side of female terminals

Is there continuity?

YES△Repair short in the wire between the PCM (B34) and rocker arm oil control solenoid 1, then go to step 12.

NO△Go to step 19.

11. Replace the rocker arm oil control valve (see page 11-317).

12. Reconnect all connectors.

13. Turn the ignition switch to ON (II).

14. Reset the PCM with the HDS.

15. Do the PCM idle learn procedure (see page 11-333).

16. Do the VTEC TEST in the INSPECTION MENU with the HDS.

17. Check for Temporary DTCs or DTCs with the HDS.

Is DTC P2653 indicated?

YES△Check for poor connections or loose terminals at rocker arm oil control solenoid 1 and the PCM, then go to step 1.

NO△Go to step 18.

18. Monitor the OBD STATUS for DTC P2653 in the DTCs MENU with the HDS.

Does the screen indicate PASSED?

YES△Troubleshooting is complete. If any other Temporary DTCs or DTCs were indicated in step 17, go to the indicated DTC's troubleshooting. ■

NO△If the screen indicates FAILED, go to step 1 and recheck. If the screen indicates NOT COMPLETED, go to step 16.

19. Reconnect all connectors.

20. Update the PCM if it does not have the latest software (see page 11-236), or substitute a known-good PCM (see page 11-7).

21. Do the VTEC TEST in the INSPECTION MENU with the HDS.

22. Check for Temporary DTCs or DTCs with the HDS.

Is DTC P2653 indicated?

YES△Check for poor connections or loose terminals at rocker arm oil control solenoid 1 and the PCM. If the PCM was updated, substitute a known-good PCM (see page 11-7), then go to step 21. If the PCM was substituted, go to step 1.

NO△Go to step 23.

(cont'd)

DTC Troubleshooting (cont'd)

23. Monitor the OBD STATUS for DTC P2653 in the DTCs MENU with the HDS.

    Does the screen indicate PASSED?

    YES△If the PCM was updated, troubleshooting is complete. If the PCM was substituted, replace the original PCM (see page 11-238). If any other Temporary DTCs or DTCs were indicated in step 22, go to the indicated DTC's troubleshooting. ■

    NO△If the screen indicates FAILED, check for poor connections or loose terminals at rocker arm oil control solenoid 1 and the PCM. If the PCM was updated, substitute a known-good PCM (see page 11-7), then go to step 21. If the PCM was substituted, go to step 1. If the screen indicates NOT COMPLETED, go to step 21.

DTC P2654: Rocker Arm Oil Control Solenoid 1 Circuit High Voltage

NOTE: Before you troubleshoot, record all freeze data and any on-board snapshot, and review the general troubleshooting information (see page 11-3).

1. Turn the ignition switch to ON (II).
2. Clear the DTC with the HDS.
3. Do the VTEC TEST in the INSPECTION MENU with the HDS.
4. Check for Temporary DTCs or DTCs with the HDS.

   Is DTC P2654 indicated?

   YES△Go to step 5.

   NO△Intermittent failure, the system is OK at this time. Check for poor connections or loose terminals at rocker arm oil control solenoid 1 and the PCM. ■

5. Turn the ignition switch to LOCK (0).
6. Disconnect the rocker arm oil control solenoid 1 2P connector.
7. At the solenoid side, measure the resistance between rocker arm oil control solenoid 1 2P connector terminals No. 1 and No. 2.

ROCKER ARM OIL CONTROL SOLENOID 1 2P CONNECTOR

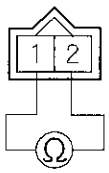

Terminal side of male terminals

Is there 14 - 30 Ω at room temperature?

YES△Go to step 8.

NO△Go to step 11.

8. Check for continuity between rocker arm oil control solenoid 1 2P connector terminal No. 2 and body ground.

ROCKER ARM OIL CONTROL SOLENOID 1 2P CONNECTOR

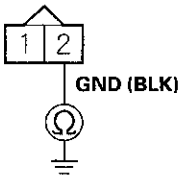

Wire side of female terminals

Is there continuity?

YES△Go to step 9.

NO△Repair open in the wire between rocker arm oil control solenoid 1 and G102 (see page 22-16), then go to step 13.

9. Jump the SCS line with the HDS.

10. Disconnect PCM connector B (44P).

11. Check for continuity between PCM connector terminal B34 and rocker arm oil control solenoid 1 2P connector terminal No. 1.

ROCKER ARM OIL CONTROL SOLENOID 1 2P CONNECTOR

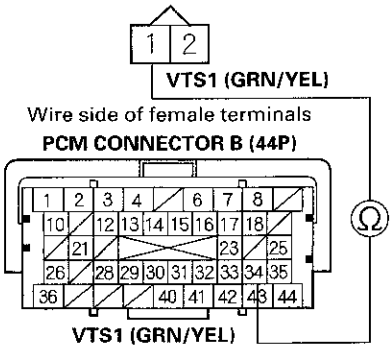

Terminal side of female terminals

Is there continuity?

YES△Go to step 20.

NO△Repair open in the wire between the PCM (B34) and rocker arm oil control solenoid 1, then go to step 13.

12. Replace the rocker arm oil control valve (see page 11-317).

13. Reconnect all connectors.

14. Turn the ignition switch to ON (II).

15. Reset the PCM with the HDS.

16. Do the PCM idle learn procedure (see page 11-333).

17. Do the VTEC TEST in the INSPECTION MENU with the HDS.

18. Check for Temporary DTCs or DTCs with the HDS.

Is DTC P2654 indicated?

YES△Check for poor connections or loose terminals at rocker arm oil control solenoid 1 and the PCM, then go to step 1.

NO△Go to step 19.

(cont'd)

DTC Troubleshooting (cont'd)

19. Monitor the OBD STATUS for DTC P2654 in the DTCs MENU with the HDS.

    Does the screen indicate PASSED?

    YES△Troubleshooting is complete. If any other Temporary DTCs or DTCs were indicated in step 18, go to the indicated DTC's troubleshooting. ■

    NO△If the screen indicates FAILED, go to step 1 and recheck. If the screen indicates NOT COMPLETED, go to step 17.

20. Reconnect all connectors.

21. Update the PCM if it does not have the latest software (see page 11-236), or substitute a known-good PCM (see page 11-7).

22. Do the VTEC TEST in the INSPECTION MENU with the HDS.

23. Check for Temporary DTCs or DTCs with the HDS.

    Is DTC P2654 indicated?

    YES△Check for poor connections or loose terminals at rocker arm oil control solenoid 1 and the PCM. If the PCM was updated, substitute a known-good PCM (see page 11-7), then go to step 22. If the PCM was substituted, go to step 1.

    NO△Go to step 24.

24. Monitor the OBD STATUS for DTC P2649 in the DTCs MENU with the HDS.

    Does the screen indicate PASSED?

    YES△If the PCM was updated, troubleshooting is complete. If the PCM was substituted, replace the original PCM (see page 11-238). If any other Temporary DTCs or DTCs were indicated in step 23, go to the indicated DTC's troubleshooting. ■

    NO△If the screen indicates FAILED, check for poor connections or loose terminals at the rocker arm oil control solenoid 1 and the PCM. If the PCM was updated, substitute a known-good PCM (see page 11-7), then go to step 22. If the PCM was substituted, go to step 1. If the screen indicates NOT COMPLETED, go to step 22.

DTC P3400: Valve Pause System (VPS) Stuck OFF

NOTE: Before you troubleshoot, record all freeze data and any on-board snapshot, and review the general troubleshooting information (see page 11-3).

1. Turn the ignition switch to ON (II).

2. Clear the DTC with the HDS.

3. Check for Temporary DTCs or DTCs with the HDS.

   Are DTC P3400 and P1287, P1289, P128A, P128B, or P2651 indicated at the same time?

   YES△Go to the indicated DTC's troubleshooting.■

   NO△Go to step 4.

4. Turn the ignition switch to LOCK (0).

5. Check the engine oil level.

   Is the engine oil level OK?

   YES△Go to step 6.

   NO△Adjust the engine oil to the proper level, then go to step 26.

6. Turn the ignition switch to ON (II).

7. Clear the DTC with the HDS.

8. Do the VTEC TEST in the INSPECTION MENU with the HDS.

   Is the result OK?

   YES△Intermittent failure, the system is OK at this time. Check for poor connections or loose terminals at rocker arm oil control solenoid 1, rocker arm oil control solenoid 2, the rocker arm oil pressure switch, the rocker arm oil pressure sensor, and the PCM.■

   NO△Depending on the result, go to the appropriate step:

   - ENGINE OIL PRESSURE SENSOR HIGH VOLTAGE: Go to step 9.
   - ROCKER ARM OIL PRESSURE SWITCH HIGH VOLTAGE: Go to step 11.

9. Turn the ignition switch to LOCK (0).

10. Replace the rocker arm oil pressure sensor (see page 11-317), then go to step 21.

(cont'd)

DTC Troubleshooting (cont'd)

11. Turn the ignition switch to LOCK (0).

12. Disconnect the rocker arm oil pressure switch 2P connector.

13. At the rocker arm oil pressure switch side, check for continuity between rocker arm oil pressure switch 2P connector terminals No. 1 and No. 2.

ROCKER ARM OIL PRESSURE SWITCH 2P CONNECTOR

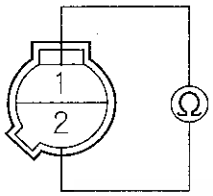

Terminal side of male terminals

Is there continuity?

YES△Go to step 14.

NO△Replace the rocker arm oil pressure switch (see page 11-318), then go to step 21.

14. Connect rocker arm oil pressure switch 2P connector terminal No. 2 to body ground with a jumper wire.

ROCKER ARM OIL PRESSURE SWITCH 2P CONNECTOR

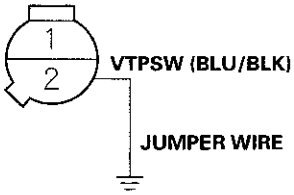

Wire side of female terminals

15. Turn the ignition switch to ON (II).

16. Check the ROCKER ARM OIL PRESSURE SWITCH in the DATA LIST with the HDS.

Does it indicate ON?

YES△Repair open in the wire between the rocker arm oil pressure switch and G102 (see page 22-16), then go to step 21.

NO△Go to step 17.

17. Turn the ignition switch to LOCK (0).

18. Jump the SCS line with the HDS.

19. Disconnect PCM connector C (44P).

20. Check for continuity between rocker arm oil pressure switch 2P connector terminal No. 2 and PCM connector terminal C33.

ROCKER ARM OIL PRESSURE SWITCH 2P CONNECTOR

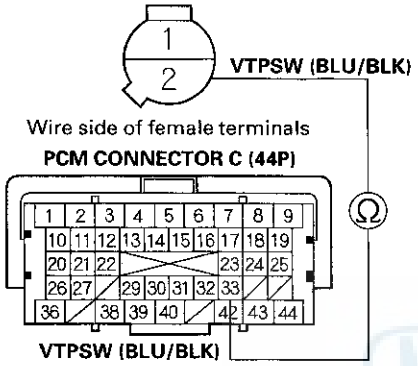

Is there continuity?

YES△Go to step 32.

NO△Repair open in the wire between the PCM (C33) and the rocker arm oil pressure switch, then go to step 21.

21. Turn the ignition switch to ON (II).

22. Clear the DTC with the HDS.

23. Do the VTEC TEST in the INSPECTION MENU with the HDS.

Is the result OK?

YES△Troubleshooting is complete.■

NO△Depending on the result, replace the appropriate part, then go to step 24:

- ENGINE OIL PRESSURE SENSOR HIGH VOLTAGE: Rocker arm oil pressure sensor (see page 11-317)
- ROCKER ARM OIL CONTROL SOLENOID 2 STUCK OFF: Rocker arm oil control valve (see page 11-317)
- ROCKER ARM OIL CONTROL SOLENOID 1 STUCK OFF: Rocker arm oil control valve (see page 11-317)

(cont'd)

DTC Troubleshooting (cont'd)

24. Turn the ignition switch to LOCK (0).

25. Reconnect all connectors.

26. Turn the ignition switch to ON (II).

27. Reset the PCM with the HDS.

28. Do the PCM idle learn procedure (see page 11-333).

29. Do the VTEC TEST in the INSPECTION MENU with the HDS.

30. Check for Temporary DTCs or DTCs with the HDS.

    Is DTC P3400 indicated?

    YES△Check for poor connections or loose terminals at rocker arm oil control solenoid 1, rocker arm oil control solenoid 2, the rocker arm oil pressure switch, the rocker arm oil pressure sensor, and the PCM, then go to step 1.

    NO△Go to step 31.

31. Monitor the OBD STATUS for DTC P3400 in the DTCs MENU with the HDS.

    Does the screen indicate PASSED?

    YES△Troubleshooting is complete. If any other Temporary DTCs or DTCs were indicated in step 30, go to the indicated DTC's troubleshooting. ■

    NO△If the screen indicates FAILED, check for poor connections or loose terminals at rocker arm oil control solenoid 1, rocker arm oil control solenoid 2, the rocker arm oil pressure switch, the rocker arm oil pressure sensor, and the PCM, then go to step 1. If the screen indicates EXECUTING, keep testing until a result comes on. If the screen indicates OUT OF CONDITION, go to step 29.

32. Reconnect all connectors.

33. Update the PCM if it does not have the latest software (see page 11-236), or substitute a known-good PCM (see page 11-7).

34. Do the VTEC TEST in the INSPECTION MENU with the HDS.

35. Check for Temporary DTCs or DTCs with the HDS.

    Is DTC P3400 indicated?

    YES△Check for poor connections or loose terminals at rocker arm oil control solenoid 1, rocker arm oil control solenoid 2, the rocker arm oil pressure switch, the rocker arm oil pressure sensor, and the PCM. If the PCM was updated, substitute a known-good PCM (see page 11-7), then go to step 34. If the PCM was substituted, go to step 1.

    NO△Go to step 36.

36. Monitor the OBD STATUS for DTC P3400 in the DTCs MENU with the HDS.

    Does the screen indicate PASSED?

    YES△If the PCM was updated, troubleshooting is complete. If the PCM was substituted, replace the original PCM (see page 11-238). If any other Temporary DTCs or DTCs were indicated in step 35, go to the indicated DTC's troubleshooting. ■

    NO△If the screen indicates FAILED, check for poor connections or loose terminals at rocker arm oil control solenoid 1, rocker arm oil control solenoid 2, the rocker arm oil pressure switch, the rocker arm oil pressure sensor, and the PCM. If the PCM was updated, substitute a known-good PCM (see page 11-7), then go to step 33. If the PCM was substituted, go to step 1. If the screen indicates EXECUTING, keep testing until a result comes on. If the screen indicates OUT OF CONDITION, go to step 34.

Rocker Arm Oil Control Valve Removal/Installation

1. Remove the intake manifold (see page 9-2).

2. Disconnect the rocker arm oil control solenoid 1 connector (A), the rocker arm oil control solenoid 2 connector (B), the rocker arm oil pressure switch connector (C), and the rocker arm oil pressure sensor connector (D).

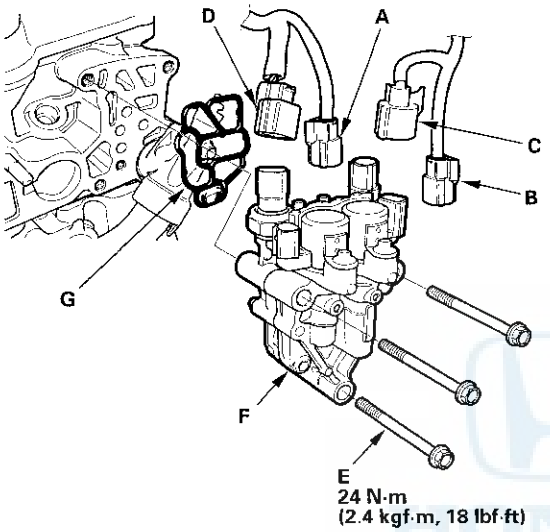

3. Remove the bolts (E).

4. Remove the rocker arm oil control valve (F).

5. Install the parts in the reverse order of removal with a new rocker arm oil control valve filter (G).

Rocker Arm Oil Pressure Sensor Removal/Installation

1. Disconnect the rocker arm oil pressure sensor connector (A).

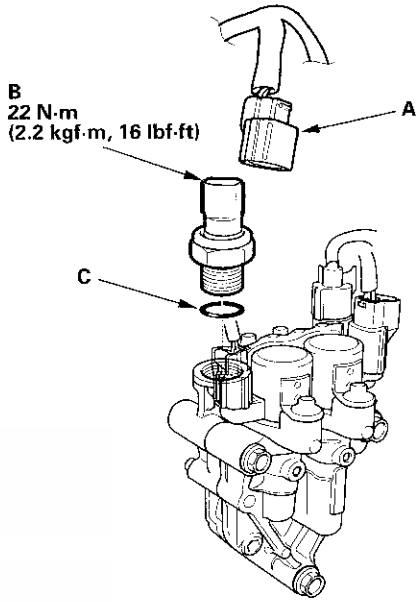

2. Remove the rocker arm oil pressure sensor (B).

3. Install the parts in the reverse order of removal with a new O-ring (C).

Rocker Arm Oil Pressure Switch Removal/Installation

1. Disconnect the rocker arm oil pressure switch connector (A).

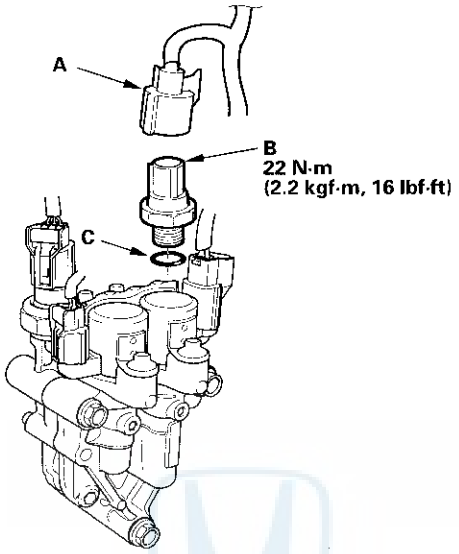

2. Remove the rocker arm oil pressure switch (B).
3. Install the parts in the reverse order of removal with a new O-ring (C).

Component Location Index

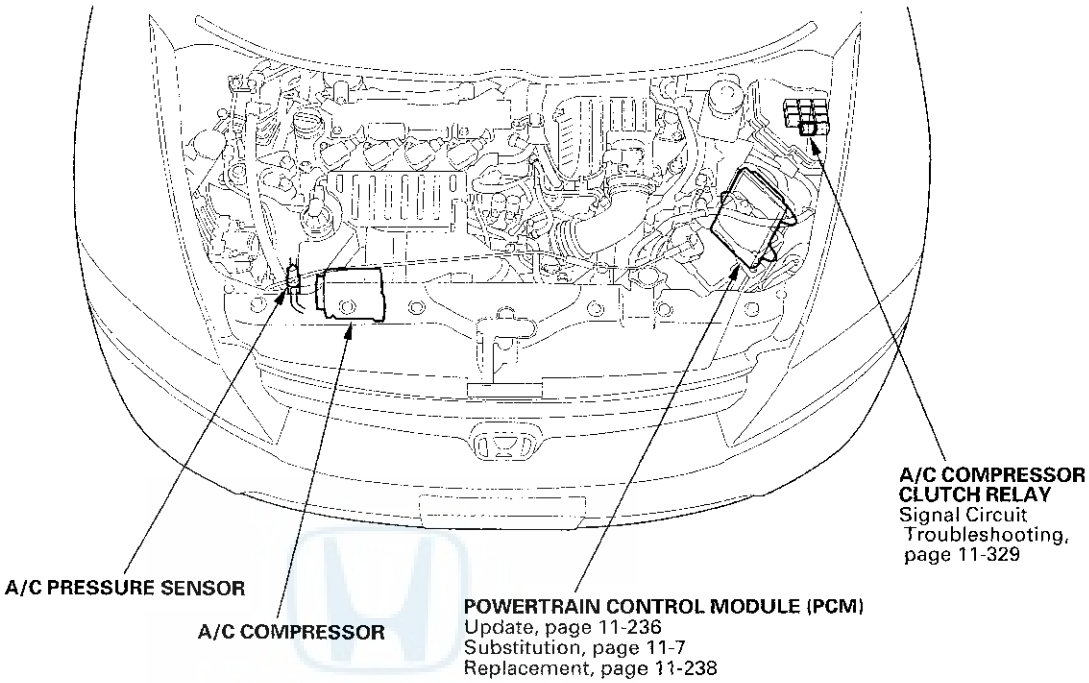

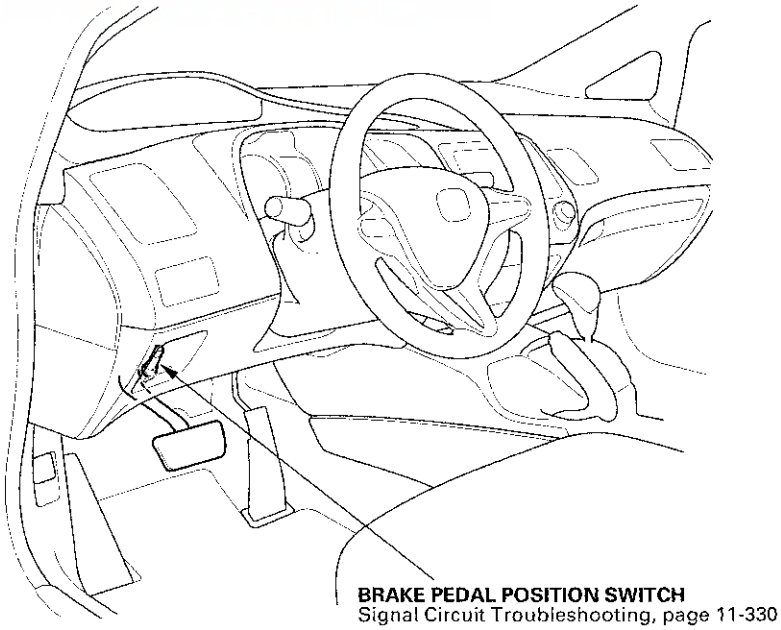

DTC Troubleshooting

DTC P0506: Idle Control System RPM Lower Than Expected

NOTE: Before you troubleshoot, record all freeze data and any on-board snapshot, and review the general troubleshooting information (see page 11-3).

1. Turn the ignition switch to ON (II).

2. Clear the DTC with the HDS.

3. Start the engine. Hold the engine speed at 3,000 rpm without load (in P or N) until the radiator fan comes on, then let it idle.

4. Check under these DATA LIST parameter conditions with the HDS:

   - ECT SENSOR 1 above 156 °F (70 °C)
   - IAT SENSOR above 32 °F (0 °C)
   - VSS is 0 mph (0 km/h)
   - ST FUEL TRIM between 0.73—1.47
   - FSS is CLOSED

5. Monitor the OBD STATUS for DTC P0506 in the DTCs MENU with the HDS.

   Does the screen indicate FAILED?

   YES△Go to step 6.

   NO△If the screen indicates PASSED, go to step 15. If the screen indicates EXECUTING, keep idling until a result comes on. If the screen indicates OUT OF CONDITION, go to step 4 and recheck.

6. Remove the intake air duct from the throttle body (see page 11-372).

7. Check for dirt, carbon, or damage in the throttle bore.

   Is there dirt, carbon, or damage in the throttle bore?

   YES△If there is dirt or carbon, clean the throttle body (see page 11-370). Also check for damage to the air cleaner element (see page 11-371), then go to step 9. If there is damage in the throttle bore, go to step 8.

   NO△Check the A/C system, then go to step 17.

8. Replace the throttle body (see page 11-372).

9. Reset the PCM with the HDS.

10. Do the PCM idle learn procedure (see page 11-333).

11. Start the engine. Hold the engine speed at 3,000 rpm without load (in P or N) until the radiator fan comes on, then let it idle.

12. Check under these DATA LIST parameter conditions with the HDS:

    - ECT SENSOR 1 above 156 °F (70 °C)
    - IAT SENSOR above 32 °F (0 °C)
    - VSS is 0 mph (0 km/h)
    - ST FUEL TRIM between 0.73—1.47
    - FSS is CLOSED

13. Check for Temporary DTCs or DTCs with the HDS.

    Is DTC P0506 indicated?

    YES△Go to step 19.

    NO△Go to step 14.

14. Monitor the OBD STATUS for DTC P0506 in the DTCs MENU with the HDS.

    Does the screen indicate PASSED?

    YES△Troubleshooting is complete. If any other Temporary DTCs or DTCs were indicated in step 13, go to the indicated DTC's troubleshooting.■

    NO△If the screen indicates FAILED, go to step 19. If the screen indicates EXECUTING, keep idling until a result comes on. If the screen indicates OUT OF CONDITION, go to step 11.

15. Remove the intake air duct from the throttle body (see page 11-370).

16. Check for dirt, carbon, or damage in the throttle bore.

    Is there dirt, carbon, or damage in the throttle bore?

    YES△If there is dirt or carbon, clean the throttle body (see page 11-370). Also check for damage to the air cleaner element (see page 11-371), then go to step 9. If there is damage in the throttle bore, go to step 8.

    NO△Go to step 17.

17. Recheck with different load conditions (turn on the headlights, blower motor, rear window defogger and/or A/C, change the gear position, etc.).

18. Monitor the OBD STATUS for DTC P0506 in the DTCs MENU with the HDS.

    Does the screen indicate PASSED?

    YES△Intermittent failure, the system is OK at this time.■

    NO△If the screen indicates FAILED, check the A/C system and/or power steering system, then go to step 1 and recheck. If the screen indicates EXECUTING, keep idling until a result comes on. If the screen indicates OUT OF CONDITION, go to step 17.

19. Update the PCM if it does not have the latest software (see page 11-236), or substitute a known-good PCM (see page 11-7).

20. Start the engine. Hold the engine speed at 3,000 rpm without load (in P or N) until the radiator fan comes on, then let it idle.

21. Check under these DATA LIST parameter conditions with the HDS:

    - ECT SENSOR 1 above 156 °F (70 °C)
    - IAT SENSOR above 32 °F (0 °C)
    - VSS is 0 mph (0 km/h)
    - ST FUEL TRIM between 0.73—1.47
    - FSS is CLOSED

22. Check for Temporary DTCs or DTCs with the HDS.

    Is DTC P0506 indicated?

    YES△Check for poor connections or loose terminals at the throttle body and the PCM. If the PCM was updated, substitute a known-good PCM (see page 11-7), then go to step 20. If the PCM was substituted, go to step 1.

    NO△Go to step 23.

23. Monitor the OBD STATUS for DTC P0506 in the DTCs MENU with the HDS.

    Does the screen indicate PASSED?

    YES△If the PCM was updated, troubleshooting is complete. If the PCM was substituted, replace the original PCM (see page 11-238). If any other Temporary DTCs or DTCs were indicated in step 22, go to the indicated DTC's troubleshooting.■

    NO△If the screen indicates FAILED, check for poor connections or loose terminals at the throttle body and the PCM. If the PCM was updated, substitute a known-good PCM (see page 11-7), then go to step 20. If the PCM was substituted, go to step 1. If the screen indicates EXECUTING, keep idling until a result comes on. If the screen indicates OUT OF CONDITION, go to step 20.

DTC Troubleshooting (cont'd)

DTC P0507: Idle Control System RPM Higher Than Expected

NOTE: Before you troubleshoot, record all freeze data and any on-board snapshot, and review the general troubleshooting information (see page 11-3).

1. Turn the ignition switch to ON (II).
2. Clear the DTC with the HDS.
3. Start the engine. Hold the engine speed at 3,000 rpm without load (in P or N) until the radiator fan comes on, then let it idle.
4. Monitor the OBD STATUS for DTC P0507 in the DTCs MENU with the HDS.

   Does the screen indicate FAILED?

   YES△Go to step 5.

   NO△If the screen indicates PASSED, intermittent failure, the system is OK at this time. If the screen indicates EXECUTING, keep idling until a result comes on. If the screen indicates OUT OF CONDITION, recheck with different load conditions (electrical, A/C, gear position, etc.), then go to step 3.

5. Check for vacuum leaks at these parts:

   - PCV valve
   - PCV hose
   - EVAP canister purge valve
   - Throttle body
   - Intake manifold

   Are there any leaks?

   YES△Repair or replace the leaking part(s), then go to step 6.

   NO△Go to step 6.

6. Turn the ignition switch to ON (II).
7. Reset the PCM with the HDS.
8. Do the PCM idle learn procedure (see page 11-333).
9. Start the engine. Hold the engine speed at 3,000 rpm without load (in P or N) until the radiator fan comes on, then let it idle.
10. Check for Temporary DTCs or DTCs with the HDS.

    Is DTC P0507 indicated?

    YES△Check for poor connections or loose terminals at the throttle body and the PCM, then go to step 1.

    NO△Go to step 11.

11. Monitor the OBD STATUS for DTC P0507 in the DTCs MENU with the HDS.

    Does the screen indicate PASSED?

    YES△Troubleshooting is complete. If any other Temporary DTCs or DTCs were indicated in step 10, go to the indicated DTC's troubleshooting. ■

    NO△If the screen indicates FAILED, go to step 12. If the screen indicates EXECUTING, keep idling until a result comes on. If the screen indicates OUT OF CONDITION, recheck with different load conditions (turn on the headlights, blower motor, or A/C; change the gear position, etc.), then go to step 9.

12. Update the PCM if it does not have the latest software (see page 11-236), or substitute a known-good PCM (see page 11-7).

13. Start the engine. Hold the engine speed at 3,000 rpm without load (in P or N) until the radiator fan comes on, then let it idle.

14. Check for Temporary DTCs or DTCs with the HDS.

    Is DTC P0507 indicated?

    YES△Check for poor connections or loose terminals at the throttle body and the PCM. If the PCM was updated, substitute a known-good PCM (see page 11-7), then go to step 13. If the PCM was substituted, go to step 1.

    NO△Go to step 15.

15. Monitor the OBD STATUS for DTC P0507 in the DTCs MENU with the HDS.

    Does the screen indicate PASSED?

    YES△If the PCM was updated, troubleshooting is complete. If the PCM was substituted, replace the original PCM (see page 11-238). If any other Temporary DTCs or DTCs were indicated in step 14, go to the indicated DTC's troubleshooting.■

    NO△If the screen indicates FAILED, check for poor connections or loose terminals at the throttle body and the PCM. If the PCM was updated, substitute a known-good PCM (see page 11-7), then go to step 13. If the PCM was substituted, go to step 1. If the screen indicates EXECUTING, keep idling until a result comes on. If the screen indicates OUT OF CONDITION, go to step 13.

DTC P0532: A/C Pressure Sensor Circuit Low Voltage

NOTE: Before you troubleshoot, record all freeze data and any on-board snapshot, and review the general troubleshooting information (see page 11-3).

1. Start the engine, and let it idle.

2. Turn the blower switch on.

3. Turn the A/C switch on.

4. Check the A/C PRESSURE SENSOR in the DATA LIST with the HDS.

   Is there about 0.3 V or less?

   YES△Go to step 5.

   NO△Intermittent failure, the system is OK at this time. Check for poor connections or loose terminals at the A/C pressure sensor and the PCM.■

5. Turn the ignition switch to LOCK (0).

6. Disconnect the A/C pressure sensor 3P connector.

7. Turn the ignition switch to ON (II).

8. Check the A/C PRESSURE SENSOR in the DATA LIST with the HDS.

   Is there about 0.3 V or less?

   YES△Go to step 10.

   NO△Go to step 9.

(cont'd)

DTC Troubleshooting (cont'd)

9. Measure the voltage between A/C pressure sensor 3P connector terminals No. 1 and No. 3.

A/C PRESSURE SENSOR 3P CONNECTOR

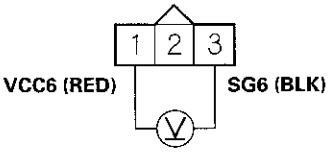

Wire side of female terminals

Is there about 5 V?

YES△Go to step 18.

NO△Go to step 14.

10. Turn the ignition switch to LOCK (0).
11. Jump the SCS line with the HDS.
12. Disconnect PCM connector A (44P).
13. Check for continuity between A/C pressure sensor 3P connector terminal No. 2 and body ground.

A/C PRESSURE SENSOR 3P CONNECTOR

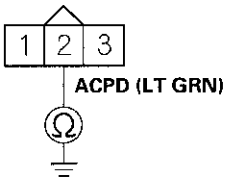

Wire side of female terminals

Is there continuity?

YES△Repair short in the wire between the PCM (A16) and the A/C pressure sensor, then go to step 20.

NO△Go to step 28.

14. Turn the ignition switch to LOCK (0).
15. Jump the SCS line with the HDS.
16. Disconnect PCM connector A (44P).
17. Check for continuity between A/C pressure sensor 3P connector terminal No. 1 and PCM connector terminal A19.

A/C PRESSURE SENSOR 3P CONNECTOR

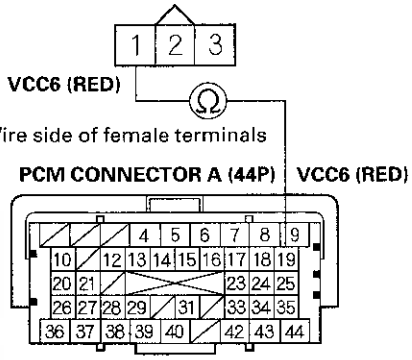

Wire side of female terminals

Terminal side of female terminals

Is there continuity?

YES△Go to step 28.

NO△Repair open in the wire between the PCM (A19) and the A/C pressure sensor, then go to step 20.

18. Turn the ignition switch to LOCK (0).
19. Replace the A/C pressure sensor (see page 21-9).
20. Reconnect all connectors.
21. Turn the ignition switch to ON (II).

22. Reset the PCM with the HDS.

23. Do the PCM idle learn procedure (see page 11-333).

24. Start the engine, and let it idle.

25. Turn the blower switch on.

26. Turn the A/C switch on.

27. Check for Temporary DTCs or DTCs with the HDS.

    Is DTC P0532 indicated?

    YES△Check for poor connections or loose terminals at the A/C pressure sensor and the PCM, then go to step 1.

    NO△Troubleshooting is complete. If any other Temporary DTCs or DTCs are indicated, go to the indicated DTC's troubleshooting.■

28. Reconnect all connectors.

29. Update the PCM if it does not have the latest software (see page 11-236), or substitute a known-good PCM (see page 11-7).

30. Start the engine, and let it idle.

31. Turn the blower switch on.

32. Turn the A/C switch on.

33. Check for Temporary DTCs or DTCs with the HDS.

    Is DTC P0532 indicated?

    YES△Check for poor connections or loose terminals at the A/C pressure sensor and the PCM. If the PCM was updated, substitute a known-good PCM (see page 11-7), then go to step 30. If the PCM was substituted, go to step 1.

    NO△If the PCM was updated, troubleshooting is complete. If the PCM was substituted, replace the original PCM (see page 11-238). If any other Temporary DTCs or DTCs are indicated, go to the indicated DTC's troubleshooting.■

DTC P0533: A/C Pressure Sensor Circuit High Voltage

NOTE: Before you troubleshoot, record all freeze data and any on-board snapshot, and review the general troubleshooting information (see page 11-3).

1. Start the engine, and let it idle.

2. Turn the blower switch on.

3. Turn the A/C switch on.

4. Check the A/C PRESSURE SENSOR in the DATA LIST with the HDS.

   Is there about 4.75 V or more?

   YES△Go to step 5.

   NO△Intermittent failure, the system is OK at this time. Check for poor connections or loose terminals at the A/C pressure sensor and the PCM.■

5. Turn the ignition switch to LOCK (0).

6. Disconnect the A/C pressure sensor 3P connector.

7. Connect A/C pressure sensor 3P connector terminals No. 2 and No. 3 with a jumper wire.

A/C PRESSURE SENSOR 3P CONNECTOR

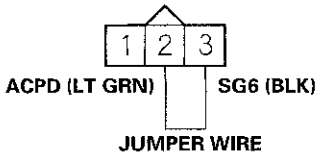

Wire side of female terminals

8. Turn the ignition switch to ON (II).

(cont'd)

DTC Troubleshooting (cont'd)

9. Check the A/C PRESSURE SENSOR in the DATA LIST with the HDS.

   Is there about 4.75 V or more?

   YES△Go to step 10.

   NO△Go to step 22.

10. Turn the ignition switch to LOCK (0).

11. Remove the jumper wire from the A/C pressure sensor 3P connector.

12. Turn the ignition switch to ON (II).

13. Measure the voltage between A/C pressure sensor 3P connector terminals No. 1 and No. 3.

A/C PRESSURE SENSOR 3P CONNECTOR

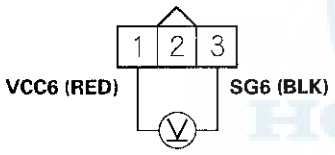

Wire side of female terminals

Is there about 5 V?

YES△Go to step 14.

NO△Go to step 18.

14. Turn the ignition switch to LOCK (0).

15. Jump the SCS line with the HDS.

16. Disconnect PCM connector A (44P).

17. Check for continuity between A/C pressure sensor 3P connector terminal No. 2 and PCM connector terminal A16.

A/C PRESSURE SENSOR 3P CONNECTOR

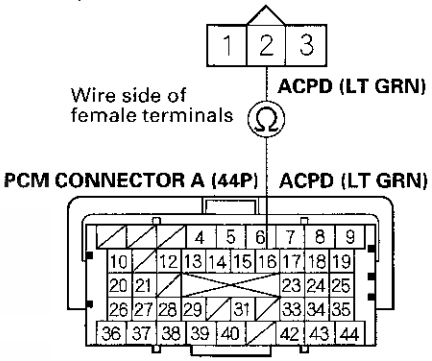

Terminal side of female terminals

Is there continuity?

YES△Go to step 32.

NO△Repair open in the wire between the PCM (A16) and the A/C pressure sensor, then go to step 24.

18. Turn the ignition switch to LOCK (0).

19. Jump the SCS line with the HDS.

20. Disconnect PCM connector A (44P).

21. Check for continuity between A/C pressure sensor 3P connector terminal No. 3 and PCM connector terminal A9.

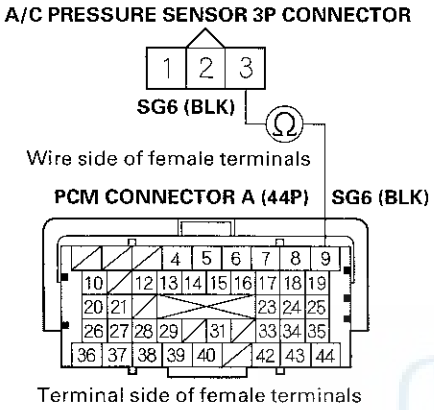

Is there continuity?

YES△Go to step 32.

NO△Repair open in the wire between the PCM (A9) and the A/C pressure sensor, then go to step 24.

22. Turn the ignition switch to LOCK (0).

23. Replace the A/C pressure sensor (see page 21-9).

24. Reconnect all connectors.

25. Turn the ignition switch to ON (II).

26. Reset the PCM with the HDS.

27. Do the PCM idle learn procedure (see page 11-333).

28. Start the engine, and let it idle.

29. Turn the blower switch on.

30. Turn the A/C switch on.

31. Check for Temporary DTCs or DTCs with the HDS.

Is DTC P0533 indicated?

YES△Check for poor connections or loose terminals at the A/C pressure sensor and the PCM, then go to step 1.

NO△Troubleshooting is complete. If any other Temporary DTCs or DTCs are indicated, go to the indicated DTC's troubleshooting. ■

(cont'd)

DTC Troubleshooting (cont'd)

32. Reconnect all connectors.

33. Update the PCM if it does not have the latest software (see page 11-236), or substitute a known-good PCM (see page 11-7).

34. Start the engine, and let it idle.

35. Turn the blower switch on.

36. Turn the A/C switch on.

37. Check for Temporary DTCs or DTCs with the HDS.

    Is DTC P0533 indicated?

    YES△Check for poor connections or loose terminals at the A/C pressure sensor and the PCM. If the PCM was updated, substitute a known-good PCM (see page 11-7), then go to step 34. If the PCM was substituted, go to step 1.

    NO△If the PCM was updated, troubleshooting is complete. If the PCM was substituted, replace the original PCM (see page 11-238). If any other Temporary DTCs or DTCs are indicated, go to the indicated DTC's troubleshooting.■

A/C Signal Circuit Troubleshooting

1. Start the engine, and let it idle.
2. Turn the blower switch on.
3. Turn the A/C switch on.
4. Check the A/C CLUTCH in the DATA LIST with the HDS.

   Does it indicate ON?

   YES△Go to step 5.

   NO△Do the A/C system test (see page 21-129).■

5. Check the A/C system.

   Does the A/C system operate?

   YES△The air conditioning system circuit is OK.■

   NO△Go to step 6.

6. Turn the ignition switch to LOCK (0).
7. Turn the ignition switch to ON (II).
8. Activate the A/C CLUTCH in the INSPECTION MENU with the HDS.

   Is there a clicking noise from the A/C compressor clutch?

   YES△Do the A/C system test (see page 21-129).■

   NO△Go to step 9.

9. Turn the ignition switch to LOCK (0).
10. Jump the SCS line with the HDS.
11. Disconnect PCM connector A (44P).
12. Turn the ignition switch to ON (II).
13. Momentarily connect PCM connector terminal A14 to body ground with a jumper wire several times.

PCM CONNECTOR A (44P)

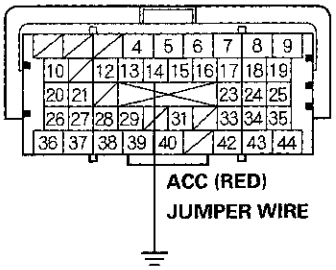

Terminal side of female terminals

Is there a clicking noise from the A/C compressor clutch?

YES△Update the PCM if it does not have the latest software (see page 11-236), or substitute a known-good PCM (see page 11-7), then recheck. If the symptom/indication goes away with a known-good PCM, replace the original PCM (see page 11-238).■

NO△Check for poor connections or loose terminals at the A/C clutch relay and the PCM. If the connections and terminals are OK, check the A/C clutch relay (see page 22-64). If needed, repair open in the wire between the PCM (A14) and the A/C clutch relay, the other A/C systems.■

Brake Pedal Position Switch Signal Circuit Troubleshooting

1. Turn the ignition switch to ON (II).

2. Check the BRAKE SWITCH in the DATA LIST with the HDS.

   Does it indicate OFF?

   YES△Go to step 3.

   NO△Inspect the brake pedal position switch (see page 19-6).■

3. Press the brake pedal while checking the BRAKE SWITCH in the DATA LIST with the HDS.

   Does it change to ON?

   YES△The brake pedal position switch signal circuit (BKSW line) is OK.■

   NO△Go to step 4.

4. Turn the ignition switch to LOCK (0).

5. Jump the SCS line with the HDS.

6. Disconnect the brake pedal position switch 4P connector.

7. Disconnect PCM connector A (44P).

8. Check for continuity between PCM connector terminal A40 and body ground.

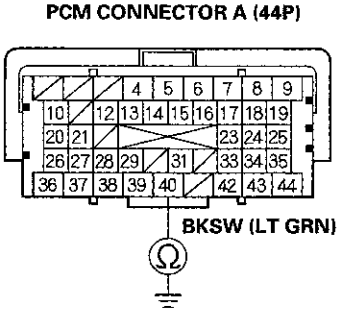

Terminal side of female terminals

Is there continuity?

YES△Repair short in the wire between the PCM (A40) and the No. 12 HORN & STOP (15 A) fuse. Also, replace the No. 12 HORN & STOP (15 A) fuse.■

NO△Go to step 9.

9. Connect brake pedal position switch 4P connector terminal No. 2 to body ground with a jumper wire.

BRAKE PEDAL POSITION SWITCH 4P CONNECTOR

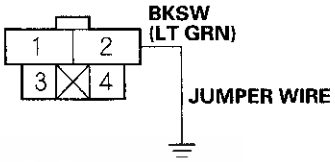

Wire side of female terminals

10. Check for continuity between PCM connector terminal A40 and body ground.

PCM CONNECTOR A (44P)

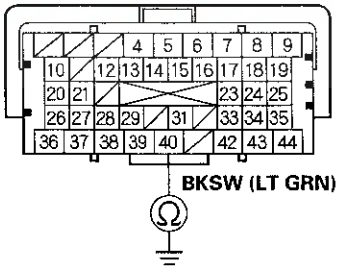

Terminal side of female terminals

Is there continuity?

YES△Repair open in the wire between the brake pedal position switch and the No. 12 HORN & STOP (15 A) fuse. Inspect the brake pedal position switch (see page 19-6).■

NO△Repair open in the wire between the PCM (A40) and the brake pedal position switch.■

Idle Speed Inspection

NOTE: Before checking the idle speed, check these items:
- The malfunction indicator lamp (MIL) has not been reported on, and there are no DTCs.
- Ignition timing
- Spark plugs
- Air cleaner
- PCV system
- Headlight OFF

1. Disconnect the evaporative emission (EVAP) canister purge valve connector.

2. Connect the HDS to the data link connector (DLC) (A) located under the driver's side of the dashboard.

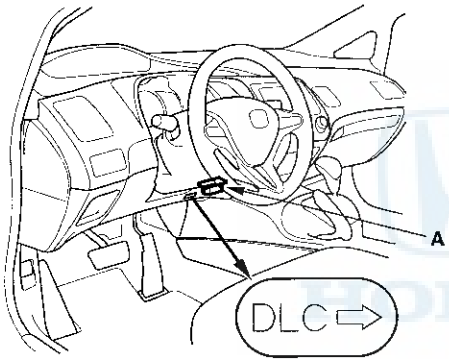

3. Make sure the HDS communicates with the PCM. If it doesn't, go to the DLC circuit troubleshooting (see page 11-213).

4. Start the engine. Hold the engine speed at 3,000 rpm without load (in P or N) until the radiator fan comes on, then let it idle.

5. Check the idle speed without load conditions: headlights, blower fan, radiator fan, and air conditioner off.

   Idle speed should be: 820±50 rpm (in P or N)

6. Let the engine idle for 1 minute with high electric load (A/C switch on, temperature set to max cool, blower fan on High, and headlights on high beam).

   Idle speed should be: 820±50 rpm (in P or N)

   NOTE: If the idle speed is not within specification, do the PCM idle learn procedure (see page 11-333). If the idle speed is still not within specification, go to symptom troubleshooting.

7. Reconnect the EVAP canister purge valve connector.

PCM Idle Learn Procedure

The idle learn procedure must be done so the PCM can learn the engine idle characteristics.

Do the idle learn procedure whenever you do any of these actions:

- Replace the PCM.
- Reset the PCM.
- Update the PCM.
- Replace or clean the throttle body.
- When the engine or transmission is disassembled.

NOTE: Clearing DTCs with the HDS does not require you to do the idle learn procedure.

Procedure

1. Make sure all electrical items (A/C, audio, lights, etc.) are off.

2. Reset the PCM with the HDS.

3. Turn the ignition switch ON (II), and wait 2 seconds.

4. Start the engine. Hold the engine speed at 3,000 rpm without load (in P or N) until the radiator fan comes on, or until the engine coolant temperature reaches 194 °F (90 °C).

5. Let the engine idle for about 5 minutes with the throttle fully closed.

   NOTE: If the radiator fan comes on, do not include its running time in the 5 minutes.

6. Verify on the HDS data list that the idle learn procedure is complete.

Component Location Index

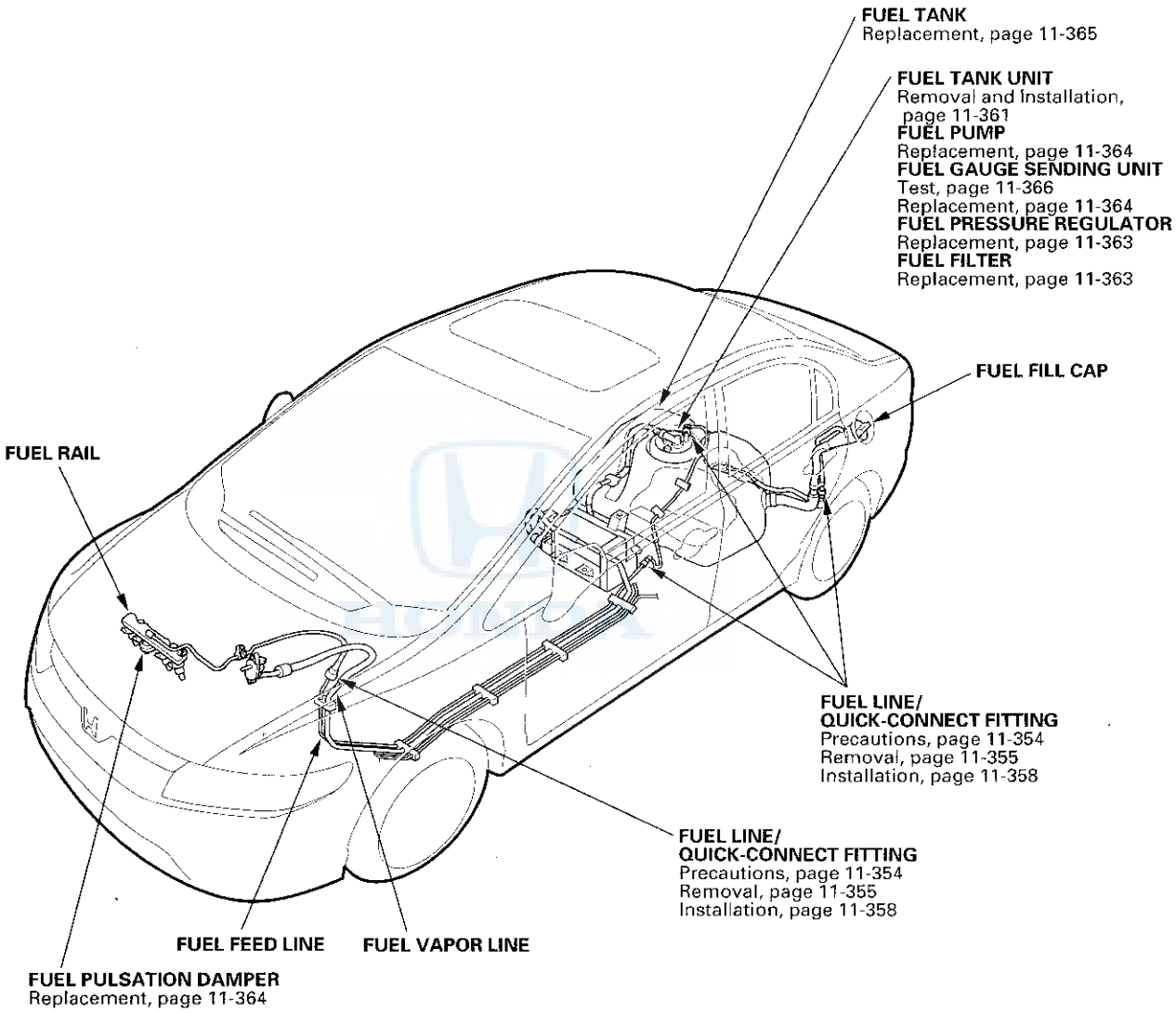

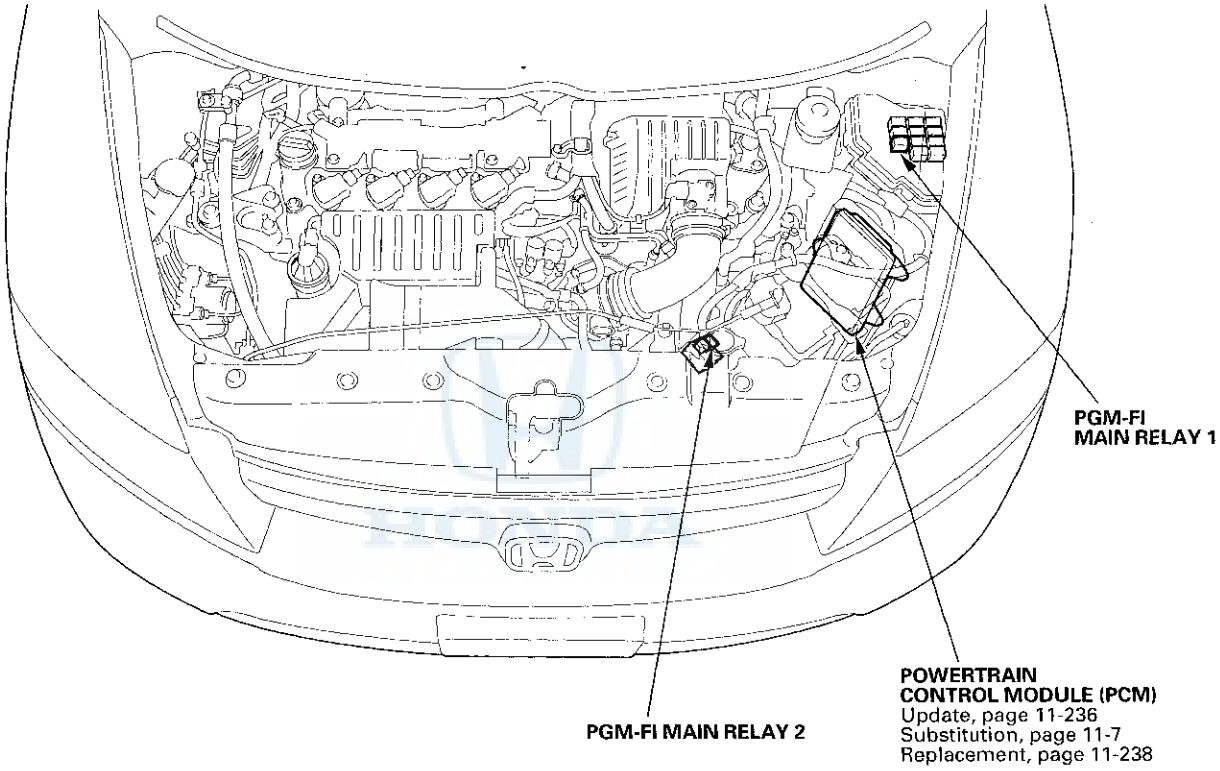
PGM-FI
MAIN RELAY 1
POWERTRAIN
CONTROL MODULE (PCM)
Update, page 11-236
Substitution, page 11-7
Replacement, page 11-238
PGM-FI MAIN RELAY 2

DTC Troubleshooting

DTC P0461: Fuel Level Sensor (Fuel Gauge Sending Unit) Range/Performance Problem

NOTE:
- Before you troubleshoot, record all freeze data and any on-board snapshot, and review the general troubleshooting information (see page 11-3).
- Because it requires 162 miles (260 km) of driving without refueling to complete this diagnosis, DTC P0461 cannot be duplicated during this troubleshooting.

1. Test the fuel gauge sending unit (see page 11-366).

   Is the fuel gauge sending unit OK?

   YES△Check for poor connections or loose terminals at the fuel gauge sending unit and the gauge control module (tach). ■

   NO△Replace the fuel gauge sending unit (see page 11-364), then go to step 2.

2. Turn the ignition switch to ON (II).

3. Reset the PCM with the HDS.

4. Do the PCM idle learn procedure (see page 11-333).

5. Check for Temporary DTCs or DTCs with the HDS.

   Are any Temporary DTCs or DTCs indicated?

   YES△Go to the indicated DTCs Troubleshooting.

   NO△Troubleshooting is complete. ■

DTC P0462: Fuel Level Sensor (Fuel Gauge Sending Unit) Circuit Low Voltage

NOTE: Before you troubleshoot, record all freeze data and any on-board snapshot, and review the general troubleshooting information (see page 11-3).

1. Turn the ignition switch to ON (II).

2. Clear the DTC with the HDS, and wait 5 seconds.

3. Check for Temporary DTCs or DTCs with the HDS.

   Is DTC P0462 indicated?

   YES△Go to step 4.

   NO△Intermittent failure, the system is OK at this time. Check for poor connections or loose terminals at the gauge control module (tach) and the fuel gauge sending unit. ■

4. Turn the ignition switch to LOCK (0).

5. Disconnect the fuel tank unit subharness 4P connector (see page 11-365).

6. Turn the ignition switch to ON (II).

7. Clear the DTC with the HDS, and wait 5 seconds.

8. Check for Temporary DTCs or DTCs with the HDS.

   Is DTC P0463 indicated?

   YES△Replace the fuel gauge sending unit (see page 11-364), then go to step 22.

   NO△Go to step 9.

9. Turn the ignition switch to LOCK (0).

10. Remove the gauge control module (tach) (see page 22-255).

11. Disconnect the gauge control module (tach) 36P connector.

12. Check for continuity between floor wire harness C651 4P connector terminal No. 1 and body ground.

FLOOR WIRE HARNESS C651 4P CONNECTOR

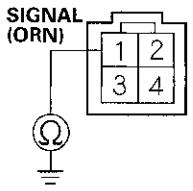

Terminal side of male terminals

Is there continuity?

YES△Repair short in the wire between the gauge control module (tach) (signal line) and the fuel tank unit subharness, then go to step 23.

NO△Go to step 13.

13. Remove the fuel tank (see page 11-365).

14. Check the fuel tank unit subharness for an open or short.

Is the harness OK?

YES△Go to step 15.

NO△Repair the fuel tank unit subharness, then go to step 22.

15. Reconnect the gauge control module (tach) 36P connector.

16. Remove the fuel tank unit (see page 11-361).

17. Connect the fuel tank unit subharness 4P connector, and the fuel tank unit 4P connector.

18. Turn the ignition switch to ON (II).

19. Clear the DTC with the HDS.

20. Set the float (A) to the E position.

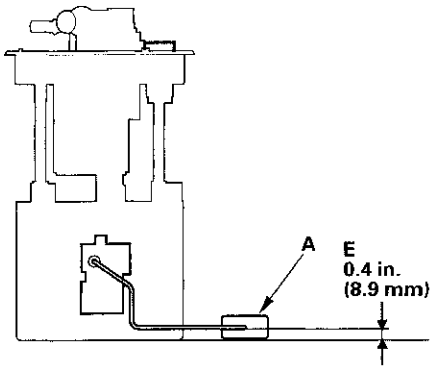

21. Check the fuel gauge.

Does the gauge move to the empty position?

YES△Go to step 29.

NO△Replace the gauge control module (tach) (see page 22-255), then go to step 22.

22. Turn the ignition switch to LOCK (0).

23. Reconnect all connectors.

24. Install the parts in the reverse order of removal.

25. Turn the ignition switch to ON (II).

26. Reset the PCM with the HDS.

27. Do the PCM idle learn procedure (see page 11-333).

28. Check for Temporary DTCs or DTCs with the HDS.

Is DTC P0462 indicated?

YES△Check for poor connections or loose terminals at the gauge control module (tach) and the fuel gauge sending unit, then go to step 1.

NO△Troubleshooting is complete. If any other Temporary DTCs or DTCs are indicated, go to the indicated DTC's troubleshooting. ■

(cont'd)

DTC Troubleshooting (cont'd)

29. Reconnect all connectors.

30. Install the parts in the reverse order of removal.

31. Update the PCM if it does not have the latest software (see page 11-236), or substitute a known-good PCM (see page 11-7).

32. Check for Temporary DTCs or DTCs with the HDS.

    Is DTC P0462 indicated?

    YES△Check for poor connections or loose terminals at the gauge control module (tach) and the fuel gauge sending unit. If the PCM was updated, substitute a known-good PCM (see page 11-7), then recheck. If the PCM was substituted, go to step 1.

    NO△If the PCM was updated, troubleshooting is complete. If the PCM was substituted, replace the original PCM (see page 11-238). If any other Temporary DTCs or DTCs are indicated, go to the indicated DTC's troubleshooting.■

DTC P0463: Fuel Level Sensor (Fuel Gauge Sending Unit) Circuit High Voltage

NOTE: Before you troubleshoot, record all freeze data and any on-board snapshot, and review the general troubleshooting information (see page 11-3).

1. Turn the ignition switch to ON (II).

2. Clear the DTC with the HDS, and wait 5 seconds.

3. Check for Temporary DTCs or DTCs with the HDS.

   Is DTC P0463 indicated?

   YES△Go to step 4.

   NO△Intermittent failure, the system is OK at this time. Check for poor connections or loose terminals at the gauge control module (tach) and the fuel gauge sending unit.■

4. Turn the ignition switch to LOCK (0).

5. Disconnect the fuel tank unit subharness 4P connector (see step 5 on page 11-365).

6. Connect floor wire harness C651 4P connector terminal No. 2 to body ground with a jumper wire.

FLOOR WIRE HARNESS C651 4P CONNECTOR

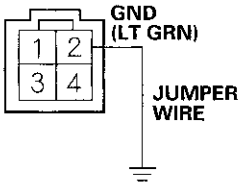

Terminal side of male terminals

7. Remove the gauge control module (tach) (see page 22-255).

8. Disconnect the gauge control module (tach) 36P connector.

9. Check for continuity between gauge control module (tach) 36P connector terminal No. 33 and body ground.

GAUGE CONTROL MODULE (TACH) 36P CONNECTOR

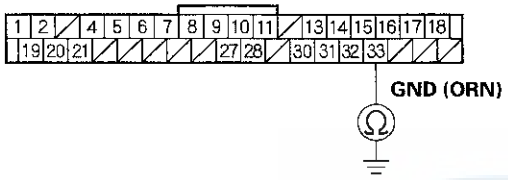

Wire side of female terminals

Is there continuity?

YES△Go to step 10.

NO△Repair open in the wire between the gauge control module (tach) (GND line) and the fuel tank unit subharness, then go to step 24.

10. Connect floor wire harness C651 4P connector terminal No. 1 to body ground with a jumper wire.

FLOOR WIRE HARNESS C651 4P CONNECTOR

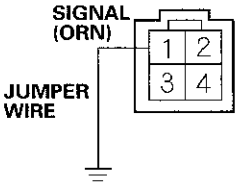

Terminal side of male terminals

11. Check for continuity between gauge control module (tach) 36P connector terminal No. 32 and body ground.

GAUGE CONTROL MODULE (TACH) 36P CONNECTOR

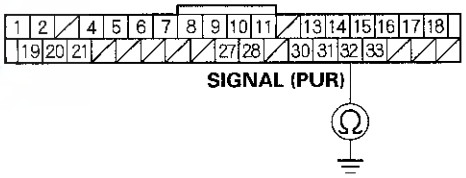

Wire side of female terminals

Is there continuity?

YES△Go to step 12.

NO△Repair open in the wire between the gauge control module (tach) (signal line) and the fuel tank unit subharness, then go to step 24.

12. Remove the fuel tank (see page 11-365).

13. Check the fuel tank unit subharness for an open or short.

Is the harness OK?

YES△Go to step 14.

NO△Repair the fuel tank unit subharness, then go to step 24.

(cont'd)

DTC Troubleshooting (cont'd)

14. Remove the jumper wire from the fuel tank unit subharness 4P connector.

15. Remove the fuel tank unit (see page 11-361).

16. Test the fuel gauge sending unit (see page 11-366).

    Is the fuel gauge sending unit OK?

    YES△Go to step 17.

    NO△Replace the fuel gauge sending unit (see page 11-364), then go to step 23.

17. Connect the fuel tank unit subharness 4P connector and, the fuel tank unit 4P connector.

18. Reconnect the gauge control module (tach) 36P connector.

19. Turn the ignition switch to ON (II).

20. Clear the DTC with the HDS.

21. Set the float (A) to the F position.

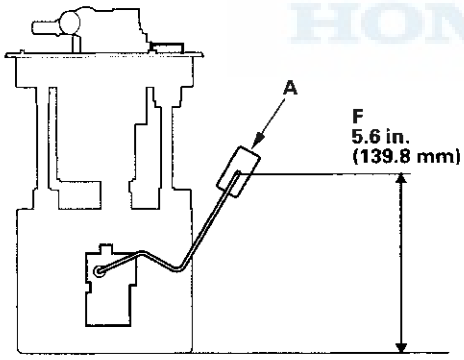

22. Check the fuel gauge.

    Does the gauge move to the full position?

    YES△Go to step 30.

    NO△Replace the gauge control module (tach) (see page 22-255), then go to step 23.

23. Turn the ignition switch to LOCK (0).

24. Reconnect all connectors.

25. Install the parts in the reverse order of removal.

26. Turn the ignition switch to ON (II).

27. Reset the PCM with the HDS.

28. Do the PCM idle learn procedure (see page 11-333).

29. Check for Temporary DTCs or DTCs with the HDS.

    Is DTC P0463 indicated?

    YES△Check for poor connections or loose terminals at the gauge control module (tach) and the fuel gauge sending unit, then go to step 1.

    NO△Troubleshooting is complete. If any other Temporary DTCs or DTCs are indicated, go to the indicated DTC's troubleshooting.■

30. Reconnect all connectors.

31. Install the parts in the reverse order of removal.

32. Update the PCM if it does not have the latest software (see page 11-236), or substitute a known-good PCM (see page 11-7).

33. Check for Temporary DTCs or DTCs with the HDS.

    Is DTC P0463 indicated?

    YES△Check for poor connections or loose terminals at the gauge control module (tach) and the fuel gauge sending unit. If the PCM was updated, substitute a known-good PCM (see page 11-7), then recheck. If the PCM was substituted, go to step 1.

    NO△If the PCM was updated, troubleshooting is complete. If the PCM was substituted, replace the original PCM (see page 11-238). If any other Temporary DTCs or DTCs are indicated, go to the indicated DTC's troubleshooting.■

Fuel Pump Circuit Troubleshooting

If you suspect a problem with the fuel pump, check that the fuel pump actually runs; when it is on, you will hear some noise if you listen to the fuel fill port with the fuel fill cap removed. The fuel pump should run for 2 seconds when the ignition switch is turned to ON (II). If the fuel pump does not make noise, check as follows:

1. Turn the ignition switch to LOCK (0).
2. Remove PGM-FI main relay 2 (A) from auxiliary under-hood fuse/relay box.

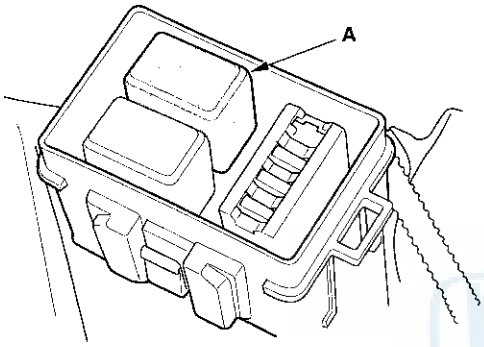

3. Turn the ignition switch to ON (II).
4. Measure the voltage between PGM-FI main relay 2 4P connector terminal No. 4 and body ground.

PGM-FI MAIN RELAY 2 4P CONNECTOR

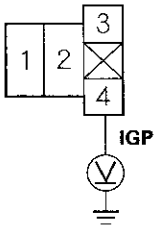

Terminal side of female terminals

Is there battery voltage?

YES△Go to step 9.

NO△Go to step 5.

5. Turn the ignition switch to LOCK (0).
6. Disconnect the under-hood fuse/relay box 8P connector.
7. Turn the ignition switch to ON (II).
8. Measure the voltage between under-hood fuse/relay box 8P connector terminal No. 6 and body ground.

UNDER-HOOD FUSE/RELAY BOX 8P CONNECTOR

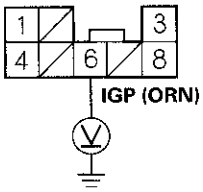

Wire side of female terminals

Is there battery voltage?

YES△Repair open in the wire between the under-hood fuse/relay box and PGM-FI main relay 2.■

NO△
- Replace PGM-FI main relay 1.■
- If needed, replace the under-hood fuse/relay box.■

(cont'd)

Fuel Pump Circuit Troubleshooting (cont'd)

9. Measure the voltage between PGM-FI main relay 2 4P connector terminal No. 2 and body ground.

PGM-FI MAIN RELAY 2 4P CONNECTOR

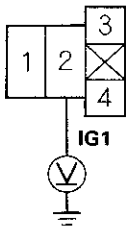

Terminal side of female terminals

Is there battery voltage?

YES△Go to step 10.

NO△
- Repair open in the wire between the under-dash fuse/relay box and PGM-FI main relay 2.■
- Check the No. 2 FUEL PUMP (15 A) fuse in the under-dash fuse/relay box.■
- If needed, replace the under-dash fuse/relay box.■

10. Turn the ignition switch to LOCK (0).

11. Jump the SCS line with the HDS.

12. Disconnect PCM connector A (44P).

13. Check for continuity between PGM-FI main relay 2 4P connector terminal No. 3 and PCM connector terminal A15.

PGM-FI MAIN RELAY 2 4P CONNECTOR

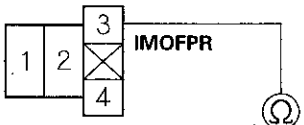

Terminal side of female terminals

PCM CONNECTOR A (44P)

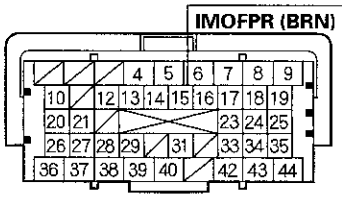

Terminal side of female terminals

Is there continuity?

YES△Go to step 14.

NO△Repair open in the wire between PGM-FI main relay 2 and the PCM (A15).■

14. Reinstall PGM-FI main relay 2.

15. Connect PCM connector terminal A6 to body ground with a jumper wire.

PCM CONNECTOR A (44P)

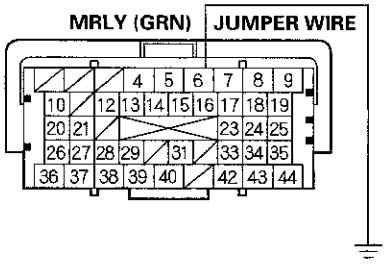

Terminal side of female terminals

16. Turn the ignition switch to ON (II).

17. Measure the voltage between PCM connector terminal A15 and body ground.

PCM CONNECTOR A (44P)

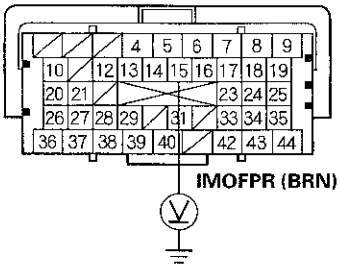

Terminal side of female terminals

Is there battery voltage?

YES△Go to step 18.

NO△Replace PGM-FI main relay 2.■

18. Turn the ignition switch to LOCK (0).

19. Reconnect PCM connector A (44P).

20. Exit the SCS mode with the HDS.

21. Turn the ignition switch to LOCK (0).

22. Turn the ignition switch to ON (II), and measure the voltage between PGM-FI main relay 2 4P connector terminal No. 3 and body ground.

PGM-FI MAIN RELAY 2 4P CONNECTOR

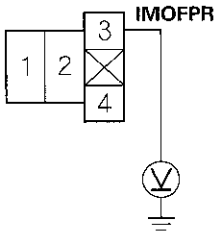

Terminal side of female terminals

Is there battery voltage?

YES△Update the PCM if it does not have the latest software (see page 11-236), or substitute a known-good PCM (see page 11-7), then recheck. If the symptom/indication goes away with a known-good PCM, replace the original PCM (see page 11-238), then go to step 23.

NO△If needed, replace the under-hood fuse/relay box, then go to step 23.

23. Turn the ignition switch to LOCK (0).

24. Disconnect the fuel tank unit subharness 4P connector (see page 11-365).

25. Turn the ignition switch to ON (II), and measure the voltage between floor wire harness C651 4P connector terminal No. 3 and body ground within 2 seconds.

FLOOR WIRE HARNESS C651 4P CONNECTOR

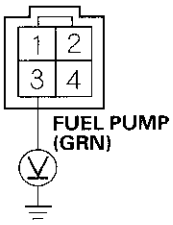

Terminal side of male terminals

Is there battery voltage?

YES△Go to step 30.

NO△Go to step 26.

26. Turn the ignition switch to LOCK (0).

27. Remove PGM-FI main relay 2.

(cont'd)

Fuel Pump Circuit Troubleshooting (cont'd)

28. Connect PGM-FI main relay 2 4P connector terminals No. 1 and No. 2 with a jumper wire.

PGM-FI MAIN RELAY 2 4P CONNECTOR

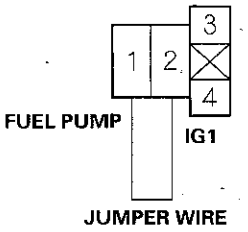

Terminal side of female terminals

29. Turn the ignition switch to ON (II), and measure the voltage between floor wire harness C651 4P connector terminal No. 3 and body ground within 2 seconds.

FLOOR WIRE HARNESS C651 4P CONNECTOR

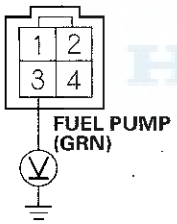

Terminal side of male terminals

Is there battery voltage?

YES△
- Repair open in the wire between the floor wire harness C651 4P connector and the fuel pump.■
- Replace PGM-FI main relay 2 (see page 11-346). ■

NO△Repair open in the wire between PGM-FI main relay 2 and the floor wire harness C651 4P connector.■

30. Turn the ignition switch to LOCK (0).

31. Check for continuity between floor wire harness C 651 4P connector terminal No. 4 and body ground.

FLOOR WIRE HARNESS C651 4P CONNECTOR

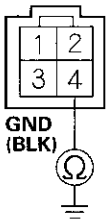

Terminal side of male terminals

Is there continuity?

YES△
- Repair open in the wire between the floor wire harness C651 4P connector and the fuel pump.■
- Replace the fuel pump (see page 11-364). ■

NO△Repair open in the wire between the floor wire harness C651 4P connector and G601.■

Fuel Pressure Relieving

Before disconnecting fuel lines or hoses, relieve pressure from the system by disabling the fuel pump and then disconnecting the fuel tube/quick connect fitting in the engine compartment.

With the HDS ('06 model)

1. Turn the ignition switch to LOCK (0).
2. Connect the HDS to the data link connector (DLC) (A) located under the driver's side of the dashboard.

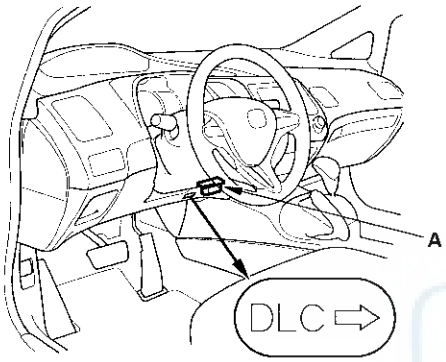

3. Turn the ignition switch to ON (II).
4. Make sure the HDS communicates with the PCM. If it doesn't, go to the DLC circuit troubleshooting (see page 11-213).
5. Turn the ignition switch to LOCK (0).
6. Remove the fuel fill cap to relieve the pressure in the fuel tank.
7. Turn the ignition switch to ON (II).
8. From the INSPECTION MENU of the HDS, select Fuel Pump OFF, then start the engine, and let it idle until it stalls.

   NOTE:
   - Do not allow the engine to idle above 1,000 rpm or the PCM will continue to operate the fuel pump.
   - A DTC or a Temporary DTC may be set during this procedure. Check for DTCs, and clear them as needed (see page 11-4).
9. Turn the ignition switch to LOCK (0).
10. Do the battery terminal reconnection procedure (see page 22-62).
11. Place a rag or shop towel over the fuel pipe (A).

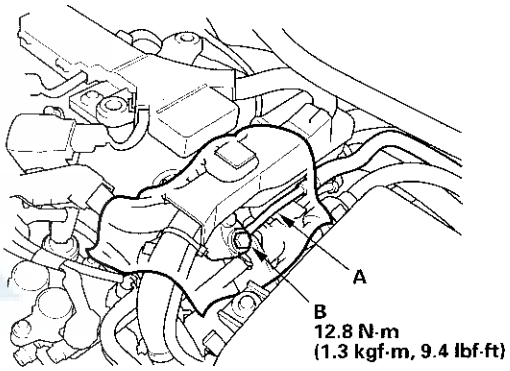

12. Loosen the bolt (B).

(cont'd)

Fuel Pressure Relieving (cont'd)

Without the HDS ('06 model)

1. Remove PGM-FI main relay 2 (A) from the auxiliary under-hood fuse/relay box.

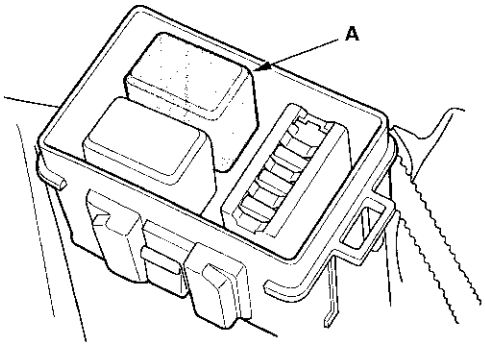

2. Start the engine, and let it idle until it stalls.

   NOTE: If any DTCs are stored, clear and ignore them.

3. Turn the ignition switch to LOCK (0).

4. Remove the fuel fill cap.

5. Do the battery terminal reconnection procedure (see page 22-62).

6. Place a rag or shop towel over the fuel pipe (A).

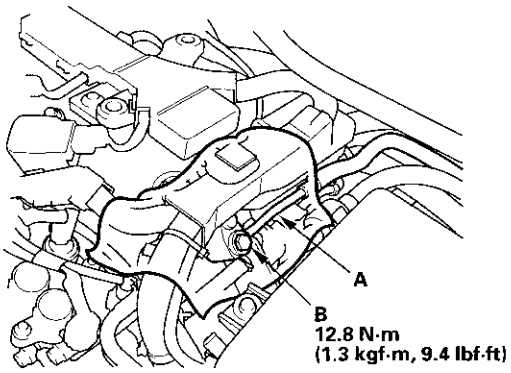

7. Loosen the bolt (B).

Before disconnecting fuel lines or hoses, relieve pressure from the system by disabling the fuel pump and then disconnecting the fuel tube/quick connect fitting in the engine compartment.

With the HDS ('07-09 models)

1. Turn the ignition switch to LOCK (0).

2. Connect the HDS to the data link connector (DLC) (A) located under the driver's side of the dashboard.

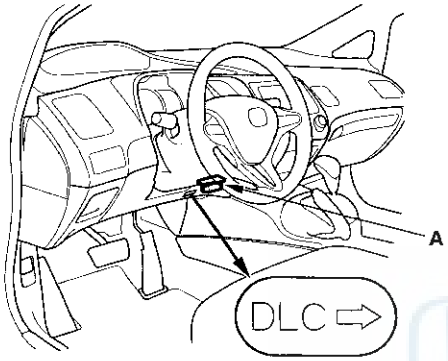

3. Turn the ignition switch to ON (II).

4. Make sure the HDS communicates with the PCM. If it doesn't, go to the DLC circuit troubleshooting (see page 11-213).

5. Turn the ignition switch to LOCK (0).

6. Remove the fuel fill cap to relieve the pressure in the fuel tank.

7. Turn the ignition switch to ON (II).

8. From the INSPECTION MENU of the HDS, select Fuel Pump OFF, then start the engine, and let it idle until it stalls.

   NOTE:
   - Do not allow the engine to idle above 1,000 rpm or the PCM will continue to operate the fuel pump.
   - A DTC or a Temporary DTC may be set during this procedure. Check for DTCs, and clear them as needed (see page 11-4).

9. Turn the ignition switch to LOCK (0).

10. Do the battery terminal reconnection procedure (see page 22-62).

11. Remove the air cleaner (see page 11-370).

12. Remove the cover (A) and the quick-connect fitting cover (B).

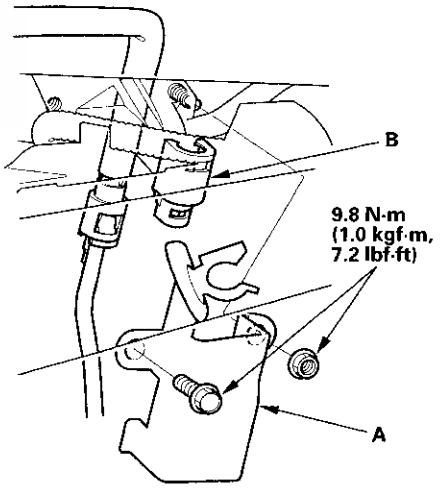

13. Check the fuel quick-connect fitting for dirt, and clean it if needed.

(cont'd)

Fuel Pressure Relieving (cont'd)

14. Place a rag or shop towel over the quick-connect fitting (A).

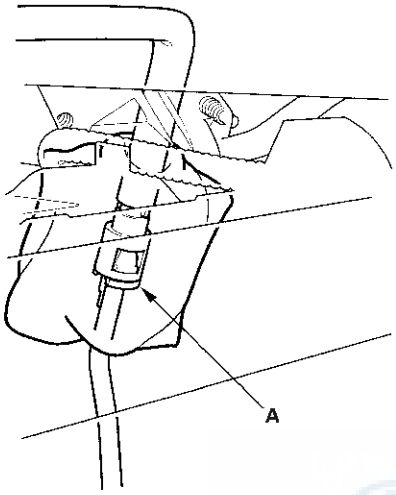

15. Disconnect the quick-connect fitting (A): Hold the connector (B) with one hand, and squeeze the retainer tabs (C) with the other hand to release them from the locking tabs (D). Pull the connector off.

    NOTE:
    - Be careful not to damage the line (E) or other parts.
    - Do not use tools.
    - If the connector does not move, keep the retainer tabs pressed down, and alternately pull and push the connector until it comes off easily.
    - Do not remove the retainer from the line; once removed, the retainer must be replaced with a new one.

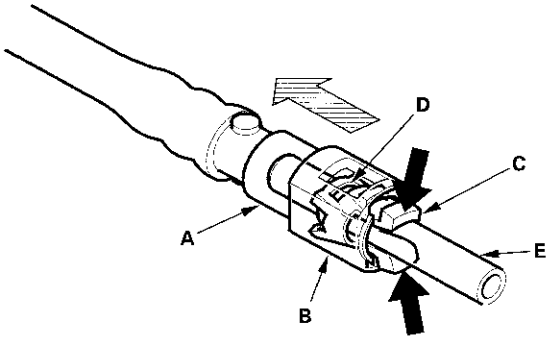

16. After disconnecting the quick-connect fitting, check it for dirt or damage (see step 4 on page 11-359).

Without the HDS ('07-09 models)

1. Remove PGM-FI main relay 2 (A) from the auxiliary under-hood fuse/relay box.

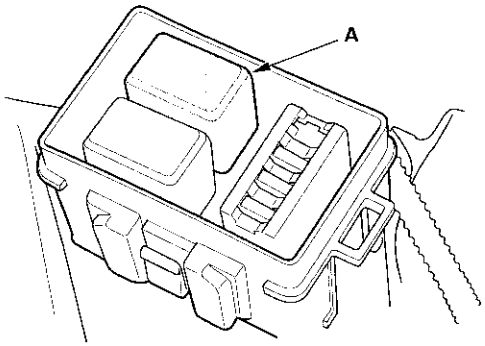

2. Start the engine, and let it idle until it stalls.

   NOTE: If any DTCs are stored, clear and ignore them.

3. Turn the ignition switch to LOCK (0).

4. Remove the fuel fill cap.

5. Do the battery terminal reconnection procedure (see page 22-62).

6. Remove the air cleaner (see page 11-370).

7. Remove the cover (A) and quick-connect fitting cover (B).

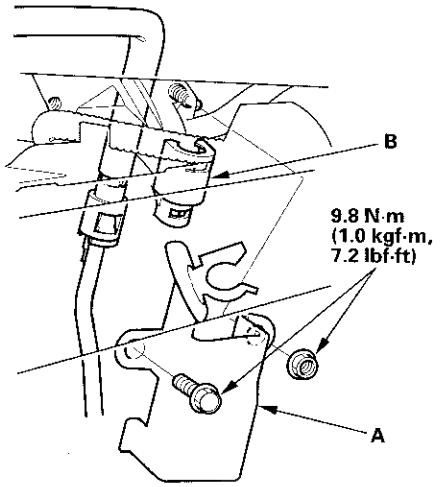

8. Check the fuel quick-connect fitting for dirt, and clean it if needed.

9. Place a rag or shop towel over the quick-connect fitting (A).

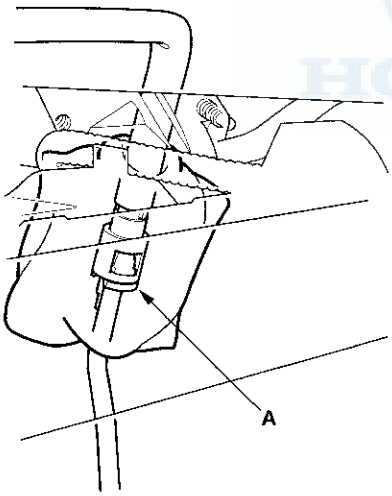

10. Disconnect the quick-connect fitting (A): Hold the connector (B) with one hand, and squeeze the retainer tabs (C) with the other hand to release them from the locking tabs (D). Pull the connector off.

NOTE:
- Be careful not to damage the line (E) or other parts.
- Do not use tools.
- If the connector does not move, keep the retainer tabs pressed down, and alternately pull and push the connector until it comes off easily.
- Do not remove the retainer from the line; once removed, the retainer must be replaced with a new one.

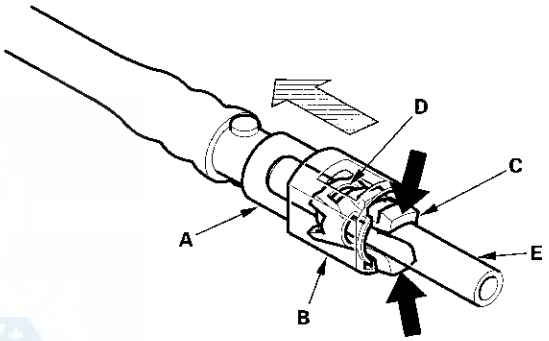

11. After disconnecting the quick-connect fitting, check it for dirt or damage (see step 4 on page 11-359).

Fuel Pressure Test

Special Tools Required
Fuel pressure gauge 07406-004000B

'06 model

1. Relieve the fuel pressure (see page 11-345).

2. Remove the bolt (A). Attach the fuel pressure gauge with a new O-ring.

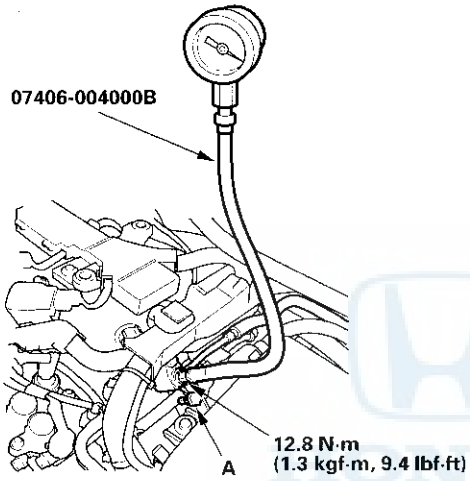

3. Start the engine, and let it idle.

   - If the engine starts, go to step 5.
   - If the engine does not start, go to step 4.

4. Check to see if the fuel pump is running; listen to the fuel filler port with the fuel fill cap removed. The fuel pump should run for 2 seconds when the ignition switch is first turned on.

   - If the pump runs, go to step 5.
   - If the pump does not run, do the fuel pump circuit troubleshooting (see page 11-341).

5. Read the fuel pressure gauge. The pressure should be 260—310 kPa (2.7—3.2 kgf/cm^2, 38—46 psi).

   - If the pressure is OK, the test is complete.
   - If the pressure is out of specification, replace the fuel pressure regulator (see page 11-363) and the fuel filter (see page 11-363), then recheck the fuel pressure.

Special Tools Required
- Fuel pressure gauge 07406-004000B
- Fuel pressure gauge attachment set 07AAJ-S6MA150

'07-09 models

1. Relieve the fuel pressure (see page 11-347).

2. Disconnect the quick-connect fitting (A). Attach the fuel pressure gauge set and the fuel pressure gauge.

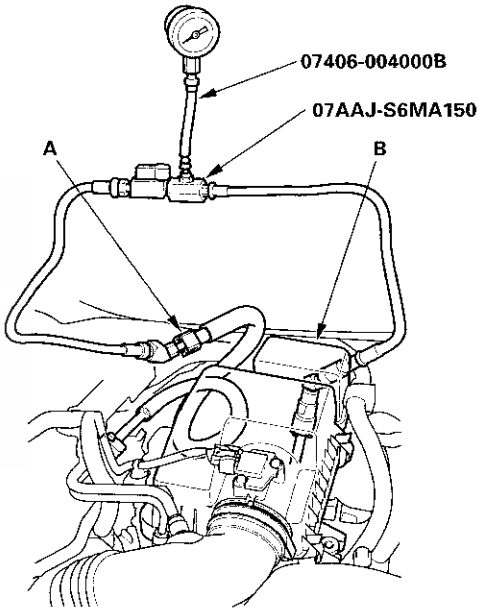

3. Reinstall the air cleaner (B) (see page 11-370).

4. Start the engine, and let it idle.

   - If the engine starts, go to step 6.
   - If the engine does not start, go to step 5.

5. Check to see if the fuel pump is running; listen to the fuel filler port with the fuel fill cap removed. The fuel pump should run for 2 seconds when the ignition switch is first turned on.

   - If the pump runs, go to step 6.
   - If the pump does not run, do the fuel pump circuit troubleshooting (see page 11-341).

6. Read the fuel pressure gauge. The pressure should be 260—310 kPa (2.7—3.2 kgf/cm^2, 38—46 psi).

   - If the pressure is OK, the test is complete.
   - If the pressure is out of specification, replace the fuel pressure regulator (see page 11-363) and the fuel filter (see page 11-363), then recheck the fuel pressure.

Fuel Line Inspection

Check the fuel system lines and hoses for damage, leaks, and deterioration. Replace any damaged parts.

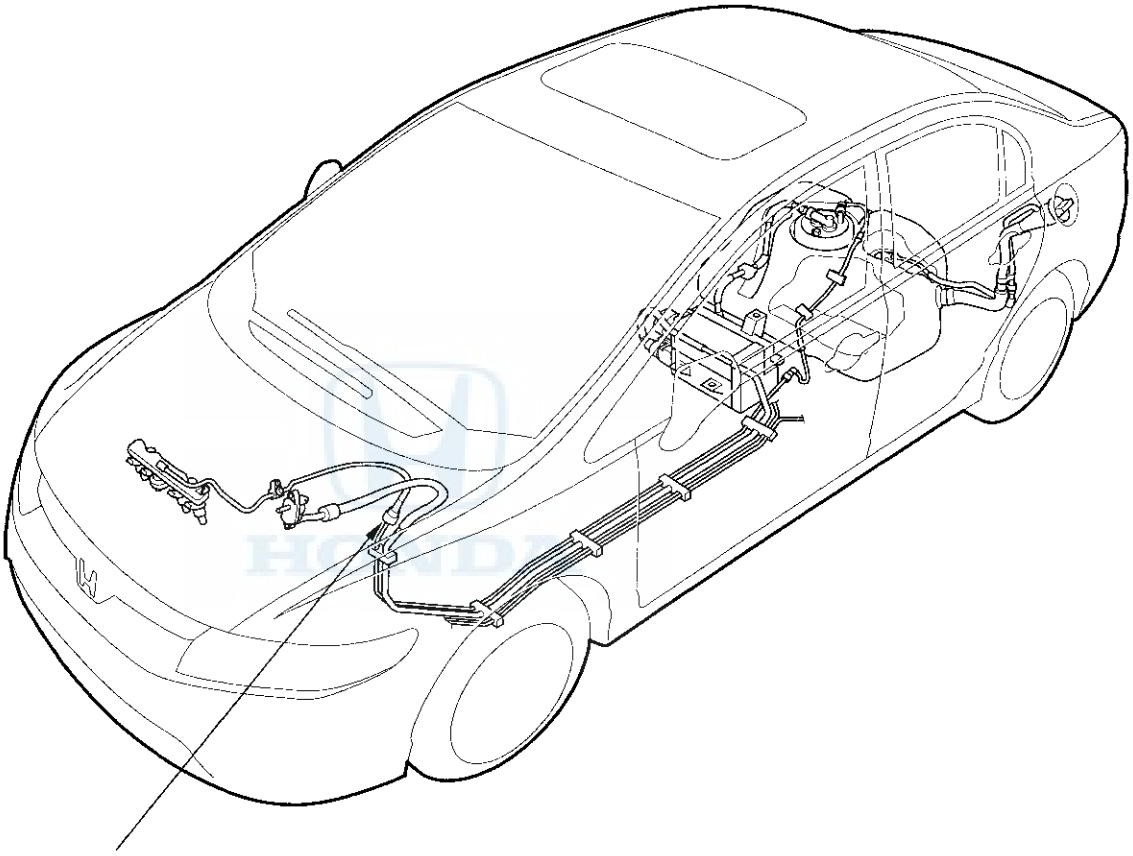

Make sure the connections are secure and the quick-connect fitting covers are firmly locked in place.

Check all quick-connect fittings, and make sure they are properly positioned and tightened.

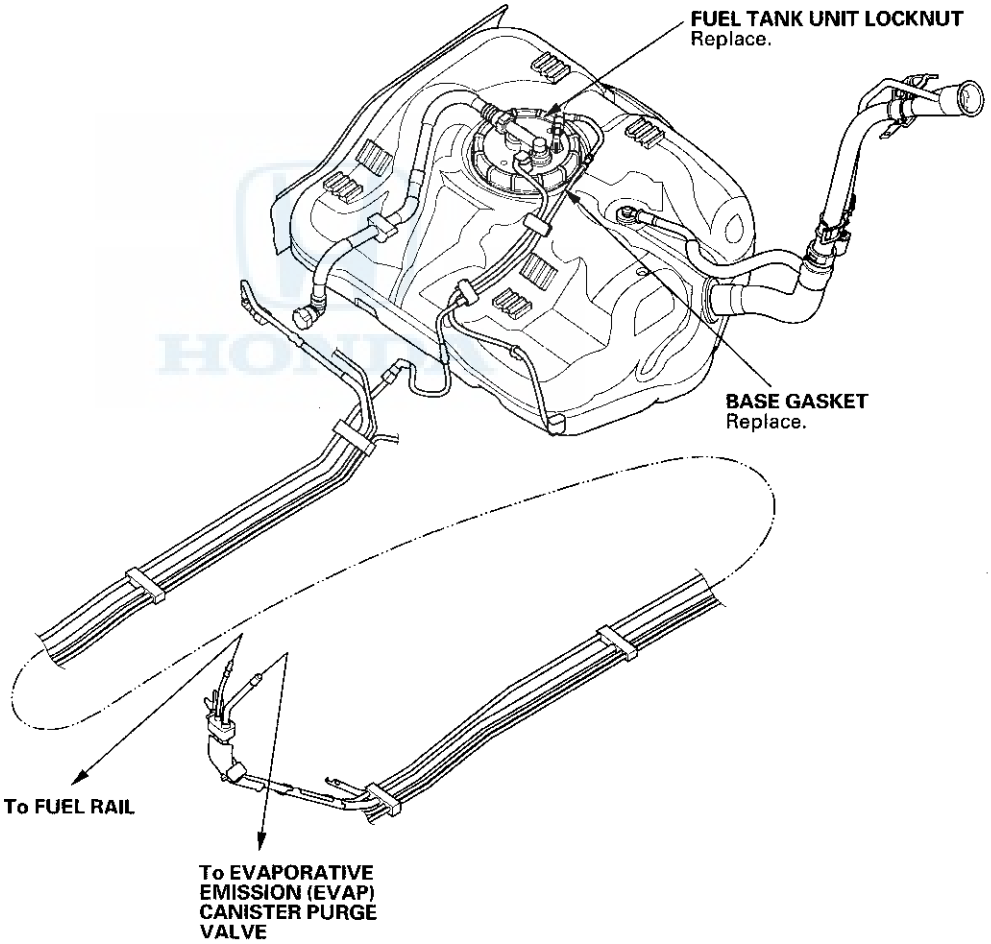

Fuel Line/Quick-Connect Fitting Precautions

The fuel line/quick-connect fittings (A), (B), (C), (D), (E), (F), (G) connect the fuel feed hose (H) to the fuel feed pipe (I), the fuel feed hose (J) to the fuel feed pipe (K), the fuel feed hose to the fuel tank unit (L), the fuel tank unit to the EVAP canister (M), the EVAP canister to the fuel vapor line (N), fuel tank vapor recirculation tube (O) to the fuel fill pipe (P), and the fuel fill neck tube (Q) to the fuel fill pipe. When removing or installing the fuel feed hose, the fuel tank unit, or the fuel tank, it is necessary to disconnect or connect the quick-connect fittings.
Pay attention to the following:

- The fuel feed hoses, the fuel line, and the quick-connect fittings are not heat-resistant; be careful not to damage them during welding or other heat-generating procedures.
- The fuel feed hoses, the fuel line, and the quick-connect fittings are not acid-proof; do not touch them with a shop towel that was used for wiping battery electrolyte. Replace them if they come in contact with electrolyte or something similar.
- When connecting or disconnecting the fuel feed hoses, the fuel line, and the quick-connect fittings, be careful not to bend or twist them excessively. Replace them if they are damaged.

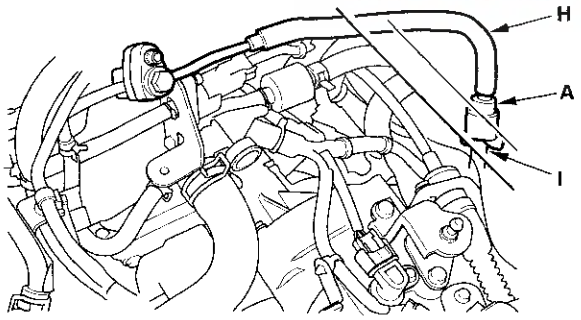

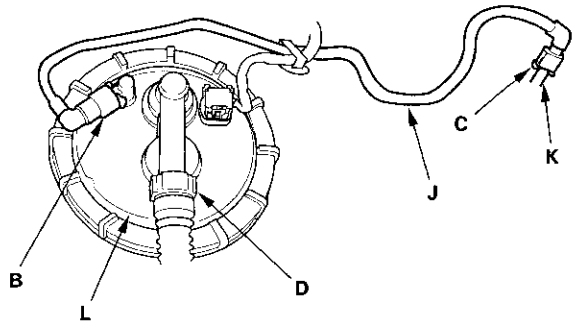

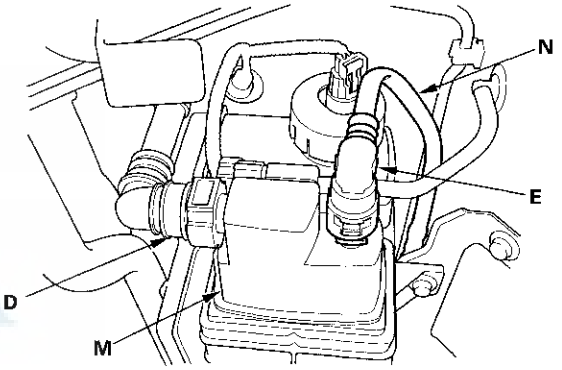

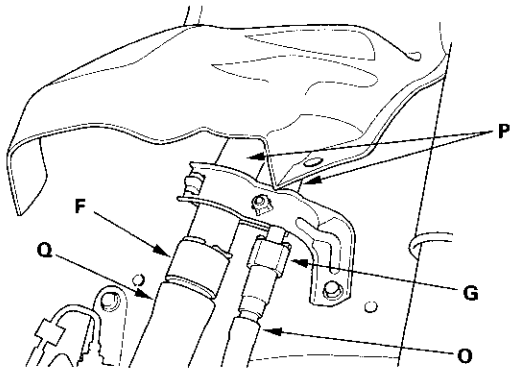

A disconnected quick-connect fitting can be reconnected, but the retainer on the mating line cannot be reused once it has been removed from the line. Replace the retainer when:

- replacing the fuel feed hose.
- replacing the fuel line.
- replacing the fuel pump.
- replacing the fuel filter.
- replacing the fuel gauge sending unit.
- replacing the fuel tank.
- it has been removed from the line.
- it is damaged.

NOTE: The fuel line/quick-connect fittings retainer (D), (E), (F), and (G) can be reused once.
If the fuel line/quick-connect fittings retainer (F) is damaged, replace the fuel tank (see page 11-365).

Location	Manufacturer	Retainer color	Line diameter
A	Sanoh	White	0.3 in. (6.4 mm)
B	Sanoh	White	0.4 in. (9.5 mm)
C	Sanoh	White	0.3 in. (6.4 mm)
E	Sanoh	White	0.5 in. (12 mm)
G	Tokai	Natural	0.5 in. (12 mm)

Fuel Line/Quick-Connect Fitting Removal

NOTE: Before you work on the fuel lines and fittings, read the Fuel Line/Quick-Connect Fitting Precautions (see page 11-354).

1. Relieve the fuel pressure; '06 model (see page 11-345), '07-09 models (see page 11-347).

2. Check the fuel quick-connect fittings (A) for dirt, and clean them if needed.

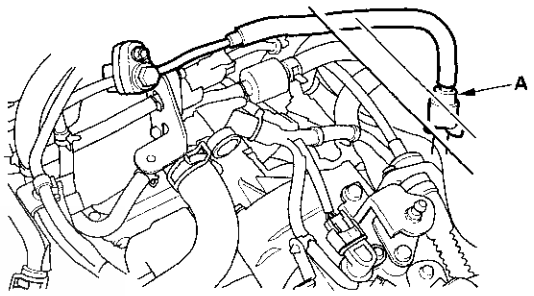

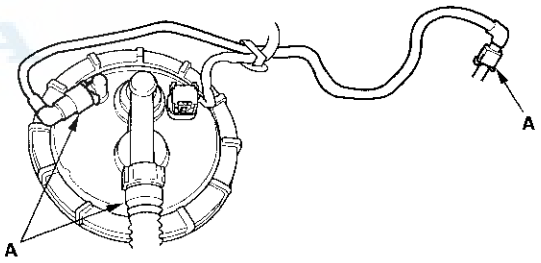

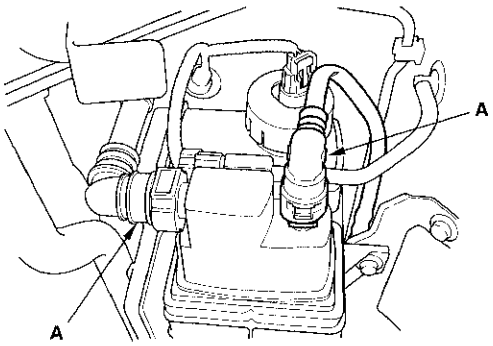

(cont'd)

Fuel Line/Quick-Connect Fitting Removal (cont'd)

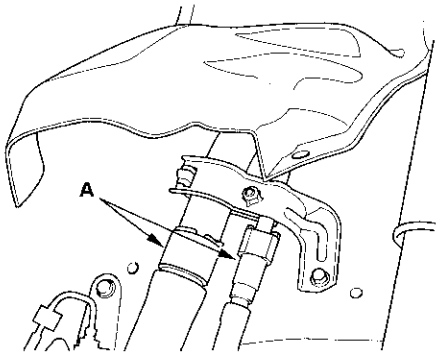

3. Place a rag or shop towel over the quick-connect fitting. Hold the connector (A) with one hand, and squeeze the retainer tabs (B) with the other hand to release them from the locking tabs (C). Pull the connector off.

   Fuel tank vapor control tube: Place a rag or shop towel over the quick-connect fitting. Pull locking tab (D). Pull the connector off.

   NOTE:
   - Be careful not to damage the line (E) or other parts.
   - Do not use tools.
   - If the connector does not move, keep the retainer tabs pressed down, and alternately pull and push the connector until it comes off easily.
   - Do not remove the retainer from the line; once removed, the retainer must be replaced with a new one.

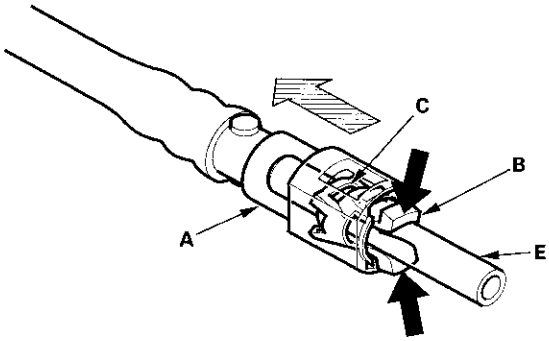

Fuel fill neck tube

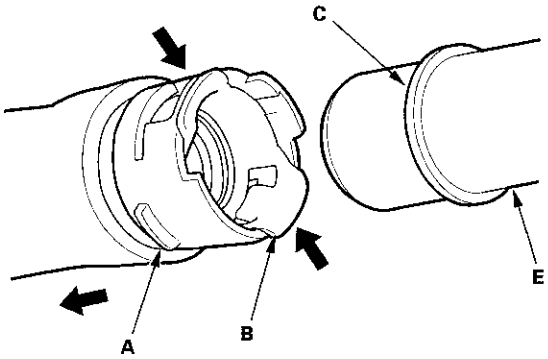

Fuel tank vapor control tube

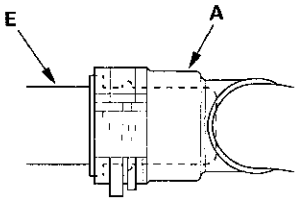

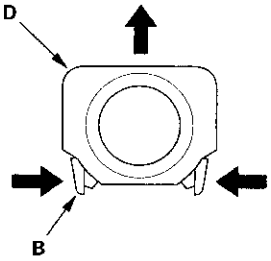

4. Check the contact area (A) of the line (B) for dirt or damage.

   - If it is dirty, clean it.
   - If it is rusty or damaged, replace the fuel filter or the fuel feed line.

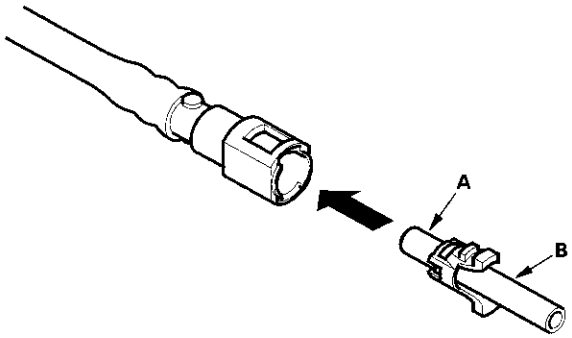

5. To prevent damage and keep foreign matter out, cover the disconnected connector and line ends with plastic bags (A).

   NOTE: The retainer cannot be reused once it has been removed from the line.
   Replace the retainer when:
   - replacing the fuel rail.
   - replacing the fuel feed line.
   - replacing the fuel pump.
   - replacing the fuel filter.
   - replacing the fuel gauge sending unit.
   - replacing the fuel tank.
   - it has been removed from the line.
   - it is damaged.

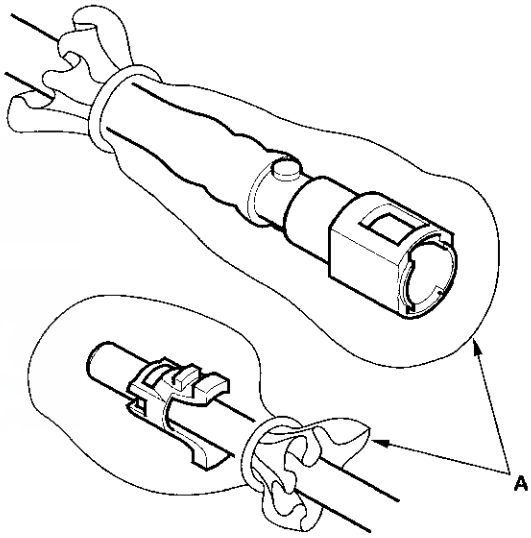

Fuel Line/Quick-Connect Fitting Installation

NOTE: Before you work on the fuel lines and fittings, read the Fuel Line/Quick-Connect Fitting Precautions (see page 11-354).

1. Check the contact area (A) of the line (B) for dirt or damage, and clean it if needed.

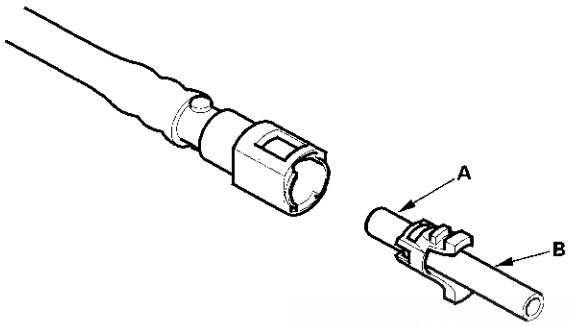

2. Insert a new retainer (A) into the connector (B) if the retainer is damaged, or after:

   - replacing the fuel rail.
   - replacing the fuel feed line.
   - replacing the fuel pump.
   - replacing the fuel filter.
   - replacing the fuel gauge sending unit.
   - replacing the fuel tank.
   - removing the retainer from the line.
   - Use the same manufacturer's retainer and the same size retainer when the replacing the retainer (see page 11-354).

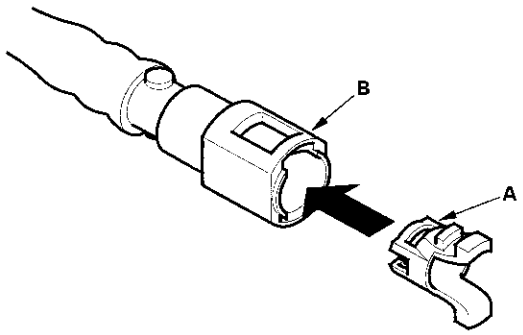

3. Before connecting a new fuel tube/quick-connect fitting assembly (A), remove the old retainer from the mating line.

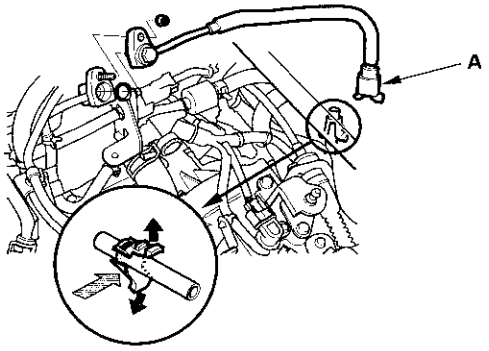

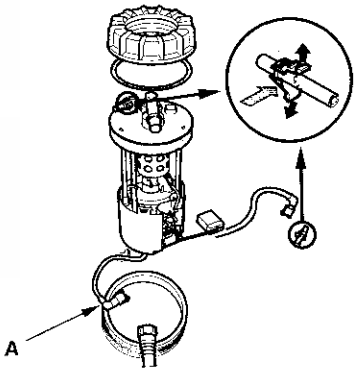

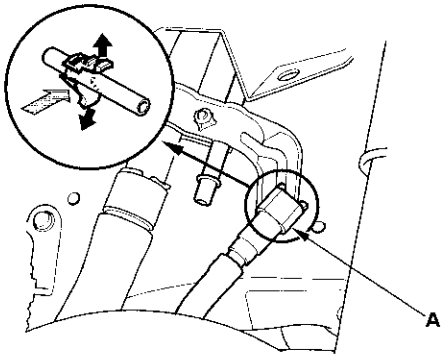

4. Align the quick-connect fittings with the line (A), and align the retainer locking tabs (B) with the connector grooves (C). Then press the quick-connect fittings onto the line until both retainer tabs lock with a clicking sound.

   NOTE: If it is hard to connect, put a small amount of new engine oil on the line end.

   Connection to new retainer

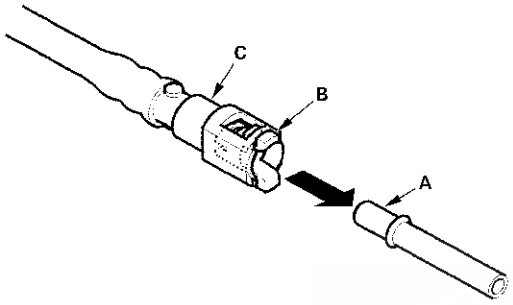

   Reconnection to existing retainer

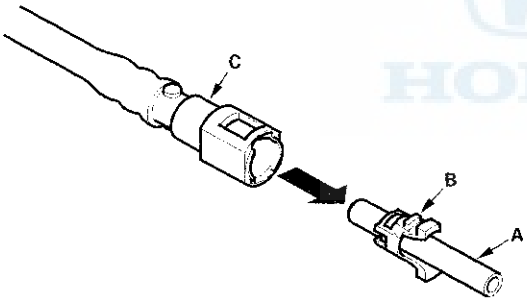

   Connection to new fuel line

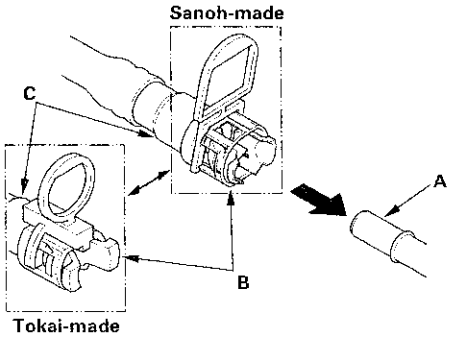

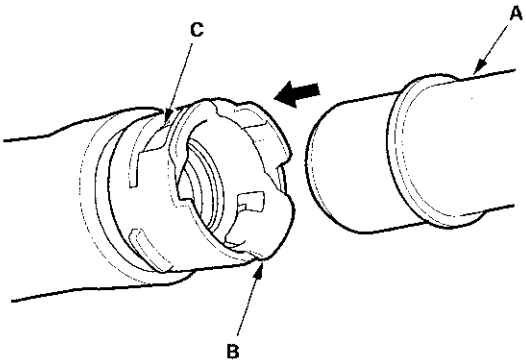

5. Fuel tank vapor control tube: Insert the line end (A) into the connector end, then press the locking tab (B).

   NOTE: If it is hard to connect, put a small amount of new engine oil on the line end.

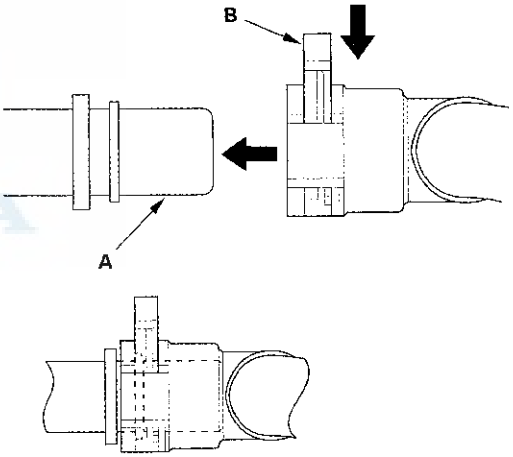

(cont'd)

Fuel Line/Quick-Connect Fitting Installation (cont'd)

6. When you are reconnecting the connector with the old retainer, make sure the connection is secure and the tabs (A) are firmly locked into place; check visually and also by pulling the connector (B). When you are replacing the fuel line with a new one, make sure you remove the ring pull (C) upwards after you confirm the connection is secure.

   NOTE: Before you remove the ring pull, make sure the fuel line connection is secure. If the connection is not secure, the ring pull could break when you try to remove it.

   Reconnection to existing retainer

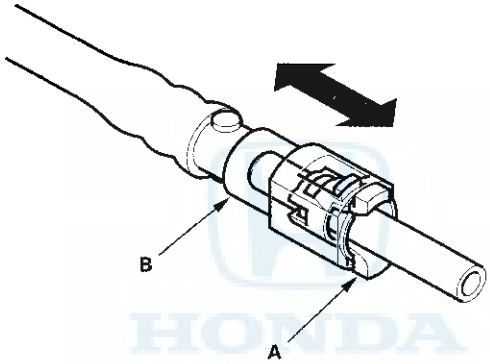

   Connection to new fuel line

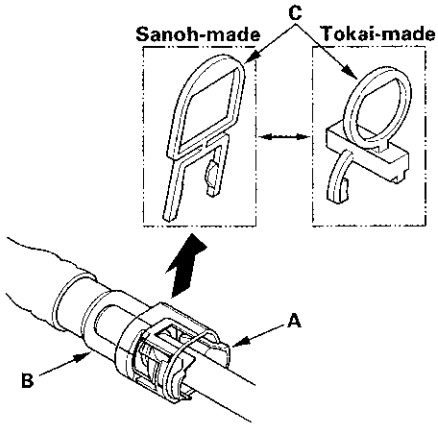

7. Turn the ignition switch to ON (II). The fuel pump will run for about 2 seconds, and fuel pressure will rise. Repeat two or three times, and check that there is no leakage in the fuel supply system.

Fuel Tank Unit Removal and Installation

Special Tools Required
Fuel pump module locknut wrench 07AAA-SNAA100

Removal

1. Remove the fuel tank (see page 11-365).
2. Disconnect the fuel tank unit 4P connector.
3. Using the special tool, loosen the locknut (A).

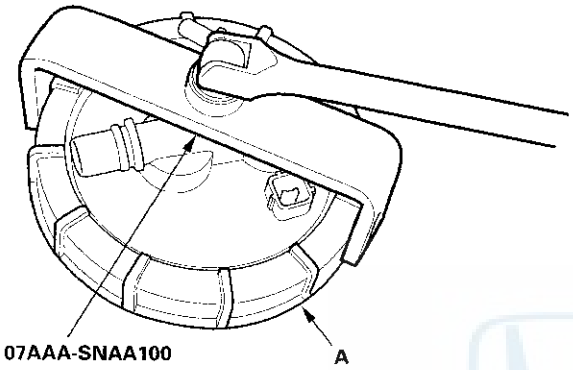

4. Remove the locknut (A) and the fuel tank unit (B).

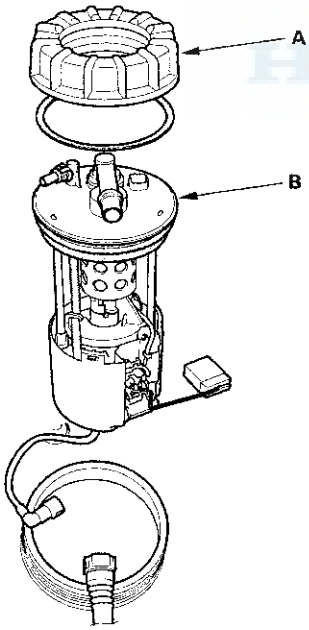

Installation

1. Temporarily attach a new base gasket (A) to the fuel tank unit (B), then insert the fuel tank unit partially into the fuel tank.

   NOTE:
   - Be careful not to damage the new base gasket.
   - Be careful not to bend the fuel gauge sending unit.
   - Do not coat the base gasket with oil.

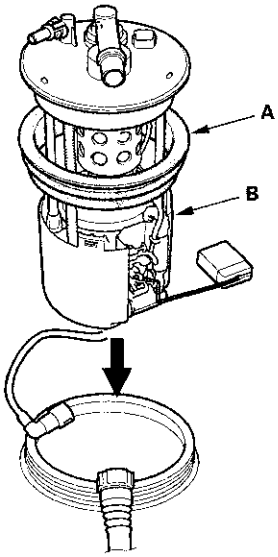

(cont'd)

Fuel Tank Unit Removal and Installation (cont'd)

2. Transfer the base gasket (A) from the fuel tank unit onto the fuel tank.

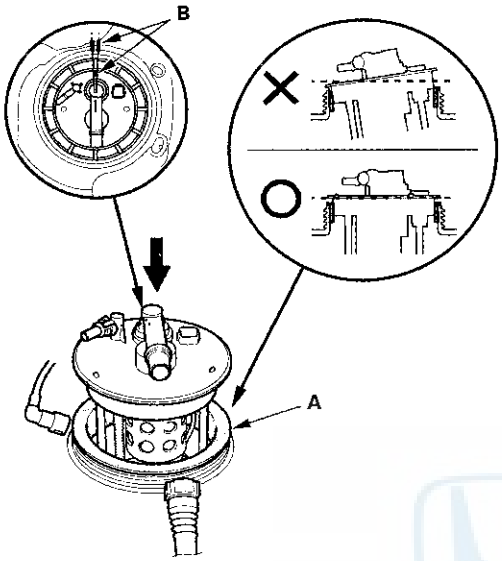

3. Align the marks (B) on the fuel tank and the fuel tank unit, then insert the fuel tank unit into the fuel tank until it sits on the base gasket.

   NOTE: To prevent a fuel leak, check the base gasket, visually or by hand, to make sure it is not pinched.

4. Install the new locknut plate (A) and new locknut (B).

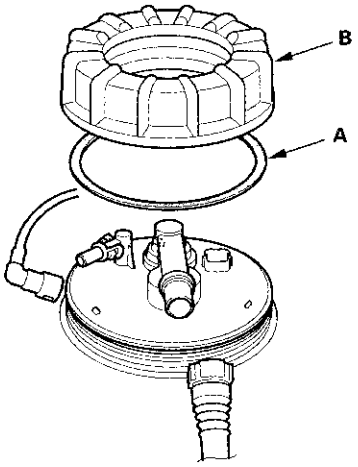

5. Using the special tool, tighten a locknut (A) to the specified torque.

   NOTE:
   - After tightening, make sure the marks are still aligned.
   - After installation, check the base gasket, visually or by hand, to make sure it is not pinched.

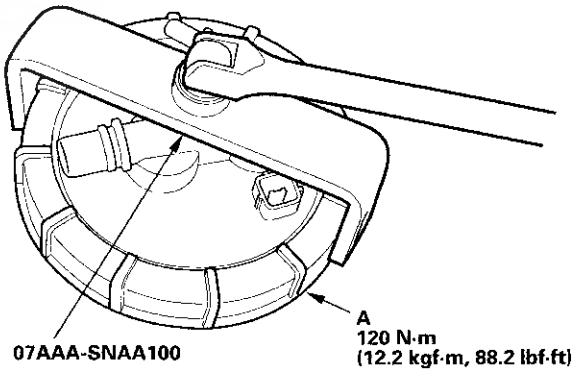

6. Connect the fuel tank unit 4P connector.

7. Install the fuel tank (see page 11-365).

Fuel Pressure Regulator Replacement

1. Remove the fuel tank unit (see page 11-361).

2. Remove the bracket (A).

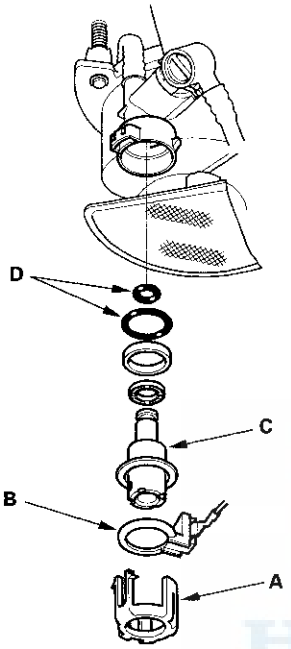

3. Remove the ground ring (B).

4. Remove the fuel pressure regulator (C).

5. Install the parts in the reverse order of removal with new O-rings (D) and a new bracket (A). When installing the fuel tank unit, align the marks on the unit and the fuel tank (see page 11-361).

   NOTE: Coat the O-rings with clean engine oil; do not use any other oil.
   Do not pinch the O-rings during installation.

Fuel Filter Replacement

The fuel filter should be replaced whenever the fuel pressure drops below the specified value; '06 model (see page 11-350), '07-09 models (see page 11-350). after making sure that the fuel pump and the fuel pressure regulator are OK.

1. Remove the fuel tank unit (see page 11-361).

2. Remove the fuel filter set (A).

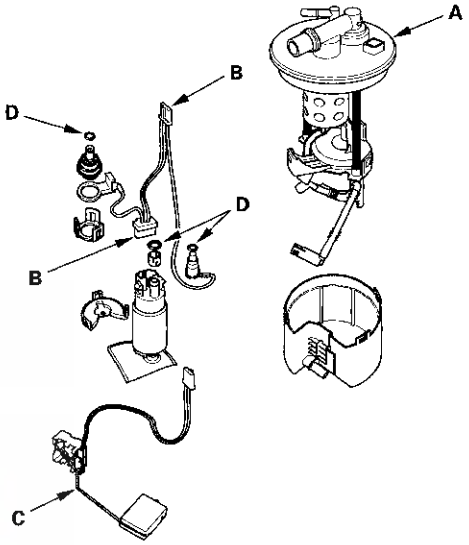

3. Check these items before installing the fuel tank unit:

   - When connecting the wire harness, make sure the connection is secure and the connectors (B) are firmly locked into place.
   - When installing the fuel gauge sending unit (C), make sure the connection is secure and the connector is firmly locked into place. Be careful not to bend or twist it excessively.

4. Install the parts in the reverse order of removal with new O-rings (D). When installing the fuel tank unit, align the marks on the unit and the fuel tank (see page 11-361).

   NOTE: Coat the O-rings with clean engine oil; do not use any other oil.

Fuel Pump/Fuel Gauge Sending Unit Replacement

1. Remove the fuel tank unit (see page 11-361).

2. Remove the fuel level sensor (fuel gauge sending unit) (A) from the fuel tank unit (B).

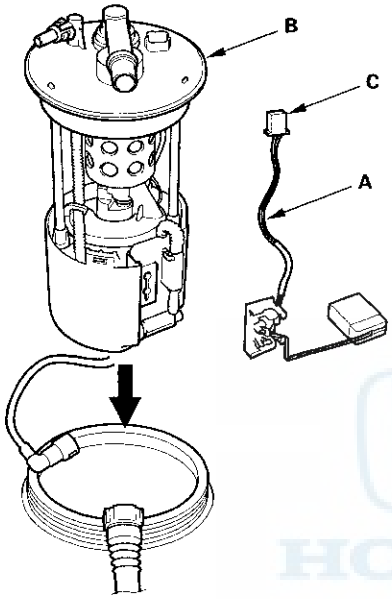

3. Check these items before installing the fuel tank unit:

   - When connecting the wire harness, make sure the connection is secure and the connectors (C) are firmly locked into place.
   - When installing the fuel gauge sending unit, make sure the connection is secure. Be careful not to bend or twist it excessively.

4. Install the parts in the reverse order of removal. When installing the fuel tank unit, align the marks on the unit and the fuel tank (see page 11-361).

Fuel Pulsation Damper Replacement

1. Relieve the fuel pressure; '06 model (see page 11-345), '07-09 models (see page 11-347).

2. Remove the engine cover.

3. Remove the fuel rail mounting nuts from the fuel rail.

4. Disconnect the fuel injector connectors.

5. Remove the fuel rail.

6. Place a wrench (A) on the fuel rail (B).

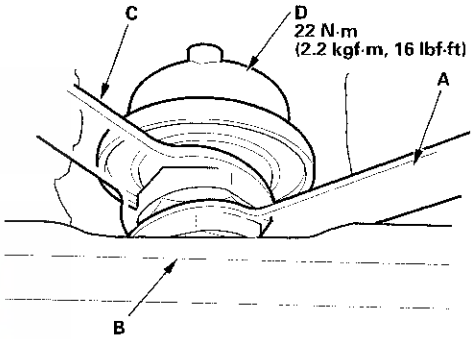

7. Place a wrench (C) on the fuel pulsation damper (D).

8. Remove the pulsation damper.

9. Install the parts in the reverse order of removal with the new washers.

   NOTE:
   - Replace all washers whenever the fuel pulsation damper is loosened or removed.
   - If the drain hole (A) of the fuel pulsation damper cover does not face bottom, reinstall it as shown.

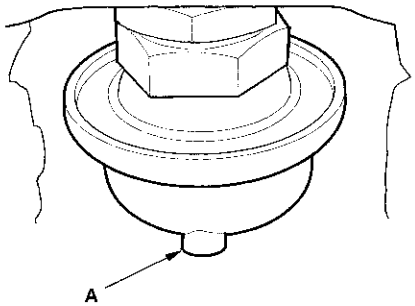

Fuel Tank Replacement

1. Relieve the fuel pressure; '06 model (see page 11-345), '07-09 models (see page 11-347).
2. Remove the fuel fill cap.
3. Raise the vehicle on a lift.
4. Remove the cover (A), and the EVAP canister guard pipe (B).

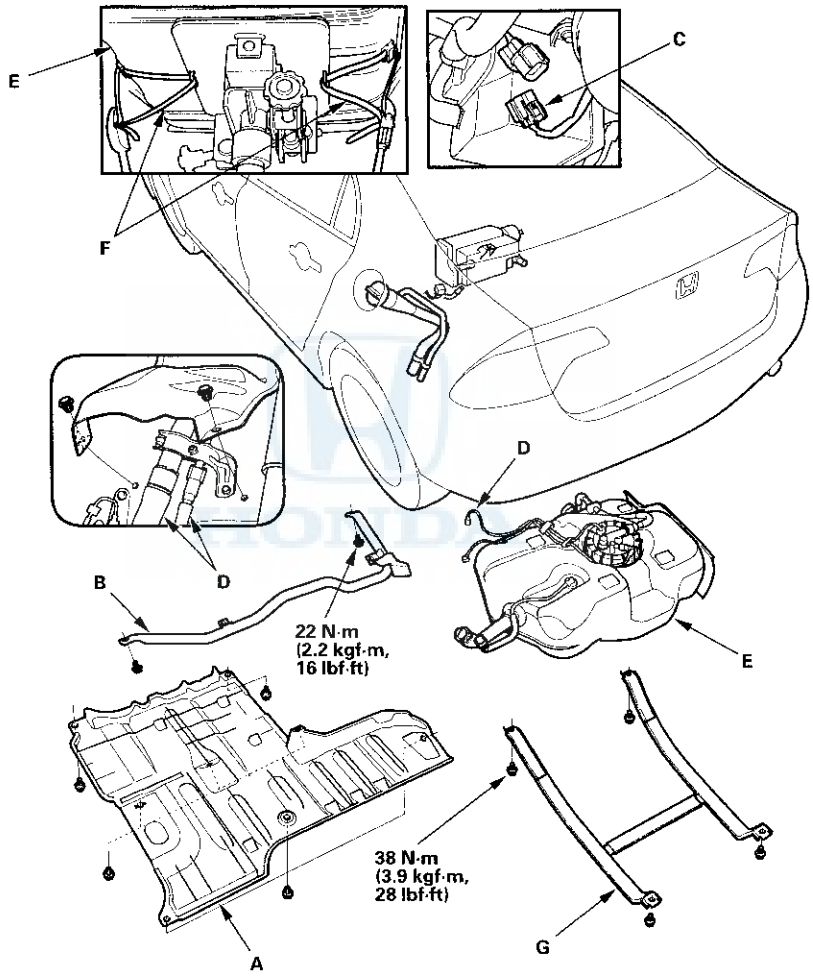

5. Disconnect the fuel tank unit subharness 4P connector (C).
6. Disconnect the quick-connect fittings (D).
7. Place a jack or other support under the tank (E), and secure the tank to the jack with a winch strap (F).
8. Remove the strap bolts and the straps (G).
9. Remove the fuel tank.
10. Install the parts in the reverse order of removal.

Fuel Gauge Sending Unit Test

NOTE: For the fuel gauge system circuit diagram, refer to the Gauges Circuit Diagram (see page 22-226).

1. Check the No. 10 METER (7.5 A) fuse in the under-dash fuse/relay box before testing.

2. Check for body electrical system DTCs.

   - If no problem is found, go to step 3.
   - If DTC B1175 or B1176 is indicated, go to the indicated DTC's troubleshooting.

3. Disconnect the fuel tank unit subharness 4P connector.

4. Measure the voltage between floor wire harness C 651 4P connector terminals No. 1 and No. 2 with the ignition switch ON (II). There should be battery voltage.

   - If the voltage is OK, check for short or open in the fuel subharness, then go to step 5.
   - If the voltage is not as specified, check for:
     – a short in the ORN wire to ground.
     – an open in the ORN or LT GRN wire.

FLOOR WIRE HARNESS C651 4P CONNECTOR

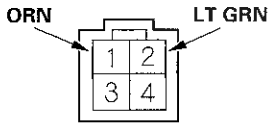

Terminal side of male terminals

5. Turn the ignition switch to LOCK (0).

6. Remove the fuel tank unit from the fuel tank (see page 11-361).

7. Measure the resistance between fuel tank unit 4P connector terminals No. 1 and No. 3 with the float at E (EMPTY), LOW (LOW FUEL INDICATOR), 1/2 (HALF FULL), and F (FULL) positions.
   If you do not get the following readings, replace the fuel gauge sending unit (see page 11-364).

Float Position	F 5.6 in. (139.8 mm)	1/2 2.9 in. (72.1 mm)	LOW 0.8 in. (19.5 mm)	E 0.4 in. (8.9 mm)
Resistance (Ω)	19 to 21	205.8 to 215.8	537.5 to 707	772 to 788

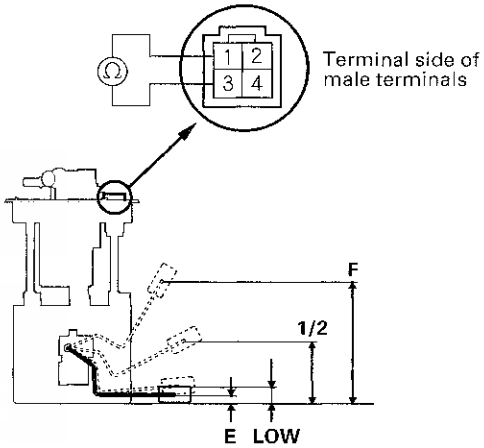

8. Reconnect the fuel tank unit subharness 4P connector.

9. Remove the No. 23 BACK UP (10 A) fuse from the under-hood fuse/relay box for at least 10 seconds, then reinstall it.

10. Turn the ignition switch to ON (II).

11. Check that the pointer of the fuel gauge indicates F with the float at F.

    - If the pointer of the fuel gauge does not indicate F replace the gauge assembly.
    - If the gauge is OK, the test is complete.

    NOTE:
    - The pointer of the fuel gauge returns to the bottom of the gauge dial when the ignition switch is LOCK (0), regardless of the fuel level.
    - Remove the No. 23 BACK UP (10 A) fuse from the under-hood fuse/relay box for at least 10 seconds after completing troubleshooting, otherwise it may take up to 20 minutes for the fuel gauge to indicate the correct fuel level.

Low Fuel Indicator Test

1. Do the gauge self-diagnostic test (see page 22-223).

    - If the low fuel indicator flashes, go to step 2.
    - If the low fuel indicator does not flash, replace the gauge control module (tach) (see page 22-255).

2. Check for body electrical system DTCs.

    - If any DTCs are indicated, do the indicated DTC's troubleshooting.
    - If no DTCs are indicated, go to step 3.

3. Do the fuel gauge sending unit test (see page 11-366).

Component Location Index

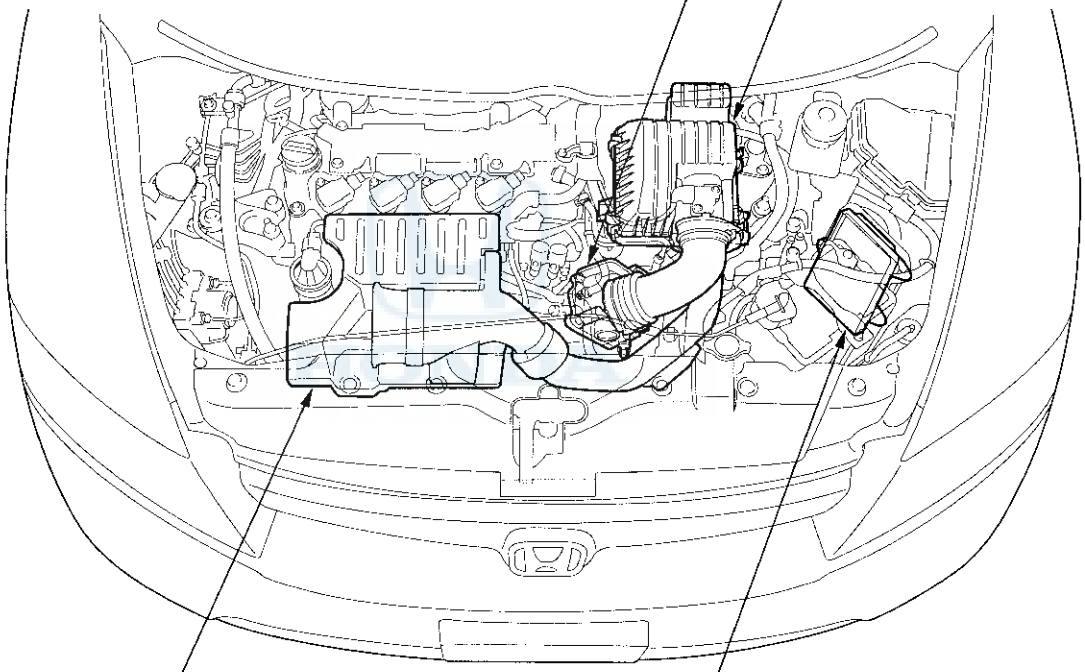

Throttle Body Test

Carbon Accumulation Check

NOTE: If the malfunction indicator lamp (MIL) has been reported on, check for diagnostic trouble code (DTCs).

1. Connect the HDS to the data link connector (DLC) (A) located under the driver's side of the dashboard.

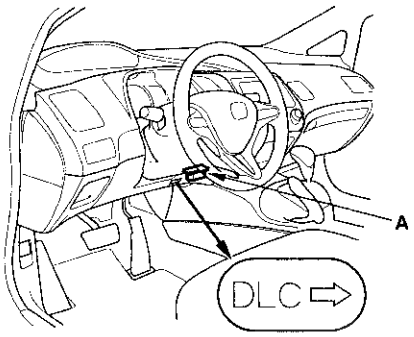

2. Turn the ignition switch to ON (II).
3. Make sure the HDS communicates with the PCM. If it doesn't, go to the DLC circuit troubleshooting (see page 11-213).
4. Start the engine. Hold the engine speed at 3,000 rpm without load (in P or N) until the radiator fan comes on, then let it idle.
5. Check the REL TP SENSOR in the DATA LIST with the HDS. The reading should be below 3 deg. If it is not, clean the throttle body (see page 11-370).

Throttle Position Learning Check

NOTE: If the malfunction indicator lamp (MIL) has been reported on, check for diagnostic trouble code (DTCs).

1. Connect the HDS to the data link connector (DLC) (A) located under the driver's side of the dashboard.

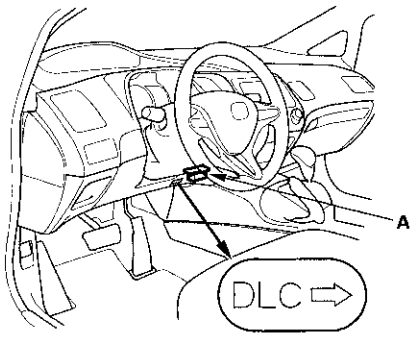

2. Turn the ignition switch to ON (II).
3. Make sure the HDS communicates with the PCM. If it doesn't, go to the DLC circuit troubleshooting (see page 11-213).
4. Select the INSPECTION MENU with the HDS.
5. Do the TP POSITION CHECK in the ETCS TEST. If needed, clean the throttle body (see page 11-370).

Throttle Body Cleaning

⚠CAUTION

Do not insert your fingers into the installed throttle body when you turn the ignition switch to ON (II) or while the ignition switch is ON (II). If you do, you will seriously injure your fingers if the throttle valve is activated.

1. Check for damage to the air cleaner element. If the air cleaner element is damaged, replace it (see page 11-371).
2. Remove the throttle body (see page 11-372).
3. Clean off the carbon from the throttle valve and inside the throttle body with a paper towel soaked in throttle plate cleaner.

   NOTE:
   - Remove the throttle body to clean it.
   - Be careful not to pinch your fingers.
   - To avoid removing the molybdenum coating, do not clean the bearing area of the throttle shaft (A).
   - Do not spray throttle plate cleaner directly on the throttle body.
   - Use Honda genuine throttle plate cleaner.

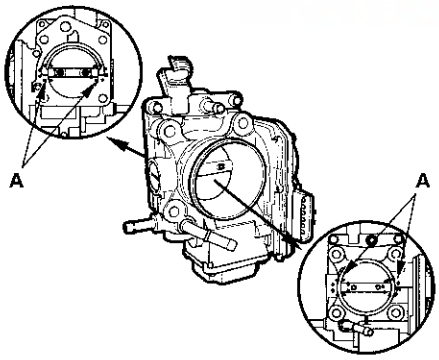

4. Install the throttle body (see page 11-372).
5. Reset the PCM with the HDS (see page 11-4).
6. Turn the ignition switch to ON (II), and wait 2 seconds.
7. Do the PCM idle learn procedure (see page 11-333).

Air Cleaner Removal/Installation

1. Disconnect the MAF sensor/IAT sensor connector (A).

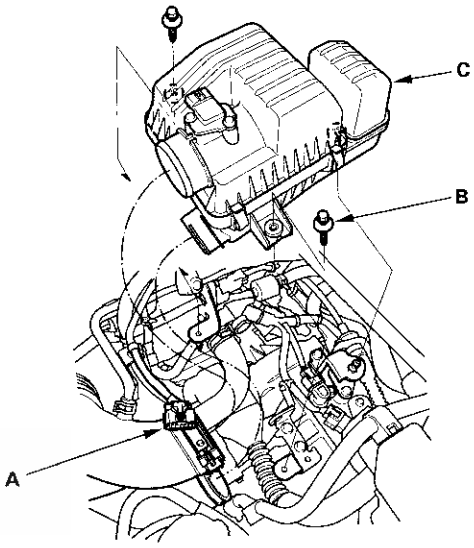

2. Remove the bolts (B).
3. Remove the air cleaner housing (C).
4. Install the parts in the reverse order of removal.

Air Cleaner Element Inspection/ Replacement

1. Open the air cleaner housing cover (A).

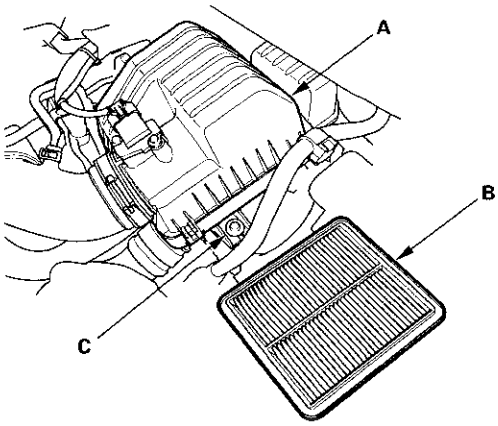

2. Remove the air cleaner element (B) from the air cleaner housing (C).

3. Check the air cleaner element for damage or clogging. If there is damage or clogging, replace the air cleaner element.

   NOTE: Do not use compressed air to clean the air cleaner element.

4. Clean and remove any debris from the inside of the air cleaner.

5. Install the parts in the reverse order of removal.

   - If you did not replace the air cleaner element, this procedure is complete.
   - If the maintenance minder required air cleaner replacement, reset the maintenance minder (see page 3-6).
   - If you replace the air cleaner element, reset the PCM (see page 11-4), and do the PCM idle learn procedure (see page 11-333).

Intake Air Resonator Removal/ Installation

1. Remove the engine cover.

2. Remove the bolts (A).

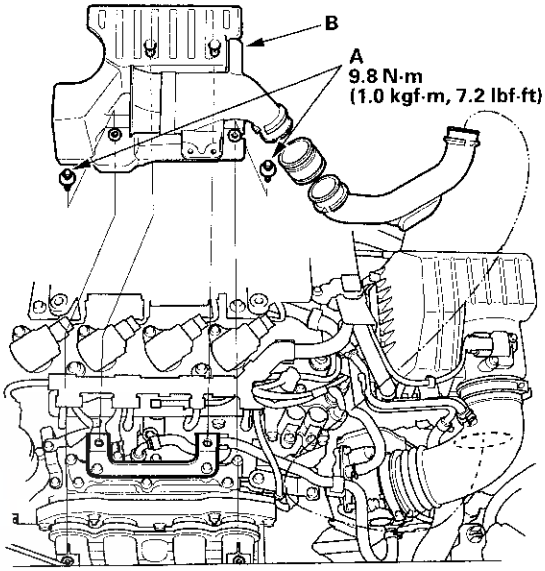

3. Remove the intake air resonator (B).

4. Install the parts in the reverse order of removal.

Throttle Body Removal/Installation

⚠CAUTION

Do not insert your fingers into the installed throttle body when you turn the ignition switch to ON (II) or while the ignition switch is ON (II). If you do, you will seriously injure your fingers if the throttle valve is activated.

NOTE: If you are replacing or cleaning the throttle body, start at step 1. If you are removing the throttle body, start at step 4.

1. Connect the HDS to the DLC while the engine is stopped.
2. Select the INSPECTION MENU on the HDS.
3. Do the TP POSITION CHECK in the ETCS TEST.
4. Turn the ignition switch to LOCK (0).
5. Remove the cowl cover (see step 2 on page 20-140) and the under-cowl panel (see step 4 on page 20-140).
6. Remove the air cleaner (see page 11-370), and the intake air duct (A).

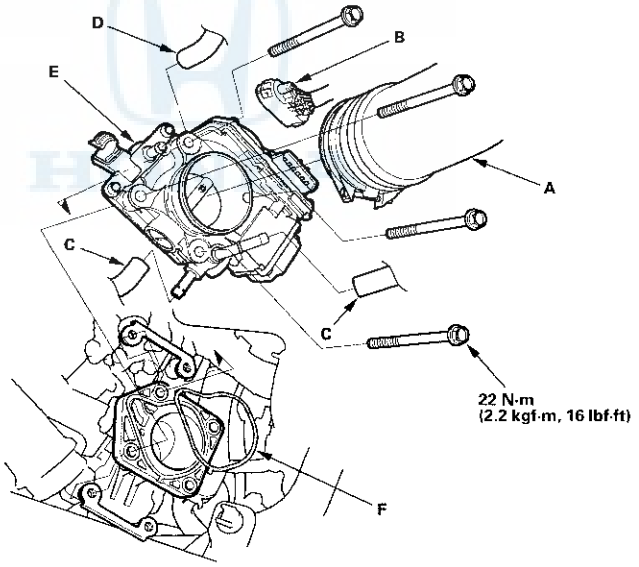

7. Disconnect the throttle body connector (B).
8. Disconnect and plug the water bypass hoses (C) and the vacuum hose (D).
9. Remove the throttle body (E).
10. Install the parts in the reverse order of removal with a new gasket (F), then do this:
    - Refill the radiator with engine coolant (see page 10-6).
    - Do the PCM idle learn procedure (see page 11-333).

Throttle Body Disassembly/Reassembly

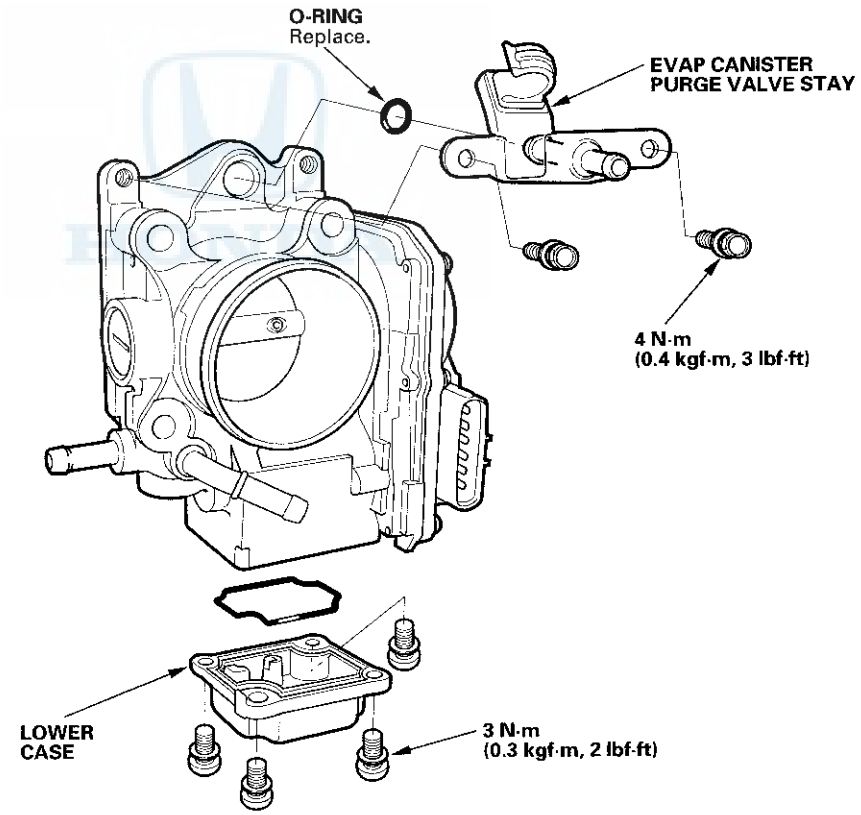

Catalytic Converter System

Component Location Index

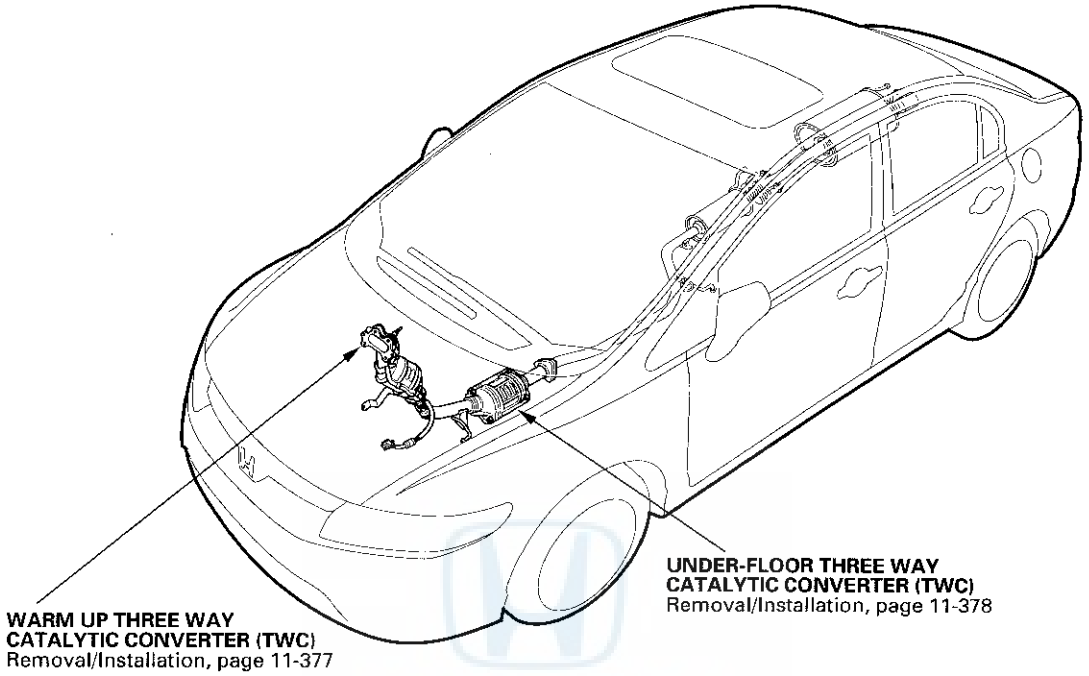

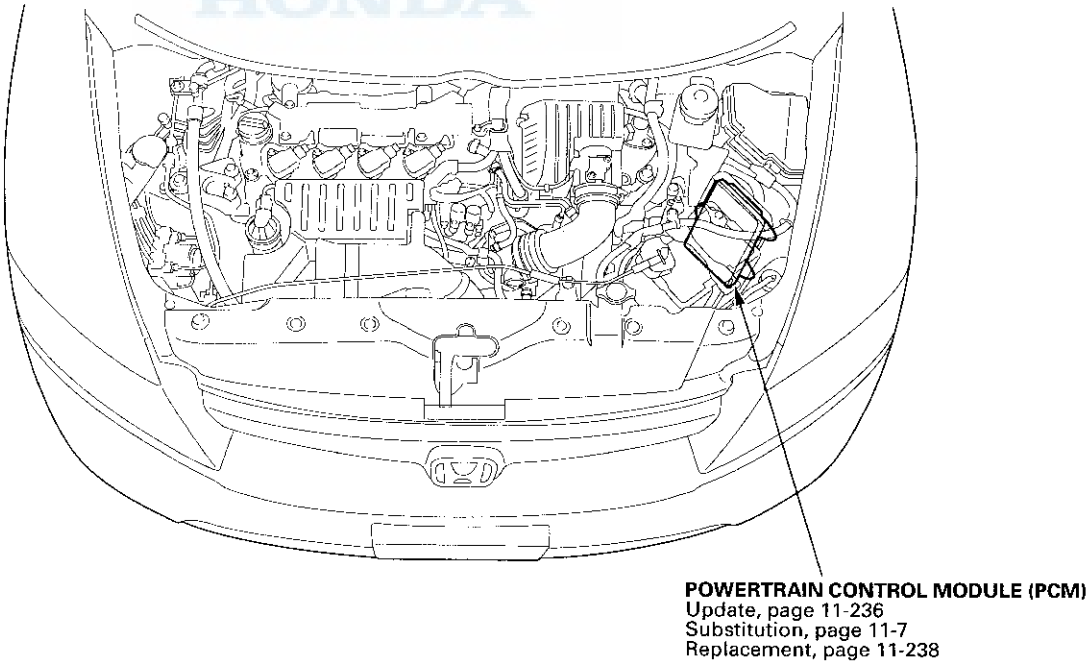

DTC Troubleshooting

DTC P0420: Catalyst System Efficiency Below Threshold

NOTE:
- Before you troubleshoot, record all freeze data and any on-board snapshot, and review the general troubleshooting information (see page 11-3).
- If some of the DTCs listed below are stored at the same time as DTC P0420, troubleshoot them first, then recheck for DTC P0420.
  P0137, P0138: Secondary HO2S (Sensor 2)
  P0141: Secondary HO2S (Sensor 2) heater
- Poor quality fuel may cause this DTC.

1. Turn the ignition switch to ON (II).

2. Clear the DTC with the HDS.

3. Start the engine. Hold the engine speed at 3,000 rpm without load (in P or N) until the radiator fan comes on, then let it idle.

4. Test-drive under these conditions:

   - Engine coolant temperature (ECT SENSOR 1) above 158 °F (70 °C)
   - Transmission in D
   - Vehicle speed between 45—75 mph (72—120 km/h) for 5 minutes or more with cruise control set
   - Maintain the vehicle speed at 55 mph (88 km/h) for 5 minutes or more with cruise control set

5. Monitor the OBD STATUS for DTC P0420 in the DTCs MENU with the HDS.

   Does the screen indicate EXECUTING?

   YES△Go to step 6.

   NO△If the screen indicates OUT OF CONDITION, go to step 4 and recheck. If the screen indicates PASSED, intermittent failure the system is OK at this time. If the screen indicates FAILED, go to step 8.

6. Continue test-drive until a result comes on.

7. Monitor the OBD STATUS for DTC P0420 in the DTCs MENU with the HDS.

   Does the screen indicate FAILED?

   YES△Go to step 8.

   NO△If the screen indicates PASSED, intermittent failure, the system is OK at this time. If the screen indicates EXECUTING, keep driving until a result comes on. If the screen indicates OUT OF CONDITION, go to step 4 and recheck.

8. Turn the ignition switch to LOCK (0).

9. Replace the WU-TWC (see page 11-377).

10. Turn the ignition switch to ON (II).

11. Reset the PCM with the HDS.

12. Do the PCM idle learn procedure (see page 11-333).

13. Start the engine. Hold the engine speed at 3,000 rpm without load (in P or N) until the radiator fan comes on, then let it idle.

14. Test-drive for about 10 minutes, varying the vehicle speed.

15. Check the CAT MONITOR CONDITION in the DATA LIST with the HDS.

    Is the condition OK?

    YES△Go to step 16.

    NO△Go to step 13 and recheck.

(cont'd)

DTC Troubleshooting (cont'd)

16. Test-drive under these conditions:

    - Engine coolant temperature (ECT SENSOR 1) above 158 °F (70 °C)
    - Transmission in D
    - Vehicle speed between 45—75 mph (72—120 km/h) for 5 minutes or more with cruise control set
    - Maintain the vehicle speed at 55 mph (88 km/h) for 5 minutes or more with cruise control set

17. Monitor the OBD STATUS for DTC P0420 in the DTCs MENU with the HDS.

    Does the screen indicate EXECUTING?

    YES△Go to step 18.

    NO△Go to step 16 and recheck.

18. Continue test-drive until a result comes on.

19. Check for Temporary DTCs or DTCs with the HDS.

    Is DTC P0420 indicated?

    YES△Check the fuel quality, and replace it if needed, then go to step 1.

    NO△Go to step 20.

20. Monitor the OBD STATUS for DTC P0420 in the DTCs MENU with the HDS.

    Does the screen indicate PASSED?

    YES△Troubleshooting is complete. If any other Temporary DTCs or DTCs were indicated in step 19, go to the indicated DTC's troubleshooting. ■

    NO△If the screen indicates FAILED, check for poor connections or loose terminals at the secondary HO2S (Sensor 2) and the PCM. If the screen indicates EXECUTING, keep driving until a result comes on. If the screen indicates OUT OF CONDITION, go to step 13.

Warm Up TWC Removal/Installation

1. Remove the A/F sensor (Sensor 1) (see page 11-230).

2. Remove the chamber cover.

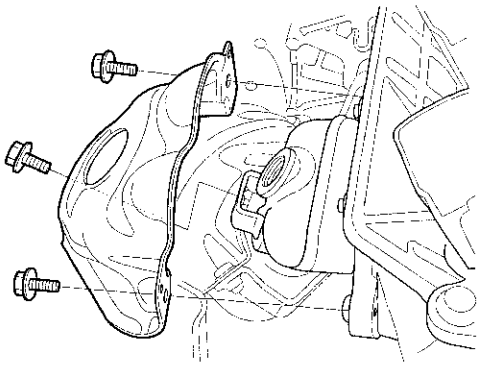

3. Remove the under-floor TWC (see page 11-378).

4. Remove the secondary HO2S (Sensor 2) (see page 11-230).

5. Remove the right driveshaft (see page 16-4), then remove the intermediate shaft (see page 16-22).

6. Remove the WU-TWC (A) and the gasket (B).

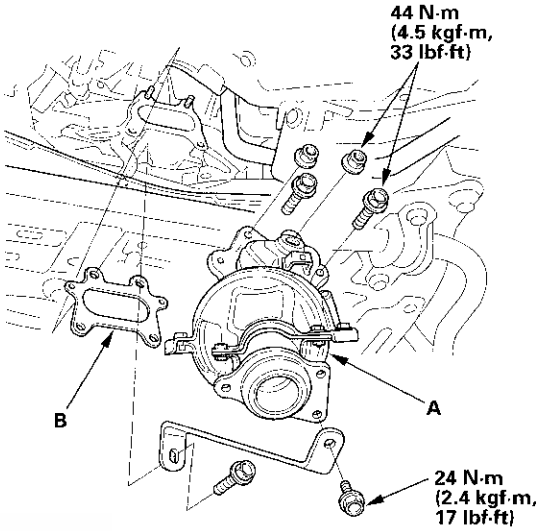

7. Remove the WU-TWC cover.

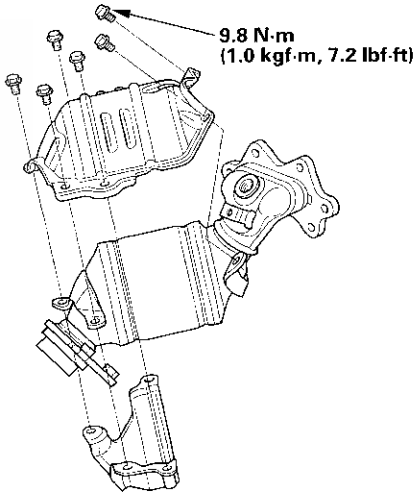

8. Install the parts in the reverse order of removal with a new gasket.

Under-floor TWC Removal/Installation

1. Remove the under-floor TWC (A).

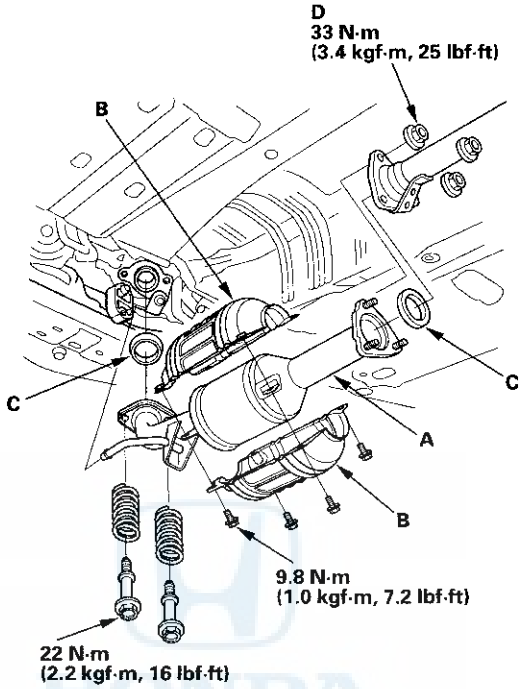

2. Remove the converter cover (B).

3. Install the parts in the reverse order of removal with the new gaskets (C) and the new self-locking nuts (D).

Component Location Index

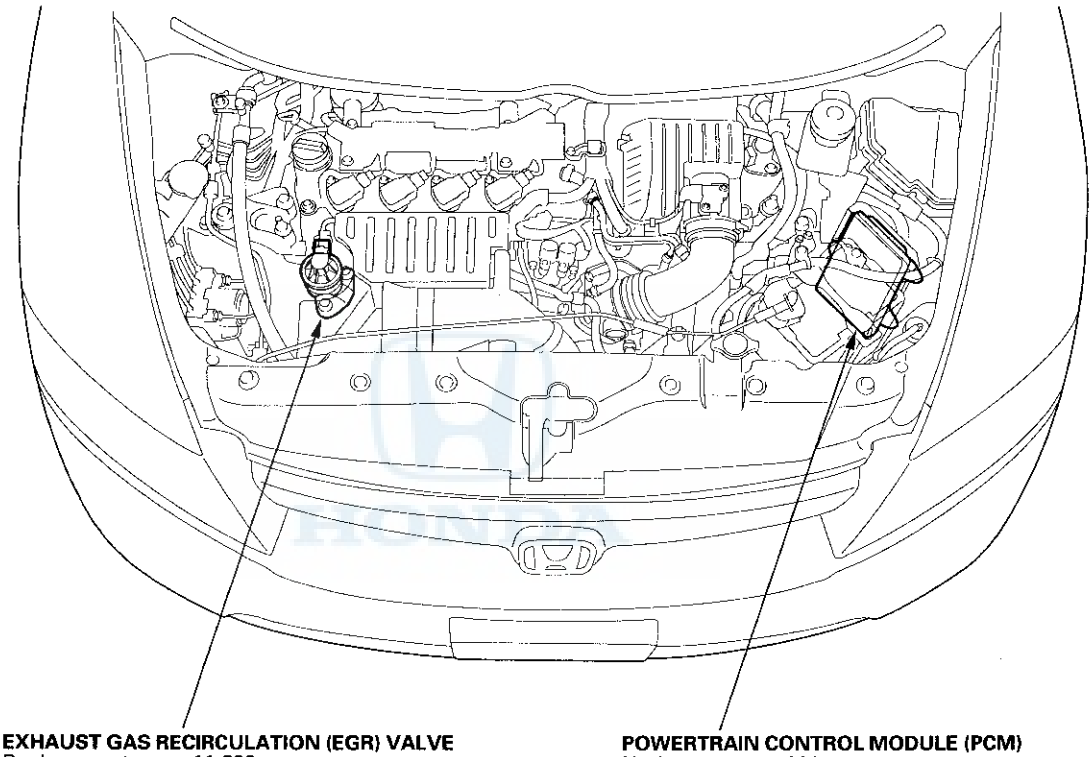

EXHAUST GAS RECIRCULATION (EGR) VALVE
Replacement, page 11-392

POWERTRAIN CONTROL MODULE (PCM)
Update, page 11-236
Substitution, page 11-7
Replacement, page 11-238

DTC Troubleshooting

DTC P0401: EGR Insufficient Flow

NOTE: Before you troubleshoot, record all freeze data and any on-board snapshot, and review the general troubleshooting information (see page 11-3).

1. Turn the ignition switch to ON (II).
2. Clear the DTC with the HDS.
3. Start the engine. Hold the engine speed at 3,000 rpm without load (in P or N) until the radiator fan comes on, then let it idle.
4. Do the EGR TEST in the INSPECTION MENU with the HDS.

   Is the result OK?

   YES△Go to step 5.

   NO△Go to step 7.
5. Test-drive under these conditions:
   - Engine coolant temperature (ECT SENSOR 1) above 158 °F (70 °C)
   - Transmission in D
   - Drive the vehicle at a steady speed between 55—75 mph (88—120 km/h) for at least 10 seconds
   - During the drive, decelerate (with the throttle fully closed) for 5 seconds
6. Monitor the OBD STATUS for DTC P0401 in the DTCs MENU with the HDS.

   Does the screen indicate FAILED?

   YES△Clean the intake manifold EGR port with throttle plate cleaner. Also, clean the passage inside the EGR valve with throttle plate cleaner, then go to step 9.

   NO△If the screen indicates PASSED, intermittent failure, the system is OK at this time. Check for poor connections or loose terminals at the EGR valve and the PCM. If the screen indicates EXECUTING, keep driving until a result comes on. If the screen indicates OUT OF CONDITION, go to step 5 and recheck.
7. Turn the ignition switch to LOCK (0).
8. Replace the EGR valve (see page 11-392).
9. Turn the ignition switch to ON (II).
10. Reset the PCM with the HDS.
11. Do the PCM idle learn procedure (see page 11-333).
12. Test-drive under these conditions:
    - Engine coolant temperature (ECT SENSOR 1) above 158 °F (70 °C)
    - Transmission in D
    - Drive the vehicle at a steady speed between 55—75 mph (88—120 km/h) for at least 10 seconds
    - During the drive, decelerate (with the throttle fully closed) for 5 seconds
13. Check for Temporary DTCs or DTCs with the HDS.

    Is DTC P0401 indicated?

    YES△Check for poor connections or loose terminals at the EGR valve and the PCM. If the connections are OK, go to step 15.

    NO△Go to step 14.
14. Monitor the OBD STATUS for DTC P0401 in the DTCs MENU with the HDS.

    Does the screen indicate PASSED?

    YES△Troubleshooting is complete. If any other Temporary DTCs or DTCs were indicated in step 13, go to the indicated DTC's troubleshooting. ■

    NO△If the screen indicates FAILED, check for poor connections or loose terminals at the EGR valve and the PCM, then go to step 1. If the screen indicates EXECUTING, keep driving until a result comes on. If the screen indicates OUT OF CONDITION, go to step 12.

15. Update the PCM if it does not have the latest software (see page 11-236), or substitute a known-good PCM (see page 11-7).

16. Test-drive under these conditions:

    - Engine coolant temperature (ECT SENSOR 1) above 158 °F (70 °C)
    - Transmission in D
    - Drive the vehicle at a steady speed between 55—75 mph (88—120 km/h) for at least 10 seconds
    - During the drive, decelerate (with the throttle fully closed) for 5 seconds

17. Check for Temporary DTCs or DTCs with the HDS.

    Is DTC P0401 indicated?

    YES△Check for poor connections or loose terminals at the EGR valve and the PCM. If the PCM was updated, substitute a known-good PCM (see page 11-7), then go to step 16. If the PCM was substituted, go to step 1.

    NO△Go to step 18.

18. Monitor the OBD STATUS for DTC P0401 in the DTCs MENU with the HDS.

    Does the screen indicate PASSED?

    YES△If the PCM was updated, troubleshooting is complete. If the PCM was substituted, replace the original PCM (see page 11-238). If any other Temporary DTCs or DTCs were indicated in step 17, go to the indicated DTC's troubleshooting.■

    NO△If the screen indicates FAILED, check for poor connections or loose terminals at the EGR valve and the PCM. If the PCM was updated, substitute a known-good PCM (see page 11-7), then go to step 16. If the PCM was substituted, go to step 1. If the screen indicates EXECUTING, keep driving until a result comes on. If the screen indicates OUT OF CONDITION, go to step 16.

DTC P0404: EGR Valve Circuit Range/ Performance Problem

NOTE: Before you troubleshoot, record all freeze data and any on-board snapshot, and review the general troubleshooting information (see page 11-3).

1. Turn the ignition switch to ON (II).

2. Clear the DTC with the HDS.

3. Start the engine. Hold the engine speed at 3,000 rpm without load (in P or N) until the radiator fan comes on, then let it idle.

4. Do the EGR TEST in the INSPECTION MENU with the HDS.

   Is the result OK?

   YES△Intermittent failure, the system is OK at this time. Clean any carbon build-up on the EGR valve with throttle plate cleaner.■

   NO△Go to step 5.

5. Turn the ignition switch to LOCK (0).

6. Disconnect the EGR valve 6P connector.

7. At the EGR valve side, measure the resistance between EGR valve 6P connector terminals No. 1 and No. 2.

EGR VALVE 6P CONNECTOR

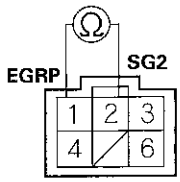

Terminal side of male terminals

Is there 100 kΩ or more?

YES△Go to step 25.

NO△Go to step 8.

(cont'd)

DTC Troubleshooting (cont'd)

8. At the EGR valve side, measure the resistance between EGR valve 6P connector terminals No. 1 and No. 3.

EGR VALVE 6P CONNECTOR

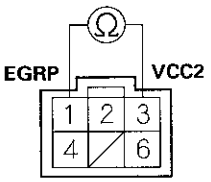

Terminal side of male terminals

Is there 100 kΩ or more?

YES△Go to step 25.

NO△Go to step 9.

9. Check for continuity between EGR valve 6P connector terminal No. 6 and body ground.

EGR VALVE 6P CONNECTOR

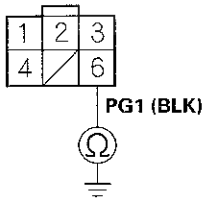

Wire side of female terminals

Is there continuity?

YES△Go to step 10.

NO△Repair open in the wire between the EGR valve and G102 (see page 22-16), then go to step 26.

10. Jump the SCS line with the HDS.

11. Disconnect PCM connector B (44P).

12. Check for continuity between PCM connector terminal B2 and body ground.

PCM CONNECTOR B (44P)

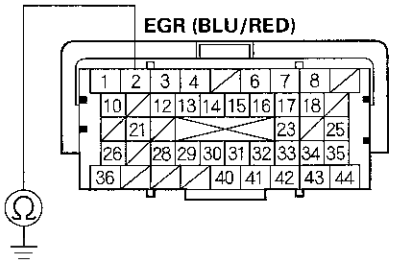

Terminal side of female terminals

Is there continuity?

YES△Repair short in the wire between the PCM (B2) and the EGR valve, then go to step 26.

NO△Go to step 13.

13. Check for continuity between PCM connector terminal B2 and EGR valve 6P connector terminal No. 4.

EGR VALVE 6P CONNECTOR

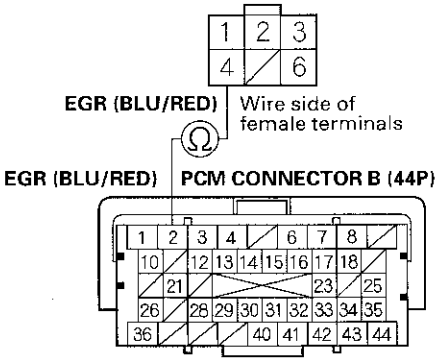

Terminal side of female terminals

Is there continuity?

YES△Go to step 14.

NO△Repair open in the wire between the PCM (B2) and the EGR valve, then go to step 26.

14. Remove the EGR valve (see page 11-392).

15. Clean the intake manifold EGR port with throttle plate cleaner. Also, clean the passage inside the EGR valve with throttle plate cleaner.

16. Install the EGR valve (see page 11-392).

17. Reconnect the EGR valve 6P connector.

18. Reconnect PCM connector B (44P).

19. Turn the ignition switch to ON (II).

20. Reset the PCM with the HDS.

21. Do the PCM idle learn procedure (see page 11-333).

22. Start the engine. Hold the engine speed at 3,000 rpm without load (in P or N) until the radiator fan comes on, then let it idle.

23. Do the EGR TEST in the INSPECTION MENU with the HDS.

    Is the result OK?

    YES△Go to step 32.

    NO△Go to step 24.

24. Turn the ignition switch to LOCK (0).

25. Replace the EGR valve (see page 11-392).

26. Reconnect all connectors.

27. Turn the ignition switch to ON (II).

28. Reset the PCM with the HDS.

29. Do the PCM idle learn procedure (see page 11-333).

30. Start the engine. Hold the engine speed at 3,000 rpm without load (in P or N) until the radiator fan comes on, then let it idle.

31. Do the EGR TEST in the INSPECTION MENU with the HDS.

32. Check for Temporary DTCs or DTCs with the HDS.

    If DTC P0404 is indicated?

    YES△Check for poor connections or loose terminals at the EGR valve and the PCM, then go to step 1. If the connections and terminals are OK, go to step 34.

    NO△Go to step 33.

33. Monitor the OBD STATUS for DTC P0404 in the DTCs MENU with the HDS.

    Does the screen indicate PASSED?

    YES△Troubleshooting is complete. If any other Temporary DTCs or DTCs were indicated in step 32, go to the indicated DTC's troubleshooting. ■

    NO△If the screen indicates FAILED, check for poor connections or loose terminals at the EGR valve and the PCM, then go to step 1. If the screen indicates EXECUTING, keep idling until a result comes on. If the screen indicates OUT OF CONDITION, go to step 30.

(cont'd)

DTC Troubleshooting (cont'd)

34. Update the PCM if it does not have the latest software (see page 11-236), or substitute a known-good PCM (see page 11-7).

35. Start the engine. Hold the engine speed at 3,000 rpm without load (in P or N) until the radiator fan comes on, then let it idle.

36. Do the EGR TEST in the INSPECTION MENU with the HDS.

37. Check for Temporary DTCs or DTCs with the HDS.

    Is DTC P0404 indicated?

    YES△Check for poor connections or loose terminals at the EGR valve and the PCM. If the PCM was updated, substitute a known-good PCM (see page 11-7), then go to step 35. If the PCM was substituted, go to step 1.

    NO△Go to step 38.

38. Monitor the OBD STATUS for DTC P0404 in the DTCs MENU with the HDS.

    Does the screen indicate PASSED?

    YES△If the PCM was updated, troubleshooting is complete. If the PCM was substituted, replace the original PCM (see page 11-238). If any other Temporary DTCs or DTCs were indicated in step 37, go to the indicated DTC's troubleshooting.■

    NO△If the screen indicates FAILED, check for poor connections or loose terminals at the EGR valve and the PCM. If the PCM was updated, substitute a known-good PCM (see page 11-7), then go to step 35. If the PCM was substituted, go to step 1. If the screen indicates EXECUTING, keep idling until a result comes on. If the screen indicates OUT OF CONDITION, go to step 35.

DTC P0406: EGR Valve Position Sensor Circuit High Voltage

NOTE: Before you troubleshoot, record all freeze data and any on-board snapshot, and review the general troubleshooting information (see page 11-3).

1. Turn the ignition switch to ON (II).

2. Check the EGR VLS in the DATA LIST with the HDS.

   Is 4.88 V or more indicated?

   YES△Go to step 3.

   NO△Intermittent failure, the system is OK at this time. Check for poor connections or loose terminals at the EGR valve and the PCM.■

3. Turn the ignition switch to LOCK (0).

4. Disconnect the EGR valve 6P connector.

5. Turn the ignition switch to ON (II).

6. Measure the voltage between EGR valve 6P connector terminals No. 2 and No. 3.

EGR VALVE 6P CONNECTOR

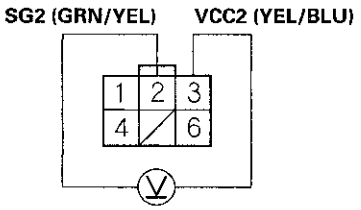

Wire side of female terminals

Is there about 5 V?

YES△Go to step 11.

NO△Go to step 7.

7. Turn the ignition switch to LOCK (0).

8. Jump the SCS line with the HDS.

9. Disconnect PCM connector B (44P).

10. Check for continuity between PCM connector terminal B33 and EGR valve 6P connector terminal No. 2.

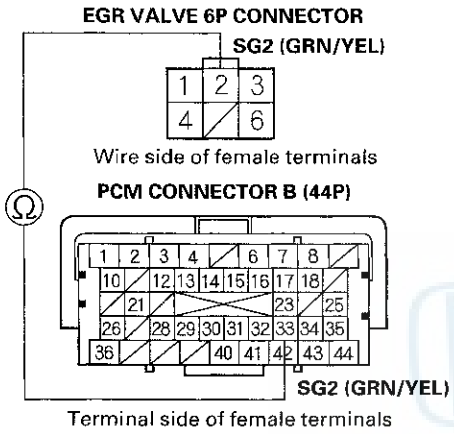

Is there continuity?

YES△Go to step 18.

NO△Repair open in the wire between the EGR valve and the PCM (B33), then go to step 13.

11. Turn the ignition switch to LOCK (0).

12. Replace the EGR valve (see page 11-392).

13. Reconnect all connectors.

14. Turn the ignition switch to ON (II).

15. Reset the PCM with the HDS.

16. Do the PCM idle learn procedure (see page 11-333).

17. Check for Temporary DTCs or DTCs with the HDS.

Is DTC P0406 indicated?

YES△Check for poor connections or loose terminals at the EGR valve and the PCM, then go to step 1.

NO△Troubleshooting is complete. If any other Temporary DTCs or DTCs are indicated, go to the indicated DTC's troubleshooting.■

18. Reconnect all connectors.

19. Update the PCM if it does not have the latest software (see page 11-236), or substitute a known-good PCM (see page 11-7).

20. Check for Temporary DTCs or DTCs with the HDS.

Is DTC P0406 indicated?

YES△Check for poor connections or loose terminals at the EGR valve and the PCM. If the PCM was updated, substitute a known-good PCM (see page 11-7), then recheck. If the PCM was substituted, go to step 1.

NO△If the PCM was updated, troubleshooting is complete. If the PCM was substituted, replace the original PCM (see page 11-238). If any other Temporary DTCs or DTCs are indicated, go to the indicated DTC's troubleshooting.■

DTC Troubleshooting (cont'd)

DTC P2413: EGR System Malfunction

NOTE: Before you troubleshoot, record all freeze data and any on-board snapshot, and review the general troubleshooting information (see page 11-3).

1. Turn the ignition switch to ON (II).
2. Clear the DTC with the HDS.
3. Start the engine. Hold the engine speed at 3,000 rpm without load (in P or N) until the radiator fan comes on, then let it idle.
4. Do the EGR TEST in the INSPECTION MENU with the HDS.

   Is the result OK?

   YES△Intermittent failure, the system is OK at this time. Check for poor connections or loose terminals at the EGR valve and the PCM. ■

   NO△Go to step 5.
5. Turn the ignition switch to LOCK (0).
6. Turn the ignition switch to ON (II).
7. Check the EGR VLS in the DATA LIST with the HDS.

   Is about 0 V indicated?

   YES△Go to step 8.

   NO△Go to step 21.
8. Turn the ignition switch to LOCK (0).
9. Disconnect the EGR valve 6P connector.
10. Turn the ignition switch to ON (II).
11. Measure the voltage between EGR valve 6P connector terminal No. 3 and body ground.

EGR VALVE 6P CONNECTOR

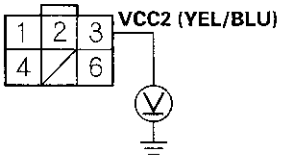

Wire side of female terminals

Is there about 5 V?

YES△Go to step 16.

NO△Go to step 12.

12. Turn the ignition switch to LOCK (0).

13. Jump the SCS line with the HDS.

14. Disconnect PCM connector B (44P).

15. Check for continuity between PCM connector terminal B18 and EGR valve 6P connector terminal No. 3.

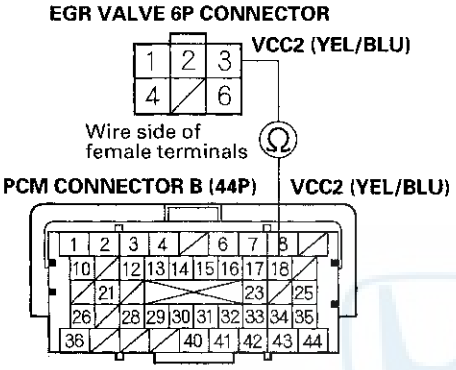

Terminal side of female terminals

Is there continuity?

YES△Go to step 51.

NO△Repair open in the wire between the EGR valve and the PCM (B18), then go to step 44.

16. Turn the ignition switch to LOCK (0).

17. Jump the SCS line with the HDS.

18. Disconnect PCM connector B (44P).

19. Check for continuity between PCM connector terminal B29 and body ground.

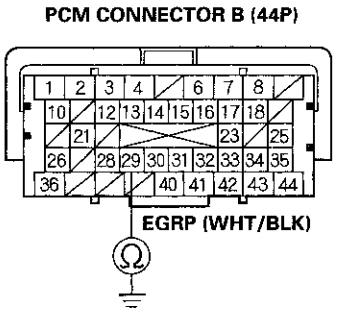

Terminal side of female terminals

Is there continuity?

YES△Repair short in the wire between the PCM (B29) and the EGR valve, then go to step 44.

NO△Go to step 20.

(cont'd)

DTC Troubleshooting (cont'd)

20. Check for continuity between PCM connector terminal B29 and EGR valve 6P connector terminal No. 1.

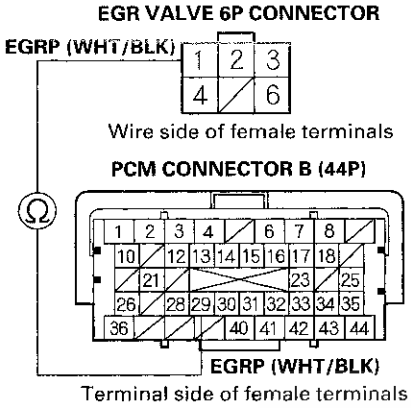

Is there continuity?

YES△Go to step 21.

NO△Repair open in the wire between the PCM (B29) and the EGR valve, then go to step 44.

21. Turn the ignition switch to LOCK (0).

22. If not already done, disconnect the EGR valve 6P connector.

23. At the EGR valve side, measure the resistance between EGR valve 6P connector terminals No. 1 and No. 2.

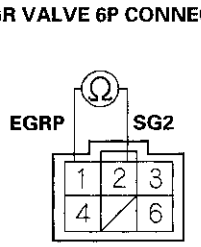

Terminal side of male terminals

Is there 100 kΩ or more?

YES△Go to step 43.

NO△Go to step 24.

24. At the EGR valve side, measure the resistance between EGR valve 6P connector terminals No. 1 and No. 3.

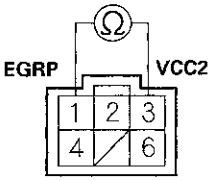

Terminal side of male terminals

Is there 100 kΩ or more?

YES△Go to step 43.

NO△Go to step 25.

25. If not already done, jump the SCS line with the HDS.

26. If not already done, disconnect PCM connector B (44P).

27. Check for continuity between PCM connector terminal B2 and body ground.

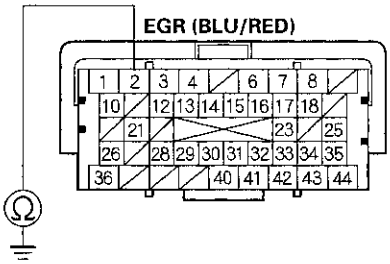

Terminal side of male terminals

Is there continuity?

YES△Repair short in the wire between the PCM (B2) and the EGR valve, then go to step 44.

NO△Go to step 28.

28. Check for continuity between PCM connector terminal B2 and EGR valve 6P connector terminal No. 4.

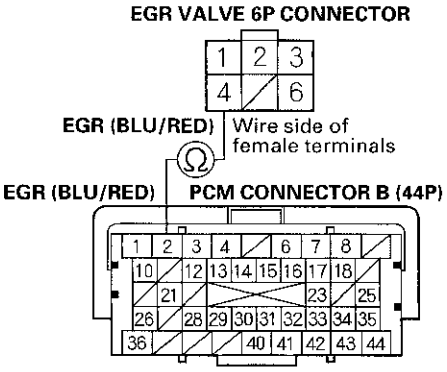

Is there continuity?

YES△Go to step 29.

NO△Repair open in the wire between the PCM (B2) and the EGR valve, then go to step 44.

29. Check for continuity between EGR valve 6P connector terminal No. 6 and body ground.

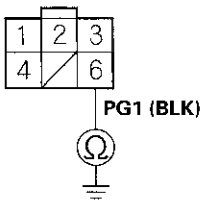

Is there continuity?

YES△Go to step 30.

NO△Repair open in the wire between the EGR valve and G102 (see page 22-16), then go to step 44.

30. Reconnect PCM connector B (44P).

31. At the EGR valve side, connect the battery positive terminal to EGR valve 6P connector terminal No. 4 with a jumper wire.

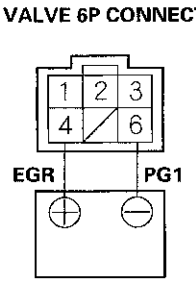

32. Start the engine, and let it idle. Then connect the battery negative terminal to EGR valve 6P connector terminal No. 6 with a jumper wire.

Does the engine stall or run roughly?

YES△Go to step 51.

NO△Go to step 33.

(cont'd)

DTC Troubleshooting (cont'd)

33. Turn the ignition switch to LOCK (0).

34. Remove the EGR valve (see page 11-392).

35. Clean the intake manifold EGR port with throttle plate cleaner. Also, clean the passage inside the EGR valve with throttle plate cleaner.

36. Install the EGR valve (see page 11-392).

37. Reconnect all connectors.

38. Turn the ignition switch to ON (II).

39. Reset the PCM with the HDS.

40. Do the PCM idle learn procedure (see page 11-333).

41. Do the EGR TEST in the INSPECTION MENU with the HDS.

    Is the result OK?

    YES△Go to step 49.

    NO△Go to step 42.

42. Turn the ignition switch to LOCK (0).

43. Replace the EGR valve (see page 11-392).

44. Reconnect all connectors.

45. Turn the ignition switch to ON (II).

46. Reset the PCM with the HDS.

47. Do the PCM idle learn procedure (see page 11-333).

48. Do the EGR TEST in the INSPECTION MENU with the HDS.

49. Check for Temporary DTCs or DTCs with the HDS.

    Is DTC P2413 indicated?

    YES△Check for poor connections or loose terminals at the EGR valve and the PCM, then go to step 1.

    NO△Go to step 50.

50. Monitor the OBD STATUS for DTC P2413 in the DTCs MENU with the HDS.

    Does the screen indicate PASSED?

    YES△Troubleshooting is complete. If any other Temporary DTCs or DTCs were indicated in step 49, go to the indicated DTC's troubleshooting.■

    NO△If the screen indicates FAILED, check for poor connections or loose terminals at the EGR valve and the PCM, then go to step 1. If the screen indicates EXECUTING, keep idling until a result comes on. If the screen indicates OUT OF CONDITION, go to step 47.

51. Reconnect all connectors.

52. Update the PCM if it does not have the latest software (see page 11-236), or substitute a known-good PCM (see page 11-7).

53. Do the EGR TEST in the INSPECTION MENU with the HDS.

54. Check for Temporary DTCs or DTCs with the HDS.

    Is DTC P2413 indicated?

    YES△Check for poor connections or loose terminals at the EGR valve and the PCM. If the PCM was updated, substitute a known-good PCM (see page 11-7), then go to step 53. If the PCM was substituted, go to step 1.

    NO△Go to step 55.

55. Monitor the OBD STATUS for DTC P2413 in the DTCs MENU with the HDS.

    Does the screen indicate PASSED?

    YES△If the PCM was updated, troubleshooting is complete. If the PCM was substituted, replace the original PCM (see page 11-238). If any other Temporary DTCs or DTCs were indicated in step 54, go to the indicated DTC's troubleshooting. ■

    NO△If the screen indicates FAILED, check for poor connections or loose terminals at the EGR valve and the PCM. If the PCM was updated, substitute a known-good PCM (see page 11-7), then go to step 53. If the PCM was substituted, go to step 1. If the screen indicates EXECUTING, keep idling until a result comes on. If the screen indicates OUT OF CONDITION, go to step 53.

EGR Valve Replacement

1. Remove the EGR valve 6P connector (A).

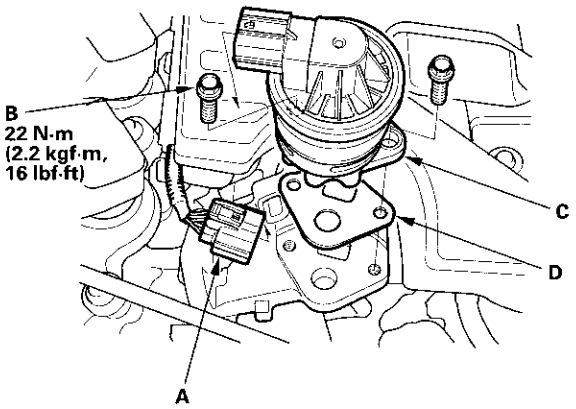

2. Remove the bolts (B).
3. Remove the EGR valve (C).
4. Install the parts in the reverse order of removal with a new gasket (D).

Component Location Index

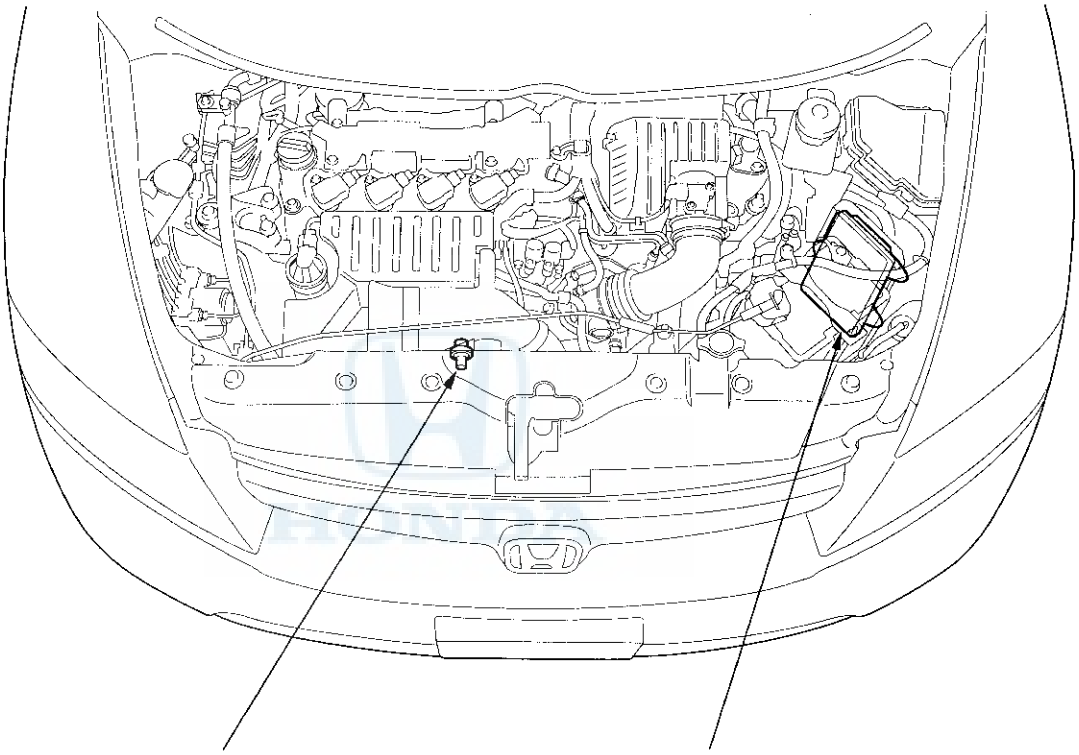

PCV VALVE
Inspection, page 11-396
Replacement, page 11-396

POWERTRAIN CONTROL MODULE (PCM)
Update, page 11-236
Substitution, page 11-7
Replacement, page 11-238

DTC Troubleshooting

DTC P2279: Intake Air System Leak Detected

NOTE: Before you troubleshoot, record all freeze data and any on-board snapshot, and review the general troubleshooting information (see page 11-3).

1. Turn the ignition switch to ON (II).

2. Check for Temporary DTCs or DTCs with the HDS.

   Are DTC P2279 and DTC P0101 or P0106 indicated at the same time?

   YES△Go to the indicated DTC's troubleshooting.■

   NO△Go to step 3.

3. Check for vacuum leaks at these parts:

   - PCV valve
   - PCV hose
   - Purge (PCS) line
   - Throttle body
   - Intake manifold

   Are there any leaks?

   YES△Repair or replace the damaged part(s), then go to step 14.

   NO△Go to step 4.

4. Start the engine. Hold the engine speed at 3,000 rpm without load (in P or N) until the radiator fan comes on, then let it idle for 1 minute.

5. Monitor the OBD STATUS for DTC P2279 in the DTCs MENU with the HDS.

   Does the screen indicate FAILED?

   YES△Go to step 7.

   NO△If the screen indicates PASSED, go to step 6. If the screen indicates NOT COMPLETED, go to step 4 and recheck.

6. Monitor the OBD STATUS for DTC P0507 in the DTCs MENU with the HDS.

   Does the screen indicate FAILED?

   YES△Go to step 7.

   NO△If the screen indicates PASSED, intermittent failure, the system is OK at this time. If the screen indicates EXECUTING, keep idling until a result comes on. If the screen indicates OUT OF CONDITION, go to step 4 and recheck.

7. Do the PCS ON/OFF in the INSPECTION MENU with the HDS.

8. Listen for a clicking sound at the EVAP canister purge valve.

   Does the valve click?

   YES△Go to step 9.

   NO△Replace the EVAP canister purge valve (see page 11-426), then go to step 14.

9. Do the PCV valve test (see page 11-396).

   Is the test OK?

   YES△Go to step 10.

   NO△Replace the PCV valve (see page 11-396), then go to step 14.

10. Remove the air cleaner (see page 11-370).

11. Check for cracks or other damage at the air cleaner.

    Is the air cleaner OK?

    YES△Go to step 12.

    NO△Replace the air cleaner (see page 11-370), then go to step 4.

12. Remove the air cleaner element.

13. Check for damage to the air cleaner element.

    Is the air cleaner element OK?

    YES△Check the camshaft timing (see page 6-10), then go to step 14.

    NO△Replace the air cleaner element (see page 11-371), then go to step 14.

14. Reset the PCM with the HDS.

15. Do the PCM idle learn procedure (see page 11-333).

16. Start the engine. Hold the engine speed at 3,000 rpm without load (in P or N) until the radiator fan comes on, then let it idle for 1 minute.

17. Check for Temporary DTCs or DTCs with the HDS.

    Is DTC P2279 indicated?

    YES△Check for vacuum leaks at the PCV valve, the PCV hose, the purge (PCS) line, the throttle body, the brake booster hose, and the intake manifold, then go to step 1.

    NO△Go to step 18.

18. Monitor the OBD STATUS for DTC P2279 in the DTCs MENU with the HDS.

    Does the screen indicate PASSED?

    YES△Troubleshooting is complete. If any other Temporary DTCs or DTCs were indicated in step 17, go to the indicated DTC's troubleshooting.■

    NO△If the screen indicates FAILED, go to step 1 and recheck. If the screen indicates NOT COMPLETED, go to step 16.

PCV System

PCV Valve Inspection

1. Check the PCV valve (A), hoses (B), and connections for leaks or restrictions.

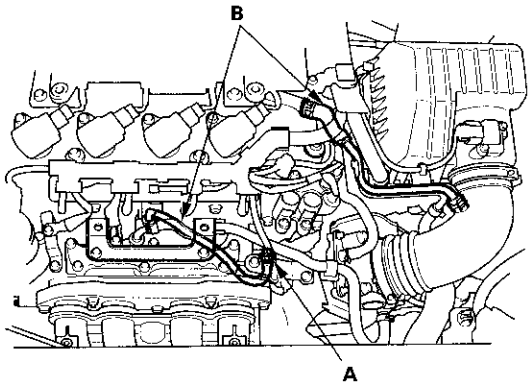

2. At idle, make sure there is a clicking sound from the PCV valve when the hose between the PCV valve and intake manifold is lightly pinched (A) with your fingers or pliers.
   If there is no clicking sound, check the hose for cracks or damage. If the hose is OK, replace the PCV valve and recheck.

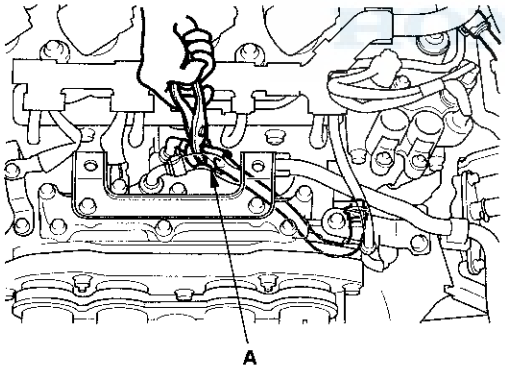

PCV Valve Replacement

1. Remove the intake manifold (see page 9-2).
2. Disconnect the PCV hose (A), then unscrew the PCV valve (B), and remove it.

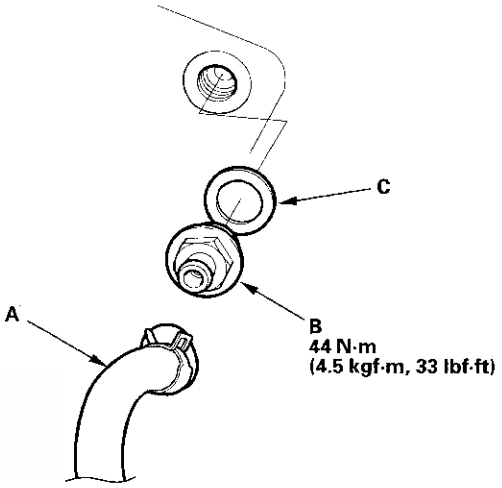

3. Install the parts in the reverse order of removal with a new washer (C).

Component Location Index

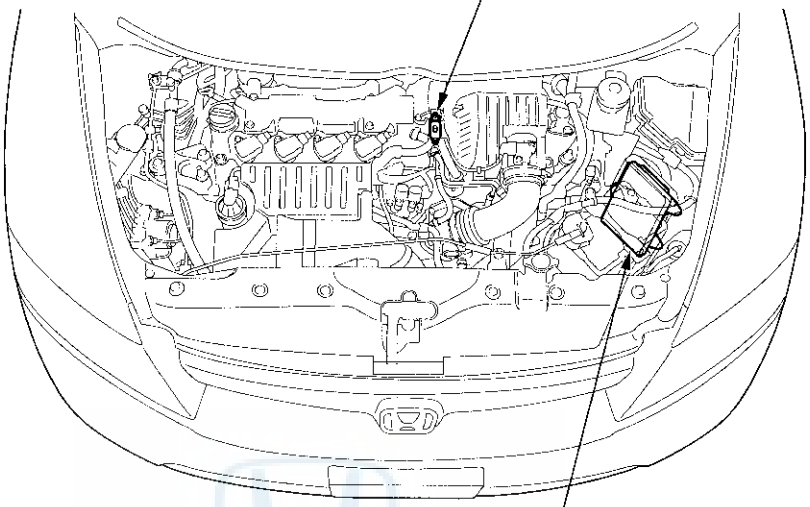

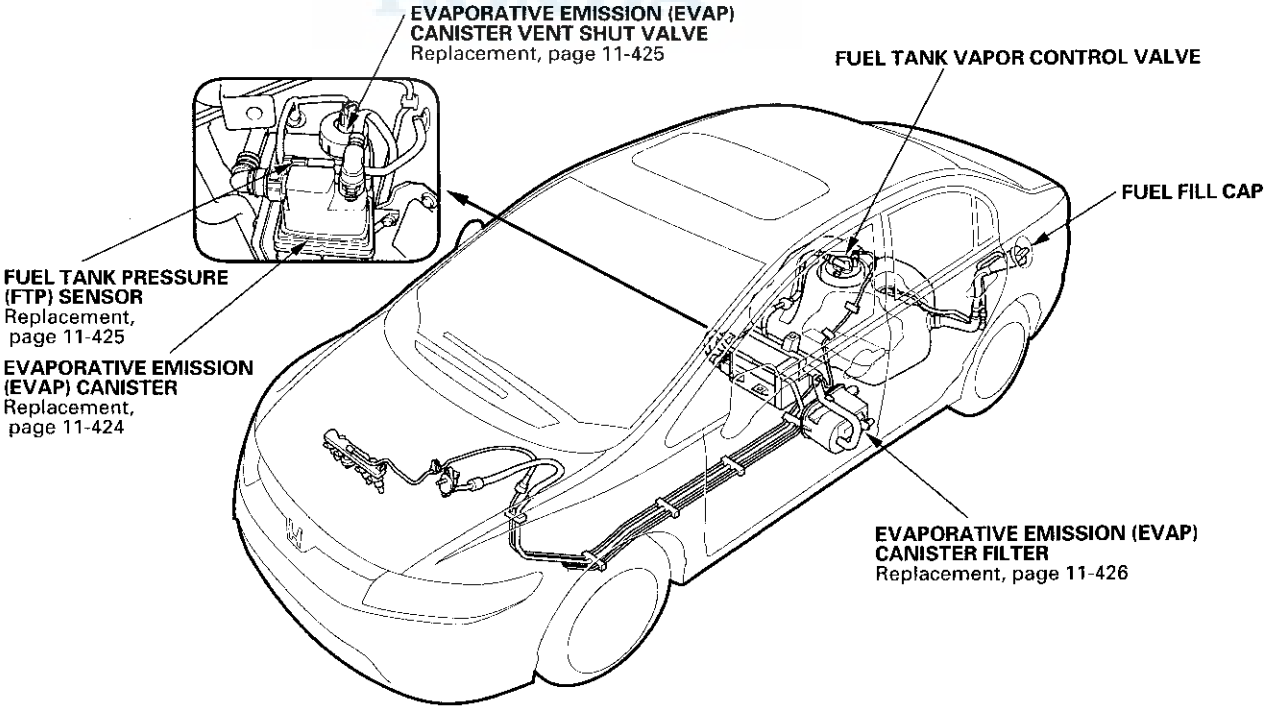

DTC Troubleshooting

DTC P0443: EVAP Canister Purge Valve Circuit Malfunction

Special Tools Required
Vacuum pump/gauge, 0—30 in.Hg, Snap-on YA4000A or equivalent, commercially available

NOTE: Before you troubleshoot, record all freeze data and any on-board snapshot, and review the general troubleshooting information (see page 11-3).

1. Turn the ignition switch to ON (II).
2. Clear the DTC with the HDS.
3. Start the engine. Hold the engine speed at 3,000 rpm without load (in P or N) until the radiator fan comes on, then let it idle.
4. Check for Temporary DTCs or DTCs with the HDS.

   Is DTC P0443 indicated?

   YES△Go to step 5.

   NO△Intermittent failure, the system is OK at this time. Check for poor connections or loose terminals at the EVAP canister purge valve and the PCM.■

5. Turn the ignition switch to LOCK (0), and allow the engine to cool below 113 ℉ (45 ℃).
6. Disconnect the vacuum hose (A) from the EVAP canister purge valve (B) in the engine compartment, and connect a vacuum pump/gauge, 0—30 in.Hg, to the hose.

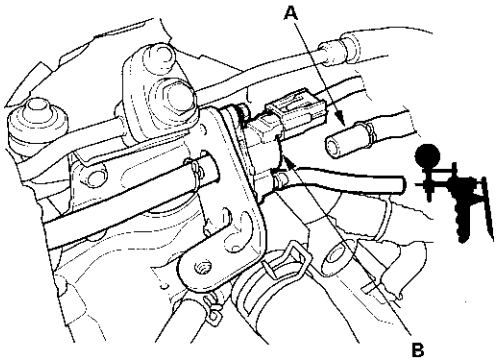

7. Start the engine, and let it idle.

   Is there vacuum?

   YES△Go to step 8.

   NO△Go to step 14.

8. Turn the ignition switch to LOCK (0).
9. Disconnect the EVAP canister purge valve 2P connector.
10. Check for continuity between EVAP canister purge valve 2P connector terminal No. 2 and body ground.

EVAP CANISTER PURGE VALVE 2P CONNECTOR

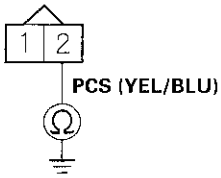

Wire side of female terminals

Is there continuity?

YES△Go to step 11.

NO△Go to step 23.

11. Jump the SCS line with the HDS.

12. Disconnect PCM connector B (44P).

13. Check for continuity between EVAP canister purge valve 2P connector terminal No. 2 and body ground.

EVAP CANISTER PURGE VALVE 2P CONNECTOR

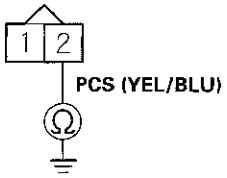

Wire side of female terminals

Is there continuity?

YES△Repair short in the wire between the EVAP canister purge valve and the PCM (B3), then go to step 24.

NO△Go to step 30.

14. Turn the ignition switch to LOCK (0).

15. Disconnect the EVAP canister purge valve 2P connector.

16. Turn the ignition switch to ON (II).

17. Measure the voltage between EVAP canister purge valve 2P connector terminal No. 1 and body ground.

EVAP CANISTER PURGE VALVE 2P CONNECTOR

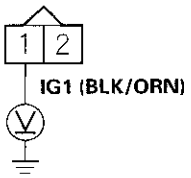

Wire side of female terminals

Is there battery voltage?

YES△Go to step 18.

NO△Repair open in the wire between the EVAP canister purge valve and the No. 3 ALTERNATOR (10 A) fuse in the under-dash fuse/relay box, then go to step 24.

18. Turn the ignition switch to LOCK (0).

19. Jump the SCS line with the HDS.

20. Disconnect PCM connector B (44P).

(cont'd)

DTC Troubleshooting (cont'd)

21. Check for continuity between PCM connector terminal B3 and EVAP canister purge valve 2P connector terminal No. 2.

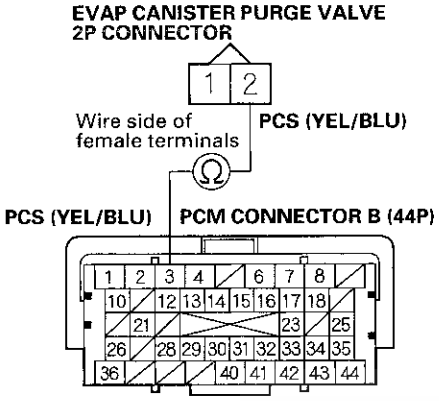

Terminal side of female terminals

Is there continuity?

YES△Go to step 22.

NO△Repair open in the wire between the EVAP canister purge valve and the PCM (B3), then go to step 24.

22. At the purge valve side, measure the resistance between EVAP canister purge valve 2P connector terminals No. 1 and No. 2.

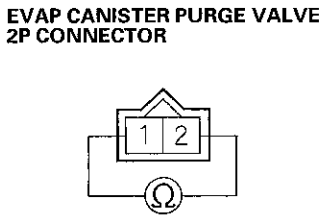

Terminal side of male terminals

Is there about 25 Ω at room temperature?

YES△Go to step 30.

NO△Go to step 23.

23. Replace the EVAP canister purge valve (see page 11-426).

24. Reconnect all connectors.

25. Turn the ignition switch to ON (II).

26. Reset the PCM with the HDS.

27. Do the PCM idle learn procedure (see page 11-333).

28. Check for Temporary DTCs or DTCs with the HDS.

Is DTC P0443 indicated?

YES△Check for poor connections or loose terminals at the EVAP canister purge valve and the PCM, then go to step 1.

NO△Go to step 29.

29. Monitor the OBD STATUS for DTC P0443 in the DTCs MENU with the HDS.

Does the screen indicate PASSED?

YES△Troubleshooting is complete. If any other Temporary DTCs or DTCs were indicated in step 28, go to the indicated DTC's troubleshooting.■

NO△If the screen indicates FAILED, check for poor connections or loose terminals at the EVAP canister purge valve and the PCM, then go to step 1. If the screen indicates EXECUTING or OUT OF CONDITION, keep idling until a result comes on.

30. Reconnect all connectors.

31. Update the PCM if it does not have the latest software (see page 11-236), or substitute a known-good PCM (see page 11-7).

32. Start the engine, and let it idle.

33. Check for Temporary DTCs or DTCs with the HDS.

    Is DTC P0443 indicated?

    YES△Check for poor connections or loose terminals at the EVAP canister purge valve and the PCM. If the PCM was updated, substitute a known-good PCM (see page 11-7), then go to step 32. If the PCM was substituted, go to step 1.

    NO△Go to step 34.

34. Monitor the OBD STATUS for DTC P0443 in the DTCs MENU with the HDS.

    Does the screen indicate PASSED?

    YES△If the PCM was updated, troubleshooting is complete. If the PCM was substituted, replace the original PCM (see page 11-238). If any other Temporary DTCs or DTCs were indicated in step 33, go to the indicated DTC's troubleshooting.■

    NO△If the screen indicates FAILED, check for poor connections or loose terminals at the EVAP canister purge valve and the PCM. If the PCM was updated, substitute a known-good PCM (see page 11-7), then go to step 32. If the PCM was substituted, go to step 1. If the screen indicates EXECUTING or OUT OF CONDITION, keep idling until a result comes on.

DTC P0451: FTP Sensor Circuit Range/ Performance Problem

NOTE:
- Before you troubleshoot, record all freeze data and any on-board snapshot, and review the general troubleshooting information (see page 11-3).
- If DTC P2422 is stored at the same time as DTC P0451, troubleshoot DTC P2422 first, then recheck for DTC P0451.

1. Turn the ignition switch to ON (II).

2. Clear the DTC with the HDS.

3. Start the engine, and let it idle for 1 minute.

4. Monitor the OBD STATUS for DTC P0451 in the DTCs MENU with the HDS.

   Does the screen indicate FAILED?

   YES△Go to step 5.

   NO△If the screen indicates PASSED, intermittent failure, the system is OK at this time. Check for poor connections or loose terminals at the FTP sensor and the PCM. If the screen indicates NOT COMPLETED, keep idling until a result comes on.

5. Turn the ignition switch to LOCK (0).

6. Replace the FTP sensor (see page 11-425).

7. Turn the ignition switch to ON (II).

8. Reset the PCM with the HDS.

9. Do the PCM idle learn procedure (see page 11-333).

10. Start the engine, and let it idle for 1 minute.

11. Check for Temporary DTCs or DTCs with the HDS.

    Is DTC P0451 indicated?

    YES△Check for poor connections or loose terminals at the FTP sensor and the PCM, then go to step 1.

    NO△Go to step 12.

(cont'd)

DTC Troubleshooting (cont'd)

12. Monitor the OBD STATUS for DTC P0451 in the DTCs MENU with the HDS.

    Does the screen indicate PASSED?

    YES△Troubleshooting is complete. If any other Temporary DTCs or DTCs were indicated in step 11, go to the indicated DTC's troubleshooting.■

    NO△If the screen indicates FAILED, check for poor connections or loose terminals at the FTP sensor and the PCM, then go to step 1. If the screen indicates NOT COMPLETED, keep idling until a result comes on.

DTC P0452: FTP Sensor Circuit Low Voltage

NOTE: Before you troubleshoot, record all freeze data and any on-board snapshot, and review the general troubleshooting information (see page 11-3).

1. Turn the ignition switch to ON (II).
2. Clear the DTC with the HDS.
3. Turn the ignition switch to LOCK (0).
4. Remove the fuel fill cap.
5. Turn the ignition switch to ON (II).
6. Check the FTP SENSOR in the DATA LIST with the HDS.

   Is about −7.3 kPa (−2.16 in.Hg, −55 mmHg), or 0.3 V or less indicated?

   YES△Go to step 10.

   NO△Go to step 7.
7. Install the fuel fill cap.
8. Start the engine, and let it idle.
9. Monitor the OBD STATUS for DTC P0452 in the DTCs MENU with the HDS.

   Does the screen indicate FAILED?

   YES△Go to step 10.

   NO△If the screen indicates PASSED, intermittent failure, the system is OK at this time. Check for poor connections or loose terminals at the FTP sensor and the PCM. If the screen indicates NOT COMPLETED, go to step 4 and recheck.

10. Turn the ignition switch to LOCK (0).

11. Disconnect the FTP sensor 3P connector.

12. Turn the ignition switch to ON (II).

13. Check the FTP SENSOR in the DATA LIST with the HDS.

    Is about −7.3 kPa (−2.16 in.Hg, −55 mmHg) or 4.90 V indicated?

    YES△Go to step 14.

    NO△Go to step 24.

14. Measure the voltage between FTP sensor 3P connector terminal No. 1 and body ground.

FTP SENSOR 3P CONNECTOR

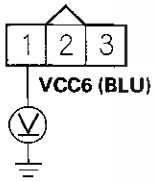

Wire side of female terminals

Is there about 5 V?

YES△Go to step 20.

NO△Go to step 15.

15. Turn the ignition switch to LOCK (0).

16. Jump the SCS line with the HDS.

17. Disconnect PCM connector A (44P).

18. Connect FTP sensor 3P connector terminal No. 1 to body ground with a jumper wire.

FTP SENSOR 3P CONNECTOR

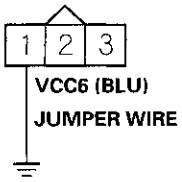

Wire side of female terminals

19. Check for continuity between PCM connector terminal A19 and body ground.

PCM CONNECTOR A (44P)

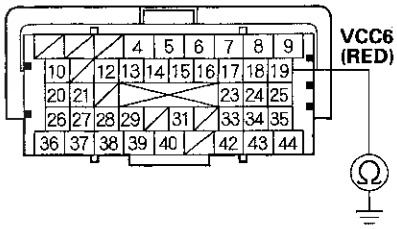

Terminal side of female terminals

Is there continuity?

YES△Go to step 32.

NO△Repair open in the wire between the PCM (A19) and the FTP sensor, then go to step 26.

(cont'd)

DTC Troubleshooting (cont'd)

20. Turn the ignition switch to LOCK (0).

21. Jump the SCS line with the HDS.

22. Disconnect PCM connector A (44P).

23. Check for continuity between FTP sensor 3P connector terminal No. 2 and body ground.

FTP SENSOR 3P CONNECTOR

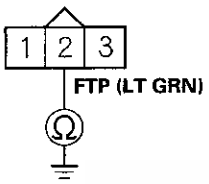

Wire side of female terminals

Is there continuity?

YES△Repair short in the wire between the PCM (A26) and the FTP sensor, then go to step 26.

NO△Go to step 32.

24. Turn the ignition switch to LOCK (0).

25. Replace the FTP sensor (see page 11-425).

26. Reconnect all connectors.

27. Turn the ignition switch to ON (II).

28. Reset the PCM with the HDS.

29. Do the PCM idle learn procedure (see page 11-333).

30. Check for Temporary DTCs or DTCs with the HDS.

Is DTC P0452 indicated?

YES△Check for poor connections or loose terminals at the FTP sensor and the PCM, then go to step 1.

NO△Go to step 31.

31. Monitor the OBD STATUS for DTC P0452 in the DTCs MENU with the HDS.

Does the screen indicate PASSED?

YES△Troubleshooting is complete. If any other Temporary DTCs or DTCs were indicated in step 30, go to the indicated DTC's troubleshooting.■

NO△If the screen indicates FAILED, check for poor connections or loose terminals at the FTP sensor and the PCM, then go to step 1. If the screen indicates NOT COMPLETED, keep idling until a result comes on.

32. Reconnect all connectors.

33. Update the PCM if it does not have the latest software (see page 11-236), or substitute a known-good PCM (see page 11-7).

34. Start the engine, and let it idle.

35. Check for Temporary DTCs or DTCs with the HDS.

    Is DTC P0452 indicated?

    YES△Check for poor connections or loose terminals at the FTP sensor and the PCM. If the PCM was updated, substitute a known-good PCM (see page 11-7), then go to step 34. If the PCM was substituted, go to step 1.

    NO△Go to step 36.

36. Monitor the OBD STATUS for DTC P0452 in the DTCs MENU with the HDS.

    Does the screen indicate PASSED?

    YES△If the PCM was updated, troubleshooting is complete. If the PCM was substituted, replace the original PCM (see page 11-238). If any other Temporary DTCs or DTCs were indicated in step 35, go to the indicated DTC's troubleshooting.■

    NO△If the screen indicates FAILED, check for poor connections or loose terminals at the FTP sensor and the PCM. If the PCM was updated, substitute a known-good PCM (see page 11-7), then go to step 34. If the PCM was substituted, go to step 1. If the screen indicates NOT COMPLETED, keep idling until a result comes on.

DTC P0453: FTP Sensor Circuit High Voltage

NOTE: Before you troubleshoot, record all freeze data and any on-board snapshot, and review the general troubleshooting information (see page 11-3).

1. Turn the ignition switch to ON (II).

2. Clear the DTC with the HDS.

3. Turn the ignition switch to LOCK (0).

4. Remove the fuel fill cap.

5. Turn the ignition switch to ON (II).

6. Check the FTP SENSOR in the DATA LIST with the HDS.

   Is about 7.3 kPa (2.16 in.Hg, 55 mmHg), or 4.7 V or more indicated?

   YES△Go to step 10.

   NO△Go to step 7.

7. Install the fuel fill cap.

8. Start the engine. Hold the engine speed at 3,000 rpm without load (in P or N) until the radiator fan comes on, then let it idle.

9. Monitor the OBD STATUS for DTC P0453 in the DTCs MENU with the HDS.

   Does the screen indicate FAILED?

   YES△Go to step 10.

   NO△If the screen indicates PASSED, intermittent failure, the system is OK at this time. Check for poor connections or loose terminals at the FTP sensor and the PCM. If the screen indicates NOT COMPLETED, go to step 6 and recheck.

10. Turn the ignition switch to LOCK (0).

11. Disconnect the FTP sensor 3P connector.

(cont'd)

DTC Troubleshooting (cont'd)

12. Connect FTP sensor 3P connector terminals No. 2 and No. 3 with a jumper wire.

FTP SENSOR 3P CONNECTOR

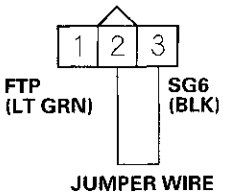

Wire side of female terminals

13. Turn the ignition switch to ON (II).

14. Check the FTP SENSOR in the DATA LIST with the HDS.

    Is about 7.3 kPa (2.16 in.Hg, 55 mmHg), or 4.7 V or more indicated?

    YES△Go to step 15.

    NO△Go to step 26.

15. Measure the voltage between FTP sensor 3P connector terminals No. 1 and No. 3.

FTP SENSOR 3P CONNECTOR

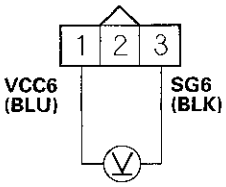

Wire side of female terminals

Is there about 5 V?

YES△Go to step 21.

NO△Go to step 16.

16. Turn the ignition switch to LOCK (0).

17. Jump the SCS line with the HDS.

18. Disconnect PCM connector A (44P).

19. Connect FTP sensor 3P connector terminal No. 3 to body ground with a jumper wire.

FTP SENSOR 3P CONNECTOR

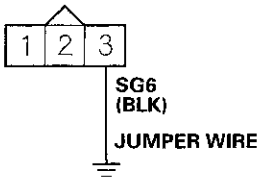

Wire side of female terminals

20. Check for continuity between PCM connector terminal A9 and body ground.

PCM CONNECTOR A (44P)

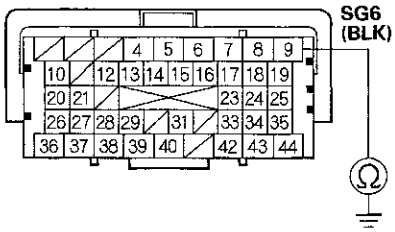

Terminal side of female terminals

Is there continuity?

YES△Go to step 34.

NO△Repair open in the wire between the PCM (A9) and the FTP sensor, then go to step 28.

21. Turn the ignition switch to LOCK (0).

22. Jump the SCS line with the HDS.

23. Disconnect PCM connector A (44P).

24. Connect FTP sensor 3P connector terminal No. 2 to body ground with a jumper wire.

FTP SENSOR 3P CONNECTOR

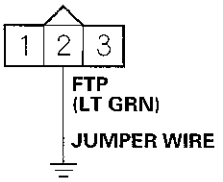

Wire side of female terminals

25. Check for continuity between PCM connector terminal A26 and body ground.

PCM CONNECTOR A (44P)

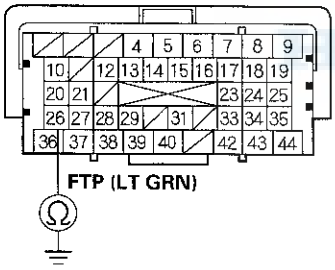

Terminal side of female terminals

Is there continuity?

YES△Go to step 34.

NO△Repair open in the wire between the PCM (A26) and the FTP sensor, then go to step 28.

26. Turn the ignition switch to LOCK (0).

27. Replace the FTP sensor (see page 11-425).

28. Reconnect all connectors.

29. Turn the ignition switch to ON (II).

30. Reset the PCM with the HDS.

31. Do the PCM idle learn procedure (see page 11-333).

32. Check for Temporary DTCs or DTCs with the HDS.

Is DTC P0453 indicated?

YES△Check for poor connections or loose terminals at the FTP sensor and the PCM, then go to step 1.

NO△Go to step 33.

33. Monitor the OBD STATUS for DTC P0453 in the DTCs MENU with the HDS.

Does the screen indicate PASSED?

YES△Troubleshooting is complete. If any other Temporary DTCs or DTCs were indicated in step 32, go to the indicated DTC's troubleshooting.■

NO△If the screen indicates FAILED, check for poor connections or loose terminals at the FTP sensor and the PCM, then go to step 1. If the screen indicates NOT COMPLETED, keep idling until a result comes on.

(cont'd)

DTC Troubleshooting (cont'd)

34. Reconnect all connectors.

35. Update the PCM if it does not have the latest software (see page 11-236), or substitute a known-good PCM (see page 11-7).

36. Start the engine, and let it idle.

37. Check for Temporary DTCs or DTCs with the HDS.

    Is DTC P0453 indicated?

    YES△Check for poor connections or loose terminals at the FTP sensor and the PCM. If the PCM was updated, substitute a known-good PCM (see page 11-7), then go to step 36. If the PCM was substituted, go to step 1.

    NO△Go to step 38.

38. Monitor the OBD STATUS for DTC P0453 in the DTCs MENU with the HDS.

    Does the screen indicate PASSED?

    YES△If the PCM was updated, troubleshooting is complete. If the PCM was substituted, replace the original PCM (see page 11-238). If any other Temporary DTCs or DTCs were indicated in step 37, go to the indicated DTC's troubleshooting.■

    NO△If the screen indicates FAILED, check for poor connections or loose terminals at the FTP sensor and the PCM. If the PCM was updated, substitute a known-good PCM (see page 11-7), then go to step 36. If the PCM was substituted, go to step 1. If the screen indicates NOT COMPLETED, keep idling until a result comes on.

DTC P0455: EVAP System Very Large Leak Detected

DTC P0456: EVAP System Very Small Leak Detected

NOTICE

The fuel system is designed to allow specified maximum vacuum and pressure conditions. Do not deviate from the vacuum and pressure tests as indicated in these procedures. Excessive pressure/vacuum would damage the EVAP components or cause eventual fuel tank failure.

Special Tools Required

Vacuum Pump/Gauge, 0—30 in.Hg, Snap-on YA4000A or equivalent, commercially available

NOTE:

- Before you troubleshoot, record all freeze data and any on-board snapshot, and review the general troubleshooting information (see page 11-3).
- Fresh fuel has a higher volatility that will create greater pressure/vacuum. The optimum condition for testing is less than a full tank of fresh fuel. If possible, to assist in leak detection, add 1 gallon of fresh fuel to the tank (as long as it will not fill the tank), just before starting these procedures.

1. Check the fuel fill cap (the cap must say TIGHTEN TO CLICK). It should turn 1/4 turn after it's tight, then it clicks ?

   Is the correct fuel fill cap installed and properly tightened?

   YES△Go to step 2.

   NO△Replace or tighten the cap, then go to step 29.

2. Check the fuel fill cap seal (A) and the fuel fill pipe mating surface (B). Verify that the fuel fill cap tether cord (C) is not caught under the cap.

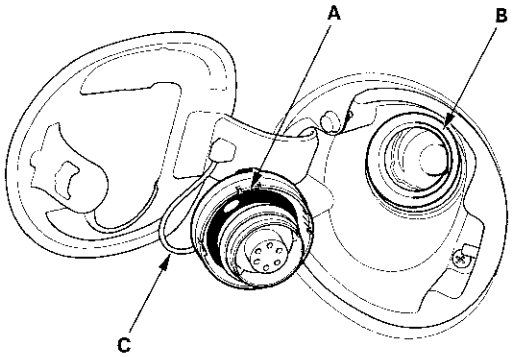

Is the fuel fill cap seal missing or damaged, is the fuel fill pipe damaged, or is the tether cord caught under the cap?

YES△Replace the fuel fill cap or the fuel fill pipe, then go to step 29.

NO△Go to step 3.

3. Turn the ignition switch to ON (II).

4. Clear the DTC with the HDS.

5. Do the EVAP FUNCTION TEST in the INSPECTION MENU with the HDS.

Is the result OK?

YES△Intermittent failure, the system is OK at this time. Check for poor connections or loose terminals at the FTP sensor, the EVAP canister purge valve, or the EVAP canister vent shut valve, and the PCM.■

NO△Go to step 6.

6. Turn the ignition switch to LOCK (0).

7. Check for a poor connection or damage at the fuel tank vapor recirculation tube.

Is the tube OK?

YES△Go to step 8.

NO△
- Replace the fuel tank vapor recirculation tube, then go to step 29.
- If necessary, replace the fuel tank (see page 11-365), then go to step 29.

8. Disconnect the fuel tank vapor control valve hose (A) and fresh air hose (B) from the EVAP canister (C), and plug the EVAP canister port (D).

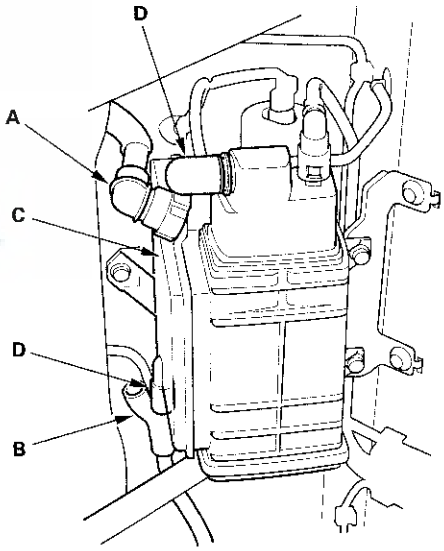

(cont'd)

DTC Troubleshooting (cont'd)

9. Disconnect the vacuum hose (engine side) (A) from the EVAP canister purge valve (B) in the engine compartment, and connect a vacuum pump/gauge, 0—30 in.Hg, to the vacuum hose as shown.

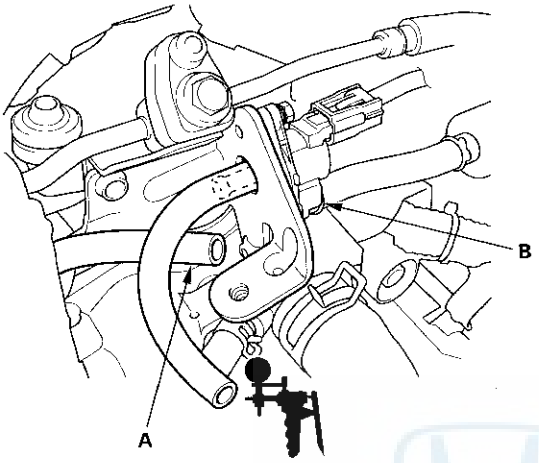

10. Turn the ignition switch to ON (II).

11. Select EVAP PCS ON in the INSPECTION MENU with the HDS.

12. Apply vacuum to the hose until the FTP reads 1.90 V (—0.59 in.Hg, —15.1 mmHg).

    NOTE: Be careful not to exceed the vacuum. If you do, the FTP sensor can be damaged.

13. Select EVAP PCS OFF in the INSPECTION MENU with the HDS, and disconnect the vacuum pump/gauge.

14. Monitor the FTP SENSOR in the DATA LIST for 1 minute with the HDS.

    Does the voltage increase more than 0.2 V (0.1 in. Hg, 2.5 mmHg)?

    YES△Go to step 15.

    NO△Go to step 20.

15. Reconnect the vacuum hose (engine side) to the EVAP canister purge valve.

16. Disconnect the vacuum hose (EVAP canister side) (A) from the EVAP canister purge valve (B) in the engine compartment, and connect a vacuum pump/gauge, 0—30 in.Hg, to the vacuum hose as shown.

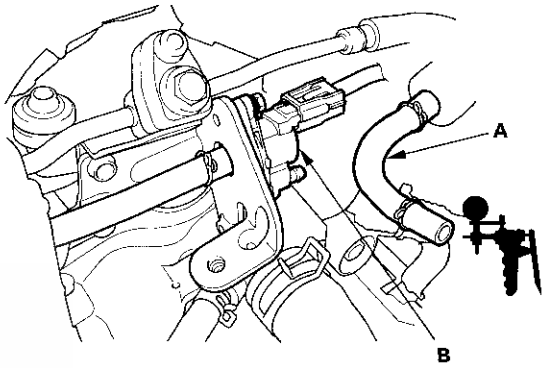

17. Apply vacuum to the hose until the FTP reads 1.90 V (—0.59 in.Hg, —15.1 mmHg).

    NOTE: Be careful not to exceed the vacuum. If you do, the FTP sensor can be damaged.

18. Monitor the FTP SENSOR in the DATA LIST for 1 minute with the HDS.

    Does the voltage increase more than 0.2 V (0.1 in.Hg, 2.5 mmHg)?

    YES△Go to step 19.

    NO△Replace the EVAP canister purge valve (see page 11-426), then go to step 15.

19. Check for a loose or damaged EVAP canister purge line between the EVAP canister and the EVAP canister purge valve, or a leaking EVAP canister.

    Is the line OK?

    YES△Replace these parts, then go to step 28.
    - FTP sensor O-ring
    - EVAP canister vent shut valve case and O-ring
    - EVAP canister

    NO△Reconnect or repair the EVAP canister purge line, then go to step 28.

20. Reconnect the fresh air hose (A) from the EVAP canister (B).

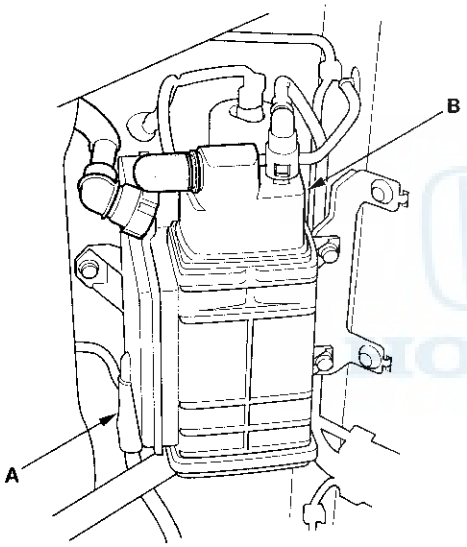

21. Reconnect the vacuum hose (engine side) to the EVAP canister purge valve.

22. Disconnect the vacuum hose (EVAP canister side) (A) from the EVAP canister purge valve (B) in the engine compartment, and connect a vacuum pump/gauge, 0—30 in.Hg, to the vacuum hose as shown.

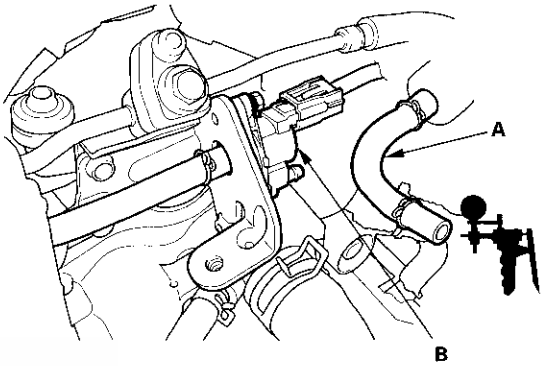

23. Select EVAP CVS ON in the INSPECTION MENU with the HDS.

24. Apply vacuum to the hose until the FTP reads 1.90 V (−0.59 in.Hg, −15.1 mmHg).

    NOTE: Be careful not to exceed the vacuum. If you do, the FTP sensor can be damaged.

25. Monitor the FTP SENSOR in the DATA LIST for 1 minute with the HDS.

    Does the voltage increase more than 0.2 V (0.1 in.Hg, 2.5 mmHg)?

    YES△Replace the EVAP canister vent shut valve (see page 11-425), then go to step 28.

    NO△Go to step 26.

(cont'd)

DTC Troubleshooting (cont'd)

26. Select EVAP CVS OFF in the INSPECTION MENU with the HDS.

27. Check these parts for looseness or damage.

    - Fuel fill pipe
    - Fuel vapor return pipe

    Are the parts OK?

    YES△Check the fuel tank unit base gasket (see page 11-361), and check the fuel tank, then go to step 28.

    NO△Repair or replace the damaged parts, then go to step 28.

28. Reconnect all hoses and connectors.

29. Turn the ignition switch to ON (II).

30. Reset the PCM with the HDS.

31. Do the PCM idle learn procedure (see page 11-333).

32. Do the EVAP FUNCTION TEST in the INSPECTION MENU with the HDS.

    Is the result OK?

    YES△Troubleshooting is complete.■

    NO△Check for poor connections or loose terminals at the FTP sensor, the EVAP canister purge valve, the EVAP canister vent shut valve, and the PCM, then go to step 1.

DTC P0457: EVAP System Leak Detected/Fuel Fill Cap Loose or Missing

NOTE: Before you troubleshoot, record all freeze data and any on-board snapshot, and review the general troubleshooting information (see page 11-3).

1. Check the fuel fill cap (the cap must say TIGHTEN TO CLICK). It should turn 1/4 turn after it's tight, then it clicks.

   Is the correct fuel fill cap installed and properly tightened?

   YES△Go to step 2.

   NO△Replace or tighten the cap, then go to step 19.

2. Check the fuel fill cap seal (A) and the fuel fill pipe mating surface (B). Verify that the fuel fill cap tether cord (C) is not caught under the cap.

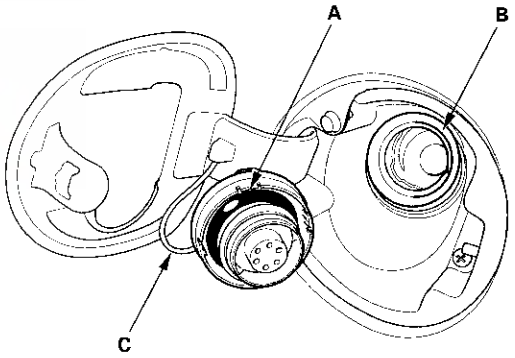

   Is the fuel fill cap seal missing or damaged, is the fuel fill pipe damaged, or is the tether cord caught under the cap?

   YES△Replace the fuel fill cap or the fuel fill pipe, then go to step 19.

   NO△Go to step 3.

3. Turn the ignition switch to ON (II).

4. Clear the DTC with the HDS.

5. Do the EVAP FUNCTION TEST in the INSPECTION MENU with the HDS.

   Is the result OK?

   YES△Intermittent failure, the system is OK at this time. Check for poor connections or loose terminals at the FTP sensor, or the EVAP canister vent shut valve, and the PCM. ■

   NO△Go to step 6.

6. Turn the ignition switch to LOCK (0).

7. Remove the EVAP canister vent shut valve from the EVAP canister (see page 11-425).

8. Connect the 2P connector to the EVAP canister vent shut valve.

9. Turn the ignition switch to ON (II).

10. Select EVAP CVS ON in the INSPECTION MENU with the HDS.

11. Check the EVAP canister vent shut valve (A) operation.

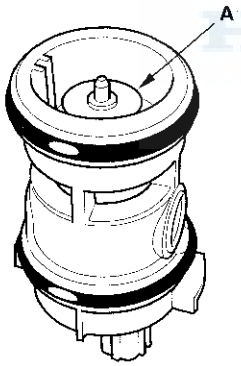

   Does the valve operate?

   YES△Check the routing of the EVAP canister vent tube, then go to step 18.

   NO△Go to step 12.

12. Turn the ignition switch to LOCK (0).

13. Replace the EVAP canister vent shut valve (see page 11-425).

14. Turn the ignition switch to ON (II).

15. Reset the PCM with the HDS.

16. Do the PCM idle learn procedure (see page 11-333).

17. Do the EVAP FUNCTION TEST in the INSPECTION MENU with the HDS.

    Is the result OK?

    YES△Troubleshooting is complete. ■

    NO△Check for poor connections or loose terminals at the FTP sensor, the EVAP canister vent shut valve, and the PCM, then go to step 1.

18. Reinstall the EVAP canister vent shut valve.

19. Turn the ignition switch to ON (II).

20. Reset the PCM with the HDS.

21. Do the PCM idle learn procedure (see page 11-333).

22. Do the EVAP FUNCTION TEST in the INSPECTION MENU with the HDS.

    Is the result OK?

    YES△Troubleshooting is complete. ■

    NO△Check for poor connections or loose terminals at the FTP sensor, the EVAP canister vent shut valve, and the PCM, then go to step 1.

DTC Troubleshooting (cont'd)

DTC P0496: EVAP System High Purge Flow Detected

NOTE: Before you troubleshoot, record all freeze data and any on-board snapshot, and review the general troubleshooting information (see page 11-3).

1. Turn the ignition switch to ON (II).
2. Clear the DTC with the HDS.
3. Do the EVAP FUNCTION TEST in the INSPECTION MENU with the HDS.

   Is the result OK?

   YES△Intermittent failure, the system is OK at this time. Check for poor connections or loose terminals at the FTP sensor, the EVAP canister purge valve, the EVAP canister vent shut valve, and the PCM. ■

   NO△Go to step 4.
4. Turn the ignition switch to LOCK(0).
5. Replace the EVAP canister purge valve (see page 11-426).
6. Turn the ignition switch to ON (II).
7. Reset the PCM with the HDS.
8. Do the PCM idle learn procedure (see page 11-333).
9. Do the EVAP FUNCTION TEST in the INSPECTION MENU with the HDS.

   Is the result OK?

   YES△Troubleshooting is complete. ■

   NO△Check for poor connections or loose terminals at the FTP sensor, the EVAP canister purge valve, the EVAP canister vent shut valve, and the PCM, then go to step 1.

DTC P0497: EVAP System Low Purge Flow Detected

Special Tools Required
- Vacuum/pressure gauge, 0—4 in.Hg, 07JAZ-001000B
- Vacuum pump/gauge, 0—30 in.Hg, Snap-on YA4000A or equivalent, commercially available

NOTE: Before you troubleshoot, record all freeze data and any on-board snapshot, and review the general troubleshooting information (see page 11-3).

1. Check the fuel fill cap installation (The cap label must say TIGHTEN TO CLICK. The cap should tighten 1/4 turn after it is tight.).

   Is the fuel fill cap installed and properly tightened?

   YES△Go to step 2.

   NO△Properly install the fuel fill cap, then go to step 23.
2. Turn the ignition switch to ON (II).
3. Clear the DTC with the HDS.
4. Do the EVAP FUNCTION TEST in the INSPECTION MENU with the HDS.

   Is the result OK?

   YES△Intermittent failure, the system is OK at this time. Check for poor connections or loose terminals at the FTP sensor, the EVAP canister purge valve, or the EVAP canister vent shut valve, and the PCM. ■

   NO△Go to step 5.
5. Check for a loose or damaged EVAP canister purge line between the intake manifold and the EVAP canister purge valve.

   Is the line OK?

   YES△Go to step 6.

   NO△Reconnect or repair the EVAP canister purge line, then go to step 23.

6. Disconnect the vacuum hose (A) from the EVAP canister purge valve (B) in the engine compartment, and connect a T-fitting (C) from the vacuum gauge and the vacuum pump/gauge, 0—30 in.Hg, to the vacuum hose as shown.

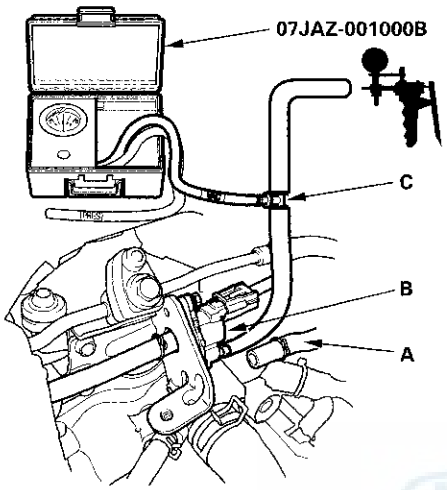

7. Select EVAP PCS ON in the INSPECTION MENU with the HDS.

8. Slowly apply about 2 kPa (0.6 in.Hg, 15 mmHg) of vacuum to the hose.

   Does it hold vacuum?

   YES△Replace the EVAP canister purge valve, then go to step 22.

   NO△Go to step 9.

9. Reconnect the vacuum hose to the EVAP canister purge valve.

10. Disconnect the vacuum hose (A) from the purge line (at the EVAP canister side), and connect a T-fitting (B) from the vacuum gauge and the vacuum pump/gauge, 0—30 in.Hg, to the hose as shown.

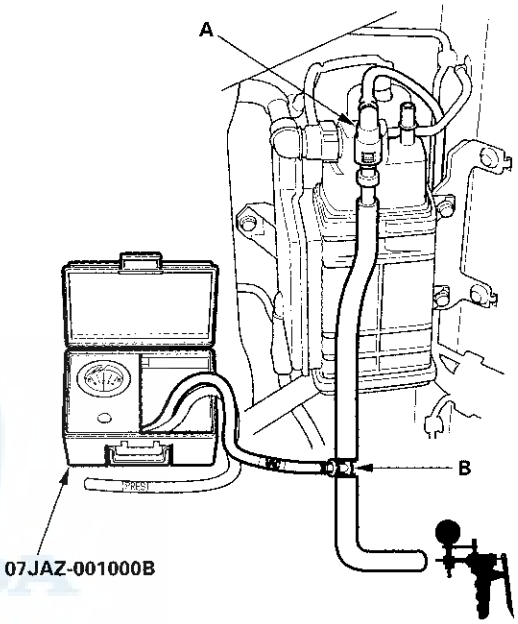

11. Select EVAP PCS ON in the INSPECTION MENU with the HDS.

12. Slowly apply about 2 kPa (0.6 in.Hg, 15 mmHg) of vacuum to the hose.

    Does it hold vacuum?

    YES△Check for a restricted EVAP canister purge line between the EVAP canister purge valve and the EVAP canister, then go to step 22.

    NO△Go to step 13.

(cont'd)

DTC Troubleshooting (cont'd)

13. Remove the FTP sensor with its connector connected (see page 11-425).

14. Connect a T-fitting (A) from the vacuum pump/gauge, 0—30 in.Hg, and the vacuum pump to the FTP sensor (B) as shown.

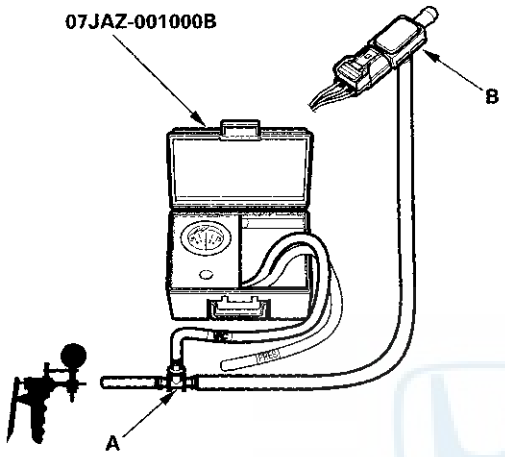

15. Check and record the FTP SENSOR reading in the DATA LIST with the HDS.

16. Slowly apply about 1.3 kPa (0.4 in.Hg, 10 mmHg) of vacuum to the hose.

17. Check the FTP SENSOR in the DATA LIST with the HDS.

    Is the difference more than 1.1 kPa (0.31 in.Hg, 8 mmHg) before and after applying vacuum?

    YES△Go to step 18.

    NO△Replace the FTP sensor (see page 11-425), then go to step 22.

18. Reconnect the vacuum hoses to the EVAP canister purge line (EVAP canister side), and reinstall the FTP sensor.

19. Disconnect the vacuum hose (purge line) (A) from the EVAP canister purge valve (B), and connect a T-fitting (C) from the vacuum gauge and the vacuum pump/gauge, 0—30 in.Hg, to the hose as shown.

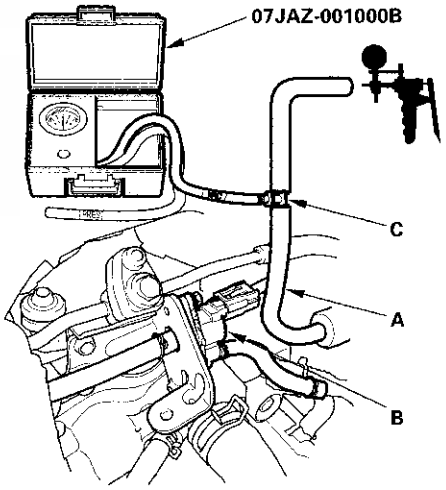

20. Select EVAP CVS ON in the INSPECTION MENU with the HDS.

21. Slowly apply about 2 kPa (0.6 in.Hg, 15 mmHg) of vacuum to the hose.

    Does the hose hold vacuum?

    YES△Check for blockage at the EVAP canister port, then go to step 22.

    NO△Replace the EVAP canister vent shut valve (see page 11-425), then go to step 22.

22. Reconnect all hoses.

23. Turn the ignition switch to ON (II).

24. Reset the PCM with the HDS.

25. Do the PCM idle learn procedure (see page 11-333).

26. Do the EVAP FUNCTION TEST in the INSPECTION MENU with the HDS.

    Is the result OK?

    YES△Troubleshooting is complete.■

    NO△Check for poor connections or loose terminals at the FTP sensor, the EVAP canister purge valve, the EVAP canister vent shut valve, and the PCM, then go to step 1.

DTC P0498: EVAP Canister Vent Shut Valve Circuit Low Voltage

NOTE: Before you troubleshoot, record all freeze data and any on-board snapshot, and review the general troubleshooting information (see page 11-3).

1. Turn the ignition switch to ON (II).

2. Clear the DTC with the HDS.

3. Check for Temporary DTCs or DTCs with the HDS.

   Is DTC P0498 indicated?

   YES△Go to step 6.

   NO△Go to step 4.

4. Select EVAP CVS ON in the INSPECTION MENU with the HDS.

5. Check for Temporary DTCs or DTCs with the HDS.

   Is DTC P0498 indicated?

   YES△Go to step 6.

   NO△Intermittent failure, the system is OK at this time. Check for poor connections or loose terminals at the EVAP canister vent shut valve and the PCM.■

6. Turn the ignition switch to LOCK (0).

7. Disconnect the EVAP canister vent shut valve 2P connector.

8. Turn the ignition switch to ON (II).

(cont'd)

DTC Troubleshooting (cont'd)

9. Measure the voltage between EVAP canister vent shut valve 2P connector terminal No. 2 and body ground.

EVAP CANISTER VENT SHUT VALVE 2P CONNECTOR

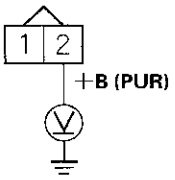

Wire side of female terminals

Is there battery voltage?

YES△Go to step 10.

NO△Repair open in the wire between the EVAP canister vent shut valve and the PGM-FI subrelay, then go to step 18.

10. Turn the ignition switch to LOCK (0).

11. At valve side, measure the resistance between EVAP canister vent shut valve 2P connector terminals No. 1 and No. 2.

EVAP CANISTER VENT SHUT VALVE 2P CONNECTOR

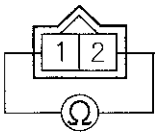

Terminal side of male terminals

Is there about 25 – 30 Ω at room temperature?

YES△Go to step 12.

NO△Go to step 17.

12. Jump the SCS line with the HDS.

13. Disconnect PCM connector A (44P).

14. Check for continuity between PCM connector terminal A10 and body ground.

PCM CONNECTOR A (44P)

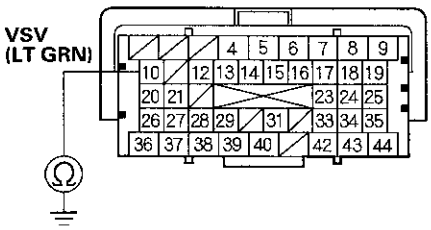

Terminal side of female terminals

Is there continuity?

YES△Repair short in the wire between the EVAP canister vent shut valve and the PCM (A10), then go to step 18.

NO△Go to step 15.

15. Connect EVAP canister vent shut valve 2P connector terminal No. 1 to body ground with a jumper wire.

EVAP CANISTER VENT SHUT VALVE 2P CONNECTOR

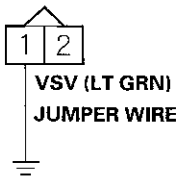

Wire side of female terminals

16. Check for continuity between PCM connector terminal A10 and body ground.

PCM CONNECTOR A (44P)

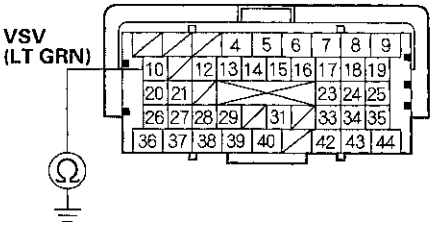

Terminal side of female terminals

Is there continuity?

YES△Go to step 24.

NO△Repair open in the wire between the EVAP canister vent shut valve and the PCM (A10), then go to step 18.

17. Replace the EVAP canister vent shut valve (see page 11-425).

18. Reconnect all connectors.

19. Turn the ignition switch to ON (II).

20. Reset the PCM with the HDS.

21. Do the PCM idle learn procedure (see page 11-333).

22. Select EVAP CVS ON in the INSPECTION MENU with the HDS.

23. Check for Temporary DTCs or DTCs with the HDS.

Is DTC P0498 indicated?

YES△Check for poor connections or loose terminals at the EVAP canister vent shut valve and the PCM, then go to step 1.

NO△Go to step 24.

24. Monitor the OBD STATUS for DTC P0498 in the DTCs MENU with the HDS.

Does the screen indicate PASSED?

YES△Troubleshooting is complete. If any other Temporary DTCs or DTCs were indicated in step 23, go to the indicated DTC's troubleshooting.■

NO△If the screen indicates FAILED, check for poor connections or loose terminals at the EVAP canister vent shut valve and the PCM, then go to step 1. If the screen indicates NOT COMPLETED, go to step 22.

(cont'd)

DTC Troubleshooting (cont'd)

25. Reconnect all connectors.

26. Update the PCM if it does not have the latest software (see page 11-236), or substitute a known-good PCM (see page 11-7).

27. Select EVAP CVS ON in the INSPECTION MENU with the HDS.

28. Check for Temporary DTCs or DTCs with the HDS.

    Is DTC P0498 indicated?

    YES△Check for poor connections or loose terminals at the EVAP canister vent shut valve and the PCM. If the PCM was updated, substitute a known-good PCM (see page 11-7), then go to step 27. If the PCM was substituted, go to step 1.

    NO△Go to step 29.

29. Monitor the OBD STATUS for DTC P0498 in the DTCs MENU with the HDS.

    Does the screen indicate PASSED?

    YES△If the PCM was updated, troubleshooting is complete. If the PCM was substituted, replace the original PCM (see page 11-238). If any other Temporary DTCs or DTCs were indicated in step 28, go to the indicated DTC's troubleshooting. ■

    NO△If the screen indicates FAILED, check for poor connections or loose terminals at the EVAP canister vent shut valve and the PCM. If the PCM was updated, substitute a known-good PCM (see page 11-7), then go to step 27. If the PCM was substituted, go to step 1. If the screen indicates NOT COMPLETED, go to step 27.

DTC P0499: EVAP Canister Vent Shut Valve Circuit High Voltage

NOTE: Before you troubleshoot, record all freeze data and any on-board snapshot, and review the general troubleshooting information (see page 11-3).

1. Turn the ignition switch to ON (II).

2. Clear the DTC with the HDS.

3. Select EVAP CVS ON in the INSPECTION MENU with the HDS.

4. Check for Temporary DTCs or DTCs with the HDS.

   Is DTC P0499 indicated?

   YES△Go to step 5.

   NO△Intermittent failure, the system is OK at this time. Check for poor connections or loose terminals at the EVAP canister vent shut valve and the PCM. ■

5. Update the PCM if it does not have the latest software (see page 11-236), or substitute a known-good PCM (see page 11-7).

6. Select EVAP CVS ON in the INSPECTION MENU with the HDS.

7. Check for Temporary DTCs or DTCs with the HDS.

   Is DTC P0499 indicated?

   YES△Check for poor connections or loose terminals at the EVAP canister vent shut valve and the PCM. If the PCM was updated, substitute a known-good PCM (see page 11-7), then go to step 6. If the PCM was substituted, go to step 1.

   NO△Go to step 8.

8. Monitor the OBD STATUS for DTC P0499 in the DTCs MENU with the HDS.

   Does the screen indicate PASSED?

   YES△If the PCM was updated, troubleshooting is complete. If the PCM was substituted, replace the original PCM (see page 11-238). If any other Temporary DTCs or DTCs were indicated in step 7, go to the indicated DTC's troubleshooting.■

   NO△If the screen indicates FAILED, check for poor connections or loose terminals at the EVAP canister vent shut valve and the PCM. If the PCM was updated, substitute a known-good PCM (see page 11-7), then go to step 6. If the PCM was substituted, go to step 1. If the screen indicates NOT COMPLETED, go to step 6.

DTC P1454: FTP Sensor Circuit Range/ Performance Problem

DTC P2422: EVAP Canister Vent Shut Valve Stuck Closed Malfunction

NOTE: Before you troubleshoot, record all freeze data and any on-board snapshot, and review the general troubleshooting information (see page 11-3).

1. Turn the ignition switch to ON (II).
2. Clear the DTC with the HDS.
3. Turn the ignition switch to LOCK (0).
4. Remove the fuel fill cap, and wait 1 minute.
5. Check the FTP SENSOR in the DATA LIST with the HDS.

   Is it between − 0.67 and 0.67 kPa (−0.2 and 0.2 in.Hg, −5 and 5 mmHg), or 2.4 and 2.6 V?

   YES△Go to step 6.

   NO△Go to step 17.
6. Install the fuel fill cap.
7. Clear the DTC with the HDS.
8. Start the engine, and let it idle without load (in P on N) until the radiator fan comes on.
9. Monitor the OBD STATUS for DTC P1454 in the DTCs MENU with the HDS.

   Does the screen indicate FAILED?

   YES△Go to step 10.

   NO△If the screen indicates PASSED, intermittent failure, the system is OK at this time. Check for poor connections or loose terminals at the FTP sensor, the EVAP canister vent shut valve, and the PCM. Also check for a blockage in the vent hoses and the drain joint. If the screen indicates NOT COMPLETED, keep idling until a result comes on.

(cont'd)

DTC Troubleshooting (cont'd)

10. Clear the DTC with the HDS.

11. Turn the ignition switch to LOCK (0).

12. Remove the EVAP canister vent shut valve from the EVAP canister (see page 11-425).

13. Connect the 2P connector to the EVAP canister vent shut valve.

14. Turn the ignition switch to ON (II).

15. Select EVAP CVS ON in the INSPECTION MENU with the HDS.

16. Check the EVAP canister vent shut valve (A) operation.

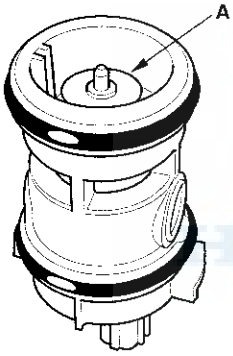

Does the valve operate?

YES△Check for a blockage in the EVAP canister, the EVAP canister filter, vent hoses, and drain joint, then install the EVAP canister vent shut valve, and go to step 23.

NO△Replace the EVAP canister vent shut valve (see page 11-425), then go to step 23.

17. Disconnect the air tube (A) from the FTP sensor (B).

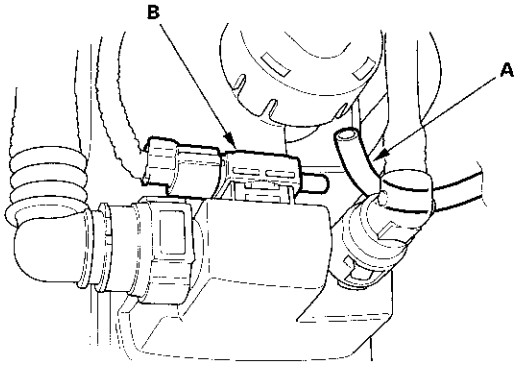

18. Check the FTP SENSOR in the DATA LIST with the HDS.

Is it between −0.67 and 0.67 kPa (−0.2 and 0.2 in.Hg, −5 and 5 mmHg), or 2.4 and 2.6 V?

YES△Check for a blockage in the FTP sensor air tube or vent, then go to step 23.

NO△Go to step 19.

19. Turn the ignition switch to LOCK (0).

20. Remove the FTP sensor (A) from the EVAP canister with its connector connected (see page 11-425).

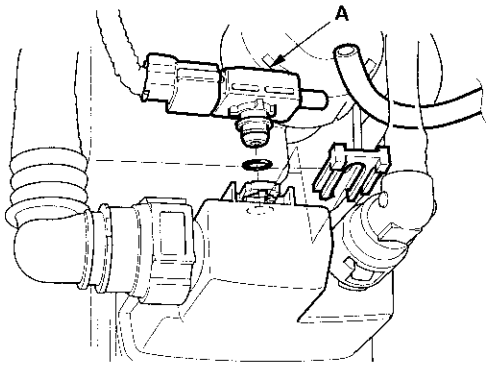

21. Turn the ignition switch to ON (II).

22. Check the FTP SENSOR in the DATA LIST with the HDS.

    Is it between −0.67 kPa and 0.67 kPa (−0.2 and 0.2 in.Hg, −5 and 5 mmHg), or 2.4 and 2.6 V?

    YES—Check for debris or clogging at the EVAP canister and the FTP sensor port, then go to step 23.

    NO—Replace the FTP sensor (see page 11-425), then go to step 23.

23. Turn the ignition switch to ON (II).

24. Reset the PCM with the HDS.

25. Do the PCM idle learn procedure (see page 11-333).

26. Start the engine, and let it idle without load (in P or N) until the radiator fan comes on.

27. Check for Temporary DTCs or DTCs with the HDS.

    Is DTC P1454 and/or P2422 indicated?

    YES—Check for poor connections or loose terminals at the FTP sensor, the EVAP canister vent shut valve, and the PCM, then go to step 1.

    NO—Go to step 28.

28. Monitor the OBD STATUS for DTC P1454 in the DTCs MENU with the HDS.

    Does the screen indicate PASSED?

    YES—Troubleshooting is complete. If any other Temporary DTCs or DTCs were indicated in step 27, go to the indicated DTC's troubleshooting.■

    NO—If the screen indicates FAILED, check for poor connections or loose terminals at the FTP sensor, the EVAP canister vent shut valve, and the PCM, then go to step 1. If the screen indicates NOT COMPLETED, keep idling until a result comes on.

EVAP Canister Replacement

1. Raise the vehicle on a lift.
2. Remove the cover (A).

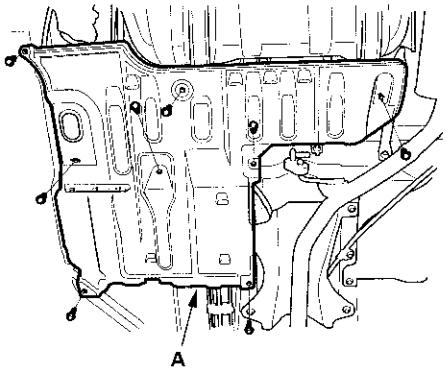

3. Remove the EVAP canister guard pipe (A).

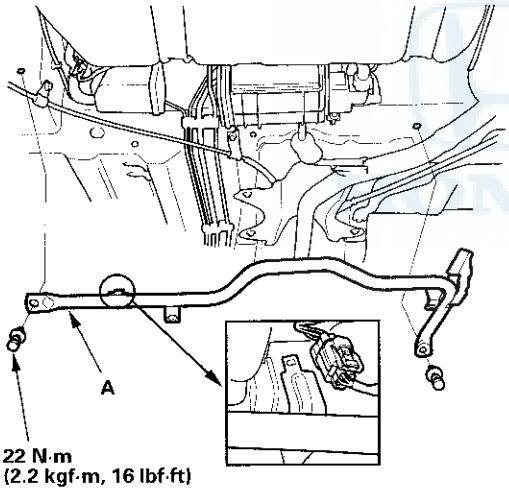

4. Remove the hoses (A), the FTP sensor connector (B), the EVAP canister vent shut valve connector (C) and the bolts (D).

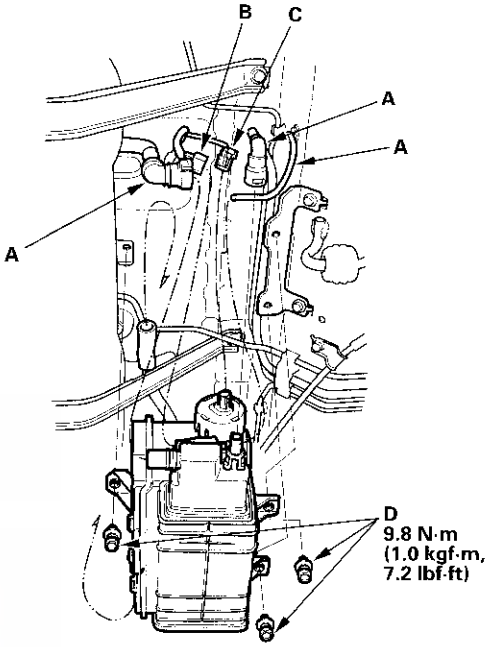

5. Remove the EVAP canister.
6. Install the parts in the reverse order of removal.

FTP Sensor Replacement

1. Raise the vehicle on a lift.
2. Remove the cover (see step 1 on page 11-424).
3. Disconnect the FTP sensor connector (A).

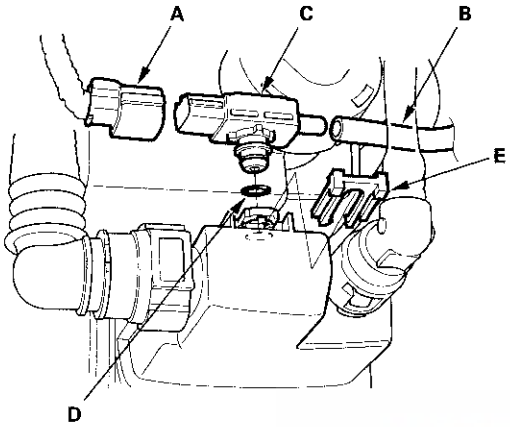

4. Disconnect the air hose (B), and then remove the FTP sensor (C).
5. Install the parts in the reverse order of removal with a new O-ring (D) and retainer (E).

EVAP Canister Vent Shut Valve Replacement

1. Remove the EVAP canister (see page 11-424).
2. Remove the cap (A).

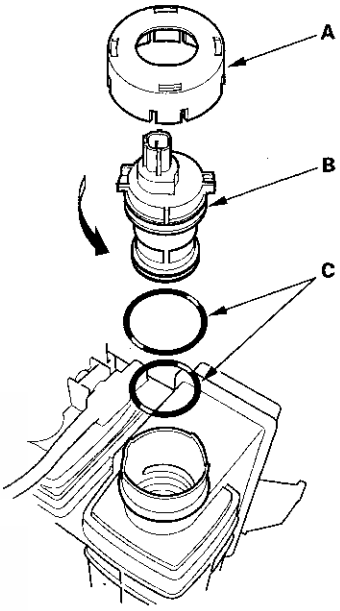

3. Remove the EVAP canister vent shut valve (B).
4. Install the parts in the reverse order of removal with new O-rings (C) and new cap.

   NOTE: Do not coat the O-ring with oil.

EVAP Canister Purge Valve Replacement

1. Remove the air cleaner (see page 11-370).
2. Disconnect the hoses (A) and the EVAP canister purge valve 2P connector (B).

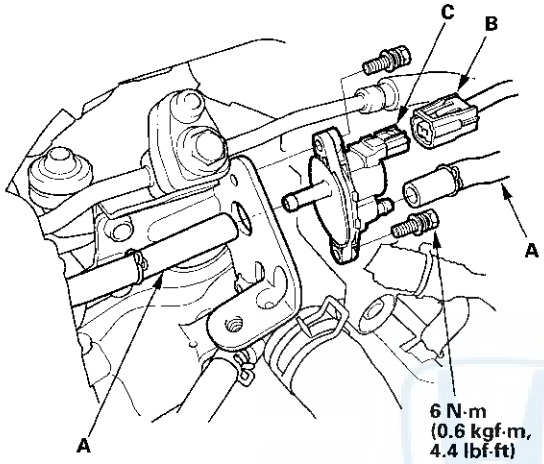

3. Remove the EVAP canister purge valve (C).
4. Install the parts in the reverse order of removal.

EVAP Canister Filter Replacement

1. Raise the vehicle on a lift.
2. Disconnect the hoses (A).

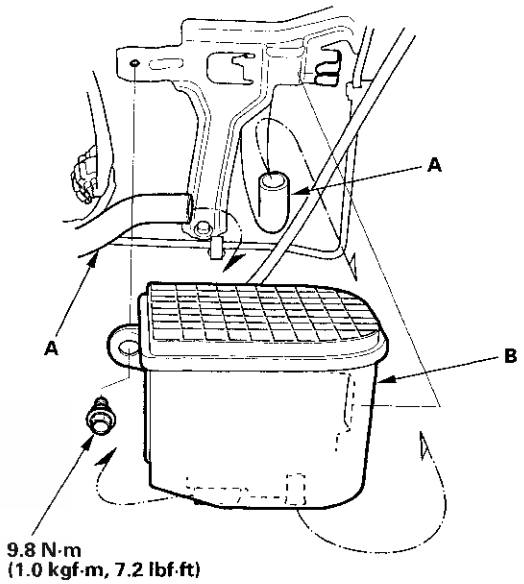

3. Remove the EVAP canister filter (B).
4. Install the parts in the reverse order of removal.

IMA System

IMA System

Special Tools 12-2
Service Precautions 12-3
General Troubleshooting Information 12-5
DTC Troubleshooting Index 12-10
Symptom Troubleshooting Index 12-13
System Description 12-14
Circuit Diagram 12-29
Component Location Index 12-36
DTC Troubleshooting 12-40
IMA System Indicator Circuit Troubleshooting 12-176
Charging System Indicator Circuit Troubleshooting 12-179
IPU Lid Removal/Installation 12-180
BCM Module Update 12-181
BCM Module Removal/Installation 12-182
DC-DC Converter Removal/Installation 12-182
PCU Removal/Installation 12-183
PCU Disassembly/Reassembly 12-185
MCM Update 12-185
MCM Replacement 12-186
Battery Module Removal/Installation 12-187
IPU Module Fan Replacement 12-188
IPU Module Air Duct Removal/Installation 12-188
IPU Case Removal/Installation 12-189
Motor Power Cable Removal/Installation 12-189
IMA Motor Rotor Removal/Installation 12-192
Motor Housing Removal/Installation 12-195
Motor Housing Disassembly/Reassembly 12-196
Motor Rotor Position Sensor Removal/Installation 12-196

Special Tools

Ref. No.	Tool Number	Description	Qty
①	07YAC-PHM010B	Rotor Puller*	1
②	07SAZ-001000A	Backprobe Set	1

* : This tool is available for loan or purchase from AHM Special Tools

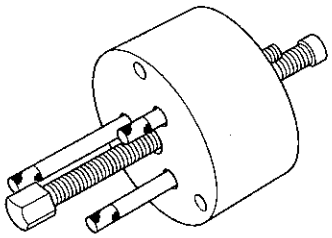

①

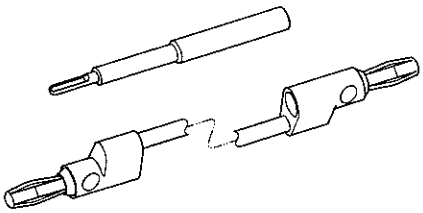

②

Service Precautions

IMA System

- The IMA (integrated motor assisted) system uses high voltage (158 V) circuits. Be sure to shut off the electrical circuits and isolate the IMA system and related parts before servicing the IMA system.

- The high voltage cables and their covers are identified by orange coloring. The caution labels are attached to high voltage and other related parts (see page 1-7). Be careful not to touch these cables and parts without adequate protective gear. The front floor under-cover protecting the high voltage cables is marked ⚠.

- If the 12 V battery has been discharged, or its cable has been disconnected, or the MCM (motor control module) has been reset, the IMA battery level gauge (BAT) will not display the state of charge when the engine is started. Start the engine, and hold it between 3,500 rpm and 4,000 rpm without load (in P or N) until the level gauge (BAT) displays at least three segments.

- Observe the following instructions when inspecting or servicing the IMA system.
  - When the IMA system indicator is on, do the IMA system troubleshooting first (see page 12-5).
  - Wear insulated gloves whenever you inspect or service the IMA system. Be sure to check the gloves for pin holes, tears, or other damage.
  - Turn the battery module switch OFF, and secure the switch in the OFF position with the locking cover before servicing the IMA system (see Turning off power to the high voltage circuit).
  - Wait for 5 or more minutes after turning off the battery module switch, then disconnect the negative cable from the 12 V battery (it takes about 5 minutes for the PDU capacitor to discharge).
  - Before disconnecting the high voltage cable terminals, make sure that the voltage between the terminals is below 30 V when measured with a voltmeter.

- When servicing the parts without the insulating sheath, be sure to use the insulated tools to prevent short circuiting.

- The rotor assembly contains very strong magnets and should be handled with special care. People with pacemakers or other magnetically sensitive medical devices should not handle the rotor assembly.

- Use the special tool to remove or install the rotor assembly.

⚠ WARNING

If the rotor is installed by hand, it may suddenly be pulled toward the stator with great force causing serious hand or finger injury. Always use the special tool to remove or install a rotor assembly.

- Keep the rotor assembly away from magnetically sensitive devices.

- After disconnecting the high voltage terminals, busbars, etc., insulate the parts with insulated tape.

- As a safety warning, attach a sign saying, WORKING ON HIGH VOLTAGE PARTS. DO NOT TOUCH! to the steering wheel.

Disconnecting the motor power cable connector from the motor stator

Turn the ignition switch to LOCK (0). Turn the battery module switch OFF.

Slide the protector (A) in the direction of the arrow. Push the tab (B), then raise the lever (C). Remove the motor power cable (D) from the motor stator.

NOTE:
- If the motor power cable connector is dirty, clean it.
- Cover the disconnected connector (E) with a plastic bag (F), and wrap the motor power cable terminals with tape (G).
- If the motor power cable is wet, wait until it is dry.

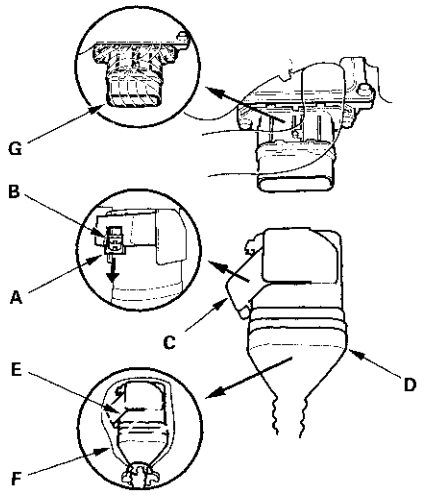

(cont'd)

Service Precautions (cont'd)

Turning Off and On Power to the High Voltage Circuit

The following procedure should be performed prior to working on or near any high voltage components. Follow the procedure exactly. Otherwise, you may be injured or may damage equipment.

1. Turn the ignition switch to LOCK (0), then remove the ignition key.
2. Remove the rear seat-back (see page 20-118).
3. Remove the battery module switch lid (A) from the battery module.

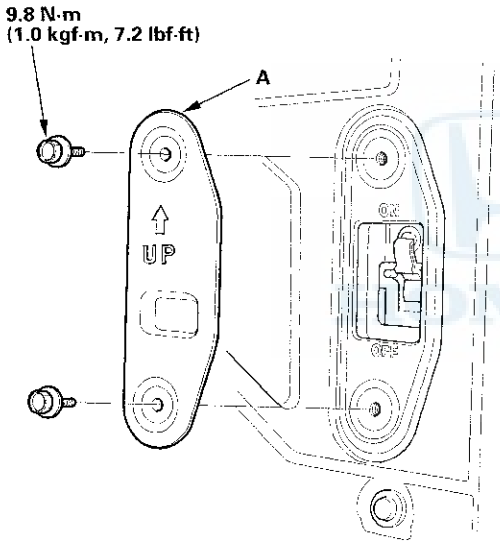

4. Turn the battery module switch (A) OFF, then check that the bolt (B) is showing.

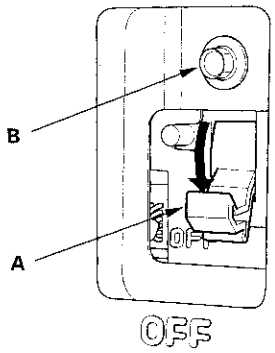

5. Wait at least 5 minutes to allow the PDU capacitors to discharge.
6. Remove the IPU lid (see page 12-180).
7. Measure the voltage at the battery module terminals (A). There should be 30 V or less. If more than 30 V is present, there is a problem in the circuit; do the DTC troubleshooting first.

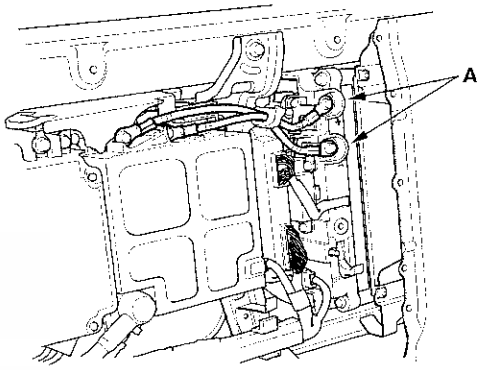

8. After service or repairs are completed:
   - Make sure all the high voltage circuits are connected properly.
   - Install the IPU lid (see page 12-180).
9. Before the battery module switch is turned ON, make sure all the high voltage circuits are connected properly. Then push the button (A), and turn the battery module switch ON.

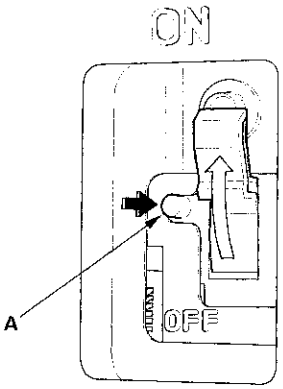

10. Reinstall all remaining removed parts.

General Troubleshooting Information

Intermittent Failures

The term intermittent failure means a system may have had a failure, but it checks OK now. If the IMA system indicator on the dash does not come on, check for poor connections or loose terminals at all connectors related to the circuit you are troubleshooting. If the IMA system indicator was on but then went off, the original problem may have been intermittent.

Opens and Shorts

Open and Short are common electrical terms. An open is a break in a wire or at a connection. A short is an accidental connection of a wire to ground or to another wire. In simple electronics, this usually means something won't work at all. With complex electronics such as the BCM module and the MCM, this can mean something works, but not the way it's supposed to.

How to Use the HDS (Honda Diagnostic System) to Check for DTCs

If the IMA system indicator has come on

1. Start the engine, and check the IMA system indicator (A).

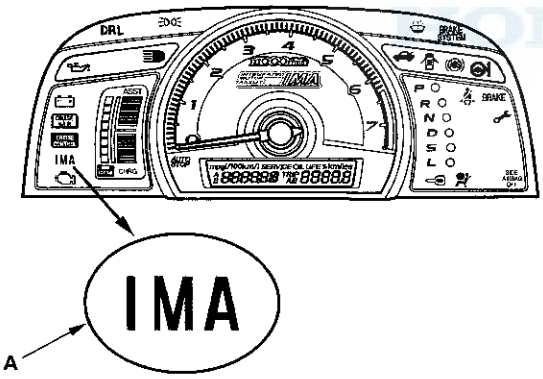

2. If the IMA system indicator stays on, turn the ignition switch to LOCK (0), then connect the HDS to the data link connector (DLC) (A) located under the driver's side of the dashboard.

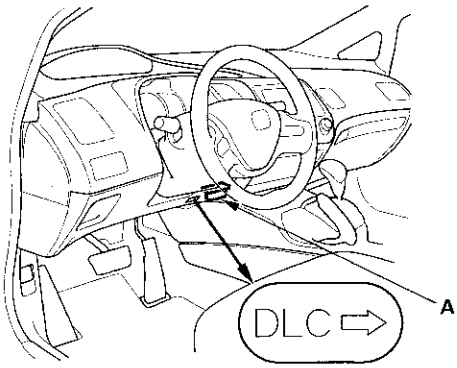

3. Turn the ignition switch to ON (II).

4. Make sure the HDS communicates with the vehicle, the BCM module, and the MCM. If it doesn't, troubleshoot the DLC circuit (see page 11-213).

5. Select IMA SYSTEM on the HDS.

6. Check the diagnostic trouble code (DTC) and note it. Also check the freeze data. Refer to the DTC troubleshooting, and begin the appropriate troubleshooting procedure.

   NOTE: For specific operations, refer to the user's manual that came with the HDS.

If you can't duplicate the DTC
Some of the troubleshooting requires you to reset the BCM module and the MCM, and try to duplicate the DTC. If the problem is intermittent and you can't duplicate the code, do not continue through the procedure. To do so will only result in confusion and, possibly, a needlessly replaced BCM module and MCM.

(cont'd)

General Troubleshooting Information (cont'd)

DTC Clear

1. Turn the ignition switch to ON (II). Do not start the engine.

2. Use the HDS to clear the DTC.

   NOTE: For specific operations, refer to the user's manual that came with the HDS.

How to End a Troubleshooting Session (required after any troubleshooting)

1. Clear the DTC with the HDS.

2. Turn the ignition switch to LOCK (0).

3. Disconnect the HDS from the DLC.

4. If the IMA battery level gauge (BAT) displays no segments, start the engine, and hold it between 3,500 rpm and 4,000 rpm without load (in P or N) until the BAT displays at least three segments.

Motor Rotor Position Calibration

Do the motor rotor position calibration whenever you do any of these actions:

- The MCM is replaced.
- The motor rotor position sensor is replaced or removed during service.
- The IMA motor is replaced.
- The motor stator is replaced.
- The engine assembly is replaced.
- The transmission is replaced.

1. Connect the HDS to the data link connector (DLC) (A) located under the driver's side of the dashboard.

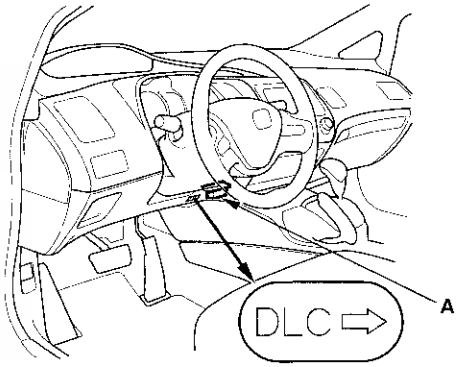

2. Turn the ignition switch to ON (II).

3. Make sure the HDS communicates with the vehicle, the BCM module, and the MCM. If it doesn't, troubleshoot the DLC circuit (see page 11-213).

4. Select IMA SYSTEM on the HDS.

5. Select the MOTOR ROTOR POSITION CALIBRATION in the ADJUSTMENT MENU of the HDS.

6. Turn the ignition switch to LOCK (0), and disconnect the HDS from the DLC.

Troubleshooting Circuits at the BCM Module and the MCM Connectors

Special Tools Required

- Digital multimeter KS-AHM-32-003 (1) or a commercially available digital multimeter
- Backprobe set 07SAZ-001000A (2)

If DTC troubleshooting requires voltage or resistance checks at the BCM module and the MCM connectors, remove the BCM module and disconnect the MCM connectors before doing the checks.

1. Remove the IPU lid (see page 12-180).

2. Connect the backprobe adapters (A) to the stacking patch cords (B), and connect the cords to a digital multimeter.

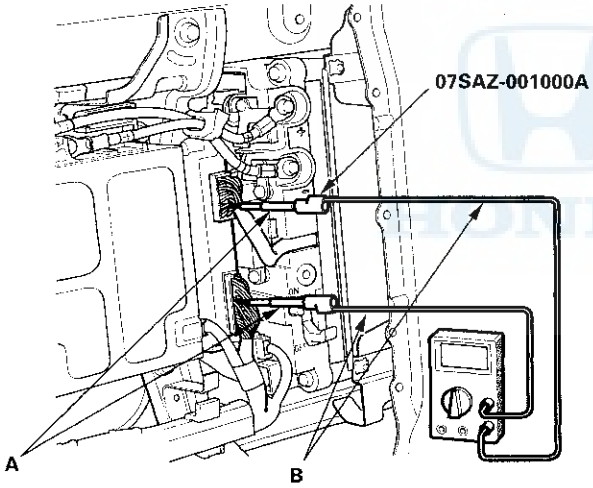

3. Remove the BCM module (see page 12-182), then connect the backprobe adapters (A) to the stacking patch cords (B), and connect the cords to a digital multimeter.

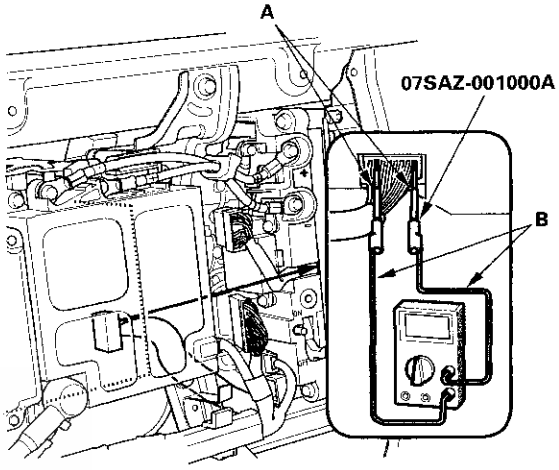

(cont'd)

General Troubleshooting Information (cont'd)

Substituting the MCM

Special Tools Required
- Honda diagnostic system (HDS) tablet tester
- Honda interface module (HIM) and an iN workstation with the latest HDS software version
- HDS pocket tester
- GNA600 and an iN workstation with the latest HDS software version.

Any one of the above updating tools can be used.

Use this procedure when you have to substitute a known-good MCM during a troubleshooting procedure.

1. Remove the MCM (see page 12-186).
2. Install a known-good MCM.
3. Do the MOTOR ROTOR POSITION CALIBRATION in the ADJUSTMENT MENU with the HDS.

   NOTE: If the IMA battery level gauge (BAT) displays no segments, start the engine, and hold it between 3,500 rpm and 4,000 rpm without load (in P or N) until the BAT displays at least three segments.

Substituting the BCM Module

Special Tools Required
- Honda diagnostic system (HDS) tablet tester
- Honda interface module (HIM) and an iN workstation with the latest HDS software version
- HDS pocket tester
- GNA600 and an iN workstation with the latest HDS software version.

Any one of the above updating tools can be used.

Use this procedure when you have to substitute a known-good BCM module during a troubleshooting procedure.

1. Remove the BCM module (see page 12-182).
2. Install a known-good BCM module.

   NOTE: If the IMA battery level gauge (BAT) displays no segments, start the engine, and hold it between 3,500 rpm and 4,000 rpm without load (in P or N) until the BAT displays at least three segments.

OBD Status

The OBD status shows the current system status of each DTC and all of the parameters. This function is used to see if the repair was successfully finished. The results of diagnostic tests for the DTC are displayed as:

- PASSED: The on-board diagnosis is successfully finished.
- FAILED: The on-board diagnosis has finished but failed.
- NOT COMPLETED: The on-board diagnosis was running, but it is out of the enable conditions of the DTC.

DTC Troubleshooting Index

DTC (IMA System Indicator*1)	Detection Item	IMA System Indicator	Page
P0562 (15)*2	Battery Condition Monitor (BCM) Module System Low Voltage	ON	(see page 12-40)
P0562 (94)*2	Motor Control Module (MCM) System Low Voltage	ON	(see page 12-42)
P0602 (91)*2	Motor Control Module (MCM) Programming Error	ON	(see page 12-45)
P0602 (92)*2	Battery Condition Monitor (BCM) Module Programming Error	ON	(see page 12-45)
P0603 (60)	Motor Control Module (MCM) Internal Circuit Keep Alive Memory (KAM) Error	ON	(see page 12-46)
P0607 (82)	Battery Condition Monitor (BCM) Module Performance Problem	ON	(see page 12-47)
P0A1F (112)	F-CAN Malfunction (Battery Condition Monitor (BCM) Module-Motor Control Module (MCM))	ON	(see page 12-48)
P0A27 (46)	High Voltage Contactor/Bypass Contactor Stays Activated	ON	(see page 12-50)
P0A3C (39)	Motor Control Module (MCM) Overheating	ON	(see page 12-53)
P0A3F (89)	Motor Rotor Position Sensor Circuit Malfunction	ON	(see page 12-54)
P0A5E (24)	U Phase Motor Current Sensor Circuit Low Voltage	ON	(see page 12-58)
P0A5F (25)	U Phase Motor Current Sensor Circuit High Voltage	ON	(see page 12-59)
P0A61 (26)	V Phase Motor Current Sensor Circuit Low Voltage	ON	(see page 12-60)
P0A62 (27)	V Phase Motor Current Sensor Circuit High Voltage	ON	(see page 12-61)
P0A64 (28)	W Phase Motor Current Sensor Circuit Low Voltage	ON	(see page 12-62)
P0A65 (29)	W Phase Motor Current Sensor Circuit High Voltage	ON	(see page 12-63)
P0A78 (32)	Motor Control Module (MCM) Internal Circuit Malfunction	ON	(see page 12-64)
P0A7E (72)	Battery Module Overheating	ON	(see page 12-65)
P0A7F (78)	Battery Module Deterioration	ON	(see page 12-65)
P0A94 (48)	DC-DC Converter Output Low Voltage	OFF	(see page 12-66)
P0A9D (49)	Battery Module Temperature Sensor 1 Circuit Low Voltage	ON	(see page 12-68)
P0A9E (50)	Battery Module Temperature Sensor 1 Circuit High Voltage	ON	(see page 12-70)
P0AA6 (59)	High Voltage Circuit Isolation Problem	ON	(see page 12-73)
P0AA7 (76)	Battery Condition Monitor (BCM) Module Internal Circuit Malfunction	ON	(see page 12-80)
P0AC0 (65)	Battery Current Sensor Circuit Malfunction	ON	(see page 12-81)
P0AC7 (51)	Battery Module Temperature Sensor 2 Circuit Low Voltage	ON	(see page 12-83)
P0AC8 (52)	Battery Module Temperature Sensor 2 Circuit High Voltage	ON	(see page 12-85)
P0ACC (53)	Battery Module Temperature Sensor 3 Circuit Low Voltage	ON	(see page 12-88)
P0ACD (54)	Battery Module Temperature Sensor 3 Circuit High Voltage	ON	(see page 12-90)
P0AE1 (62)	Bypass Contactor Malfunction	ON	(see page 12-93)
P0AEE (109)	Motor Control Module (MCM) Internal Circuit Malfunction	ON	(see page 12-98)
P0AEF (110)	Motor Control Module (MCM) Internal Temperature Sensor Circuit Low Voltage	ON	(see page 12-99)
P0AF0 (111)	Motor Control Module (MCM) Internal Temperature Sensor Circuit High Voltage	ON	(see page 12-100)
P1435 (58)*3	Charge/Discharge Balance Malfunction	OFF	(see page 12-100)

* 1: These DTCs are indicated by a blinking IMA system indicator when the SCS line is jumped with the HDS.
* 2: To determine the correct troubleshooting procedure for these DTCs, jump the SCS line with the HDS, and read the flash code.
* 3: '06-08 models

DTC (IMA System Indicator *1)	Detection Item	IMA System Indicator	Page
P1437 (41)	Motor Control Module (MCM) Circuit Shorted	ON	(see page 12-101)
P1440 (57)	Motor Control Module (MCM) Circuit Malfunction	ON	(see page 12-103)
P1446 (74)	Battery Module Individual Voltage Input Deviation	ON	(see page 12-108)
P1448 (63)	Intelligent Power Unit (IPU) Module Fan Problem	ON	(see page 12-110)
P1570 (66)	Battery Module Individual Voltage Problem	ON	(see page 12-113)
P1574 (68)	Battery Module Temperature Signal Circuit Malfunction	ON	(see page 12-115)
P1575 (12)	Motor Control Module (MCM) Voltage Malfunction	ON	(see page 12-116)
P1585 (30)	Motor Current Sensor Circuit Malfunction	ON	(see page 12-121)
P1586 (23)	Battery Current Sensor Signal Malfunction	ON	(see page 12-122)
P15A4 (81)	A/C Compressor Driver Relay Stays Activated	ON	(see page 12-125)
P15A5 (85)	Motor Current Sensor Circuit Malfunction	ON	(see page 12-127)
P15A6 (86)	U Phase Motor Current Sensor Circuit Malfunction	ON	(see page 12-130)
P15A7 (87)	V Phase Motor Current Sensor Circuit Malfunction	ON	(see page 12-131)
P15A8 (88)	W Phase Motor Current Sensor Circuit Malfunction	ON	(see page 12-132)
P15AA (93)	Motor Rotor Position Not Learned	ON	(see page 12-133)
P1629 (79)	Battery Current Sensor Circuit Malfunction	ON	(see page 12-134)
P1673 (22)	Motor Control Module (MCM) Relay Stays Activated	ON	(see page 12-136)
P16C3 (31)	DC-DC Converter Temperature Sensor Circuit Malfunction	ON	(see page 12-138)
U0028 (107) *2	F-CAN Malfunction (BUS-OFF (Motor Control Module (MCM)))	ON	(see page 12-139)
U0028 (108) *2	F-CAN Malfunction (BUS-OFF (Battery Condition Monitor (BCM) Module))	ON	(see page 12-140)
U0037 (98) *2	IMA-CAN Malfunction (BUS-OFF (Motor Control Module (MCM)))	ON	(see page 12-142)
U0037 (99) *2	IMA-CAN Malfunction (BUS-OFF (Battery Condition Monitor (BCM) Module))	ON	(see page 12-142)
U0100 (102) *2	F-CAN Malfunction (Powertrain Control Module (PCM) (CVT System)-Motor Control Module (MCM))	ON	(see page 12-146)
U0100 (103) *2	F-CAN Malfunction (Powertrain Control Module (PCM) (CVT System)-Battery Condition Monitor (BCM) Module)	ON	(see page 12-148)
U0110 (101)	F-CAN Malfunction (Battery Condition Monitor (BCM) Module-Motor Control Module (MCM))	ON	(see page 12-149)
U0111 (100)	F-CAN Malfunction (Battery Condition Monitor (BCM) Module-Motor Control Module (MCM))	OFF	(see page 12-154)
U0155 (106)	F-CAN Malfunction (Gauge Control Module-Battery Condition Monitor (BCM) Module)	ON	(see page 12-156)
U1204 (55) *2	IMA-CAN Malfunction (Powertrain Control Module (PCM)-Battery Condition Monitor (BCM) Module)	ON	(see page 12-156)
U1204 (95) *2	IMA-CAN Malfunction (Powertrain Control Module (PCM)-Motor Control Module (MCM))	ON	(see page 12-159)

* 1: These DTCs are indicated by a blinking IMA system indicator when the SCS line is jumped with the HDS.
* 2: To determine the correct troubleshooting procedure for these DTCs, jump the SCS line with the HDS, and read the flash code.

(cont'd)

DTC Troubleshooting Index (cont'd)

DTC (IMA System Indicator*1)	Detection Item	IMA System Indicator	Page
U1205 (75)	IMA-CAN Malfunction (Battery Condition Monitor (BCM) Module-Motor Control Module (MCM))	ON	(see page 12-161)
U1206 (64)	IMA-CAN Malfunction (Battery Condition Monitor (BCM) Module-Motor Control Module (MCM))	ON	(see page 12-166)
U1207 (80)	IMA-CAN Malfunction (A/C Compressor Driver Battery Condition Monitor (BCM) Module)	ON	(see page 12-168)
U1220 (34)	DC-DC Converter Lost Communication With Battery Condition Monitor (BCM) Module	ON	(see page 12-170)
U1221 (35)	Battery Condition Monitor (BCM) Module Lost Communication with DC-DC Converter	ON	(see page 12-172)

* 1: These DTCs are indicated by a blinking IMA system indicator when the SCS line is jumped with the HDS.

HONDA

Symptom Troubleshooting Index

When the vehicle has one of these symptoms, check for a diagnostic trouble code (DTC) with the HDS. If there is no DTC, do the diagnostic procedure for the symptom.

Symptom	Diagnostic procedure
IMA system indicator stays on or never comes on, no DTCs set	Troubleshoot the IMA system indicator circuit (see page 12-176).
Charging system indicator stays on or never comes on, no DTCs set	Troubleshoot the charging system indicator circuit (see page 12-179).
HDS does not communicate with the MCM, the BCM module, or the vehicle	Troubleshoot the DLC circuit (see page 11-213).

HONDA

IMA System

System Description

BCM Module Inputs and Outputs at Connector A (40P)

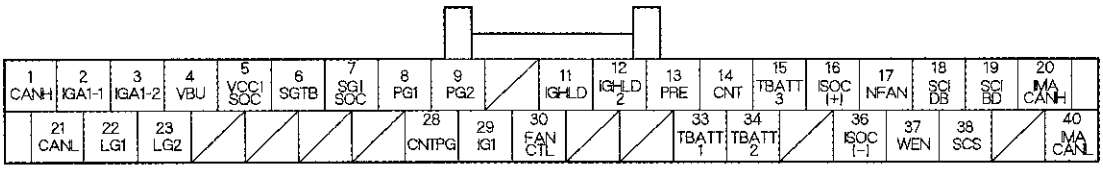

Wire side of female terminals

NOTE: Standard battery voltage is about 12 V.

Terminal number	Wire color	Terminal name	Description	Signal
1	WHT	CANH (CAN COMMUNICATION SIGNAL HIGH)	Sends and receives communication signal	With ignition switch ON (II): pulses
2*1	PNK	IGA1-1 (IGNITION FOR ASSIST SYSTEM)	Power source for BCM module control circuit	With ignition switch ON (II): battery voltage With ignition switch OFF: battery voltage for about 10 seconds, then about 0 V
3	PNK	IGA1-2 (IGNITION FOR ASSIST SYSTEM)	Power source for BCM module control circuit	With ignition switch ON (II): battery voltage With ignition switch OFF: battery voltage for about 10 seconds, then about 0 V
4	WHT	VBU (VOLTAGE BACK UP)	Power source for BCM module circuit Power source for DTC memory	Battery voltage at all times
5	BRN	VCCISOC (I. STATE OF CHARGE SENSOR VOLTAGE)	Battery current sensor power	With ignition switch ON (II): about 5.0 V With ignition switch OFF: about 0 V after 10 seconds
6	BLK	SGTB (BATTERY TEMPERATURE SENSOR GROUND)	Battery module (temperature sensor) ground	Less than 0.1 V at all times
7	BLU	SGISOC (I. STATE OF CHARGE SENSOR GROUND)	Battery current sensor ground	Less than 0.1 V at all times
8*1	BLK	PG1 (POWER GROUND)	Ground for BCM module	Less than 0.1 V at all times
9	BLK	PG2 (POWER GROUND)	Ground for BCM module	Less then 0.1 V at all times
11	ORN	IGHLD (IGNITION HOLD)	Drives MCM relay 1	With ignition switched from ON (II) to OFF: 0—1.0 V for several seconds, then battery voltage
12	LT GRN	IGHLD2 (IGNITION HOLD 2)	Drives MCM relay 2	With ignition switched from ON (II) to OFF: about 0 V for several seconds
13	RED	PRE (PRE CHARGE CONTACTOR)	Drives bypass contactor momentarily	With ignition switch ON (II): about 0 V
14	BLK	CNT (CONTACTOR)	Drives high voltage contactor	With ignition switch ON (II): more than 6.0 V
15	WHT	TBATT3 (BATTERY 3 TEMPERATURE)	Battery module TBATT3 temperature signal 3 input	With ignition switch ON (II): about 0.5—4.5 V (depending on battery module temperature)
16	PUR	ISOC (+) (I. STATE OF CHARGE +SIDE)	Battery current sensor signal input	With ignition switch ON (II): about 2.5 V
17	PUR	NFAN (FAN SPEED)	Detects IPU module fan speed signal	IPU module fan OFF: about 0 or 5 V IPU module fan ON: pulses
18	GRY	SCIDB (SERIAL INPUT FOR DC-DC CONVERTER)	Detects pulsing communication signal	With ignition switch ON (II): pulses
19	GRN	SCIBD (SERIAL OUTPUT FOR DC-DC CONVERTER)	Sends and receives communication signal	With ignition switch ON (II): pulses

* 1: '06-07 models

BCM Module Inputs and Outputs at Connector A (40P)

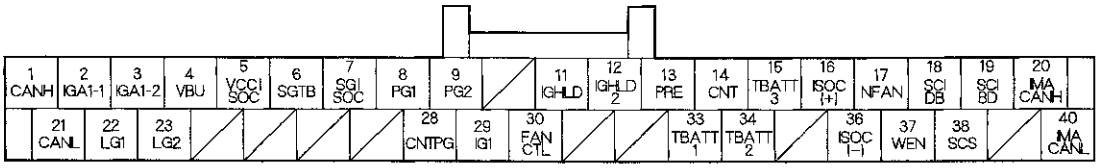

Wire side of female terminals

NOTE: Standard battery voltage is about 12 V.

Terminal number	Wire color	Terminal name	Description	Signal
20	WHT	IMACANH (IMA CAN COMMUNICATION SIGNAL HIGH)	PCM, MCM, and A/C compressor driver communication signal	With ignition switch ON (II): pulses
21	RED	CANL (CAN COMMUNICATION SIGNAL LOW)	Sends and receives communication signal	With ignition switch ON (II): pulses
22*1	BRN	LG1 (LOGIC GROUND)	Ground for BCM module	Less than 0.1 V at all times
23	BRN	LG2 (LOGIC GROUND)	Ground for BCM module	Less than 0.1 V at all times
28	GRY	CNTPG (CONTACTOR POWER GROUND)	Ground for high voltage contactor	Less than 0.1 V at all times
29	YEL/BLK	IG1	BCM module power	With ignition switch ON (II): battery voltage With ignition switch OFF: about 0 V
30	LT BLU	FANCTL (FAN CONTROL)	IPU module fan speed control signal output	IPU module fan OFF: battery voltage IPU module fan ON: duty controlled
33	YEL	TBATT1 (BATTERY 1 TEMPERATURE)	Battery module TBATT1 temperature signal 1 input	With ignition switch ON (II): about 0.5—4.5 V (depending on battery module temperature)
34	GRY	TBATT2 (BATTERY 2 TEMPERATURE)	Battery module TBATT2 temperature signal 2 input	With ignition switch ON (II): about 0.5—4.5 V (depending on battery module temperature)
36	LT GRN	ISOC (—) (I. STATE OF CHARGE —SIDE)	Battery current sensor signal input	With ignition switch ON (II): about 2.5 V
37	RED/WHT	WEN (WRITE ENABLE SIGNAL)	Write enable signal input	With ignition switch ON (II): about 0 V
38	LT BLU	SCS (SERVICE CHECK SIGNAL)	Detects service check signal	With service check signal shorted using HDS: about 0 V With service check signal opened: about 5.0 V
40	RED	IMACANL (IMA CAN COMMUNICATION SIGNAL LOW)	PCM, MCM, and A/C compressor driver communication signal	With ignition switch ON (II): pulses

* 1: '06-07 models

(cont'd)

System Description (cont'd)

BCM Module Inputs and Outputs at Connector B (14P)

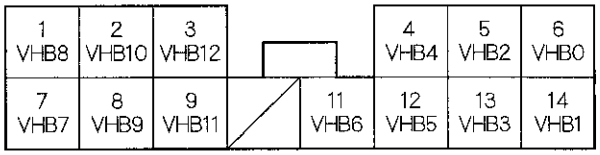

Wire side of female terminals

Terminal number	Wire color	Terminal name	Description	Signal
1	BLU/RED	VHB8 (HIGH VOLTAGE BATTERY 8 VOLTAGE)	Battery module No. 8 terminal voltage input	With battery module switch ON: about 4/11 of VHB0 voltage (compared to VHB12 terminal)
2	YEL	VHB10 (HIGH VOLTAGE BATTERY 10 VOLTAGE)	Battery module No. 10 terminal voltage input	With battery module switch ON: about 2/11 of VHB0 voltage (compared to VHB12 terminal)
3	WHT	VHB12 (HIGH VOLTAGE BATTERY 12 VOLTAGE)	Battery module No. 12 terminal voltage input	
4	GRN/RED	VHB4 (HIGH VOLTAGE BATTERY 4 VOLTAGE)	Battery module No. 4 terminal voltage input	With battery module switch ON: about 7/11 of VHB0 voltage (compared to VHB12 terminal)
5	BLK	VHB2 (HIGH VOLTAGE BATTERY 2 VOLTAGE)	Battery module No. 2 terminal voltage input	With battery module switch ON: about 9/11 of VHB0 voltage (compared to VHB12 terminal)
6	RED	VHB0 (HIGH VOLTAGE BATTERY 0 VOLTAGE)	Battery module No. 0 terminal voltage input	With battery module switch ON: below 200 V (compared to VHB12 terminal)
7	BLU/YEL	VHB7 (HIGH VOLTAGE BATTERY 7 VOLTAGE)	Battery module No. 7 terminal voltage input	With battery module switch ON: about 5/11 of VHB0 voltage (compared to VHB12 terminal)
8	GRN/BLK	VHB9 (HIGH VOLTAGE BATTERY 9 VOLTAGE)	Battery module No. 9 terminal voltage input	With battery module switch ON: about 3/11 of VHB0 voltage (compared to VHB12 terminal)
9	BLU	VHB11 (HIGH VOLTAGE BATTERY 11 VOLTAGE)	Battery module No. 11 terminal voltage input	With battery module switch ON: about 1/11 of VHB0 voltage (compared to VHB12 terminal)
11	PNK	VHB6 (HIGH VOLTAGE BATTERY 6 VOLTAGE)	Battery module No. 6 terminal voltage input	With battery module switch ON: about 5/11 of VHB0 voltage (compared to VHB12 terminal)
12	GRN/WHT	VHB5 (HIGH VOLTAGE BATTERY 5 VOLTAGE)	Battery module No. 5 terminal voltage input	With battery module switch ON: about 6/11 of VHB0 voltage (compared to VHB12 terminal)
13	GRN	VHB3 (HIGH VOLTAGE BATTERY 3 VOLTAGE)	Battery module No. 3 terminal voltage input	With battery module switch ON: about 8/11 of VHB0 voltage (compared to VHB12 terminal)
14	GRN/YEL	VHB1 (HIGH VOLTAGE BATTERY 1 VOLTAGE)	Battery module No. 1 terminal voltage input	With battery module switch ON: about 10/11 of VHB0 voltage (compared to VHB12 terminal)

MCM Inputs and Outputs at the MCM Connector (20P)

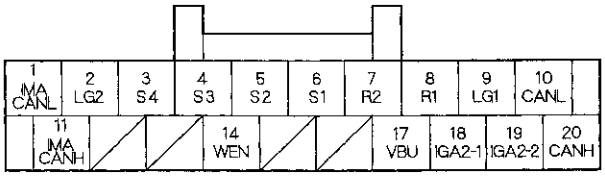

Wire side of female terminals

NOTE: Standard battery voltage is about 12 V.

Terminal number	Wire color	Terminal name	Description	Signal
1	RED	IMACANL (IMA CAN COMMUNICATION SIGNAL LOW)	PCM, BCM module, and A/C compressor driver communication signal	With ignition switch ON (II): pulses
2	BRN	LG2 (LOGIC GROUND)	Ground for MCM	Less than 0.1 V at all times
3	YEL	S4 (MOTOR ROTOR POSITION SENSOR S4 SIGNAL)	Motor rotor position sensor S4 signal	With engine running: pulses
4	WHT	S3 (MOTOR ROTOR POSITION SENSOR S3 SIGNAL)	Motor rotor position sensor S3 signal	With engine running: pulses
5	BLU	S2 (MOTOR ROTOR POSITION SENSOR S2 SIGNAL)	Motor rotor position sensor S2 signal	With engine running: pulses
6	GRN	S1 (MOTOR ROTOR POSITION SENSOR S1 SIGNAL)	Motor rotor position sensor S1 signal	With engine running: pulses
7	RED	R2 (MOTOR ROTOR POSITION SENSOR R2 SIGNAL)	Motor rotor position sensor R2 signal	With engine running: pulses
8	BRN	R1 (MOTOR ROTOR POSITION SENSOR R1 SIGNAL)	Motor rotor position sensor R1 signal	With engine running: pulses
9*1	BRN	LG1 (LOGIC GROUND)	Ground for MCM	Less than 0.1 V at all times
10	RED	CANL (CAN COMMUNICATION SIGNAL LOW)	Sends and receives communication signal	With ignition switch ON (II): pulses
11	WHT	IMACANH (IMA CAN COMMUNICATION SIGNAL HIGH)	PCM, BCM module, and A/C compressor driver communication signal	With ignition switch ON (II): pulses

* 1: '06-07 models

(cont'd)

System Description (cont'd)

MCM Inputs and Outputs at the MCM Connector (20P)

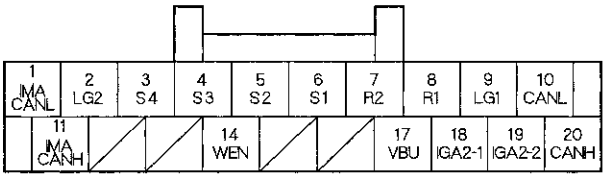

Wire side of female terminals

NOTE: Standard battery voltage is about 12 V.

Terminal number	Wire color	Terminal name	Description	Signal
14	RED/WHT	WEN (WRITE ENABLE SIGNAL)	Write enable signal input	With ignition switch ON (II): about 0 V
17	WHT	VBU (VOLTAGE BACK UP)	Power source for MCM circuit Power source for DTC memory	Battery voltage at all times
18	RED	IGA2-1 (IGNITION FOR ASSIST SYSTEM)	Power source for BCM module control circuit	With ignition switch ON (II): battery voltage With ignition switch OFF: battery voltage for several seconds, then about 0 V
19*1	RED	IGA2-2 (IGNITION FOR ASSIST SYSTEM)	Power source for BCM module control circuit	With ignition switch ON (II): battery voltage With ignition switch OFF: battery voltage for several seconds, then about 0 V
20	WHT	CANH (CAN COMMUNICATION SIGNAL HIGH)	Sends and receives communication signal	With ignition switch ON (II): pulses

* 1: '06-07 models

IMA System

The IMA (integrated motor assisted) system is a highly-efficient parallel hybrid drive system consisting of a main power unit (gasoline-fueled engine) and the assist unit (electric IMA motor).

The engine is an in-line 4-cylinder 8-valve power plant that has a displacement of 82 cu. in (1.339 liters). To reduce fuel consumption, the engine is equipped with i-DSI lean-burn control and a valve pause system that reduces engine pumping loss and increases the regeneration of electric energy during deceleration.

The IMA motor, directly connected to the engine crankshaft, functions as a generator during deceleration, an engine starter, and a motor to assist the engine that drives the wheels.

The IMA system contains the DC 158 V battery and AC synchronous motor, control system, and related accessories. For safety, the intelligent power unit (IPU) is located behind the rear seat.

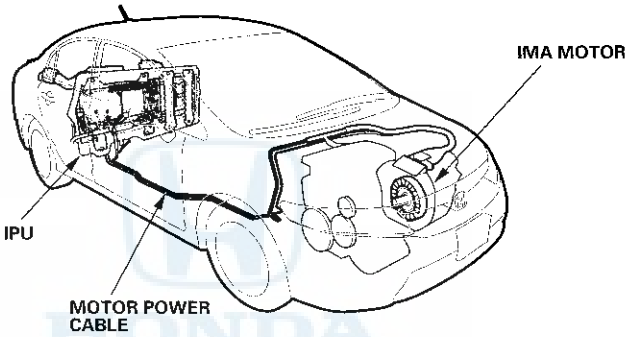

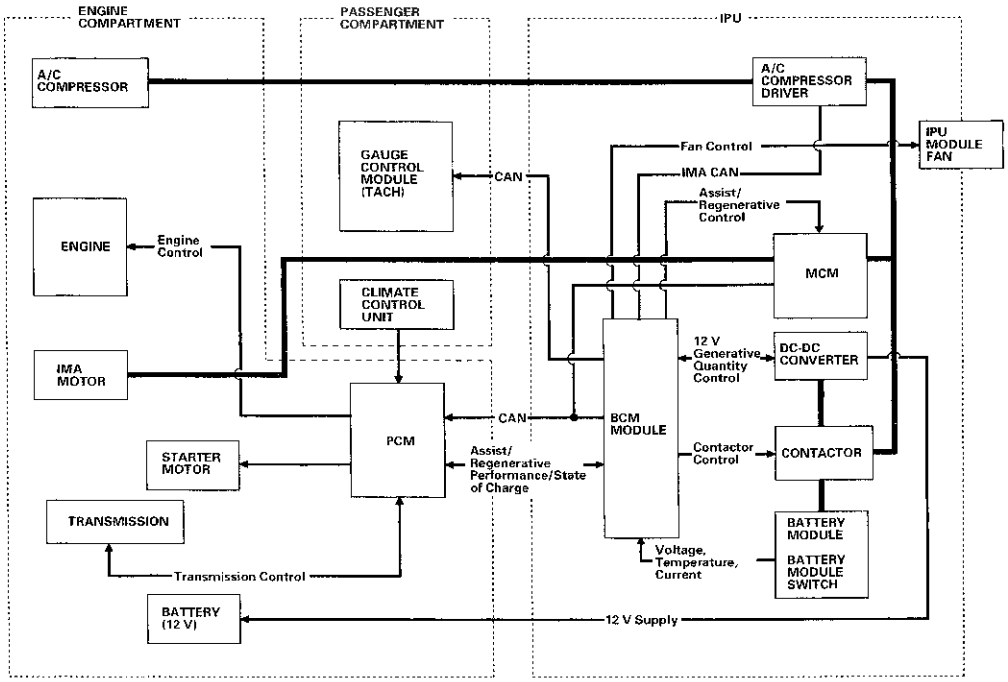

(cont'd)

System Description (cont'd)

Operating Condition

Vehicle stop mode (Idle stop)
The engine stops idling if the IMA battery has enough electricity left.

Start running mode (Engine and IMA motor)
The engine runs with low lift cam. The IMA motor assists torque.

Slow acceleration mode (Engine only)
The engine runs with low lift cam. The IMA motor does not assist.

Low speed cruise mode (IMA motor only)
The IMA motor runs the vehicle by itself if the IMA battery has enough electricity left. The intake and exhaust valves pause to reduce valve spring compression and pumping loss.

Acceleration from low speed mode (Engine and IMA motor)
The engine runs with low lift cam. The IMA motor assists torque.

High acceleration from low speed mode (Engine and IMA motor)
The engine runs with low lift cam. The IMA motor assists torque.

High speed cruise mode (Engine only)
The engine runs with low lift cam. The IMA motor does not assist.

Deceleration mode (IMA battery charge)
The intake and exhaust valves pause to reduce engine braking force. The IMA motor prevents engine braking force by charging the IMA battery.

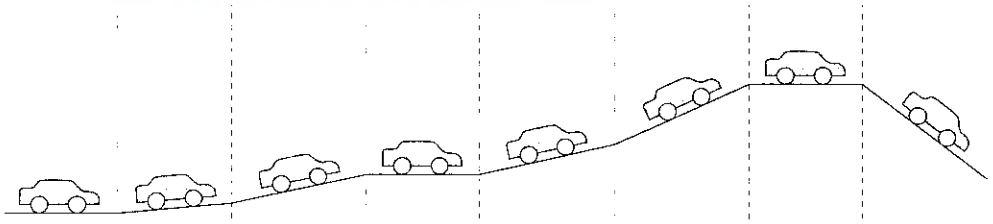

Drive pattern	Stop	Start running	Slow acceleration	Low speed cruise	Acceleration	High acceleration	High speed cruise	Deceleration
Engine	Idle stop	Low lift	Low lift	Valve pause	Low lift	High lift	Low lift	Valve pause
IMA Motor	Stop	Assist	Stop	Motor only	Assist	Assist	Stop	Charge
Assist amount (Gauge)	ASST CHRG	ASST CHRG	ASST CHRG	ASST CHRG	ASST CHRG	ASST CHRG	ASST CHRG	ASST CHRG

Engine start

The IMA system drives the IMA motor, starts the engine at normal start, and restarts the engine after auto-stop. The IMA motor is directly connected to the engine crankshaft, so it is quieter than the 12 V starter. If a problem occurs with the IMA system, for example, low battery module state of charge (SOC), low temperature, faulty IMA system, etc, the PCM receives a signal from the MCM and starts the engine with the 12 V starter.

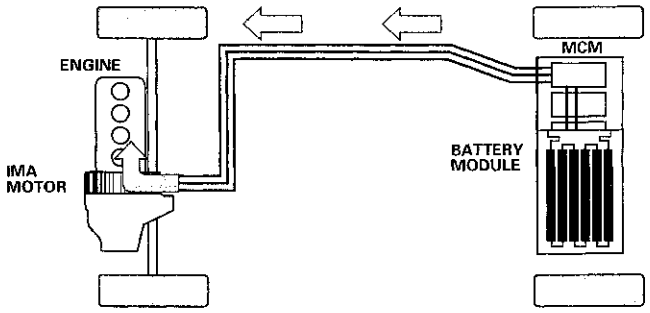

Motor assisting function

During acceleration, energy is supplied from the battery module to the IMA motor, and the motor generates a maximum torque of 103 N·m (10.5 kgf·m, 76 lbf·ft) to assist the engine. The PCM and MCM communicate to control the assist to maintain the battery module SOC within a specified range. When the battery module SOC is below the specified range, the MCM stops the assist to prevent over-discharge or damage to the battery. Assist is also not available when the IMA battery is very cold or very hot.

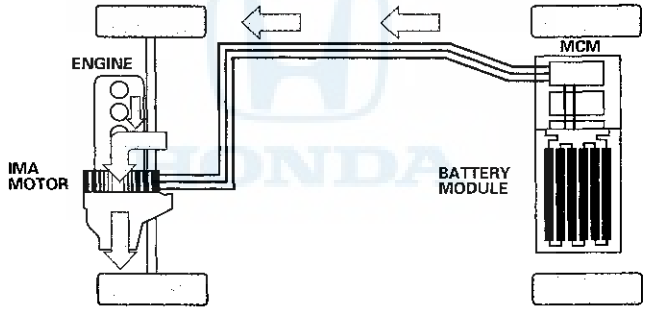

Regenerative control (at deceleration)

During deceleration, the IMA motor, driven by the wheels, functions as a generator. It charges the battery module by generating electrical energy. This is done by converting the kinetic energy of the vehicle during braking into electric energy that is stored in the IMA battery. When the battery module is full, regeneration stops to prevent overcharge of the battery.

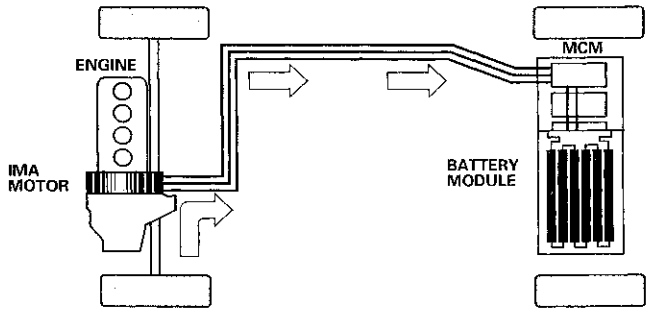

(cont'd)

System Description (cont'd)

Auto Idle Stop System

The auto idle stop system stops the engine automatically when the vehicle comes to a stop to reduce overall fuel consumption and minimize tailpipe emissions. Refer to the chart to see the conditions when auto idle stop occurs and when it does not occur.

Idle stop occurs:	• When the vehicle is driven above 7 mph (12 km/h) in D, and then decelerated with the brake pedal pressed (operation speed varies depending on the conditions). • When the vehicle is driven above 7 mph (12 km/h) in D after restart from auto idle stop, and then decelerated with the brake pedal pressed. Under this condition, idle stop happens only twice.
Idle stop does not occur:	• When the vehicle stops suddenly by sharp application of the brake pedal. • When the engine coolant temperature is low. • When the climate control unit prohibits the engine from stopping.*1 • When the PCM (CVT system) prohibits the engine from stopping.*2 • When the IMA battery state of charge is low. • When the IMA battery module temperature is low. • When the electric load on the 12 V system is high. • When the accelerator pedal is pressed. • When the windshield defrost button is pressed. • When a fault is detected in a related system.*3

* 1: With the ambient temperature at 5 °F (−15 °C) or below.
* 2: When the CVT fluid temperature is low.
* 3: PGM-FI system, IMA system, CVT system, A/C system, etc.

The PCM restarts the engine by signalling the MCM to drive the IMA motor and by restarting fuel injection. Refer to the chart to see the conditions of engine restart.

Engine restart occurs:	• When the brake pedal is released. • When the shift lever is moved from N to R, or from D to L. • When the accelerator pedal is pressed. • When the engine coolant temperature is low. • When the IMA battery state of charge is low.

Auto Stop Indicator

When auto idle stop is operating, the auto stop indicator blinks. If the driver's door is opened during auto idle stop, the auto stop indicator blinks and the warning buzzer sounds to remind the driver that auto stop is in operation.

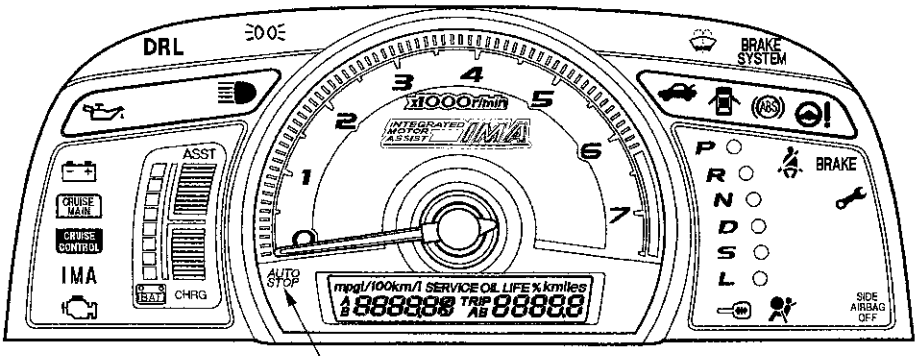

AUTO STOP INDICATOR

Battery Condition Monitor (BCM) Module

The BCM module computes the battery module state of charge (SOC) and controls the IPU module fan. The system's SOC is computed by the BCM module using voltage, temperature, input current, and output current readings from the battery module.

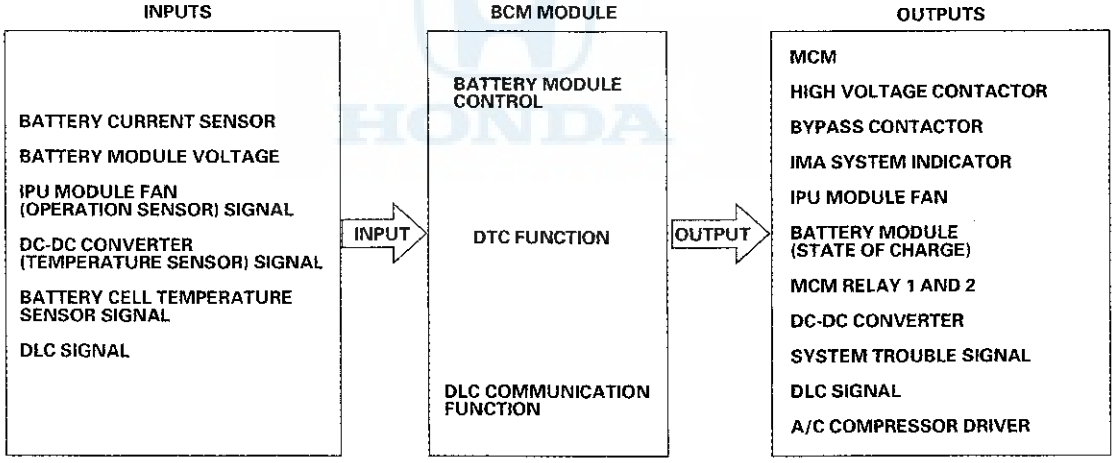

(cont'd)

System Description (cont'd)

Motor Control Module (MCM)
The MCM converts 158 V DC power into 3-phase AC power to run the electric motor during assist. During regeneration, the MCM converts AC voltage to DC.

The MCM controls the DC/AC conversion (from the IMA battery's 158 V DC to the IMA motor's 3-phase AC, and vice versa).

The MCM is air cooled. The heat fed through the heat sink is exhausted to the trunk compartment and outside the vehicle by the IPU module fan.

The MCM controls the IMA motor to control the assist and regeneration.

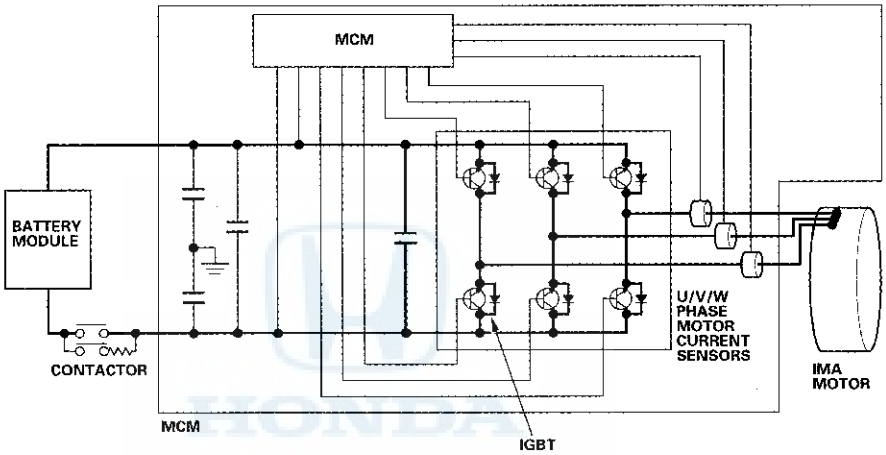

IMA Motor
The IMA motor is a synchronous AC type that converts electrical energy into kinetic energy and vice versa. It assists the engine during acceleration and starts the engine.

The motor is located between the engine and the transmission. It consists of a 3-phase coil stator and a permanent magnet rotor that is directly connected to the engine crankshaft. A motor rotor position sensor is mounted on the back of the engine block to detect the position of the rotor.

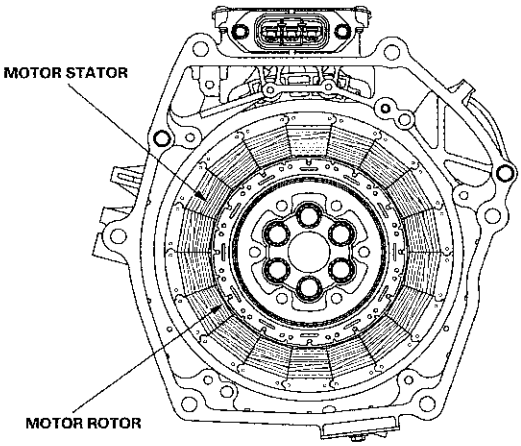

Battery Module
A light-weight and compact Ni-MH (nickel-metal hydride) battery supplies energy to the IMA system.

The battery has 11 modules that are connected in series. Within each module are 12 1.2 V cells. Total battery voltage is a nominal 158 V, and maximum capacity is 5.5 Ah.

The battery module has three built-in thermistor-type temperature sensors to monitor the abnormal battery conditions.

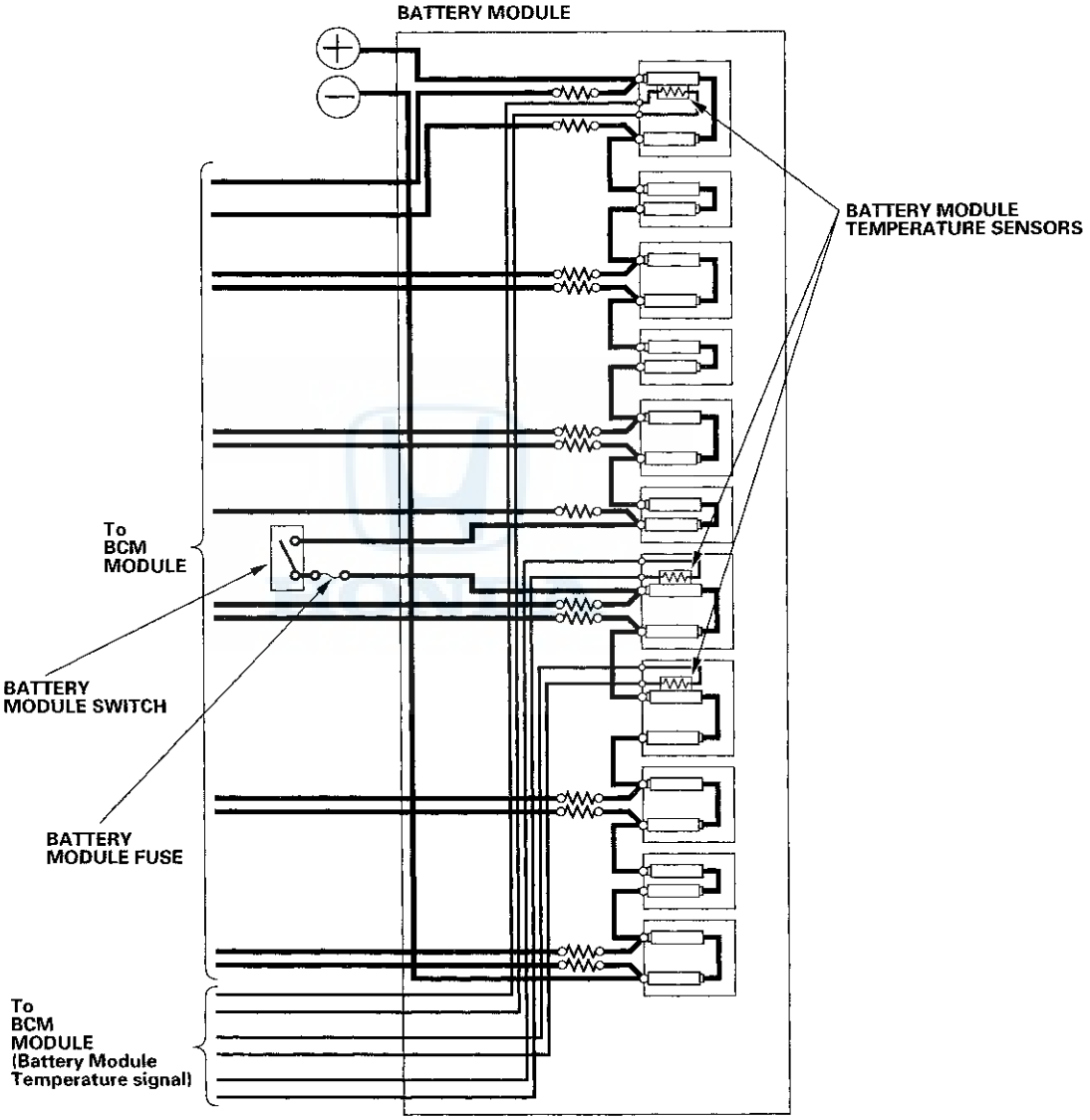

Battery Module Switch
The battery module switch is connected in series to the battery module fuse. Always turn the battery module switch to the OFF position whenever service or checks are required on or around the high voltage circuits. Follow the service precautions (see page 12-3).

(cont'd)

System Description (cont'd)

Junction board
The junction board, mounted on the battery module, distributes high voltage energy to the IMA system. The contactors, bypass resistor, the battery current sensor, and the battery module switch are all on the junction board.

'06-08 models

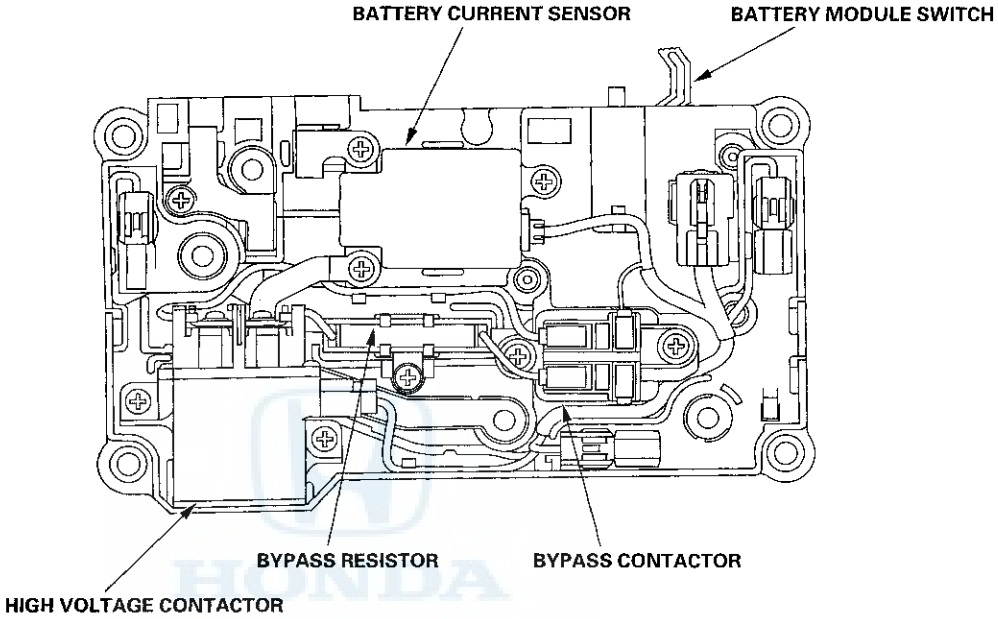

'09 model

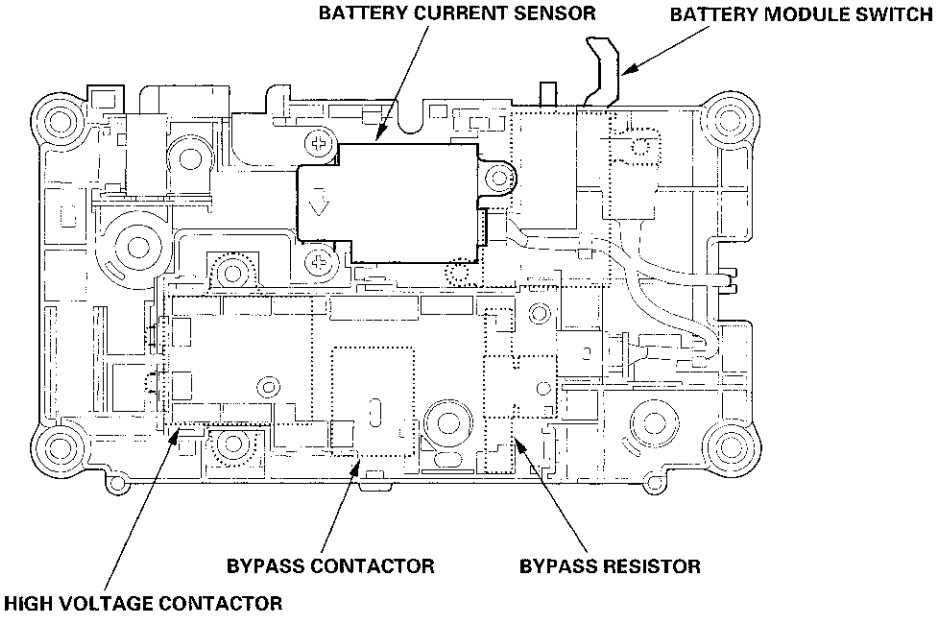

DC-DC Converter
Instead of using an alternator to maintain the 12 V battery, the electrical system uses a DC-DC converter. The converter converts high voltage direct current into low voltage direct current with little energy loss.

If a problem is detected in the 12 V charging system, the DC-DC converter turns on the charging system indicator by sending a signal to the gauge control module (tach) via the BCM module.

The DC-DC converter has a temperature monitoring system that will signal the BCM module if its temperature is abnormally high. If needed, the BCM module can signal the DC-DC converter to shut down.

Heat generated by the DC-DC converter is exhausted to the trunk compartment by the IPU module fan.

The DC-DC converter can also generate PGM-FI and/or IMA DTCs.

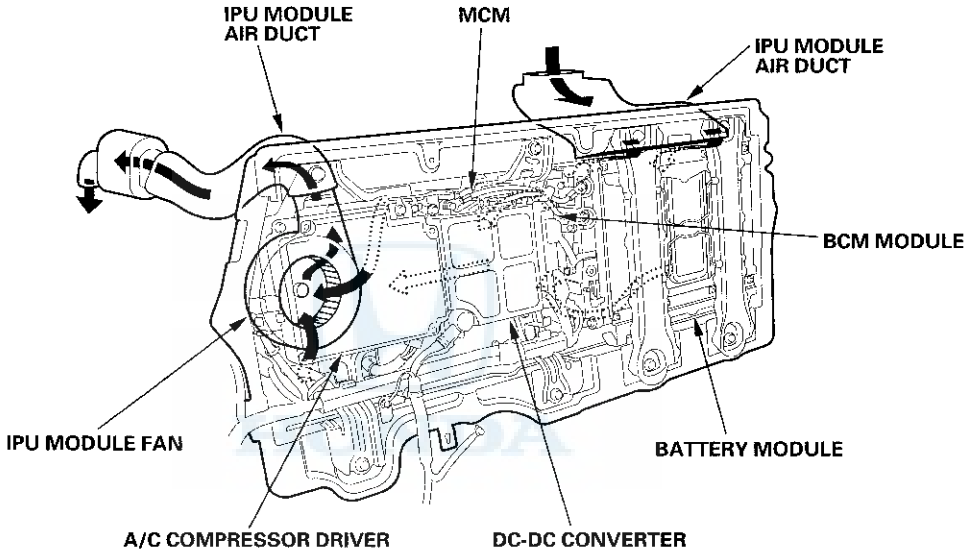

IPU Module Fan
The battery module, the MCM, the A/C compressor driver, and the DC-DC converter generate heat during assist/regeneration. The IPU is equipped with a fan to cool these parts down, assure proper battery performance, and protect the system. The fan has a control circuit and a rotation sensor that are controlled by the BCM module. The cooling air is drawn into the battery module from the top of the rear tray, then it is exhausted into the trunk compartment and outside the vehicle through the MCM heat sink, the DC-DC converter, and the A/C compressor driver heat sink.

(cont'd)

System Description (cont'd)

Power Cables

The IMA motor power cable connects the IMA motor and the motor control module (MCM). The cable feeds through an aluminum tube for damage protection and to prevent electrical noise. The A/C compressor power cable also goes through the aluminum tube. Another aluminum tube, parallel to the IMA motor/A/C compressor tube, houses the DC/DC converter cable. These tubes are connected in one piece with a tube clamp (orange), and attached to the underside of the vehicle.

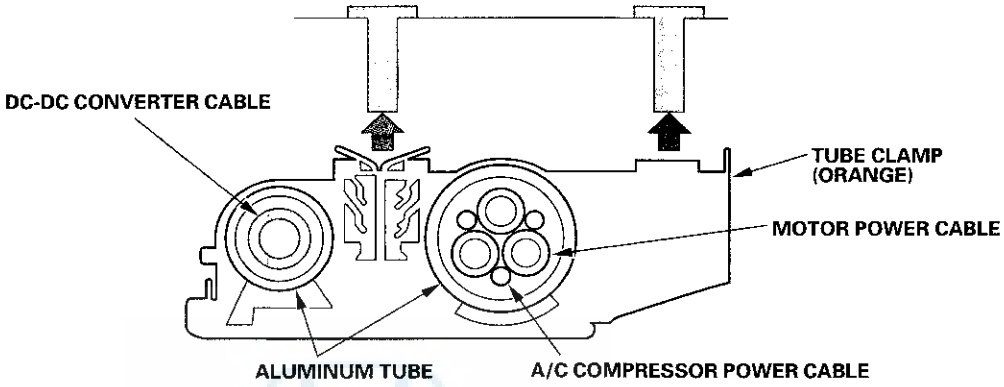

Circuit Diagram

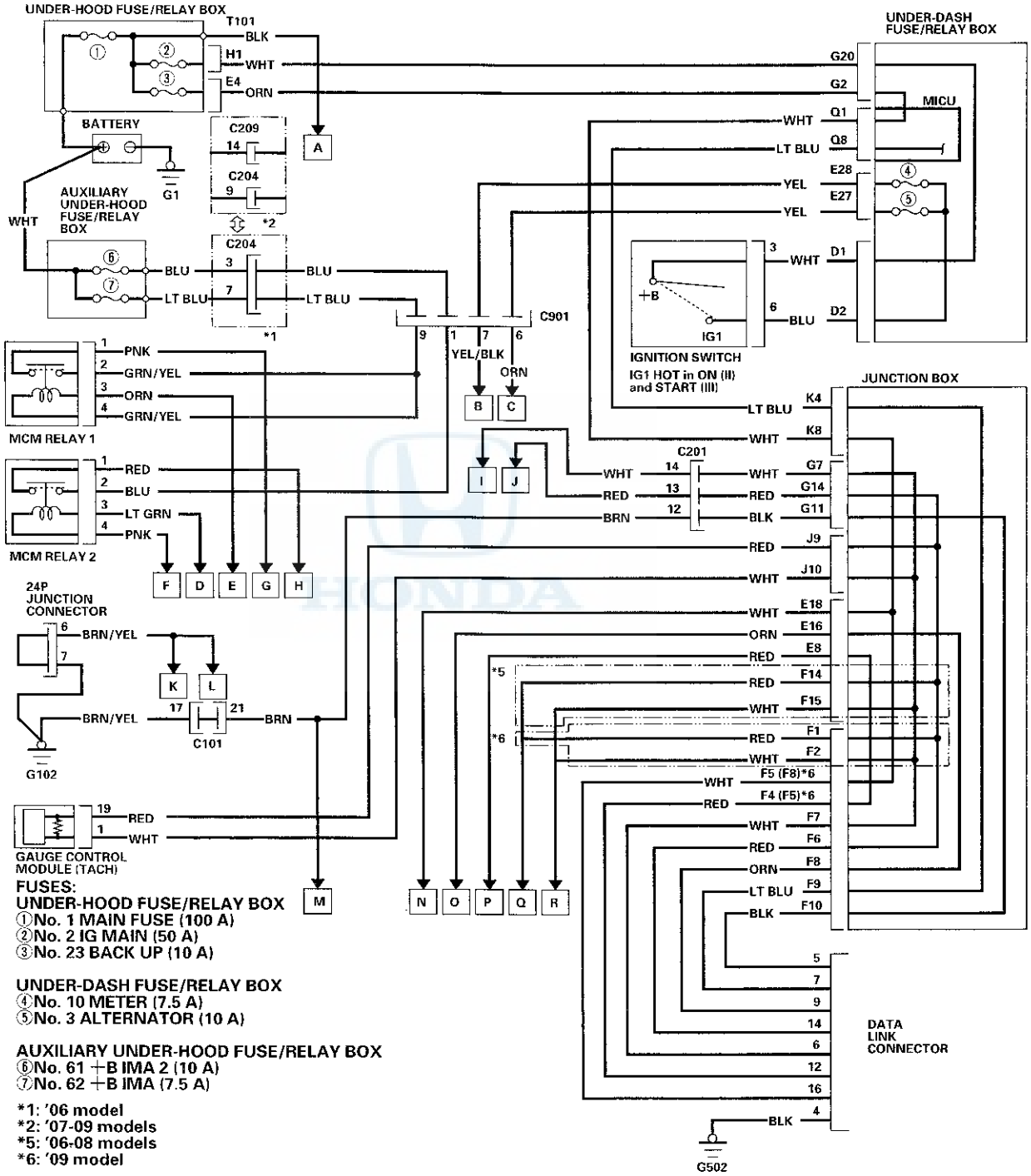

FUSES:

UNDER-HOOD FUSE/RELAY BOX
①No. 1 MAIN FUSE (100 A)
②No. 2 IG MAIN (50 A)
③No. 23 BACK UP (10 A)

UNDER-DASH FUSE/RELAY BOX
④No. 10 METER (7.5 A)
⑤No. 3 ALTERNATOR (10 A)

AUXILIARY UNDER-HOOD FUSE/RELAY BOX
⑥No. 61 +B IMA 2 (10 A)
⑦No. 62 +B IMA (7.5 A)

*1: '06 model
*2: '07-09 models
*5: '06-08 models
*6: '09 model

(cont'd)

Circuit Diagram (cont'd)

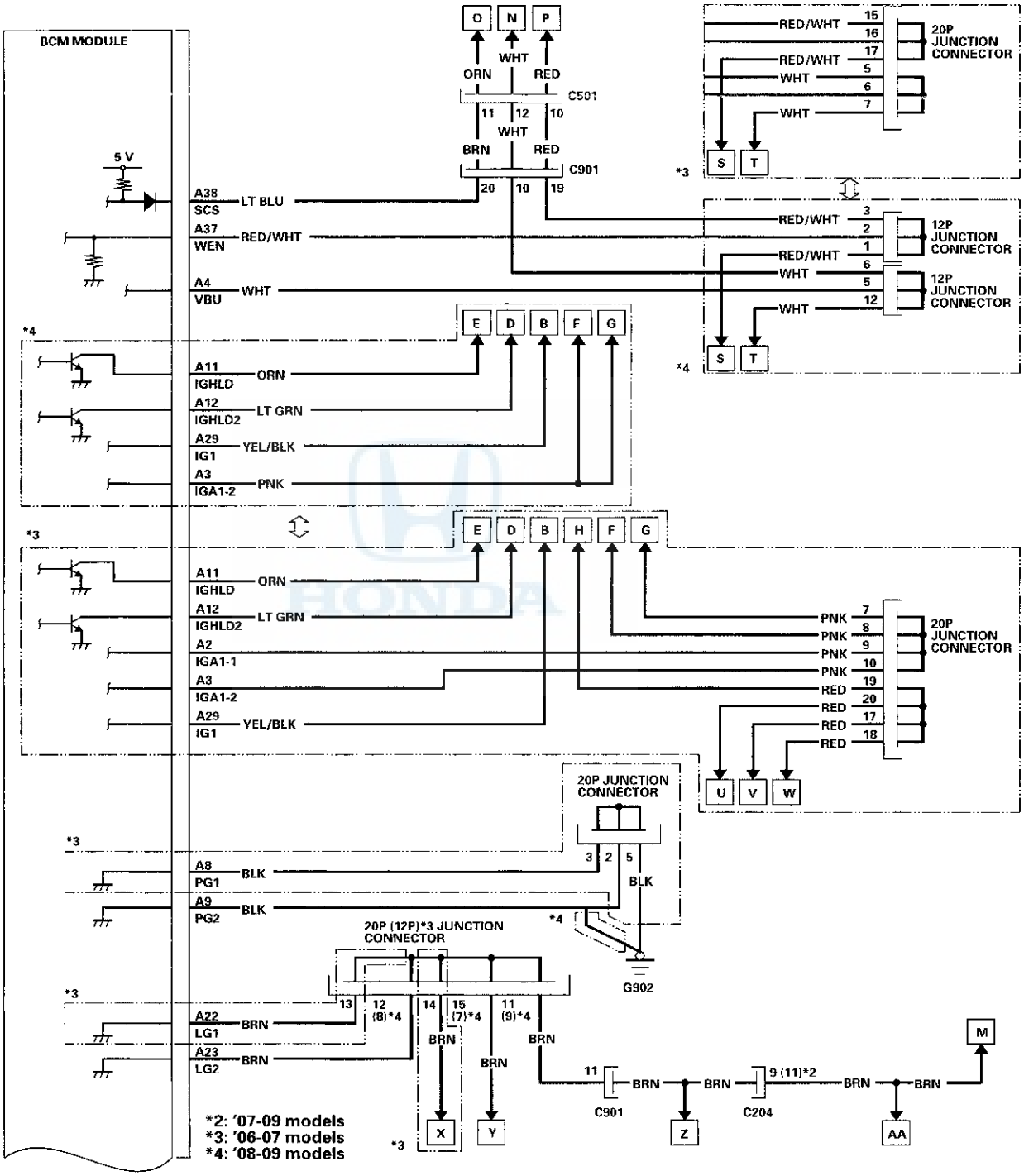

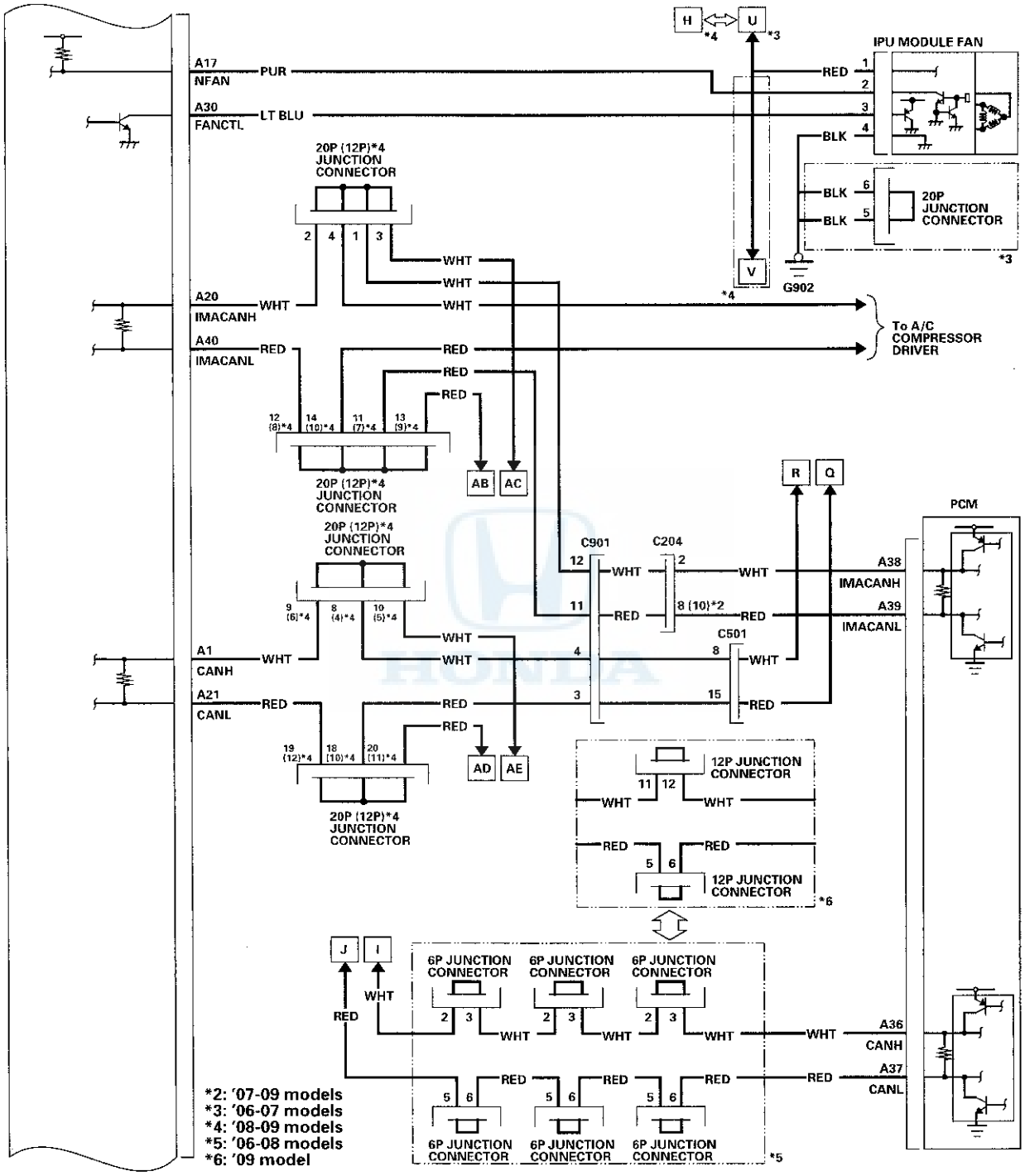
A17
NFAN
PUR
A30
FANCTL
LT BLU
IPU MODULE FAN
RED
BLK
20P JUNCTION CONNECTOR
G902
20P (12P)*4 JUNCTION CONNECTOR
WHT
A20
IMACANH
A40
IMACANL
To A/C COMPRESSOR DRIVER
AB
AC
AD
AE
C901
C204
C501
PCM
A38
IMACANH
A39
IMACANL
A1
CANH
A21
CANL
12P JUNCTION CONNECTOR
6P JUNCTION CONNECTOR
A36
CANH
A37
CANL
*2: '07-09 models
*3: '06-07 models
*4: '08-09 models
*5: '06-08 models
*6: '09 model

(cont'd)

Circuit Diagram (cont'd)

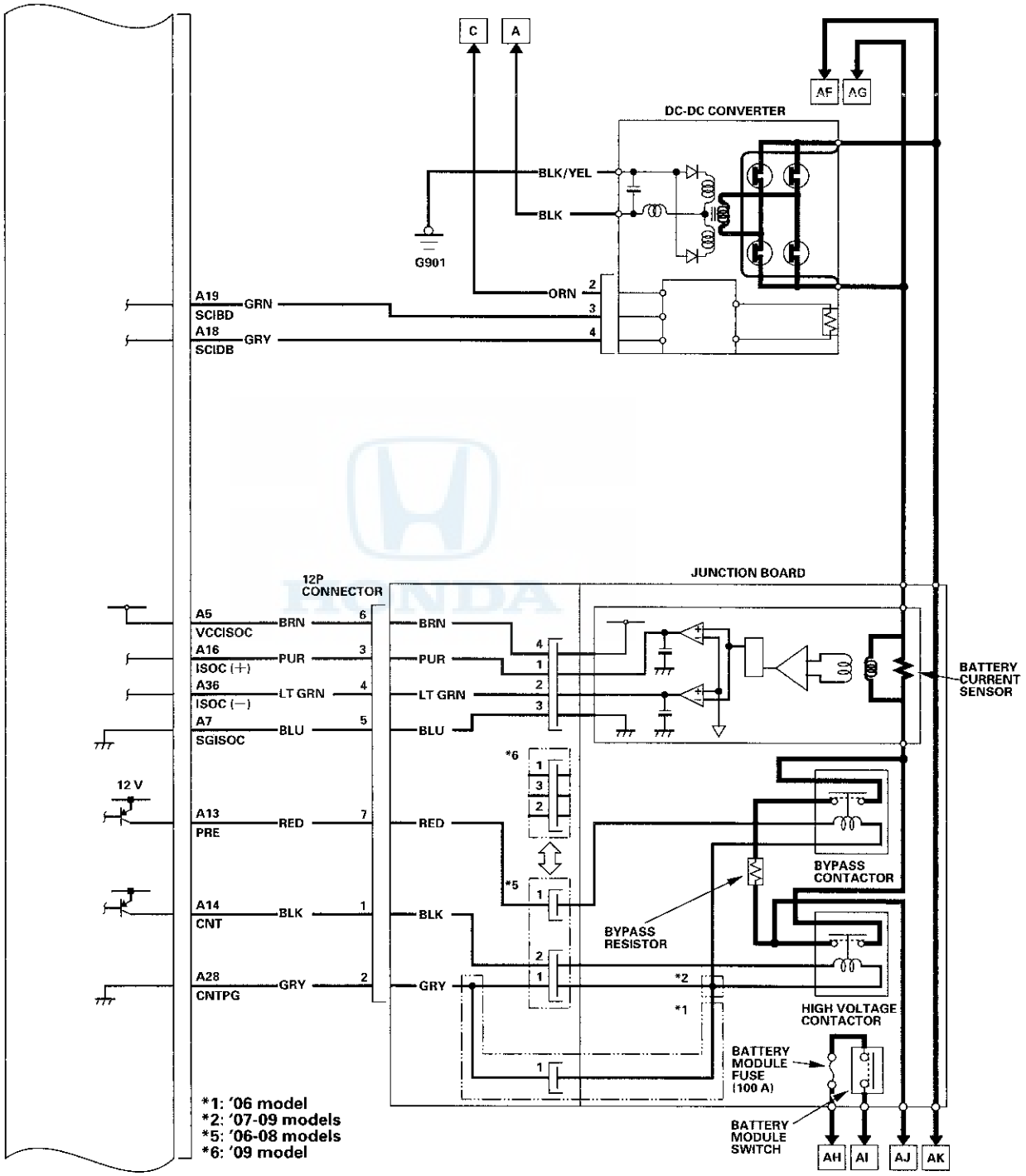

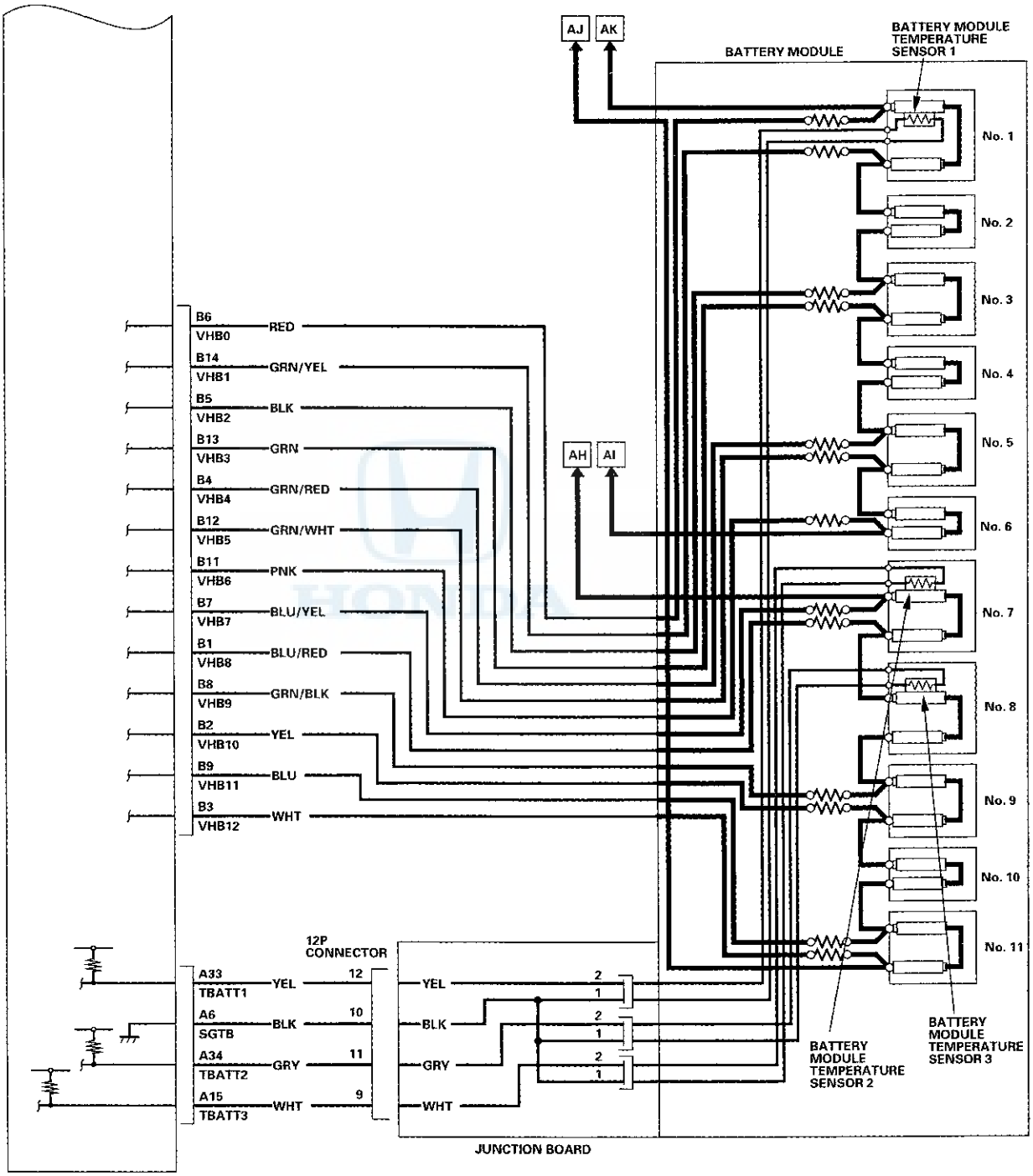
AJ
AK
BATTERY MODULE
BATTERY MODULE TEMPERATURE SENSOR 1
No. 1
No. 2
No. 3
No. 4
No. 5
No. 6
No. 7
No. 8
No. 9
No. 10
No. 11
AH
AI
B6
VHB0
RED
B14
VHB1
GRN/YEL
B5
VHB2
BLK
B13
VHB3
GRN
B4
VHB4
GRN/RED
B12
VHB5
GRN/WHT
B11
VHB6
PNK
B7
VHB7
BLU/YEL
B1
VHB8
BLU/RED
B8
VHB9
GRN/BLK
B2
VHB10
YEL
B9
VHB11
BLU
B3
VHB12
WHT
12P CONNECTOR
A33
TBATT1
YEL
12
A6
SGTB
BLK
10
A34
TBATT2
GRY
11
A15
TBATT3
WHT
9
YEL
BLK
GRY
WHT
2
1
BATTERY MODULE TEMPERATURE SENSOR 2
BATTERY MODULE TEMPERATURE SENSOR 3
JUNCTION BOARD

(cont'd)

Circuit Diagram (cont'd)

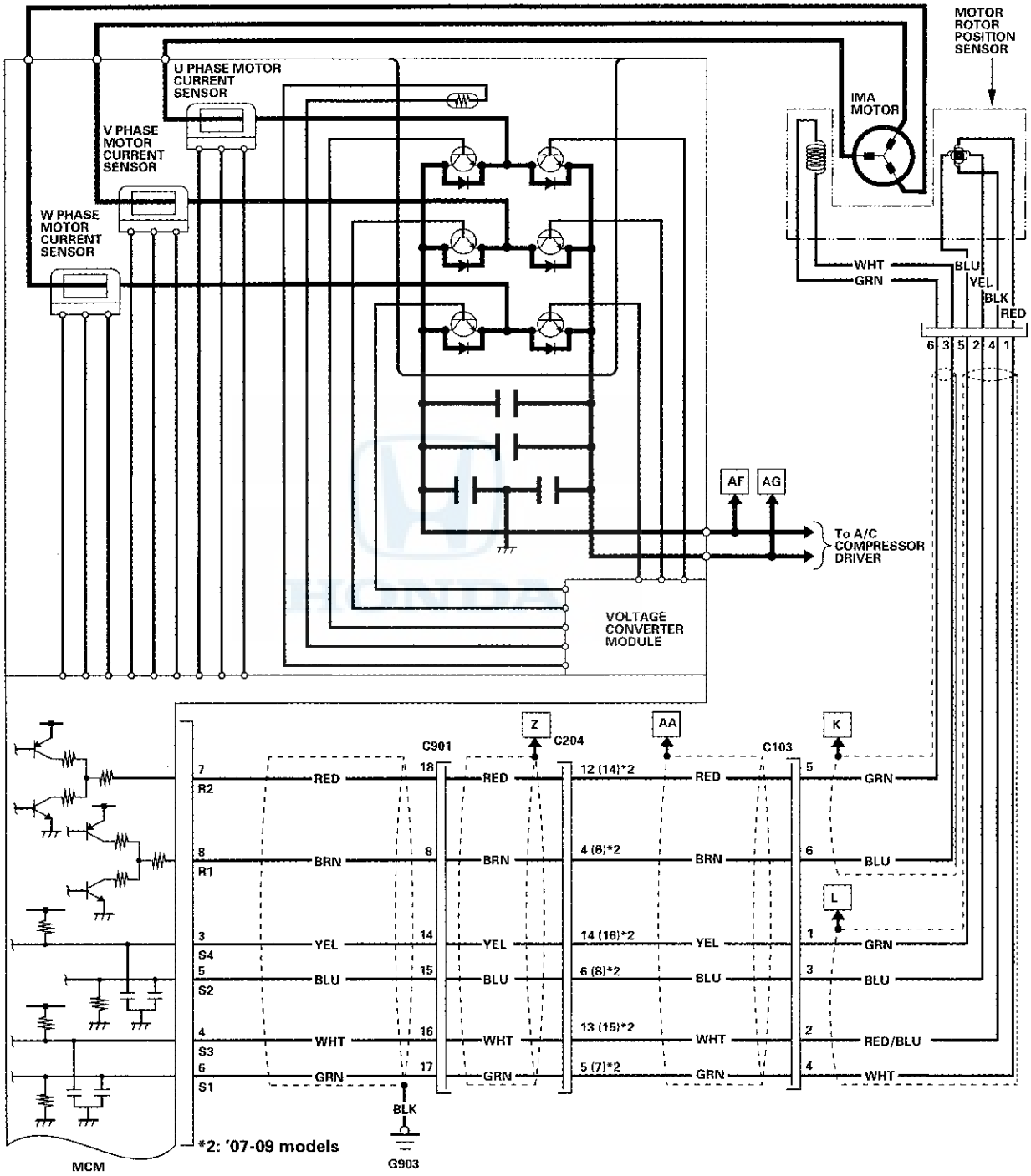

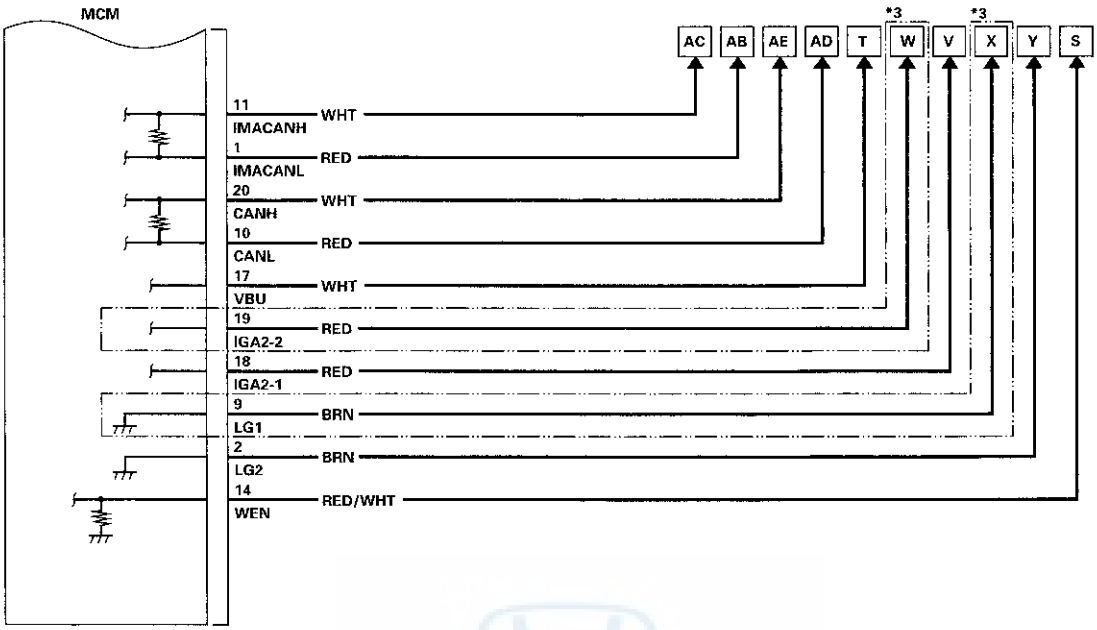

*3: '06-07 models

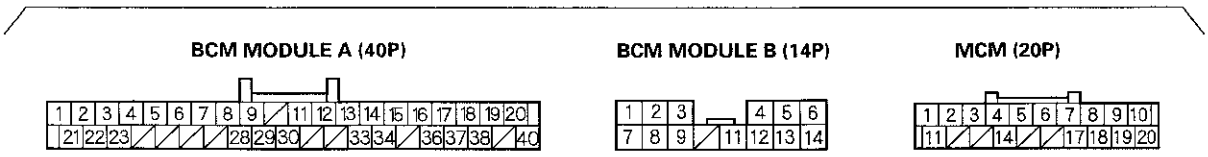

TERMINAL LOCATIONS

Component Location Index

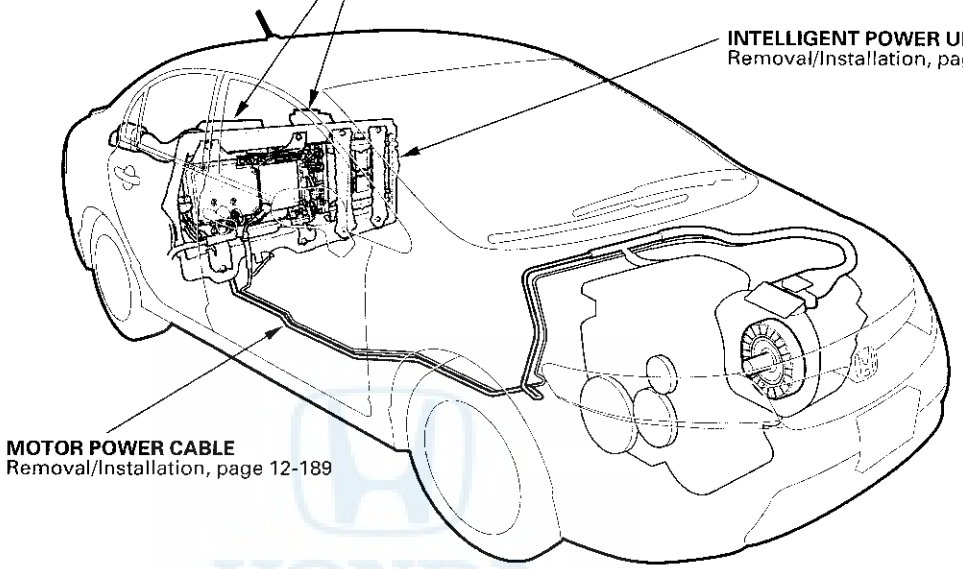

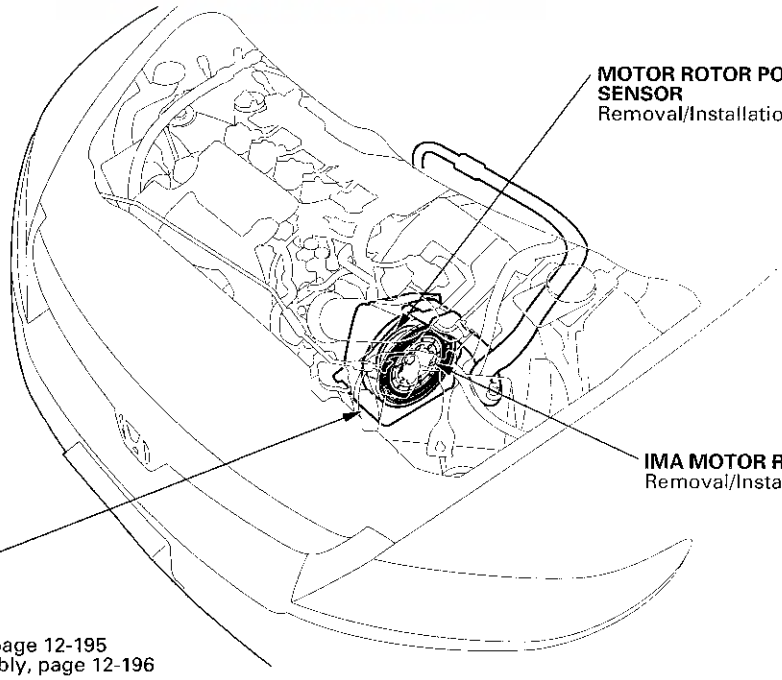

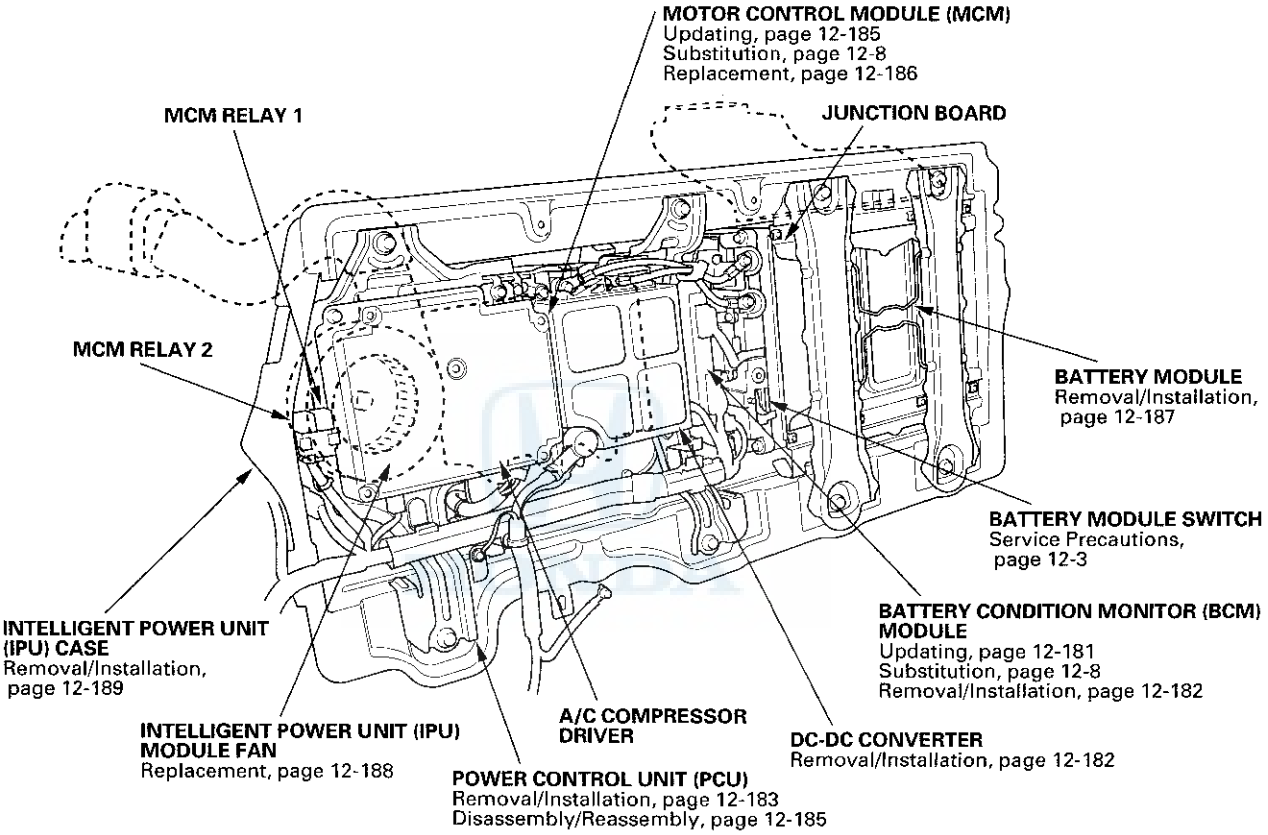
MOTOR CONTROL MODULE (MCM)
Updating, page 12-185
Substitution, page 12-8
Replacement, page 12-186
MCM RELAY 1
JUNCTION BOARD
MCM RELAY 2
BATTERY MODULE
Removal/Installation, page 12-187
BATTERY MODULE SWITCH
Service Precautions, page 12-3
BATTERY CONDITION MONITOR (BCM) MODULE
Updating, page 12-181
Substitution, page 12-8
Removal/Installation, page 12-182
INTELLIGENT POWER UNIT (IPU) CASE
Removal/Installation, page 12-189
INTELLIGENT POWER UNIT (IPU) MODULE FAN
Replacement, page 12-188
A/C COMPRESSOR DRIVER
DC-DC CONVERTER
Removal/Installation, page 12-182
POWER CONTROL UNIT (PCU)
Removal/Installation, page 12-183
Disassembly/Reassembly, page 12-185

(cont'd)

Component Location Index (cont'd)

'06-08 models

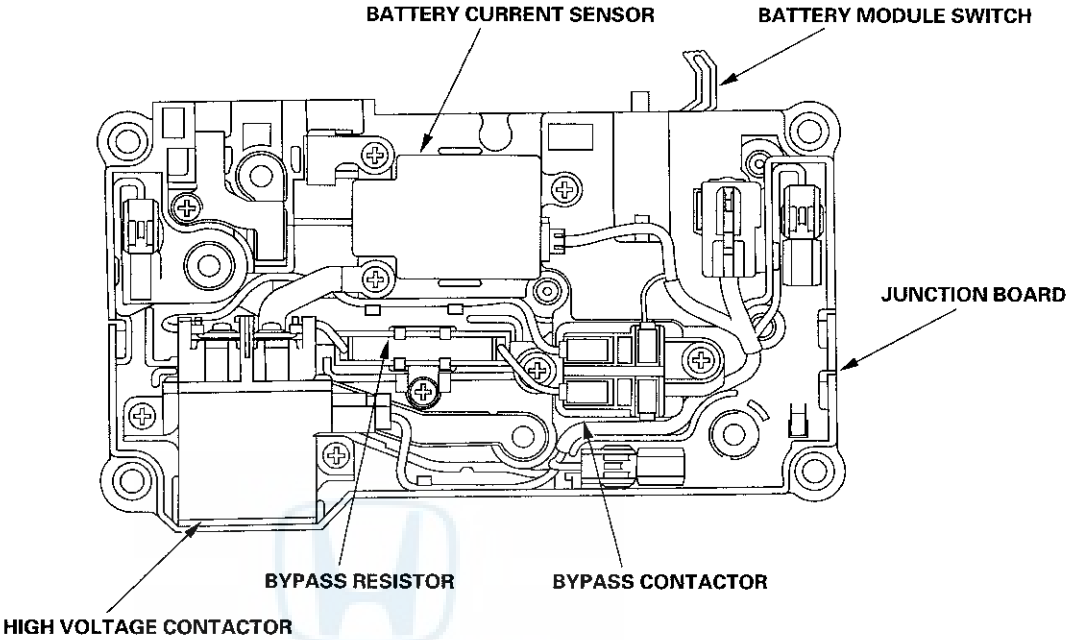

'09 model

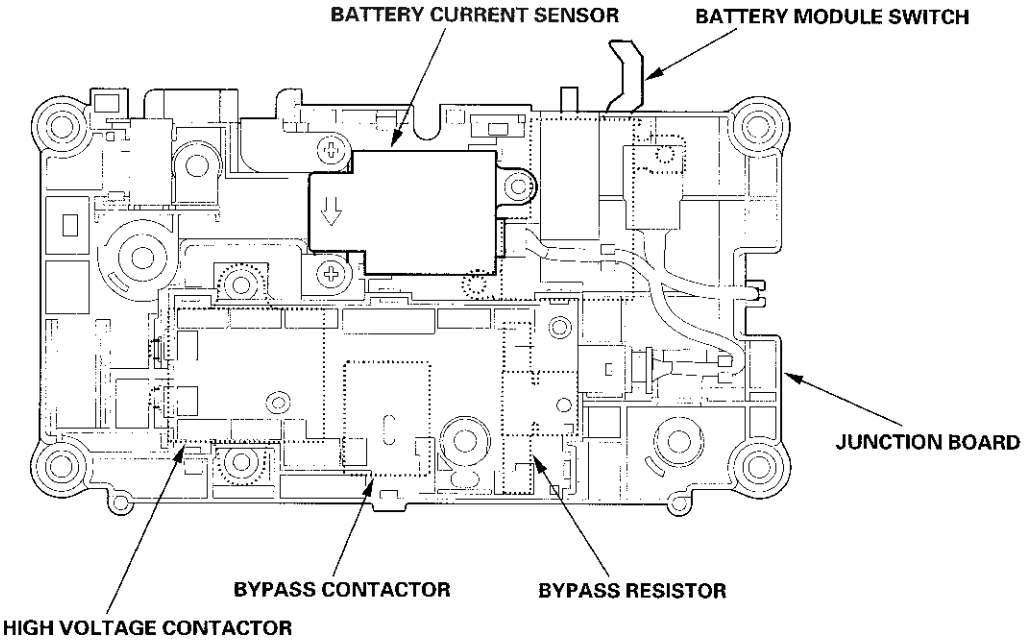

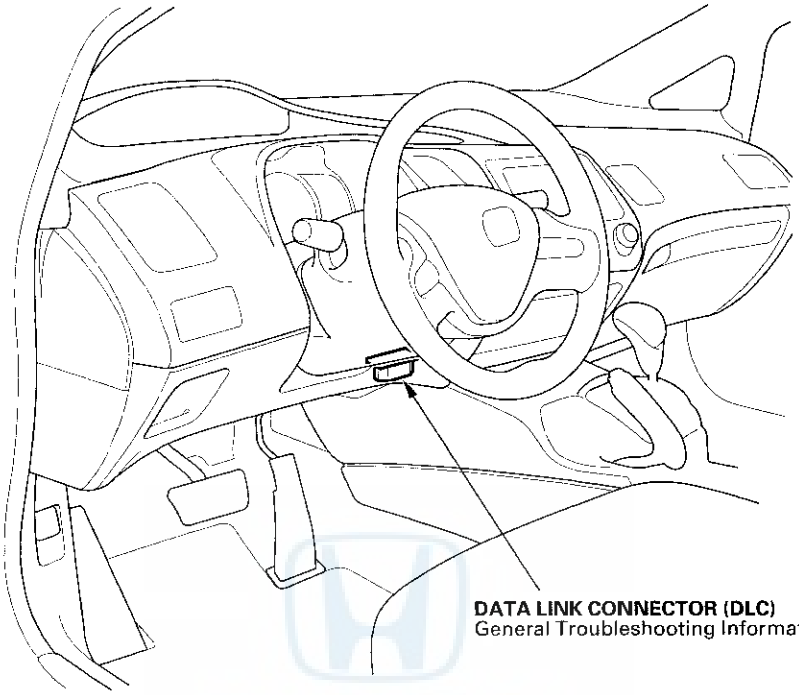

DATA LINK CONNECTOR (DLC)
General Troubleshooting Information, page 12-5

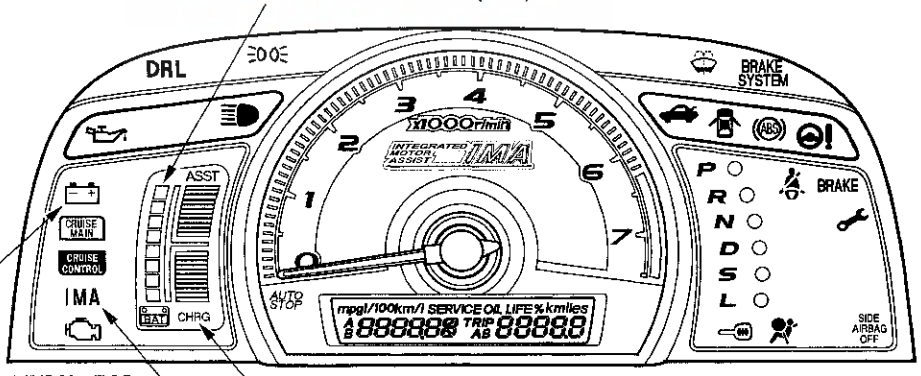

CHARGING SYSTEM INDICATOR
Circuit Troubleshooting, page 12-179

CHARGE/ASSIST GAUGE

IMA SYSTEM INDICATOR
Circuit Troubleshooting, page 12-176

DTC Troubleshooting

DTC P0562 (15): BCM Module System Low Voltage

NOTE:
- To verify this is the appropriate troubleshooting procedure, jump the SCS with the HDS and read the flash code, or change the HDS setup to show HM codes and read the HM code.
- Before you troubleshoot, record all freeze data, and review the general troubleshooting information (see page 12-5).

1. Inspect the No. 23 BACK UP (10 A) fuse in the under-hood fuse/relay box.

   Is the fuse OK?

   YES—Go to step 2.

   NO—Go to step 9.

2. Turn the ignition switch to ON (II).

3. Check the BCM BACK UP VOLTAGE in the DATA LIST with the HDS.

   Is there less than 4.0 V?

   YES—Go to step 4.

   NO—Intermittent failure, the system is OK at this time. Check for poor connections or loose terminals at the No. 23 BACK UP (10 A) fuse and the BCM module. ■

4. Turn the ignition switch to LOCK (0).

5. Turn the battery module switch OFF (see page 12-4).

6. Remove the IPU lid (see page 12-180).

7. Disconnect BCM module connector A (40P).

8. Measure the voltage between body ground and BCM module connector terminal A4.

BCM MODULE CONNECTOR A (40P)

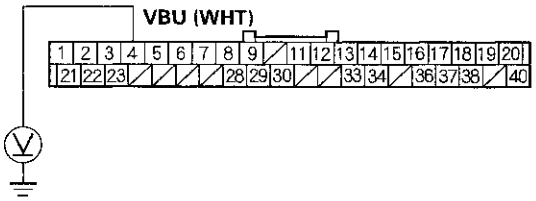

Wire side of female terminals

   Is there 12 V battery voltage?

   YES—Go to step 19.

   NO—Repair open in the wire between the No. 23 BACK UP (10 A) fuse and the BCM module (A4), then go to step 13.

9. Turn the battery module switch OFF (see page 12-4).

10. Remove the IPU lid (see page 12-180).

11. Disconnect BCM module connector A (40P).

12. Check for continuity between body ground and BCM module connector terminal A4.

BCM MODULE CONNECTOR A (40P)

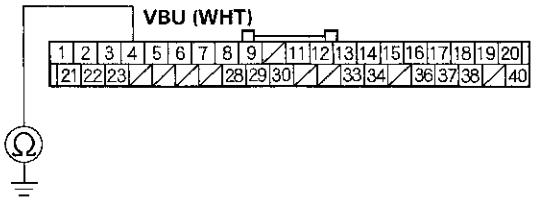

Wire side of female terminals

Is there continuity?

YES—Repair short in the wire between the No. 23 BACK UP (10 A) fuse and the BCM module (A4), and replace the No. 23 BACK UP (10 A) fuse. Then go to step 13.

NO—Go to step 20.

13. Reconnect all connectors.

14. Reinstall the IPU lid (see page 12-180), then turn the battery module switch ON (see page 12-4).

15. Turn the ignition switch to ON (II).

16. Clear the DTC with the HDS (see page 12-6).

17. Check for Temporary DTCs or DTCs with the HDS.

Is DTC P0562 (15) indicated?

YES—Check for poor connections or loose terminals at the No. 23 BACK UP (10 A) fuse and the BCM module, then go to step 1.

NO—Go to step 18.

18. Monitor the OBD STATUS for DTC P0562 (15) in the DTCs MENU with the HDS.

Does the screen indicate PASSED?

YES—Troubleshooting is complete. If any other Temporary DTCs or DTCs were indicated in step 17, go to the indicated DTC's troubleshooting.■

NO—If the screen indicates FAILED, check for poor connections or loose terminals at the No. 23 BACK UP (10 A) fuse and the BCM module, then go to step 1. If the screen indicates NOT COMPLETED, keep the ignition switch ON (II) until a result comes on.

19. Turn the ignition switch to LOCK (0).

20. Reconnect all connectors.

21. Reinstall the IPU lid (see page 12-180), then turn the battery module switch ON (see page 12-4).

22. Update the BCM module if it does not have the latest software (see page 12-181), or substitute a known-good BCM module (see page 12-8).

23. Check for Temporary DTCs or DTCs with the HDS.

Is DTC P0562 (15) indicated?

YES—Check for poor connections or loose terminals at the No. 23 BACK UP (10 A) fuse and the BCM module. If the BCM module was updated, substitute a known-good BCM module (see page 12-8), then recheck. If the BCM module was substituted, go to step 1.■

NO—Go to step 24.

(cont'd)

DTC Troubleshooting (cont'd)

24. Monitor the OBD STATUS for DTC P0562 (15) in the DTCs MENU with the HDS.

    Does the screen indicate PASSED?

    YES—If the BCM module was updated, troubleshooting is complete. If the BCM module was substituted, replace the original BCM module (see page 12-182). If any other Temporary DTCs or DTCs were indicated in step 23, go to the indicated DTC's troubleshooting. ■

    NO—If the screen indicates FAILED, check for poor connections or loose terminals at the No. 23 BACK UP (10 A) fuse and the BCM module. If the BCM module was updated, substitute a known-good BCM module (see page 12-8), then recheck. If the BCM module was substituted, go to step 1. If the screen indicates NOT COMPLETED, keep the ignition switch ON (II) until a result comes on.

DTC P0562 (94): MCM System Low Voltage

NOTE:
- To verify this is the appropriate troubleshooting procedure, jump the SCS with the HDS and read the flash code, or change the HDS setup to show HM codes and read the HM code.
- Before you troubleshoot, record all freeze data, and review the general troubleshooting information (see page 12-5).

1. Inspect the No. 23 BACK UP (10 A) fuse in the under-hood fuse/relay box.

   Is the fuse OK?

   YES—Go to step 2.

   NO—Go to step 9.

2. Turn the ignition switch to ON (II).

3. Check the MCM BACK UP VOLTAGE in the DATA LIST with the HDS.

   Is there less than 4.0 V?

   YES—Go to step 4.

   NO—Intermittent failure, the system is OK at this time. Check for poor connections or loose terminals at the No. 23 BACK UP (10 A) fuse and the MCM. ■

4. Turn the ignition switch to LOCK (0).

5. Turn the battery module switch OFF (see page 12-4).

6. Remove the IPU lid (see page 12-180).

7. Disconnect the MCM 20P connector.

8. Measure the voltage between body ground and MCM 20P connector terminal No. 17.

MCM 20P CONNECTOR

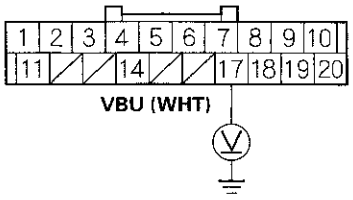

Wire side of female terminals

Is there 12 V battery voltage?

YES—Go to step 19.

NO—Repair open in the wire between the No. 23 BACK UP (10 A) fuse and the MCM (No. 17), then go to step 13.

9. Turn the battery module switch OFF (see page 12-4).

10. Remove the IPU lid (see page 12-180).

11. Disconnect the MCM 20P connector.

12. Check for continuity between body ground and MCM 20P connector terminal No. 17.

MCM 20P CONNECTOR

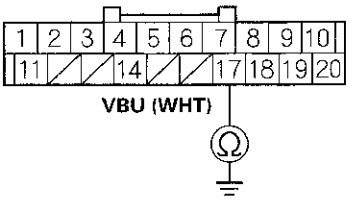

Wire side of female terminals

Is there continuity?

YES—Repair short in the wire between the No. 23 BACK UP (10 A) fuse and the MCM (No. 17) and replace the No. 23 BACK UP (10 A) fuse. Then go to step 13.

NO—Go to step 20.

13. Reconnect all connectors.

14. Reinstall the IPU lid (see page 12-180), then turn the battery module switch ON (see page 12-4).

15. Turn the ignition switch to ON (II).

16. Clear the DTC with the HDS (see page 12-6).

17. Check for Temporary DTCs or DTCs with the HDS.

Is DTC P0562 (94) indicated?

YES—Check for poor connections or loose terminals at the No. 23 BACK UP (10 A) fuse and the MCM, then go to step 1.

NO—Go to step 18.

(cont'd)

DTC Troubleshooting (cont'd)

18. Monitor the OBD STATUS for DTC P0562 (94) in the DTCs MENU with the HDS.

    Does the screen indicate PASSED?

    YES—Troubleshooting is complete. If any other Temporary DTCs or DTCs were indicated in step 17, go to the indicated DTC's troubleshooting.■

    NO—If the screen indicates FAILED, check for poor connections or loose terminals at the No. 23 BACK UP (10 A) fuse and the MCM, then go to step 1. If the screen indicates NOT COMPLETED, keep the ignition switch ON (II) until a result comes on.

19. Turn the ignition switch to LOCK (0).

20. Reconnect all connectors.

21. Reinstall the IPU lid (see page 12-180), then turn the battery module switch ON (see page 12-4).

22. Update the MCM if it does not have the latest software (see page 12-185), or substitute a known-good MCM (see page 12-8).

23. Check for Temporary DTCs or DTCs with the HDS.

    Is DTC P0562 (94) indicated?

    YES—Check for poor connections or loose terminals at the No. 23 BACK UP (10 A) fuse and the MCM. If the MCM was updated, substitute a known-good MCM (see page 12-8), then recheck. If the MCM was substituted, go to step 1.■

    NO—Go to step 24.

24. Monitor the OBD STATUS for DTC P0562 (94) in the DTCs MENU with the HDS.

    Does the screen indicate PASSED?

    YES—If the MCM was updated, troubleshooting is complete. If the MCM was substituted, replace the original MCM (see page 12-186). If any other Temporary DTCs or DTCs were indicated in step 23, go to the indicated DTC's troubleshooting.■

    NO—If the screen indicates FAILED, check for poor connections or loose terminals at the No. 23 BACK UP (10 A) fuse and the MCM. If the MCM was updated, substitute a known-good MCM (see page 12-8), then recheck. If the MCM was substituted, go to step 1. If the screen indicates NOT COMPLETED, keep the ignition switch ON (II) until a result comes on.

DTC P0602 (91): MCM Programming Error

NOTE:
- To verify this is the appropriate troubleshooting procedure, jump the SCS with the HDS and read the flash code, or change the HDS setup to show HM codes and read the HM code.
- Before you troubleshoot, record all freeze data, and review the general troubleshooting information (see page 12-5).
- Do not turn the ignition switch to ACC (I) or to LOCK (0) while updating the MCM. If you do, the MCM can be damaged.

1. Do the MCM update procedure (see page 12-185).

2. Check for IMA system Temporary DTCs or DTCs with the HDS.

   Is DTC P0602 (91) indicated?

   YES—Replace the original MCM (see page 12-186), then go to step 1.

   NO—The update is complete. If any other Temporary DTCs or DTCs are indicated, go to the indicated DTC's troubleshooting.■

DTC P0602 (92): BCM Module Programming Error

NOTE:
- To verify this is the appropriate troubleshooting procedure, jump the SCS with the HDS and read the flash code, or change the HDS setup to show HM codes and read the HM code.
- Before you troubleshoot, record all freeze data, and review the general troubleshooting information (see page 12-5).
- Do not turn the ignition switch to ACC (I) or to LOCK (0) while updating the BCM module. If you do, the BCM module can be damaged.

1. Do the BCM module update procedure (see page 12-181).

2. Check for IMA system Temporary DTCs or DTCs with the HDS.

   Is DTC P0602 (92) indicated?

   YES—Replace the original BCM module (see page 12-182), then go to step 1.

   NO—The update is complete. If any other Temporary DTCs or DTCs are indicated, go to the indicated DTC's troubleshooting.■

HONDA

DTC Troubleshooting (cont'd)

DTC P0603 (60): MCM Internal Circuit KAM Error

NOTE: Before you troubleshoot, record all freeze data, and review the general troubleshooting information (see page 12-5).

1. Turn the ignition switch to ON (II).

2. Check for Temporary DTCs or DTCs with the HDS.

   Is DTC P1629 (79) indicated?

   YES—Do the troubleshooting for DTC P1629 (79) (see page 12-134).

   NO—Go to step 3.

3. Clear the DTC with the HDS (see page 12-6).

4. Monitor the OBD STATUS for DTC P0603 (60) in the DTCs MENU with the HDS.

   Does the screen indicate FAILED?

   YES—Go to step 5.

   NO—If the screen indicates PASSED, intermittent failure, the system is OK at this time. Check for poor connections or loose terminals at the MCM. If the screen indicates NOT COMPLETED, keep the ignition switch ON (II) until a result comes on.

5. Update the MCM if it does not have the latest software (see page 12-185), or substitute a known-good MCM (see page 12-8).

6. Check for Temporary DTCs or DTCs with the HDS.

   Is DTC P0603 (60) indicated?

   YES—Check for poor connections or loose terminals at the MCM. If the MCM was updated, substitute a known-good MCM (see page 12-8), then recheck. If the MCM was substituted, go to step 1.

   NO—Go to step 7.

7. Monitor the OBD STATUS for DTC P0603 (60) in the DTCs MENU with the HDS.

   Does the screen indicate PASSED?

   YES—If the MCM was updated, troubleshooting is complete. If the MCM was substituted, replace the original MCM (see page 12-186). If any other Temporary DTCs or DTCs were indicated in step 6, go to the indicated DTC's troubleshooting. ■

   NO—If the screen indicates FAILED, check for poor connections or loose terminals at the MCM. If the MCM was updated, substitute a known-good MCM (see page 12-8), then recheck. If the MCM was substituted, go to step 1. If the screen indicates NOT COMPLETED, keep the ignition switch ON (II) until a result comes on.

DTC P0607 (82): BCM Module Performance Problem

NOTE: Before you troubleshoot, record all freeze data, and review the general troubleshooting information (see page 12-5).

1. Turn the ignition switch to ON (II).

2. Check for Temporary DTCs or DTCs with the HDS.

   Is DTC P1629 (79) indicated?

   YES—Do the troubleshooting for DTC P1629 (79) (see page 12-134).

   NO—Go to step 3.

3. Clear the DTC with the HDS (see page 12-6).

4. Monitor the OBD STATUS for DTC P0607 (82) in the DTCs MENU with the HDS.

   Does the screen indicate FAILED?

   YES—Go to step 5.

   NO—If the screen indicates PASSED, intermittent failure, the system is OK at this time. Check for poor connections or loose terminals at the BCM module. If the screen indicates NOT COMPLETED, keep the ignition switch ON (II) until a result comes on.

5. Update the BCM module if it does not have the latest software (see page 12-181), or substitute a known-good BCM module (see page 12-8).

6. Check for Temporary DTCs or DTCs with the HDS.

   Is DTC P0607 (82) indicated?

   YES—Check for poor connections or loose terminals at the BCM module. If the BCM module was updated, substitute a known-good BCM module (see page 12-8), then recheck. If the BCM module was substituted, go to step 1.

   NO—Go to step 7.

7. Monitor the OBD STATUS for DTC P0607 (82) in the DTCs MENU with the HDS.

   Does the screen indicate PASSED?

   YES—If the BCM module was updated, troubleshooting is complete. If the BCM module was substituted, replace the original BCM module (see page 12-182). If any other Temporary DTCs or DTCs were indicated in step 6, go to the indicated DTC's troubleshooting. ■

   NO—If the screen indicates FAILED, check for poor connections or loose terminals at the BCM module. If the BCM module was updated, substitute a known-good BCM module (see page 12-8), then recheck. If the BCM module was substituted, go to step 1. If the screen indicates NOT COMPLETED, keep the ignition switch ON (II) until a result comes on.

DTC Troubleshooting (cont'd)

DTC P0A1F (112): F-CAN Malfunction (BCM Module-MCM)

NOTE: Before you troubleshoot, record all freeze data, and review the general troubleshooting information (see page 12-5).

1. Turn the ignition switch to ON (II).
2. Check for Temporary DTCs or DTCs with the HDS.

   Is DTC U0037 (98) indicated?

   YES—Do the troubleshooting for DTC U0037 (98) (see page 12-142).

   NO—Go to step 3.
3. Clear the DTC with the HDS (see page 12-6).
4. Check for Temporary DTCs or DTCs with the HDS.

   Is DTC P0A1F (112) indicated?

   YES—Go to step 5.

   NO—Intermittent failure, the system is OK at this time. Check for poor connections or loose terminals at the BCM module and the MCM. ■
5. Turn the ignition switch to LOCK (0).
6. Turn the battery module switch OFF (see page 12-4).
7. Remove the IPU lid (see page 12-180).
8. Remove the BCM module (see page 12-182).
9. Disconnect the MCM 20P connector.
10. Check for continuity between BCM module connector terminal A1 and MCM 20P connector terminal No. 20, between BCM module connector terminal A21 and MCM 20P connector terminal No. 10, between BCM module connector terminal A20 and MCM 20P connector terminal No. 11, and between BCM module connector terminal A40 and MCM 20P connector terminal No. 1.

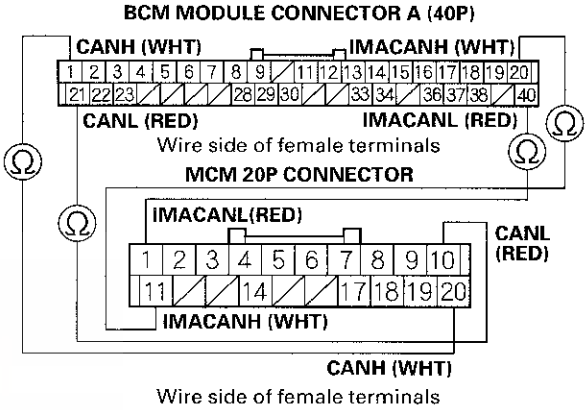

Is there continuity?

YES—Go to step 17.

NO—Repair open in the wire between the BCM module (A1, A21, A20, A40) and the MCM (No. 10, No. 20, No. 11, No. 1), then go to step 11.

11. Reconnect all connectors.

12. Reinstall the IPU lid (see page 12-180), then turn the battery module switch ON (see page 12-4).

13. Turn the ignition switch to ON (II).

14. Clear the DTC with the HDS (see page 12-6).

15. Check for Temporary DTCs or DTCs with the HDS.

    Is DTC P0A1F (112) indicated?

    YES—Check for poor connections or loose terminals at the BCM module and the MCM, then go to step 1.

    NO—Go to step 16.

16. Monitor the OBD STATUS for DTC P0A1F (112) in the DTCs MENU with the HDS.

    Does the screen indicate PASSED?

    YES—Troubleshooting is complete. If any other Temporary DTCs or DTCs were indicated in step 15, go to the indicated DTC's troubleshooting.■

    NO—If the screen indicates FAILED, check for poor connections or loose terminals at the BCM module and the MCM, then go to step 1. If the screen indicates NOT COMPLETED, keep the ignition switch ON (II) until a result comes on.

17. Reconnect all connectors.

18. Reinstall the IPU lid (see page 12-180), then turn the battery module switch ON (see page 12-4).

19. Update the BCM module if it does not have the latest software (see page 12-181), or substitute a known-good BCM module (see page 12-8).

20. Check for Temporary DTCs or DTCs with the HDS.

    Is DTC P0607 (82) indicated?

    YES—Check for poor connections or loose terminals at the BCM module and the MCM. If the BCM module was updated, substitute a known-good BCM module (see page 12-8), then recheck. If the BCM module was substituted, go to step 1.

    NO—Go to step 21.

21. Monitor the OBD STATUS for DTC P0A1F (112) in the DTCs MENU with the HDS.

    Does the screen indicate PASSED?

    YES—If the BCM module was updated, troubleshooting is complete. If the BCM module was substituted, replace the original BCM module (see page 12-182). If any other Temporary DTCs or DTCs were indicated in step 20, go to the indicated DTC's troubleshooting.■

    NO—If the screen indicates FAILED, check for poor connections or loose terminals at the BCM module and the MCM. If the BCM module was updated, substitute a known-good BCM module (see page 12-8), then recheck. If the BCM module was substituted, go to step 1. If the screen indicates NOT COMPLETED, keep the ignition switch ON (II) until a result comes on.

DTC Troubleshooting (cont'd)

DTC P0A27 (46): High Voltage Contactor/ Bypass Contactor Stays Activated

NOTE: Before you troubleshoot, record all freeze data, and review the general troubleshooting information (see page 12-5).

1. Turn the ignition switch to LOCK (0), and wait 30 seconds.

2. Turn the ignition switch to ON (II).

3. Monitor the OBD STATUS for DTC P0A27 (46) in the DTCs MENU with the HDS.

   Does the screen indicate FAILED?

   YES—Go to step 4.

   NO—If the screen indicates PASSED, intermittent failure, the system is OK at this time. Check for poor connections or loose terminals at the high voltage contactor, the bypass contactor, the MCM, and the BCM module. If the screen indicates NOT COMPLETED, go to step 1.

4. Turn the ignition switch to LOCK (0).

5. Turn the battery module switch OFF (see page 12-4).

6. Remove the IPU lid (see page 12-180).

7. Turn the ignition switch to ON (II), and then turn to LOCK (0). Wait 1 minute, then measure the voltage between body ground and BCM module connector terminals A13 and A14 individually.

BCM MODULE CONNECTOR A (40P)

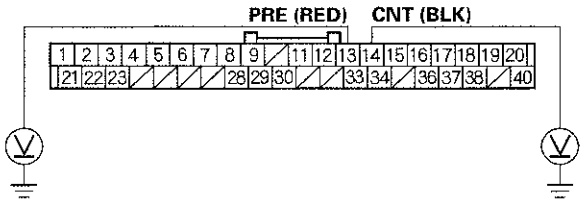

Wire side of female terminals

Is there 12 V battery voltage on either terminal?

YES—Go to step 19.

NO—Go to step 8.

8. Remove the battery module (see page 12-187).

9. Measure the resistance between high voltage contactor terminals (A) and (B).

'06-08 models

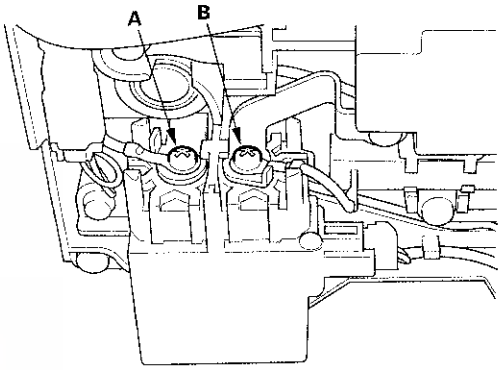

'09 model

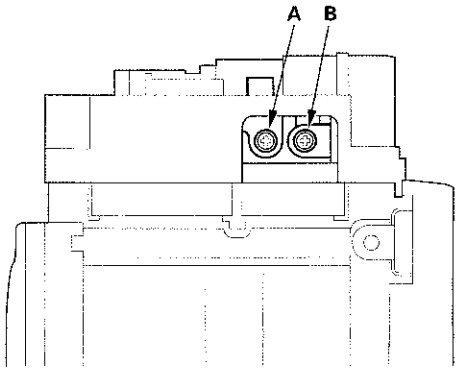

Is there about 0 Ω ?

YES—Replace the battery module (see page 12-187), then go to step 11.

NO—Go to step 10.

10. Measure the resistance between high voltage contactor terminals (A) and (B).

'06-08 models

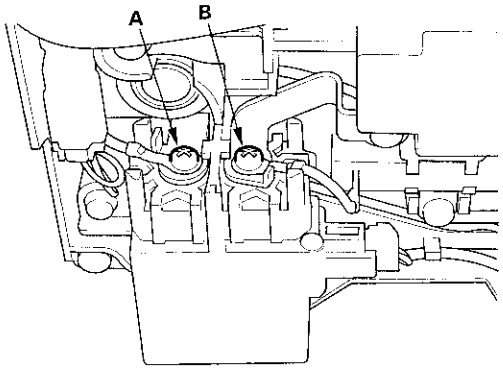

'09 model

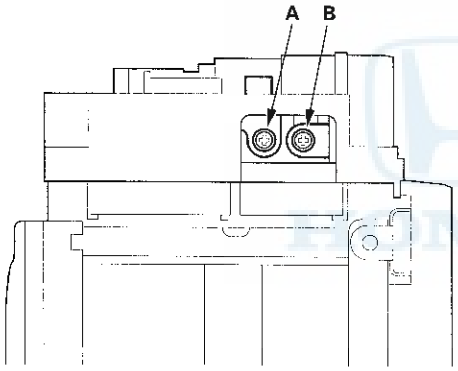

Is there 38 – 42 Ω ?

YES—Replace the battery module (see page 12-187), then go to step 11.

NO—Go to step 27.

11. Reconnect all connectors.

12. Reinstall the IPU lid (see page 12-180), and turn the battery module switch ON (see page 12-4).

13. Turn the ignition switch to ON (II).

14. Clear the DTC with the HDS (see page 12-6).

15. Turn the ignition switch to LOCK (0), and wait 30 seconds.

16. Turn the ignition switch to ON (II).

17. Check for Temporary DTCs or DTCs with the HDS.

    Is DTC P0A27 (46) indicated?

    YES—Check for poor connections or loose terminals at the high voltage contactor, the bypass contactor, the MCM, and the BCM module, then go to step 1.

    NO—Go to step 18.

18. Monitor the OBD STATUS for DTC P0A27 (46) in the DTCs MENU with the HDS.

    Does the screen indicate PASSED?

    YES—Troubleshooting is complete. If any other Temporary DTCs or DTCs were indicated in step 17, go to the indicated DTC's troubleshooting. ■

    NO—If the screen indicates FAILED, check for poor connections or loose terminals at the high voltage contactor, the bypass contactor, the MCM, and the BCM module, then go to step 1. If the screen indicates NOT COMPLETED, go to step 15.

(cont'd)

DTC Troubleshooting (cont'd)

19. Turn the ignition switch to LOCK (0).

20. Reinstall the IPU lid (see page 12-180), then turn the battery module switch ON (see page 12-4).

21. Update the BCM module if it does not have the latest software (see page 12-181), or substitute a known-good BCM module (see page 12-8).

22. Clear the DTC with the HDS (see page 12-6).

23. Turn the ignition switch to LOCK (0), and wait 30 seconds.

24. Turn the ignition switch to ON (II).

25. Check for Temporary DTCs or DTCs with the HDS.

    Is DTC P0A27 (46) indicated?

    YES—Check for poor connections or loose terminals at the high voltage contactor, the bypass contactor, the MCM, and the BCM module. If the BCM module was updated, substitute a known-good BCM module (see page 12-8), then go to step 23. If the BCM module was substituted, go to step 1.

    NO—Go to step 26.

26. Monitor the OBD STATUS for DTC P0A27 (46) in the DTCs MENU with the HDS.

    Does the screen indicate PASSED?

    YES—If the BCM module was updated, troubleshooting is complete. If the BCM module was substituted, replace the original BCM module (see page 12-182). If any other Temporary DTCs or DTCs were indicated in step 25, go to the indicated DTC's troubleshooting. ■

    NO—If the screen indicates FAILED, check for poor connections or loose terminals at the high voltage contactor, the bypass contactor, the MCM, and the BCM module, then go to step 1. If the screen indicates NOT COMPLETED, go to step 23.

27. Reinstall the IPU lid (see page 12-180), then turn the battery module switch ON (see page 12-4).

28. Update the MCM if it does not have the latest software (see page 12-185), or substitute a known-good MCM (see page 12-8).

29. Clear the DTC with the HDS (see page 12-6).

30. Turn the ignition switch to LOCK (0), and wait 30 seconds.

31. Turn the ignition switch to ON (II).

32. Check for Temporary DTCs or DTCs with the HDS.

    Is DTC P0A27 (46) indicated?

    YES—Check for poor connections or loose terminals at the high voltage contactor, the bypass contactor, the MCM, and the BCM module. If the MCM was updated, substitute a known-good MCM (see page 12-8), then go to step 30. If the MCM was substituted, go to step 1.

    NO—Go to step 33.

33. Monitor the OBD STATUS for DTC P0A27 (46) in the DTCs MENU with the HDS.

    Does the screen indicate PASSED?

    YES—If the MCM was updated, troubleshooting is complete. If the MCM was substituted, replace the original MCM (see page 12-186). If any other Temporary DTCs or DTCs were indicated in step 32, go to the indicated DTC's troubleshooting. ■

    NO—If the screen indicates FAILED, check for poor connections or loose terminals at the high voltage contactor, the bypass contactor, the MCM, and the BCM module, then go to step 1. If the screen indicates NOT COMPLETED, go to step 30.

DTC P0A3C (39): MCM Overheating

NOTE:
- Before you troubleshoot, record all freeze data, and review the general troubleshooting information (see page 12-5).
- If the IPU module fan duct is blocked, DTC P0A3C may be detected.

1. Turn the ignition switch to ON (II).

2. Clear the DTC with the HDS.

3. Check for Temporary DTCs or DTCs with the HDS.

   Is DTC P1448 (63) indicated?

   YES—Do the troubleshooting for DTC P1448 (63) (see page 12-110).

   NO—Go to step 4.

4. Check the MPI TEMPERATURE in the DATA LIST with the HDS.

   Is more than 212 °F (100 °C) indicated?

   YES—Go to step 7.

   NO—Go to step 5.

5. Test-drive the vehicle for several minutes in the range of these recorded freeze data parameters:

   - IPU MODULE FAN SPEED
   - VSS (MCM)
   - Motor Speed (MCM)

6. Check the MPI TEMPERATURE in the DATA LIST with the HDS.

   Is more than 212 °F (100 °C) indicated?

   YES—Go to step 7.

   NO—Intermittent failure, the system is OK at this time. Check for a blockage at the IPU module fan inlet duct.■

7. Check the IPU module air duct or IPU module fan for disconnections, damage, or obstructions, and check the IPU lid installation.

   Are the IPU module air duct, the IPU module fan, and the IPU lid OK?

   YES—Go to step 12.

   NO—Repair the Part(s) as needed, then go to step 8.

8. Turn the ignition switch to ON (II).

9. Clear the DTC with the HDS.

10. Check for Temporary DTCs or DTCs with the HDS.

    Is DTC P0A3C (39) indicated?

    YES—Check for poor connections or loose terminals at the MCM and the IPU module fan, then go to step 1.

    NO—Go to step 11.

11. Monitor the OBD STATUS for DTC P0A3C (39) in the DTCs MENU with the HDS.

    Does the screen indicate PASSED?

    YES—Troubleshooting is complete. If any other Temporary DTCs or DTCs were indicated in step 10, go to the indicated DTC's troubleshooting.■

    NO—If the screen indicates FAILED, check for poor connections or loose terminals at the MCM and the IPU module fan. If the screen indicates NOT COMPLETED, keep the ignition switch ON (II) until a result comes on.

(cont'd)

DTC Troubleshooting (cont'd)

12. Update the MCM if it does not have the latest software (see page 12-185), or substitute a known-good MCM (see page 12-8).

13. Check for Temporary DTCs or DTCs with the HDS.

    Is DTC P0A3C (39) indicated?

    YES—Check for poor connections or loose terminals at the MCM and the IPU module fan. If the MCM was updated, substitute a known-good MCM (see page 12-8), then recheck. If the MCM was substituted, go to step 1.

    NO—Go to step 14.

14. Monitor the OBD STATUS for DTC P0A3C (39) in the DTCs MENU with the HDS.

    Does the screen indicate PASSED?

    YES—If the MCM was updated, troubleshooting is complete. If the MCM was substituted, replace the original MCM (see page 12-186). If any other Temporary DTCs or DTCs were indicated in step 13, go to the indicated DTC's troubleshooting. ■

    NO—If the screen indicates FAILED, check for poor connections or loose terminals at the MCM and the IPU module fan. If the MCM was updated, substituted a known-good MCM (see page 12-8), then recheck. If the MCM was substituted, go to step 1. If the screen indicates NOT COMPLETED, keep the ignition switch ON (II) until a result comes on.

DTC P0A3F (89): Motor Rotor Position Sensor Circuit Malfunction

NOTE: Before you troubleshoot, record all freeze data, and review the general troubleshooting information (see page 12-5).

1. Turn the ignition switch to ON (II).

2. Start the engine, and wait 30 seconds.

3. Monitor the OBD STATUS for DTC P0A3F (89) in the DTCs MENU with the HDS.

   Does the screen indicate FAILED?

   YES—Go to step 4.

   NO—If the screen indicates PASSED, intermittent failure, the system is OK at this time. Check for poor connections or loose terminals at the motor rotor position sensor and the MCM. If the screen indicates NOT COMPLETED, go to step 1.

4. Turn the ignition switch to LOCK (0).

5. Turn the battery module switch OFF (see page 12-4).

6. Remove the IPU lid (see page 12-180).

7. Remove the BCM module (see page 12-182).

8. Disconnect the MCM 20P connector.

9. Check for continuity between body ground and these MCM 20P connector terminals individually:

   - No. 3
   - No. 4
   - No. 5
   - No. 6
   - No. 7
   - No. 8

MCM 20P CONNECTOR

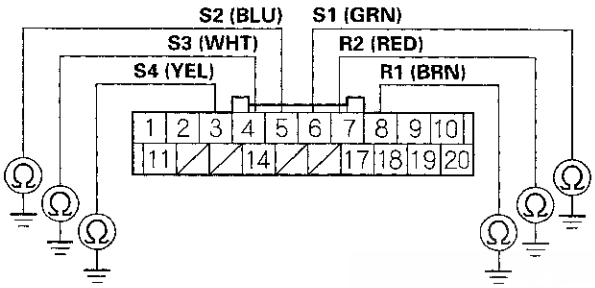

Wire side of female terminals

Is there continuity?

YES—Go to step 10.

NO—Go to step 12.

10. Disconnect the motor rotor position sensor 6P connector.

11. At the motor rotor position sensor side, check for continuity between body ground and the motor rotor position sensor 6P connector terminals individually.

MOTOR ROTOR POSITION SENSOR 6P CONNECTOR

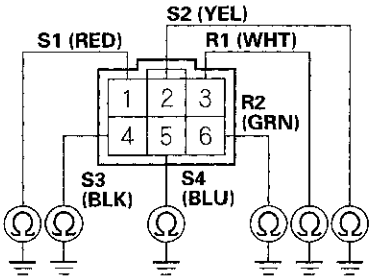

Terminal side of male terminals

Is there continuity?

YES—Replace the motor rotor position sensor (see page 12-196), then go to step 15.

NO—Repair short to ground in the wire between the motor rotor position sensor and the MCM, then go to step 15.

(cont'd)

DTC Troubleshooting (cont'd)

12. Measure the resistance between these MCM 20P connector terminals individually:

    - No. 4 and No. 6
    - No. 3 and No. 5
    - No. 7 and No. 8

MCM 20P CONNECTOR

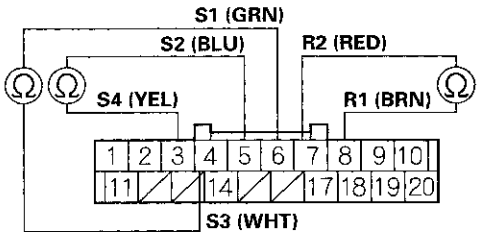

Wire side of female terminals

Is there 21.6– 34.4 Ω (No. 4 and No. 6), 19.9– 31.7 Ω (No. 3 and No. 5), and 11.0– 17.4 Ω (No. 7 and No. 8)?

YES—Go to step 24.

NO—Go to step 13.

13. Disconnect the motor rotor position sensor 6P connector.

14. Measure the resistance between these motor rotor position sensor 6P connector terminals individually:

    - No. 1 and No. 4
    - No. 2 and No. 5
    - No. 3 and No. 6

MOTOR ROTOR POSITION SENSOR 6P CONNECTOR

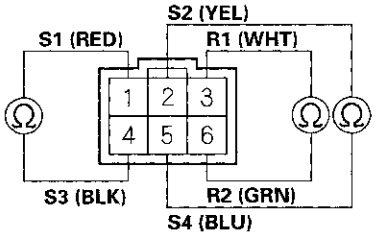

Terminal side of male terminals

Is there 21.4– 34.2 Ω (No. 1 and No. 4), 19.7– 31.5 Ω (No. 2 and No. 5), and 10.8– 17.2 Ω (No. 3 and No. 6)?

YES—Repair open in the wire between the motor rotor position sensor and the MCM, the go to step 15.

NO—Replace the motor rotor position sensor (see page 12-196), then go to step 15.

15. Reconnect all connectors.

16. Reinstall the IPU lid (see page 12-180), then turn the battery module switch ON (see page 12-4).

17. Turn the ignition switch to ON (II).

18. Clear the DTC with the HDS (see page 12-6).

19. Start the engine.

20. Check for Temporary DTCs or DTCs with the HDS.

    Is DTC P0A3F (89) indicated?

    YES—Check for poor connections or loose terminals at the motor rotor position sensor and the MCM, then go to step 1.

    NO—Go to step 21.

21. Monitor the OBD STATUS for DTC P0A3F (89) in the DTCs MENU with the HDS.

    Does the screen indicate PASSED?

    YES—Troubleshooting is complete. If any other Temporary DTCs or DTCs were indicated in step 20, go to the indicated DTC's troubleshooting. ■

    NO—If the screen indicates FAILED, check for poor connections or loose terminals at the motor rotor position sensor and the MCM. If the screen indicates NOT COMPLETED, keep idling until a result comes on.

22. Reconnect all connectors.

23. Reinstall the IPU lid (see page 12-180), then turn the battery module switch ON (see page 12-4).

24. Update the MCM if it does not have the latest software (see page 12-185), or substitute a known-good MCM (see page 12-8).

25. Start the engine.

26. Check for Temporary DTCs or DTCs with the HDS.

    Is DTC P0A3F (89) indicated?

    YES—Check for poor connections or loose terminals at the motor rotor position sensor and the MCM. If the MCM was updated, substitute a known-good MCM (see page 12-8), then go to step 25. If the MCM was substituted, go to step 1.

    NO—Go to step 27.

27. Monitor the OBD STATUS for DTC P0A3F (89) in the DTCs MENU with the HDS.

    Does the screen indicate PASSED?

    YES—If the MCM was updated, troubleshooting is complete. If the MCM was substituted, replace the original MCM (see page 12-182). If any other Temporary DTCs or DTCs were indicated in step 26, go to the indicated DTC's troubleshooting. ■

    NO—If the screen indicates FAILED, check for poor connections or loose terminals at the motor rotor position sensor and the MCM, then go to step 1. If the screen indicates NOT COMPLETED, keep idling until a result comes on.

DTC Troubleshooting (cont'd)

DTC P0A5E (24): U Phase Motor Current Sensor Circuit Low Voltage

NOTE: Before you troubleshoot, record all freeze data, and review the general troubleshooting information (see page 12-5).

1. Turn the ignition switch to ON (II).

2. Check the U PHASE MOTOR CURRENT SENSOR in the DATA LIST with the HDS.

   Is about 0.25 V or less indicated?

   YES—Go to step 3.

   NO—Intermittent failure, the system is OK at this time. Check for poor connections or loose terminals at the MCM.■

3. Update the MCM if it does not have the latest software (see page 12-185), or substitute a known-good MCM (see page 12-8).

4. Check for Temporary DTCs or DTCs with the HDS.

   Is DTC P0A5E (24) indicated?

   YES—Check for poor connections or loose terminals at the MCM. If the MCM was updated, substitute a known-good MCM (see page 12-8), then recheck. If the MCM was substituted, go to step 1.

   NO—Go to step 5.

5. Monitor the OBD STATUS for DTC P0A5E (24) in the DTCs MENU with the HDS.

   Does the screen indicate PASSED?

   YES—If the MCM was updated, troubleshooting is complete. If the MCM was substituted, replace the original MCM (see page 12-186). If any other Temporary DTCs or DTCs were indicated in step 4, go to the indicated DTC's troubleshooting.■

   NO—If the screen indicates FAILED, check for poor connections or loose terminals at the MCM. If the MCM was updated, substitute a known-good MCM (see page 12-8), then recheck. If the MCM was substituted, go to step 1. If the screen indicates NOT COMPLETED, keep the ignition switch ON (II) until a result comes on.

DTC P0A5F (25): U Phase Motor Current Sensor Circuit High Voltage

NOTE: Before you troubleshoot, record all freeze data, and review the general troubleshooting information (see page 12-5).

1. Turn the ignition switch to ON (II).

2. Check the U PHASE MOTOR CURRENT SENSOR in the DATA LIST with the HDS.

   Is about 4.75 V or more indicated?

   YES—Go to step 3.

   NO—Intermittent failure, the system is OK at this time. Check for poor connections or loose terminals at the MCM. ■

3. Update the MCM if it does not have the latest software (see page 12-185), or substitute a known-good MCM (see page 12-8).

4. Check for Temporary DTCs or DTCs with the HDS.

   Is DTC P0A5F (25) indicated?

   YES—Check for poor connections or loose terminals at the MCM. If the MCM was updated, substitute a known-good MCM (see page 12-8), then recheck. If the MCM was substituted, go to step 1.

   NO—Go to step 5.

5. Monitor the OBD STATUS for DTC P0A5F (25) in the DTCs MENU with the HDS.

   Does the screen indicate PASSED?

   YES—If the MCM was updated, troubleshooting is complete. If the MCM was substituted, replace the original MCM (see page 12-186). If any other Temporary DTCs or DTCs were indicated in step 4, go to the indicated DTC's troubleshooting. ■

   NO—If the screen indicates FAILED, check for poor connections or loose terminals at the MCM. If the MCM was updated, substitute a known-good MCM (see page 12-8), then recheck. If the MCM was substituted, go to step 1. If the screen indicates NOT COMPLETED, keep the ignition switch ON (II) until a result comes on.

DTC Troubleshooting (cont'd)

DTC P0A61 (26): V Phase Motor Current Sensor Circuit Low Voltage

NOTE: Before you troubleshoot, record all freeze data, and review the general troubleshooting information (see page 12-5).

1. Turn the ignition switch to ON (II).

2. Check the V PHASE MOTOR CURRENT SENSOR in the DATA LIST with the HDS.

   Is about 0.25 V or less indicated?

   YES—Go to step 3.

   NO—Intermittent failure, the system is OK at this time. Check for poor connections or loose terminals at the MCM. ■

3. Update the MCM if it does not have the latest software (see page 12-185), or substitute a known-good MCM (see page 12-8).

4. Check for Temporary DTCs or DTCs with the HDS.

   Is DTC P0A61 (26) indicated?

   YES—Check for poor connections or loose terminals at the MCM. If the MCM was updated, substitute a known-good MCM (see page 12-8), then recheck. If the MCM was substituted, go to step 1.

   NO—Go to step 5.

5. Monitor the OBD STATUS for DTC P0A61 (26) in the DTCs MENU with the HDS.

   Does the screen indicate PASSED?

   YES—If the MCM was updated, troubleshooting is complete. If the MCM was substituted, replace the original MCM (see page 12-186). If any other Temporary DTCs or DTCs were indicated in step 4, go to the indicated DTC's troubleshooting. ■

   NO—If the screen indicates FAILED, check for poor connections or loose terminals at the MCM. If the MCM was updated, substitute a known-good MCM (see page 12-8), then recheck. If the MCM was substituted, go to step 1. If the screen indicates NOT COMPLETED, keep the ignition switch ON (II) until a result comes on.

DTC P0A62 (27): V Phase Motor Current Sensor Circuit High Voltage

NOTE: Before you troubleshoot, record all freeze data, and review the general troubleshooting information (see page 12-5).

1. Turn the ignition switch to ON (II).

2. Check the V PHASE MOTOR CURRENT SENSOR in the DATA LIST with the HDS.

   Is about 4.75 V or more indicated?

   YES—Go to step 3.

   NO—Intermittent failure, the system is OK at this time. Check for poor connections or loose terminals at the MCM. ■

3. Update the MCM if it does not have the latest software (see page 12-185), or substitute a known-good MCM (see page 12-8).

4. Check for Temporary DTCs or DTCs with the HDS.

   Is DTC P0A62 (27) indicated?

   YES—Check for poor connections or loose terminals at the MCM. If the MCM was updated, substitute a known-good MCM (see page 12-8), then recheck. If the MCM was substituted, go to step 1.

   NO—Go to step 5.

5. Monitor the OBD STATUS for DTC P0A62 (27) in the DTCs MENU with the HDS.

   Does the screen indicate PASSED?

   YES—If the MCM was updated, troubleshooting is complete. If the MCM was substituted, replace the original MCM (see page 12-186). If any other Temporary DTCs or DTCs were indicated in step 4, go to the indicated DTC's troubleshooting. ■

   NO—If the screen indicates FAILED, check for poor connections or loose terminals at the MCM. If the MCM was updated, substitute a known-good MCM (see page 12-8), then recheck. If the MCM was substituted, go to step 1. If the screen indicates NOT COMPLETED, keep the ignition switch ON (II) until a result comes on.

DTC Troubleshooting (cont'd)

DTC P0A64 (28): W Phase Motor Current Sensor Circuit Low Voltage

NOTE: Before you troubleshoot, record all freeze data, and review the general troubleshooting information (see page 12-5).

1. Turn the ignition switch to ON (II).

2. Check the W PHASE MOTOR CURRENT SENSOR in the DATA LIST with the HDS.

   Is about 0.25 V or less indicated?

   YES—Go to step 3.

   NO—Intermittent failure, the system is OK at this time. Check for poor connections or loose terminals at the MCM. ■

3. Update the MCM if it does not have the latest software (see page 12-185), or substitute a known-good MCM (see page 12-8).

4. Check for Temporary DTCs or DTCs with the HDS.

   Is DTC P0A64 (28) indicated?

   YES—Check for poor connections or loose terminals at the MCM. If the MCM was updated, substitute a known-good MCM (see page 12-8), then recheck. If the MCM was substituted, go to step 1.

   NO—Go to step 5.

5. Monitor the OBD STATUS for DTC P0A64 (28) in the DTCs MENU with the HDS.

   Does the screen indicate PASSED?

   YES—If the MCM was updated, troubleshooting is complete. If the MCM was substituted, replace the original MCM (see page 12-186). If any other Temporary DTCs or DTCs were indicated in step 4, go to the indicated DTC's troubleshooting. ■

   NO—If the screen indicates FAILED, check for poor connections or loose terminals at the MCM. If the MCM was updated, substitute a known-good MCM (see page 12-8), then recheck. If the MCM was substituted, go to step 1. If the screen indicates NOT COMPLETED, keep the ignition switch ON (II) until a result comes on.

DTC P0A65 (29): W Phase Motor Current Sensor Circuit High Voltage

NOTE: Before you troubleshoot, record all freeze data, and review the general troubleshooting information (see page 12-5).

1. Turn the ignition switch to ON (II).

2. Check the W PHASE MOTOR CURRENT SENSOR in the DATA LIST with the HDS.

   Is about 4.75 V or more indicated?

   YES—Go to step 3.

   NO—Intermittent failure, the system is OK at this time. Check for poor connections or loose terminals at the MCM.■

3. Update the MCM if it does not have the latest software (see page 12-185), or substitute a known-good MCM (see page 12-8).

4. Check for Temporary DTCs or DTCs with the HDS.

   Is DTC P0A65 (29) indicated?

   YES—Check for poor connections or loose terminals at the MCM. If the MCM was updated, substitute a known-good MCM (see page 12-8), then recheck. If the MCM was substituted, go to step 1.

   NO—Go to step 5.

5. Monitor the OBD STATUS for DTC P0A65 (29) in the DTCs MENU with the HDS.

   Does the screen indicate PASSED?

   YES—If the MCM was updated, troubleshooting is complete. If the MCM was substituted, replace the original MCM (see page 12-186). If any other Temporary DTCs or DTCs were indicated in step 4, go to the indicated DTC's troubleshooting.■

   NO—If the screen indicates FAILED, check for poor connections or loose terminals at the MCM. If the MCM was updated, substitute a known-good MCM (see page 12-8), then recheck. If the MCM was substituted, go to step 1. If the screen indicates NOT COMPLETED, keep the ignition switch ON (II) until a result comes on.

DTC Troubleshooting (cont'd)

DTC P0A78 (32): MCM Internal Circuit Malfunction

NOTE: Before you troubleshoot, record all freeze data, and review the general troubleshooting information (see page 12-5).

1. Turn the ignition switch to ON (II).

2. Check for Temporary DTCs or DTCs with the HDS.

   Is DTC P1437 (41) indicated?

   YES—Do the troubleshooting for DTC P1437 (41) (see page 12-101).

   NO—Go to step 3.

3. Monitor the OBD STATUS for DTC P0A78 (32) in the DTCs MENU with the HDS.

   Does the screen indicate FAILED?

   YES—Go to step 4.

   NO—If the screen indicates PASSED, intermittent failure, the system is OK at this time. Check for poor connections or loose terminals at the MCM. If the screen indicates NOT COMPLETED, go to step 1.■

4. Update the MCM if it does not have the latest software (see page 12-185), or substitute a known-good MCM (see page 12-8).

5. Check for Temporary DTCs or DTCs with the HDS.

   Is DTC P0A78 (32) indicated?

   YES—Check for poor connections or loose terminals at the MCM. If the MCM was updated, substitute a known-good MCM (see page 12-8), then recheck. If the MCM was substituted, go to step 1.

   NO—Go to step 6.

6. Monitor the OBD STATUS for DTC P0A78 (32) in the DTCs MENU with the HDS.

   Does the screen indicate PASSED?

   YES—If the MCM was updated, troubleshooting is complete. If the MCM was substituted, replace the original MCM (see page 12-186). If any other Temporary DTCs or DTCs were indicated in step 5, go to the indicated DTC's troubleshooting.■

   NO—If the screen indicates FAILED, check for poor connections or loose terminals at the MCM. If the MCM was updated, substitute a known-good MCM (see page 12-8), then recheck. If the MCM was substituted, go to step 1. If the screen indicates NOT COMPLETED, keep the ignition switch ON (II) until a result comes on.

DTC P0A7E (72): Battery Module Overheating

NOTE: Before you troubleshoot, record all freeze data, and review the general troubleshooting information (see page 12-5).

Replace the battery module (see page 12-187).

DTC P0A7F (78): Battery Module Deterioration

NOTE: Before you troubleshoot, record all freeze data, and review the general troubleshooting information (see page 12-5).

1. Turn the ignition switch to ON (II).
2. Check for Temporary DTCs or DTCs with the HDS.

   Is DTC P1586 (23) indicated?

   YES—Do the troubleshooting for DTC P1586 (23) (see page 12-122).

   NO—Go to step 3.
3. Clear the DTC with the HDS (see page 12-6).
4. Start the engine.
5. Check the SOC in the DATA LIST with the HDS.
6. Hold the engine speed between 3,500 and 4,000 rpm without load (in P or N) until the SOC increases to 70 %.
7. Check for Temporary DTCs or DTCs with the HDS.

   Is DTC P1586 (23) indicated?

   YES—Do the troubleshooting for DTC P1586 (23) (see page 12-122).

   NO—Replace the battery module (see page 12-187), then go to step 8.
8. Turn the ignition switch to ON (II).
9. Clear the DTC with the HDS (see page 12-6).
10. Check for Temporary DTCs or DTCs with the HDS.

    Is DTC P0A7F (78) indicated?

    YES—Check for poor connections or loose terminals at the battery module, the battery current sensor, and the BCM module, then go to step 1.

    NO—Go to step 11.

(cont'd)

DTC Troubleshooting (cont'd)

11. Monitor the OBD STATUS for DTC P0A7F (78) in the DTCs MENU with the HDS.

    Does the screen indicate PASSED?

    YES—Troubleshooting is complete. If any other Temporary DTCs or DTCs were indicated in step 10, go to the indicated DTC's troubleshooting. ■

    NO—If the screen indicates FAILED, check for poor connections or loose terminals at the battery module, the battery current sensor, and the BCM module, then go to step 1. If the screen indicates NOT COMPLETED, keep the ignition switch ON (II) until a result comes on.

DTC P0A94 (48): DC-DC Converter Output Low Voltage

NOTE: Before you troubleshoot, record all freeze data, and review the general troubleshooting information (see page 12-5).

1. Turn the ignition switch to ON (II).

2. Check for IMA system Temporary DTCs or DTCs with the HDS.

   Is DTC U1221 (35) or P0562 (94) indicated?

   YES—Do the troubleshooting for DTC U1221 (35) (see page 12-172), or DTC P0562 (94) (see page 12-42).

   NO—Go to step 3.

3. Start the engine.

4. Check under these conditions:

   - Headlights on high beam
   - Blower fan at maximum speed
   - Rear window defogger on

5. Let the engine idle for 2 minutes.

6. Monitor the OBD STATUS for DTC P0A94 (48) in the DTCs MENU with the HDS.

   Does the screen indicate FAILED?

   YES—Go to step 7.

   NO—If the screen indicates PASSED, intermittent failure, the system is OK at this time. Check for poor connections or loose terminals at the DC-DC converter, the +B terminal (on the under-hood fuse/relay box), the MCM, and the No. 23 BACK UP (10 A) fuse in the under-hood fuse/relay box. If the screen indicates NOT COMPLETED, go to step 4.

7. Check the DC-DC CONVERTER INFORMATION in the DATA LIST with the HDS.

   Does the screen indicate NORMAL?

   YES—Go to step 8.

   NO—Replace the DC-DC converter (see page 12-182), then go to step 13.

8. Turn the ignition switch to LOCK (0).

9. Check the under-hood fuse/relay box +B terminal (A) (BLK wire) connection.

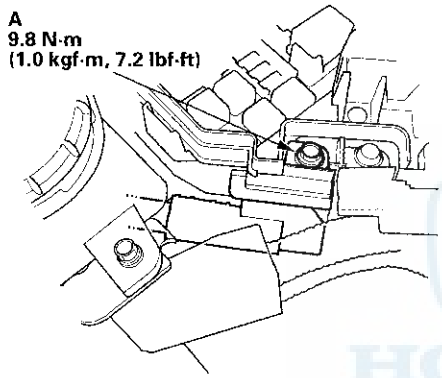

   Is the connection OK?

   YES—Go to step 10.

   NO—Repair the +B terminal connection, then go to step 13.

10. Turn the battery module switch OFF (see page 12-4).

11. Remove the IPU lid (see page 12-180).

12. Check the +B connector (A) and — connector (B) connections on the DC-DC converter.

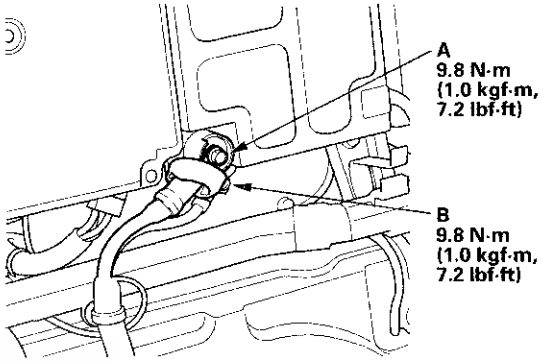

   Are the connections OK?

   YES—Replace the DC-DC converter (see page 12-182), then go to step 13.

   NO—Repair the +B connector, then go to step 13.

13. Reconnect all connectors.

14. Reinstall the IPU lid (see page 12-180), then turn the battery module switch ON (see page 12-4).

15. Turn the ignition switch to ON (II).

16. Clear the DTC with the HDS (see page 12-6).

(cont'd)

DTC Troubleshooting (cont'd)

17. Start the engine.

18. Check under these conditions:

    - Headlights on high beam
    - Blower fan at maximum speed
    - Rear window defogger on

19. Let the engine idle for 2 minutes.

20. Check for Temporary DTCs or DTCs with the HDS.

    Is DTC P0A94 (48) indicated?

    YES—Check for poor connections or loose terminals at the DC-DC converter, the under-hood fuse/relay box, the +B terminal (on the under-hood fuse/relay box), the MCM, and the No. 23 BACK UP (10 A) fuse in the under-hood fuse/relay box, then go to step 1.

    NO—Go to step 21.

21. Monitor the OBD STATUS for DTC P0A94 (48) in the DTCs MENU with the HDS.

    Does the screen indicate PASSED?

    YES—Troubleshooting is complete. If any other Temporary DTCs or DTCs were indicated in step 20, go to the indicated DTC's troubleshooting.■

    NO—If the screen indicates FAILED, check for poor connections or loose terminals at the DC-DC converter, the +B terminal (on the under-hood fuse/relay box), the MCM, and the No. 23 BACK UP (10 A) fuse in the under-hood fuse/relay box, then go to step 1. If the screen indicates NOT COMPLETED, go to step 18.

DTC P0A9D (49): Battery Module Temperature Sensor 1 Circuit Low Voltage

NOTE: Before you troubleshoot, record all freeze data, and review the general troubleshooting information (see page 12-5).

1. Turn the ignition switch to ON (II).

2. Check the IMA BATTERY MODULE TEMPERATURE SENSOR 1 VOLTAGE (IMA BATTERY MODULE TEMPERATURE SENSOR 1) in the DATA LIST with the HDS.

   Is about 0.05 V or less (194 °F (90 °C) or more) indicated?

   YES—Go to step 3.

   NO—Intermittent failure, the system is OK at this time. Check for poor connections, loose terminals, or damaged insulation at the battery module and the BCM module.■

3. Turn the ignition switch to LOCK (0).

4. Turn the battery module switch OFF (see page 12-4).

5. Remove the IPU lid (see page 12-180).

6. Disconnect the junction board 12P connector.

7. Turn the ignition switch to ON (II).

8. Check the IMA BATTERY MODULE TEMPERATURE SENSOR 1 VOLTAGE (IMA BATTERY MODULE TEMPERATURE SENSOR 1) in the DATA LIST with the HDS.

   Is about 0.05 V or less (194 °F (90 °C) or more) indicated?

   YES—Go to step 9.

   NO—Replace the battery module (see page 12-187), then go to step 12.

9. Turn the ignition switch to LOCK (0).

10. Disconnect BCM module connector A (40P).

11. Check for continuity between BCM module connector terminal A33 and body ground.

BCM MODULE CONNECTOR A (40P)

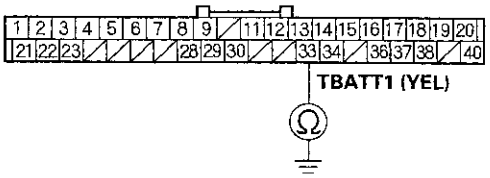

Wire side of female terminals

Is there continuity?

YES—Repair short to ground in the wire between the battery module and the BCM module (A33), then go to step 12.

NO—Go to step 19.

12. Turn the ignition switch to LOCK (0).

13. Reconnect all connectors.

14. Reinstall the IPU lid (see page 12-180), then turn the battery module switch ON (see page 12-4).

15. Turn the ignition switch to ON (II).

16. Clear the DTC with the HDS (see page 12-6).

17. Check for Temporary DTCs or DTCs with the HDS.

Is DTC P0A9D (49) indicated?

YES—Check for poor connections, loose terminals, or damaged insulation at the battery module and the BCM module, then go to step 1.

NO—Go to step 18.

18. Monitor the OBD STATUS for DTC P0A9D (49) in the DTCs MENU with the HDS.

Does the screen indicate PASSED?

YES—Troubleshooting is complete. If any other Temporary DTCs or DTCs were indicated in step 17, go to the indicated DTC's troubleshooting. ■

NO—If the screen indicates FAILED, check for poor connections, loose terminals, or damaged insulation at the battery module and the BCM module, then go to step 1. If the screen indicates NOT COMPLETED, keep the ignition switch ON (II) until a result comes on.

19. Reconnect all connectors.

20. Reinstall the IPU lid (see page 12-180), then turn the battery module switch ON (see page 12-4).

21. Update the BCM module if it does not have the latest software (see page 12-181), or substitute a known-good BCM module (see page 12-8).

22. Check for Temporary DTCs or DTCs with the HDS.

Is DTC P0A9D (49) indicated?

YES—Check for poor connections, loose terminals, or damaged insulation at the battery module and the BCM module. If the BCM module was updated, substitute a known-good BCM module (see page 12-8), then recheck. If the BCM module was substituted, go to step 1.

NO—Go to step 23.

(cont'd)

DTC Troubleshooting (cont'd)

23. Monitor the OBD STATUS for DTC P0A9D (49) in the DTCs MENU with the HDS.

    Does the screen indicate PASSED?

    YES—If the BCM module was updated, troubleshooting is complete. If the BCM module was substituted, replace the original BCM module (see page 12-182). If any other Temporary DTCs or DTCs were indicated in step 22, go to the indicated DTC's troubleshooting. ■

    NO—If the screen indicates FAILED, check for poor connections, loose terminals, or damaged insulation at the battery module and the BCM module. If the BCM module was updated, substitute a known-good BCM module (see page 12-8), then recheck. If the BCM module was substituted, go to step 1. If the screen indicates NOT COMPLETED, keep the ignition switch ON (II) until a result comes on.

DTC P0A9E (50): Battery Module Temperature Sensor 1 Circuit High Voltage

NOTE: Before you troubleshoot, record all freeze data, and review the general troubleshooting information (see page 12-5).

1. Turn the ignition switch to ON (II).

2. Check the IMA BATTERY MODULE TEMPERATURE SENSOR 1 VOLTAGE (IMA BATTERY MODULE TEMPERATURE SENSOR 1) in the DATA LIST with the HDS.

   Is about 4.95 V or more (−40 °F (−40 °C) or less) indicated?

   YES—Go to step 3.

   NO—Intermittent failure, the system is OK at this time. Check for poor connections or loose terminals at the battery module and the BCM module. ■

3. Check for Temporary DTCs or DTCs with the HDS.

   Are DTC P0A9E (50), P0AC8 (52), and P0ACD (54) indicated at the same time?

   YES—Go to step 14.

   NO—Go to step 4.

4. Turn the ignition switch to LOCK (0).

5. Turn the battery module switch OFF (see page 12-4).

6. Remove the IPU lid (see page 12-180).

7. Disconnect the junction board 12P connector.

8. Connect junction board 12P connector terminal No. 12 to body ground with a jumper wire.

JUNCTION BOARD 12P CONNECTOR

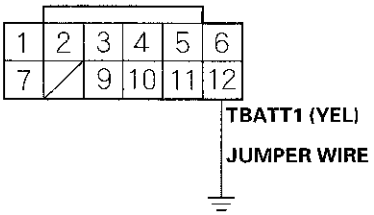

Wire side of female terminals

9. Turn the ignition switch to ON (II).

10. Check the IMA BATTERY MODULE TEMPERATURE SENSOR 1 VOLTAGE (IMA BATTERY MODULE TEMPERATURE SENSOR 1) in the DATA LIST with the HDS.

    Is about 4.95 V or more (−40 °F (−40 °C) or less) indicated?

    YES—Go to step 11.

    NO—Replace the battery module (see page 12-187), then go to step 24.

11. Turn the ignition switch to LOCK (0).

12. Disconnect BCM module connector A (40P).

13. Check for continuity between BCM module connector terminal A33 and junction board 12P connector terminal No. 12.

BCM MODULE CONNECTOR A (40P)

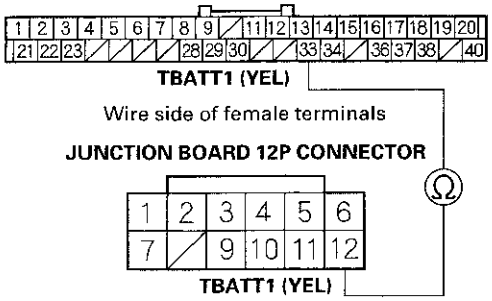

Is there continuity?

YES—Go to step 31.

NO—Repair open in the wire between the battery module and the BCM module (A33), then go to step 24.

14. Turn the ignition switch to LOCK (0).

15. Turn the battery module switch OFF (see page 12-4).

16. Remove the IPU lid (see page 12-180).

17. Connect junction board 12P connector terminal No. 10 to body ground with a jumper wire.

JUNCTION BOARD 12P CONNECTOR

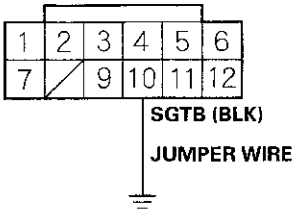

Wire side of female terminals

18. Turn the ignition switch to ON (II).

(cont'd)

DTC Troubleshooting (cont'd)

19. Check the IMA BATTERY MODULE TEMPERATURE SENSOR 1 VOLTAGE (IMA BATTERY MODULE TEMPERATURE SENSOR 1), the IMA BATTERY MODULE TEMPERATURE SENSOR 2 VOLTAGE (IMA BATTERY MODULE TEMPERATURE SENSOR 2), and the IMA BATTERY MODULE TEMPERATURE SENSOR 3 VOLTAGE (IMA BATTERY MODULE TEMPERATURE SENSOR 3) in the DATA LIST with the HDS.

    Do all sensors indicate about 4.95 V or more (−40 °F (−40 °C) or less)?

    YES—Replace the battery module (see page 12-187), then go to step 24.

    NO—Go to step 20.

20. Turn the ignition switch to LOCK (0).

21. Disconnect the junction board 12P connector.

22. Disconnect BCM module connector A (40P).

23. Check for continuity between BCM module connector terminal A6 and junction board 12P connector terminal No. 10.

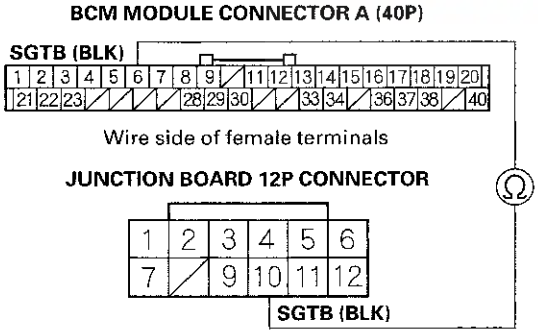

    Is there continuity?

    YES—Go to step 31.

    NO—Repair open in the wire between the battery module and the BCM module (A6), then go to step 24.

24. Turn the ignition switch to LOCK (0).

25. Reconnect all connectors.

26. Reinstall the IPU lid (see page 12-180), then turn the battery module switch ON (see page 12-4).

27. Turn the ignition switch to ON (II).

28. Clear the DTC with the HDS (see page 12-6).

29. Check for Temporary DTCs or DTCs with the HDS.

    Is DTC P0A9E (50) indicated?

    YES—Check for poor connections or loose terminals at the battery module and the BCM module, then go to step 1.

    NO—Go to step 30.

30. Monitor the OBD STATUS for DTC P0A9E (50) in the DTCs MENU with the HDS.

    Does the screen indicate PASSED?

    YES—Troubleshooting is complete. If any other Temporary DTCs or DTCs were indicated in step 29, go to the indicated DTC's troubleshooting. ■

    NO—If the screen indicates FAILED, check for poor connections or loose terminals at the battery module and the BCM module, then go to step 1. If the screen indicates NOT COMPLETED, keep the ignition switch ON (II) until a result comes on.

31. Reconnect all connectors.

32. Reinstall the IPU lid (see page 12-180), then turn the battery module switch ON (see page 12-4).

33. Update the BCM module if it does not have the latest software (see page 12-181), or substitute a known-good BCM module (see page 12-8).

34. Check for Temporary DTCs or DTCs with the HDS.

    Is DTC P0A9E (50) indicated?

    YES—Check for poor connections or loose terminals at the battery module and the BCM module. If the BCM module was updated, substitute a known-good BCM module (see page 12-8), then recheck. If the BCM module was substituted, go to step 1.

    NO—Go to step 35.

35. Monitor the OBD STATUS for DTC P0A9E (50) in the DTCs MENU with the HDS.

    Does the screen indicate PASSED?

    YES—If the BCM module was updated, troubleshooting is complete. If the BCM module was substituted, replace the original BCM module (see page 12-182). If any other Temporary DTCs or DTCs were indicated in step 34, go to the indicated DTC's troubleshooting.■

    NO—If the screen indicates FAILED, check for poor connections or loose terminals at the battery module and the BCM module. If the BCM module was updated, substitute a known-good BCM module (see page 12-8), then recheck. If the BCM module was substituted, go to step 1. If the screen indicates NOT COMPLETED, keep the ignition switch ON (II) until a result comes on.

DTC P0AA6 (59): High Voltage Circuit Isolation Problem

NOTE:
- Before you troubleshoot, record all freeze data, and review the general troubleshooting information (see page 12-5).
- If the wrong A/C compressor oil was used in the A/C system, DTC P0AA6 (59) may be set.

1. Turn the ignition switch to ON (II).

2. Check for Temporary DTCs or DTCs with the HDS.

   Is DTC P1629 (79) indicated?

   YES—Do the troubleshooting for DTC P1629 (79) (see page 12-134).

   NO—Go to step 3.

3. Turn the A/C switch off.

4. Check the INSULATION RESISTANCE OF HIGH VOLTAGE CIRCUIT in the DATA LIST with the HDS.

   Is about 350 kΩ or more indicated?

   YES—Go to step 5.

   NO—Go to step 12.

5. Start the engine, and let it idle for 1 minute.

6. Check the INSULATION RESISTANCE OF HIGH VOLTAGE CIRCUIT in the DATA LIST with the HDS.

   Is about 350 kΩ or more indicated?

   YES—Go to step 7.

   NO—Go to step 25.

(cont'd)

DTC Troubleshooting (cont'd)

7. Make sure the ambient temperature is above 41 °F (5 °C).

8. Start the engine, and let it idle for 5 minutes.

9. Turn the A/C on, and set it to 72 °F (22 °C).

10. Let the engine idle for 1 minute.

11. Check the INSULATION RESISTANCE OF HIGH VOLTAGE CIRCUIT in the DATA LIST with the HDS.

    Is there 350 kΩ or more indicated?

    YES—Intermittent short in one or more of these parts:

    - Battery module
    - MCM
    - Motor stator
    - Motor power cable
    - A/C compressor driver
    - A/C compressor
    - A/C compressor power cable
    - DC-DC converter
    - BCM module
    - Main fuse (100 A)

    NO—Go to step 32.

12. Turn the ignition switch to LOCK (0).

13. Turn the battery module switch OFF (see page 12-4).

14. Remove the IPU lid (see page 12-180).

15. Check the high voltage cables (orange cable) for poor connections and damaged insulation.

    Are the high voltage cables OK?

    YES—Go to step 16.

    NO—Replace the high voltage cables, then go to step 42.

16. Remove the high voltage cables (A) from the IMA battery.

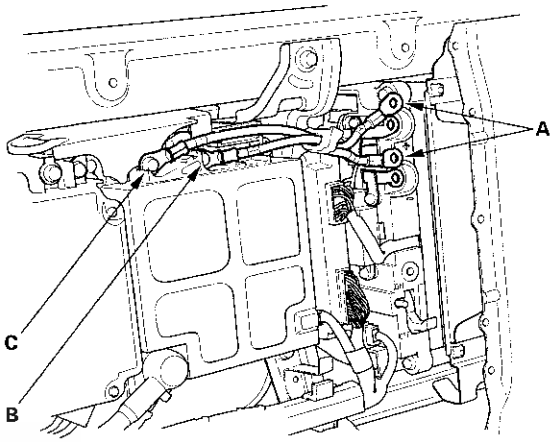

17. Measure the resistance between body ground and battery module terminals B and C individually.

    NOTE: Use the 250 V range of your insulated resistance tester, and wear gloves.

    Is there 350 kΩ or more?

    YES—Go to step 18.

    NO—Go to step 20.

18. Remove the battery module (see page 12-187).

19. Check the battery module for damage (bending of the case, burn marks, or broken insulation).

    Is the battery module OK?

    YES—Go to step 21.

    NO—Replace the battery module, then go to step 42.

20. Check the busbars on the MCM for bending or for broken insulation.

    Are the busbars OK?

    YES—Go to step 21.

    NO—Replace the busbars, then go to step 42.

21. Remove the bolts (A) from the DC-DC converter and the A/C compressor driver.

    NOTE: Wrap the DC-DC converter and A/C compressor driver terminals (B) with insulating tape.

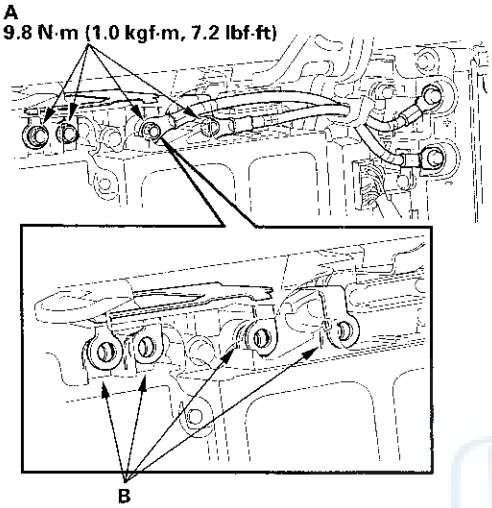

22. Measure the resistance between body ground and busbars A and B individually.

    NOTE: Use the 250 V range of your insulated resistance tester, and wear gloves.

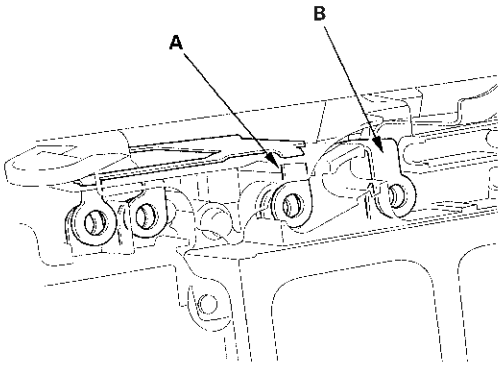

Is there 350 kΩ or more?

YES—Go to step 23.

NO—Go to step 63.

23. Remove the tape from the DC-DC converter terminal, then wrap the busbar (A) with insulating tape.

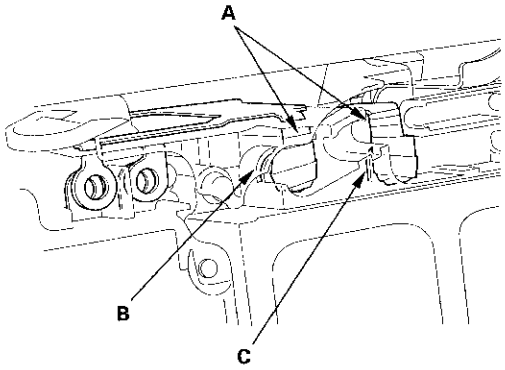

24. Measure the resistance between body ground and DC-DC converter terminals B and C individually.

    Is there 350 kΩ or more?

    YES—Replace the A/C compressor driver (see page 21-109), then go to step 42.

    NO—Replace the DC-DC converter (see page 12-182), then go to step 42.

25. Turn the ignition switch to LOCK (0).

26. Turn the battery module switch OFF (see page 12-4).

27. Remove the IPU lid (see page 12-180).

(cont'd)

DTC Troubleshooting (cont'd)

28. Lift the harness holder. Remove the PDU cover (A), and the motor power cables (B) from the MCM.

    NOTE: Wrap the motor power cables with insulating tape (C).

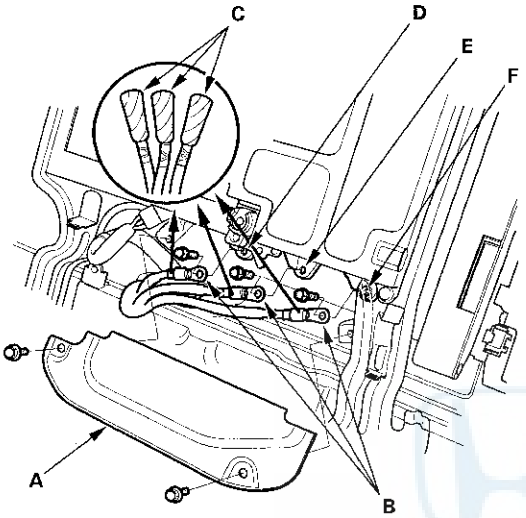

29. Measure the resistance between body ground and MCM terminals D, E, and F individually.

    NOTE: Use the 250 V range of your insulated resistance tester, and wear gloves.

    Is there 350 kΩ or more?

    YES—Go to step 30.

    NO—Go to step 63.

30. Disconnect the motor power cable (A).

    NOTE:
    - Disconnecting the motor power cable connector from the motor stator (see page 12-3).
    - If the motor power cable terminals are wet, dry them with a clean towel. Do not use compressed air.

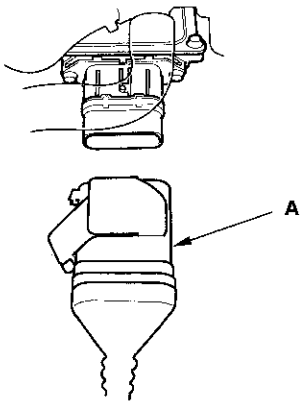

31. Measure the resistance between body ground and motor power cable terminals A, B, and C individually.

    NOTE: Use the 250 V range of your insulated resistance tester, and wear gloves.

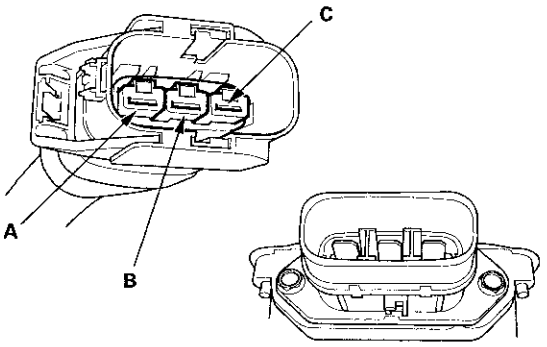

    Is there 350 kΩ or more?

    YES—Replace the motor stator (see page 12-195), then go to step 42.

    NO—Replace the motor power cable (see page 12-189), then go to step 42.

32. Turn the ignition switch to LOCK (0).

33. Turn the battery module switch OFF (see page 12-4).

34. Remove the cover (A). Disconnect the A/C compressor power cable connector (B) from the engine compartment.

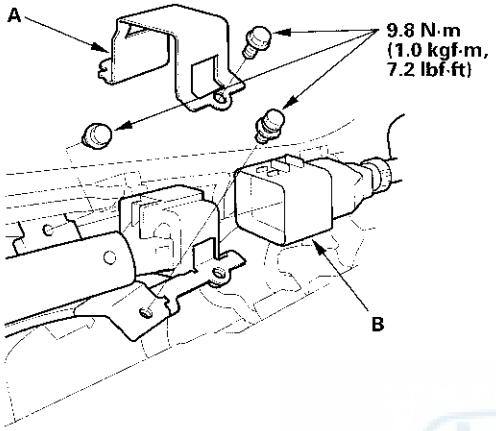

35. Measure the resistance between body ground and A/C compressor power cable terminals A, B, and C individually.

NOTE:
- If the A/C compressor power cable connector terminals are wet, dry them with a clean towel. Do not use compressed air.
- Use the 250 V range of your insulated resistance tester, and wear gloves.

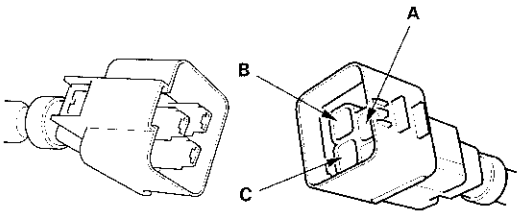

Is there 350 kΩ or more?

YES—Go to step 36.

NO—Go to step 39.

36. Remove the IPU lid (see page 12-180).

37. Disconnect the A/C compressor power connector (A) from the A/C compressor driver.

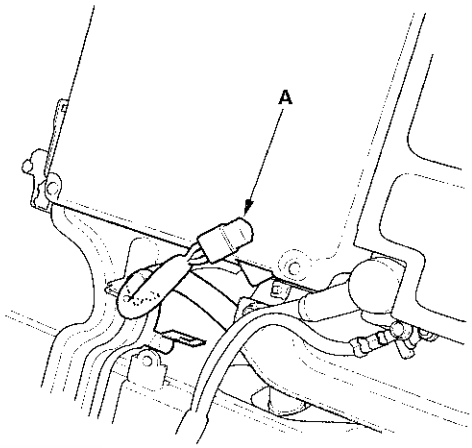

38. Measure the resistance between body ground and A/C compressor power cable terminals A, B, and C individually.

NOTE:
- If the A/C compressor power cable connector terminals are wet, dry them with a clean towel. Do not use compressed air.
- Use the 250 V range of your insulated resistance tester, and wear gloves.

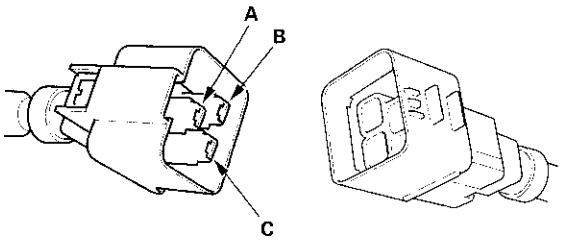

Is there 350 kΩ or more?

YES—Replace the A/C compressor driver (see page 21-109), then go to step 42.

NO—Replace the motor power cable (see page 12-189), then go to step 42.

(cont'd)

DTC Troubleshooting (cont'd)

39. Remove the A/C compressor (see page 21-110).

40. Drain the oil from the A/C compressor.

41. At the A/C compressor side, measure the resistance between body ground and A/C compressor power cable connector terminals A, B, and C individually.

    NOTE:
    - If the A/C compressor power cable connector terminals are wet, dry them with a clean towel. Do not use compressed air.
    - Use the 250 V range of your insulated resistance tester, and wear gloves.

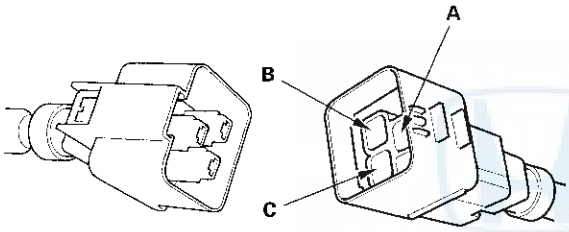

Is there 350 kΩ or more?

YES—Replace the A/C compressor oil (see page 21-7), then go to step 42.

NO—Replace the A/C compressor (see page 21-110), then go to step 42.

42. Turn the ignition switch to LOCK (0).

43. Reconnect all connectors.

44. Reinstall the IPU lid (see page 12-180), then turn the battery module switch ON (see page 12-4).

45. Turn the ignition switch to ON (II).

46. Clear the DTC with the HDS (see page 12-6).

47. Make sure the ambient temperature is above 41 °F (5 °C).

48. Start the engine, and let it idle for 5 minutes.

49. Turn the A/C on and set it to 72 °F (22 °C).

50. Let the engine idle for 1 minute.

51. Check for Temporary DTCs or DTCs with the HDS.

    Is DTC P0AA6 (59) indicated?

    YES—Check for poor connections or loose terminals at the MCM, the A/C compressor driver, the motor stator, the motor power cable, and the BCM module, then go to step 1.

    NO—Go to step 52.

52. Monitor the OBD STATUS for DTC P0AA6 (59) in the DTCs MENU with the HDS.

    Does the screen indicate PASSED?

    YES—Troubleshooting is complete. If any other Temporary DTCs or DTCs were indicated in step 51, go to the indicated DTC's troubleshooting.■

    NO—If the screen indicates FAILED, check for poor connections or loose terminals at the MCM, the A/C compressor driver, the motor stator, the motor power cable, and the BCM module, then go to step 1. If the screen indicates NOT COMPLETED, go to step 47.

53. Reconnect all connectors.

54. Reinstall the IPU lid (see page 12-180), then turn the battery module switch ON (see page 12-4).

55. Update the BCM module if it does not have the latest software (see page 12-181), or substitute a known-good BCM module (see page 12-8).

56. Clear the DTC with the HDS (see page 12-6).

57. Make sure the ambient temperature is above 41 °F (5 °C).

58. Start the engine, and let it idle for 5 minutes.

59. Turn the A/C on, and set it to 72 °F (22 °C).

60. Let the engine idle for 1 minute.

61. Check for Temporary DTCs or DTCs with the HDS.

    Is DTC P0AA6 (59) indicated?

    YES—Check for poor connections or loose terminals at the MCM, the A/C compressor driver, the motor stator, the motor power cable, and the BCM module. If the BCM module was updated, substitute a known-good BCM module (see page 12-8), then go to step 57. If the BCM module was substituted, go to step 1.

    NO—Go to step 62.

62. Monitor the OBD STATUS for DTC P0AA6 (59) in the DTCs MENU with the HDS.

    Does the screen indicate PASSED?

    YES—If the BCM module was updated, troubleshooting is complete. If the BCM module was substituted, replace the original BCM module (see page 12-182). If any other Temporary DTCs or DTCs were indicated in step 61, go to the indicated DTC's troubleshooting. ■

    NO—If the screen indicates FAILED, check for poor connections or loose terminals at the MCM, the A/C compressor driver, the motor stator, the motor power cable, and the BCM module. If the BCM module was updated, substitute a known-good BCM module (see page 12-8), then go to step 57. If the BCM module was substituted, go to step 1. If the screen indicates NOT COMPLETED, go to step 59.

63. Reconnect all connectors.

64. Reinstall the IPU lid (see page 12-180), then turn the battery module switch ON (see page 12-4).

65. Update the MCM if it does not have the latest software (see page 12-185), or substitute a known-good MCM (see page 12-8).

66. Clear the DTC with the HDS (see page 12-6).

67. Make sure the ambient temperature is above 41 °F (5 °C).

68. Start the engine, and let it idle for 5 minutes.

69. Turn the A/C on, and set it to 72 °F (22 °C).

70. Let the engine idle for 1 minute.

71. Check for Temporary DTCs or DTCs with the HDS.

    Is DTC P0AA6 (59) indicated?

    YES—Check for poor connections or loose terminals at the MCM, the A/C compressor driver, the motor stator, the motor power cable, and the BCM module. If the MCM was updated, substitute a known-good MCM (see page 12-8), then go to step 67. If the MCM was substituted, go to step 1.

    NO—Go to step 72.

72. Monitor the OBD STATUS for DTC P0AA6 (59) in the DTCs MENU with the HDS.

    Does the screen indicate PASSED?

    YES—If the MCM was updated, troubleshooting is complete. If the MCM was substituted, replace the original MCM (see page 12-186). If any other Temporary DTCs or DTCs were indicated in step 71, go to the indicated DTC's troubleshooting. ■

    NO—If the screen indicates FAILED, check for poor connections or loose terminals at the MCM, the A/C compressor driver, the motor stator, the motor power cable, and the BCM module. If the MCM was updated, substitute a known-good MCM (see page 12-8), then go to step 67. If the MCM was substituted, go to step 1. If the screen indicates NOT COMPLETED, go to step 69.

DTC Troubleshooting (cont'd)

DTC P0AA7 (76): BCM Module Internal Circuit Malfunction

NOTE: Before you troubleshoot, record all freeze data, and review the general troubleshooting information (see page 12-5).

1. Turn the ignition switch to ON (II).

2. Monitor the OBD STATUS for DTC P0AA7 (76) in the DTCs MENU with the HDS.

   Does the screen indicate FAILED?

   YES—Go to step 3.

   NO—If the screen indicates PASSED, intermittent failure, the system is OK at this time. Check for poor connections or loose terminals at the BCM module. If the screen indicates NOT COMPLETED, go to step 1.

3. Update the BCM module if it does not have the latest software (see page 12-181), or substitute a known-good BCM module (see page 12-8).

4. Check for Temporary DTCs or DTCs with the HDS.

   Is DTC P0AA7 (76) indicated?

   YES—Check for poor connections or loose terminals at the BCM module. If the BCM module was updated, substitute a known-good BCM module (see page 12-8), then recheck. If the BCM module was substituted, go to step 1.

   NO—Go to step 5.

5. Monitor the OBD STATUS for DTC P0AA7 (76) in the DTCs MENU with the HDS.

   Does the screen indicate PASSED?

   YES—If the BCM module was updated, troubleshooting is complete. If the BCM module was substituted, replace the original BCM module (see page 12-182). If any other Temporary DTCs or DTCs were indicated in step 4, go to the indicated DTC's troubleshooting. ■

   NO—If the screen indicates FAILED, check for poor connections or loose terminals at the BCM module. If the BCM module was updated, substitute a known-good BCM module (see page 12-8), then recheck. If the BCM module was substituted, go to step 1. If the screen indicates NOT COMPLETED, keep the ignition switch ON (II) until a result comes on.

DTC P0AC0 (65): Battery Current Sensor Circuit Malfunction

NOTE: Before you troubleshoot, record all freeze data, and review the general troubleshooting information (see page 12-5).

1. Turn the ignition switch to ON (II).

2. Turn the ignition switch to LOCK (0), and wait 1 minute.

3. Turn the ignition switch to ON (II).

4. Monitor the OBD STATUS for DTC P0AC0 (65) in the DTCs MENU with the HDS.

   Does the screen indicate FAILED?

   YES—Go to step 5.

   NO—If the screen indicates PASSED, intermittent failure, the system is OK at this time. Check for poor connections or loose terminals at the battery current sensor and the BCM module. If the screen indicates NOT COMPLETED, go to step 1.

5. Turn the ignition switch to LOCK (0).

6. Turn the battery module switch OFF (see page 12-4).

7. Remove the IPU lid (see page 12-180).

8. Check the BCM module and the junction board 12P connections.

   Are the connections OK?

   YES—Go to step 9.

   NO—Repair the connections, then go to step 17.

9. Turn the ignition switch to ON (II).

10. Measure the voltage between BCM module connector terminals A5 and A7.

BCM MODULE CONNECTOR A (40P)

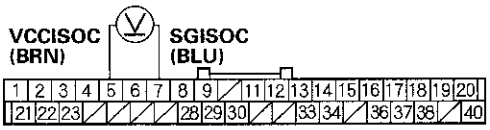

Wire side of female terminals

Is there 4–5 V?

YES—Replace the battery module (see page 12-187), then go to step 16.

NO—Go to step 11.

11. Turn the ignition switch to LOCK (0).

12. Disconnect BCM module connector A (40P).

13. Disconnect the junction board 12P connector.

(cont'd)

DTC Troubleshooting (cont'd)

14. Check for continuity between BCM module connector terminal A5 and body ground.

BCM MODULE CONNECTOR A (40P)

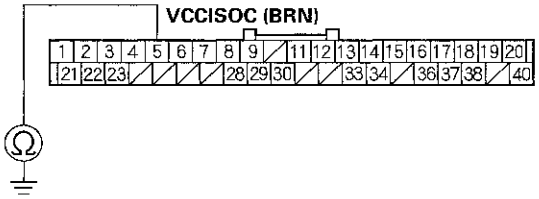

Wire side of female terminals

Is there continuity?

YES—Repair short to ground in the wire between the junction board and the BCM module (A5), then go to step 16.

NO—Go to step 15.

15. Check for continuity between junction board 12P connector terminal No. 6 and BCM module connector terminal A5.

BCM MODULE CONNECTOR A (40P)

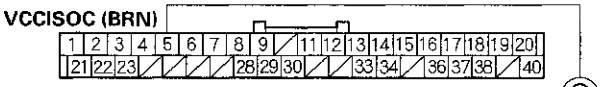

Wire side of female terminals

JUNCTION BOARD 12P CONNECTOR

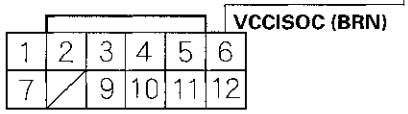

Wire side of female terminals

Is there continuity?

YES—Go to step 25.

NO—Repair open in the wire between the BCM module (A5) and the junction board, then go to step 16.

16. Turn the ignition switch to LOCK (0).

17. Reconnect all connectors.

18. Reinstall the IPU lid (see page 12-180), then turn the battery module switch ON (see page 12-4).

19. Turn the ignition switch to ON (II).

20. Clear the DTC with the HDS (see page 12-6).

21. Turn the ignition switch to LOCK (0), and wait 1 minute.

22. Turn the ignition switch to ON (II).

23. Check for Temporary DTCs or DTCs with the HDS.

Is DTC P0AC0 (65) indicated?

YES—Check for poor connections or loose terminals at the battery current sensor and the BCM module, then go to step 1.

NO—Go to step 24.

24. Monitor the OBD STATUS for DTC P0AC0 (65) in the DTCs MENU with the HDS.

Does the screen indicate PASSED?

YES—Troubleshooting is complete. If any other Temporary DTCs or DTCs were indicated in step 23, go to the indicated DTC's troubleshooting. ■

NO—If the screen indicates FAILED, check for poor connections or loose terminals at the battery current sensor and the BCM module. If the screen indicates NOT COMPLETED, go to step 21.

25. Reconnect all connectors.

26. Reinstall the IPU lid (see page 12-180), then turn the battery module switch ON (see page 12-4).

27. Update the BCM module if it does not have the latest software (see page 12-181), or substitute a known-good BCM module (see page 12-8).

28. Turn the ignition switch to LOCK (0), and wait 1 minute.

29. Turn the ignition switch to ON (II).

30. Check for Temporary DTCs or DTCs with the HDS.

    Is DTC P0AC0 (65) indicated?

    YES—Check for poor connections or loose terminals at the battery current sensor and the BCM module. If the BCM module was updated, substitute a known-good BCM module (see page 12-8), then go to step 28. If the BCM module was substituted, go to step 1.

    NO—Go to step 31.

31. Monitor the OBD STATUS for DTC P0AC0 (65) in the DTCs MENU with the HDS.

    Does the screen indicate PASSED?

    YES—If the BCM module was updated, troubleshooting is complete. If the BCM module was substituted, replace the original BCM module (see page 12-182). If any other Temporary DTCs or DTCs were indicated in step 30, go to the indicated DTC's troubleshooting.■

    NO—If the screen indicates FAILED, check for poor connections or loose terminals at the BCM module. If the BCM module was updated, substitute a known-good BCM module (see page 12-8), then go to step 28. If the BCM module was substituted, go to step 1. If the screen indicates NOT COMPLETED, go to step 28.

DTC P0AC7 (51): Battery Module Temperature Sensor 2 Circuit Low Voltage

NOTE: Before you troubleshoot, record all freeze data, and review the general troubleshooting information (see page 12-5).

1. Turn the ignition switch to ON (II).

2. Check the IMA BATTERY MODULE TEMPERATURE SENSOR 2 VOLTAGE (IMA BATTERY MODULE TEMPERATURE SENSOR 2) in the DATA LIST with the HDS.

   Is about 0.05 V or less (194 °F (90 °C) or more) indicated?

   YES—Go to step 3.

   NO—Intermittent failure, the system is OK at this time. Check for poor connections, loose terminals, or damaged insulation at the battery module and the BCM module.■

3. Turn the ignition switch to LOCK (0).

4. Turn the battery module switch OFF (see page 12-4).

5. Remove the IPU lid (see page 12-180).

6. Disconnect the junction board 12P connector.

7. Turn the ignition switch to ON (II).

8. Check the IMA BATTERY MODULE TEMPERATURE SENSOR 2 VOLTAGE (IMA BATTERY MODULE TEMPERATURE SENSOR 2) in the DATA LIST with the HDS.

   Is about 0.05 V or less (194 °F (90 °C) or more) indicated?

   YES—Go to step 9.

   NO—Replace the battery module (see page 12-187), then go to step 12.

9. Turn the ignition switch to LOCK (0).

10. Disconnect BCM module connector A (40P).

(cont'd)

DTC Troubleshooting (cont'd)

11. Check for continuity between BCM module connector terminal A34 and body ground.

BCM MODULE CONNECTOR A (40P)

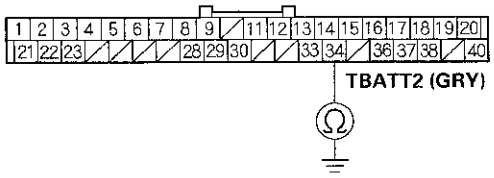

Wire side of female terminals

Is there continuity?

YES—Repair short to ground in the wire between the battery module and the BCM module (A34), then go to step 12.

NO—Go to step 19.

12. Turn the ignition switch to LOCK (0).

13. Reconnect all connectors.

14. Reinstall the IPU lid (see page 12-180), then turn the battery module switch ON (see page 12-4).

15. Turn the ignition switch to ON (II).

16. Clear the DTC with the HDS (see page 12-6).

17. Check for Temporary DTCs or DTCs with the HDS.

Is DTC P0AC7 (51) indicated?

YES—Check for poor connections, loose terminals, or damaged insulation at the battery module and the BCM module, then go to step 1.

NO—Go to step 18.

18. Monitor the OBD STATUS for DTC P0AC7 (51) in the DTCs MENU with the HDS.

Does the screen indicate PASSED?

YES—Troubleshooting is complete. If any other Temporary DTCs or DTCs were indicated in step 17, go to the indicated DTC's troubleshooting. ■

NO—If the screen indicates FAILED, check for poor connections, loose terminals, or damaged insulation at the battery module and the BCM module, then go to step 1. If the screen indicates NOT COMPLETED, keep the ignition switch ON (II) until a result comes on.

19. Reconnect all connectors.

20. Reinstall the IPU lid (see page 12-180), then turn the battery module switch ON (see page 12-4).

21. Update the BCM module if it does not have the latest software (see page 12-181), or substitute a known-good BCM module (see page 12-8).

22. Check for Temporary DTCs or DTCs with the HDS.

Is DTC P0AC7 (51) indicated?

YES—Check for poor connections, loose terminals, or damaged insulation at the battery module and the BCM module. If the BCM module was updated, substitute a known-good BCM module (see page 12-8), then recheck. If the BCM module was substituted, go to step 1.

NO—Go to step 23.

23. Monitor the OBD STATUS for DTC P0AC7 (51) in the DTCs MENU with the HDS.

    Does the screen indicate PASSED?

    YES—If the BCM module was updated, troubleshooting is complete. If the BCM module was substituted, replace the original BCM module (see page 12-182). If any other Temporary DTCs or DTCs were indicated in step 22, go to the indicated DTC's troubleshooting.■

    NO—If the screen indicates FAILED, check for poor connections, loose terminals, or damaged insulation at the battery module and the BCM module. If the BCM module was updated, substitute a known-good BCM module (see page 12-8), then recheck. If the BCM module was substituted, go to step 1. If the screen indicates NOT COMPLETED, keep the ignition switch ON (II) until a result comes on.

DTC P0AC8 (52): Battery Module Temperature Sensor 2 Circuit High Voltage

NOTE: Before you troubleshoot, record all freeze data, and review the general troubleshooting information (see page 12-5).

1. Turn the ignition switch to ON (II).

2. Check the IMA BATTERY MODULE TEMPERATURE SENSOR 2 VOLTAGE (IMA BATTERY MODULE TEMPERATURE SENSOR 2) in the DATA LIST with the HDS.

   Is about 4.95 V or more (−40 °F (−40 °C) or less) indicated?

   YES—Go to step 3.

   NO—Intermittent failure, the system is OK at this time. Check for poor connections or loose terminals at the battery module and the BCM module.■

3. Check for Temporary DTCs or DTCs with the HDS.

   Are DTC P0A9E (50), P0AC8 (52), and P0ACD (54) indicated at the same time?

   YES—Go to step 14.

   NO—Go to step 4.

4. Turn the ignition switch to LOCK (0).

5. Turn the battery module switch OFF (see page 12-4).

6. Remove the IPU lid (see page 12-180).

7. Disconnect the junction board 12P connector.

(cont'd)

DTC Troubleshooting (cont'd)

8. Connect junction board 12P connector terminal No. 11 to body ground with a jumper wire.

JUNCTION BOARD 12P CONNECTOR

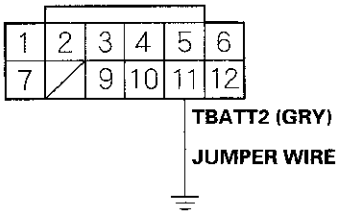

Wire side of female terminals

9. Turn the ignition switch to ON (II).

10. Check the IMA BATTERY MODULE TEMPERATURE SENSOR 2 VOLTAGE (IMA BATTERY MODULE TEMPERATURE SENSOR 2) in the DATA LIST with the HDS.

    Is about 4.95 V or more (−40 °F (−40 °C) or less) indicated?

    YES—Go to step 11.

    NO—Replace the battery module (see page 12-187), then go to step 24.

11. Turn the ignition switch to LOCK (0).

12. Disconnect BCM module connector A (40P).

13. Check for continuity between BCM module connector terminal A34 and junction board 12P connector terminal No. 11.

BCM MODULE CONNECTOR A (40P)

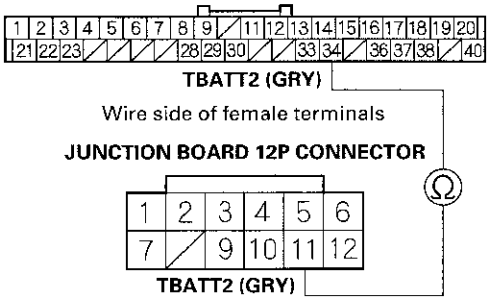

Wire side of female terminals

Wire side of female terminals

Is there continuity?

YES—Go to step 31.

NO—Repair open in the wire between the battery module and the BCM module (A34), then go to step 24.

14. Turn the ignition switch to LOCK (0).

15. Turn the battery module switch OFF (see page 12-4).

16. Remove the IPU lid (see page 12-180).

17. Connect junction board 12P connector terminal No. 10 to body ground with a jumper wire.

JUNCTION BOARD 12P CONNECTOR

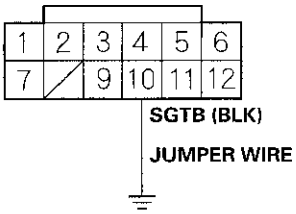

Wire side of female terminals

18. Turn the ignition switch to ON (II).

19. Check the IMA BATTERY MODULE TEMPERATURE SENSOR 1 VOLTAGE (IMA BATTERY MODULE TEMPERATURE SENSOR 1), the IMA BATTERY MODULE TEMPERATURE SENSOR 2 VOLTAGE (IMA BATTERY MODULE TEMPERATURE SENSOR 2), and the IMA BATTERY MODULE TEMPERATURE SENSOR 3 VOLTAGE (IMA BATTERY MODULE TEMPERATURE SENSOR 3) in the DATA LIST with the HDS.

    Do all sensors indicate about 4.95 V or more (−40 °F (−40 °C) or less)?

    YES—Replace the battery module (see page 12-187), then go to step 24.

    NO—Go to step 20.

20. Turn the ignition switch to LOCK (0).

21. Disconnect the junction board 12P connector.

22. Disconnect BCM module connector A (40P).

23. Check for continuity between BCM module connector terminal A6 and junction board 12P connector terminal No. 10.

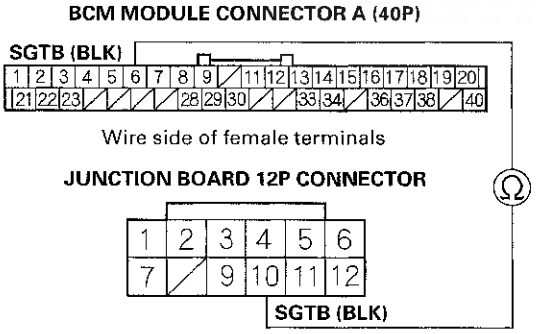

    Is there continuity?

    YES—Go to step 31.

    NO—Repair open in the wire between the battery module and the BCM module (A6), then go to step 24.

24. Turn the ignition switch to LOCK (0).

25. Reconnect all connectors.

26. Reinstall the IPU lid (see page 12-180), then turn the battery module switch ON (see page 12-4).

27. Turn the ignition switch to ON (II).

28. Clear the DTC with the HDS (see page 12-6).

29. Check for Temporary DTCs or DTCs with the HDS.

    Is DTC P0AC8 (52) indicated?

    YES—Check for poor connections or loose terminals at the battery module and the BCM module, then go to step 1.

    NO—Go to step 30.

30. Monitor the OBD STATUS for DTC P0AC8 (52) in the DTCs MENU with the HDS.

    Does the screen indicate PASSED?

    YES—Troubleshooting is complete. If any other Temporary DTCs or DTCs were indicated in step 29, go to the indicated DTC's troubleshooting. ■

    NO—If the screen indicates FAILED, check for poor connections or loose terminals at the battery module and the BCM module, then go to step 1. If the screen indicates NOT COMPLETED, keep the ignition switch ON (II) until a result comes on.

31. Reconnect all connectors.

32. Reinstall the IPU lid (see page 12-180), then turn the battery module switch ON (see page 12-4).

33. Update the BCM module if it does not have the latest software (see page 12-181), or substitute a known-good BCM module (see page 12-8).

(cont'd)

DTC Troubleshooting (cont'd)

34. Check for Temporary DTCs or DTCs with the HDS.

    Is DTC P0AC8 (52) indicated?

    YES—Check for poor connections or loose terminals at the battery module and the BCM module. If the BCM module was updated, substitute a known-good BCM module (see page 12-8), then recheck. If the BCM module was substituted, go to step 1.

    NO—Go to step 35.

35. Monitor the OBD STATUS for DTC P0AC8 (52) in the DTCs MENU with the HDS.

    Does the screen indicate PASSED?

    YES—If the BCM module was updated, troubleshooting is complete. If the BCM module was substituted, replace the original BCM module (see page 12-182). If any other Temporary DTCs or DTCs were indicated in step 34, go to the indicated DTC's troubleshooting.■

    NO—If the screen indicates FAILED, check for poor connections or loose terminals at the battery module and the BCM module. If the BCM module was updated, substitute a known-good BCM module (see page 12-8), then recheck. If the BCM module was substituted, go to step 1. If the screen indicates NOT COMPLETED, keep the ignition switch ON (II) until a result comes on.

DTC P0ACC (53): Battery Module Temperature Sensor 3 Circuit Low Voltage

NOTE: Before you troubleshoot, record all freeze data, and review the general troubleshooting information (see page 12-5).

1. Turn the ignition switch to ON (II).

2. Check the IMA BATTERY MODULE TEMPERATURE SENSOR 3 VOLTAGE (IMA BATTERY MODULE TEMPERATURE SENSOR 3) in the DATA LIST with the HDS.

   Is about 0.05 V or less (194 °F (90 °C) or more) indicated?

   YES—Go to step 3.

   NO—Intermittent failure, the system is OK at this time. Check for poor connections, loose terminals, or damaged insulation at the battery module and the BCM module.■

3. Turn the ignition switch to LOCK (0).

4. Turn the battery module switch OFF (see page 12-4).

5. Remove the IPU lid (see page 12-180).

6. Disconnect the junction board 12P connector.

7. Turn the ignition switch to ON (II).

8. Check the IMA BATTERY MODULE TEMPERATURE SENSOR 3 VOLTAGE (IMA BATTERY MODULE TEMPERATURE SENSOR 3) in the DATA LIST with the HDS.

   Is about 0.05 V or less (194 °F (90 °C) or more) indicated?

   YES—Go to step 9.

   NO—Replace the battery module (see page 12-187), then go to step 12.

9. Turn the ignition switch to LOCK (0).

10. Disconnect BCM module connector A (40P).

11. Check for continuity between BCM module connector terminal A15 and body ground.

BCM MODULE CONNECTOR A (40P)

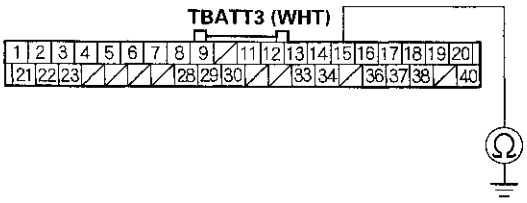

Wire side of female terminals

Is there continuity?

YES—Repair short to ground in the wire between the battery module and the BCM module (A15), then go to step 12.

NO—Go to step 19.

12. Turn the ignition switch to LOCK (0).

13. Reconnect all connectors.

14. Reinstall the IPU lid (see page 12-180), then turn the battery module switch ON (see page 12-4).

15. Turn the ignition switch to ON (II).

16. Clear the DTC with the HDS (see page 12-6).

17. Check for Temporary DTCs or DTCs with the HDS.

Is DTC P0ACC (53) indicated?

YES—Check for poor connections, loose terminals, or damaged insulation at the battery module and the BCM module, then go to step 1.

NO—Go to step 18.

18. Monitor the OBD STATUS for DTC P0ACC (53) in the DTCs MENU with the HDS.

Does the screen indicate PASSED?

YES—Troubleshooting is complete. If any other Temporary DTCs or DTCs were indicated in step 17, go to the indicated DTC's troubleshooting.■

NO—If the screen indicates FAILED, check for poor connections, loose terminals, or damaged insulation at the battery module and the BCM module, then go to step 1. If the screen indicates NOT COMPLETED, keep the ignition switch ON (II) until a result comes on.

19. Reconnect all connectors.

20. Reinstall the IPU lid (see page 12-180), then turn the battery module switch ON (see page 12-4).

21. Update the BCM module if it does not have the latest software (see page 12-181), or substitute a known-good BCM module (see page 12-8).

22. Check for Temporary DTCs or DTCs with the HDS.

Is DTC P0ACC (53) indicated?

YES—Check for poor connections or loose terminals at the battery module and the BCM module. If the BCM module was updated, substitute a known-good BCM module (see page 12-8), then recheck. If the BCM module was substituted, go to step 1.

NO—Go to step 23.

(cont'd)

DTC Troubleshooting (cont'd)

23. Monitor the OBD STATUS for DTC P0ACC (53) in the DTCs MENU with the HDS.

    Does the screen indicate PASSED?

    YES—If the BCM module was updated, troubleshooting is complete. If the BCM module was substituted, replace the original BCM module (see page 12-182). If any other Temporary DTCs or DTCs were indicated in step 22, go to the indicated DTC's troubleshooting.■

    NO—If the screen indicates FAILED, check for poor connections, loose terminals, or damaged insulation at the battery module and the BCM module. If the BCM module was updated, substitute a known-good BCM module (see page 12-8), then recheck. If the BCM module was substituted, go to step 1. If the screen indicates NOT COMPLETED, keep the ignition switch ON (II) until a result comes on.

DTC P0ACD (54): Battery Module Temperature Sensor 3 Circuit High Voltage

NOTE: Before you troubleshoot, record all freeze data, and review the general troubleshooting information (see page 12-5).

1. Turn the ignition switch to ON (II).

2. Check the IMA BATTERY MODULE TEMPERATURE SENSOR 3 VOLTAGE (IMA BATTERY MODULE TEMPERATURE SENSOR 3) in the DATA LIST with the HDS.

   Is about 4.95 V or more (−40 °F (−40 °C) or less) indicated?

   YES—Go to step 3.

   NO—Intermittent failure, the system is OK at this time. Check for poor connections or loose terminals at the battery module and the BCM module.■

3. Check for Temporary DTCs or DTCs with the HDS.

   Are DTC P0A9E (50), P0AC8 (52), and P0ACD (54) indicated at the same time?

   YES—Go to step 14.

   NO—Go to step 4.

4. Turn the ignition switch to LOCK (0).

5. Turn the battery module switch OFF (see page 12-4).

6. Remove the IPU lid (see page 12-180).

7. Disconnect the junction board 12P connector.

8. Connect junction board 12P connector terminal No. 9 to body ground with a jumper wire.

JUNCTION BOARD 12P CONNECTOR

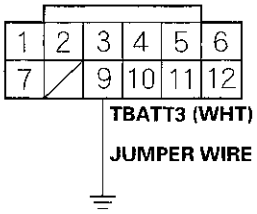

Wire side of female terminals

9. Turn the ignition switch to ON (II).

10. Check the IMA BATTERY MODULE TEMPERATURE SENSOR 3 VOLTAGE (IMA BATTERY MODULE TEMPERATURE SENSOR 3) in the DATA LIST with the HDS.

    Is about 4.95 V or more (−40 °F (40 °C) or less) indicated?

    YES—Go to step 11.

    NO—Replace the battery module (see page 12-187), then go to step 24.

11. Turn the ignition switch to LOCK (0).

12. Disconnect BCM module connector A (40P).

13. Check for continuity between BCM module connector terminal A15 and junction board 12P connector terminal No. 9.

BCM MODULE CONNECTOR A (40P)

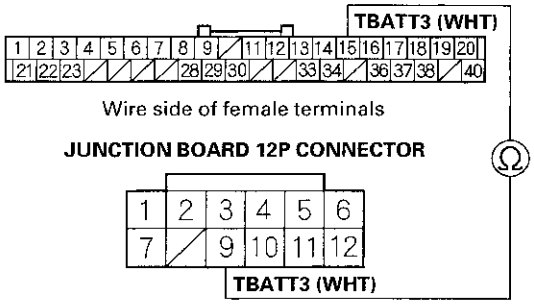

Wire side of female terminals

Is there continuity?

YES—Go to step 31.

NO—Repair open in the wire between the battery module and the BCM module (A15), then go to step 24.

14. Turn the ignition switch to LOCK (0).

15. Turn the battery module switch OFF (see page 12-4).

16. Remove the IPU lid (see page 12-180).

17. Connect junction board 12P connector terminal No. 10 to body ground with a jumper wire.

JUNCTION BOARD 12P CONNECTOR

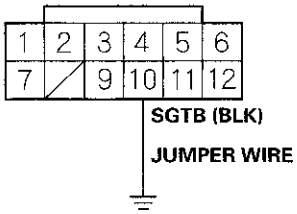

Wire side of female terminals

18. Turn the ignition switch to ON (II).

(cont'd)

DTC Troubleshooting (cont'd)

19. Check the IMA BATTERY MODULE TEMPERATURE SENSOR 1 VOLTAGE (IMA BATTERY MODULE TEMPERATURE SENSOR 1), the IMA BATTERY MODULE TEMPERATURE SENSOR 2 VOLTAGE (IMA BATTERY MODULE TEMPERATURE SENSOR 2), and the IMA BATTERY MODULE TEMPERATURE SENSOR 3 VOLTAGE (IMA BATTERY MODULE TEMPERATURE SENSOR 3) in the DATA LIST with the HDS.

    Do all sensors indicate about 4.95 V or more (−40 °F (−40 °C) or less)?

    YES—Replace the battery module (see page 12-187), then go to step 24.

    NO—Go to step 20.

20. Turn the ignition switch to LOCK (0).

21. Disconnect the junction board 12P connector.

22. Disconnect BCM module connector A (40P).

23. Check for continuity between BCM module connector terminal A6 and junction board 12P connector terminal No. 10.

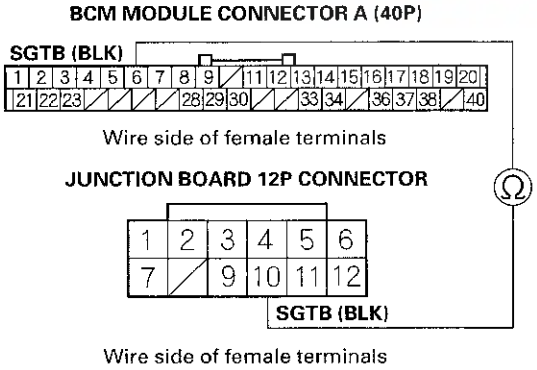

    Is there continuity?

    YES—Go to step 31.

    NO—Repair open in the wire between the battery module and the BCM module (A6), then go to step 24.

24. Turn the ignition switch to LOCK (0).

25. Reconnect all connectors.

26. Reinstall the IPU lid (see page 12-180), then turn the battery module switch ON (see page 12-4).

27. Turn the ignition switch to ON (II).

28. Clear the DTC with the HDS (see page 12-6).

29. Check for Temporary DTCs or DTCs with the HDS.

    Is DTC P0ACD (54) indicated?

    YES—Check for poor connections or loose terminals at the battery module and the BCM module, then go to step 1.

    NO—Go to step 30.

30. Monitor the OBD STATUS for DTC P0ACD (54) in the DTCs MENU with the HDS.

    Does the screen indicate PASSED?

    YES—Troubleshooting is complete. If any other Temporary DTCs or DTCs were indicated in step 29, go to the indicated DTC's troubleshooting. ■

    NO—If the screen indicates FAILED, check for poor connections or loose terminals at the battery module and the BCM module, then go to step 1. If the screen indicates NOT COMPLETED, keep the ignition switch ON (II) until a result comes on.

31. Reconnect all connectors.

32. Reinstall the IPU lid (see page 12-180), then turn the battery module switch ON (see page 12-4).

33. Update the BCM module if it does not have the latest software (see page 12-181), or substitute a known-good BCM module (see page 12-8).

34. Check for Temporary DTCs or DTCs with the HDS.

    Is DTC P0ACD (54) indicated?

    YES—Check for poor connections or loose terminals at the battery module and the BCM module. If the BCM module was updated, substitute a known-good BCM module (see page 12-8), then recheck. If the BCM module was substituted, go to step 1.

    NO—Go to step 35.

35. Monitor the OBD STATUS for DTC P0ACD (54) in the DTCs MENU with the HDS.

    Does the screen indicate PASSED?

    YES—If the BCM module was updated, troubleshooting is complete. If the BCM module was substituted, replace the original BCM module (see page 12-182). If any other Temporary DTCs or DTCs were indicated in step 34, go to the indicated DTC's troubleshooting.■

    NO—If the screen indicates FAILED, check for poor connections or loose terminals at the battery module and the BCM module. If the BCM module was updated, substitute a known-good BCM module (see page 12-8), then recheck. If the BCM module was substituted, go to step 1. If the screen indicates NOT COMPLETED, keep the ignition switch ON (II) until a result comes on.

DTC P0AE1 (62): Bypass Contactor Malfunction

⚠CAUTION

Be careful not to touch high voltage cables and parts when you turn the battery module switch ON, or while the battery module switch is ON.

NOTE: Before you troubleshoot, record all freeze data, and review the general troubleshooting information (see page 12-5).

1. Turn the ignition switch to ON (II).

2. Check for Temporary DTCs or DTCs with the HDS.

   Is DTC P0A78 (32) or P1570 (66) indicated?

   YES—Do the troubleshooting for DTC P0A78 (32) (see page 12-64), or DTC P1570 (66) (see page 12-113).

   NO—Go to step 3.

3. Clear the DTC with the HDS (see page 12-6).

4. Check for Temporary DTCs or DTCs with the HDS.

   Is DTC P0AE1 (62) indicated?

   YES—Go to step 5.

   NO—Intermittent failure, the system is OK at this time. Check for poor connections or loose terminals at the junctions board, the DC-DC converter, the MCM, and the BCM module.■

5. Turn the ignition switch to LOCK (0).

6. Turn the battery module switch OFF (see page 12-4).

7. Remove the IPU lid (see page 12-180).

(cont'd)

DTC Troubleshooting (cont'd)

8. Check the busbars (A) on the DC-DC converter and the MCM for bending or damaged insulation.

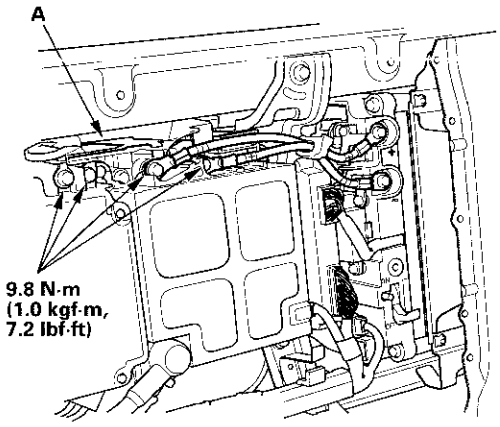

Are the busbars OK?

YES—Go to step 9.

NO—Replace the busbar, then go to step 29.

9. Clear the DTC with the HDS (see page 12-6).

10. Turn the battery module switch ON (see page 12-4).

NOTE: Put on gloves to protect your hands from electrical shock.

11. Turn the ignition switch to ON (II), and listen for a clicking sound from the relay inside the battery module.

Is there a clicking sound?

YES—Go to step 12.

NO—Go to step 19.

12. Clear the DTC with the HDS (see page 12-6).

13. Turn the ignition switch to LOCK (0).

14. Turn the ignition switch to ON (II), then measure the voltage between the battery module terminals (A).

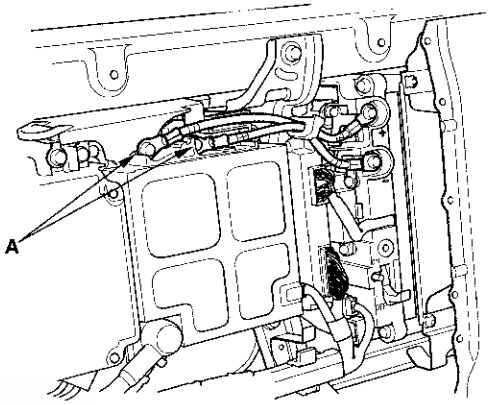

Is there momentary voltage when the ignition switch is turned to ON (II)?

YES—Go to step 15.

NO—Replace the battery module (see page 12-187), then go to step 30.

15. Turn the ignition switch to LOCK (0).

16. Remove the DC-DC converter (see page 12-182).

17. Clear the DTC with the HDS (see page 12-6).

18. Check for Temporary DTCs or DTCs with the HDS.

Is DTC P0AE1 (62) indicated?

YES—Go to step 42.

NO—Replace the DC-DC converter (see page 12-182), then go to step 30.

19. Disconnect BCM module connector A (40P).

20. Measure the resistance between BCM module connector terminals A13 and A28.

BCM MODULE CONNECTOR A (40P)

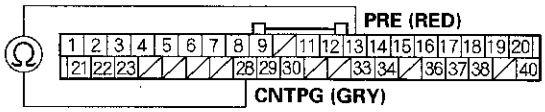

Wire side of female terminals

Is there 92.7 – 113.3 Ω ?

YES—Go to step 26.

NO—Go to step 21.

21. Measure the resistance between BCM module connector terminals A13 and A28.

BCM MODULE CONNECTOR A (40P)

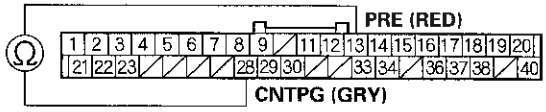

Wire side of female terminals

Is it lower (NO) or higher (YES) than a 92.7 – 113.3 Ω ?

YES—Go to step 24.

NO—Go to step 22.

22. Disconnect the junction board 12P connector.

23. Check for continuity between BCM module connector terminals A13 and A28.

BCM MODULE CONNECTOR A (40P)

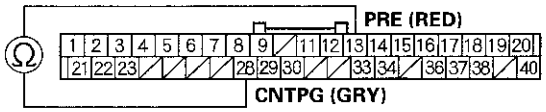

Wire side of female terminals

Is there continuity?

YES—Repair short in the wire between the junction board 12P connector and the BCM module (No. 13, No. 28), then go to step 30.

NO—Replace the battery module (see page 12-187), then go to step 30.

24. Disconnect the junction board 12P connector.

(cont'd)

DTC Troubleshooting (cont'd)

25. Check for continuity between these terminals:

    - BCM module connector terminal A13 and junction board 12P connector terminal No. 7.
    - BCM module connector terminal A28 and junction board 12P connector terminal No. 2.

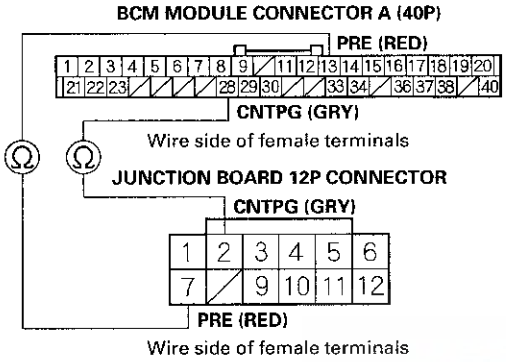

Is there continuity?

YES—Replace the battery module (see page 12-187), then go to step 30.

NO—Repair open in the wire between the junction board 12P connector and the BCM module (A13, A28), then go to step 30.

26. Check for continuity between BCM module connector terminal A13 and body ground.

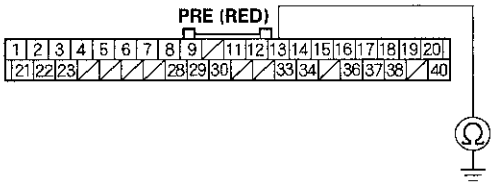

Is there continuity?

YES—Go to step 27.

NO—Check for poor connections or loose terminals at the junction board and the BCM module, then go to step 36.

27. Disconnect the junction board 12P connector.

28. Check for continuity between BCM module connector terminal A13 and body ground.

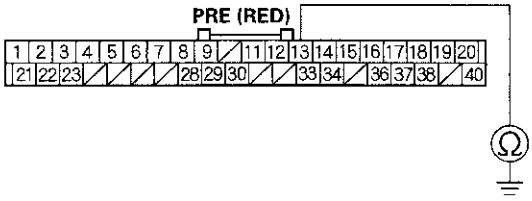

Is there continuity?

YES—Repair short in the wire between the junction board 12P connector and the BCM module (A13), then go to step 30.

NO—Replace the battery module (see page 12-187).

29. Turn the ignition switch to LOCK (0).

30. Reconnect all connectors.

31. Reinstall the IPU lid (see page 12-180), then turn the battery module switch ON (see page 12-4).

32. Turn the ignition switch to ON (II).

33. Clear the DTC with the HDS (see page 12-6).

34. Check for Temporary DTCs or DTCs with the HDS.

    Is DTC P0AE1 (62) indicated?

    YES—Check for poor connections or loose terminals at the high voltage connector, the bypass contactor, the DC-DC converter, the MCM, and the BCM module, then go to step 1.

    NO—Go to step 35.

35. Monitor the OBD STATUS for DTC P0AE1 (62) in the DTCs MENU with the HDS.

    Does the screen indicate PASSED?

    YES—Troubleshooting is complete. If any other Temporary DTCs or DTCs were indicated in step 34, go to the indicated DTC's troubleshooting.■

    NO—If the screen indicates FAILED, check for poor connections or loose terminals at the high voltage connector, the bypass contactor, the DC-DC converter, the MCM, and the BCM module, then go to step 1. If the screen indicates NOT COMPLETED, keep the ignition switch ON (II) until a result comes on.

36. Reconnect all connectors.

37. Reinstall the IPU lid (see page 12-180), then turn the battery module switch ON (see page 12-4).

38. Update the BCM module if it does not have the latest software (see page 12-181), or substitute a known-good BCM module (see page 12-8).

39. Clear the DTC with the HDS (see page 12-6).

40. Check for Temporary DTCs or DTCs with the HDS.

    Is DTC P0AE1 (62) indicated?

    YES—Check for poor connections or loose terminals at the high voltage connector, the bypass contactor, the DC-DC converter, the MCM, and the BCM module. If the BCM module was updated, substitute a known-good BCM module (see page 12-8), then recheck. If the BCM module was substituted, go to step 42.

    NO—Go to step 41.

41. Monitor the OBD STATUS for DTC P0AE1 (62) in the DTCs MENU with the HDS.

    Does the screen indicate PASSED?

    YES—If the BCM module was updated, troubleshooting is complete. If the BCM module was substituted, replace the original BCM module (see page 12-182). If any other Temporary DTCs or DTCs were indicated in step 40, go to the indicated DTC's troubleshooting.■

    NO—If the screen indicates FAILED, check for poor connections or loose terminals at the high voltage connector, the bypass contactor, the DC-DC converter, the MCM, and the BCM module. If the BCM module was updated, substitute a known-good BCM module (see page 12-8), then recheck. If the BCM module was substituted, go to step 42. If the screen indicates NOT COMPLETED, keep the ignition switch ON (II) until a result comes on.

42. Update the MCM if it does not have the latest software (see page 12-185), or substitute a known-good MCM (see page 12-8).

43. Clear the DTC with the HDS (see page 12-6).

(cont'd)

DTC Troubleshooting (cont'd)

44. Check for Temporary DTCs or DTCs with the HDS.

    Is DTC P0AE1 (62) indicated?

    YES—Check for poor connections or loose terminals at the high voltage connector, the bypass contactor, the DC-DC converter, the MCM, and the BCM module. If the MCM was updated, substitute a known-good MCM (see page 12-8), then recheck. If the MCM was substituted, go to step 1.

    NO—Go to step 45.

45. Monitor the OBD STATUS for DTC P0AE1 (62) in the DTCs MENU with the HDS.

    Does the screen indicate PASSED?

    YES—If the MCM was updated, troubleshooting is complete. If the MCM was substituted, replace the original MCM (see page 12-186). If any other Temporary DTCs or DTCs were indicated in step 44, go to the indicated DTC's troubleshooting. ■

    NO—If the screen indicates FAILED, check for poor connections or loose terminals at the high voltage connector, the bypass contactor, the DC-DC converter, the MCM, and the BCM module. If the MCM was updated, substitute a known-good MCM (see page 12-8), then recheck. If the MCM was substituted, go to step 1. If the screen indicates NOT COMPLETED, keep the ignition switch ON (II) until a result comes on.

DTC P0AEE (109): MCM Internal Circuit Malfunction

NOTE: Before you troubleshoot, record all freeze data, and review the general troubleshooting information (see page 12-5).

1. Turn the ignition switch to ON (II).
2. Note the value of the MPI TEMPERATURE in the DATA LIST with the HDS.
3. Start and stop the engine five times.
4. Check the MPI TEMPERATURE in the DATA LIST with the HDS.

   Does the MPI TEMPERATURE increase by 1.0 °F (0.5 °C) or more?

   YES—Intermittent failure, the system is OK at this time.

   NO—Go to step 5.

5. Update the MCM if it does not have the latest software (see page 12-185), or substitute a known-good MCM (see page 12-8).
6. Check for Temporary DTCs or DTCs with the HDS.

   Is DTC P0AEE (109) indicated?

   YES—Check for poor connections or loose terminals at the MCM. If the MCM was updated, substitute a known-good MCM (see page 12-8), then recheck. If the MCM was substituted, go to step 1.

   NO—Go to step 7.

7. Monitor the OBD STATUS for DTC P0AEE (109) in the DTCs MENU with the HDS.

   Does the screen indicate PASSED?

   YES—If the MCM was updated, troubleshooting is complete. If the MCM was substituted, replace the original MCM (see page 12-186). If any other Temporary DTCs or DTCs were indicated in step 6, go to the indicated DTC's troubleshooting.■

   NO—If the screen indicates FAILED, check for poor connections or loose terminals at the MCM. If the MCM was updated, substitute a known-good MCM (see page 12-8), then recheck. If the MCM was substituted, go to step 1. If the screen indicates NOT COMPLETED, keep the ignition switch ON (II) until a result comes on.

DTC P0AEF (110): MCM Internal Temperature Sensor Circuit Low Voltage

NOTE: Before you troubleshoot, record all freeze data, and review the general troubleshooting information (see page 12-5).

1. Turn the ignition switch to ON (II).

2. Check the MPI VOLTAGE (MPI TEMPERATURE) in the DATA LIST with the HDS.

   Is there less than 1.79 V (13 °F (25 °C))?

   YES—Intermittent failure, the system is OK at this time.

   NO—Go to step 3.

3. Update the MCM if it does not have the latest software (see page 12-185), or substitute a known-good MCM (see page 12-8).

4. Check for Temporary DTCs or DTCs with the HDS.

   Is DTC P0AEF (110) indicated?

   YES—Check for poor connections or loose terminals at the MCM. If the MCM was updated, substitute a known-good MCM (see page 12-8), then recheck. If the MCM was substituted, go to step 1.

   NO—Go to step 5.

5. Monitor the OBD STATUS for DTC P0AEF (110) in the DTCs MENU with the HDS.

   Does the screen indicate PASSED?

   YES—If the MCM was updated, troubleshooting is complete. If the MCM was substituted, replace the original MCM (see page 12-186). If any other Temporary DTCs or DTCs were indicated in step 4, go to the indicated DTC's troubleshooting.■

   NO—If the screen indicates FAILED, check for poor connections or loose terminals at the MCM. If the MCM was updated, substitute a known-good MCM (see page 12-8), then recheck. If the MCM was substituted, go to step 1. If the screen indicates NOT COMPLETED, keep the ignition switch ON (II) until a result comes on.

DTC Troubleshooting (cont'd)

DTC P0AF0 (111): MCM Internal Temperature Sensor Circuit High Voltage

NOTE: Before you troubleshoot, record all freeze data, and review the general troubleshooting information (see page 12-5).

1. Turn the ignition switch to ON (II).

2. Check the MPI VOLTAGE (MPI TEMPERATURE) in the DATA LIST with the HDS.

   Is there more than 4.64 V (338 °F (170 °C))?

   YES—Intermittent failure, the system is OK at this time.

   NO—Go to step 3.

3. Update the MCM if it does not have the latest software (see page 12-185), or substitute a known-good MCM (see page 12-8).

4. Check for Temporary DTCs or DTCs with the HDS.

   Is DTC P0AF0 (111) indicated?

   YES—Check for poor connections or loose terminals at the MCM. If the MCM was updated, substitute a known-good MCM (see page 12-8), then recheck. If the MCM was substituted, go to step 1.

   NO—Go to step 5.

5. Monitor the OBD STATUS for DTC P0AF0 (111) in the DTCs MENU with the HDS.

   Does the screen indicate PASSED?

   YES—If the MCM was updated, troubleshooting is complete. If the MCM was substituted, replace the original MCM (see page 12-186). If any other Temporary DTCs or DTCs were indicated in step 4, go to the indicated DTC's troubleshooting. ■

   NO—If the screen indicates FAILED, check for poor connections or loose terminals at the MCM. If the MCM was updated, substitute a known-good MCM (see page 12-8), then recheck. If the MCM was substituted, go to step 1. If the screen indicates NOT COMPLETED, keep the ignition switch ON (II) until a result comes on.

DTC P1435 (58): Charge/Discharge Balance Malfunction

NOTE:
- Before you troubleshoot, record all freeze data, and review the general troubleshooting information (see page 12-5).
- If the 12 V battery is very low, or there is a problem in the charging system, DTC P1435 (58) may be stored, and the charging system indicator may come on.

1. Turn the ignition switch to ON (II).

2. Check for Temporary DTCs or DTCs in the PGM-FI SYSTEM with the HDS.

   Are any Temporary DTCs or DTCs indicated?

   YES—Go to the indicated DTC's troubleshooting.

   NO—Go to step 3.

3. Connect a known-good 12 V battery to the 12 V battery.

4. Start the engine, and let it idle for 2 minutes.

5. Check under these conditions:

   - Headlights on high beam
   - Blower fan at maximum speed
   - Rear window defogger on

6. Check the IMA BATTERY MODULE 1 VOLTAGE through IMA BATTERY MODULE 11 VOLTAGE in the DATA LIST with the HDS.

   Is more than 8 V indicated in all modules?

   YES—Temporary lack of charging. The system is OK at this time. Start the engine, and hold it between 3,500 rpm and 4,000 rpm without load (in P or N) until the IMA battery level gauge (BAT) displays at least three segments. ■

   NO—Charge and/or replace the 12 V battery. Turn the ignition switch to ON (II), start the engine, and watch the charging system indicator. If the charging system indicator comes on and then goes off after the engine starts, the system is OK at this time. Hold the engine speed between 3,500 and 4,000 rpm without load (in P or N) until the IMA battery level gauge (BAT) displays at least three segments. ■

DTC P1437 (41): MCM Circuit Shorted

NOTE:
- Before you troubleshoot, record all freeze data, and review the general troubleshooting information (see page 12-5).
- Information marked with an asterisk (*) applies to the '06-07 models.

1. Turn the ignition switch to ON (II).

2. Check for Temporary DTCs or DTCs with the HDS.

   Is DTC P0AA6 (59), P1440 (57), or P15A5 (85) indicated?

   YES—Go to the indicated DTC's troubleshooting.

   NO—Go to step 3.

3. Turn the ignition switch to LOCK (0), and wait 1 minute.

4. Start the engine, and let it idle.

5. Monitor the OBD STATUS for DTC P1437 (41) in the DTCs MENU with the HDS.

   Does the screen indicate FAILED?

   YES—Go to step 6.

   NO—If the screen indicates PASSED, intermittent failure, the system is OK at this time. Check for poor connections or loose terminals at the MCM. If the screen indicates NOT COMPLETED, go to step 1.

6. Turn the ignition switch to LOCK (0).

7. Turn the battery module switch OFF (see page 12-4).

8. Remove the IPU lid (see page 12-180).

9. Remove the BCM module (see page 12-182).

10. Disconnect the MCM 20P connector.

11. Connect the BCM module connectors.

(cont'd)

DTC Troubleshooting (cont'd)

12. Turn the ignition switch to ON (II), then measure the voltage between MCM 20P connector terminal No. 18, No. 19* and body ground within 1 second.

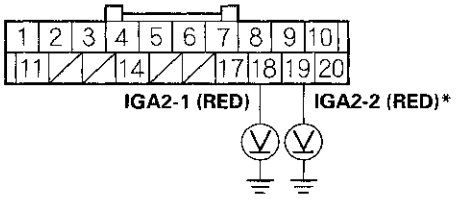

Wire side of female terminals

Is there battery voltage on both terminals?

YES—Go to step 22.

NO—
- Repair the connection in the MCM connector, then go to step 13.
- Repair open or short in the wire between the No. 61 +B IMA 2 (10 A) fuse, MCM relay 2, and the MCM, then go to step 13.

13. Turn the ignition switch to LOCK (0).

14. Reconnect all connectors.

15. Reinstall the IPU lid (see page 12-180), then turn the battery module switch ON (see page 12-4).

16. Turn the ignition switch to ON (II).

17. Clear the DTC with the HDS (see page 12-6).

18. Turn the ignition switch to LOCK (0), and wait 1 minute.

19. Start the engine, and let it idle.

20. Check for Temporary DTCs or DTCs with the HDS.

Is DTC P1437 (41) indicated?

YES—Check for poor connections or loose terminals at the MCM, then go to step 1.

NO—Go to step 21.

21. Monitor the OBD STATUS for DTC P1437 (41) in the DTCs MENU with the HDS.

Does the screen indicate PASSED?

YES—Troubleshooting is complete. If any other Temporary DTCs or DTCs were indicated in step 20, go to the indicated DTC's troubleshooting. ■

NO—If the screen indicates FAILED, check for poor connections or loose terminals at the DC-DC converter and the MCM, then go to step 1. If the screen indicates NOT COMPLETED, keep the ignition switch ON (II) until a result comes on.

22. Turn the ignition switch to LOCK (0).

23. Reconnect all connectors.

24. Reinstall the IPU lid (see page 12-180), then turn the battery module switch ON (see page 12-4).

25. Update the MCM if it does not have the latest software (see page 12-185), or substitute a known-good MCM (see page 12-8).

26. Turn the ignition switch to LOCK (0), and wait 1 minute.

27. Start the engine, and let it idle.

28. Check for Temporary DTCs or DTCs with the HDS.

Is DTC P1437 (41) indicated?

YES—Check for poor connections or loose terminals at DC-DC converter and the MCM. If the MCM was updated, substitute a known-good MCM (see page 12-8), then recheck. If the MCM was substituted, go to step 1.

NO—Go to step 29.

29. Monitor the OBD STATUS for DTC P1437 (41) in the DTCs MENU with the HDS.

    Does the screen indicate PASSED?

    YES—If the MCM was updated, troubleshooting is complete. If the MCM was substituted, replace the original MCM (see page 12-186). If any other Temporary DTCs or DTCs were indicated in step 28, go to the indicated DTC's troubleshooting. ■

    NO—If the screen indicates FAILED, check for poor connections or loose terminals at DC-DC converter and the MCM. If the MCM was updated, substitute a known-good MCM (see page 12-8), then recheck. If the MCM was substituted, go to step 1. If the screen indicates NOT COMPLETED, keep the ignition switch ON (II) until a result comes on.

DTC P1440 (57): MCM Circuit Malfunction

NOTE:
- Before you troubleshoot, record all freeze data, and review the general troubleshooting information (see page 12-5).
- If the DTCs listed below are stored at the same time as DTC P1440 (57), troubleshoot DTC P1440 (57) first, then recheck for those DTCs.

- P0A5E (24), P0A5F (25): U Phase Motor Current Sensor Circuit Low/High Voltage
- P0A61 (26), P0A62 (27): V Phase Motor Current Sensor Circuit Low/High Voltage
- P0A64 (28), P0A65 (29): W Phase Motor Current Sensor Circuit Low/High Voltage
- P1437 (41): MCM Short Circuit
- P1585 (30): Motor Current Sensor Circuit Malfunction
- P1586 (23): Battery Current Signal Circuit Problem
- P15A5 (85): Motor Current Sensor Circuit Malfunction
- P15A6 (86): U Phase Motor Current Sensor Circuit Malfunction
- P15A7 (87): V Phase Motor Current Sensor Circuit Malfunction
- P15A8 (88): W Phase Motor Current Sensor Circuit Malfunction

1. Start the engine, and let it idle for 1 minute.

2. Turn the headlights on high beam.

3. Monitor the OBD STATUS for DTC P1440 (57) in the DTCs MENU with the HDS.

   Does the screen indicate FAILED?

   YES—Go to step 4.

   NO—If the screen indicates PASSED, intermittent failure, the system is OK at this time. Check for poor connections or loose terminals at the MCM and the motor stator. If the screen indicates NOT COMPLETED, go to step 1.

4. Turn the ignition switch to LOCK (0).

5. Turn the battery module switch OFF (see page 12-4).

(cont'd)

DTC Troubleshooting (cont'd)

6. Check the motor power cable connection (A) at the motor stator.

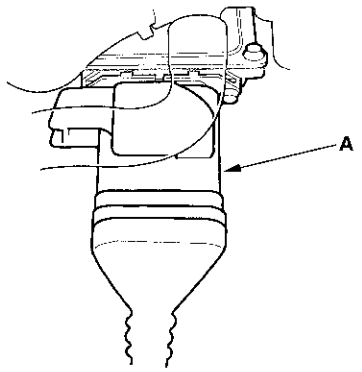

Is the connection OK?

YES—Go to step 7.

NO—Repair the connection, then go to step 24.

7. Remove the IPU lid (see page 12-180).

8. Check the MCM (A) and the BCM module (B) connections.

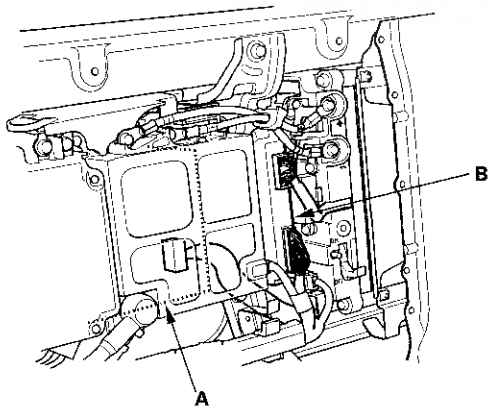

Are the connections OK?

YES—Go to step 9.

NO—Repair the connections, then go to step 22.

9. Raise the harness holder. Remove the PDU cover (A).

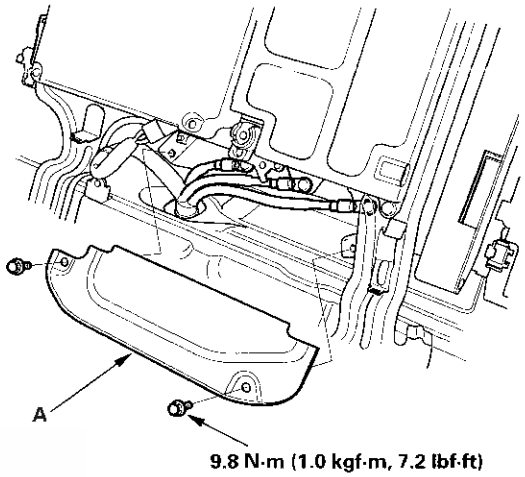

10. Check the motor power cable connection at the MCM.

Is the connection OK?

YES—Go to step 11.

NO—Repair the connection, then go to step 22.

11. Remove the motor power cables (A) from the MCM.

NOTE: Wrap the motor power cables with insulating tape.

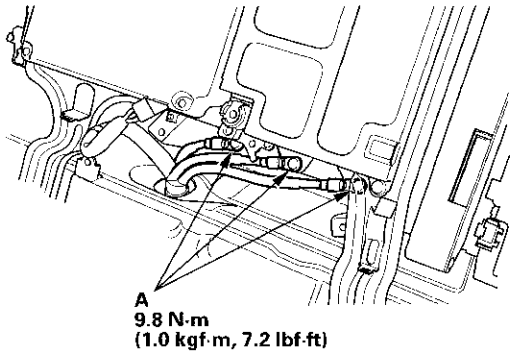

12. Check for continuity between motor power cables A and B, B and C, and C and A.

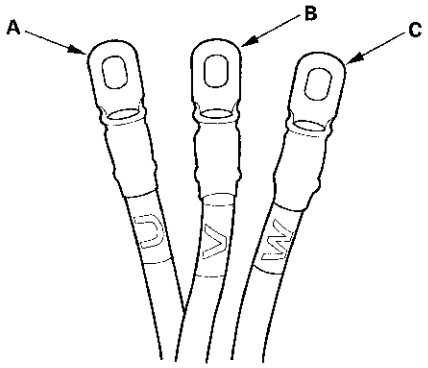

Is there continuity?

YES—Go to step 15.

NO—Go to step 13.

13. Disconnect the motor power cable connector (A) (see page 12-3).

NOTE:
- Disconnecting the motor power cable connector from the motor stator (see page 12-3).
- If the motor power cable terminals are wet, dry them with a clean towel. Do not use compressed air.

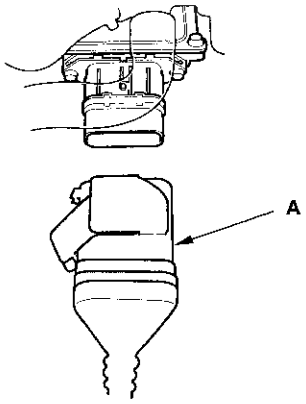

14. Check for continuity between motor power cable terminals A and B, B and C, and C and A individually.

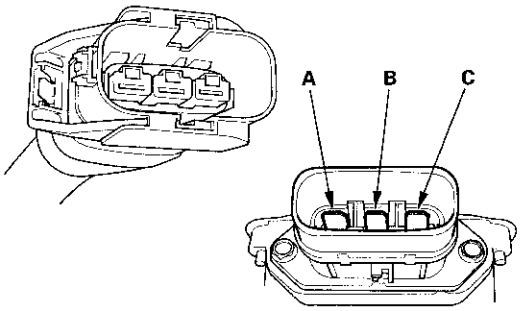

Is there continuity?

YES—Replace the motor power cables (see page 12-189), then go to step 22.

NO—Replace the motor stator (see page 12-195), then go to step 22.

15. Reconnect the motor power cable connector.

(cont'd)

DTC Troubleshooting (cont'd)

16. Start the engine, and let it idle. Then measure the voltage between these terminals with an AC voltmeter:

    - The U phase terminal (A) and V phase terminal (B).
    - The W phase terminal (C) and V phase terminal (B).
    - The U phase terminal (A) and W phase terminal (C).

    NOTE:
    - When using clamp-type voltmeter leads, be careful not to touch any other terminals.
    - Turn the battery module switch OFF.

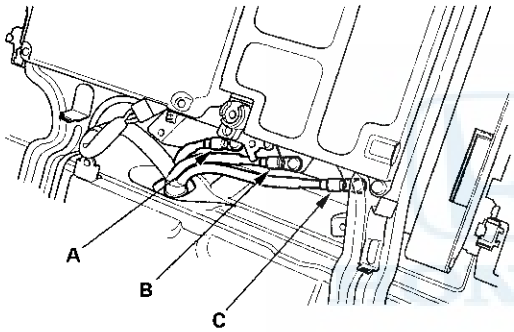

Is each measurement about 27—48 V?

YES—Go to step 30.

NO—Go to step 17.

17. Turn the ignition switch to LOCK (0).

18. Remove the motor power cable from the MCM.

19. Turn the ignition switch to ON (II).

20. Check for continuity between these terminals:

U terminal (A)	→|←	Junction board −terminal (D)
V terminal (B)	→|←	Junction board −terminal (D)
W terminal (C)	→|←	Junction board −terminal (D)
Junction board +terminal (E)	→|←	U terminal (A)
Junction board +terminal (E)	→|←	V terminal (B)
Junction board +terminal (E)	→|←	W terminal (C)

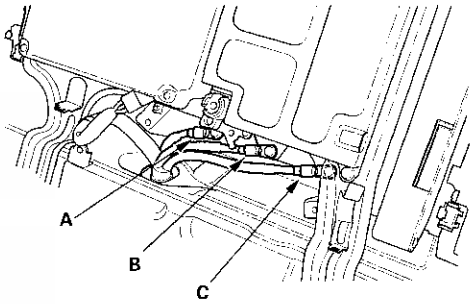

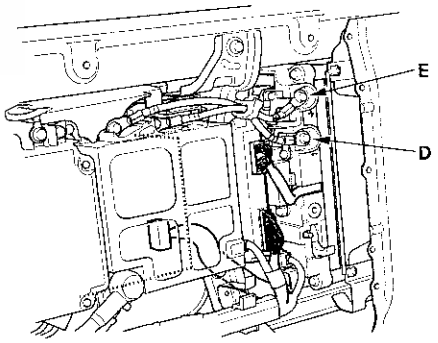

Is there continuity?

YES—Go to step 30.

NO—Replace the motor rotor (see page 12-192), then go to step 21.

21. Turn the ignition switch to LOCK (0).

22. Reconnect all connectors.

23. Reinstall the IPU lid (see page 12-180), then turn the battery module switch ON (see page 12-4).

24. Turn the ignition switch to ON (II).

25. Clear the DTC with the HDS (see page 12-6).

26. Start the engine, and let it idle for 1 minute.

27. Turn the headlights on high beam.

28. Check for Temporary DTCs or DTCs with the HDS.

    Is DTC P1440 (57) indicated?

    YES—Check for poor connections or loose terminals at the MCM and the motor stator, then go to step 1.

    NO—Go to step 29.

29. Monitor the OBD STATUS for DTC P1440 (57) in the DTCs MENU with the HDS.

    Does the screen indicate PASSED?

    YES—Troubleshooting is complete. If any other Temporary DTCs or DTCs were indicated in step 28, go to the indicated DTC's troubleshooting. ■

    NO—If the screen indicates FAILED, check for poor connections or loose terminals at the MCM and the motor stator, then go to step 1. If the screen indicates NOT COMPLETED, go to step 26.

30. Turn the ignition switch to LOCK (0).

31. Reconnect all connectors.

32. Reinstall the IPU lid (see page 12-180), then turn the battery module switch ON (see page 12-4).

33. Update the MCM if it does not have the latest software (see page 12-185), or substitute a known-good MCM (see page 12-8).

34. Start the engine, and let it idle for 1 minute.

35. Turn the headlights on high beam.

36. Check for Temporary DTCs or DTCs with the HDS.

    Is DTC P1440 (57) indicated?

    YES—Check for poor connections or loose terminals at the MCM and the motor stator. If the MCM was updated, substitute a known-good MCM and motor stator (see page 12-8), then go to step 34. If the MCM was substituted, go to step 1.

    NO—Go to step 37.

37. Monitor the OBD STATUS for DTC P1440 (57) in the DTCs MENU with the HDS.

    Does the screen indicate PASSED?

    YES—If the MCM was updated, troubleshooting is complete. If the MCM was substituted, replace the original MCM (see page 12-186). If any other Temporary DTCs or DTCs were indicated in step 36, go to the indicated DTC's troubleshooting. ■

    NO—If the screen indicates FAILED, check for poor connections or loose terminals at the MCM and the motor stator. If the MCM was updated, substitute a known-good MCM (see page 12-8), then go to step 34. If the MCM was substituted, go to step 1. If the screen indicates NOT COMPLETED, go to step 34.

DTC Troubleshooting (cont'd)

DTC P1446 (74): Battery Module Individual Voltage Input Deviation

NOTE: Before you troubleshoot, record all freeze data, and review the general troubleshooting information (see page 12-5).

1. Turn the ignition switch to ON (II).

2. Check for Temporary DTCs or DTCs with the HDS.

   Is DTC P0A7F (78) indicated?

   YES—Do the troubleshooting for DTC P0A7F (78) (see page 12-65).

   NO—Go to step 3.

3. Start the engine, and wait for 1 minute.

4. Monitor the OBD STATUS for DTC P1446 (74) in the DTCs MENU with the HDS.

   Does the screen indicate FAILED?

   YES—Go to step 5.

   NO—If the screen indicates PASSED, intermittent failure, the system is OK at this time. Check for poor connections or loose terminals at the battery module and the BCM module. If the screen indicates NOT COMPLETED, go to step 1.

5. Record the value of the IMA BATTERY MODULE 1 VOLTAGE through the IMA BATTERY MODULE 11 VOLTAGE in the DATA LIST with the HDS.

6. Turn the ignition switch to LOCK (0).

7. Turn the battery module switch OFF (see page 12-4).

8. Remove the IPU lid (see page 12-180).

9. Disconnect BCM module connector B (14P).

10. Using the IMA BATTERY MODULE VOLTAGES you noted in step 5, compare the voltages between the following BCM module connector terminals and the listed IMA BATTERY MODULE VOLTAGES in the DATA LIST with the HDS.

    - B6 and B14, compared to IMA BATTERY MODULE 1 VOLTAGE
    - B14 and B5, compared to IMA BATTERY MODULE 2 VOLTAGE
    - B5 and B13, compared to IMA BATTERY MODULE 3 VOLTAGE
    - B13 and B4, compared to IMA BATTERY MODULE 4 VOLTAGE
    - B4 and B12, compared to IMA BATTERY MODULE 5 VOLTAGE
    - B12 and B11, compared to IMA BATTERY MODULE 6 VOLTAGE
    - B7 and B1, compared to IMA BATTERY MODULE 7 VOLTAGE
    - B1 and B8, compared to IMA BATTERY MODULE 8 VOLTAGE
    - B8 and B2, compared to IMA BATTERY MODULE 9 VOLTAGE
    - B2 and B9, compared to IMA BATTERY MODULE 10 VOLTAGE
    - B9 and B3, compared to IMA BATTERY MODULE 11 VOLTAGE

BCM MODULE CONNECTOR B (14P)

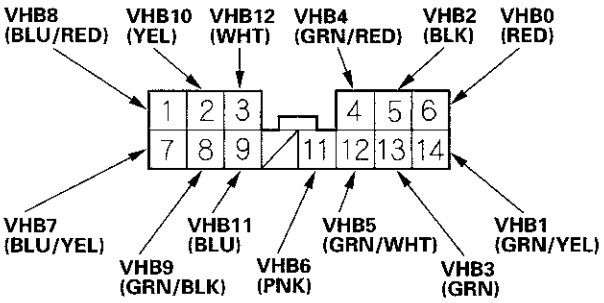

Wire side of female terminals

Is there more than 1 V difference between the BCM module measurements and the DATA LIST measurements?

YES—Go to step 19.

NO—Replace the battery module (see page 12-187), then go to step 11.

11. Turn the ignition switch to LOCK (0).

12. Reconnect all connectors.

13. Reinstall the IPU lid (see page 12-180), then turn the battery module switch ON (see page 12-4).

14. Turn the ignition switch to ON (II).

15. Clear the DTC with the HDS (see page 12-6).

16. Start the engine, and wait for 1 minute.

17. Check for Temporary DTCs or DTCs with the HDS.

    Is DTC P1446 (74) indicated?

    YES—Check for poor connections or loose terminals at the battery module and the BCM module, then go to step 1.

    NO—Go to step 18.

18. Monitor the OBD STATUS for DTC P1446 (74) in the DTCs MENU with the HDS.

    Does the screen indicate PASSED?

    YES—Troubleshooting is complete. If any other Temporary DTCs or DTCs were indicated in step 17, go to the indicated DTC's troubleshooting. ■

    NO—If the screen indicates FAILED, check for poor connections or loose terminals at the battery module and the BCM module, then go to step 1. If the screen indicates NOT COMPLETED, go to step 16.

19. Turn the ignition switch to LOCK (0).

20. Reconnect all connectors.

21. Reinstall the IPU lid (see page 12-180), then turn the battery module switch ON (see page 12-4).

22. Update the BCM module if it does not have the latest software (see page 12-181), or substitute a known-good BCM module (see page 12-8).

23. Start the engine, and wait for 1 minute.

24. Check for Temporary DTCs or DTCs with the HDS.

    Is DTC P1446 (74) indicated?

    YES—Check for poor connections or loose terminals at the battery module and the BCM module. If the BCM module was updated, substitute a known-good BCM module (see page 12-8), then go to step 23. If the BCM module was substituted, go to step 1.

    NO—Go to step 25.

25. Monitor the OBD STATUS for DTC P1446 (74) in the DTCs MENU with the HDS.

    Does the screen indicate PASSED?

    YES—If the BCM module was updated, troubleshooting is complete. If the BCM module was substituted, replace the original BCM module (see page 12-182). If any other Temporary DTCs or DTCs were indicated in step 24, go to the indicated DTC's troubleshooting. ■

    NO—If the screen indicates FAILED, check for poor connections or loose terminals at the battery module and the BCM module. If the BCM module was updated, substitute a known-good BCM module (see page 12-8), then go to step 23. If the BCM module was substituted, go to step 1. If the screen indicates NOT COMPLETED, go to step 23.

DTC Troubleshooting (cont'd)

DTC P1448 (63): IPU Module Fan Problem

NOTE: Before you troubleshoot, record all freeze data, and review the general troubleshooting information (see page 12-5).

1. Turn the ignition switch to ON (II).
2. Check for Temporary DTCs or DTCs with the HDS.

   Is DTC P0A78 (32) indicated?

   YES—Do the troubleshooting for DTC P0A78 (32) (see page 12-64).

   NO—Go to step 3.
3. Clear the DTC with the HDS (see page 12-6).
4. Do the IPU MODULE FAN DRIVE in the INSPECTION MENU with the HDS.

   Does the screen indicate OUT OF RANGE?

   YES—Go to step 5.

   NO—If the screen indicates CONDITION IS NORMAL, intermittent failure, the system is OK at this time. Check for poor connections or loose terminals at the IPU module fan and the BCM module.■
5. Turn the ignition switch to LOCK (0).
6. Turn the battery module switch OFF (see page 12-4).
7. Remove the IPU lid (see page 12-180).
8. Disconnect the IPU module fan 4P connector.
9. Disconnect BCM module connector A (40P).
10. Connect IPU module fan 4P connector terminal No. 3 to body ground with a jumper wire.

IPU MODULE FAN 4P CONNECTOR

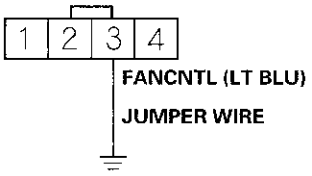

Wire side of female terminals

11. Check for continuity between BCM module connector terminal A30 and body ground.

BCM MODULE CONNECTOR A (40P)

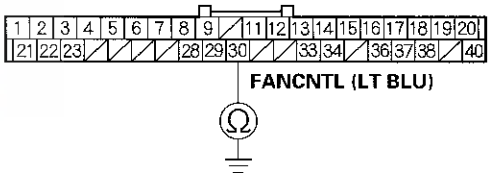

Wire side of female terminals

Is there continuity?

YES—Go to step 12.

NO—Repair open in the wire between the IPU module fan and the BCM module (A30), then go to step 26.

12. Disconnect the jumper wire from the IPU module fan 4P connector.

13. Check for continuity between BCM module connector terminal A17 and body ground.

BCM MODULE CONNECTOR A (40P)

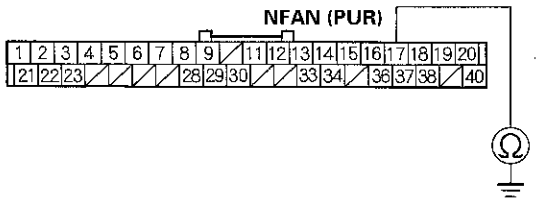

Wire side of female terminals

Is there continuity?

YES—Repair short in the wire between the IPU module fan and the BCM module (A17), then go to step 25.

NO—Go to step 14.

14. Connect IPU module fan 4P connector terminal No. 2 to body ground with a jumper wire.

IPU MODULE FAN 4P CONNECTOR

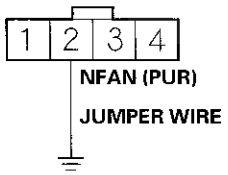

Wire side of female terminals

15. Check for continuity between BCM module connector terminal A17 and body ground.

BCM MODULE CONNECTOR A (40P)

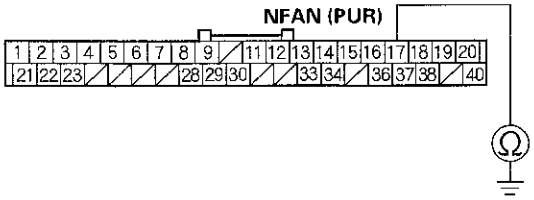

Wire side of female terminals

Is there continuity?

YES—Go to step 16.

NO—Repair open in the wire between the IPU module fan and the BCM module (A17), then go to step 25.

16. Disconnect the jumper wire from the IPU module fan 4P connector.

17. Check for continuity between IPU module fan 4P connector terminal No. 4 and body ground.

IPU MODULE FAN 4P CONNECTOR

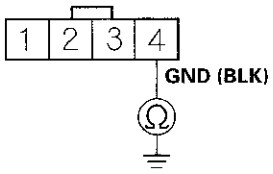

Wire side of female terminals

Is there continuity?

YES—Go to step 18.

NO—Repair open in the wire between the IPU module fan and G902, then go to step 25.

(cont'd)

DTC Troubleshooting (cont'd)

18. Reconnect BCM module connector A (40P).

19. Turn the ignition switch to ON (II).

20. Measure the voltage between IPU module fan 4P connector terminal No. 1 and body ground.

IPU MODULE FAN 4P CONNECTOR

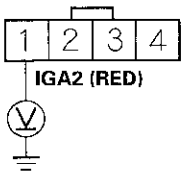

Wire side of female terminals

Is there battery voltage?

YES—Go to step 21.

NO—Repair open in the wire between the IPU module fan and MCM relay 2, then go to step 25.

21. Turn the ignition switch to LOCK (0).

22. Connect IPU module fan 4P connector terminals No. 2 and No. 3 with a jumper wire.

IPU MODULE FAN 4P CONNECTOR

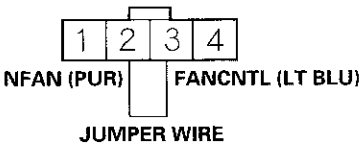

Wire side of female terminals

23. Turn the ignition switch to ON (II).

24. Do the IPU MODULE FAN DRIVE in the INSPECTION MENU with the HDS.

Does the screen indicate OUT OF RANGE?

YES—Go to step 32.

NO—If screen indicates CONDITION IS NORMAL, replace the IPU module fan (see page 12-188), then go to step 25.

25. Turn the ignition switch to LOCK (0).

26. Reconnect all connectors.

27. Reinstall the IPU lid (see page 12-180), then turn the battery module switch ON (see page 12-4).

28. Turn the ignition switch to ON (II).

29. Clear the DTC with the HDS (see page 12-6).

30. Check for Temporary DTCs or DTCs with the HDS.

Is DTC P1448 (63) indicated?

YES—Check for poor connections or loose terminals at the IPU module fan and the BCM module, then go to step 1.

NO—Go to step 31.

31. Monitor the OBD STATUS for DTC P1448 (63) in the DTCs MENU with the HDS.

Does the screen indicate PASSED?

YES—Troubleshooting is complete. If any other Temporary DTCs or DTCs were indicated in step 30, go to the indicated DTC's troubleshooting. ■

NO—If the screen indicates FAILED, check for poor connections or loose terminals at the IPU module fan and the BCM module, then go to step 1. If the screen indicates NOT COMPLETED, keep the ignition switch ON (II) until a result comes on.

32. Turn the ignition switch to LOCK (0).

33. Reconnect all connectors.

34. Reinstall the IPU lid (see page 12-180), then turn the battery module switch ON (see page 12-4).

35. Update the BCM module if it does not have the latest software (see page 12-181), or substitute a known-good BCM module (see page 12-8).

36. Check for Temporary DTCs or DTCs with the HDS.

    Is DTC P1448 (63) indicated?

    YES—Check for poor connections or loose terminals at the IPU module fan and the BCM module. If the BCM module was updated, substitute a known-good BCM module (see page 12-8), then recheck. If the BCM module was substituted, go to step 1.

    NO—Go to step 37.

37. Monitor the OBD STATUS for DTC P1448 (63) in the DTCs MENU with the HDS.

    Does the screen indicate PASSED?

    YES—If the BCM module was updated, troubleshooting is complete. If the BCM module was substituted, replace the original BCM module (see page 12-182). If any other Temporary DTCs or DTCs were indicated in step 36, go to the indicated DTC's troubleshooting.■

    NO—If the screen indicates FAILED, check for poor connections or loose terminals at IPU module fan and the BCM module. If the BCM module was updated, substitute a known-good BCM module (see page 12-8), then recheck. If the BCM module was substituted, go to step 1. If the screen indicates NOT COMPLETED, keep the ignition switch ON (II) until a result comes on.

DTC P1570 (66): Battery Module Individual Voltage Problem

NOTE: Before you troubleshoot, record all freeze data, and review the general troubleshooting information (see page 12-5).

1. Turn the ignition switch to ON (II).

2. Monitor the OBD STATUS for P1570 (66) in the DTCs MENU with the HDS.

   Does the screen indicate FAILED?

   YES—Go to step 4.

   NO—If the screen indicates PASSED, go to step 3. If the screen indicates NOT COMPLETED, go to step 1.

3. Check the IMA BATTERY MODULE 1 VOLTAGE through IMA BATTERY MODULE 11 VOLTAGE in the DATA LIST with the HDS.

   Is there more than 15 V on at least one module?

   YES—Intermittent failure, the system is OK at this time. Check for poor connections or loose terminals at the battery module and the BCM module.■

   NO—Go to step 4.

4. Turn the ignition switch to LOCK (0).

5. Turn the battery module switch OFF (see page 12-4).

6. Remove the IPU lid (see page 12-180).

7. Check the terminal connections at BCM module connector B (14P).

   Are the connections OK?

   YES—Go to step 8.

   NO—Repair the connections, then go to step 11.

8. Disconnect BCM module connector B (14P).

(cont'd)

DTC Troubleshooting (cont'd)

9. Measure the voltage between these BCM module connector terminals:

   - B6 and B14
   - B14 and B5
   - B5 and B13
   - B13 and B4
   - B4 and B12
   - B12 and B11
   - B7 and B1
   - B1 and B8
   - B8 and B2
   - B2 and B9
   - B9 and B3

BCM MODULE CONNECTOR B (14P)

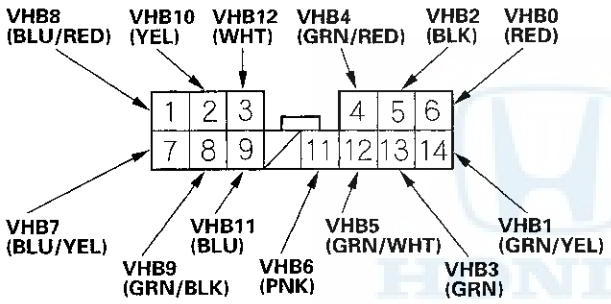

Wire side of female terminals

Are all measurements about 7.0 V or more?

YES—Go to step 17.

NO—Replace the battery module (see page 12-187), then go to step 10.

10. Turn the ignition switch to LOCK (0).

11. Reconnect all connectors.

12. Reinstall the IPU lid (see page 12-180), then turn the battery module switch ON (see page 12-4).

13. Turn the ignition switch to ON (II).

14. Clear the DTC with the HDS (see page 12-6).

15. Check for Temporary DTCs or DTCs with the HDS.

    Is DTC P1570 (66) indicated?

    YES—Check for poor connections or loose terminals at the battery module and the BCM module, then go to step 1.

    NO—Go to step 16.

16. Monitor the OBD STATUS for DTC P1570 (66) in the DTCs MENU with the HDS.

    Does the screen indicate PASSED?

    YES—Troubleshooting is complete. If any other Temporary DTCs or DTCs were indicated in step 15, go to the indicated DTC's troubleshooting. ■

    NO—If the screen indicates FAILED, check for poor connections or loose terminals at the battery module and the BCM module, then go to step 1. If the screen indicates NOT COMPLETED, keep the ignition switch ON (II) until a result comes on.

17. Reconnect all connectors.

18. Reinstall the IPU lid (see page 12-180), then turn the battery module switch ON (see page 12-4).

19. Update the BCM module if it does not have the latest software (see page 12-181), or substitute a known-good BCM module (see page 12-8).

20. Check for Temporary DTCs or DTCs with the HDS.

    Is DTC P1570 (66) indicated?

    YES—Check for poor connections or loose terminals at the battery module and the BCM module. If the BCM module was updated, substitute a known-good BCM module (see page 12-8), then recheck. If the BCM module was substituted, go to step 1.

    NO—Go to step 21.

21. Monitor the OBD STATUS for DTC P1570 (66) in the DTCs MENU with the HDS.

    Does the screen indicate PASSED?

    YES—If the BCM module was updated, troubleshooting is complete. If the BCM module was substituted, replace the original BCM module (see page 12-182). If any other Temporary DTCs or DTCs were indicated in step 20, go to the indicated DTC's troubleshooting. ■

    NO—If the screen indicates FAILED, check for poor connections or loose terminals at the battery module and the BCM module. If the BCM module was updated, substitute a known-good BCM module (see page 12-8), then recheck. If the BCM module was substituted, go to step 1. If the screen indicates NOT COMPLETED, keep the ignition switch ON (II) until result comes on.

DTC P1574 (68): Battery Module Temperature Signal Circuit Malfunction

NOTE:
- Before you troubleshoot, record all freeze data, and review the general troubleshooting information (see page 12-5).
- If the IPU module fan duct is blocked, DTC P1574 (68) may be detected.

1. Turn the ignition switch to ON (II).

2. Clear the DTC with the HDS (see page 12-6).

3. Check for Temporary DTCs or DTCs with the HDS.

   Is DTC P1448 (63) indicated?

   YES—Do the troubleshooting for DTC P1448 (63) (see page 12-110).

   NO—Go to step 4.

4. Record the value of IMA BATTERY TEMPERATURE SENSOR 1, IMA BATTERY TEMPERATURE SENSOR 2, and IMA BATTERY TEMPERATURE SENSOR 3 in the DATA LIST with the HDS.

5. Check the SOC in the DATA LIST with the HDS. If the SOC is higher than 65 %, start the engine several times until the SOC decreases to less than 65 %.

6. Clear the DTC with the HDS (see page 12-6).

7. Start the engine, and hold it between 3,500 rpm and 4,000 rpm without load (in P or N) until the SOC increases to above 70 %.

8. Compare the value of IMA BATTERY TEMPERATURE SENSOR 1, IMA BATTERY TEMPERATURE SENSOR 2, and IMA BATTERY TEMPERATURE SENSOR 3 in the DATA LIST with the HDS to the values noted in step 4.

   Do any of the values differ 1.0 °F (0.5 °C) or more?

   YES—Intermittent failure, the system is OK at this time. Check for poor connections or loose terminals at the battery module and the BCM module. ■

   NO—Go to step 9.

(cont'd)

DTC Troubleshooting (cont'd)

9. Check the IPU module air duct and the IPU module fan for disconnections, damage, or obstructions.

   Are the IPU module air duct and the IPU module fan OK?

   YES—Replace the battery module (see page 12-187), then go to step 10.

   NO—Repair the IPU module air duct or IPU module fan as needed, then go to step 10.

10. Turn the ignition switch to ON (II).

11. Clear the DTC with the HDS (see page 12-6).

12. Check for Temporary DTCs or DTCs with the HDS.

    Is DTC P1574 (68) indicated?

    YES—Check for poor connections or loose terminals at the battery module and the BCM module, then go to step 1.

    NO—Go to step 13.

13. Monitor the OBD STATUS for DTC P1574 (68) in the DTCs MENU with the HDS.

    Does the screen indicate PASSED?

    YES—Troubleshooting is complete. If any other Temporary DTCs or DTCs were indicated in step 12, go to the indicated DTC's troubleshooting.■

    NO—If the screen indicates FAILED, check for poor connections or loose terminals at the battery module and the BCM module, then go to step 1. If the screen indicates NOT COMPLETED, keep the ignition switch ON (II) until a result comes on.

DTC P1575 (12): MCM Voltage Malfunction

NOTE:
- Before you troubleshoot, record all freeze data, and review the general troubleshooting information (see page 12-5).
- If the battery module switch is turned OFF while the ignition switch is ON (II) , DTC P1575 (12) may be detected.

1. Turn the ignition switch to ON (II).

2. Check for Temporary DTCs or DTCs with the HDS.

   Is DTC P0AE1 (62) indicated?

   YES—Do the troubleshooting for DTC P0AE1 (62) (see page 12-93).

   NO—Go to step 3.

3. Turn the ignition switch to ON (II), and wait 1 minute.

4. Compare the MPI VOLTAGE and the TOTAL VOLTAGE OF ALL IMA BATTERY MODULES in the DATA LIST with the HDS.

   Is there more than a 10 V difference between the MPI VOLTAGE and the TOTAL VOLTAGE OF ALL IMA BATTERY MODULES?

   YES—Go to step 8.

   NO—Go to step 5.

5. Check the SOC in the DATA LIST with the HDS.

6. Start the engine, and hold it between 3,500 rpm and 4,000 rpm without load (in P or N) until the SOC changes to 70 %.

7. Monitor the OBD STATUS for DTC P1575 (12) in the DTCs MENU with the HDS.

   Does the screen indicate FAILED?

   YES—Go to step 21.

   NO—If the screen indicates PASSED, intermittent failure, the system is OK at this time. Check for poor connections or loose terminals at the MCM, the high voltage connector, and the BCM module. If the screen indicates NOT COMPLETED, go to step 3.

8. Record the value of the MPI VOLTAGE in the DATA LIST with the HDS.

9. Compare the MPI VOLTAGE and the TOTAL VOLTAGE OF ALL IMA BATTERY MODULES in the DATA LIST with the HDS.

   Is there more than a 10 V difference between the MPI VOLTAGE and the TOTAL VOLTAGE OF ALL IMA BATTERY MODULES?

   YES—Go to step 10.

   NO—Go to step 21.

10. Turn the ignition switch to LOCK (0).

11. Turn the battery module switch OFF (see page 12-4).

12. Remove the IPU lid (see page 12-180).

13. Check the high voltage cable (orange cable) connection and busbar connection on the junction board.

    Are the connections OK?

    YES—Go to step 14.

    NO—Repair the connections, then go to step 29.

14. Disconnect BCM module connector A (40P).

15. Check for continuity between BCM module connector terminals A14 and A28.

BCM MODULE CONNECTOR A (40P)

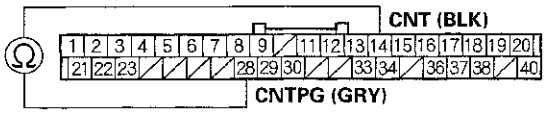

Wire side of female terminals

Is there continuity?

YES—Go to step 16.

NO—Go to step 19.

16. Check for continuity between BCM module connector terminal A14 and body ground.

BCM MODULE CONNECTOR A (40P)

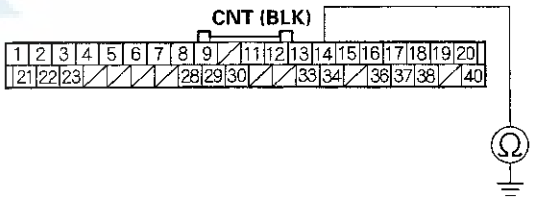

Wire side of female terminals

Is there continuity?

YES—Go to step 17.

NO—Go to step 39.

17. Disconnect the junction board 12P connector.

(cont'd)

DTC Troubleshooting (cont'd)

18. Check for continuity between BCM module connector terminal A14 and body ground.

BCM MODULE CONNECTOR A (40P)

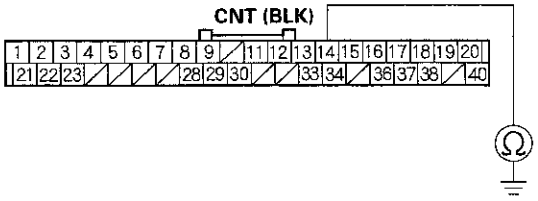

Wire side of female terminals

Is there continuity?

YES—Repair short to ground in the wire between the junction board 12P connector and the BCM module (A14), then go to step 29.

NO—Replace the battery module (see page 12-187), then go to step 29.

19. Disconnect the junction board 12P connector.

20. Check for continuity between these terminals:

- BCM module connector terminal A14 and junction board 12P connector terminal No. 1.
- BCM module connector terminal A28 and junction board 12P connector terminal No. 2.

BCM MODULE CONNECTOR A (40P)

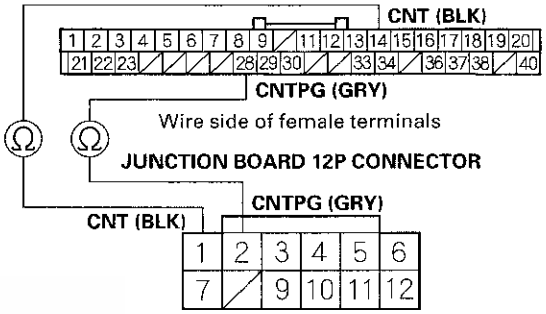

Wire side of female terminals

Is there continuity?

YES—Replace the battery module (see page 12-187), then go to step 29.

NO—Repair open in the wire between the junction board 12P connector and the BCM module (A4, A28), then go to step 29.

21. Turn the ignition switch to LOCK (0).

22. Turn the battery module switch OFF (see page 12-4).

23. Remove the IPU lid (see page 12-180).

24. Check the BCM module connector terminals.

Are the terminals OK?

YES—Go to step 25.

NO—Repair the BCM module connector terminals, then go to step 29.

25. Turn the ignition switch to ON (II).

26. Record the values of the IMA BATTERY MODULE 1 VOLTAGE through the IMA BATTERY MODULE 11 VOLTAGE in the DATA LIST with the HDS.

27. Disconnect BCM module connector B (14P).

28. Using the IMA BATTERY MODULE VOLTAGES you noted in step 26, compare the voltage between the following BCM module connector terminals and the listed IMA BATTERY MODULE VOLTAGES in the DATA LIST with the HDS.

    - B6 and B14, compared to IMA BATTERY MODULE 1 VOLTAGE
    - B14 and B5, compared to IMA BATTERY MODULE 2 VOLTAGE
    - B5 and B13, compared to IMA BATTERY MODULE 3 VOLTAGE
    - B13 and B4, compared to IMA BATTERY MODULE 4 VOLTAGE
    - B4 and B12, compared to IMA BATTERY MODULE 5 VOLTAGE
    - B12 and B11 compared to IMA BATTERY MODULE 6 VOLTAGE
    - B7 and B1, compared to IMA BATTERY MODULE 7 VOLTAGE
    - B1 and B8, compared to IMA BATTERY MODULE 8 VOLTAGE
    - B8 and B2, compared to IMA BATTERY MODULE 9 VOLTAGE
    - B2 and B9, compared to IMA BATTERY MODULE 10 VOLTAGE
    - B9 and B3, compared to IMA BATTERY MODULE 11 VOLTAGE

BCM MODULE CONNECTOR B (14P)

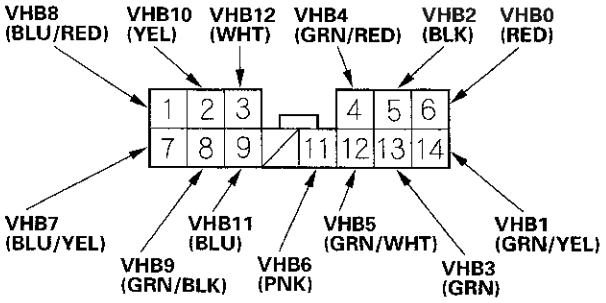

Wire side of female terminals

Is there more than a 1 V difference between the BCM module measurement and the DATA LIST measurement?

YES—Go to step 38.

NO—Go to step 47.

29. Turn the ignition switch to LOCK (0).

30. Reconnect all connectors.

31. Reinstall the IPU lid (see page 12-180), then turn the battery module switch ON (see page 12-4).

32. Turn the ignition switch to ON (II).

33. Clear the DTC with the HDS (see page 12-6).

34. Check the SOC in the DATA LIST with the HDS.

35. Start the engine, and hold it between 3,500 rpm and 4,000 rpm without load (in P or N) until the SOC is 70 %.

36. Check for Temporary DTCs or DTCs with the HDS.

    Is DTC P1575 (12) indicated?

    YES—Check for poor connections or loose terminals at the MCM, the high voltage contactor, and the BCM module, then go to step 1.

    NO—Go to step 37.

37. Monitor the OBD STATUS for DTC P1575 (12) in the DTCs MENU with the HDS.

    Does the screen indicate PASSED?

    YES—Troubleshooting is complete. If any other Temporary DTCs or DTCs were indicated in step 36, go to the indicated DTC's troubleshooting. ■

    NO—If the screen indicates FAILED, check for poor connections or loose terminals at the MCM, the high voltage connector, and the BCM module, then go to step 1. If the screen indicates NOT COMPLETED, go to step 34.

38. Turn the ignition switch to LOCK (0).

39. Reconnect all connectors.

40. Reinstall the IPU lid (see page 12-180), then turn the battery module switch ON (see page 12-4).

41. Update the BCM module if it does not have the latest software (see page 12-181), or substitute a known-good BCM module (see page 12-8).

(cont'd)

DTC Troubleshooting (cont'd)

42. Clear the DTC with the HDS (see page 12-6).

43. Check the SOC in the DATA LIST with the HDS.

44. Start the engine, and hold it between 3,500 rpm and 4,000 rpm without load (in P or N) until the SOC is 70 %.

45. Check for Temporary DTCs or DTCs with the HDS.

    Is DTC P1575 (12) indicated?

    YES—Check for poor connections or loose terminals at the MCM, the high voltage connector, and the BCM module. If the BCM module was updated, substitute a known-good BCM module (see page 12-8), then go to step 43. If the BCM module was substituted, go to step 1.

    NO—Go to step 46.

46. Monitor the OBD STATUS for DTC P1575 (12) in the DTCs MENU with the HDS.

    Does the screen indicate PASSED?

    YES—If the BCM module was updated, troubleshooting is complete. If the BCM module was substituted, replace the original BCM module (see page 12-182). If any other Temporary DTCs or DTCs were indicated in step 45, go to the indicated DTC's troubleshooting. ■

    NO—If the screen indicates FAILED, check for poor connections or loose terminals at the MCM, the high voltage connector, and the BCM module. If the BCM module was updated, substitute a known-good BCM module (see page 12-8), then go to step 43. If the BCM module was substituted, go to step 1. If the screen indicates NOT COMPLETED, go to step 43.

47. Turn the ignition switch to LOCK (0).

48. Reconnect all connectors.

49. Reinstall the IPU lid (see page 12-180), then turn the battery module switch ON (see page 12-4).

50. Update the MCM if it does not have the latest software (see page 12-185), or substitute a known-good MCM (see page 12-8).

51. Clear the DTC with the HDS (see page 12-6).

52. Check the SOC in the DATA LIST with the HDS.

53. Start the engine, and hold it between 3,500 rpm and 4,000 rpm without load (in P or N) until the SOC is 70 %.

54. Check for Temporary DTCs or DTCs with the HDS.

    Is DTC P1575 (12) indicated?

    YES—Check for poor connections or loose terminals at the MCM, the high voltage connector, and the BCM module. If the MCM was updated, substitute a known-good MCM (see page 12-8), then go to step 51. If the MCM was substituted, go to step 1.

    NO—Go to step 55.

55. Monitor the OBD STATUS for DTC P1575 (12) in the DTCs MENU with the HDS.

    Does the screen indicate PASSED?

    YES—If the MCM was updated, troubleshooting is complete. If the MCM was substituted, replace the original MCM (see page 12-186). If any other Temporary DTCs or DTCs were indicated in step 54, go to the indicated DTC's troubleshooting. ■

    NO—If the screen indicates FAILED, check for poor connections or loose terminals at the MCM, the high voltage connector, and the BCM module. If the MCM was updated, substitute a known-good MCM (see page 12-8), then go to step 52. If the MCM was substituted, go to step 1. If the screen indicates NOT COMPLETED, go to step 52.

DTC P1585 (30): Motor Current Sensor Circuit Malfunction

NOTE: Before you troubleshoot, record all freeze data, and review the general troubleshooting information (see page 12-5).

1. Turn the ignition switch to ON (II).

2. Check for Temporary DTCs or DTCs with the HDS.

   Is DTC P0A5E (24), P0A5F (25), P0A61 (26), P0A62 (27), P0A64 (28), or P0A65 (29) indicated?

   YES—Go to the indicated DTC's troubleshooting.

   NO—Go to step 3.

3. Start the engine.

4. Monitor the OBD STATUS for DTC P1585 (30) in the DTCs MENU with the HDS.

   Does the screen indicate FAILED?

   YES—Go to step 5.

   NO—If the screen indicates PASSED, intermittent failure, the system is OK at this time. Check for poor connections or loose terminals at the MCM. If the screen indicates NOT COMPLETED, keep the engine idling until a result comes on.

5. Update the MCM if it does not have the latest software (see page 12-185), or substitute a known-good MCM (see page 12-8).

6. Check for Temporary DTCs or DTCs with the HDS.

   Is DTC P1585 (30) indicated?

   YES—Check for poor connections or loose terminals at the MCM. If the MCM was updated, substitute a known-good MCM (see page 12-8), then recheck. If the MCM was substituted, go to step 1.

   NO—Go to step 7.

7. Monitor the OBD STATUS for DTC P1585 (30) in the DTCs MENU with the HDS.

   Does the screen indicate PASSED?

   YES—If the MCM was updated, troubleshooting is complete. If the MCM was substituted, replace the original MCM (see page 12-186). If any other Temporary DTCs or DTCs were indicated in step 6, go to the indicated DTC's troubleshooting. ■

   NO—If the screen indicates FAILED, check for poor connections or loose terminals at the MCM. If the MCM was updated, substitute a known-good MCM (see page 12-8), then recheck. If the MCM was substituted, go to step 1. If the screen indicates NOT COMPLETED, keep the ignition switch ON (II) until a result comes on.

DTC Troubleshooting (cont'd)

DTC P1586 (23): Battery Current Sensor Signal Malfunction

NOTE: Before you troubleshoot, record all freeze data, and review the general troubleshooting information (see page 12-5).

1. Turn the ignition switch to ON (II).
2. Check for Temporary DTCs or DTCs with the HDS.

   Are any DTCs except DTC P1586 (23) and P0A7F (78) indicated?

   YES—Go to the indicated DTC's troubleshooting.

   NO—Go to step 3.
3. Test-drive the vehicle using wide open throttle for at least 2 seconds, then decelerate with light braking.
4. Monitor the OBD STATUS for DTC P1586 (23) in the DTCs MENU with the HDS.

   Does the screen indicate FAILED?

   YES—Go to step 5.

   NO—If the screen indicates PASSED, intermittent failure, the system is OK at this time. Check for poor connections or loose terminals at the battery current sensor and the BCM module. If the screen indicates NOT COMPLETED, go to step 3.
5. Turn the ignition switch to LOCK (0).
6. Turn the battery module switch OFF (see page 12-4).
7. Remove the IPU lid (see page 12-180).
8. Check the connection at the junction board 12P connector.

   Is the connection OK?

   YES—Go to step 9.

   NO—Repair the connection, then go to step 15.
9. Disconnect BCM module connector A (40P).
10. Check for continuity between body ground and BCM module connector terminals A16 and A36 individually.

BCM MODULE CONNECTOR A (40P)

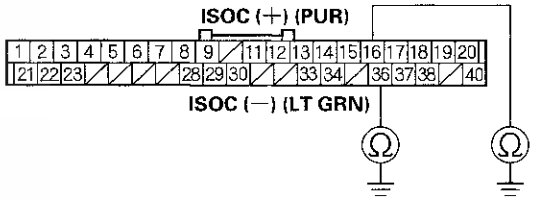

Wire side of female terminals

Is there continuity?

YES—Go to step 11.

NO—Go to step 13.

11. Disconnect the junction board 12P connector.

12. Check for continuity between body ground and BCM module connector terminals A16 and A36 individually.

BCM MODULE CONNECTOR A (40P)

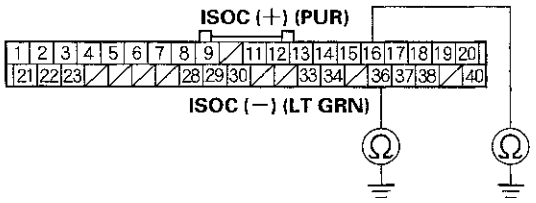

Wire side of female terminals

Is there continuity?

YES—Repair short in the wire between the BCM module (A16, A36) and the junction board 12P connector, then go to step 15.

NO—Replace the battery module (see page 12-187), then go to step 15.

13. Disconnect the junction board 12P connector.

14. Check for continuity between these terminals:

- Junction board 12P connector terminal No. 3 and BCM module connector terminal A16.
- Junction board 12P connector terminal No. 4 and BCM module connector terminal A36.

BCM MODULE CONNECTOR A (40P)

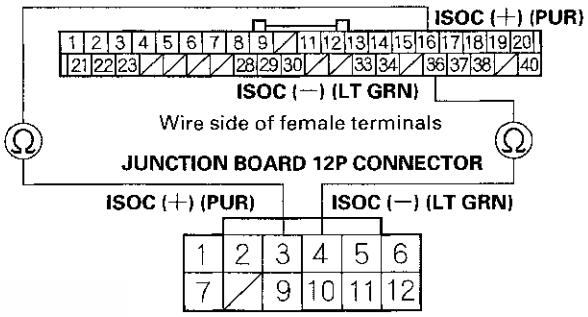

Wire side of female terminals

Is there continuity?

YES—Go to step 23.

NO—Repair open in the wire between the BCM module (A16, A36) and the junction board 12P connector, then go to step 15.

15. Turn the ignition switch to LOCK (0).

16. Reconnect all connectors.

(cont'd)

DTC Troubleshooting (cont'd)

17. Reinstall the IPU lid (see page 12-180), then turn the battery module switch ON (see page 12-4).

18. Turn the ignition switch to ON (II).

19. Clear the DTC with the HDS (see page 12-6).

20. Test-drive the vehicle using wide open throttle for at least 2 seconds, then decelerate with light braking.

21. Check for Temporary DTCs or DTCs with the HDS.

    Is DTC P1586 (23) indicated?

    YES—Check for poor connections or loose terminals at the battery current sensor and the BCM module, then go to step 1.

    NO—Go to step 22.

22. Monitor the OBD STATUS for DTC P1586 (23) in the DTCs MENU with the HDS.

    Does the screen indicate PASSED?

    YES—Troubleshooting is complete. If any other Temporary DTCs or DTCs were indicated in step 21, go to the indicated DTC's troubleshooting. ■

    NO—If the screen indicates FAILED, check for poor connections or loose terminals at the battery current sensor and the BCM module, then go to step 1. If the screen indicates NOT COMPLETED, go to step 20.

23. Reconnect all connectors.

24. Reinstall the IPU lid (see page 12-180), then turn the battery module switch ON (see page 12-4).

25. Update the BCM module if it does not have the latest software (see page 12-181), or substitute a known-good BCM module (see page 12-8).

26. Test-drive the vehicle using wide open throttle for at least 2 seconds, then decelerate with light braking.

27. Check for Temporary DTCs or DTCs with the HDS.

    Is DTC P1586 (23) indicated?

    YES—Check for poor connections or loose terminals at the battery current sensor and the BCM module. If the BCM module was updated, substitute a known-good BCM module (see page 12-8), then go to step 26. If the BCM module was substituted, go to step 1.

    NO—Go to step 28.

28. Monitor the OBD STATUS for DTC P1586 (23) in the DTCs MENU with the HDS.

    Does the screen indicate PASSED?

    YES—If the BCM module was updated, troubleshooting is complete. If the BCM module was substituted, replace the original BCM module (see page 12-182). If any other Temporary DTCs or DTCs were indicated in step 27, go to the indicated DTC's troubleshooting. ■

    NO—If the screen indicates FAILED, check for poor connections or loose terminals at the battery current sensor and the BCM module. If the BCM module was updated, substitute a known-good BCM module (see page 12-8), then go to step 26. If the BCM module was substituted, go to step 1. If the screen indicates NOT COMPLETED, go to step 26.

DTC P15A4 (81): A/C Compressor Driver Relay Stays Activated

NOTE: Before you troubleshoot, record all freeze data, and review the general troubleshooting information (see page 12-5).

1. Turn the ignition switch to ON (II).

2. Make sure the ambient temperature is above 41 °F (5 °C).

3. Start the engine, and let it idle for 5 minutes.

4. Turn the A/C on, and set it to 72 °F (22 °C).

5. Monitor the OBD STATUS for DTC P15A4 (81) in the DTCs MENU with the HDS.

   Does the screen indicate FAILED?

   YES—Go to step 6.

   NO—If the screen indicates PASSED, intermittent failure, the system is OK at this time. Check for poor connections or loose terminals at the A/C compressor driver and the BCM module. If the screen indicates NOT COMPLETED, go to step 1.

6. Turn the ignition switch to LOCK (0).

7. Turn the battery module switch OFF (see page 12-4).

8. Remove the cover (A). Check the connections at the A/C compressor power cable connector (B) in the engine compartment.

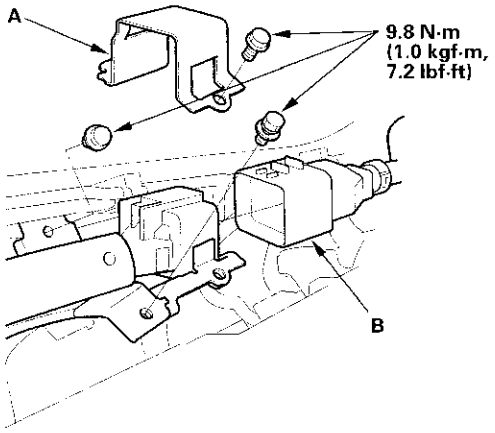

   Are the connections OK?

   YES—Go to step 9.

   NO—Repair the connections, then go to step 15.

9. Disconnect the A/C compressor power cable connector (A).

   NOTE:
   - If the A/C compressor power cable connector terminals are wet, dry them with a clean towel. Do not use compressed air.
   - Use the 250 V range of your insulated resistance tester, and wear gloves.

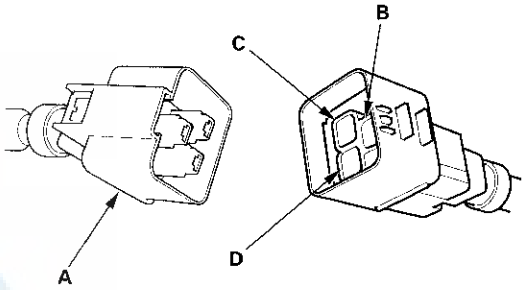

10. Check for continuity between A/C compressor power cable terminals B and C, C and D, and D and B individually.

    Is there continuity?

    YES—Go to step 11.

    NO—Replace the A/C compressor (see page 21-110), then go to step 15.

(cont'd)

DTC Troubleshooting (cont'd)

11. Reconnect the A/C compressor power cable.

12. Remove the IPU lid (see page 12-180).

13. Disconnect the A/C compressor power connector (A) from the A/C compressor driver.

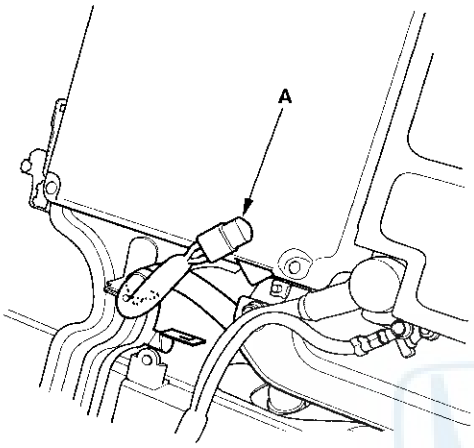

14. Check for continuity between A/C compressor power cable terminals A and B, B and C, and C and A individually.

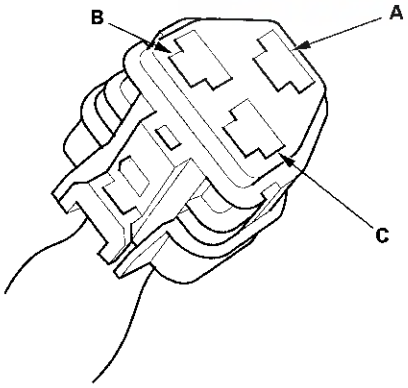

Is there continuity?

YES—Replace the A/C compressor driver (see page 21-109), then go to step 15.

NO—Replace the motor power cable (see page 12-189), then go to step 15.

15. Reconnect all connectors.

16. Reinstall the IPU lid (see page 12-180), then turn the battery module switch ON (see page 12-4).

17. Turn the ignition switch to ON (II).

18. Clear the DTC with the HDS (see page 12-6).

19. Make sure the ambient temperature is above 41 °F (5 °C).

20. Start the engine, and let it idle for 5 minutes.

21. Turn the A/C on, and set it 72 °F (22 °C), then let the engine idle for 1 minute.

22. Check for Temporary DTCs or DTCs with the HDS.

    Is DTC P15A4 (81) indicated?

    YES—Check for poor connections or loose terminals at the BCM module and the A/C compressor driver, then go to step 1.

    NO—Go to step 23.

23. Monitor the OBD STATUS for DTC P15A4 (81) in the DTCs MENU with the HDS.

    Does the screen indicate PASSED?

    YES—Troubleshooting is complete. If any other Temporary DTCs or DTCs were indicated in step 22, go to the indicated DTC's troubleshooting. ■

    NO—If the screen indicates FAILED, check for poor connections or loose terminals at the BCM module and the A/C compressor driver, then go to step 1. If the screen indicates NOT COMPLETED, go to step 19.

DTC P15A5 (85): Motor Current Sensor Circuit Malfunction

NOTE: Before you troubleshoot, record all freeze data, and review the general troubleshooting information (see page 12-5).

1. Start the engine, and let it idle for 10 seconds.

2. Check for Temporary DTCs or DTCs with the HDS.

   Is DTC P0A5E (24), P0A5F (25), P0A61 (26), P0A62 (27), P0A64 (28), P1440 (57), P0A3F (89), and/or P0A65 (29) indicated?

   YES—Go to the indicated DTC's troubleshooting.

   NO—Go to step 3.

3. Test-drive the vehicle using wide open throttle for at least 2 seconds, then decelerate with light braking.

4. Monitor the OBD STATUS for DTC P15A5 (85) in the DTCs MENU with the HDS.

   Does the screen indicate FAILED?

   YES—Go to step 5.

   NO—If the screen indicates PASSED, intermittent failure, the system is OK at this time. Check for poor connections or loose terminals at the motor power cable, the motor stator, and the MCM. If the screen indicates NOT COMPLETED, go to step 3.

5. Do the MOTOR ROTOR POSITION CALIBRATION in the IMA ADJUSTMENT MENU with the HDS.

   Does the screen indicate COMPLETE?

   YES—Go to step 6.

   NO—Do the MOTOR ROTOR POSITION CALIBRATION (see page 12-6).■

6. At idle, individually check the U PHASE MOTOR CURRENT SENSOR, V PHASE MOTOR CURRENT SENSOR, and W PHASE MOTOR CURRENT SENSOR in the DATA LIST with the HDS.

   Do the values vary from 0 A?

   YES—Go to step 25.

   NO—Go to step 7.

7. Turn the ignition switch to LOCK (0).

8. Turn the battery module switch OFF (see page 12-4).

9. Remove the IPU lid (see page 12-180).

10. Lift the harness holder. Remove the PDU cover (A) and the motor power cables (B) from the MCM.

    NOTE: Wrap the motor power cables with insulating tape.

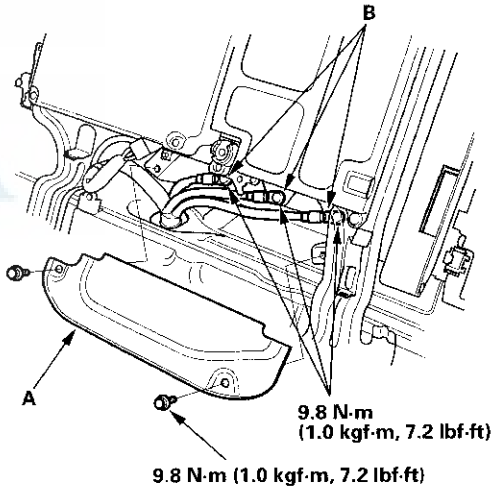

(cont'd)

DTC Troubleshooting (cont'd)

11. Disconnect the motor power cable connector (A) from the motor stator (see page 12-3).

    NOTE:
    - Disconnecting the motor power cable connector from the motor stator (see page 12-3).
    - If the motor power cable terminals are wet, dry them with a clean towel. Do not use compressed air.

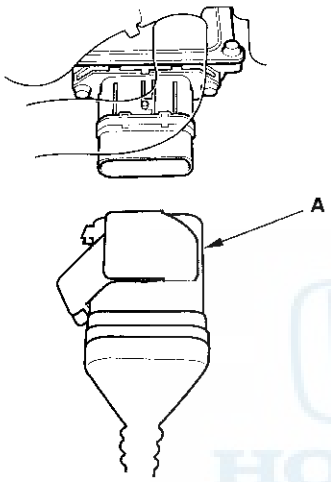

12. Measure the resistance between motor power cable terminals A and B, B and C, and C and A individually.

    NOTE: Use the 250 V range of your insulated resistance tester, and wear gloves.

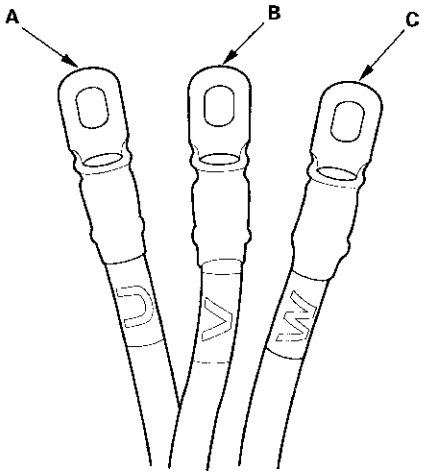

Is there more than 350 kΩ ?

YES—Go to step 13.

NO—Replace the motor power cable (see page 12-189), then go to step 18.

13. Reconnect all connectors.

14. Reinstall the IPU lid (see page 12-180), then turn the battery module switch ON (see page 12-4).

15. Update the MCM if it does not have the latest software (see page 12-185), or substitute a known-good MCM (see page 12-8).

16. Test-drive the vehicle using wide open throttle for at least 2 seconds, then decelerate with light braking.

17. Check for Temporary DTCs or DTCs with the HDS.

    Is DTC P15A5 (85) indicated?

    YES—If the MCM was updated, substitute a known-good MCM (see page 12-8), then go to step 16. If the MCM was substituted, replace the motor stator (see page 12-195), then go to step 1.

    NO—If the MCM was updated, troubleshooting is complete. If the MCM was substituted, replace the original MCM (see page 12-186). If any other Temporary DTCs or DTCs are indicated, go to the indicated DTC's troubleshooting. ■

18. Reconnect all connectors.

19. Reinstall the IPU lid (see page 12-180), then turn the battery module switch ON (see page 12-4).

20. Turn the ignition switch to ON (II).

21. Clear the DTC with the HDS (see page 12-6).

22. Test-drive the vehicle using wide open throttle for at least 2 seconds, then decelerate using light braking.

23. Check for Temporary DTCs or DTCs with the HDS.

    Is DTC P15A5 (85) indicated?

    YES—Check for poor connections or loose terminals at the motor power cable, the MCM, and the motor stator, then go to step 1.

    NO—Go to step 24.

24. Monitor the OBD STATUS for DTC P15A5 (85) in the DTCs MENU with the HDS.

    Does the screen indicate PASSED?

    YES—Troubleshooting is complete. If any other Temporary DTCs or DTCs were indicated in step 23, go to the indicated DTC's troubleshooting.■

    NO—If the screen indicates FAILED, check for poor connections or loose terminals at the motor power cable, the MCM, and the motor stator, then go to step 1. If the screen indicates NOT COMPLETED, go to step 22.

25. Turn the ignition switch to LOCK (0).

26. Reinstall the IPU lid (see page 12-180), then turn the battery module switch ON (see page 12-4).

27. Update the MCM if it does not have the latest software (see page 12-185), or substitute a known-good MCM (see page 12-8).

28. Test-drive the vehicle using wide open throttle for at least 2 seconds, then decelerate using light braking.

29. Check for Temporary DTCs or DTCs with the HDS.

    Is DTC P15A5 (85) indicated?

    YES—Check for poor connections or loose terminals at the motor power cable, the MCM, and the motor stator, If the MCM was updated, substitute a known-good MCM (see page 12-8), then go to step 28. If the BCM module was substituted, go to step 1.

    NO—Go to step 30.

30. Monitor the OBD STATUS for DTC P15A5 (85) in the DTCs MENU with the HDS.

    Does the screen indicate PASSED?

    YES—If the MCM was updated, troubleshooting is complete. If the MCM was substituted, replace the original MCM (see page 12-186). If any other Temporary DTCs or DTCs were indicated step 29, go to the indicated DTC's troubleshooting.■

    NO—If the screen indicates FAILED, check for poor connections or loose terminals at the motor power cable, the MCM, and the motor stator. If the MCM was updated, substitute a known-good MCM (see page 12-8), then go to step 28. If the MCM was substituted, go to step 1. If the screen indicates NOT COMPLETED, go to step 28.

DTC Troubleshooting (cont'd)

DTC P15A6 (86): U Phase Motor Current Sensor Circuit Malfunction

NOTE: Before you troubleshoot, record all freeze data, and review the general troubleshooting information (see page 12-5).

1. Turn the ignition switch to ON (II).

2. Check for Temporary DTCs or DTCs with the HDS.

   Is DTC P0A5E (24), and/or P0A5F (25) indicated?

   YES—Do the troubleshooting for DTC P0A5E (24) (see page 12-58) and/or DTC P0A5F (25) (see page 12-59).

   NO—Go to step 3.

3. Monitor the OBD STATUS for DTC P15A6 (86) in the DTCs MENU with the HDS.

   Does the screen indicate FAILED?

   YES—Go to step 4.

   NO—If the screen indicates PASSED, intermittent failure, the system is OK at this time. Check for poor connections or loose terminals at the MCM. If the screen indicates NOT COMPLETED, go to step 1.

4. Update the MCM if it does not have the latest software (see page 12-185), or substitute a known-good MCM (see page 12-8).

5. Check for Temporary DTCs or DTCs with the HDS.

   Is DTC P15A6 (86) indicated?

   YES—Check for poor connections or loose terminals at the MCM. If the MCM was updated, substitute a known-good MCM (see page 12-8), then recheck. If the MCM was substituted, go to step 1.

   NO—Go to step 6.

6. Monitor the OBD STATUS for DTC P15A6 (86) in the DTCs MENU with the HDS.

   Does the screen indicate PASSED?

   YES—If the MCM was updated, troubleshooting is complete. If the MCM was substituted, replace the original MCM (see page 12-186). If any other Temporary DTCs or DTCs were indicated in step 5, go to the indicated DTC's troubleshooting. ■

   NO—If the screen indicates FAILED, check for poor connections or loose terminals at the MCM, the high voltage connector, and the BCM module. If the MCM was updated, substitute a known-good MCM (see page 12-8), then recheck. If the MCM was substituted, go to step 1. If the screen indicates NOT COMPLETED, keep the ignition switch ON (II) until a result comes on.

DTC P15A7 (87): V Phase Motor Current Sensor Circuit Malfunction

NOTE: Before you troubleshoot, record all freeze data, and review the general troubleshooting information (see page 12-5).

1. Turn the ignition switch to ON (II).

2. Check for Temporary DTCs or DTCs with the HDS.

   Is DTC P0A61 (26) and/or P0A62 (27) indicated?

   YES—Do the troubleshooting for DTC P0A61 (26) (see page 12-60) and/or DTC P0A62 (27) (see page 12-61).

   NO—Go to step 3.

3. Monitor the OBD STATUS for DTC P15A7 (87) in the DTCs MENU with the HDS.

   Does the screen indicate FAILED?

   YES—Go to step 4.

   NO—If the screen indicates PASSED, intermittent failure, the system is OK at this time. Check for poor connections or loose terminals at the MCM. If the screen indicates NOT COMPLETED, go to step 1.

4. Update the MCM if it does not have the latest software (see page 12-185), or substitute a known-good MCM (see page 12-8).

5. Check for Temporary DTCs or DTCs with the HDS.

   Is DTC P15A7 (87) indicated?

   YES—Check for poor connections or loose terminals at the MCM. If the MCM was updated, substitute a known-good MCM (see page 12-8), then recheck. If the MCM was substituted, go to step 1.

   NO—Go to step 6.

6. Monitor the OBD STATUS for DTC P15A7 (87) in the DTCs MENU with the HDS.

   Does the screen indicate PASSED?

   YES—If the MCM was updated, troubleshooting is complete. If the MCM was substituted, replace the original MCM (see page 12-186). If any other Temporary DTCs or DTCs were indicated in step 5, go to the indicated DTC's troubleshooting. ■

   NO—If the screen indicates FAILED, check for poor connections or loose terminals at the MCM. If the MCM was updated, substitute a known-good MCM (see page 12-8), then recheck. If the MCM was substituted, go to step 1. If the screen indicates NOT COMPLETED, keep the ignition switch ON (II) until a result comes on.

DTC Troubleshooting (cont'd)

DTC P15A8 (88): W Phase Motor Current Sensor Circuit Malfunction

NOTE: Before you troubleshoot, record all freeze data, and review the general troubleshooting information (see page 12-5).

1. Turn the ignition switch to ON (II).

2. Check for Temporary DTCs or DTCs with the HDS.

   Is DTC P0A64 (28) and/or P0A65 (29) indicated?

   YES—Do the troubleshooting for DTC P0A64 (28) (see page 12-62) and/or DTC P0A65 (29) (see page 12-63).

   NO—Go to step 3.

3. Monitor the OBD STATUS for DTC P15A8 (88) in the DTCs MENU with the HDS.

   Does the screen indicate FAILED?

   YES—Go to step 4.

   NO—If the screen indicates PASSED, intermittent failure, the system is OK at this time. Check for poor connections or loose terminals at the MCM. If the screen indicates NOT COMPLETED, go to step 1.

4. Update the MCM if it does not have the latest software (see page 12-185), or substitute a known-good MCM (see page 12-8).

5. Check for Temporary DTCs or DTCs with the HDS.

   Is DTC P15A8 (88) indicated?

   YES—Check for poor connections or loose terminals at the MCM. If the MCM was updated, substitute a known-good MCM (see page 12-8), then recheck. If the MCM was substituted, go to step 1.

   NO—Go to step 6.

6. Monitor the OBD STATUS for DTC P15A8 (88) in the DTCs MENU with the HDS.

   Does the screen indicate PASSED?

   YES—If the MCM was updated, troubleshooting is complete. If the MCM was substituted, replace the original MCM (see page 12-186). If any other Temporary DTCs or DTCs were indicated in step 5, go to the indicated DTC's troubleshooting. ■

   NO—If the screen indicates FAILED, check for poor connections or loose terminals at the MCM. If the MCM was updated, substitute a known-good MCM (see page 12-8), then recheck. If the MCM was substituted, go to step 1. If the screen indicates NOT COMPLETED, keep the ignition switch ON (II) until a result comes on.

DTC P15AA (93): Motor Rotor Position Not Learned

NOTE: Before you troubleshoot, record all freeze data, and review the general troubleshooting information (see page 12-5).

1. Turn the ignition switch to ON (II).
2. Clear the DTC with the HDS (see page 12-6).
3. Start the engine, and let it idle for 1 minute.
4. Turn the ignition switch to LOCK (0), then turn it to ON (II).
5. Check for Temporary DTCs or DTCs with the HDS.

   Are any DTC(s) except P15AA (93) indicated?

   YES—Go to the indicated DTC's troubleshooting.

   NO—Go to step 6.
6. Clear the DTC with the HDS (see page 12-6).
7. Do the MOTOR ROTOR POSITION CALIBRATION in the IMA ADJUSTMENT MENU with the HDS.

   Does the screen indicate COMPLETE?

   YES—Troubleshooting is complete.■

   NO—Check for poor connections at the motor rotor position sensor and the MCM. If needed, repair the connections, then go to step 8.
8. Reconnect all connectors.
9. Turn the ignition switch to ON (II).
10. Clear the DTC with the HDS (see page 12-6).
11. Start the engine, and let it idle for 1 minute.
12. Turn the ignition switch to LOCK (0), then turn it to ON (II).
13. Check for Temporary DTCs or DTCs with the HDS.

    Is DTC P15AA (93) indicated?

    YES—Check for poor connections or loose terminals at the motor rotor position sensor and the MCM, then go to step 1.

    NO—Go to step 14.
14. Monitor the OBD STATUS for DTC P15AA (93) in the DTCs MENU with the HDS.

    Does the screen indicate PASSED?

    YES—Troubleshooting is complete. If any other Temporary DTCs or DTCs were indicated in step 13, go to the indicated DTC's troubleshooting.■

    NO—If the screen indicates FAILED, check for poor connections or loose terminals at the motor rotor position sensor and the MCM, then go to step 1. If the screen indicates NOT COMPLETED, go to step 11.

DTC Troubleshooting (cont'd)

DTC P1629 (79): Battery Current Sensor Circuit Malfunction

NOTE: Before you troubleshoot, record all freeze data, and review the general troubleshooting information (see page 12-5).

1. Turn the ignition switch to ON (II).
2. Check the BATTERY CURRENT SENSOR SUPPLY VOLTAGE in the DATA LIST with the HDS.

   Is there less than 4.0 V?

   YES—Go to step 3.

   NO—Intermittent failure, the system is OK at this time. Check for poor connections or loose terminals at the battery current sensor and the BCM module. ■
3. Turn the ignition switch to LOCK (0).
4. Turn the battery module switch OFF (see page 12-4).
5. Remove the IPU lid (see page 12-180).
6. Disconnect the junction board 12P connector.
7. Turn the ignition switch to ON (II).
8. Check the BATTERY CURRENT SENSOR SUPPLY VOLTAGE in the DATA LIST with the HDS.

   Is there less than 4.0 V?

   YES—Go to step 9.

   NO—Replace the battery module (see page 12-187), then go to step 12.
9. Turn the ignition switch to LOCK (0).
10. Disconnect BCM module connector A (40P).
11. Check for continuity between BCM module connector terminal A5 and body ground.

BCM MODULE CONNECTOR A (40P)

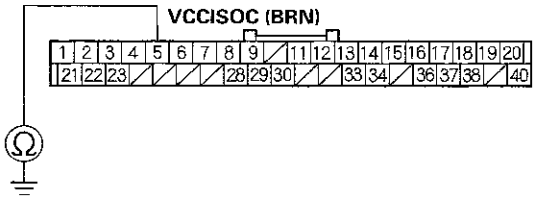

Wire side of female terminals

Is there continuity?

YES—Repair short to ground in the wire between the junction board 12P connector and the BCM module (A5), then go to step 13.

NO—Go to step 19.

12. Turn the ignition switch to LOCK (0).
13. Reconnect all connectors.
14. Reinstall the IPU lid (see page 12-180), then turn the battery module switch ON (see page 12-4).
15. Turn the ignition switch to ON (II).
16. Clear the DTC with the HDS (see page 12-6).
17. Check for Temporary DTCs or DTCs with the HDS.

    Is DTC P1629 (79) indicated?

    YES—Check for poor connections or loose terminals at the battery current sensor and the BCM module, then go to step 1.

    NO—Go to step 18.

18. Monitor the OBD STATUS for DTC P1629 (79) in the DTCs MENU with the HDS.

    Does the screen indicate PASSED?

    YES—Troubleshooting is complete. If any other Temporary DTCs or DTCs were indicated in step 17, go to the indicated DTC's troubleshooting. ■

    NO—If the screen indicates FAILED, check for poor connections or loose terminals at the battery current sensor and the BCM module, then go to step 1. If the screen indicates NOT COMPLETED, keep the ignition switch ON (II) until a result comes on.

19. Reinstall the IPU lid (see page 12-180), then turn the battery module switch ON (see page 12-4).

20. Update the BCM module if it does not have the latest software (see page 12-181), or substitute a known-good BCM module (see page 12-8).

21. Check for Temporary DTCs or DTCs with the HDS.

    Is DTC P1629 (79) indicated?

    YES—Check for poor connections or loose terminals at the battery current sensor and the BCM module. If the BCM module was updated, substitute a known-good BCM module (see page 12-8), then recheck. If the BCM module was substituted, go to step 1.

    NO—Go to step 22.

22. Monitor the OBD STATUS for DTC P1629 (79) in the DTCs MENU with the HDS.

    Does the screen indicate PASSED?

    YES—If the BCM module was updated, troubleshooting is complete. If the BCM module was substituted, replace the original BCM module (see page 12-182). If any other Temporary DTCs or DTCs were indicated in step 21, go to the indicated DTC's troubleshooting. ■

    NO—If the screen indicates FAILED, check for poor connections or loose terminals at the battery current sensor and the BCM module. If the BCM module was updated, substitute a known-good BCM module (see page 12-8), then recheck. If the BCM module was substituted, go to step 1. If the screen indicates NOT COMPLETED, keep the ignition switch ON (II) until a result comes on.

DTC Troubleshooting (cont'd)

DTC P1673 (22): MCM Relay Stays Activated

NOTE: Before you troubleshoot, record all freeze data, and review the general troubleshooting information (see page 12-5).

1. Turn the ignition switch to ON (II).
2. Turn the ignition switch to LOCK (0), then wait at least 30 seconds. Turn the ignition switch to ON (II) again.
3. Monitor the OBD STATUS for DTC P1673 (22) in the DTCs MENU with the HDS.

   Does the screen indicate FAILED?

   YES—Go to step 4.

   NO—If the screen indicates PASSED, intermittent failure, the system is OK at this time. Check for poor connections or loose terminals at MCM relay 1 and the BCM module. If the screen indicates NOT COMPLETED, go to step 2.
4. Turn the ignition switch to LOCK (0).
5. Turn the battery module switch OFF (see page 12-4).
6. Remove the IPU lid (see page 12-180).
7. Disconnect BCM module connector A (40P).
8. Check for continuity between body ground and BCM module connector terminal A11.

BCM MODULE CONNECTOR A (40P)

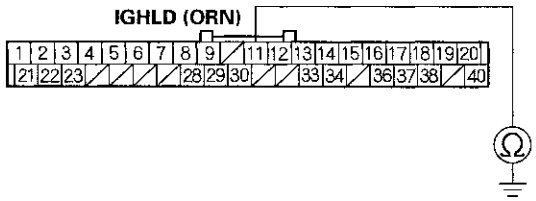

Wire side of female terminals

Is there continuity?

YES—Repair short to ground the wire between MCM relay 1 and the BCM module (A11), then go to step 10.

NO—Go to step 9.

9. Test MCM relay 1 (see page 22-64).

   Is the relay OK?

   YES—Go to step 17.

   NO—Replace MCM relay 1, then go to step 10.
10. Reconnect all connectors.
11. Reinstall the IPU lid (see page 12-180), then turn the battery module switch ON (see page 12-4).
12. Turn the ignition switch to ON (II).
13. Clear the DTC with the HDS (see page 12-6).
14. Turn the ignition switch to LOCK (0), and wait at least 30 seconds, then turn the ignition switch to ON (II).

15. Check for Temporary DTCs or DTCs with the HDS.

    Is DTC P1673 (22) indicated?

    YES—Check for poor connections or loose terminals at MCM relay 1 and the BCM module, then go to step 1.

    NO—Go to step 16.

16. Monitor the OBD STATUS for DTC P1673 (22) in the DTCs MENU with the HDS.

    Does the screen indicate PASSED?

    YES—Troubleshooting is complete. If any other Temporary DTCs or DTCs were indicated in step 15, go to the indicated DTC's troubleshooting.■

    NO—If the screen indicates FAILED, check for poor connections or loose terminals at MCM relay 1 and the BCM module, then go to step 1. If the screen indicates NOT COMPLETED, go to step 14.

17. Reconnect all connectors.

18. Reinstall the IPU lid (see page 12-180), then turn the battery module switch ON (see page 12-4).

19. Update the BCM module if it does not have the latest software (see page 12-181), or substitute a known-good BCM module (see page 12-8).

20. Turn the ignition switch to LOCK (0), and wait at least 30 seconds, then turn the ignition switch to ON (II).

21. Check for Temporary DTCs or DTCs with the HDS.

    Is DTC P1673 (22) indicated?

    YES—Check for poor connections or loose terminals at MCM relay 1 and the BCM module. If the BCM module was updated, substitute a known-good BCM module (see page 12-8), then go to step 20. If the BCM module was substituted, go to step 1.

    NO—Go to step 22.

22. Monitor the OBD STATUS for DTC P1673 (22) in the DTCs MENU with the HDS.

    Does the screen indicate PASSED?

    YES—If the BCM module was updated, troubleshooting is complete. If the BCM module was substituted, replace the original BCM module (see page 12-182). If any other Temporary DTCs or DTCs were indicated in step 21, go to the indicated DTC's troubleshooting.■

    NO—If the screen indicates FAILED, check for poor connections or loose terminals at MCM relay 1 and the BCM module. If the BCM module was updated, substitute the BCM module (see page 12-8), then go to step 20. If the BCM module was substituted, go to step 1. If the screen indicates NOT COMPLETED, go to step 20.

DTC Troubleshooting (cont'd)

DTC P16C3 (31): DC-DC Converter Temperature Sensor Circuit Malfunction

NOTE:
- Before you troubleshoot, record all freeze data, and review the general troubleshooting information (see page 12-5).
- If the IPU module fan duct is blocked, DTC P16C3 (31) may be detected.

1. Turn the ignition switch to ON (II).

2. Check for Temporary DTCs or DTCs with the HDS.

   Is DTC U1220 (34) or U1221 (35) indicated?

   YES—Go to the indicated DTC's troubleshooting.

   NO—Go to step 3.

3. Check the DC-DC CONVERTER TEMPERATURE in the DATA LIST with the HDS.

   Is it more than 419 °F (215 °C), or less than −40 °F (−40 °C) indicated?

   YES—Go to step 4.

   NO—Intermittent failure, the system is OK at this time.■

4. Turn the ignition switch to LOCK (0).

5. Check the IPU module air duct and the IPU module fan for disconnections, damage, or obstructions.

   Are the IPU module air duct and the IPU module fan OK?

   YES—Replace the DC-DC converter (see page 12-182), then go to step 6.

   NO—Repair the IPU module air duct or the IPU module fan as necessary, then go to step 6.

6. Turn the ignition switch to ON (II).

7. Clear the DTC with the HDS (see page 12-6).

8. Check for Temporary DTCs or DTCs with the HDS.

   Is DTC P16C3 (31) indicated?

   YES—Check for poor connections or loose terminals at the DC-DC converter and the BCM module, then go to step 1.

   NO—Go to step 9.

9. Monitor the OBD STATUS for DTC P16C3 (31) in the DTCs MENU with the HDS.

   Does the screen indicate PASSED?

   YES—Troubleshooting is complete. If any other Temporary DTCs or DTCs were indicated in step 8, go to the indicated DTC's troubleshooting. ■

   NO—If the screen indicates FAILED, check for poor connections or loose terminals at the DC-DC converter and the BCM module, then go to step 1. If the screen indicates NOT COMPLETED, keep the ignition switch ON (II) until a result comes on.

DTC U0028 (107): F-CAN Malfunction (BUS-OFF (MCM))

NOTE:
- To verify this is the appropriate troubleshooting procedure, jump the SCS with the HDS and read the flash code, or change the HDS setup to show HM codes and read the HM code.
- Before you troubleshoot, record all freeze data, and review the general troubleshooting information (see page 12-5).

1. Turn the ignition switch to ON (II).

2. Clear the DTC with the HDS (see page 12-6).

3. Check for Temporary DTCs or DTCs in the IMA SYSTEM with the HDS.

   Is DTC U0028 (107) indicated?

   YES—Go to step 4.

   NO—Intermittent failure, the system is OK at this time. Check for poor connections or loose terminals at the PCM and the MCM. ■

4. Check for Temporary DTCs or DTCs in the IMA SYSTEM with the HDS.

   Is DTC U0028 (108) indicated?

   YES—Go to step 5.

   NO—Go to step 10.

5. Check for Temporary DTCs or DTCs in the PGM-FI SYSTEM with the HDS.

   Is DTC U0028 indicated?

   YES—Do the troubleshooting for DTC U0028 (see page 11-164).

   NO—Update the PCM if it does not have the latest software (see page 11-236), or substitute a known-good PCM (see page 11-7), then recheck. If the symptom/indication goes away with an updated PCM, go to step 6. If the symptom/indication goes away with a known-good PCM, replace the original PCM (see page 11-238), then go to step 6.

6. Turn the ignition switch to ON (II).

7. Clear the DTC with the HDS (see page 12-6).

8. Check for Temporary DTCs or DTCs in the IMA SYSTEM with the HDS.

   Is DTC U0028 (107) indicated?

   YES—Check for poor connections or loose terminals at the PCM, the BCM module, and the MCM, then go to step 1.

   NO—Go to step 9.

9. Monitor the OBD STATUS for DTC U0028 (107) in the DTCs MENU with the HDS.

   Does the screen indicate PASSED?

   YES—Troubleshooting is complete. If any other Temporary DTCs or DTCs were indicated in step 8, go to the indicated DTC's troubleshooting. ■

   NO—If the screen indicates FAILED, check for poor connections or loose terminals at the PCM, the BCM module, and the MCM, then go to step 1. If the screen indicates NOT COMPLETED, keep the ignition switch ON (II) until a result comes on.

(cont'd)

DTC Troubleshooting (cont'd)

10. Update the MCM if it does not have the latest software (see page 12-185), or substitute a known-good MCM (see page 12-8).

11. Check for Temporary DTCs or DTCs in the IMA SYSTEM with the HDS.

    Is DTC U0028 (107) indicated?

    YES—Check for poor connections or loose terminals at the PCM, the BCM module, and the MCM. If the MCM was updated, substitute a known-good MCM (see page 12-8), then recheck. If the MCM was substituted, go to step 1.

    NO—Go to step 12.

12. Monitor the OBD STATUS for DTC U0028 (107) in the DTCs MENU with the HDS.

    Does the screen indicate PASSED?

    YES—If the MCM was updated, troubleshooting is complete. If the MCM was substituted, replace the original MCM (see page 12-186). If any other Temporary DTCs or DTCs were indicated in step 11, go to the indicated DTC's troubleshooting.■

    NO—If the screen indicates FAILED, check for poor connections or loose terminals at the PCM, the BCM module, and the MCM. If the MCM was updated, substitute a known-good MCM (see page 12-8), then recheck. If the MCM was substituted, go to step 1. If the screen indicates NOT COMPLETED, keep the ignition switch ON (II) until a result comes on.

DTC U0028 (108): F-CAN Malfunction (BUS-OFF (BCM Module))

NOTE:
- To verify this is the appropriate troubleshooting procedure, jump the SCS with the HDS and read the flash code, or change the HDS setup to show HM codes and read the HM code.
- Before you troubleshoot, record all freeze data, and review the general troubleshooting information (see page 12-5).

1. Turn the ignition switch to ON (II).

2. Clear the DTC with the HDS (see page 12-6).

3. Check for Temporary DTCs or DTCs in the IMA SYSTEM with the HDS.

   Is DTC U0028 (108) indicated?

   YES—Go to step 4.

   NO—Intermittent failure, the system is OK at this time. Check for poor connections or loose terminals at the PCM, the BCM module, and the MCM.■

4. Check for Temporary DTCs or DTCs in the IMA SYSTEM with the HDS.

   Is DTC U0028 (107) indicated?

   YES—Go to step 5.

   NO—Go to step 10.

5. Check for Temporary DTCs or DTCs in the PGM-FI SYSTEM with the HDS.

   Is DTC U0028 indicated?

   YES—Do the troubleshooting for DTC U0028 (see page 11-164).

   NO—Update the PCM if it does not have the latest software (see page 11-236), or substitute a known-good PCM (see page 11-7), then recheck. If the symptom/indication goes away with an updated PCM, go to step 6. If the symptom/indication goes away with a known-good PCM, replace the original PCM (see page 11-238), then go to step 6.

6. Turn the ignition switch to ON (II).

7. Clear the DTC with the HDS (see page 12-6).

8. Check for IMA system Temporary DTCs or DTCs in the IMA SYSTEM with the HDS.

   Is DTC U0028 (108) indicated?

   YES—Check for poor connections or loose terminals at the PCM, the BCM module, and the MCM, then go to step 1.

   NO—Go to step 9.

9. Monitor the OBD STATUS for DTC U0028 (108) in the DTCs MENU with the HDS.

   Does the screen indicate PASSED?

   YES—Troubleshooting is complete. If any other Temporary DTCs or DTCs were indicated in step 8, go to the indicated DTC's troubleshooting.■

   NO—If the screen indicates FAILED, check for poor connections or loose terminals at the PCM, the BCM module, and the MCM, then go to step 1. If the screen indicates NOT COMPLETED, keep the ignition switch ON (II) until a result comes on.

10. Update the BCM module if it does not have the latest software (see page 12-181), or substitute a known-good BCM module (see page 12-8).

11. Check for Temporary DTCs or DTCs in the IMA SYSTEM with the HDS.

    Is DTC U0028 (108) indicated?

    YES—Check for poor connections or loose terminals at the PCM, the BCM module, and the MCM. If the BCM module was updated, substitute a known-good BCM module (see page 12-8), then recheck. If the BCM module was substituted, go to step 1.

    NO—Go to step 12.

12. Monitor the OBD STATUS for DTC U0028 (108) in the DTCs MENU with the HDS.

    Does the screen indicate PASSED?

    YES—If the BCM module was updated, troubleshooting is complete. If the BCM module was substituted, replace the original BCM module (see page 12-182). If any other Temporary DTCs or DTCs were indicated in step 11, go to the indicated DTC's troubleshooting.■

    NO—If the screen indicates FAILED, check for poor connections or loose terminals at the PCM, the BCM module, and the MCM. If the BCM module was updated, substitute a known-good BCM module (see page 12-8), then recheck. If the BCM module was substituted, go to step 1. If the screen indicates NOT COMPLETED, keep the ignition switch ON (II) until a result comes on.

DTC Troubleshooting (cont'd)

DTC U0037 (98): IMA-CAN Malfunction (BUS-OFF (MCM))

DTC U0037 (99): IMA-CAN Malfunction (BUS-OFF (BCM Module))

NOTE:
- To verify this is the appropriate troubleshooting procedure, jump the SCS with the HDS and read the flash code, or change the HDS setup to show HM codes and read the HM code.
- Before you troubleshoot, record all freeze data, and review the general troubleshooting information (see page 12-5).

1. Turn the ignition switch to ON (II).

2. Clear the DTC with the HDS (see page 12-6).

3. Check for Temporary DTCs or DTCs in the IMA SYSTEM with the HDS.

   Is DTC U0037 (98 or 99) indicated?

   YES—Go to step 4.

   NO—Intermittent failure, the system is OK at this time.■

4. Check for Temporary DTCs or DTCs in the IMA SYSTEM and the PGM-FI SYSTEM with the HDS.

   Is DTC U0037 indicated?

   YES—Go to step 11.

   NO—Go to step 5.

5. Turn the ignition switch to LOCK (0).

6. Turn the battery module switch OFF (see page 12-4).

7. Remove the IPU lid (see page 12-180).

8. Remove the BCM module (see page 12-182).

9. Disconnect the MCM 20P connector.

10. Check for continuity between these terminals:

    - BCM module connector terminal A20 and MCM 20P connector terminal No. 11.
    - BCM module connector terminal A40 and MCM 20P connector terminal No. 1.

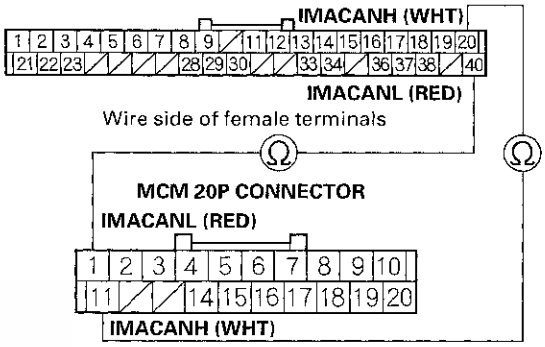

Is there continuity?

YES—
- Go to step 37 for DTC U0037 (98).
- Go to step 42 for DTC U0037 (99).

NO—Repair open in the wire between the BCM module (A20, A40) and the MCM (No. 1, No. 11), then go to step 31.

11. Turn the ignition switch to LOCK (0).

12. Turn the battery module switch OFF (see page 12-4).

13. Remove the IPU lid (see page 12-180).

14. Measure the resistance between BCM module connector terminals A20 and A40.

BCM MODULE CONNECTOR A (40P)

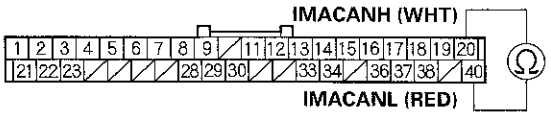

Wire side of female terminals

Is there 50.4–61.6 Ω ?

YES—Repair short to ground in the wire between the MCM, the A/C compressor driver, the PCM, and BCM module connector terminal A20 or A40, then go to step 31.

NO—Go to step 15.

15. Disconnect BCM module connector A (40P).

16. Remove the BCM module (see page 12-180), then disconnect the MCM 20P connector.

17. Jump the SCS line with the HDS.

18. Disconnect PCM connector A (44P) and the A/C compressor driver 4P connector.

19. Measure the resistance between BCM module connector terminals A20 and A40.

BCM MODULE CONNECTOR A (40P)

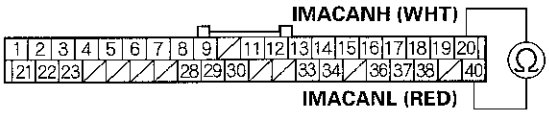

Wire side of female terminals

Is there 1 Ω or less?

YES—Repair short in the wire between BCM module connector terminals A20 and A40, then go to step 31.

NO—Go to step 20.

20. Reconnect the A/C compressor driver 4P connector.

21. Measure the resistance between BCM module connector terminals A20 and A40.

BCM MODULE CONNECTOR A (40P)

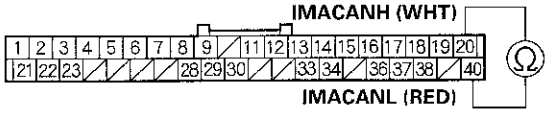

Wire side of female terminals

Is there about 2.6 kΩ ?

YES—Go to step 22.

NO—Replace the A/C compressor driver (see page 21-109), then go to step 31.

22. Disconnect the A/C compressor driver 4P connector.

23. Reconnect PCM connector A (44P).

(cont'd)

DTC Troubleshooting (cont'd)

24. Measure the resistance between BCM module connector terminals A20 and A40.

BCM MODULE CONNECTOR A (40P)

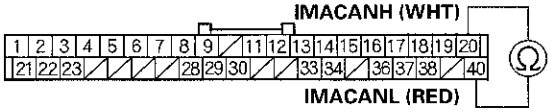

Wire side of female terminals

Is there 108– 132 Ω ?

YES—Go to step 25.

NO—Update the PCM if it does not have the latest software (see page 11-236), or substitute a known-good PCM (see page 11-7), then recheck. If the symptom/indication goes away with an updated PCM, go to step 31. If the symptom/indication goes away with a known-good PCM, replace the original PCM (see page 11-238), then go to step 31.

25. Disconnect PCM connector A (44P).

26. Reconnect the MCM 20P connector.

27. Measure the resistance between BCM module connector terminals A20 and A40.

BCM MODULE CONNECTOR A (40P)

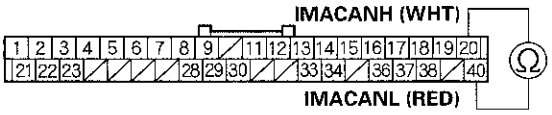

Wire side of female terminals

Is about 2.6 kΩ ?

YES—Go to step 28.

NO—Go to step 37.

28. Disconnect the MCM 20P connector.

29. Reconnect BCM module connector A (40P).

30. Measure the resistance between BCM module connector terminals A20 and A40.

BCM MODULE CONNECTOR A (40P)

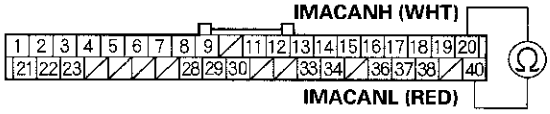

Wire side of female terminals

Is there 108– 132 Ω ?

YES—Go to step 31.

NO—Go to step 42.

31. Reconnect all connectors.

32. Reinstall the IPU lid (see page 12-180), then turn the battery module switch ON (see page 12-4).

33. Turn the ignition switch to ON (II).

34. Clear the DTC with the HDS (see page 12-6).

35. Check for Temporary DTCs or DTCs in the IMA SYSTEM with the HDS.

    Is DTC U0037 (98, 99) indicated?

    YES—Check for poor connections or loose terminals at the BCM module, the A/C compressor driver, the PCM, and the MCM, then go to step 1.

    NO—Go to step 36.

36. Monitor the OBD STATUS for DTC U0037 (98, 99) in the DTCs MENU with the HDS.

    Does the screen indicate PASSED?

    YES—Troubleshooting is complete. If any other Temporary DTCs or DTCs were indicated on step 35, go to the indicated DTC's troubleshooting. ■

    NO—If the screen indicates FAILED, check for poor connections or loose terminals at the BCM module, the A/C compressor driver, the PCM, and the MCM, then go to step 1. If the screen indicates NOT COMPLETED, keep the ignition switch ON (II) until a result comes on.

37. Reconnect all connectors.

38. Reinstall the IPU lid (see page 12-180), then turn the battery module switch ON (see page 12-4).

39. Update the MCM if it does not have the latest software (see page 12-185), or substitute a known-good MCM (see page 12-8).

40. Check for Temporary DTCs or DTCs with the HDS in the IMA SYSTEM.

    Is DTC U0037 (98) indicated?

    YES—Check for poor connections or loose terminals at the BCM module, the A/C compressor driver, the PCM, and the MCM. If the MCM was updated, substitute a known-good MCM (see page 12-8), then recheck. If the MCM was substituted, go to step 1.

    NO—Go to step 41.

41. Monitor the OBD STATUS for DTC U0037 (98) in the DTCs MENU with the HDS.

    Does the screen indicate PASSED?

    YES—If the MCM was updated, troubleshooting is complete. If the MCM was substituted, replace the original MCM (see page 12-186). If any other Temporary DTCs or DTCs were indicated in step 40, go to the indicated DTC's troubleshooting. ■

    NO—If the screen indicates FAILED, check for poor connections or loose terminals at the BCM module, the A/C compressor driver, the PCM, and the MCM. If the MCM was updated, substitute a known-good MCM (see page 12-8), then recheck. If the MCM was substituted, go to step 1. If the screen indicates NOT COMPLETED, keep the ignition switch ON (II) until a result comes on.

(cont'd)

DTC Troubleshooting (cont'd)

42. Reconnect all connectors.

43. Reinstall the IPU lid (see page 12-180), then turn the battery module switch ON (see page 12-4).

44. Update the BCM module if it does not have the latest software (see page 12-181), or substitute a known-good BCM module (see page 12-8).

45. Check for Temporary DTCs or DTCs in the IMA SYSTEM with the HDS.

    Is DTC U0037 (99) indicated in the IMA SYSTEM?

    YES—Check for poor connections or loose terminals at the BCM module, the A/C compressor driver, the PCM, and the MCM. If the BCM module was updated, substitute a known-good BCM module (see page 12-8), then recheck. If the BCM module was substituted, go to step 1.

    NO—Go to step 46.

46. Monitor the OBD STATUS for DTC U0037 (99) in the DTCs MENU with the HDS.

    Does the screen indicate PASSED?

    YES—If the BCM module was updated, troubleshooting is complete. If the BCM module was substituted, replace the original BCM module (see page 12-182). If any other Temporary DTCs or DTCs were indicated in step 45, go to the indicated DTC's troubleshooting. ■

    NO—If the screen indicates FAILED, check for poor connections or loose terminals at the BCM module, the A/C compressor driver, the PCM, and the MCM. If the BCM module was updated, substitute a known-good BCM module (see page 12-8), then recheck. If the BCM module was substituted, go to step 1. If the screen indicates NOT COMPLETED, keep the ignition switch ON (II) until a result comes on.

DTC U0100 (102): F-CAN Malfunction (PCM (CVT System)-MCM)

NOTE:
- To verify this is the appropriate troubleshooting procedure, jump the SCS with the HDS and read the flash code, or change the HDS setup to show HM codes and read the HM code.
- Before you troubleshoot, record all freeze data, and review the general troubleshooting information (see page 12-5).

1. Turn the ignition switch to ON (II).

2. Check for Temporary DTCs or DTCs in the IMA SYSTEM with the HDS.

   Is DTC U0028 (107) indicated?

   YES—Do the troubleshooting for DTC U0028 (107) (see page 12-139).

   NO—Go to step 3.

3. Clear the DTC with the HDS (see page 12-6).

4. Check for Temporary DTCs or DTCs in the IMA SYSTEM with the HDS.

   Is DTC U0100 (102) indicated?

   YES—Go to step 5.

   NO—Intermittent failure, the system is OK at this time. Check for poor connections or loose terminals at the PCM and the MCM. ■

5. Check for Temporary DTCs or DTCs in the IMA SYSTEM with the HDS.

   Is DTC U0100 (103) indicated?

   YES—Go to step 6.

   NO—Go to step 11.

6. Check for Temporary DTCs or DTCs in the PGM-FI SYSTEM and the CVT SYSTEM with the HDS.

   Are any Temporary DTCs or DTCs indicated?

   YES—Go to the indicated DTC's troubleshooting.

   NO—Update the PCM if it does not have the latest software (see page 11-236), or substitute a known-good PCM (see page 11-7), then recheck. If the symptom/indication goes away with an updated PCM, go to step 7. If the symptom/indication goes away with a known-good PCM, replace the original PCM (see page 11-238), then go to step 7.

7. Turn the ignition switch to ON (II).

8. Clear the DTC with the HDS (see page 12-6).

9. Check for Temporary DTCs or DTCs in the IMA SYSTEM with the HDS.

   Is DTC U0100 (102) indicated?

   YES—Check for poor connections or loose terminals at the PCM, the BCM module, and the MCM, then go to step 1.

   NO—Go to step 10.

10. Monitor the OBD STATUS for DTC U0100 (102) in the DTCs MENU with the HDS.

    Does the screen indicate PASSED?

    YES—Troubleshooting is complete. If any other Temporary DTCs or DTCs were indicated in step 9, go to the indicated DTC's troubleshooting.■

    NO—If the screen indicates FAILED, check for poor connections or loose terminals at the PCM, the BCM module, and the MCM, then go to step 1. If the screen indicates NOT COMPLETED, keep the ignition switch ON (II) until a result comes on.

11. Update the MCM if it does not have the latest software (see page 12-185), or substitute a known-good MCM (see page 12-8).

12. Check for Temporary DTCs or DTCs in the IMA SYSTEM with the HDS.

    Is DTC U0100 (102) indicated?

    YES—Check for poor connections or loose terminals at the PCM, the BCM module, and the MCM. If the MCM was updated, substitute a known-good MCM (see page 12-8), then recheck. If the MCM was substituted, go to step 1.

    NO—Go to step 13.

13. Monitor the OBD STATUS for DTC U0100 (102) in the DTCs MENU with the HDS.

    Does the screen indicate PASSED?

    YES—If the MCM was updated, troubleshooting is complete. If the MCM was substituted, replace the original MCM (see page 12-186). If any other Temporary DTCs or DTCs were indicated in step 12, go to the indicated DTC's troubleshooting.■

    NO—If the screen indicates FAILED, check for poor connections or loose terminals at the PCM, the BCM module, and the MCM. If the MCM was updated, substitute a known-good MCM (see page 12-8), then recheck. If the MCM was substituted, go to step 1. If the screen indicates NOT COMPLETED, keep the ignition switch ON (II) until a result comes on.

DTC Troubleshooting (cont'd)

DTC U0100 (103): F-CAN Malfunction (PCM (CVT System)-BCM Module)

NOTE:
- To verify this is the appropriate troubleshooting procedure, jump the SCS with the HDS and read the flash code, or change the HDS setup to show HM codes and read the HM code.
- Before you troubleshoot, record all freeze data, and review the general troubleshooting information (see page 12-5).

1. Turn the ignition switch to ON (II).

2. Check for Temporary DTCs or DTCs in the IMA SYSTEM with the HDS.

   Is DTC U0028 (108) indicated?

   YES—Do the troubleshooting for DTC U0028 (108) (see page 12-140).

   NO—Go to step 3.

3. Clear the DTC with the HDS (see page 12-6).

4. Check for Temporary DTCs or DTCs in the IMA SYSTEM with the HDS.

   Is DTC U0100 (103) indicated?

   YES—Go to step 5.

   NO—Intermittent failure, the system is OK at this time. Check for poor connections or loose terminals at the PCM and the BCM module. ■

5. Check for Temporary DTCs or DTCs in the IMA SYSTEM with the HDS.

   Is DTC U0100 (102) indicated?

   YES—Go to step 6.

   NO—Go to step 11.

6. Check for Temporary DTCs or DTCs in the PGM-FI SYSTEM and the CVT SYSTEM with the HDS.

   Are any Temporary DTCs or DTCs indicated?

   YES—Go to the indicated DTC's troubleshooting.

   NO—Update the PCM if it does not have the latest software (see page 11-236), or substitute a known-good PCM (see page 11-7), then recheck. If the symptom/indication goes away with an updated PCM, go to step 7. If the symptom/indication goes away with a known-good PCM, replace the original PCM (see page 11-238), then go to step 7.

7. Turn the ignition switch to ON (II).

8. Clear the DTC with the HDS (see page 12-6).

9. Check for Temporary DTCs or DTCs in the IMA SYSTEM with the HDS.

   Is DTC U0100 (103) indicated in the IMA SYSTEM?

   YES—Check for poor connections or loose terminals at the PCM, the BCM module, and the MCM, then go to step 1.

   NO—Go to step 10.

10. Monitor the OBD STATUS for DTC U0100 (103) in the DTCs MENU with the HDS.

    Does the screen indicate PASSED?

    YES—Troubleshooting is complete. If any other Temporary DTCs or DTCs were indicated in step 9, go to the indicated DTC's troubleshooting. ■

    NO—If the screen indicates FAILED, check for poor connections or loose terminals at the PCM, the BCM module, and the MCM, then go to step 1. If the screen indicates NOT COMPLETED, keep the ignition switch ON (II) until a result comes on.

11. Update the BCM module if it does not have the latest software (see page 12-181), or substitute a known-good BCM module (see page 12-8).

12. Check for Temporary DTCs or DTCs in the IMA SYSTEM with the HDS.

    Is DTC U0100 (103) indicated?

    YES—Check for poor connections or loose terminals at the PCM, the BCM module, and the MCM. If the BCM module was updated, substitute a known-good BCM module (see page 12-8), then recheck. If the BCM module was substituted, go to step 1.

    NO—Go to step 13.

13. Monitor the OBD STATUS for DTC U0100 (103) in the DTCs MENU with the HDS.

    Does the screen indicate PASSED?

    YES—If the BCM module was updated, troubleshooting is complete. If the BCM module was substituted, replace the original BCM module (see page 12-182). If any other Temporary DTCs or DTCs were indicated in step 12, go to the indicated DTC's troubleshooting.■

    NO—If the screen indicates FAILED, check for poor connections or loose terminals at the PCM, the BCM module, and the MCM. If the BCM module was updated, substitute a known-good BCM module (see page 12-8), then recheck. If the BCM module was substituted, go to step 1. If the screen indicates NOT COMPLETED, keep the ignition switch ON (II) until a result comes on.

DTC U0110 (101): F-CAN Malfunction (BCM Module-MCM)

NOTE:
- Before you troubleshoot, record all freeze data, and review the general troubleshooting information (see page 12-5).
- If DTC U1205 (75) is stored at the same time as DTC U0110 (101) and U0028 (108), the MCM relay is OFF forcibly.
- Information marked with an asterisk (*) applies to the '06-07 models.

1. Turn the ignition switch ON (II).

2. Check for Temporary DTCs or DTCs with the HDS.

   Is DTC U0028 (108) indicated?

   YES—Do the troubleshooting for DTC U0028 (108) (see page 12-140).

   NO—Go to step 3.

3. Clear the DTC with the HDS (see page 12-6).

4. Check for Temporary DTCs or DTCs with the HDS.

   Is DTC U0110 (101) indicated?

   YES—Go to step 5.

   NO—Intermittent failure, the system is OK at this time. Check for poor connections or loose terminals at the PCM, the BCM module, and the MCM.■

5. Check for Temporary DTCs or DTCs with the HDS.

   Is DTC U1205 (75) indicated?

   YES—Go to step 13.

   NO—Go to step 6.

6. Turn the ignition switch to LOCK (0).

7. Turn the battery module switch OFF (see page 12-4).

8. Remove the IPU lid (see page 12-180).

(cont'd)

DTC Troubleshooting (cont'd)

9. Check for poor connections or loose terminals at the MCM connector.

   Are the connections and the terminals OK?

   YES—Go to step 10.

   NO—Repair the connections and the terminals, then go to step 28.

10. Remove the BCM module (see page 12-182).

11. Disconnect the MCM 20P connector.

12. Check for continuity between BCM module connector terminal A1 and MCM 20P connector terminal No. 20, and between BCM module connector terminal A21 and MCM 20P connector terminal No. 10.

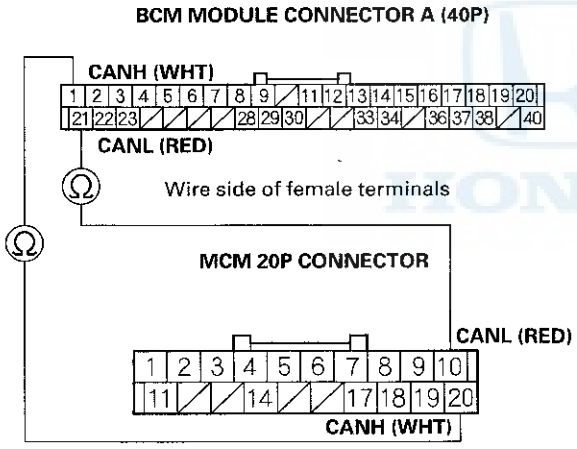

Wire side of female terminals

   Is there continuity?

   YES—Go to step 34.

   NO—Repair open in the wire between the BCM module (A1, A21) and the MCM (No. 10, No. 20), then go to step 28.

13. Turn the ignition switch to LOCK (0).

14. Turn the battery module switch OFF (see page 12-4).

15. Remove the IPU lid (see page 12-180).

16. Remove the BCM module (see page 12-182), then check for continuity between body ground and MCM 20P connector terminals No. 2 and No. 9* individually.

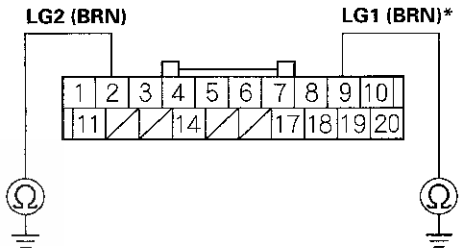

Wire side of female terminals

   Is there continuity?

   YES—Go to step 17.

   NO—Repair open in the wire between the MCM (No. 2, No. 9*) and G102, then go to step 28.

17. Disconnect the MCM 20P connector.

18. Reconnect BCM module connector A.

19. Turn the ignition switch to ON (II), then measure the voltage between MCM 20P connector terminals No. 18 and No. 19* and body ground within 1 second.

MCM 20P CONNECTOR

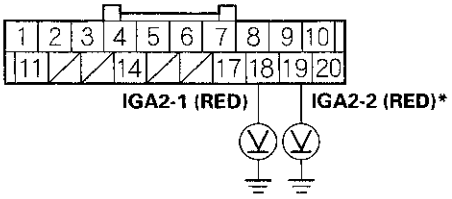

Wire side of female terminals

Is there 12 V battery voltage?

YES—Go to step 39.

NO—Go to step 20.

20. Turn the ignition switch to LOCK (0).

21. Test MCM relay 2 (see page 22-64).

Is the relay OK?

YES—Go to step 22.

NO—Replace MCM relay 2, then go to step 27.

22. Check the No. 61 +B IMA2 (10 A) fuse.

Is the fuse OK?

YES—Go to step 23.

NO—Repair short to ground in the wire between the No. 61 +B IMA2 (10 A) fuse and MCM relay 2. Also replace the No. 61 +B IMA2 (10 A) fuse, then go to step 28.

23. Measure the voltage between MCM relay 2 4P connector terminal No. 2 and body ground.

MCM RELAY 2 4P CONNECTOR

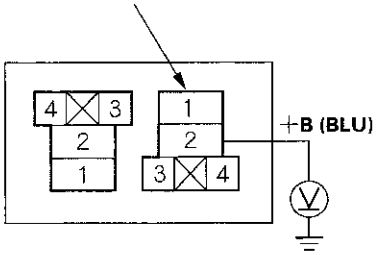

Wire side of female terminals

Is there 12 V battery voltage?

YES—Go to step 24.

NO—Repair open in the wire between MCM relay 2 and the No. 61 +B IMA2 (10 A) fuse, then go to step 28.

24. Check for continuity between MCM 20P connector terminals No. 18 and No. 19*, and MCM relay 2 4P connector terminal No. 1.

MCM 20P CONNECTOR

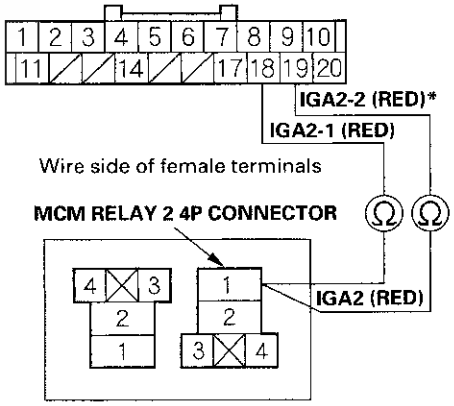

Wire side of female terminals

Is there continuity?

YES—Go to step 25.

NO—Repair open in the wire between MCM relay 2 and the MCM (No. 18, No. 19*), then go to step 28.

25. Disconnect BCM module connector A (40P).

(cont'd)

DTC Troubleshooting (cont'd)

26. Check for continuity between BCM module connector terminal A12 and MCM relay 2 4P connector terminal No. 3.

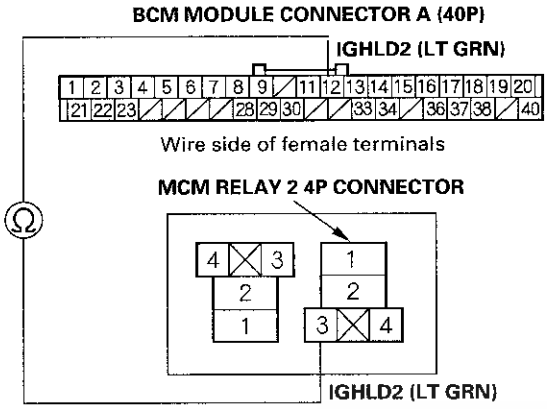

Is there continuity?

YES—Go to step 27.

NO—Repair open in the wire between MCM relay 2 and the BCM module (A12), then go to step 27.

27. Check for continuity between MCM relay 1 4P connector terminal No. 1 and MCM relay 2 4P connector terminal No. 4.

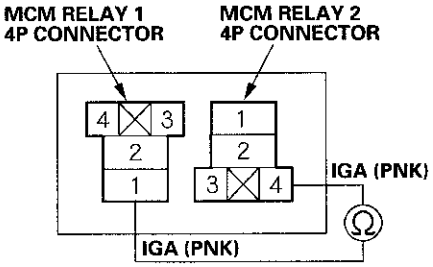

Is there continuity?

YES—Go to step 34.

NO—Repair open in the wire between MCM relay 1 and MCM relay 2, then go to step 28.

28. Reconnect all connectors.

29. Reinstall the IPU lid (see page 12-180), then turn the battery module switch ON (see page 12-4).

30. Turn the ignition switch to ON (II).

31. Clear the DTC with the HDS (see page 12-6).

32. Check for Temporary DTCs or DTCs with the HDS.

Is DTC U0110 (101) indicated?

YES—Check for poor connections or loose terminals at the PCM, the BCM module, and the MCM, then go to step 1.

NO—Go to step 33.

33. Monitor the OBD STATUS for DTC U0110 (101) in the DTCs MENU with the HDS.

Does the screen indicate PASSED?

YES—Troubleshooting is complete. If any other Temporary DTCs or DTCs were indicated in step 32, go to the indicated DTC's troubleshooting. ■

NO—If the screen indicates FAILED, check for poor connections or loose terminals at the PCM, the BCM module, and the MCM, then go to step 1. If the screen indicates NOT COMPLETED, keep the ignition switch ON (II) until a result comes on.

34. Reconnect all connectors.

35. Reinstall the IPU lid (see page 12-180), then turn the battery module switch ON (see page 12-4).

36. Update the BCM module if it does not have the latest software (see page 12-181), or substitute a known-good BCM module (see page 12-8).

37. Check for Temporary DTCs or DTCs with the HDS.

    Is DTC U0110 (101) indicated?

    YES—Check for poor connections or loose terminals at the PCM, the BCM module, and the MCM. If the BCM module was updated, substitute a known-good BCM module (see page 12-8), then recheck. If the BCM module was substituted, go to step 1.

    NO—Go to step 38.

38. Monitor the OBD STATUS for DTC U0110 (101) in the DTCs MENU with the HDS.

    Does the screen indicate PASSED?

    YES—If the BCM module was updated, troubleshooting is complete. If the BCM module was substituted, replace the original BCM module (see page 12-182). If any other Temporary DTCs or DTCs were indicated in step 37, go to the indicated DTC's troubleshooting.■

    NO—If the screen indicates FAILED, check for poor connections or loose terminals at the PCM, the BCM module, and the MCM. If the BCM module was updated, substitute a known-good BCM module (see page 12-8), then recheck. If the BCM module was substituted, go to step 1. If the screen indicates NOT COMPLETED, keep the ignition switch ON (II) until a result comes on.

39. Turn the ignition switch to LOCK (0).

40. Reconnect all connectors.

41. Reinstall the IPU lid (see page 12-180), then turn the battery module switch ON (see page 12-4).

42. Update the MCM if it does not have the latest software (see page 12-185), or substitute a known-good MCM (see page 12-8).

43. Check for Temporary DTCs or DTCs with the HDS.

    Is DTC U0110 (101) indicated?

    YES—Check for poor connections or loose terminals at the PCM, the BCM module, and the MCM. If the MCM was updated, substitute a known-good MCM (see page 12-8), then recheck. If the MCM was substituted, go to step 1.

    NO—Go to step 44.

44. Monitor the OBD STATUS for DTC U0110 (101) in the DTCs MENU with the HDS.

    Does the screen indicate PASSED?

    YES—If the MCM was updated, troubleshooting is complete. If the MCM was substituted, replace the original MCM (see page 12-186). If any other Temporary DTCs or DTCs were indicated in step 43, go to the indicated DTC's troubleshooting.■

    NO—If the screen indicates FAILED, check for poor connections or loose terminals at the PCM, the BCM module, and the MCM. If the MCM was updated, substitute a known-good MCM (see page 12-8), then recheck. If the MCM was substituted, go to step 1. If the screen indicates NOT COMPLETED, keep the ignition switch ON (II) until a result comes on.

DTC Troubleshooting (cont'd)

DTC U0111 (100): F-CAN Malfunction (BCM Module-MCM)

NOTE: Before you troubleshoot, record all freeze data, and review the general troubleshooting information (see page 12-5).

1. Turn the ignition switch to ON (II).
2. Check for Temporary DTCs or DTCs with the HDS.

   Is DTC U0028 (107) indicated?

   YES—Do the troubleshooting for DTC U0028 (107) (see page 12-139).

   NO—Go to step 3.
3. Clear the DTC with the HDS (see page 12-6).
4. Check for Temporary DTCs or DTCs with the HDS.

   Is DTC U0111 (100) indicated?

   YES—Go to step 5.

   NO—Intermittent failure, the system is OK at this time. Check for poor connections or loose terminals at the BCM module and the MCM. ■
5. Turn the ignition switch to LOCK (0).
6. Turn the battery module switch OFF (see page 12-4).
7. Remove the IPU lid (see page 12-180).
8. Remove the BCM module (see page 12-182).
9. Disconnect the MCM 20P connector.
10. Check for continuity between BCM module connector terminal A1 and MCM 20P connector terminal No. 20, and between BCM module connector terminal A21 and MCM 20P connector terminal No. 10.

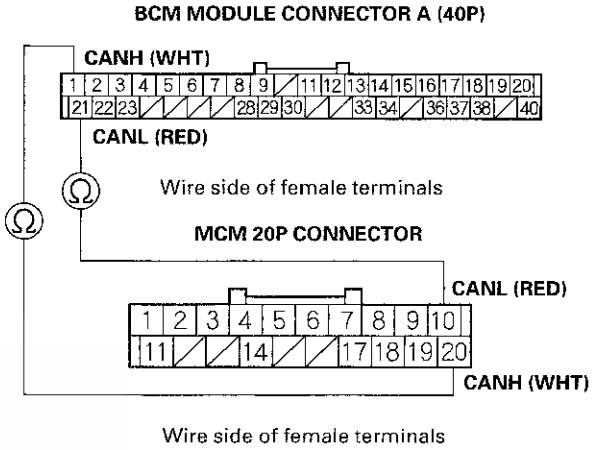

Is there continuity?

YES—Go to step 17.

NO—Repair open in the wire between the BCM module (A1, A21), and the MCM (No. 10, No. 20), then go to step 11.

11. Reconnect all connectors.

12. Reinstall the IPU lid (see page 12-180), then turn the battery module switch ON (see page 12-4).

13. Turn the ignition switch to ON (II).

14. Clear the DTC with the HDS (see page 12-6).

15. Check for Temporary DTCs or DTCs with the HDS.

    Is DTC U0111 (100) indicated?

    YES—Check for poor connections or loose terminals at the BCM module and the MCM, then go to step 1.

    NO—Go to step 16.

16. Monitor the OBD STATUS for DTC U0111 (100) in the DTCs MENU with the HDS.

    Does the screen indicate PASSED?

    YES—Troubleshooting is complete. If any other Temporary DTCs or DTCs were indicated in step 15, go to the indicated DTC's troubleshooting. ■

    NO—If the screen indicates FAILED, check for poor connections or loose terminals at the BCM module and the MCM, then go to step 1. If the screen indicates NOT COMPLETED, keep the ignition switch ON (II) until a result comes on.

17. Reconnect all connectors.

18. Reinstall the IPU lid (see page 12-180), then turn the battery module switch ON (see page 12-4).

19. Update the BCM module if it does not have the latest software (see page 12-181), or substitute a known-good BCM module (see page 12-8).

20. Check for Temporary DTCs or DTCs with the HDS.

    Is DTC U0111 (100) indicated?

    YES—Check for poor connections or loose terminals at the BCM module and the MCM. If the BCM module was updated, substitute a known-good BCM module (see page 12-8), then recheck. If the BCM module was substituted, go to step 1.

    NO—Go to step 21.

21. Monitor the OBD STATUS for DTC U0111 (100) in the DTCs MENU with the HDS.

    Does the screen indicate PASSED?

    YES—If the BCM module was updated, troubleshooting is complete. If the BCM module was substituted, replace the original BCM module (see page 12-182). If any other Temporary DTCs or DTCs were indicated in step 20, go to the indicated DTC's troubleshooting. ■

    NO—If the screen indicates FAILED, check for poor connections or loose terminals at the BCM module and the MCM. If the BCM module was updated, substitute a known-good BCM module (see page 12-8), then recheck. If the BCM module was substituted, go to step 1. If the screen indicates NOT COMPLETED, keep the ignition switch ON (II) until a result comes on.

DTC Troubleshooting (cont'd)

DTC U0155 (106): F-CAN Malfunction (Gauge Control Module-BCM Module)

Go to the DTC U0155 troubleshooting in the PGM-FI system (see page 11-183).

DTC U1204 (55): IMA-CAN Malfunction (PCM-BCM Module)

NOTE:
- To verify this is the appropriate troubleshooting procedure, jump the SCS with the HDS and read the flash code, or change the HDS setup to show HM codes and read the HM code.
- Before you troubleshoot, record all freeze data, and review the general troubleshooting information (see page 12-5).

1. Turn the ignition switch to ON (II).

2. Check for Temporary DTCs or DTCs in the IMA SYSTEM with the HDS.

   Is DTC U0037 (99) indicated?

   YES—Do the troubleshooting for DTC U0037 (99) (see page 12-142).

   NO—Go to step 3.

3. Clear the DTC with the HDS (see page 12-6).

4. Check for Temporary DTCs or DTCs in the IMA SYSTEM with the HDS.

   Is DTC U1204 (55) indicated?

   YES—Go to step 5.

   NO—Intermittent failure, the system is OK at this time. Check for poor connections or loose terminals at the PCM, the BCM module, and the MCM.■

5. Check for Temporary DTCs or DTCs in the IMA SYSTEM and the PGM-FI SYSTEM with the HDS.

   Are DTC U1204 (95) and U0037 (PGM-FI SYSTEM) indicated?

   YES—Go to step 6.

   NO—Go to step 20.

6. Turn the ignition switch to LOCK (0).
7. Jump the SCS line with the HDS.
8. Disconnect PCM connector A (44P).
9. Turn the battery module switch OFF (see page 12-4).
10. Remove the IPU lid (see page 12-180).
11. Disconnect BCM module connector A (40P).
12. Connect BCM module connector terminals A20 and A40 to body ground with a jumper wire.

BCM MODULE CONNECTOR A (40P)

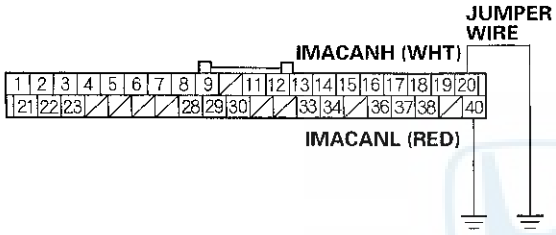

Wire side of female terminals

13. Check for continuity between body ground and PCM connector terminals A38 and A39 individually.

PCM CONNECTOR A (44P)

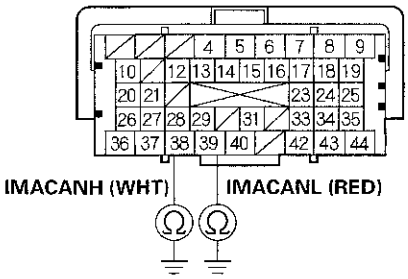

Terminal side of female terminals

Is there continuity?

YES—Update the PCM if it does not have the latest software (see page 11-236), or substitute a known-good PCM (see page 11-7), then recheck. If symptom/indication goes away with an updated PCM, go to step 14. If the symptom/indication goes away with a known-good PCM, replace the original PCM (see page 11-238), then go to step 14.

NO—Repair open in the wire between the PCM, the BCM module (A20, A40), and the MCM (No. 1, No. 11), then go to step 14.

(cont'd)

DTC Troubleshooting (cont'd)

14. Reconnect all connectors.

15. Reinstall the IPU lid (see page 12-180), then turn the battery module switch ON (see page 12-4).

16. Turn the ignition switch to ON (II).

17. Clear the DTC with the HDS (see page 12-6).

18. Check for Temporary DTCs or DTCs in the IMA SYSTEM with the HDS.

    Is DTC U1204 (55) is indicated?

    YES—Check for poor connections or loose terminals at the PCM, the BCM module, and the MCM, then go to step 1.

    NO—Go to step 19.

19. Monitor the OBD STATUS for DTC U1204 (55) in the DTCs MENU with the HDS.

    Does the screen indicate PASSED?

    YES—Troubleshooting is complete. If any other Temporary DTCs or DTCs were indicated in step 18 go to the indicated DTC's troubleshooting. ■

    NO—If the screen indicates FAILED, check for poor connections or loose terminals at the PCM, the BCM module, and the MCM, then go to step 1. If the screen indicates NOT COMPLETED, keep the ignition switch ON (II) until a result comes on.

20. Update the BCM module if it does not have the latest software (see page 12-181), or substitute a known-good BCM module (see page 12-8).

21. Check for Temporary DTCs or DTCs in the IMA SYSTEM with the HDS.

    Is DTC U1204 (55) indicated?

    YES—Check for poor connections or loose terminals at the PCM, the BCM module, and the MCM. If the BCM module was updated, substitute a known-good BCM module (see page 12-8), then recheck. If the BCM module was substituted, go to step 1.

    NO—Go to step 22.

22. Monitor the OBD STATUS for DTC U1204 (55) in the DTCs MENU with the HDS.

    Does the screen indicate PASSED?

    YES—If the BCM module was updated, troubleshooting is complete. If the BCM module was substituted, replace the original BCM module (see page 12-182). If any other Temporary DTCs or DTCs were indicated in step 21, go to the indicated DTC's troubleshooting. ■

    NO—If the screen indicates FAILED, check for poor connections or loose terminals at the PCM, the BCM module, and the MCM. If the BCM module was updated, substitute a known-good BCM module (see page 12-8), then recheck. If the BCM module was substituted, go to step 1. If the screen indicates NOT COMPLETED keep the ignition switch ON (II) until a result comes on.

DTC U1204 (95): IMA-CAN Malfunction (PCM-MCM)

NOTE:
- To verify this is the appropriate troubleshooting procedure, jump the SCS with the HDS and read the flash code, or change the HDS setup to show HM codes and read the HM code.
- Before you troubleshoot, record all freeze data, and review the general troubleshooting information (see page 12-5).

1. Turn the ignition switch to ON (II).
2. Check for Temporary DTCs or DTCs in the IMA SYSTEM with the HDS.

   Is DTC U0037 (98) indicated?

   YES—Do the troubleshooting for DTC U0037 (98) (see page 12-142).

   NO—Go to step 3.
3. Clear the DTC with the HDS (see page 12-6).
4. Check for Temporary DTCs or DTCs in the IMA SYSTEM with the HDS.

   Is DTC U1204 (95) indicated?

   YES—Go to step 5.

   NO—Intermittent failure, the system is OK at this time. Check for poor connections or loose terminals at the PCM, the BCM module, the A/C compressor driver, and the MCM. ■
5. Check for Temporary DTCs or DTCs in the IMA SYSTEM with the HDS.

   Are DTC U1204 (55) and U1204 (95) indicated at the same time?

   YES—Go to step 6.

   NO—Go to step 21.
6. Turn the ignition switch to LOCK (0).
7. Jump the SCS line with the HDS.
8. Disconnect PCM connector A (44P).
9. Turn the battery module switch OFF (see page 12-4).
10. Remove the IPU lid (see page 12-180).
11. Remove the BCM module (see page 12-182).
12. Disconnect the MCM 20P connector.
13. Connect PCM connector terminals A38 and A39 to body ground with a jumper wire.

PCM CONNECTOR A (44P)

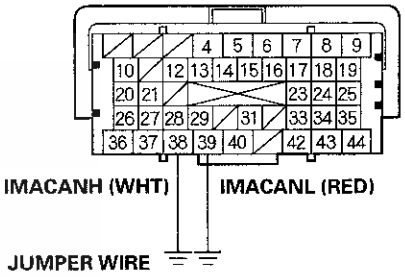

Terminal side of female terminals

(cont'd)

DTC Troubleshooting (cont'd)

14. Check for continuity between body ground and MCM 20P connector terminals No. 1 and No. 11 individually.

MCM 20P CONNECTOR

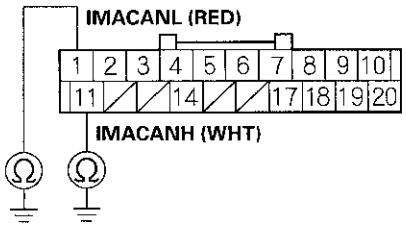

Wire side of female terminals

Is there continuity?

YES—Update the PCM if it does not have the latest software (see page 11-236), or substitute a known-good PCM (see page 11-7), then recheck. If symptom/indication goes away with an updated PCM, go to step 15. If the symptom/indication goes away with a known-good PCM, replace the original PCM (see page 11-238), then go to step 15.

NO—Repair open in the wire between the PCM and the MCM (No. 1, No. 11), then go to step 15.

15. Reconnect all connectors.

16. Reinstall the IPU lid (see page 12-180), then turn the battery module switch ON (see page 12-4).

17. Turn the ignition switch to ON (II).

18. Clear the DTC with the HDS (see page 12-6).

19. Check for Temporary DTCs or DTCs in the IMA SYSTEM with the HDS.

    Is DTC U1204 (95) indicated?

    YES—Check for poor connections or loose terminals at the PCM, the BCM module, and the MCM, then go to step 1.

    NO—Go to step 20.

20. Monitor the OBD STATUS for DTC U1204 (95) in the DTCs MENU with the HDS.

    Does the screen indicate PASSED?

    YES—Troubleshooting is complete. If any other Temporary DTCs or DTCs were indicated in step 19, go to the indicated DTC's troubleshooting.■

    NO—If the screen indicates FAILED, check for poor connections or loose terminals at the PCM, the BCM module, and the MCM, then go to step 1. If the screen indicates NOT COMPLETED, keep the ignition switch ON (II) until a result comes on.

21. Update the MCM if it does not have the latest software (see page 12-185), or substitute a known-good MCM (see page 12-8).

22. Check for Temporary DTCs or DTCs in the IMA SYSTEM with the HDS.

    Is DTC U1204 (95) indicated?

    YES—Check for poor connections or loose terminals at the PCM, the BCM module, and the MCM. If the MCM was updated, substitute a known-good MCM (see page 12-8), then recheck. If the MCM was substituted, go to step 1.

    NO—Go to step 23.

23. Monitor the OBD STATUS for DTC U1204 (95) in the DTCs MENU with the HDS.

    Does the screen indicate PASSED?

    YES—If the MCM was updated, troubleshooting is complete. If the MCM was substituted, replace the original MCM (see page 12-186). If any other Temporary DTCs or DTCs were indicated in step 22, go to the indicated DTC's troubleshooting. ■

    NO—If the screen indicates FAILED, check for poor connections or loose terminals at the PCM, the BCM module, and the MCM. If the MCM was updated, substitute a known-good MCM (see page 12-8), then recheck. If the MCM was substituted, go to step 1. If the screen indicates NOT COMPLETED, keep the ignition switch ON (II) until a result comes on.

DTC U1205 (75): IMA-CAN Malfunction (BCM Module-MCM)

NOTE:
- Before you troubleshoot, record all freeze data, and review the general troubleshooting information (see page 12-5).
- If DTC U1205 (75) is stored at the same time as DTC U0110 (101) and U0028 (108), the MCM relay is OFF forcibly.
- Information marked with an asterisk (*) applies to the '06-07 models

1. Turn the ignition switch to ON (II).

2. Check for Temporary DTCs or DTCs with the HDS.

   Is DTC U0037 (99) indicated?

   YES—Do the troubleshooting for DTC U0037 (99) (see page 12-142).

   NO—Go to step 3.

3. Clear the DTC with the HDS (see page 12-6).

4. Check for Temporary DTCs or DTCs with the HDS.

   Is DTC U1205 (75) indicated?

   YES—Go to step 5.

   NO—Intermittent failure, the system is OK at this time. Check for poor connections or loose terminals at the PCM, the BCM module, the A/C compressor driver, and the MCM. ■

5. Check for Temporary DTCs or DTCs with the HDS.

   Is DTC U0110 (101) indicated?

   YES—Go to step 12.

   NO—Go to step 6.

6. Turn the ignition switch to LOCK (0).

7. Turn the battery module switch OFF (see page 12-4).

8. Remove the IPU lid (see page 12-180).

9. Remove the BCM module (see page 12-182).

(cont'd)

DTC Troubleshooting (cont'd)

10. Disconnect the MCM 20P connector.

11. Check for continuity between BCM module connector terminal A20 and MCM 20P connector terminal No. 11, and between BCM module connector terminal A40 and MCM 20P connector terminal No. 1.

BCM MODULE CONNECTOR A (40P)

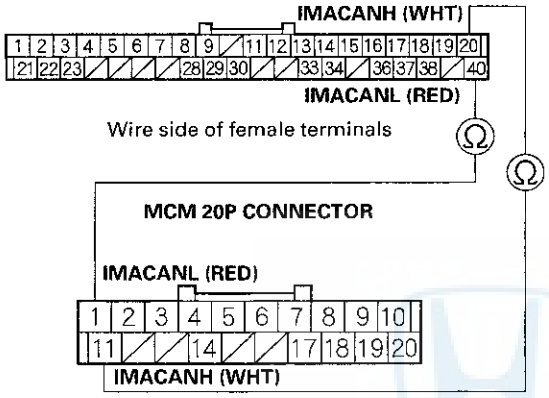

Is there continuity?

YES—Go to step 39.

NO—Repair open in the wire between the BCM module (A20, A40) and the MCM (No. 1, No. 11), then go to step 28.

12. Turn the ignition switch to LOCK (0).

13. Turn the battery module switch OFF (see page 12-4).

14. Remove the IPU lid (see page 12-180).

15. Check the MCM 20P connector.

Is the connection OK?

YES—Go to step 16.

NO—Repair the connection, then go to step 28.

16. Remove the BCM module (see page 12-182), and disconnect the MCM 20P connector.

17. Reconnect BCM module connector A (40P). Then turn the ignition switch to ON (II), and measure the voltage between MCM 20P connector terminals No. 18, No. 19*, and body ground within 1 second.

MCM 20P CONNECTOR

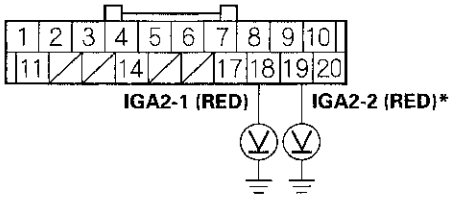

Wire side of female terminals

Is there 12 V battery voltage?

YES—Go to step 18.

NO—Go to step 20.

18. Turn the ignition switch to LOCK (0).

19. Check for continuity between body ground and MCM 20P connector terminals No. 2 and No. 9* individually.

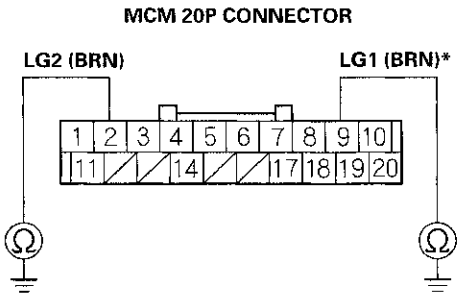

Wire side of female terminals

Is there continuity?

YES—Go to step 40.

NO—Repair open in the wire between the MCM (No. 2, No. 9*) and G102, then go to step 28.

20. Turn the ignition switch to LOCK (0).

21. Test MCM relay 2 (see page 22-64).

Is the relay OK?

YES—Go to step 22.

NO—Replace MCM relay 2, then go to step 28.

22. Check the No. 61 +B IMA2 (10 A) fuse.

Is the fuse OK?

YES—Go to step 23.

NO—Repair short to ground in the wire between the No. 61 +B IMA2 (10 A) fuse and MCM relay 2. Also replace the No. 61 +B IMA2 (10 A) fuse, then go to step 28.

23. Measure the voltage between MCM relay 2 4P connector terminal No. 2 and body ground.

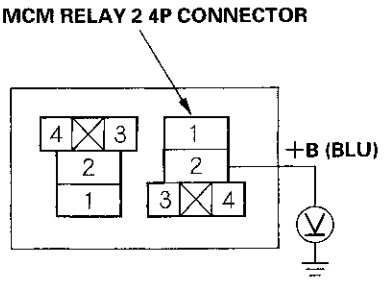

Wire side of female terminals

Is there 12 V battery voltage?

YES—Go to step 24.

NO—Repair open in the wire between MCM relay 2 and the No. 61 +B IMA2 (10 A) fuse, then go to step 28.

24. Check for continuity between MCM 20P connector terminals No. 18 and No. 19*, and MCM relay 2 4P connector terminal No. 1.

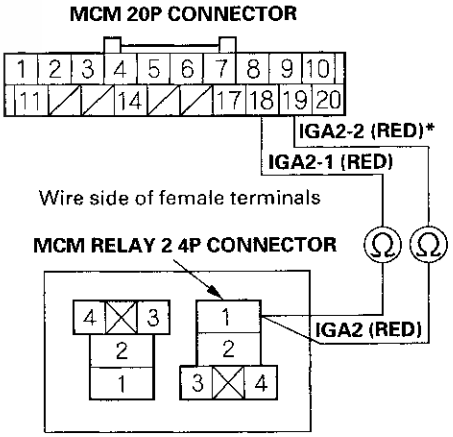

Wire side of female terminals

Is there continuity?

YES—Go to step 25.

NO—Repair open in the wire between MCM relay 2 and the MCM (No. 18, No. 19*), then go to step 28.

(cont'd)

DTC Troubleshooting (cont'd)

25. Disconnect BCM module connector A (40P).

26. Check for continuity between BCM module connector terminal A12 and MCM relay 2 4P connector terminal No. 3.

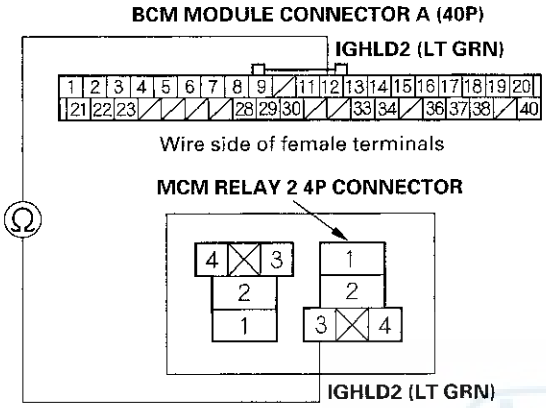

Is there continuity?

YES—Go to step 27.

NO—Repair open in the wire between MCM relay 2 and the BCM module (A12), then go to step 28.

27. Check for continuity between MCM relay 1 4P connector terminal No. 1 and MCM relay 2 4P connector terminal No. 4.

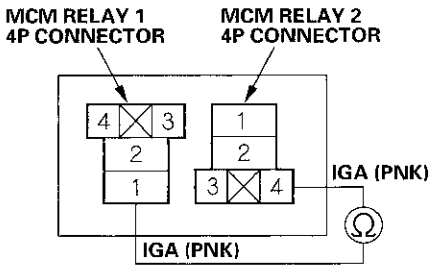

Is there continuity?

YES—Go to step 34.

NO—Repair open in the wire between MCM relay 1 and MCM relay 2, then go to step 28.

28. Reconnect all connectors.

29. Reinstall the IPU lid (see page 12-180), then turn the battery module switch ON (see page 12-4).

30. Turn the ignition switch to ON (II).

31. Clear the DTC with the HDS (see page 12-6).

32. Check for Temporary DTCs or DTCs with the HDS.

Is DTC U1205 (75) indicated?

YES—Check for poor connections or loose terminals at the PCM, the BCM module, and the MCM, then go to step 1.

NO—Go to step 33.

33. Monitor the OBD STATUS for DTC U1205 (75) in the DTCs MENU with the HDS.

Does the screen indicate PASSED?

YES—Troubleshooting is complete. If any other Temporary DTCs or DTCs were indicated in step 32, go to the indicated DTC's troubleshooting. ■

NO—If the screen indicates FAILED, check for poor connections or loose terminals at the PCM, the BCM module, and the MCM, then go to step 1. If the screen indicates NOT COMPLETED, keep the ignition switch ON (II) until a result comes on.

34. Reconnect all connectors.

35. Reinstall the IPU lid (see page 12-180), then turn the battery module switch ON (see page 12-4).

36. Update the BCM module if it does not have the latest software (see page 12-181), or substitute a known-good BCM module (see page 12-8).

37. Check for Temporary DTCs or DTCs with the HDS.

    Is DTC U1205 (75) indicated?

    YES—Check for poor connections or loose terminals at the PCM, the BCM module, and the MCM. If the BCM module was updated, substitute a known-good BCM module (see page 12-8), then recheck. If the BCM module was substituted, go to step 1.

    NO—Go to step 38.

38. Monitor the OBD STATUS for DTC U1205 (75) in the DTCs MENU with the HDS.

    Does the screen indicate PASSED?

    YES—If the BCM module was updated, troubleshooting is complete. If the BCM module was substituted, replace the original BCM module (see page 12-182). If any other Temporary DTCs or DTCs were indicated in step 38, go to the indicated DTC's troubleshooting. ■

    NO—If the screen indicates FAILED, check for poor connections or loose terminals at the PCM, the BCM module, and the MCM. If the BCM module was updated, substitute a known-good BCM module (see page 12-8), then recheck. If the BCM module was substituted, go to step 1. If the screen indicates NOT COMPLETE, keep the ignition switch ON (II) until a result comes on.

39. Reconnect all connectors.

40. Reinstall the IPU lid (see page 12-180), then turn the battery module switch ON (see page 12-4).

41. Update the MCM if it does not have the latest software (see page 12-185), or substitute a known-good MCM (see page 12-8).

42. Check for Temporary DTCs or DTCs with the HDS.

    Is DTC U1205 (75) indicated?

    YES—Check for poor connections or loose terminals at the PCM, the BCM module, and the MCM. If the MCM was updated, substitute a known-good MCM (see page 12-8), then recheck. If the MCM was substituted, go to step 1.

    NO—Go to step 43.

43. Monitor the OBD STATUS for DTC U1205 (75) in the DTCs MENU with the HDS.

    Does the screen indicate PASSED?

    YES—If the MCM was updated, troubleshooting is complete. If the MCM was substituted, replace the original MCM (see page 12-186). If any other Temporary DTCs or DTCs were indicated in step 42, go to the indicated DTC's troubleshooting. ■

    NO—If the screen indicates FAILED, check for poor connections or loose terminals at the PCM, the BCM module, and the MCM. If the MCM was updated, substitute a known-good MCM (see page 12-8), then recheck. If the MCM was substituted, go to step 1. If the screen indicates NOT COMPLETED, keep the ignition switch ON (II) until a result comes on.

DTC Troubleshooting (cont'd)

DTC U1206 (64): IMA-CAN Malfunction (BCM Module-MCM)

NOTE: Before you troubleshoot, record all freeze data, and review the general troubleshooting information (see page 12-5).

1. Turn the ignition switch to ON (II).
2. Check for Temporary DTCs or DTCs with the HDS.

   Is DTC U0037 (98) indicated?

   YES—Do the troubleshooting for DTC U0037 (98) (see page 12-142).

   NO—Go to step 3.
3. Clear the DTC with the HDS (see page 12-6).
4. Check for Temporary DTCs or DTCs with the HDS.

   Is DTC U1206 (64) indicated?

   YES—Go to step 5.

   NO—Intermittent failure, the system is OK at this time. Check for poor connections or loose terminals at the PCM, the BCM module, the A/C compressor driver, and the MCM.■
5. Turn the ignition switch to LOCK (0).
6. Turn the battery module switch OFF (see page 12-4).
7. Remove the IPU lid (see page 12-180).
8. Remove the BCM module (see page 12-182).
9. Disconnect the MCM 20P connector.
10. Check for continuity between BCM module connector terminal A20 and MCM 20P connector terminal No. 11, and between BCM module connector terminal A40 and MCM 20P connector terminal No. 1.

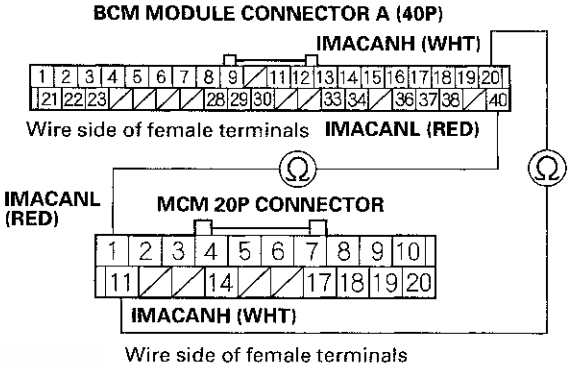

Is there continuity?

YES—Go to step 17.

NO—Repair open in the wire between the PCM, the BCM module (A20, A40), and the MCM (No. 1, No. 11), then go to step 11.

11. Reconnect all connectors.

12. Reinstall the IPU lid (see page 12-180), then turn the battery module switch ON (see page 12-4).

13. Turn the ignition switch to ON (II).

14. Clear the DTC with the HDS (see page 12-6).

15. Check for Temporary DTCs or DTCs with the HDS.

    Is DTC U1206 (64) indicated?

    YES—Check for poor connections or loose terminals at the PCM, the BCM module, and the MCM, then go to step 1.

    NO—Go to step 16.

16. Monitor the OBD STATUS for DTC U1206 (64) in the DTCs MENU with the HDS.

    Does the screen indicate PASSED?

    YES—Troubleshooting is complete. If any other Temporary DTCs or DTCs were indicated in step 15, go to the indicated DTC's troubleshooting. ■

    NO—If the screen indicates FAILED, check for poor connections or loose terminals at the PCM, the BCM module, and the MCM, then go to step 1. If the screen indicates NOT COMPLETED, keep the ignition switch ON (II) until a result comes on.

17. Reconnect all connectors.

18. Reinstall the IPU lid (see page 12-180), then turn the battery module switch ON (see page 12-4).

19. Update the BCM module if it does not have the latest software (see page 12-181), or substitute a known-good BCM module (see page 12-8).

20. Check for Temporary DTCs or DTCs with the HDS.

    Is DTC U1206 (64) indicated?

    YES—Check for poor connections or loose terminals at the PCM, the BCM module, and the MCM. If the BCM module was updated, substitute a known-good BCM module (see page 12-8), then recheck. If the BCM module was substituted, go to step 1.

    NO—Go to step 21.

21. Monitor the OBD STATUS for DTC U1206 (64) in the DTCs MENU with the HDS.

    Does the screen indicate PASSED?

    YES—If the BCM module was updated, troubleshooting is complete. If the BCM module was substituted, replace the original BCM module (see page 12-182). If any other Temporary DTCs or DTCs were indicated in step 20, go to the indicated DTC's troubleshooting. ■

    NO—If the screen indicates FAILED, check for poor connection or loose terminals at the PCM, the BCM module, and the MCM. If the BCM module was updated, substitute a known-good BCM module (see page 12-8), then recheck. If the BCM module was substituted, go to step 1. If the screen indicates NOT COMPLETED, keep the ignition switch ON (II) until a result comes on.

DTC Troubleshooting (cont'd)

DTC U1207 (80): IMA-CAN Malfunction (A/C Compressor Driver-BCM Module)

NOTE: Before you troubleshoot, record all freeze data, and review the general troubleshooting information (see page 12-5).

1. Turn the ignition switch to ON (II).
2. Check for Temporary DTCs or DTCs with the HDS.

   Is DTC U0037 (99) indicated?

   YES—Do the troubleshooting for DTC U0037 (99) (see page 12-142).

   NO—Go to step 3.
3. Clear the DTC with the HDS (see page 12-6).
4. Check for Temporary DTCs or DTCs with the HDS.

   Is DTC U1207 (80) indicated?

   YES—Go to step 5.

   NO—Intermittent failure, the system is OK at this time. Check for poor connections or loose terminals at the BCM module, the A/C compressor driver, and the PCM.■
5. Turn the ignition switch to LOCK (0).
6. Turn the battery module switch OFF (see page 12-4).
7. Remove the IPU lid (see page 12-180).
8. Check the A/C compressor driver 4P connector.

   Is the connector OK?

   YES—Go to step 9.

   NO—Repair the connector, then go to step 19.
9. Check the No. 22 IG1 HAC (A/C) (7.5 A) fuse in the under-dash fuse/relay box.

   Is the fuse OK?

   YES—Go to step 10.

   NO—Repair short to ground in the wire between the A/C compressor driver and the No. 22 IG1 HAC (A/C) (7.5 A) fuse. Also replace the No. 22 IG1 HAC (A/C) fuse, then go to step 19.
10. Disconnect the A/C compressor driver 4P connector.
11. Disconnect BCM module connector A (40P).
12. Check for continuity between BCM module connector terminal A20 and A/C compressor driver 4P connector terminal No. 2.

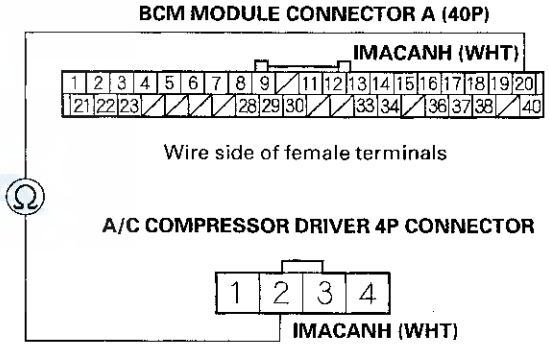

Is there continuity?

YES—Go to step 13.

NO—Repair open in the wire between the BCM module (A20) and the A/C compressor driver, then go to step 19.

13. Check for continuity between BCM module connector terminal A40 and A/C compressor driver 4P connector terminal No. 3.

BCM MODULE CONNECTOR A (40P)

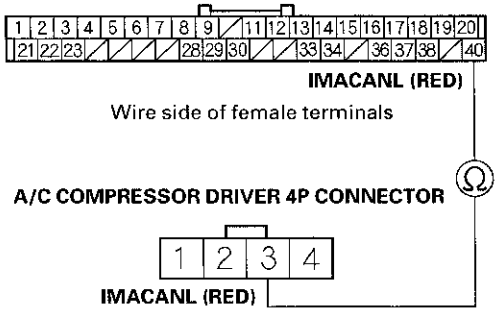

Is there continuity?

YES—Go to step 14.

NO—Repair open in the wire between the BCM module (A40) and the A/C compressor driver, then go to step 19.

14. Turn the ignition switch to ON (II).

15. Measure the voltage between A/C compressor driver 4P connector terminal No. 4 and body ground.

A/C COMPRESSOR DRIVER 4P CONNECTOR

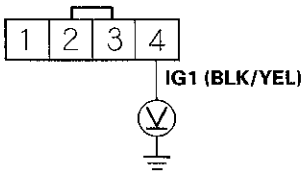

Wire side of female terminals

Is there 12 V battery voltage?

YES—Go to step 16.

NO—Repair open in the wire between the A/C compressor driver and the No. 22 IG1 HAC (A/C) (7.5 A) fuse, then go to step 18.

16. Turn the ignition switch to LOCK (0).

17. Check for continuity between A/C compressor driver 4P connector terminal No. 1 and body ground.

A/C COMPRESSOR DRIVER 4P CONNECTOR

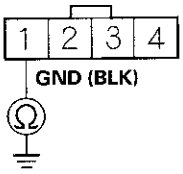

Wire side of female terminals

Is there continuity?

YES—Replace the A/C compressor driver (see page 21-109), then go to step 19.

NO—Repair open in the wire between the A/C compressor driver and G902, then go to step 19.

(cont'd)

DTC Troubleshooting (cont'd)

18. Turn the ignition switch to LOCK (0).

19. Reconnect all connectors.

20. Reinstall the IPU lid (see page 12-180), then turn the battery module switch ON (see page 12-4).

21. Turn the ignition switch to ON (II).

22. Clear the DTC with the HDS (see page 12-6).

23. Check for Temporary DTCs or DTCs with the HDS.

    Is DTC U1207 (80) indicated?

    YES—Check for poor connections or loose terminals at the BCM module, the A/C compressor driver, and the PCM, then go to step 1.

    NO—Go to step 24.

24. Monitor the OBD STATUS for DTC U1207 (80) in the DTCs MENU with the HDS.

    Does the screen indicate PASSED?

    YES—Troubleshooting is complete. If any other Temporary DTCs or DTCs were indicated in step 23, go to the indicated DTC's troubleshooting. ■

    NO—If the screen indicates FAILED, check for poor connections or loose terminals at the BCM module, the A/C compressor driver, and the PCM, then go to step 1. If the screen indicates NOT COMPLETED, keep the ignition switch ON (II) until a result comes on.

DTC U1220 (34): DC-DC Converter Lost Communication with BCM Module

NOTE: Before you troubleshoot, record all freeze data, and review the general troubleshooting information (see page 12-5).

1. Turn the ignition switch to ON (II).

2. Monitor the OBD STATUS for DTC U1220 (34) in the DTCs MENU with the HDS.

   Does the screen indicate FAILED?

   YES—Go to step 3.

   NO—If the screen indicates PASSED, intermittent failure, the system is OK at this time. Check for poor connections or loose terminals at the DC-DC converter and the BCM module. If the screen indicates NOT COMPLETED, go to step 1 and recheck.

3. Turn the ignition switch to LOCK (0).

4. Turn the battery module switch OFF (see page 12-4).

5. Remove the IPU lid (see page 12-180).

6. Disconnect the DC-DC converter 4P connector.

7. Disconnect BCM module connector A (40P).

8. Check for continuity between BCM module connector terminal A19 and body ground.

BCM MODULE CONNECTOR A (40P)

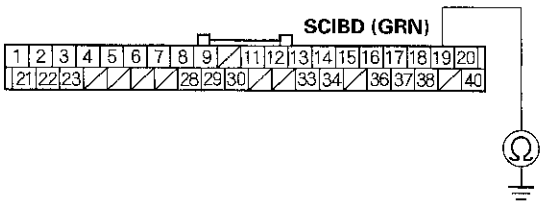

Wire side of female terminals

Is there continuity?

YES—Repair short in the wire between the BCM module (A19) and the DC-DC converter, then go to step 16.

NO—Go to step 9.

9. Check for continuity between BCM module connector terminal A19 and DC-DC converter 4P connector terminal No. 3.

BCM MODULE CONNECTOR A (40P)

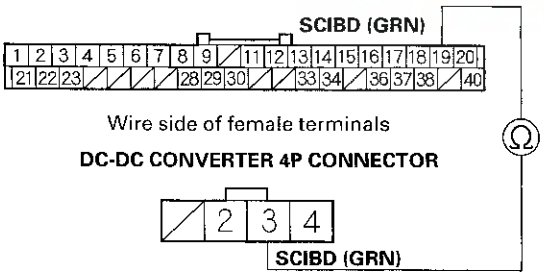

Wire side of female terminals

DC-DC CONVERTER 4P CONNECTOR

Wire side of female terminals

Is there continuity?

YES—Go to step 10.

NO—Repair open in the wire between the BCM module (A19) and the DC-DC converter, then go to step 16.

10. Substitute a known-good DC-DC converter (see page 12-182).

11. Reconnect all connectors.

12. Reinstall the IPU lid (see page 12-180), then turn the battery module switch ON (see page 12-4).

13. Turn the ignition switch to ON (II).

14. Clear the DTC with the HDS (see page 12-6).

15. Check for Temporary DTCs or DTCs with the HDS.

Is DTC U1220 (34) indicated?

YES—Go to step 22.

NO—Replace the original DC-DC converter (see page 12-182), then go to step 16.

16. Reconnect all connectors.

17. Reinstall the IPU lid (see page 12-180), then turn the battery module switch ON (see page 12-4).

18. Turn the ignition switch to ON (II).

19. Clear the DTC with the HDS (see page 12-6).

20. Check for Temporary DTCs or DTCs with the HDS.

Is DTC U1220 (34) indicated?

YES—Check for poor connections or loose terminals at the DC-DC converter and the BCM module, then go to step 1.

NO—Go to step 21.

21. Monitor the OBD STATUS for DTC U1220 (34) in the DTCs MENU with the HDS.

Does the screen indicate PASSED?

YES—Troubleshooting is complete. If any other Temporary DTCs or DTCs were indicated in step 20, go to the indicated DTC's troubleshooting.■

NO—If the screen indicates FAILED, check for poor connections or loose terminals at the DC-DC converter and the BCM module, then go to step 1. If the screen indicates NOT COMPLETED, keep the ignition switch ON (II) until a result comes on.

(cont'd)

DTC Troubleshooting (cont'd)

22. Update the BCM module if it does not have the latest software (see page 12-181), or substitute a known-good BCM module (see page 12-8).

23. Check for Temporary DTCs or DTCs with the HDS.

    Is DTC U1220 (34) indicated?

    YES—Check for poor connections or loose terminals at the DC-DC converter and the BCM module. If the BCM module was updated, substitute a known-good BCM module (see page 12-8), then recheck. If the BCM module was substituted, go to step 1.■

    NO—Go to step 24.

24. Monitor the OBD STATUS for DTC U1220 (34) in the DTCs MENU with the HDS.

    Does the screen indicate PASSED?

    YES—If the BCM module was updated, troubleshooting is complete. If the BCM module was substituted, replace the original BCM module (see page 12-182). If any other Temporary DTCs or DTCs were indicated in step 23, go to the indicated DTC's troubleshooting.■

    NO—If the screen indicates FAILED, check for poor connections or loose terminals at the DC-DC converter and the BCM module. If the BCM module was updated, substitute a known-good BCM module (see page 12-8), then recheck. If the BCM module was substituted, go to step 1. If the screen indicates NOT COMPLETED, keep the ignition switch ON (II) until a result comes on.

DTC U1221 (35): BCM Module Lost Communication with DC-DC Converter

NOTE: Before you troubleshoot, record all freeze data, and review the general troubleshooting information (see page 12-5).

1. Turn the ignition switch to ON (II).

2. Monitor the OBD STATUS for DTC U1221 (35) in the DTCs MENU with the HDS.

   Does the screen indicate FAILED?

   YES—Go to step 3.

   NO—If the screen indicates PASSED, intermittent failure, the system is OK at this time. Check for poor connections or loose terminals at the DC-DC converter and the BCM module. If the screen indicates NOT COMPLETED, go to step 1 and recheck.

3. Turn the ignition switch to LOCK (0).

4. Turn the battery module switch OFF (see page 12-4).

5. Remove the IPU lid (see page 12-180).

6. Check the DC-DC converter terminal (ORN wire) (A) connection.

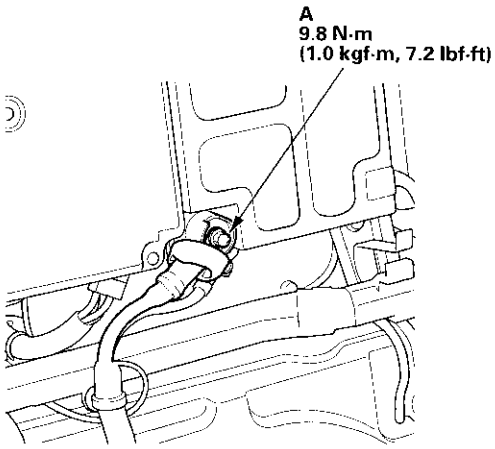

Is the connection OK?

YES—Go to step 7.

NO—Repair the connection, then go to step 21.

7. Disconnect the DC-DC converter 4P connector.

8. Turn the ignition switch to ON (II).

9. Measure the voltage between DC-DC converter 4P connector terminal No. 2 and body ground.

DC-DC CONVERTER 4P CONNECTOR

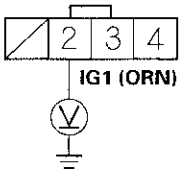

Wire side of female terminals

Is there battery voltage?

YES—Go to step 10.

NO—
- Repair open in the wire between the DC-DC converter and the No. 3 ALTERNATOR (10 A) fuse in the under-dash fuse/relay box, then go to step 20.
- Check the No. 3 ALTERNATOR (10 A) fuse. If needed, replace it, then go to step 20.

10. Turn the ignition switch to LOCK (0).

11. Disconnect BCM module connector A (40P).

(cont'd)

DTC Troubleshooting (cont'd)

12. Check for continuity between BCM module connector terminal A18 and body ground.

BCM MODULE CONNECTOR A (40P)

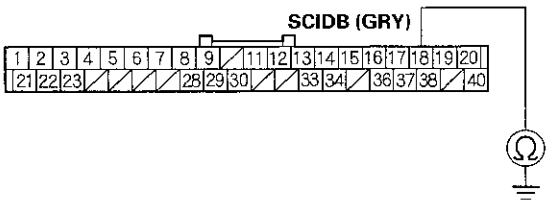

Wire side of female terminals

Is there continuity?

YES—Repair short to ground in the wire between the BCM module (A18) and the DC-DC converter, then go to step 21.

NO—Go to step 13.

13. Check for continuity between BCM module connector terminal A18 and DC-DC converter 4P connector terminal No. 4.

BCM MODULE CONNECTOR A (40P)

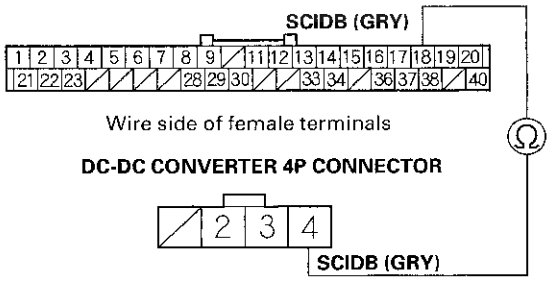

Wire side of female terminals

DC-DC CONVERTER 4P CONNECTOR

Wire side of female terminals

Is there continuity?

YES—Go to step 14.

NO—Repair open in the wire between the BCM module (A18) and the DC-DC converter, then go to step 21.

14. Substitute a known-good DC-DC converter (see page 12-182).

15. Reconnect all connectors.

16. Reinstall the IPU lid (see page 12-180), then turn the battery module switch ON (see page 12-4).

17. Turn the ignition switch to ON (II).

18. Clear the DTC with the HDS (see page 12-6).

19. Check for Temporary DTCs or DTCs with the HDS.

Is DTC U1221 (35) indicated?

YES—Go to step 27.

NO—Replace the original DC-DC converter (see page 12-182), then go to step 20.

20. Turn the ignition switch to LOCK (0).

21. Reconnect all connectors.

22. Reinstall the IPU lid (see page 12-180), then turn the battery module switch ON (see page 12-4).

23. Turn the ignition switch to ON (II).

24. Clear the DTC with the HDS (see page 12-6).

25. Check for Temporary DTCs or DTCs with the HDS.

Is DTC U1221 (35) indicated?

YES—Check for poor connections or loose terminals at the DC-DC converter and the BCM module, then go to step 1.

NO—Go to step 26.

26. Monitor the OBD STATUS for DTC U1221 (35) in the DTCs MENU with the HDS.

    Does the screen indicate PASSED?

    YES—Troubleshooting is complete. If any other Temporary DTCs or DTCs were indicated in step 25, go to the indicated DTC's troubleshooting.■

    NO—If the screen indicates FAILED, check for poor connections or loose terminals at the DC-DC converter and the BCM module, then go to step 1. If the screen indicates NOT COMPLETED, keep the ignition switch ON (II) until a result comes on.

27. Reconnect all connectors.

28. Reinstall the IPU lid (see page 12-180), then turn the battery module switch ON (see page 12-4).

29. Update the BCM module if it does not have the latest software (see page 12-181), or substitute a known-good BCM module (see page 12-8).

30. Check for Temporary DTCs or DTCs with the HDS.

    Is DTC U1221 (35) indicated?

    YES—Check for poor connections or loose terminals at the DC-DC converter and the BCM module. If the BCM module was updated, substitute a known-good BCM module (see page 12-8), then recheck. If the BCM module was substituted, go to step 1.■

    NO—Go to step 31.

31. Monitor the OBD STATUS for DTC U1221 (35) in the DTCs MENU with the HDS.

    Does the screen indicate PASSED?

    YES—If the BCM module was updated, troubleshooting is complete. If the BCM module was substituted, replace the original BCM module (see page 12-182). If any other Temporary DTCs or DTCs were indicated in step 30, go to the indicated DTC's troubleshooting.■

    NO—If the screen indicates FAILED, check for poor connections or loose terminals at the DC-DC converter and the BCM module. If the BCM module was updated, substitute a known-good BCM module (see page 12-8), then recheck. If the BCM module was substituted, go to step 1. If the screen indicates NOT COMPLETED, keep the ignition switch ON (II) until a result comes on.

IMA System Indicator Circuit Troubleshooting

NOTE:
- If the IMA system indicator stays on or never comes on, do this troubleshooting (if no DTCs are set).
- Information marked with an asterisk (*) applies to the '06-07 models.

1. Turn the ignition switch to ON (II), and watch the IMA system indicator.

   Does the IMA system indicator come on?

   YES—Go to step 2.

   NO—Go to step 5.

2. Turn the ignition switch to LOCK (0).

3. Turn the ignition switch to ON (II), wait 2 seconds, and watch the IMA system indicator.

   Does the IMA system indicator come on and stay on?

   YES—Go to step 4.

   NO—The IMA system indicator circuit is OK. ■

4. Check for Temporary DTCs or DTCs with the HDS.

   Are any Temporary DTCs or DTCs indicated?

   YES—Go to the indicated DTC's troubleshooting.

   NO—Go to step 5.

5. Do the gauge self-diagnostic function (see page 22-223).

   Does the IMA system indicator flash?

   YES—Go to step 6.

   NO—Substitute a known-good gauge control module, and recheck. If the IMA system indicator circuit is OK, replace the original gauge control module. ■

6. Check the 12 V battery terminal connections.

   Are the connections OK?

   YES—Go to step 7.

   NO—Repair the connections, or replace the 12 V battery. ■

7. Turn the ignition switch to LOCK (0).

8. Turn the battery module switch OFF (see page 12-4).

9. Remove the IPU lid (see page 12-180).

10. Disconnect BCM module connector A (40P).

11. Turn the ignition switch to ON (II).

12. Measure the voltage between body ground and BCM module connector terminal A29.

BCM MODULE CONNECTOR A (40P)

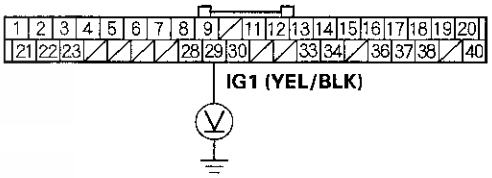

Wire side of female terminals

Is there 12 V battery voltage?

YES—Go to step 13.

NO—
- Repair open or short in the wire between the No. 10 METER (7.5 A) fuse in the under-dash fuse/relay box and the BCM module (A29).
- Check the No. 10 METER (7.5 A) fuse. If needed, replace it. ■

13. Turn the ignition switch to LOCK (0).

14. Reconnect BCM module connector A (40P).

15. Turn the ignition switch to ON (II).

16. Measure the voltage between body ground and BCM module connector terminals A2* and A3.

BCM MODULE CONNECTOR A (40P)

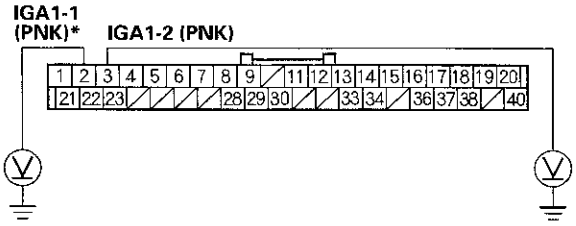

Wire side of female terminals

Is there 12 V battery voltage?

YES—Go to step 17.

NO—Go to step 20.

17. Turn the ignition switch to LOCK (0).

18. Disconnect BCM module connector A (40P).

19. Check for continuity between body ground and BCM module connector terminals A8*, A9, A22*, and A23 individually.

BCM MODULE CONNECTOR A (40P)

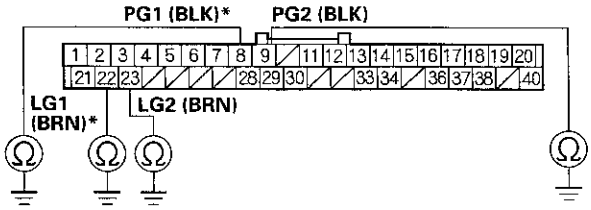

Wire side of female terminals

Is there continuity?

YES—Update the BCM module if it does not have the latest software (see page 12-181), or substitute a known-good BCM module (see page 12-8), then recheck. If the symptom/indication goes away with a known-good BCM module, replace the original BCM module (see page 12-182).■

NO—Repair open in the wire between G902 and the BCM module (A8*, A9), or between G102 and the BCM module (A22*, A23).■

20. Turn the ignition switch to LOCK (0).

21. Remove MCM relay 1 (A).

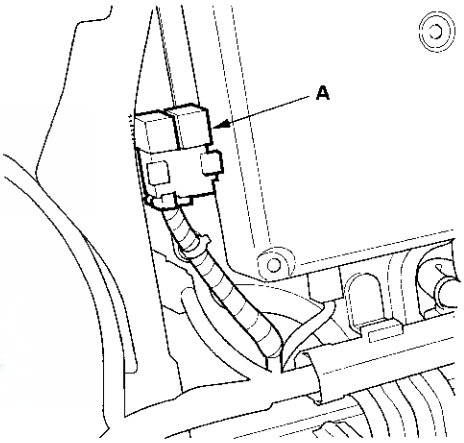

22. Test MCM relay 1 (see page 22-64).

Is the relay OK?

YES—Go to step 23.

NO—Replace MCM relay 1.■

(cont'd)

IMA System Indicator Circuit Troubleshooting (cont'd)

23. Measure the voltage between body ground and MCM relay 1 4P connector terminals No. 2 and No. 4 individually.

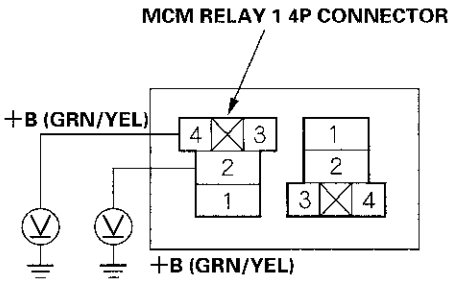

Wire side of female terminals

Is there 12 V battery voltage?

YES—Go to step 24.

NO—
- Repair open or short to ground in the wire between the No. 62 +B IMA (7.5 A) and MCM relay 1.■
- Check the No. 62 +B IMA (7.5 A) fuse. If needed, replace it.■
- Repair short to ground in the wire between MCM relay 1, MCM relay 2, and the BCM module (A2˙, A3, A11).■

24. Reinstall MCM relay 1.

25. Disconnect BCM module connector A (40P).

26. Turn the ignition switch to ON (II).

27. Measure the voltage between body ground and BCM module connector terminal A11.

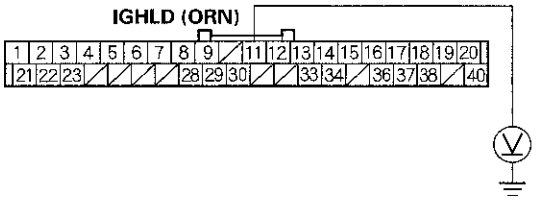

Wire side of female terminals

Is there 12 V battery voltage?

YES—Go to step 28.

NO—Repair open in the wire between MCM relay 1 and the BCM module (A11).■

28. Turn the ignition switch to LOCK (0).

29. Check for continuity between BCM module connector terminal A2˙ and A3 and MCM relay 1 4P connector terminal No. 1.

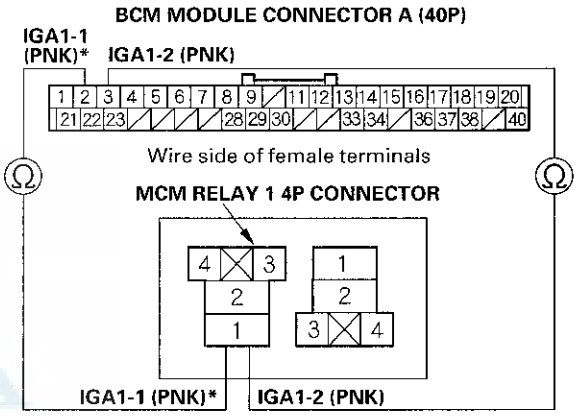

Wire side of female terminals

Is there continuity?

YES—Update the BCM module if it does not have the latest software (see page 12-181), or substitute a known-good BCM module (see page 12-8), then recheck. If the symptom/indication goes away with a known-good BCM module, replace the original BCM module (see page 12-182).■

NO—Repair open in the wire between MCM relay 1 and the BCM module (A2˙, A3).■

Charging System Indicator Circuit Troubleshooting

NOTE:
- If the 12 V battery voltage is too low to operate the starter motor, the charging system indicator may come on.
- If the charging system indicator stays on or never comes on, do this troubleshooting (if no DTC's are set).

1. Turn the ignition switch to ON (II).

2. Check for Temporary DTCs or DTCs with the HDS.

   Are any Temporary DTCs or DTCs indicated?

   YES—Go to the indicated DTC's troubleshooting.■

   NO—Go to step 3.

3. Turn the ignition switch to LOCK (0).

4. Check the 12 V battery (see page 22-61).

   Is the 12 V battery OK?

   YES—Go to step 5.

   NO—Charge or replace the 12 V battery.■

5. Turn the ignition switch to ON (II).

6. Check the HISTORY OF DC-DC CONVERTER STOP and the HISTORY OF IPU MODULE FAN STOP with the HDS.

   Does the screen indicate OFF?

   YES—Go to step 7.

   NO—Intermittent failure, the system is OK at this time.■

7. Turn the ignition switch to ON (II), and watch the charging system indicator.

   Does the charging system indicator come on?

   YES—Go to step 8.

   NO—Do the gauge self-diagnostic function (see page 22-223).■

8. Start the engine, and watch the charging system indicator.

   Does the charging system indicator go off?

   YES—The charging system indicator circuit is OK.■

   NO—Go to step 9.

9. Do the gauge self-diagnostic function (see page 22-223).

   Does the charging system indicator flash?

   YES—Go to step 10.

   NO—Substitute a known-good gauge control module (tach), and recheck. If the charging system indicator circuit is OK, replace the original gauge control module (see page 22-255).■

10. Run the engine at idle for 2 minutes.

11. Check for Temporary DTCs or DTCs with the HDS.

    Are any Temporary DTCs or DTCs indicated?

    YES—Go to the indicated DTC's troubleshooting.■

    NO—Go to step 12.

12. Watch the charging system indicator.

    Does the charging system indicator go off?

    YES—The IMA battery was in temporary shut down mode, due to temperature extremes.■

    NO—Go to step 13.

13. Check the MPI VOLTAGE in the DATA LIST with the HDS.

    Is about 99—210 V indicated?

    YES—Check the connections of the DC-DC converter.■

    NO—Replace the DC-DC converter (see page 12-182).■

IPU Lid Removal/Installation

NOTE: Put on gloves to protect your hands from electrical shock.

IMA components are located in this area. The IMA is a high-voltage system. You must be familiar with the IMA system before working on or around it. Make sure you have read the IMA service precautions before doing repairs or service (see page 12-3).

1. Remove the rear seat-back and the rear seat cushion (see page 20-118).
2. Turn the battery module switch OFF (see page 12-4).
3. Remove the bolts (A) and (B).

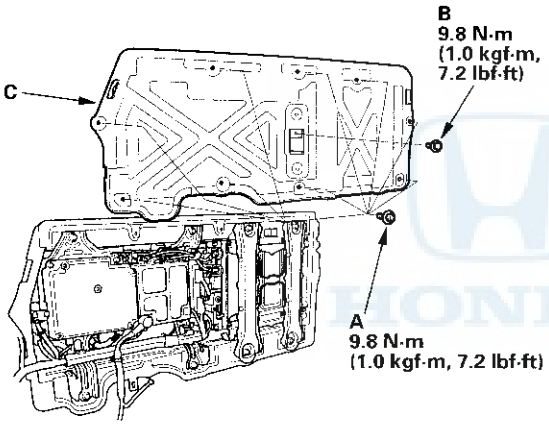

4. Remove the IPU lid (C).
5. Install the parts in the reverse order of removal.
6. Before the battery module switch is turned ON, make sure all the high voltage circuits are connected properly. Then push the button (A), and turn the battery module switch ON.

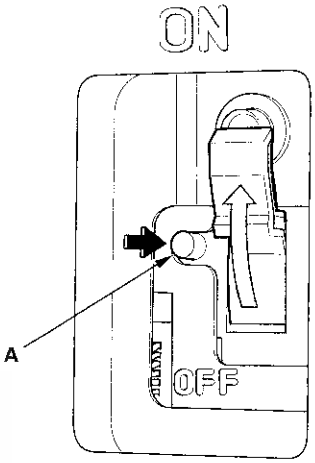

BCM Module Update

Special Tools Required
- Honda diagnostic system (HDS) tablet tester
- Honda interface module (HIM) and an iN workstation with the latest HDS software version
- HDS pocket tester
- GNA600 and an iN workstation with the latest HDS software version

Any one of the above updating tools can be used.

Use this procedure when you need to update the BCM module during a troubleshooting procedure.
The BCM module has the programs for the IMA battery condition monitor.
Update the BCM module if its program is not the latest.

NOTE:
- Make sure the HDS/iN workstation has the latest HDS software version.
- To ensure the latest programs are installed, do a BCM module update whenever the BCM module is substituted or replaced.
- Select IMA motor and/or IMA battery in the HIM BCM module update menu.
- You can not update a BCM module with the program it already has. It will only accept a new program.
- Before you update the BCM module, make sure the vehicle's 12 V battery is fully charged.
- Do not turn the ignition switch to ACC (I) or to LOCK (0) while updating the BCM module. If you do, the BCM module can be damaged.
- To prevent BCM module damage, do not operate anything electrical (audio system, brakes, A/C, power windows, door locks, etc.) during the update.
- If you need to diagnose the Honda interface module (HIM) because the HIM's red (#3) light came on or was flashing during the update, leave the ignition switch in ON (II) when you disconnect the HIM from the data link connector (DLC). This will prevent BCM module damage.

1. Turn the ignition switch to ON (II). Do not start the engine.

2. Connect the HDS or the Honda Interface Module (HIM) to the data link connector (DLC) (A) located under the driver's side of dashboard.

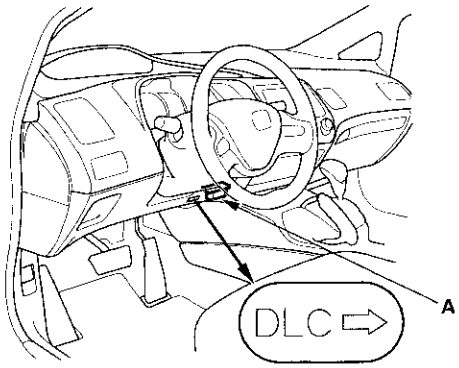

3. Make sure the HDS communicates with the vehicle, the BCM module, and the MCM. If it doesn't, troubleshooting the DLC circuit (see page 11-213).

4. Do the BCM module update procedure as described on the HIM label and in the CM update system.

BCM Module Removal/Installation

NOTE: Put on gloves to protect your hands from electrical shock.

IMA components are located in this area. The IMA is a high-voltage system. You must be familiar with the IMA system before working on or around it. Make sure you have read the IMA service precautions before doing repairs or service (see page 12-3).

1. Remove the IPU lid (see page 12-180).
2. Disconnect BCM module connectors (A).

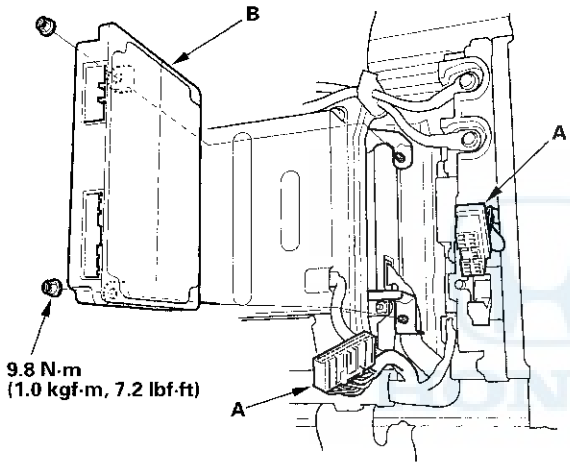

3. Remove the BCM module (B).
4. Install the parts in the reverse order of removal.

DC-DC Converter Removal/ Installation

NOTE: Put on gloves to protect your hands from electrical shock.

IMA components are located in this area. The IMA is a high-voltage system. You must be familiar with the IMA system before working on or around it. Make sure you have read the IMA service precautions before doing repairs or service (see page 12-3).

1. Make sure the ignition switch in LOCK (0).
2. Do the battery terminal disconnection procedure (see page 22-62).
3. Remove the IPU lid (see page 12-180).

4. Disconnect the DC-DC converter connector (A).

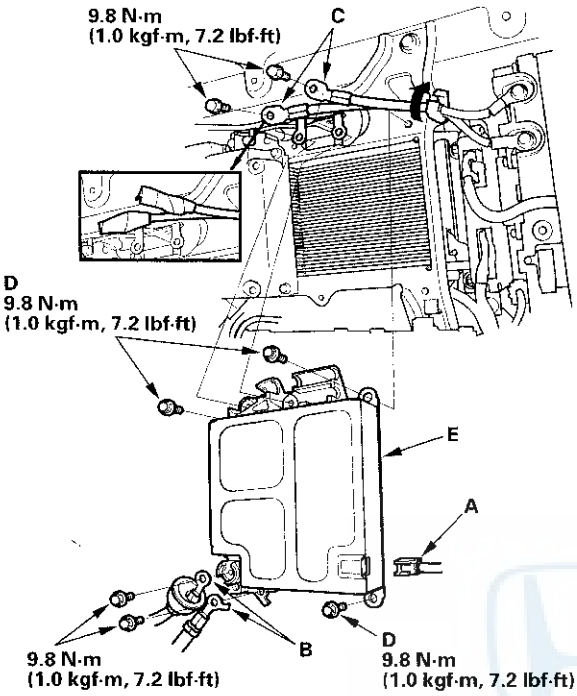

5. Remove the wires (B) and (C).

6. Remove the bolts (D), and the DC-DC converter (E).

7. Install the parts in the reverse order of removal.

8. Do the battery terminal reconnection procedure (see page 22-62).

   NOTE: If the IMA battery level gauge (BAT) displays no segments, start the engine, and hold it between 3,500 rpm and 4,000 rpm without load (in P or N) until the BAT displays at least three segments.

Power Control Unit (PCU) Removal/ Installation

NOTE: Put on gloves to protect your hands from electrical shock.

IMA components are located in this area. The IMA is a high-voltage system. You must be familiar with the IMA system before working on or around it. Make sure you have read the IMA service precautions before doing repairs or service (see page 12-3).

1. Remove the IPU lid (see page 12-180).

2. Disconnect the DC-DC converter connector (A).

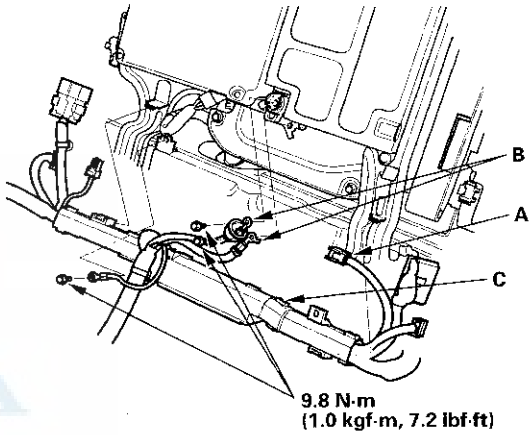

3. Remove the wire (B).

4. Lift the IPU wire harness (C).

(cont'd)

Power Control Unit (PCU) Removal/Installation (cont'd)

5. Remove the PCU cover (A).

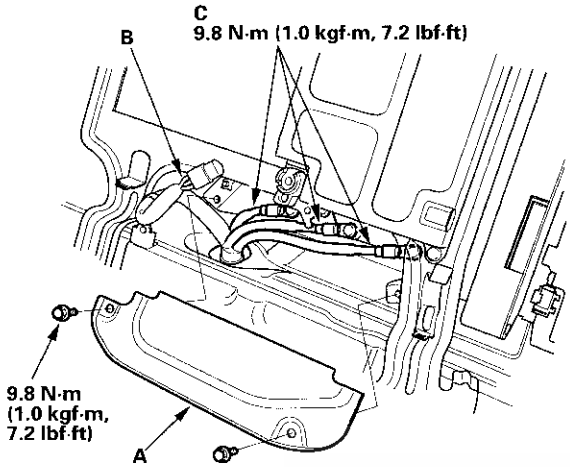

6. Remove the A/C compressor power cable connector (B), and the motor power cables (C), then wrap them with insulating tape.

   NOTE: Check the position of the U phase, V phase, and W phase cables before you disconnect them.

7. Remove the BCM module (see page 12-182).

8. Remove the DC-DC converter (see page 12-182).

9. Remove the A/C compressor driver (see page 21-109).

10. Remove the PCU case mounting bolts (A).

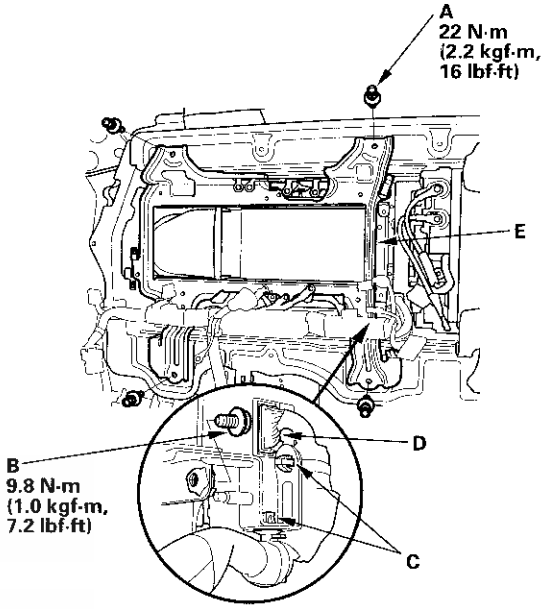

11. Remove the bolt (B) and the clamps (C), then disconnect the MCM connector (D).

12. Remove the PCU (E).

13. Install the parts in the reverse order of removal.

14. Do the motor rotor position calibration (see page 12-6).

Power Control Unit (PCU) Disassembly/Reassembly

NOTE: Put on gloves to protect your hands from electrical shock.

IMA components are located in this area. The IMA is a high-voltage system. You must be familiar with the IMA system before working on or around it. Make sure you have read the IMA service precautions before doing repairs or service (see page 12-3).

1. Remove the PCU assembly (see page 12-183).

2. Remove the cover (A), the MCM (B), the busplate (C), and the IPU air unit (D).

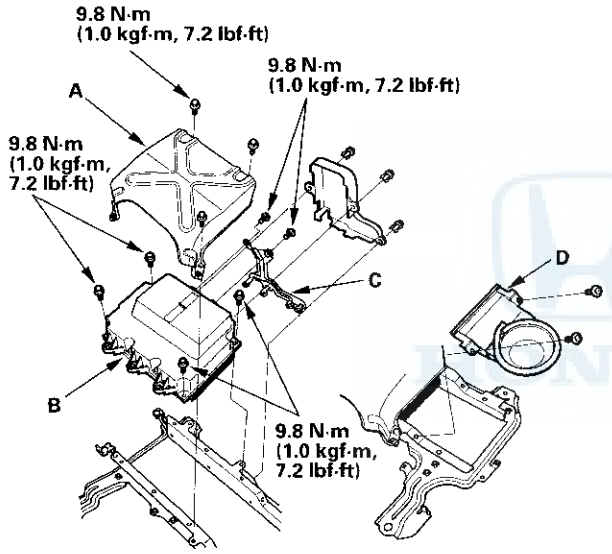

3. Install the parts in the reverse order of removal.

MCM Update

Special Tools Required
- Honda diagnostic system (HDS) tablet tester
- Honda interface module (HIM) and an iN workstation with the latest HDS software version
- HDS pocket tester
- GNA600 and an iN workstation with the latest HDS software version

Any one of the above updating tools can be used.

Use this procedure when you need to update the MCM during a troubleshooting procedure.
The MCM has the programs for the IMA motor control. Update the MCM if its program is not the latest.

NOTE:
- Make sure the HDS/iN workstation has the latest HDS software version.
- To ensure the latest programs are installed, do an MCM update whenever the MCM is substituted or replaced.
- Select IMA motor and/or IMA battery in the HIM MCM update menu.
- You can not update a MCM with the program it already has. It will only accept a new program.
- Before you update the MCM, make sure the vehicle's 12 V battery is fully charged.
- Do not turn the ignition switch to ACC (I) or to LOCK (0) while updating the MCM. If you do, the MCM can be damaged.
- To prevent MCM damage, do not operate anything electrical (audio system, brakes, A/C, power windows, door locks, etc.) during the update.
- If you need to diagnose the Honda interface module (HIM) because the HIM's red (#3) light came on or was flashing during the update, leave the ignition switch in ON (II) when you disconnect the HIM from the data link connector (DLC). This will prevent MCM damage.

(cont'd)

MCM Update (cont'd)

1. Turn the ignition switch to ON (II). Do not start the engine.

2. Connect the HDS or the Honda Interface Module (HIM) to the data link connector (DLC) (A) located under the driver's side of dashboard.

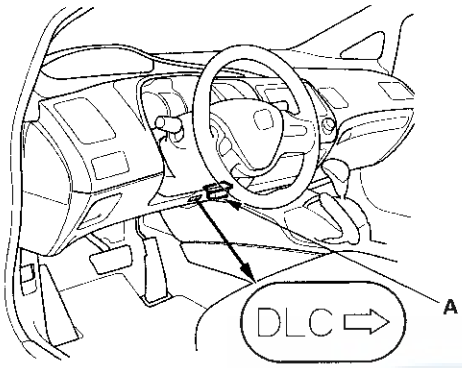

3. Make sure the HDS communicates with the vehicle, the BCM module, and the MCM. If it doesn't, troubleshooting the DLC circuit (see page 11-213).

4. Do the MCM update procedure as described on the HIM label and in the CM update system.

MCM Replacement

NOTE: Put on gloves to protect your hands from electrical shock.

IMA components are located in this area. The IMA is a high-voltage system. You must be familiar with the IMA system before working on or around it. Make sure you have read the IMA service precautions before doing repairs or service (see page 12-3).

1. Remove the PCU assembly (see page 12-183).

2. Remove the cover (A), the busplate (B), and the MCM (C).

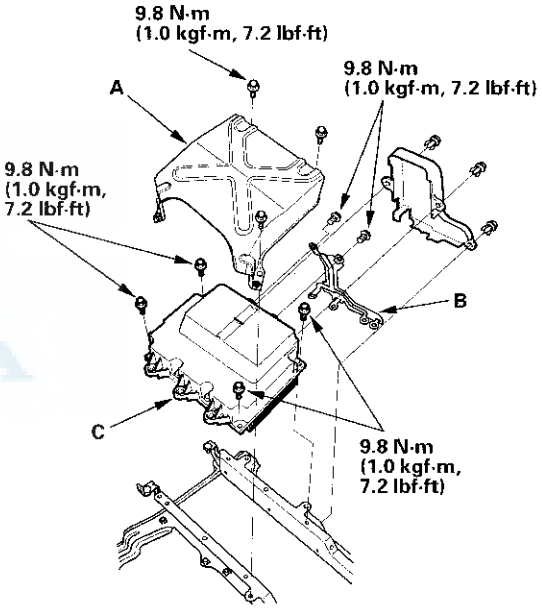

3. Install the parts in the reverse order of removal.

4. Do the motor rotor position calibration (see page 12-6).

Battery Module Removal/Installation

NOTE: Put on gloves to protect your hands from electrical shock.

IMA components are located in this area. The IMA is a high-voltage system. You must be familiar with the IMA system before working on or around it. Make sure you have read the IMA service precautions before doing repairs or service (see page 12-3).

1. Make sure the ignition switch is in LOCK (0).
2. Do the battery terminal disconnection procedure (see page 22-62).
3. Remove the IPU lid (see page 12-180).
4. Remove the high voltage cables (A), then wrap them with insulating tape (B).

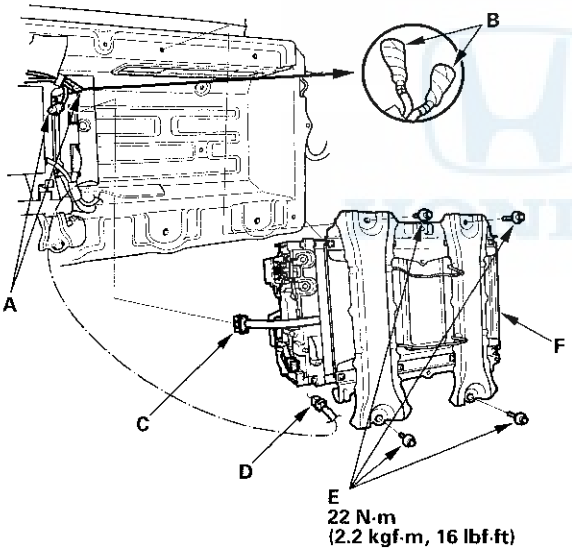

5. Disconnect the BCM module connector (C) and the junction board connector (D).
6. Remove the bolts (E), then remove the battery module (F).
7. Install the parts in the reverse order of removal.
8. Do the battery terminal reconnection procedure (see page 22-62).

   NOTE: If the IMA battery level gauge (BAT) displays no segments, start the engine, and hold it between 3,500 rpm and 4,000 rpm without load (in P or N) until the BAT displays at least three segments.

IPU Module Fan Replacement

NOTE: Put on gloves to protect your hands from electrical shock.

IMA components are located in this area. The IMA is a high-voltage system. You must be familiar with the IMA system before working on or around it. Make sure you have read the IMA service precautions before doing repairs or service (see page 12-3).

1. Remove the PCU assembly (see page 12-183).
2. Remove the IPU module fan (A).

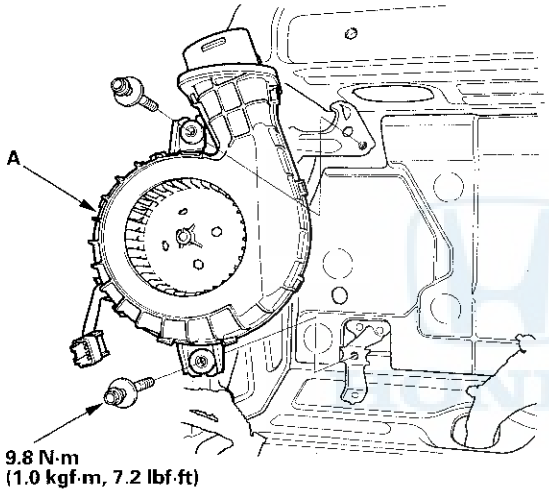

3. Install the parts in the reverse order of removal.

IPU Module Air Duct Removal/ Installation

1. Remove the spare tire lid and the trunk front trim panel (see page 20-68).
2. Remove the IPU module air outlet duct (A) and the IPU module air inlet duct (B).

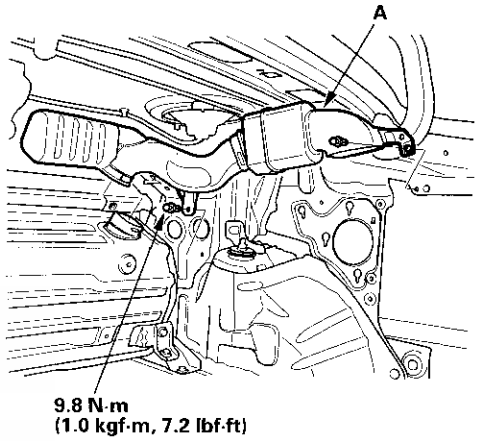

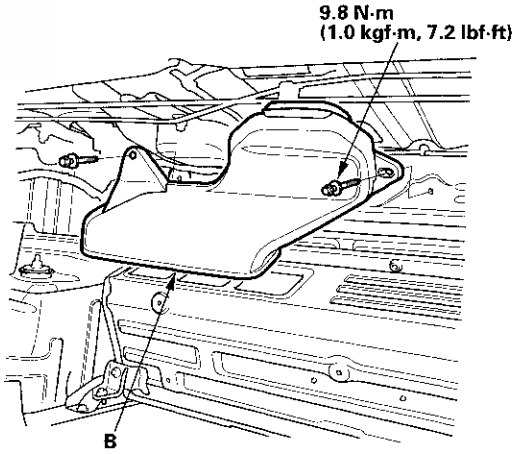

3. Install the parts in the reverse order of removal.

IPU Case Removal/Installation

NOTE: Put on gloves to protect your hands from electrical shock.

IMA components are located in this area. The IMA is a high-voltage system. You must be familiar with the IMA system before working on or around it. Make sure you have read the IMA service precautions before doing repairs or service (see page 12-3).

1. Remove the PCU assembly (see page 12-183).
2. Remove the IPU module fan (see page 12-188).
3. Remove the IPU module air duct (see page 12-188).
4. Remove the battery module (see page 12-187).
5. Remove the brackets (A).

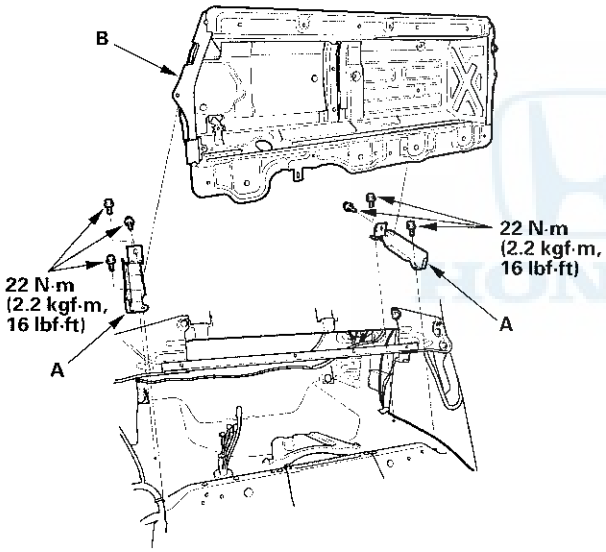

6. Remove the IPU case (B).
7. Install the parts in the reverse order of removal.

Motor Power Cable Removal/ Installation

NOTE: Put on gloves to protect your hands from electrical shock.

IMA components are located in this area. The IMA is a high-voltage system. You must be familiar with the IMA system before working on or around it. Make sure you have read the IMA service precautions before doing repairs or service (see page 12-3).

1. Make sure the ignition switch in LOCK (0).
2. Do the battery terminal disconnection procedure (see page 22-62).
3. Remove the IPU lid (see page 12-180).
4. Disconnect the A/C compressor power cable connector (A) from the A/C compressor driver, then wrap the cable end with insulating tape.

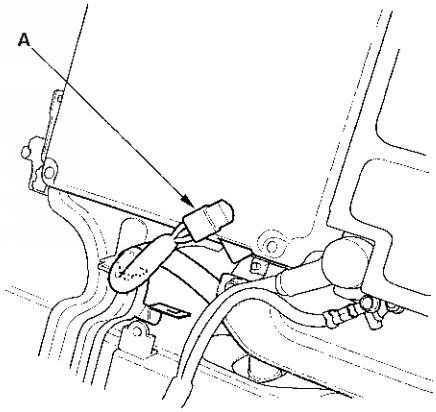

5. Remove the wires (A) from the DC-DC converter.

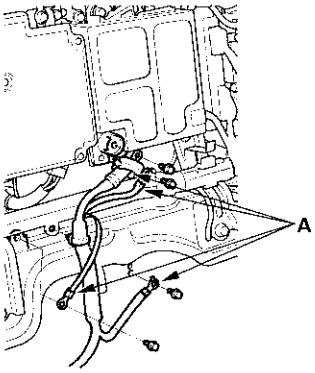

(cont'd)

Motor Power Cable Removal/Installation (cont'd)

6. Lift the IPU wire harness (A).

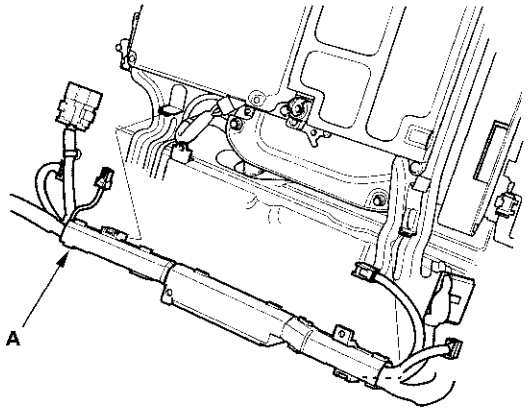

7. Remove the PCU cover (A).

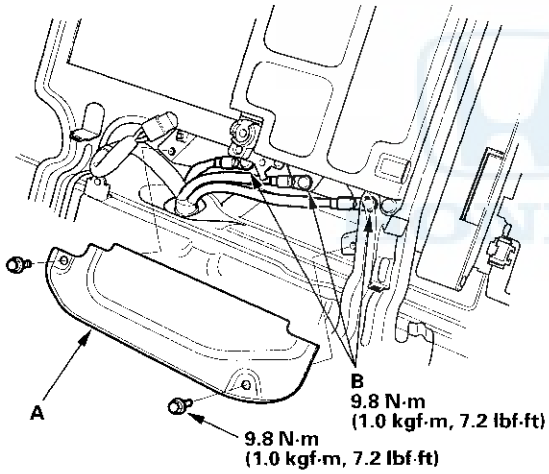

8. Remove the motor power cables (B) and wrap them with insulating tape.
   Note the position of the U phase, V phase, and W phase cables before you disconnect them.

9. Remove the air cleaner assembly (see page 11-370).

10. Disconnect the motor power cable connector (A) from the motor stator (B).

    NOTE:
    - Refer to Disconnecting the motor power cable connector from the motor stator (see page 12-3).
    - If the motor power cable terminals are wet, dry them with a clean towel. Do not use compressed air.

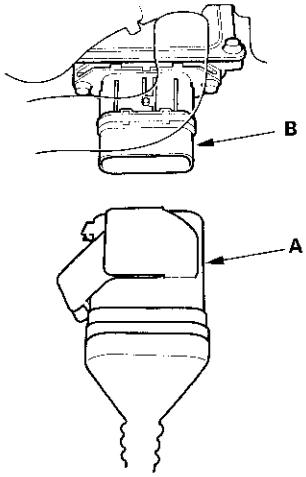

11. Remove the wire (A) from the under-hood fuse/relay box, then remove the clamp (B).

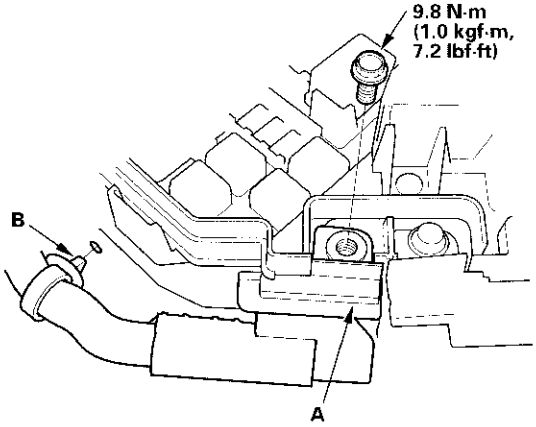

12. Remove the cowl cover and the under-cowl panel (see page 20-140).

13. Remove the cover (A), and disconnect the A/C compressor power cable connector (B).

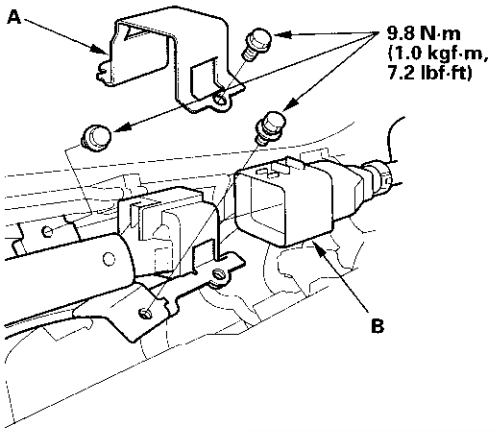

14. Remove the motor power cable (A) from the stays (B).

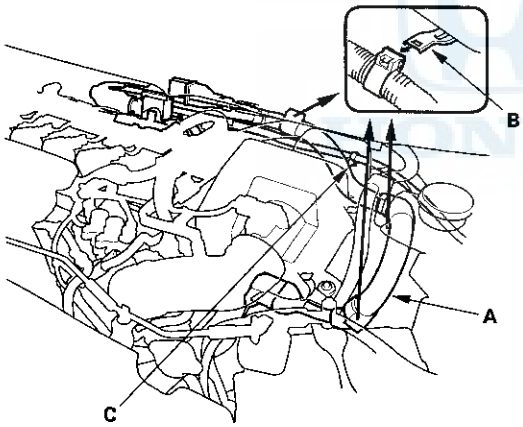

15. Remove the wire harness clamp (C).

16. Remove the bolts (A) and the cover (B).

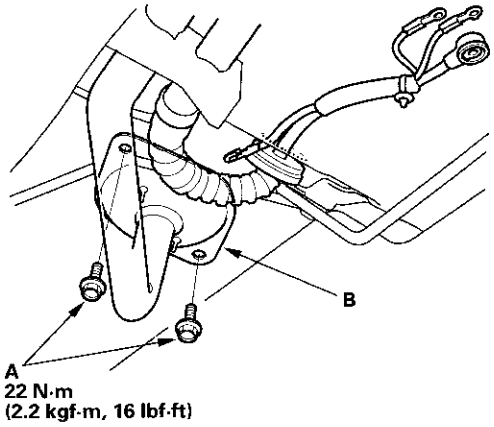

17. Remove the right middle undercover (A), then remove the clamps (B).

NOTE: Do not reuse the clamps. Replace them with new ones.

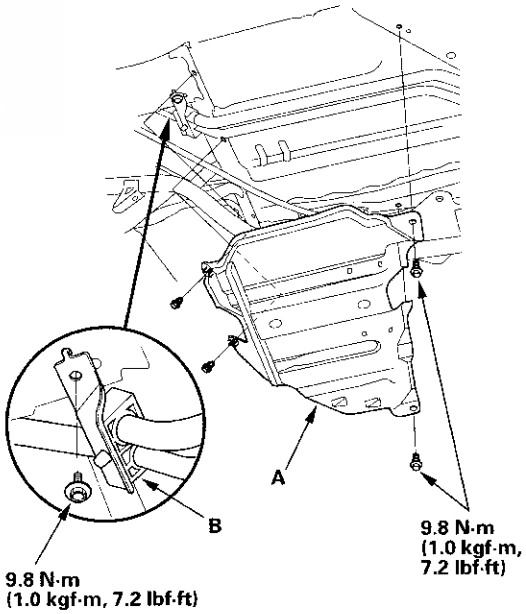

(cont'd)

Motor Power Cable Removal/ Installation (cont'd)

18. Remove the clamps (A) from the floor.

    NOTE: Do not reuse the clamps. Replace them with new once.

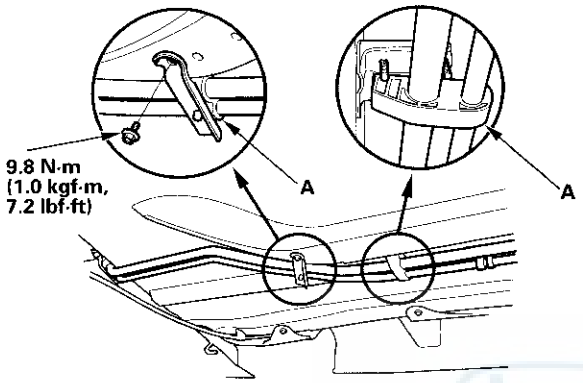

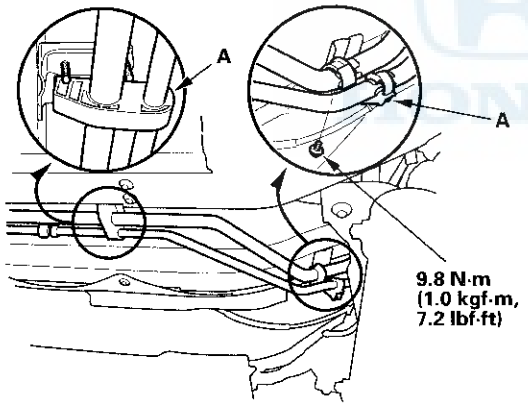

19. Install the parts in the reverse order of removal.

20. Do the battery terminal reconnection procedure (see page 22-62).

    NOTE: If the IMA battery level gauge (BAT) displays no segments, start the engine, and hold it between 3,500 rpm and 4,000 rpm without load (in P or N) until the BAT displays at least three segments.

IMA Motor Rotor Removal/ Installation

Special Tools Required
Rotor puller 07YAC-PHM010B

The motor rotor contains very strong magnets and should be handled with special care. People with pacemakers or other sensitive medical devices should not handle the motor rotor.

⚠ WARNING

If the motor rotor is installed by hand, it may suddenly be pulled toward the motor stator with great force, causing serious hand or finger injury. Always use the special tool to remove or install a motor rotor.
- Keep the motor rotor away from magnetically sensitive devices.
- Do not blow air near the rotor, as metal particles may get on the magnet.
- Store the rotor in the designated storage box and keep it away from sensitive devices during storage.

1. Remove the transmission (see page 14-178).

2. Remove the support (A).

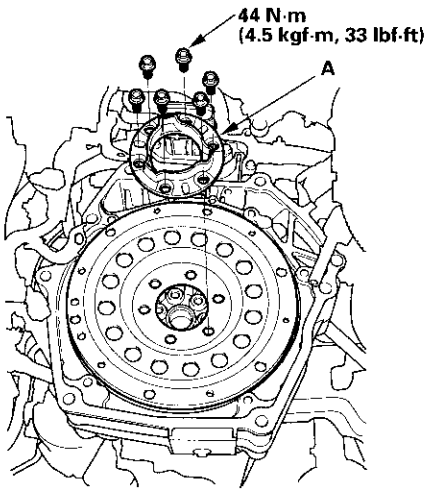

3. Remove the sensor plate (A).

   NOTE: When installing the sensor plate, check its insulating paint for damage.

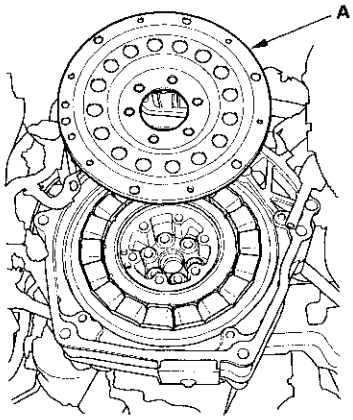

4. Remove the motor power cable (A) from the motor stator by pushing the tab (B), raising the lever (C), and sliding the protector (D) in the direction shown.

   NOTE:
   - If the motor power cable connector is dirty, clean it before removal.
   - Cover the disconnected connector (E) with plastic (F), and wrap the motor power cable terminal with tape (G).
   - If the motor power cable is wet, wait until it is dry before you wrap it.

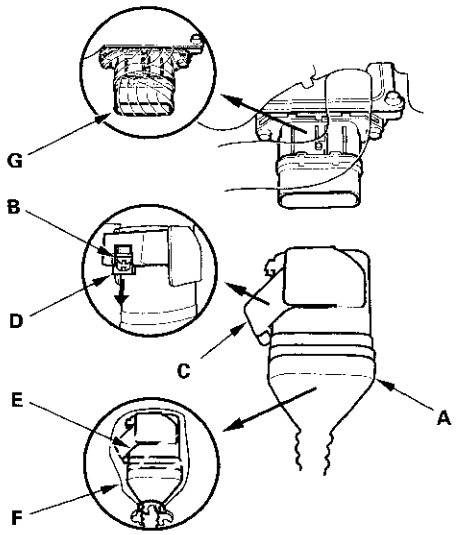

5. Slide a plastic film (A) between the motor rotor (B) and the motor stator (C).

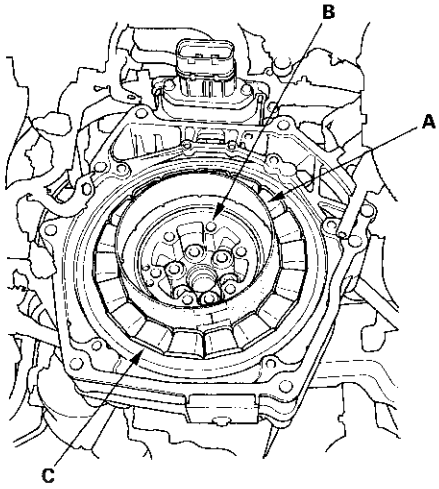

6. Remove three of the six bolts (A) as shown.

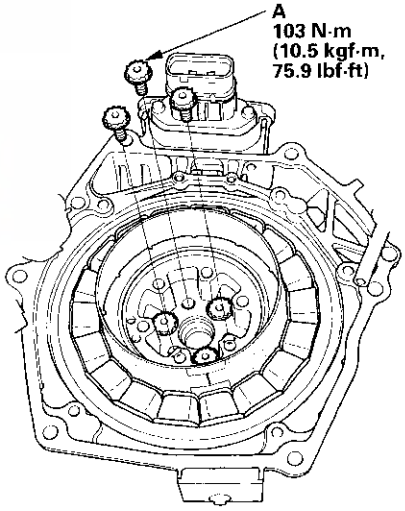

(cont'd)

IMA Motor Rotor Removal/Installation (cont'd)

7. Install the rotor puller guide pins, then remove the remaining three bolts (A), and remove the rotor spacer (B).

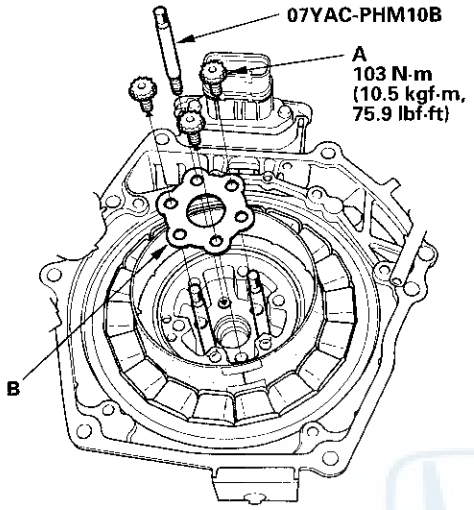

8. Attach the rotor puller with its supplied bolts.

   NOTE: When installing the rotor puller, position the puller to fit over the dowel pins (A).

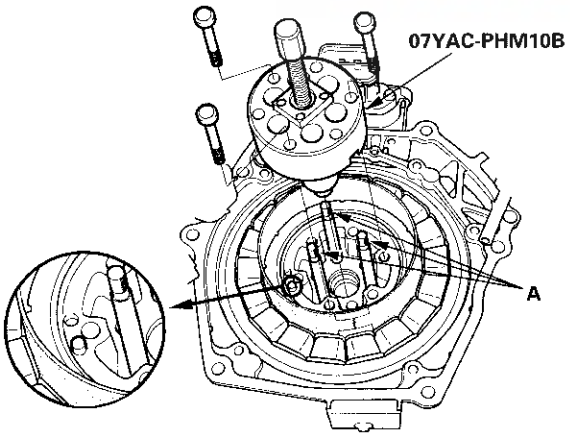

9. Remove the motor rotor (A).

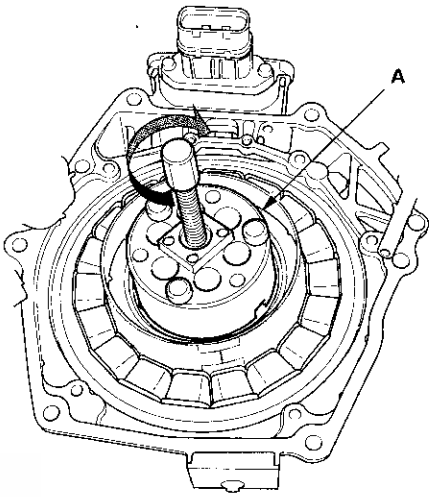

10. To prevent damage to the rotor magnet while working on the stator, place the rotor, with puller attached, into the puller case.

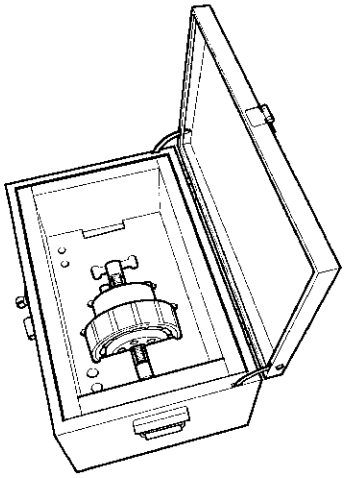

11. Install the parts in the reverse order of removal.

    NOTE: Turn the handle of the rotor puller slowly when inserting the rotor into the stator. The rotor is drawn into the stator by magnetic force.

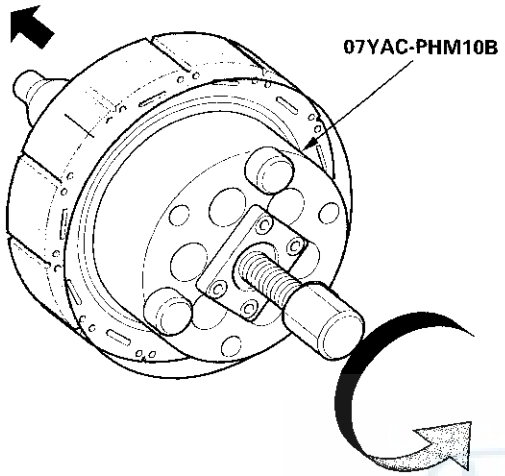

12. Remove the plastic film.
13. Reconnect the motor power cable to the motor stator.
14. Reinstall the sensor plate.
15. Reinstall the support.
16. Install the transmission (see page 14-187).
17. Do the motor rotor position calibration (see page 12-6).

Motor Housing Removal/ Installation

1. Remove the IMA motor rotor (see page 12-192).
2. Remove the connectors (A) and the stays (B).

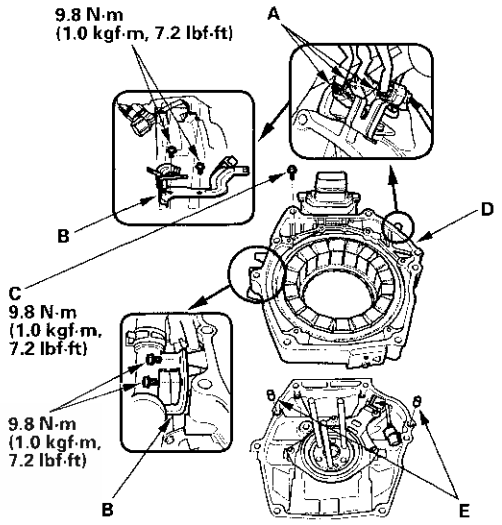

3. Remove the bolt (C) and the motor housing (D).

   NOTE: Set the dowel pins (E) in the motor housing before installing the motor stator on the engine.

4. Remove the shielded male connector (see page 12-196).
5. Remove the terminal housing (A), and the stator (B).

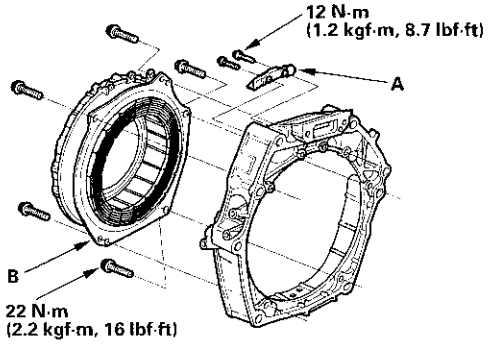

6. Install the parts in the reverse order of removal.
7. Install the IMA motor rotor (see page 12-192).
8. Do the motor rotor position calibration procedure (see page 12-6).

Motor Housing Disassembly/ Reassembly

1. Remove the IMA motor housing (see page 12-195).
2. Remove the terminal cover (A), and the shielded male connector (B).

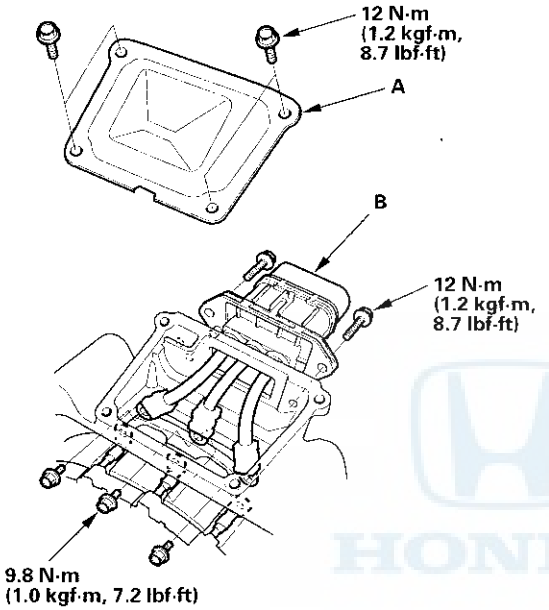

3. Install the parts in the reverse order of removal.
4. Install the IMA motor rotor (see page 12-192).
5. Do the motor rotor position calibration procedure (see page 12-6).

Motor Rotor Position Sensor Removal/Installation

1. Remove the IMA motor housing (see page 12-195).
2. Remove the bolts, and the motor rotor position sensor (A).

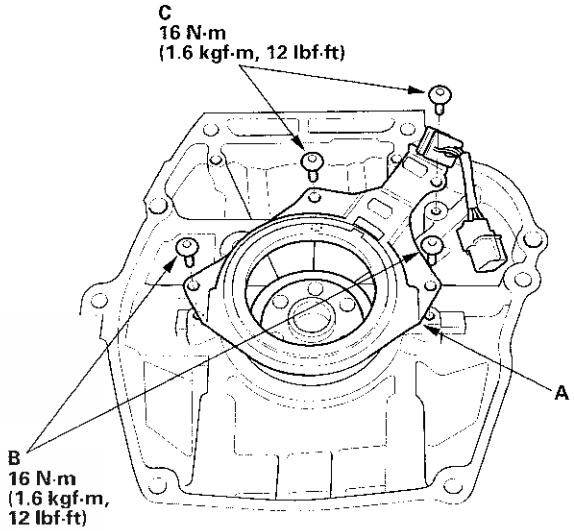

3. Install the parts in the reverse order of removal.

   NOTE: Tighten the bolts (B) first, then tighten the bolts (C).

4. Do the motor rotor position calibration procedure (see page 12-6).

Transaxle

Continuously Variable Transmission (CVT) ... 14-1

Driveline/Axle 16-1

SUPPLEMENTAL RESTRAINT SYSTEM (SRS) (If CVT maintenance is required)

The Civic Hybrid SRS includes a driver's airbag in the steering wheel hub, a passenger's airbag in the dashboard above the glove box, seat belt tensioners in the front seat belt retractors, seat belt buckle tensioners in the front seat belt buckles, side curtain airbags in the sides of the roof, and side airbags in the front seat-backs. Information necessary to safely service the SRS is included in this Service Manual. Items marked with an asterisk (*) on the contents page include or are located near SRS components. Servicing, disassembling, or replacing these items requires special precautions and tools, and should be done by an authorized Honda dealer.

- To avoid rendering the SRS inoperative, which could lead to personal injury or death in the event of a severe frontal or side collision, all SRS service work should be done by an authorized Honda dealer.
- Improper service procedures, including incorrect removal and installation of the SRS, could lead to personal injury caused by unintentional deployment of the airbags, side airbags, and/or side curtain airbags.
- Do not bump or impact the SRS unit, front impact sensors, side impact sensors, or rear safing sensor when the ignition switch is in ON (II), or for at least 3 minutes after the ignition switch is turned to LOCK (0); otherwise, the system may fail in a collision, or the airbags may deploy.
- SRS electrical connectors are identified by yellow color coding. Related components are located in the steering column, front console, dashboard, dashboard lower panel, in the dashboard above the glove box, in the front seats, in the roof side, and around the floor. Do not use electrical test equipment on these circuits.

INTEGRATED MOTOR ASSIST (IMA) SYSTEM (If CVT maintenance is required)

IMA components are located in this area. The IMA is a high-voltage system. The high voltage cables and their covers are identified by orange coloring. The safety labels are attached to high voltage and other related parts (see page 1-7). You must be familiar with the IMA system before working around it. Make sure you have read the Service Precautions in the IMA section before performing repairs or service (see page 12-3).

Continuously Variable Transmission (CVT)

CVT

Special Tools 14-2
General Troubleshooting Information 14-3
DTC Troubleshooting Index 14-7
Symptom Troubleshooting Index 14-10
Component Location Index 14-28
System Description 14-29
DTC Troubleshooting 14-67
Road Test 14-159
Stall Speed Test 14-161
Pressure Test 14-162
CVT Start Clutch Pressure Control Valve Solenoid Test 14-165
CVT Drive Pulley Pressure Control Valve Solenoid Test 14-166
CVT Driven Pulley Pressure Control Valve Solenoid Test 14-166
Inhibitor Solenoid Test 14-167
Lower Valve Body Removal and Installation 14-167
CVT Start Clutch Pressure Control Valve Replacement 14-168
CVT Drive Pulley Pressure Control Valve Replacement 14-169
CVT Driven Pulley Pressure Control Valve Replacement 14-169
Inhibitor Solenoid Replacement 14-170
CVT Input Shaft (Drive Pulley) Speed Sensor Replacement 14-170
CVT Output Shaft (Driven Pulley) Speed Sensor Replacement 14-171
CVT Speed Sensor Replacement 14-171
CVT Speed Sensor (Secondary) Replacement 14-172
Start Clutch Pressure Control Calibration Procedures 14-172
Start Clutch Check 14-174
CVT Fluid Level Check 14-175
CVT Fluid Replacement 14-176
Transmission Removal 14-178
Drive Plate Removal and Installation 14-186
Transmission Installation 14-187
ATF Cooler Cleaning 14-196
ATF Cooler Hose Replacement 14-199
ATF Filter Replacement 14-200
Shift Lever Removal 14-200
Shift Lever Installation 14-201
Shift Lever Disassembly/Reassembly 14-202
Shift Cable Replacement 14-203
Shift Cable Adjustment 14-205
Transmission Disassembly 14-227
Transmission Reassembly 14-251

A/T Gear Position Indicator

Component Location Index 14-209
Circuit Diagram 14-210
Transmission Range Switch Test 14-211
Transmission Range Switch Replacement 14-212
A/T Gear Position Indicator Panel Light Harness/Park Pin Switch Replacement 14-214

A/T Interlock System

Component Location Index 14-215
Circuit Diagram 14-216
Shift Lock System Circuit Troubleshooting 14-217
* Key Interlock System Circuit Troubleshooting 14-222
Shift Lock Solenoid Test 14-223
Shift Lock Solenoid Replacement 14-224
Shift Lock Stop Replacement 14-225
Shift Lock Stop Cushion Replacement 14-225
Park Pin Switch Test 14-226

Lower Valve Body

CVT Start Clutch Pressure Control Valve Removal/Installation 14-233
CVT Drive Pulley Pressure Control Valve Removal/Installation 14-233
CVT Driven Pulley Pressure Control Valve Removal/Installation 14-234
Inhibitor Solenoid Removal/Installation ... 14-234

Flywheel Housing

Final Drive Shaft Bearing Replacement 14-235
Input Shaft Oil Seal Replacement 14-235

End Cover

ATF Feed Pipe Replacement 14-236

Intermediate Housing

Manual Valve Body Disassembly, Inspection, and Reassembly 14-237

Transmission Housing

ATF Pump Replacement 14-238
Driven Pulley Shaft Bearing Removal and Installation 14-239
Final Drive Shaft Bearing Removal and Installation 14-239
Selector Control Shaft Removal and Installation 14-240

Input Shaft

Planetary Carrier Clearance Inspection 14-241

Forward Clutch

Clutch Disassembly 14-242
Clutch Reassembly 14-244

Final Drive Shaft

Thrust Clearance Inspection 14-249

CVT Differential

Component Location Index 14-263
Backlash Inspection 14-263
Differential Carrier and Final Driven Gear Replacement 14-264
Carrier Bearing Replacement 14-264
Oil Seal Replacement 14-265
Carrier Bearing Side Clearance Inspection 14-266

Special Tools

Ref. No.	Tool Number	Description	Qty
①	07AAJ-PLYA100	A/T High Pressure Gauge	2
②	07AAK-SNAA120	Universal Eyelet	1
③	07JAD-PN00100	Oil Seal Driver Attachment, 64 x 72 mm	1
④	07JAD-PH80101	Driver Attachment, 58 mm	1
⑤	07LAE-PX40000	Clutch Spring Compressor Set	1
⑥	07MAJ-PY4011A	A/T Pressure Hose, 2,210 mm	5
⑦	07MAJ-PY40120	A/T Pressure Hose Adapter	5
⑧	07NAD-PX40100	Driver Attachment, 78 x 80 mm	1
⑨	07TAE-P4V0110	Reverse Brake Spring Compressor	1
⑩	07TAE-P4V0120	Start Clutch Remover	1
⑪	07TAE-P4V0130	Start Clutch Installer	1
⑫	07ZAE-PRP0100	Clutch Compressor Attachment	1
⑬	07406-0020401	A/T Oil Pressure Gauge Set	1
⑭	07406-0070301	A/T Low Pressure Gauge	1
⑮	07736-A01000B or 07736-A01000A	Adjustable Bearing Puller, 20—40 mm	1
⑯	07746-0010200	Driver Attachment, 37 x 42 mm	1
⑰	07746-0010500	Attachment, 62 x 68 mm	1
⑱	07746-0010600	Attachment, 72 x 75 mm	1
⑲	07746-0030100	Driver Handle, 40 mm I.D.	1
⑳	07749-0010000	Driver Handle 15 x 135L	1

⑮: Must be used with a commercially available 3/8 "-16 UNF slide hammer.

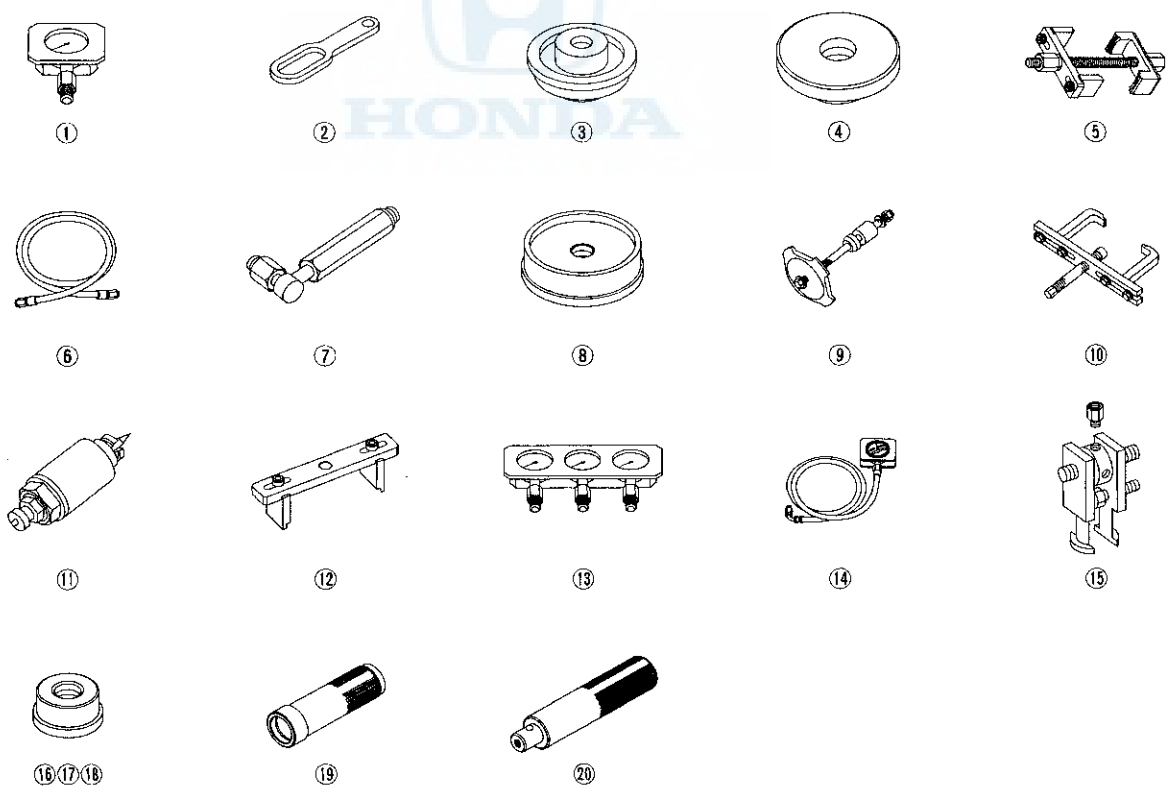

General Troubleshooting Information

How to Check for DTCs with the Honda Diagnostic System (HDS)

When the powertrain control module (PCM) senses an abnormality in the input or output system, the D indicator (A) in the gauge control module (tach) (B) will usually blink.

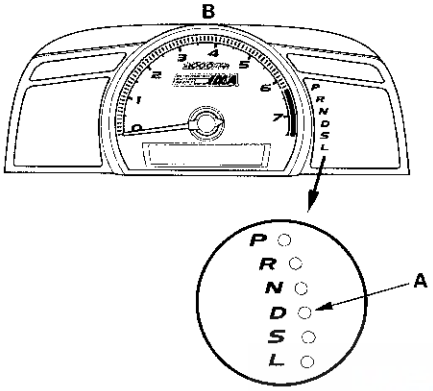

When the Honda diagnostic system (HDS) is connected to the data link connector (DLC) (A) located under the driver's side of the dashboard and the SCS mode is selected, it will indicate the diagnostic trouble code (DTC) when the ignition switch is turned to ON (II) and the appropriate menu is selected.

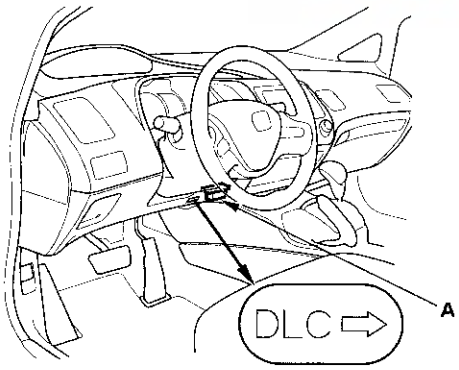

If the D indicator or the malfunction indicator lamp (MIL) has been reported on, or if a driveability problem is suspected, follow this procedure:

1. Connect the HDS to the DLC. (See the HDS user's manual for specific instructions.)
2. Turn the ignition switch to ON (II), select the A/T system, and observe the DTC in the DTCs MENU on the HDS screen.
3. Make sure the HDS communicates with the PCM. If it does not, go to the DLC circuit troubleshooting (see page 11-213).
4. Record the freeze data and on-board snapshot for all fuel and emissions DTCs and A/T DTCs.
5. If there is a fuel and emissions DTC, first check the fuel and emissions system as indicated by the DTC.
6. Clear the DTC(s) and the data.
7. Drive the vehicle for several minutes under the same conditions as those indicated by the freeze data, and then recheck for a DTC. If the A/T DTC returns, go to the indicated DTC's troubleshooting. If the DTC does not return, there was an intermittent problem within the circuit. Make sure all pins and terminals in the circuit are tight.

Symptom Troubleshooting Versus DTC Troubleshooting

Some symptoms will not trigger the diagnostic trouble codes (DTCs) or cause the D indicator to blink. If the MIL was reported on or the D indicator has been blinking, check for the DTCs. If the vehicle has an abnormal symptom, and there are no DTCs stored, do the symptom troubleshooting. Check the list of probable cause(s) for the symptom, in the sequence listed, until you find the problem.

(cont'd)

General Troubleshooting Information (cont'd)

How to Check for DTCs with the SCS Mode (retrieving the flash codes)

NOTE: The preferred method is to use the HDS to retrieve the DTCs.

When the PCM senses an abnormality in the input or output system, the D indicator (A) in the gauge control module (tach) (B) will usually blink.

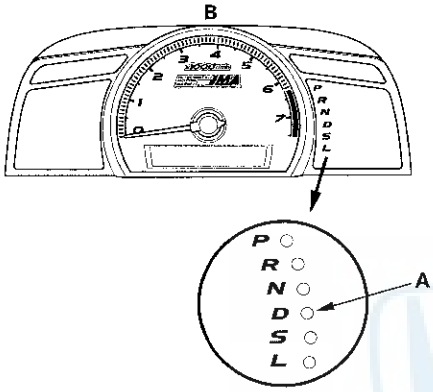

When the D indicator has been reported on, connect the HDS to the DLC (A) located under the driver's side of the dashboard. Turn the ignition switch to ON (II), select the SCS mode, then the D indicator will indicate (blink) the DTC.

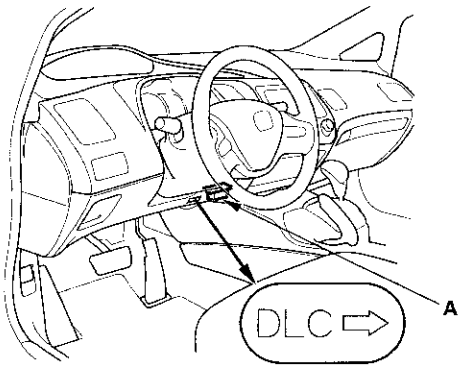

If the D indicator and the MIL come on at the same time, or if a driveability problem is suspected, follow this procedure:

1. Connect the HDS to the DLC. (See the HDS user's manual for specific instructions.)
2. Turn the ignition switch to ON (II).
3. Make sure the HDS communicates with the PCM. If it does not, go to the DLC circuit troubleshooting (see page 11-213).
4. Select the SCS mode, then observe the D indicator in the gauge control module (tach).
   Codes 1 through 9 are indicated by individual short blinks. Codes 10 and above are indicated by a series of long and short blinks. One long blink equals 10 short blinks. Add the long and short blinks together to determine the code.

Example: DTC P0705 (5)

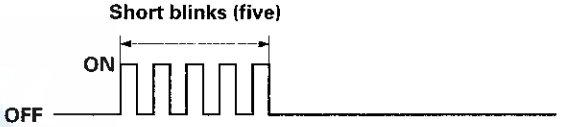

Example: DTC P0717 (15)

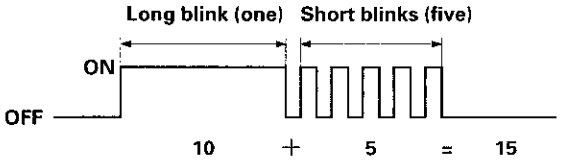

5. Record all fuel and emissions DTCs and A/T DTCs.
6. If there is a fuel and emissions DTC, first check the fuel and emissions system as indicated by the DTC.
7. Clear the DTC(s) and the data.
8. Drive the vehicle for several minutes under the same conditions as those indicated by the freeze data, and then recheck for DTCs. If the A/T DTC returns, go to the indicated DTC's troubleshooting. If the DTC does not return, there was an intermittent problem within the circuit. Make sure all pins and terminals in the circuit are tight.

How to Troubleshoot Circuits at the PCM Connectors

NOTE: The PCM overwrites data and monitors the EVAP system for about 30 minutes after the ignition switch is turned to LOCK (0). Jumping the SCS line after turning the ignition switch to LOCK (0) cancels this function. Disconnecting the PCM during this function, without jumping the SCS line first, can damage the PCM.

1. Jump the SCS line with the HDS.

2. Remove the cover (A).

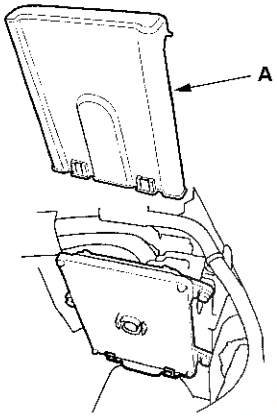

3. Lift up the under-hood fuse/relay box (D).

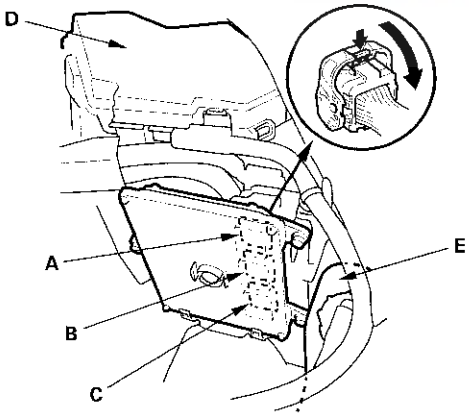

4. Remove the coolant reservoir (E). Disconnect PCM connectors A, B, and C.

   NOTE: PCM connectors A, B, and C have symbols (A=□, B=△, C=○) embossed on them for identification.

5. When diagnosis/troubleshooting is done at the PCM connector, use the terminal test port (A) above the terminal you need to check.

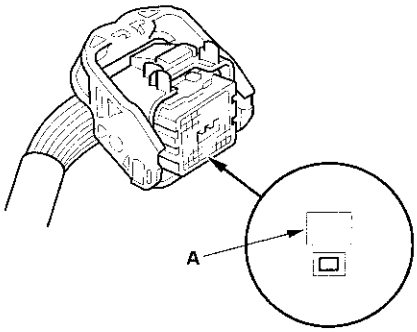

6. Connect one side of the patch cord (A) terminals to a commercially available digital multimeter (B), and connect the other side of the patch cord terminals to a commercially available banana jack (Pomona Electronics Tool No. 3563 or equivalent) (C).

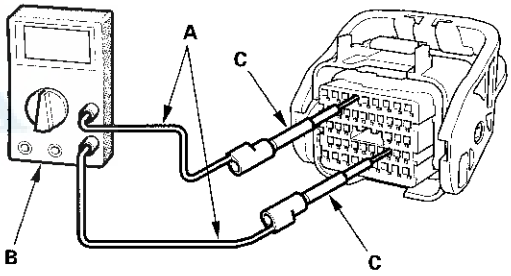

7. Gently insert the pin probe (male) into the terminal test port from the terminal side. Do not force the tips into the terminals.

NOTICE

- For accurate results, always use the pin probe (male).
- To prevent damage to the connector terminals, do not insert test equipment probes, paper clips, or other substitutes as they can damage the terminals. Damaged terminals cause a poor connection, and an incorrect measurement.
- Do not puncture the insulation on a wire. Punctures can cause poor or intermittent electrical connections.

(cont'd)

General Troubleshooting Information (cont'd)

Clear A/T DTCs Procedure

1. Connect the HDS to the DLC (A) located under the driver's side of the dashboard.

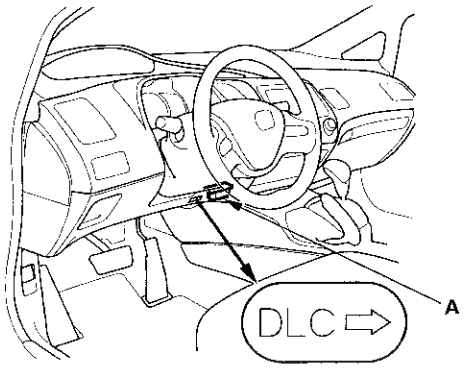

2. Turn the ignition switch to ON (II).
3. Make sure the HDS communicates with the PCM. If it does not, go to the DLC circuit troubleshooting (see page 11-213).
4. Clear the DTC(s) on the HDS screen.

OBD Status

The OBD status shows the current system status of each DTC and all of the parameters. This function is used to see if the technician's repair was successfully completed. The results of diagnostic tests for the DTC are displayed as:

- PASSED: The on-board diagnosis is successfully completed.
- FAILED: The on-board diagnosis has completed but failed.
- NOT COMPLETED: The on-board diagnosis was running but is out of the enable conditions of the DTC.

How to End a Troubleshooting Session (required after any troubleshooting)

NOTE: Reset the PCM with the HDS while the engine is stopped.

1. Turn the ignition switch to LOCK (0).
2. Turn the ignition switch to ON (II), and wait for 30 seconds.
3. Turn the ignition switch to LOCK (0), and disconnect the HDS from the DLC.
4. Do the PCM idle learn procedure (see page 11-333).
5. Start the engine with the shift lever in P or N, and warm it up to normal operating temperature (the radiator fan comes on).
6. To verify that the problem is repaired, test-drive the vehicle for several minutes at speeds over 31 mph (50 km/h) or under the same conditions as those indicated by the freeze data.

Failure Reproduction Technique

Make sure to follow these points while the vehicle is raised on a lift for the test-drive.

- Disable the VSA (if equipped) by pressing the VSA OFF switch.
- ABS or VSA DTC(s) may come on when test-driving on a lift. If the ABS or VSA DTC(s) come on, clear the DTC(s) with the HDS.

DTC Troubleshooting Index

NOTE: Before you troubleshoot, record all freeze data and any on-board snapshot with the HDS, and review General Troubleshooting Information (see page 14-3).

DTC * (1)	Two Drive Cycle Detection	D Indicator	MIL	Detection Item	Page
P0107 (12)	———	Blinks	ON	Manifold Absolute Pressure (MAP) Sensor Circuit Low Voltage	(see page 14-67)
P0108 (12)	———	Blinks	ON	Manifold Absolute Pressure (MAP) Sensor Circuit High Voltage	(see page 14-67)
P0335 (88)	———	Blinks	ON	Crankshaft Position (CKP) Sensor No Signal	(see page 14-68)
P0336 (88)	———	Blinks	ON	Range/Performance Problem in Crankshaft Position (CKP) Sensor Circuit	(see page 14-69)
P0501 (36) * (2), * (3)	———	Blinks	ON	Range/Performance Problem in CVT Speed Sensor Circuit	(see page 14-70)
P0501 (36) * (2), * (4)	———	Blinks	ON	Range/Performance Problem in CVT Speed Sensor Circuit	(see page 14-75)
P0502 (36) * (2), * (3)	———	Blinks	ON	Problem in CVT Speed Sensor Circuit	(see page 14-70)
P0502 (36) * (2), * (4)	———	Blinks	ON	Problem in CVT Speed Sensor Circuit	(see page 14-76)
P0603 (0)	———	Blinks	ON	Powertrain Control Module (PCM) Internal Control Module Keep Alive Memory (KAM) Error	(see page 14-80)
P0705 (5) * (2)	———	Blinks	ON	Short in Transmission Range Switch Circuit (Multiple Shift-position Input)	(see page 14-81)
P0706 (6) * (2)	○	OFF	ON	Open in Transmission Range Switch Circuit	(see page 14-90)
P0716 (34) * (2)	———	Blinks	ON	Range/Performance Problem in CVT Input Shaft (Drive Pulley) Speed Sensor Circuit	(see page 14-93)
P0717 (34) * (2)	———	Blinks	ON	Problem in CVT Input Shaft (Drive Pulley) Speed Sensor Circuit (No Signal Input)	(see page 14-93)
P0721 (35) * (2)	———	Blinks	ON	Range/Performance Problem in CVT Output Shaft (Driven Pulley) Speed Sensor Circuit	(see page 14-99)
P0722 (35) * (2)	———	Blinks	ON	Problem in CVT Output Shaft (Driven Pulley) Speed Sensor Circuit (No Signal Input)	(see page 14-99)

NOTE:
* (1): The DTC in parentheses is the flash code the D indicator indicates when the data link connector (DLC) is connected to the HDS, and in the SCS mode.
* (2): This code is caused by an electrical circuit problem and cannot be caused by a mechanical problem in the transmission.
* (3): '06 model
* (4): '07-09 models

(cont'd)

DTC Troubleshooting Index (cont'd)

NOTE: Before you troubleshoot, record all freeze data and any on-board snapshot with the HDS, and review General Troubleshooting Information (see page 14-3).

DTC *(1)	Two Drive Cycle Detection	D Indicator	MIL	Detection Item	Page
P0746 (104)	○	Blinks	ON	CVT Drive Pulley Pressure Control Valve Stuck OFF	(see page 14-104)
P0777 (105)	○	Blinks	ON	CVT Driven Pulley Pressure Control Valve Stuck ON	(see page 14-105)
P0780 (100)	—	Blinks	ON	Problem in Hydraulic Control System	(see page 14-107)
P0796 (103) *(3)	○	Blinks	ON	CVT Start Clutch Pressure Control Valve Stuck OFF	(see page 14-108)
P0796 (103) *(4)	○	Blinks	ON	CVT Start Clutch Pressure Control Valve Stuck OFF	(see page 14-109)
P0962 (38) *(2)	—	Blinks	ON	CVT Drive Pulley Pressure Control Valve Circuit Low Voltage	(see page 14-110)
P0963 (38) *(2)	—	Blinks	ON	CVT Drive Pulley Pressure Control Valve Circuit High Voltage	(see page 14-113)
P0966 (39) *(2)	—	Blinks	ON	CVT Driven Pulley Pressure Control Valve Circuit Low Voltage	(see page 14-116)
P0967 (39) *(2)	—	Blinks	ON	CVT Driven Pulley Pressure Control Valve Circuit High Voltage	(see page 14-119)
P0970 (32) *(2)	—	Blinks	ON	CVT Start Clutch Pressure Control Valve Circuit Low Voltage	(see page 14-123)
P0971 (32) *(2)	—	Blinks	ON	CVT Start Clutch Pressure Control Valve Circuit High Voltage	(see page 14-126)
P16C0 (99)	—	OFF	ON	Powertrain Control Module (PCM) CVT Control System Incomplete Update	(see page 14-129)
P16D7 (107)	—	Blinks	OFF	Powertrain Control Module (PCM) Internal F-CAN Communication Circuit Malfunction	(see page 14-130)
P16D8 (120)	—	Blinks	ON	Powertrain Control Module (PCM) Internal IMA CAN Communication Circuit Malfunction	(see page 14-130)
P1860 (33) *(2)	—	Blinks	OFF	Inhibitor Solenoid Circuit Low Voltage	(see page 14-131)
P1861 (33) *(2)	—	Blinks	OFF	Inhibitor Solenoid Circuit High Voltage	(see page 14-134)
P1890 (42)	—	Blinks	OFF	Problem in CVT Speed Control System	(see page 14-137)
P1891 (43) *(3)	—	Blinks	OFF	Problem in Start Clutch Control System	(see page 14-138)
P1891 (43) *(4)	—	Blinks	OFF	Problem in Start Clutch Control System	(see page 14-140)
P1898 (100)	○	Blinks	ON	CVT Drive Pulley Pressure Control Valve Stuck ON or CVT Driven Pulley Pressure Control Valve Stuck OFF	(see page 14-142)

DTC * (1)	Two Drive Cycle Detection	D Indicator	MIL	Detection Item	Page
P1899 (100)	○	Blinks	ON	CVT Drive Pulley Pressure Control Valve Stuck OFF or CVT Driven Pulley Pressure Control Valve Stuck ON	(see page 14-144)
P2122 (20)	———	Blinks	ON	Accelerator Pedal Position (APP) Sensor A (Throttle Position (TP) Sensor D) Circuit Low Voltage Input	(see page 14-145)
P2123 (20)	———	Blinks	ON	Accelerator Pedal Position (APP) Sensor A (Throttle Position (TP) Sensor D) Circuit High Voltage Input	(see page 14-145)
P2159 (93) * (3)	———	Blinks	ON	Range/Performance Problem in CVT Speed Sensor (Secondary) Circuit	(see page 14-146)
P2160 (93) * (3)	———	Blinks	ON	Problem in CVT Speed Sensor (Secondary) Circuit (No Signal Input)	(see page 14-146)
U0028 (107)	———	Blinks	OFF or ON * (5)	F-CAN Malfunction (BUS-OFF)	(see page 14-151)
U0037 (120)	———	Blinks	ON	IMA-CAN Malfunction (BUS-OFF)	(see page 14-152)
U0121 (107) * (6)	———	Blinks	OFF	F-CAN Malfunction (Powertrain Control Module (PCM)-ABS)	(see page 14-153)
U0122 (107) * (7)	———	Blinks	OFF	F-CAN Malfunction (Powertrain Control Module (PCM)-VSA)	(see page 14-154)
U0129 (107)	———	Blinks	OFF	F-CAN Malfunction (Powertrain Control Module (PCM)-Servo Unit)	(see page 14-155)
U0155 (107) * (5)	———	Blinks	OFF or ON * (5)	F-CAN Malfunction (Powertrain Control Module (PCM)-Gauge Control Module)	(see page 14-156)
U1205 (120)	———	Blinks	ON	IMA-CAN Malfunction (Powertrain Control Module (PCM)-Motor Control Module (MCM))	(see page 14-157)
U1206 (120)	———	Blinks	ON	IMA-CAN Malfunction (Powertrain Control Module (PCM)-Battery Condition Monitor (BCM) Module)	(see page 14-158)

NOTE:
* (1): The DTC in parentheses is the flash code the D indicator indicates when the data link connector (DLC) is connected to the HDS, and in the SCS mode.
* (2): This code is caused by an electrical circuit problem and cannot be caused by a mechanical problem in the transmission.
* (3): '06 model
* (4): '07-08 models
* (5): The MIL comes on when the PGM-FI system detects the same failure.
* (6): ABS model
* (7): VSA model

Symptom Troubleshooting Index

Symptom	Probable cause(s)	Notes
When you turn the ignition switch to ON (II), the D indicator comes on and stays on in all shift lever positions, or it never comes on at all	• F-CAN communication line error • Gauge control module defective • PCM defective	• Check the F-CAN communication line for a DTC (see page 22-243). • Check the A/T gear position indicator drive circuit in the gauge control module (tach) by using the gauge control module self-diagnostic function (see page 22-224).
A/T gear position indicator does not come on while the shift lever is in that position	• F-CAN communication line error • Gauge control module defective • PCM defective • Transmission range switch defective • Shift cable broken or out of adjustment	• Check the F-CAN communication line for a DTC (see page 22-243). • Check the A/T gear position indicator drive circuit in the gauge control module (tach) by using the gauge control module self-diagnostic function (see page 22-224). • Inspect the transmission range switch (see page 14-211). • Check for a loose shift cable at the shift lever and the selector control lever.
Shift lever cannot be moved from P while pressing on the brake pedal	• Shift lock solenoid defective • Shift lock solenoid control circuit • Shift lock mechanism defective • Brake switch circuit • Brake switch defective • Accelerator pedal position sensor circuit • Accelerator pedal position sensor defective • Throttle body defective • Transmission range switch ATPP switch stuck OFF • Transmission range switch ATPP switch line opened	• Inspect the APP sensor signal (see page 11-277). • Troubleshoot the shift lock system circuit (see page 14-217). • Test the shift lock solenoid (see page 14-223). • Inspect the transmission range switch (see page 14-211).
Ignition switch cannot be moved from ACCESSORY (I) to LOCK (0) (key is pushed in, the shift lever in P)	• Interlock control system circuit • Key interlock solenoid stuck ON • Park pin switch stuck OFF • Transmission range switch	• Troubleshoot the key interlock system circuit (see page 14-222). • Inspect the transmission range switch (see page 14-211).
HDS does not communicate with the PCM	DLC circuit error	Troubleshooting the DLC circuit (see page 11-213).

Symptom	Probable cause(s)	Notes
Engine does not start	1. Shift cable broken or out of adjustment 2. PCM defective 3. Transmission range switch defective 4. Flywheel assembly defective	• Check for a loose shift cable at the shift lever and the transmission control lever. • Check for a stored DTC, and check for a loose transmission range switch connector.
Engine runs, but vehicle does not move in any position	1. Intermediate housing assembly worn or damaged 2. Pulley pressure feed pipe damaged or out of round 3. Start clutch defective 4. Start clutch feed pipe damaged or out of round 5. Input shaft worn or damaged 6. Secondary drive gear or secondary driven gear worn or damaged 7. Final driven gear worn or damaged 8. Sun gear worn or damaged 9. Detent lever assembly worn or damaged 10. Control lever worn or damaged 11. Park pawl and pawl shaft worn or damaged 12. ATF pump worn, binding, or foreign material in ATF pump 13. ATF pump chain or ATF pump sprocket worn or damaged 14. Low CVTF level 15. ATF strainer or ATF filter clogged 16. Valve body assembly defective 17. CVT driven pulley pressure control valve defective 18. CVT drive pulley pressure control valve defective 19. CVT start clutch pressure control valve defective 20. Manual valve body defective 21. Manual valve lines worn or damaged 22. Solenoid harness worn or damaged 23. PCM defective 24. Transmission range switch defective 25. Flywheel drive plate worn or damaged 26. Flywheel assembly defective 27. Engine output low	• Check the drive and driven pulley pressure, and lubrication pressure. If the pressure is low or there is no pressure, check the ATF pump, the ATF pump chain, and the ATF pump sprocket. • Inspect the differential pinion gears for wear. If the differential pinion gears are worn, replace the differential assembly, replace the ATF strainer, and thoroughly clean the transmission, the ATF cooler, and the ATF cooler lines. • Check the CVTF level, and check the ATF cooler lines for leakage and loose connections. If necessary, clean the ATF cooler lines. • If the strainer is clogged, find the damaged components that caused debris. • Check for a stored DTC, and check for a loose solenoid harness connector and the transmission range switch connector.

(cont'd)

Symptom Troubleshooting Index (cont'd)

Symptom	Probable cause(s)	Notes
Vehicle does not move in D, L, and S	1. Forward clutch defective 2. Reverse brake piston stuck, worn, or damaged 3. Sun gear worn or damaged 4. Shift cable broken or out of adjustment 5. Manual valve lever and pin worn 6. Manual valve body defective 7. PCM defective 8. Transmission range switch defective 9. Engine output low	• Check the forward clutch pressure. • Inspect the clutch piston, the clutch piston check valve, and the O-rings. Check the spring retainer for wear and damage. Inspect the clearance between the clutch end-plate and the top disc. If the clearance is out of tolerance, inspect the clutch discs and plates for wear and damage. If the discs and plates are worn or damaged, replace them as a set. If they are OK, adjust the clearance with the clutch end-plate. • Check for a loose shift cable at the shift lever and the selector control shaft. • Check for a stored DTC, and check for a loose transmission range switch connector.
Vehicle does not move in R	1. Forward clutch defective 2. Reverse brake defective 3. Reverse brake piston stuck, worn, or damaged 4. Planetary carrier assembly worn or damaged 5. Sun gear worn or damaged 6. Ring gear worn or damaged 7. Input shaft needle bearing worn or damaged 8. Thrust needle bearing on planetary carrier seized, worn or damaged 9. Thrust washer on planetary carrier seized, worn or damaged 10. Shift cable broken or out of adjustment 11. Manual valve lever and pin worn 12. Manual valve body defective 13. Solenoid harness worn or damaged 14. Transmission range switch defective 15. Engine output low	• Check the forward clutch pressure. • Inspect the clutch piston, the clutch piston check valve, and the O-rings. Check the spring retainer for wear and damage. Inspect the clearance between the clutch end-plate and the top disc. If the clearance is out of tolerance, inspect the clutch discs and plates for wear and damage. If the discs and plates are worn or damaged, replace them as a set. If they are OK, adjust the clearance with the clutch end-plate. • Check for a loose shift cable at the shift lever and the selector control lever. • Check the reverse brake pressure. • Inspect the brake piston and the O-rings. Check the spring retainer for wear and damage. Inspect the clearance between the brake end-plate and the top disc. If the clearance is out of tolerance, inspect the brake discs and plates for wear and damage. If the discs and plates are worn or damaged, replace them as a set. If they are OK, adjust the clearance with the brake end-plate. • Check the needle bearing and the thrust washers on the planetary carrier for wear and damage. If the needle bearing or the thrust washer is worn or damaged, replace the bearing or the washer, and adjust the clearance with the thrust shim. • Check for a stored DTC, and check for a loose solenoid harness connector and the transmission range switch connector.

Symptom	Probable cause(s)	Notes
Engine stops when shifted to D from N	1. Intermediate housing assembly worn or damaged 2. Reverse brake defective 3. Reverse brake piston stuck, worn or damaged 4. Start clutch defective 5. Start clutch end-plate clearance incorrect 6. ATF strainer or ATF filter clogged 7. CVT driven pulley pressure control valve defective 8. CVT drive pulley pressure control valve defective 9. CVT start clutch pressure control valve defective 10. Manual valve body defective 11. Manual valve body lines worn or damaged 12. Solenoid harness worn or damaged 13. PCM defective 14. Start clutch control system memory in PCM defective 15. Engine output low	• Check the reverse brake pressure. • Inspect the reverse brake piston and the O-rings. Check the spring retainer for wear and damage. Inspect the clearance between the reverse brake end-plate and the top disc. If the clearance is out of tolerance, inspect the reverse brake discs and plates for wear and damage. If the discs and plates are worn or damaged, replace them as a set. If they are OK, adjust the clearance with the reverse brake end-plate. • Check for a stored DTC, and check for a loose solenoid harness connector and the transmission range switch connector. • Calibrate the start clutch control system.
Engine stops when shifted to R from N	1. Intermediate housing assembly worn or damaged 2. Forward clutch defective 3. Start clutch defective 4. Start clutch end-plate clearance incorrect 5. Planetary carrier worn or damaged 6. Thrust needle bearing on planetary carrier seized, worn or damaged 7. Thrust washer on planetary carrier seized, worn or damaged 8. Valve body assembly defective 9. CVT driven pulley pressure control valve defective 10. CVT drive pulley pressure control valve defective 11. CVT start clutch pressure control valve defective 12. Manual valve body defective 13. Solenoid harness worn or damaged 14. PCM defective 15. Start clutch control system memory in PCM defective 16. Engine output low	• Check the forward clutch pressure. • Inspect the clutch piston, the clutch piston check valve, and the O-rings. Check the spring retainer for wear and damage. Inspect the clearance between the clutch end-plate and the top disc. If the clearance is out of tolerance, inspect the clutch discs and plates for wear and damage. If the discs and plates are worn or damaged, replace them as a set. If they are OK, adjust the clearance with the clutch end-plate. • Check the needle bearing and the thrust washers on the planetary carrier for wear and damage. If the needle bearing or thrust washer is worn or damaged, replace the bearing or washer, and adjust the clearance with the thrust shim. • Check for a stored DTC, and check for a loose solenoid harness connector and the transmission range switch connector. • Calibrate the start clutch control system.

(cont'd)

Symptom Troubleshooting Index (cont'd)

Symptom	Probable cause(s)	Notes
No shift to higher ratio or lower ratio	1. Intermediate housing assembly worn or damaged 2. Pulley pressure feed pipe damaged or out of round 3. ATF pump worn, binding or foreign material in ATF pump 4. Low CVTF level 5. ATF strainer or ATF filter clogged 6. Valve body assembly defective 7. CVT driven pulley pressure control valve defective 8. CVT drive pulley pressure control valve defective 9. Solenoid harness worn or damaged 10. CVT input shaft (drive pulley) and output shaft (driven pulley) speed sensors defective 11. CVT speed sensor and CVT speed sensor (secondary) defective ('06 model) 12. CVT speed sensor defective ('07-09 models) 13. PCM defective	• Check the drive and driven pulley pressure, and lubrication pressure. If the pressure is low or there is no pressure, check the ATF pump, the ATF pump chain, and the ATF pump sprocket. • Check the CVTF level, and check the ATF cooler lines for leakage and loose connections. If necessary, clean the ATF cooler lines. • If the strainer is clogged, find the damaged components that caused debris. • Check for a stored DTC, and check for a loose solenoid harness connector.
Poor acceleration	1. Intermediate housing assembly worn or damaged 2. Pulley pressure feed pipe damaged or out of round 3. ATF strainer or ATF filter clogged 4. Valve body assembly defective 5. CVT driven pulley pressure control valve defective 6. CVT drive pulley pressure control valve defective 7. Manual valve lines worn or damaged 8. Solenoid valve defective 9. Solenoid harness worn or damaged 10. CVT input shaft (drive pulley) and output shaft (driven pulley) speed sensors defective 11. CVT speed sensor and CVT speed sensor (secondary) defective ('06 model) 12. CVT speed sensor defective ('07-09 models) 13. PCM defective 14. Engine output low 15. IMA motor defective	• Check the drive and driven pulley pressure, and lubrication pressure. If the pressure is low or there is no pressure, check the ATF pump, the ATF pump chain, and the ATF pump sprocket. • Check the CVTF level, and check the ATF cooler lines for leakage and loose connections. If necessary, clean the ATF cooler lines. • If the strainer is clogged, find the damaged components that caused debris. • Check for a stored DTC, and check for a loose solenoid harness connector.

Symptom	Probable cause(s)	Notes
Flares while driving	1. Intermediate housing assembly worn or damaged 2. Pulley pressure feed pipe damaged or out of round 3. Forward clutch defective 4. Reverse brake defective 5. Reverse brake piston stuck, worn or damaged 6. Start clutch defective 7. Start clutch end-plate clearance incorrect 8. Start clutch feed pipe damaged or out of round 9. Low CVTF level 10. ATF strainer or ATF filter clogged 11. CVTF deteriorated 12. Valve body assembly defective 13. CVT driven pulley pressure control valve defective 14. CVT drive pulley pressure control valve defective 15. CVT start clutch pressure control valve defective 16. Manual valve body defective 17. Manual valve lines worn or damaged 18. Solenoid valve defective 19. Solenoid harness worn or damaged 20. CVT input shaft (drive pulley) and output shaft (driven pulley) speed sensors defective 21. CVT speed sensor and CVT speed sensor (secondary) defective ('06 model) 22. CVT speed sensor defective ('07-09 model) 23. PCM defective	• Check the drive and driven pulley pressure, and lubrication pressure. If the pressure is low or there is no pressure, check the ATF pump, the ATF pump chain, and the ATF pump sprocket. • Check the forward clutch pressure. • Inspect the clutch piston, the clutch piston check valve, and the O-rings. Check the spring retainer for wear and damage. Inspect the clearance between the clutch end-plate and the top disc. If the clearance is out of tolerance, inspect the clutch discs and plates for wear and damage. If the discs and plates are worn or damaged, replace them as a set. If they are OK, adjust the clearance with the clutch end-plate. • Check the reverse brake pressure. • Inspect the reverse brake piston and the O-rings. Check the spring retainer for wear and damage. Inspect the clearance between the reverse brake end-plate and the top disc. If the clearance is out of tolerance, inspect the reverse brake discs and plates for wear and damage. If the discs and plates are worn or damaged, replace them as a set. If they are OK, adjust the clearance with the reverse brake end-plate. • Check for a stored DTC, and check for a loose solenoid harness connector.

(cont'd)

Symptom Troubleshooting Index (cont'd)

Symptom	Probable cause(s)	Notes
Excessive shock when accelerating and decelerating	1. Intermediate housing assembly worn or damaged 2. Pulley pressure feed pipe damaged or out of round 3. Forward clutch defective 4. Reverse brake defective 5. Reverse brake piston stuck, worn or damaged 6. Start clutch defective 7. Start clutch end-plate clearance incorrect 8. Start clutch feed pipe damaged or out of round 9. Low CVTF level 10. CVTF deteriorated 11. Valve body assembly defective 12. CVT driven pulley pressure control valve defective 13. CVT drive pulley pressure control valve defective 14. CVT start clutch pressure control valve defective 15. Manual valve body defective 16. Manual valve lines worn or damaged 17. PCM defective 18. Start clutch control system memory in PCM defective 19. Flywheel assembly defective 20. IMA motor defective	• Check the drive and driven pulley pressure, and lubrication pressure. If the pressure is low or there is no pressure, check the ATF pump, the ATF pump chain, and the ATF pump sprocket. • Check the forward clutch pressure. • Inspect the clutch piston, the clutch piston check valve, and the O-rings. Check the spring retainer for wear and damage. Inspect the clearance between the clutch end-plate and the top disc. If the clearance is out of tolerance, inspect the clutch discs and plates for wear and damage. If the discs and plates are worn or damaged, replace them as a set. If they are OK, adjust the clearance with the clutch end-plate. • Check the reverse brake pressure. • Inspect the reverse brake piston and the O-rings. Check the spring retainer for wear and damage. Inspect the clearance between the reverse brake end-plate and the top disc. If the clearance is out of tolerance, inspect the reverse brake discs and plates for wear and damage. If the discs and plates are worn or damaged, replace them as a set. If they are OK, adjust the clearance with the reverse brake end-plate. • Check for a stored DTC, and check for a loose solenoid harness connector. • Check the CVTF level, and check the ATF cooler lines for leakage and loose connections. If necessary, clean the ATF cooler lines. • Calibrate the start clutch control system.
No engine braking	1. Intermediate housing assembly worn or damaged 2. Pulley pressure feed pipe damaged or out of round 3. Start clutch defective 4. Start clutch feed pipe damaged or out of round 5. Valve body assembly defective 6. CVT driven pulley pressure control valve defective 7. CVT drive pulley pressure control valve defective 8. CVT start clutch pressure control valve defective 9. Manual valve body defective 10. Manual valve lines worn or damaged 11. Solenoid valve defective 12. Solenoid harness worn or damaged 13. CVT input shaft (drive pulley) and output shaft (driven pulley) speed sensors defective 14. CVT speed sensor and CVT speed sensor (secondary) defective ('06 model) 15. CVT speed sensor defective ('07-09 models) 16. PCM defective 17. IMA motor defective	• Check the drive and driven pulley pressure, and lubrication pressure. If the pressure is low or there is no pressure, check the ATF pump, the ATF pump chain, and the ATF pump sprocket. • Check for a stored DTC, and check for a loose solenoid harness connector.

Symptom	Probable cause(s)	Notes
Vehicle does not creep on a flat road in D, S, and L	1. Intermediate housing assembly worn or damaged 2. Pulley pressure feed pipe damaged or out of round 3. Start clutch defective 4. Start clutch end-plate clearance incorrect 5. Start clutch feed pipe damaged or out of round 6. Low CVTF level 7. CVTF deteriorated 8. Valve body assembly defective 9. CVT driven pulley pressure control valve defective 10. CVT drive pulley pressure control valve defective 11. CVT start clutch pressure control valve defective 12. Manual valve body defective 13. Manual valve lines worn or damaged 14. Solenoid valve defective 15. Solenoid harness worn or damaged 16. CVT input shaft (drive pulley) and output shaft (driven pulley) speed sensors defective 17. CVT speed sensor and CVT speed sensor (secondary) defective ('06 model) 18. CVT speed sensor defective ('07-09 models) 19. PCM defective 20. Start clutch control system memory in PCM defective 21. Engine output low	• Check the drive and driven pulley pressure, and lubrication pressure. If the pressure is low or there is no pressure, check the ATF pump, the ATF pump chain, and the ATF pump sprocket. • Check the CVTF level, and check the ATF cooler lines for leakage and loose connections. If necessary, clean the ATF cooler lines. • Check for a stored DTC, and check for a loose solenoid harness connector. • Calibrate the start clutch control system.

(cont'd)

Symptom Troubleshooting Index (cont'd)

Symptom	Probable cause(s)	Notes
Vehicle moves in N, shift cable is properly adjusted	1. Intermediate housing assembly worn or damaged 2. Forward clutch defective 3. Reverse brake defective 4. Reverse brake piston stuck, worn or damaged 5. Input shaft worn or damaged 6. Input shaft needle bearing seized, worn or damaged 7. Manual valve lever and pin worn 8. Manual valve body defective	• Check the forward clutch pressure. • Inspect the clutch piston, the clutch piston check valve, and the O-rings. Check the spring retainer for wear and damage. Inspect the clearance between the clutch end-plate and the top disc. If the clearance is out of tolerance, inspect the clutch discs and plates for wear and damage. If the discs and plates are worn or damaged, replace them as a set. If they are OK, adjust the clearance with the clutch end-plate. • Check the reverse brake pressure. • Inspect the reverse brake piston and the O-rings. Check the spring retainer for wear and damage. Inspect the clearance between the reverse brake end-plate and the top disc. If the clearance is out of tolerance, inspect the reverse brake discs and plates for wear and damage. If the discs and plates are worn or damaged, replace them as a set. If they are OK, adjust the clearance with the reverse brake end-plate.
Late shift after shifting from N to D	1. Pulley pressure feed pipe damaged or out of round 2. Forward clutch defective 3. Start clutch defective 4. Start clutch end-plate clearance incorrect 5. Start clutch feed pipe damaged or out of round 6. Shift cable broken or out of adjustment 7. Manual valve lever and pin worn 8. Low CVTF level 9. ATF strainer or ATF filter clogged 10. CVTF deteriorated 11. Valve body assembly defective 12. CVT start clutch pressure control valve defective 13. Manual valve body defective 14. Manual valve lines worn or damaged 15. PCM defective 16. Transmission range switch defective	• Check the drive and driven pulley pressure, and lubrication pressure. If the pressure is low or there is no pressure, check the ATF pump, the ATF pump chain, and the ATF pump sprocket. • Check the forward clutch pressure. • Inspect the clutch piston, the clutch piston check valve, and the O-rings. Check the spring retainer for wear and damage. Inspect the clearance between the clutch end-plate and the top disc. If the clearance is out of tolerance, inspect the clutch discs and plates for wear and damage. If the discs and plates are worn or damaged, replace them as a set. If they are OK, adjust the clearance with the clutch end-plate. • Check for a stored DTC, and check for a loose solenoid harness connector. • Check for a loose shift cable at the shift lever and the selector control lever. • Check the CVTF level, and check the ATF cooler lines for leakage and loose connections. If necessary, clean the ATF cooler lines. • Check for a stored DTC, and check for a loose transmission range switch connector.

Symptom	Probable cause(s)	Notes
Late shift after shifting from N to R	1. Pulley pressure feed pipe damaged or out of round 2. Reverse brake defective 3. Reverse brake piston stuck, worn or damaged 4. Reverse brake return springs/retainer worn or damaged 5. Start clutch defective 6. Start clutch end-plate clearance incorrect 7. Start clutch feed pipe damaged or out of round 8. Shift cable broken or out of adjustment 9. Manual valve lever and pin worn 10. Low CVTF level 11. ATF strainer or ATF filter clogged 12. CVTF deteriorated 13. Valve body assembly defective 14. CVT start clutch pressure control valve defective 15. Manual valve body defective 16. Manual valve lines worn or damaged 17. Solenoid valve defective 18. PCM defective 19. Transmission range switch defective	• Check the drive and driven pulley pressure, and lubrication pressure. If the pressure is low or there is no pressure, check the ATF pump, the ATF pump chain, and the ATF pump sprocket. • Check the reverse brake pressure. • Inspect the reverse brake piston and the O-rings. Check the spring retainer for wear and damage. Inspect the clearance between the reverse brake end-plate and the top disc. If the clearance is out of tolerance, inspect the reverse brake discs and plates for wear and damage. If the discs and plates are worn or damaged, replace them as a set. If they are OK, adjust the clearance with the reverse brake end-plate. • Check for a stored DTC, and check for a loose solenoid harness connector. • Check for a loose shift cable at the shift lever and the selector control lever. • Check the CVTF level, and check the ATF cooler lines for leakage and loose connections. If necessary, clean the ATF cooler lines. • Check for a stored DTC, and check for a loose transmission range switch connector.

(cont'd)

Symptom Troubleshooting Index (cont'd)

Symptom	Probable cause(s)	Notes
Unstable rpm while driving	1. Intermediate housing assembly worn or damaged 2. Pulley pressure feed pipe damaged or out of round 3. Forward clutch defective 4. Reverse brake defective 5. Reverse brake piston stuck, worn or damaged 6. Start clutch defective 7. Start clutch end-plate clearance incorrect 8. Start clutch feed pipe damaged or out of round 9. ATF pump worn, binding, or foreign material in ATF pump 10. Low CVTF level 11. ATF strainer or ATF filter clogged 12. CVTF deteriorated 13. Valve body assembly defective 14. CVT driven pulley pressure control valve defective 15. CVT drive pulley pressure control valve defective 16. CVT start clutch pressure control valve defective 17. Manual valve body defective 18. Manual valve lines worn or damaged 19. Solenoid valve defective 20. Solenoid harness worn or damaged 21. CVT input shaft (drive pulley) and output shaft (driven pulley) speed sensors defective 22. CVT speed sensor and CVT speed sensor (secondary) defective ('06 model) 23. CVT speed sensor defective ('07-09 models) 24. PCM defective 25. Start clutch control system memory in PCM defective 26. Engine output low 27. IMA motor defective	• Check the drive and driven pulley pressure, and lubrication pressure. If the pressure is low or there is no pressure, check the ATF pump, the ATF pump chain, and the ATF pump sprocket. • Check the forward clutch pressure. • Inspect the clutch piston, the clutch piston check valve, and the O-rings. Check the spring retainer for wear and damage. Inspect the clearance between the clutch end-plate and the top disc. If the clearance is out of tolerance, inspect the clutch discs and plates for wear and damage. If the discs and plates are worn or damaged, replace them as a set. If they are OK, adjust the clearance with the clutch end-plate. • Check for a stored DTC, and check for a loose solenoid harness connector. • Check the reverse brake pressure. • Inspect the reverse brake piston and the O-rings. Check the spring retainer for wear and damage. Inspect the clearance between the reverse brake end-plate and the top disc. If the clearance is out of tolerance, inspect the reverse brake discs and plates for wear and damage. If the discs and plates are worn or damaged, replace them as a set. If they are OK, adjust the clearance with the reverse brake end-plate. • Check the CVTF level, and check the ATF cooler lines for leakage and loose connections. If necessary, clean the ATF cooler lines. • Calibrate the start clutch control system.

Symptom	Probable cause(s)	Notes
Excessive shock when starting off	1. Forward clutch defective 2. Reverse brake defective 3. Reverse brake piston stuck, worn or damaged 4. Start clutch defective 5. Start clutch end-plate clearance incorrect 6. Start clutch feed pipe damaged or out of round 7. Low CVTF level 8. CVTF deteriorated 9. Valve body assembly defective 10. CVT driven pulley pressure control valve defective 11. CVT drive pulley pressure control valve defective 12. CVT start clutch pressure control valve defective 13. Solenoid harness worn or damaged 14. PCM defective 15. Start clutch control system memory in PCM defective 16. Engine output low 17. IMA motor defective	• Check the forward clutch pressure. • Inspect the clutch piston, the clutch piston check valve, and the O-rings. Check the spring retainer for wear and damage. Inspect the clearance between the clutch end-plate and the top disc. If the clearance is out of tolerance, inspect the clutch discs and plates for wear and damage. If the discs and plates are worn or damaged, replace them as a set. If they are OK, adjust the clearance with the clutch end-plate. • Check for a stored DTC, and check for a loose solenoid harness connector. • Check the reverse brake pressure. • Inspect the reverse brake piston and the O-rings. Check the spring retainer for wear and damage. Inspect the clearance between the reverse brake end-plate and the top disc. If the clearance is out of tolerance, inspect the reverse brake discs and plates for wear and damage. If the discs and plates are worn or damaged, replace them as a set. If they are OK, adjust the clearance with the reverse brake end-plate. • Check the CVTF level, and check the ATF cooler lines for leakage and loose connections. If necessary, clean the ATF cooler lines. • Calibrate the start clutch control system.

(cont'd)

Symptom Troubleshooting Index (cont'd)

Symptom	Probable cause(s)	Notes
Excessive vibration in D, S, L, and R	1. Intermediate housing assembly worn or damaged 2. Forward clutch defective 3. Reverse brake defective 4. Reverse brake piston stuck, worn or damaged 5. Start clutch defective 6. Start clutch end-plate clearance incorrect 7. Start clutch feed pipe damaged or out of round 8. Input shaft worn or damaged 9. CVTF deteriorated 10. Valve body assembly defective 11. CVT driven pulley pressure control valve defective 12. CVT drive pulley pressure control valve defective 13. CVT start clutch pressure control valve defective 14. Solenoid valve defective 15. Solenoid harness worn or damaged 16. PCM defective 17. Start clutch control system memory in PCM defective 18. Flywheel drive plate worn or damaged 19. Flywheel assembly defective 20. Engine output low 21. IMA motor defective	• Check the forward clutch pressure. • Inspect the clutch piston, the clutch piston check valve, and the O-rings. Check the spring retainer for wear and damage, inspect the clearance between the clutch end-plate and the top disc. If the clearance is out of tolerance, inspect the clutch discs and plates for wear and damage. If the discs and plates are worn or damaged, replace them as a set. If they are OK, adjust the clearance with the clutch end-plate. • Check for a stored DTC, and check for a loose solenoid harness connector. • Check the reverse brake pressure. • Inspect the reverse brake piston and the O-rings. Check the spring retainer for wear and damage. Inspect the clearance between the reverse brake end-plate and the top disc. If the clearance is out of tolerance, inspect the reverse brake discs and plates for wear and damage. If the discs and plates are worn or damaged, replace them as a set. If they are OK, adjust the clearance with the reverse brake end-plate. • Check the CVTF level, and check the ATF cooler lines for leakage and loose connections. If necessary, clean the ATF cooler lines. • Calibrate the start clutch control system.
Excessive idle vibration in N and P	1. Intermediate housing assembly worn or damaged 2. Input shaft worn or damaged 3. Flywheel drive plate worn or damaged 4. Flywheel assembly defective 5. Engine output low 6. IMA motor defective	Set idle rpm to the specified idle speed. If still no good, adjust the engine and the transmission mounts.

Symptom	Probable cause(s)	Notes
Noise from transmission in N and P	1. Intermediate housing assembly worn or damaged 2. Input shaft worn or damaged 3. Planetary carrier worn or damaged 4. Input shaft needle bearing seized, worn or damaged 5. Thrust needle bearing on planetary carrier seized, worn or damaged 6. Thrust washer on planetary carrier seized, worn or damaged 7. ATF pump worn, binding, or foreign material in ATF pump 8. ATF pump chain or ATF pump sprocket worn or damaged 9. Flywheel assembly defective	Check the needle bearing and the thrust washers on the planetary carrier for wear and damage. If the needle bearing or thrust washer is worn or damaged, replace the bearing or washer, and adjust the clearance with the thrust shim.
Vibration in all positions	1. Flywheel drive plate worn or damaged 2. Flywheel assembly defective 3. IMA motor defective	
Stall speed low	1. Intermediate housing assembly worn or damaged 2. Pulley pressure feed pipe damaged or out of round 3. Start clutch defective 4. Valve body assembly defective 5. CVT driven pulley pressure control valve defective 6. CVT drive pulley pressure control valve defective 7. CVT start clutch pressure control valve defective 8. CVT input shaft (drive pulley) and output shaft (driven pulley) speed sensors defective 9. PCM defective 10. Transmission range switch defective 11. Engine output low 12. IMA motor defective	• Check the drive and driven pulley pressure, and lubrication pressure. If the pressure is low or there is no pressure, check the ATF pump, the ATF pump chain, and the ATF pump sprocket. • Check for a stored DTC, and check for a loose solenoid harness connector, and transmission range switch connector.

(cont'd)

Symptom Troubleshooting Index (cont'd)

Symptom	Probable cause(s)	Notes
Stall speed high	1. Intermediate housing assembly worn or damaged 2. Pulley pressure feed pipe damaged or out of round 3. Forward clutch defective 4. Reverse brake defective 5. Reverse brake piston stuck, worn or damaged 6. Start clutch defective 7. Start clutch end-plate clearance incorrect 8. Start clutch feed pipe damaged or out of round 9. ATF pump worn, binding, or foreign material in ATF pump 10. Low CVTF level 11. CVTF deteriorated 12. Valve body assembly defective 13. CVT driven pulley pressure control valve defective 14. CVT drive pulley pressure control valve defective 15. CVT start clutch pressure control valve defective 16. Manual valve body defective 17. Manual valve lines worn or damaged 18. Solenoid harness worn or damaged 19. CVT input shaft (drive pulley) and output shaft (driven pulley) speed sensors defective 20. PCM defective 21. Transmission range switch defective	• Check the drive and driven pulley pressure, and lubrication pressure. If the pressure is low or there is no pressure, check the ATF pump, the ATF pump chain, and the ATF pump sprocket. • Check the forward clutch pressure. • Inspect the clutch piston, the clutch piston check valve, and the O-rings. Check the spring retainer for wear and damage, inspect the clearance between the clutch end-plate and the top disc. If the clearance is out of tolerance, inspect the clutch discs and plates for wear and damage. If the discs and plates are worn or damaged, replace them as a set. If they are OK, adjust the clearance with the clutch end-plate. • Check for a stored DTC, and check for a loose solenoid harness connector. • Check the reverse brake pressure. • Inspect the reverse brake piston and the O-rings. Check the spring retainer for wear and damage. Inspect the clearance between the reverse brake end-plate and the top disc. If the clearance is out of tolerance, inspect the reverse brake discs and plates for wear and damage. If the discs and plates are worn or damaged, replace them as a set. If they are OK, adjust the clearance with the reverse brake end-plate. • Check the CVTF level, and check the ATF cooler lines for leakage and loose connections. If necessary, clean the ATF cooler lines. • Check for a stored DTC, and check for a loose transmission range switch connector.

HONDA

Symptom	Probable cause(s)	Notes
Judder when starting off	1. Start clutch defective 2. CVTF deteriorated or worn out 3. Valve body assembly defective 4. CVT start clutch pressure control valve defective 5. CVT input shaft (drive pulley) and output shaft (driven pulley) speed sensors defective 6. CVT speed sensor and CVT speed sensor (secondary) defective ('06 model) 7. CVT speed sensor defective ('07-09 models) 8. PCM defective	• Check for a stored DTC, and check for a loose solenoid harness connector. • Check the CVTF level, and check the ATF cooler lines for leakage and loose connections. Clean the ATF cooler lines, and replace the CVTF. • Check the start clutch with the HDS.
Noise from transmission in R	1. Reverse brake defective 2. Reverse brake piston stuck, worn or damaged 3. Reverse brake return springs/retainer worn or damaged 4. Start clutch defective 5. Input shaft worn or damaged 6. Secondary drive gear or secondary driven gear worn or damaged 7. Final driven gear worn or damaged 8. Planetary carrier worn or damaged 9. Sun gear worn or damaged 10. Ring gear worn or damaged 11. Input shaft needle bearing seized, worn or damaged 12. Thrust needle bearing on planetary carrier seized, worn or damaged 13. Thrust washer on planetary carrier seized, worn or damaged 14. Detent lever assembly worn or damaged 15. Park pawl and pawl shaft worn or damaged 16. Park pawl spring worn or damaged 17. Low CVTF level 18. CVTF deteriorated 19. Flywheel assembly defective	• Check the reverse brake pressure. • Inspect the reverse brake piston and the O-rings. Check the spring retainer for wear and damage. Inspect the clearance between the reverse brake end-plate and the top disc. If the clearance is out of tolerance, inspect the reverse brake discs and plates for wear and damage. If the discs and plates are worn or damaged, replace them as a set. If they are OK, adjust the clearance with the reverse brake end-plate. • Check the needle bearing and the thrust washers on the planetary carrier for wear and damage. If the needle bearing or thrust washer is worn or damaged, replace the bearing or washer, and adjust the clearance with the thrust shim. • Check the CVTF level, and check the ATF cooler lines for leakage and loose connections. If necessary, clean the ATF cooler lines.

(cont'd)

Symptom Troubleshooting Index (cont'd)

Symptom	Probable cause(s)	Notes
Noise from transmission in D, S, and L	1. Intermediate housing assembly worn or damaged 2. Start clutch defective 3. Input shaft worn or damaged 4. Secondary drive gear or secondary driven gear worn or damaged 5. Final driven gear worn or damaged 6. Planetary carrier worn or damaged 7. Input shaft needle bearing seized, worn or damaged 8. Thrust needle bearing on planetary carrier seized, worn or damaged 9. Thrust washer on planetary carrier seized, worn or damaged 10. Detent lever assembly worn or damaged 11. Park pawl and pawl shaft worn or damaged 12. Park pawl spring worn or damaged 13. ATF pump worn, binding, or foreign material in ATF pump 14. ATF pump chain or ATF pump sprocket worn or damaged 15. Low CVTF level 16. CVTF deteriorated 17. Flywheel assembly defective	• Check the CVTF level, and check the ATF cooler lines for leakage and loose connections. If necessary, clean the ATF cooler lines. • Check the drive and driven pulley pressure, and lubrication pressure. If the pressure is low or there is no pressure, check the ATF pump, the ATF pump chain, and the ATF pump sprocket. • Inspect the differential pinion gears for wear. If the differential pinion gears are worn, replace the differential assembly, replace the ATF strainer, and thoroughly clean the transmission, the ATF cooler, and the ATF cooler lines. • Check the needle bearing and the thrust washers on the planetary carrier for wear and damage. If the needle bearing or thrust washer is worn or damaged, replace the bearing or washer, and adjust the clearance with the thrust shim.

HONDA

Symptom	Probable cause(s)	Notes
Shift lever does not operate smoothly	1. Detent lever assembly worn or damaged 2. Control lever worn or damaged 3. Park pawl and pawl shaft worn or damaged 4. Park gear worn or damaged 5. Park pawl spring worn or damaged 6. Shift cable broken or out of adjustment 7. Manual valve lever and pin worn 8. Manual valve body defective 9. Transmission range switch defective	• Check for loose shift cable at the shift lever and the selector control lever. • Check the park pawl spring installation. • Check for a stored DTC, and check for a loose transmission range switch connector.
Transmission will not shift into P, or transmission cannot shift out of P	1. Detent lever assembly worn or damaged 2. Control lever worn or damaged 3. Park pawl and pawl shaft worn or damaged 4. Park gear worn or damaged 5. Park pawl spring worn or damaged 6. Shift cable broken or out of adjustment 7. Manual valve lever and pin worn 8. Manual valve body defective 9. PCM defective 10. Transmission range switch defective	• Check for a loose shift cable at the shift lever and the selector control lever. • Check the park pawl spring installation. • Check for a stored DTC, and check for a loose transmission range switch connector.
A/T gear position indicator does not indicate shift lever positions	1. Detent lever assembly worn or damaged 2. Shift cable broken or out of adjustment 3. Transmission range switch defective 4. PCM defective	• Check for a loose shift cable at the shift lever and the selector control lever. • Check for a stored DTC, and check for a loose transmission range switch connector.

HONDA

Component Location Index

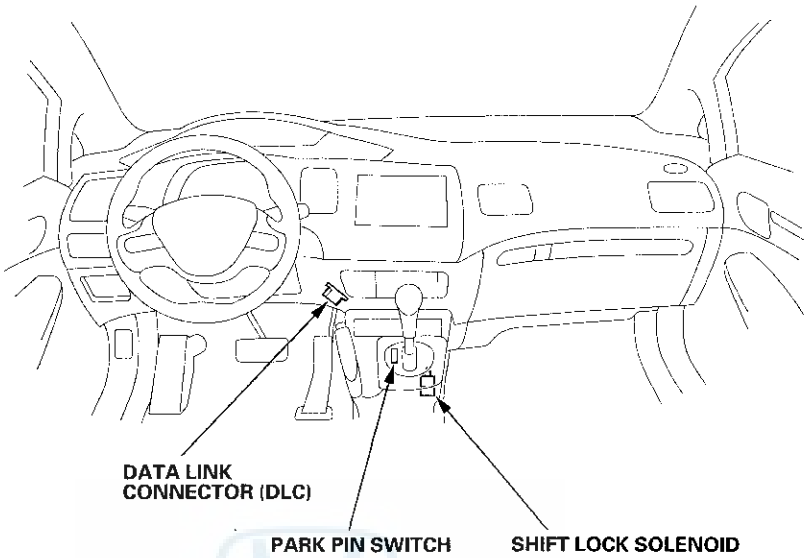

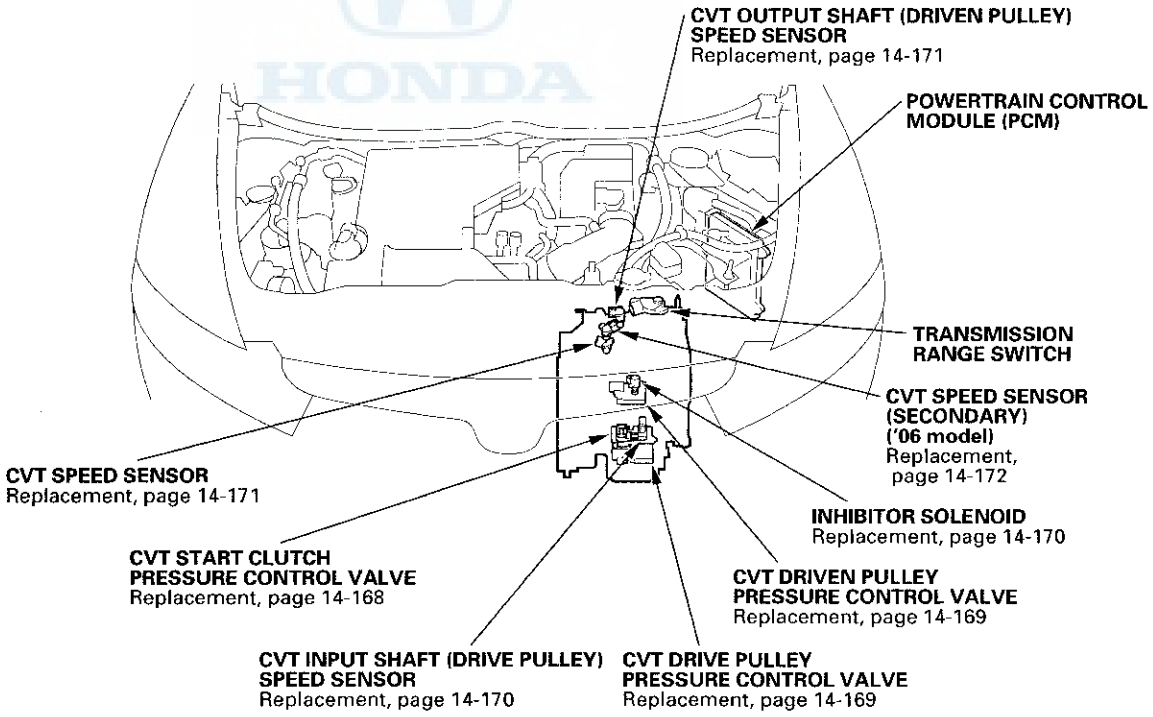

System Description

General Operation

The continuously variable transmission (CVT) is an electronically controlled automatic transmission with the drive and driven pulleys, and a steel belt. The CVT provides stepless forward speeds and one in reverse.

Transmission
Around the outside of the flywheel is a ring gear which meshes with the starter drive gear when the engine is being started. The transmission has four parallel shafts: the input shaft, the drive pulley shaft, the driven pulley shaft, and the final drive shaft. The input shaft is connected to the flywheel, which is connected to the IMA motor rotor through the drive plate. This is connected to the end of the engine crankshaft. The drive pulley shaft and the driven pulley shaft consists of movable and fixed face pulleys. Both pulleys are linked by the steel belt.
The input shaft includes the sun gear and the planetary gears with the carrier. The drive pulley shaft includes the drive pulley and the forward clutch. The driven pulley shaft includes the driven pulley, the start clutch, and the secondary drive gear which is integral with the park gear. The final drive shaft is positioned between the secondary drive gear and the final driven gear. The final drive shaft includes the secondary driven gear and the final drive gear which serves to change the rotation direction, because the drive pulley shaft and the driven pulley shaft rotate the same direction. When certain conditions of the planetary gears in the transmission are engaged by the forward clutch and the reverse brake, power is transmitted from the drive pulley shaft to the driven pulley shaft to provide L, S, D, and R positions.

Electronic Control
The electronic control system consists of the powertrain control module (PCM), sensors, and solenoid valves. Shifting is electronically controlled for comfortable driving under all conditions. The PCM is located in the engine compartment.

Hydraulic Control
The lower valve body assembly includes the main valve body, the secondary valve body, the CVT driven pulley pressure control valve, the CVT drive pulley pressure control valve, the CVT start clutch pressure control valve, and the inhibitor solenoid valve. These valve bodies are positioned on the lower portion of the transmission housing. The manual valve body is bolted on the intermediate housing.
The main valve body contains the start clutch shift valve, the shift inhibitor valve, the lubrication regulator valve, and cooler relief valve. The secondary valve body contains the pressure high (PH) regulator valve, the pressure high control (PHC) shift valve, the start clutch back-up valve, the clutch reducing valve, and the start clutch accumulator valve. The CVT driven pulley pressure control valve contains pulley control valve A and the driven pulley control valve with the solenoid. The CVT drive pulley pressure control valve contains pulley control valve B and the drive pulley control valve with the solenoid. The CVT start clutch pressure control valve consists of the start clutch pressure control valve and the solenoid. These solenoids are controlled by the PCM. The manual valve body contains the manual valve and the reverse inhibitor valve.
The ATF pump is located on the transmission housing, and it is linked with the input shaft by the sprockets and the sprocket chain. The pulleys, the forward clutch, and the start clutch receive fluid from their respective feed pipes, and the reverse brake receives fluid from an internal hydraulic circuit.

Shift Control
The PCM controls the shift pulley ratio through the solenoids, while receiving input signals from the various sensors and switches located throughout the vehicle. The PCM actuates the pulley control solenoids to control pulley control valves A and B. Drive pulley pressure is regulated at pulley control valve B and applied to the drive pulley, driven pulley pressure is regulated at pulley control valve A and applied to the driven pulley, and the pulley ratio is changed to their directed ratio.

(cont'd)

System Description (cont'd)

General Operation (cont'd)

Gear Selection
The shift lever has six positions; P: PARK, R: REVERSE, N: NEUTRAL, D: DRIVE, S: SECOND, and L: LOW.

Position	Description
P: PARK	Front wheels locked; park pawl engaged with the park gear on the driven pulley shaft. The start clutch and the forward clutch are released.
R: REVERSE	Reverse; reverse brake engaged.
N: NEUTRAL	Neutral; the start clutch and forward clutch released.
D: DRIVE	General driving; the transmission automatically adjusts to keep the engine at the best speed for driving under all conditions.
S: SECOND	For rapid acceleration; the transmission selects a lower range of ratios to give better acceleration.
L: LOW	For engine braking and power for climbing; the transmission shifts into the lowest range of the ratios. The IMA battery is charged at a higher rate when the transmission is in LOW (L) range. In L, the IMA charge and discharge characteristics will be different than when the vehicle is in D or S. In L, the battery is charged at higher rate both while driving and when the engine is idling at a stop.

Starting the engine is possible only in P and N through the use of a slide-type, neutral-safety switch.

Automatic Transmission (A/T) Gear Position Indicator
The A/T gear position indicator in the instrument panel shows what gear has been selected without looking down at the console.

HONDA

Clutches/Reverse Brake/Planetary Gear/Pulleys

Clutches/Reverse Brake

The CVT uses the hydraulic-actuated clutches and brake to engage and disengage the transmission gears. When hydraulic pressure is introduced into the clutch drum and the reverse brake piston cavity, the clutch piston and the reverse brake piston move. This presses the friction discs and the steel plates together, locking them so they do not slip. Power is then transmitted through the engaged clutch pack to its hub-mounted gear, and through the engaged ring gear to the pinion gears.

Likewise, when the hydraulic pressure is bled from the clutch pack and reverse brake piston cavity, the piston releases the friction discs and the steel plates, and they are free to slide past each other. This allows the gear to spin independently on its shaft, transmitting no power.

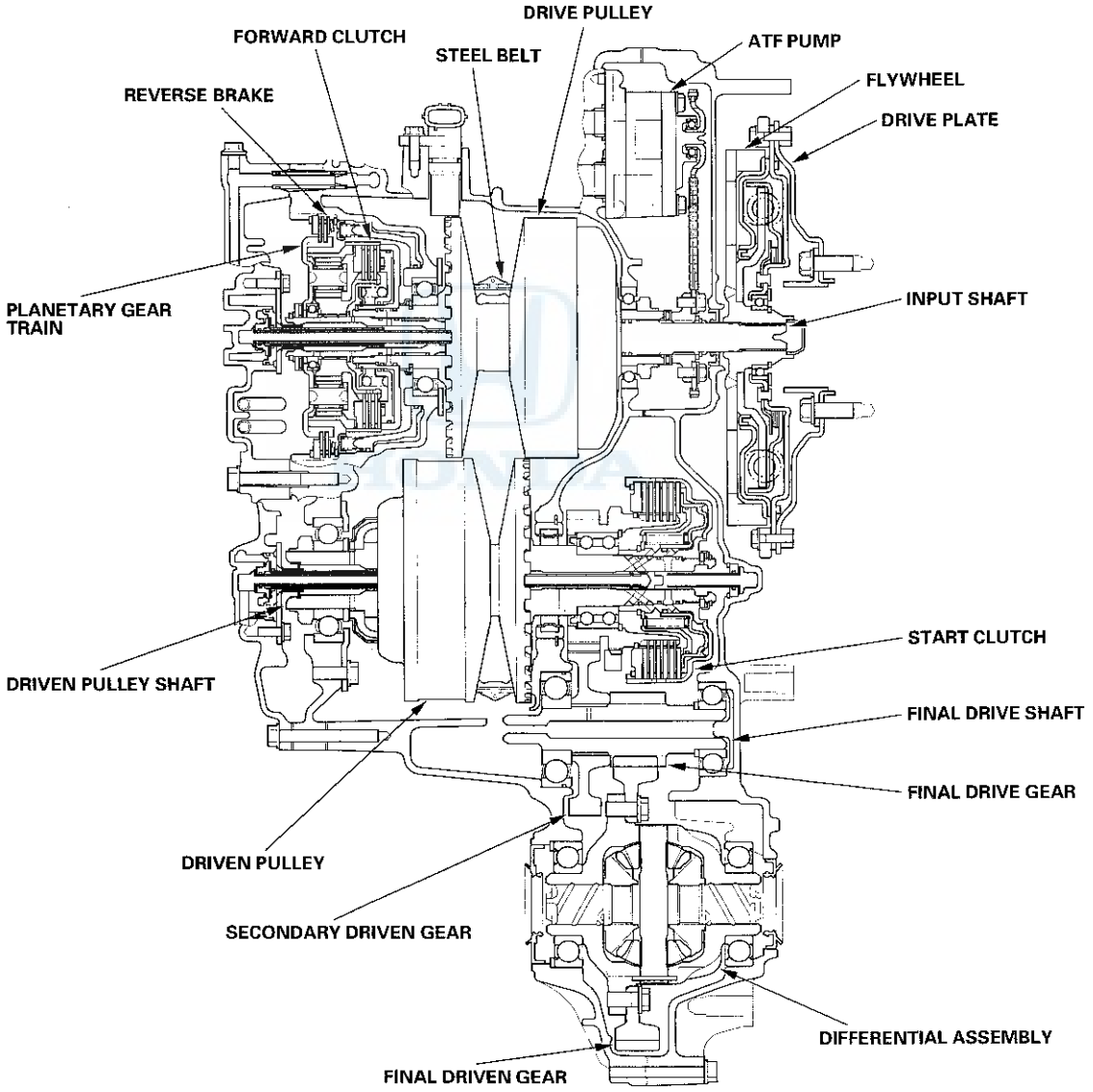

(cont'd)

System Description (cont'd)

Clutches/Reverse Brake/Planetary Gear/Pulleys (cont'd)

Start Clutch
The start clutch engages/disengages the secondary drive gear, and is located at the end of the driven pulley shaft. The start clutch is supplied hydraulic pressure by its ATF feed pipe within the driven pulley shaft.

Forward Clutch
The forward clutch engages/disengages the sun gear, and is located at the end of the drive pulley shaft. The forward clutch is supplied hydraulic pressure by its ATF feed pipe within the drive pulley shaft.

Reverse Brake
The reverse brake locks the planetary carrier in R, and is located inside the intermediate housing around the planetary carrier. The reverse brake discs are mounted to the planetary carrier and the reverse brake plates are mounted on the intermediate housing. The reverse brake is supplied hydraulic pressure by a circuit connected to the internal hydraulic circuit.

Planetary Gear Train
The planetary gear train is only used to switch the rotational direction of the pulley shafts in R. The planetary gear train consists of the sun gear, the planetary pinion gears, and the ring gear. The sun gear is connected to the input shaft with splines. The pinion gears are mounted on the planetary carrier. The planetary carrier is located on the end of the input shaft, over the sun gear. The ring gear is located in the planetary carrier, and connected to the forward clutch drum. The sun gear inputs the engine power via the input shaft to the planetary gears, and the carrier outputs the engine power.
In D, S, and L (forward range), the pinion gears do not rotate and revolve around the sun gear, so the carrier rotates. In R (reverse range), the reverse brake locks the planetary carrier, and the sun gear drives the pinion gears to rotate. The pinion gears rotate, but do not revolve around the sun gear. The pinion gears drive the ring gear in the opposite direction from the rotational direction of the sun gear.

Pulleys
Both pulleys consist of a movable face and a fixed face, and the effective pulley ratio changes with engine speed. The drive pulley and the driven pulley are linked by the steel belt. To achieve a low pulley ratio, high hydraulic pressure works on the movable face of the driven pulley and reduces the effective diameter of the drive pulley, and a lower hydraulic pressure works on the movable face of the driven pulley to eliminate the steel belt slippage. To achieve a high pulley ratio, high hydraulic pressure works on the movable face of the drive pulley and reduces the effective diameter of the driven pulley, and low hydraulic pressure works on the movable face of the drive pulley to eliminate the steel belt slippage.

Power Flow

P Position
Hydraulic pressure is not applied to the start clutch, the forward clutch, and the reverse brake. Power is not transmitted to the secondary drive gear. The secondary drive gear is locked by the park pawl interlocking the park gear.

N Position
Engine power transmitted from the flywheel drives the input shaft, but hydraulic pressure is not applied to the forward clutch and the reverse brake. Power is not transmitted to the drive pulley shaft. Also hydraulic pressure is not applied to the start clutch.

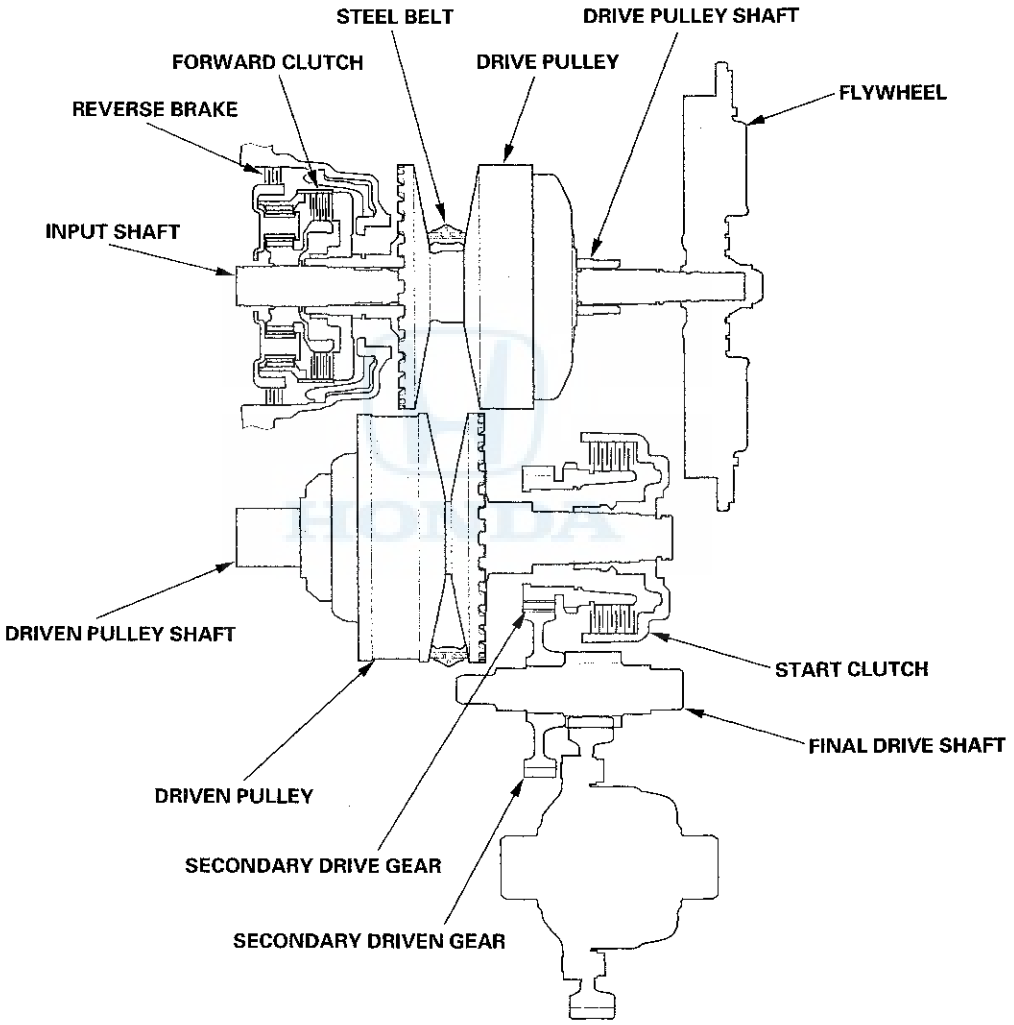

(cont'd)

System Description (cont'd)

Power Flow (cont'd)

Forward Range; D, S, and L Positions
- Forward clutch: engaged
- Reverse brake: released
- Start clutch: engaged
- Hydraulic pressure is applied to the forward clutch and the start clutch, and the sun gear drives the forward clutch.
- The forward clutch drives the drive pulley shaft, which drives the driven pulley shaft linked by the steel belt.
- The driven pulley shaft drives the secondary drive gear via the start clutch.
- Power is transmitted to the secondary driven gear and the final drive gear, which in turn drives the final driven gear.

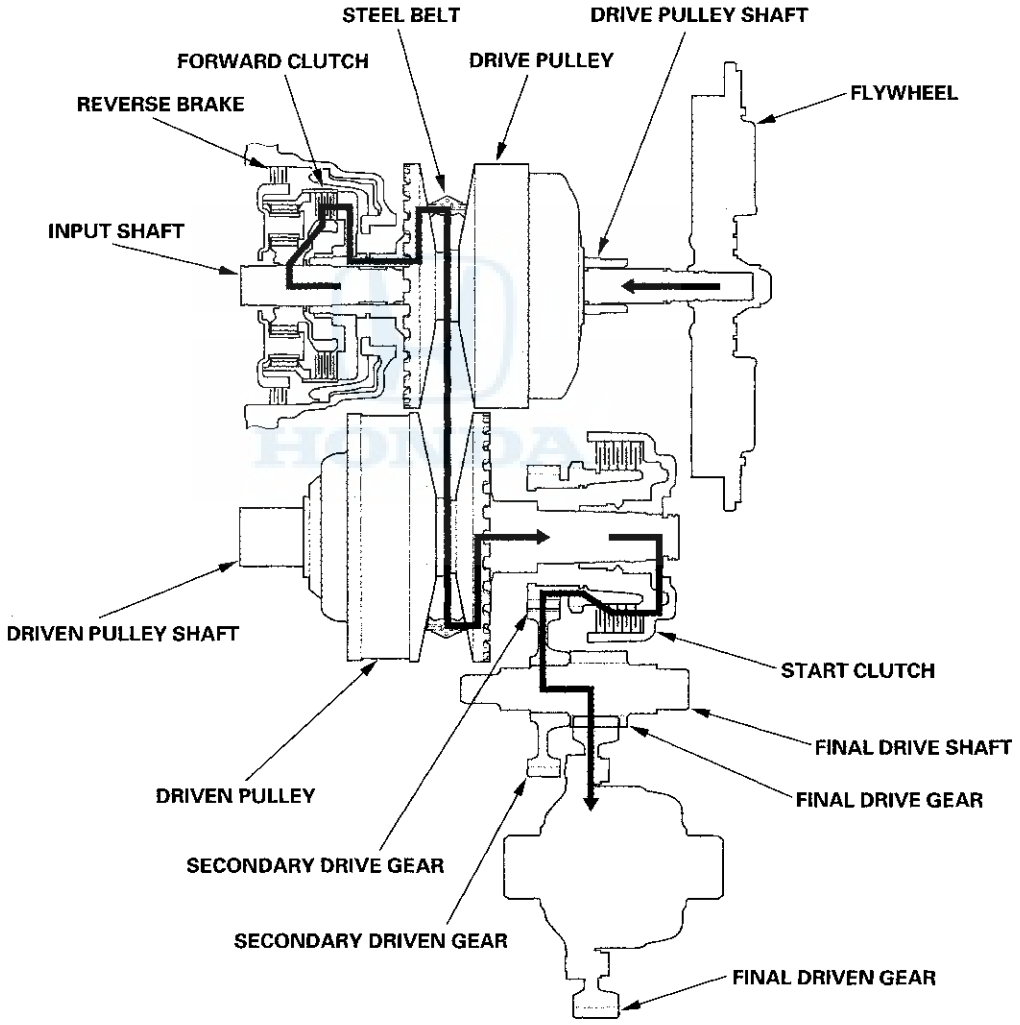

Reverse Range; R position

- Forward clutch: released
- Reverse brake: engaged
- Start clutch: engaged
- Hydraulic pressure is applied to the reverse brake and the start clutch, and the planetary carrier locks with the reverse brake.
- The sun gear drives the pinion gears to rotate, and the pinion gears drive the ring gear in the opposite direction from the rotational direction of the sun gear.
- The ring gear drives the drive pulley shaft via the forward clutch drum, and the drive pulley shaft drives the driven pulley shaft linked by the steel belt.
- The driven pulley shaft drives the secondary drive gear via the start clutch.
- Power is transmitted to the secondary driven gear and the final drive gear, which in turn drives the final driven gear.

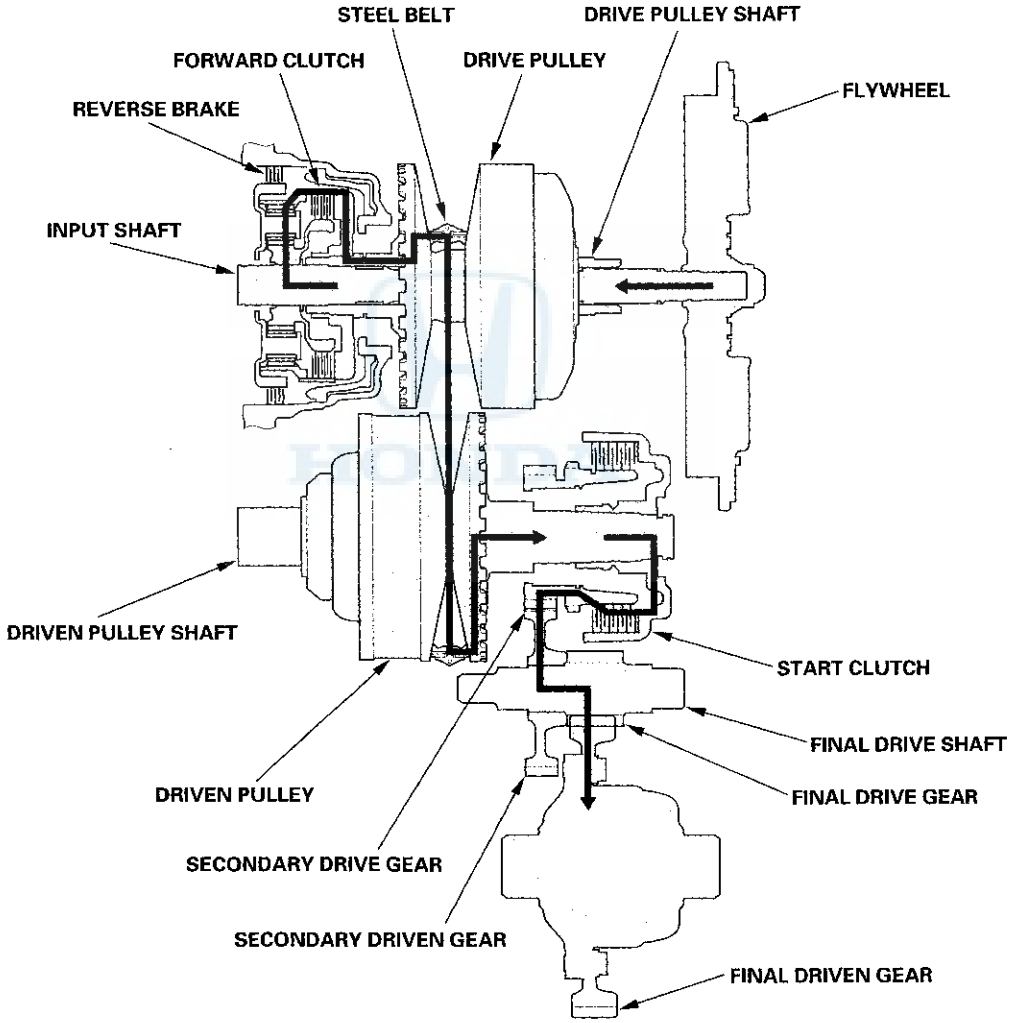

System Description (cont'd)

Electronic Control System

Electronic Control
The electronic control system consists of the powertrain control module (PCM), sensors, switches, and solenoid valves. Shifting is electronically controlled for comfortable driving under all conditions.

The PCM receives input signals from the sensors, switches, and other control units, processes data, and outputs signals for the engine control system and the CVT control system. The CVT control system includes shift control, pulley pressure control, start clutch pressure control, and reverse inhibitor control. The PCM actuates the pulley control solenoids to control pulley control valves A and B shifting transmission pulley ratios.

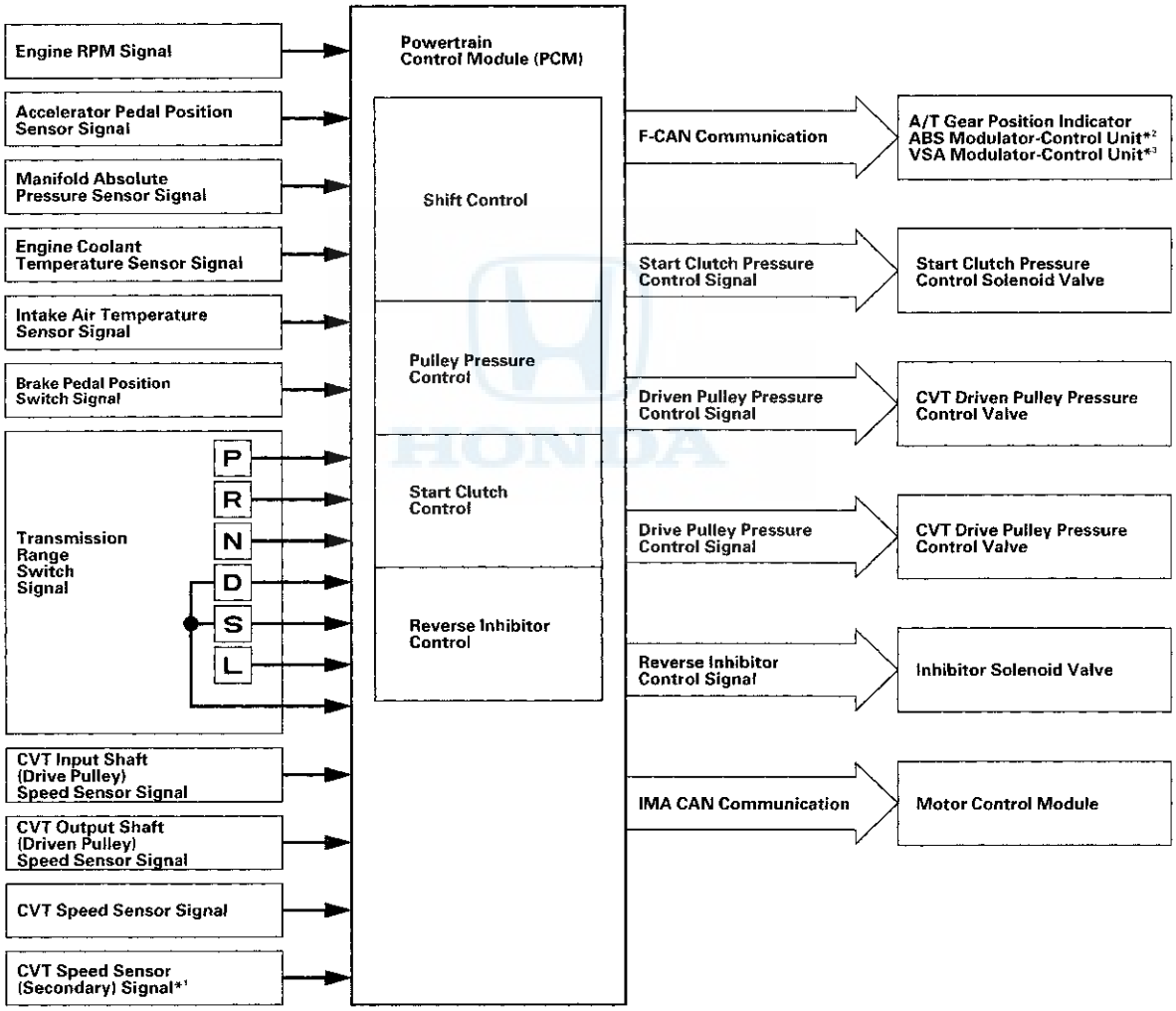

*1: '06 model
*2: ABS model
*3: VSA model

Pulley Pressure Control/Shift Control

To reduce belt slippage and increase belt life, the PCM calculates signals from the sensors and switches, and actuates the pulley pressure control solenoid valves to maintain optimum pulley pressure. When the pulley ratio is low (low vehicle speed), high hydraulic pressure works on the movable face of the driven pulley and reduces the effective diameter of the driven pulley, and a lower hydraulic pressure works on the movable face of the drive pulley to eliminate the steel belt slippage. When the pulley ratio is high (high vehicle speed), high hydraulic pressure works on the movable face of the drive pulley and reduces the effective diameter of the drive pulley, and a lower hydraulic pressure works on the movable face of the driven pulley to eliminate the steel belt slippage.

The PCM compares actual driving conditions with programmed driving conditions to control shifting, and it instantly determines a drive pulley ratio from various signals sent from sensors and switches. The PCM activates the CVT drive pulley pressure control valve to control pulley pressure to the pulleys. The drive pulley drives the driven pulley via a steel belt at varying ratios ranging from 2.526 to 0.421 in D.

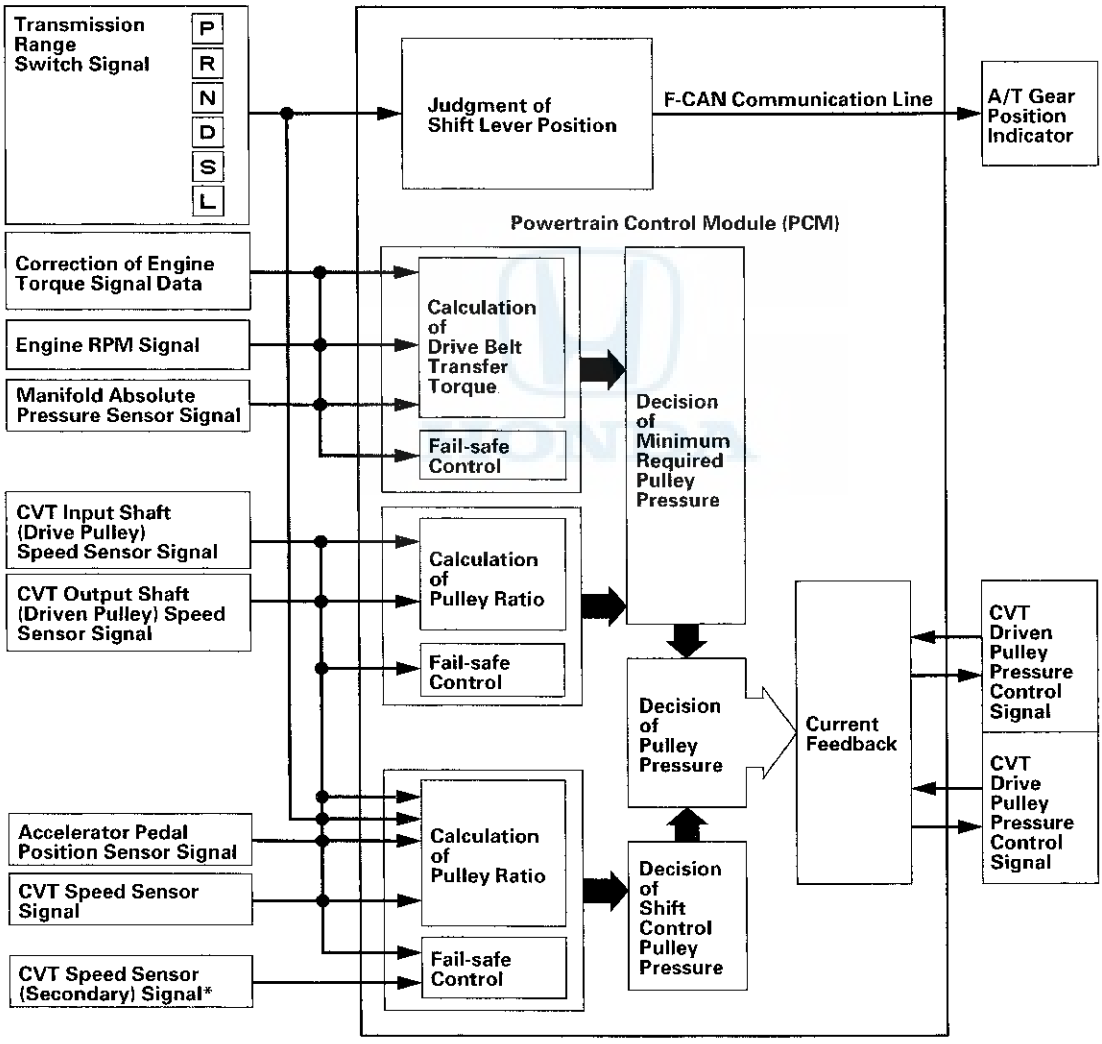

*: '06 model

(cont'd)

System Description (cont'd)

Electronic Control System (cont'd)

Start Clutch Pressure Control

The hydraulic-controlled start clutch controls smooth starting-off and creeping in D, S, L, and R like a torque converter. The PCM inputs signals from the sensors, and switches, and actuates the start clutch pressure control valve to regulate the clutch reducing pressure, and the clutch reducing pressure controls the start clutch.

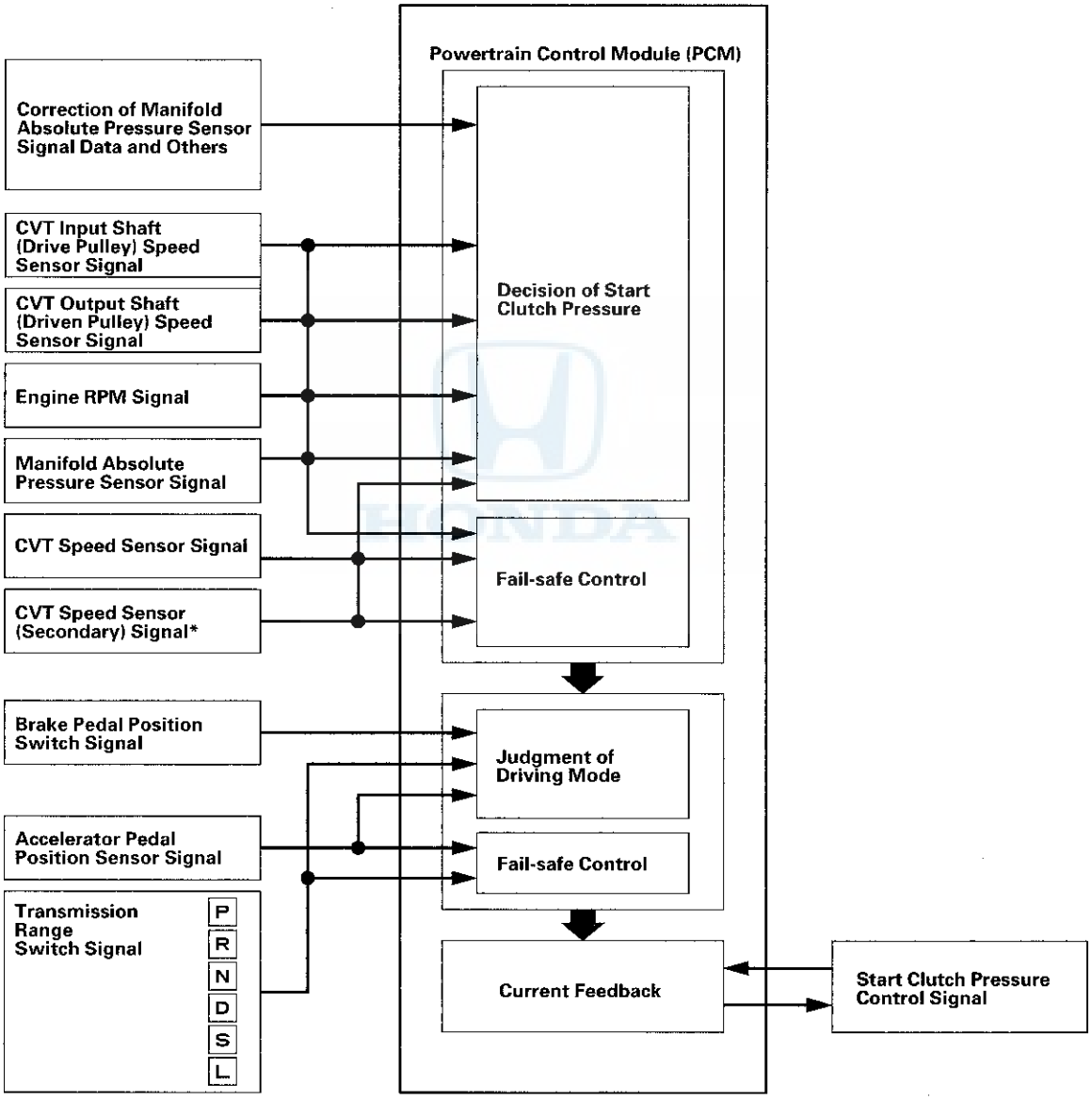

*: '06 model

PCM CVT Control System Electrical Connections ('06 Model)

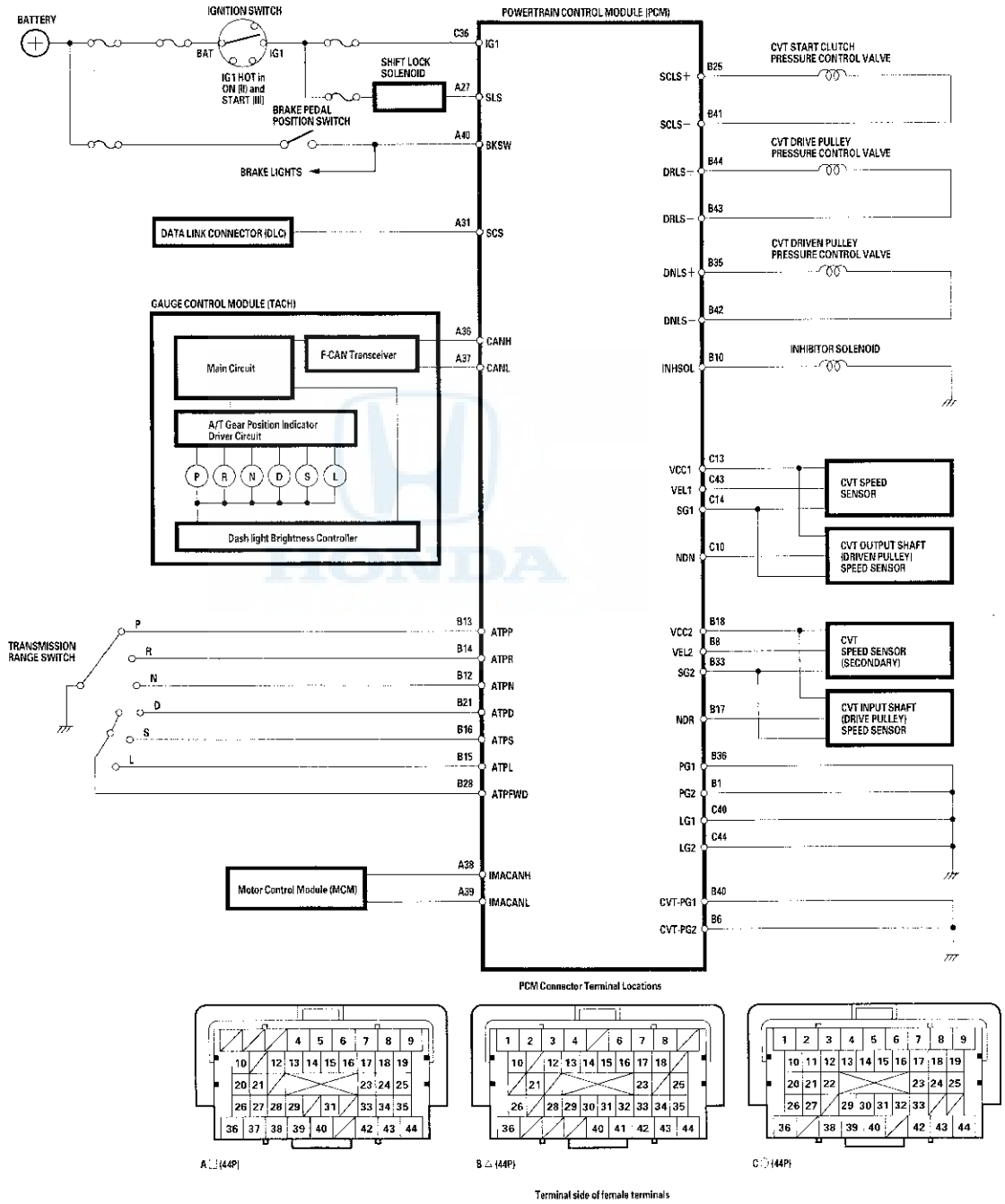

(cont'd)

System Description (cont'd)

Electronic Control System (cont'd)

PCM CVT Control System Electrical Connections ('07-09 Models)

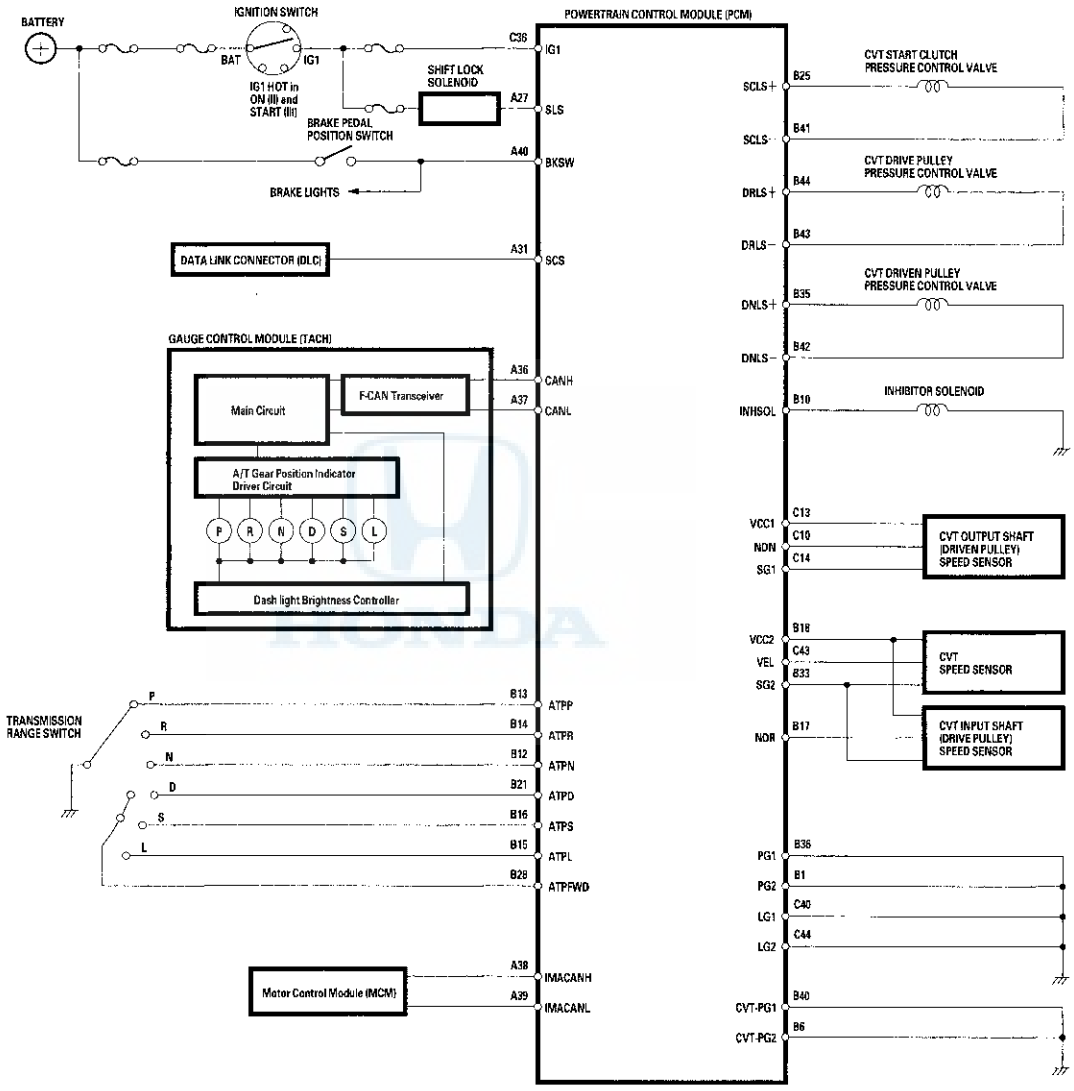

PCM CVT Control System Inputs and Outputs

PCM Connector Terminal Locations

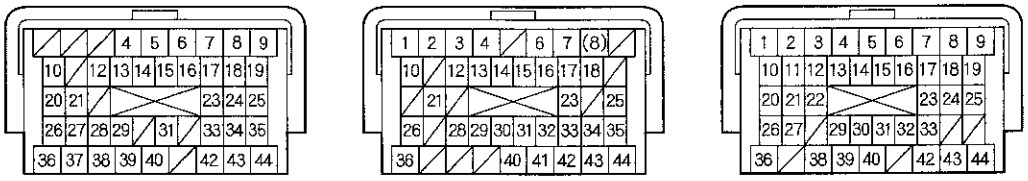

A □ (44P) **B △ (44P)** **C ○ (44P)**

Terminal side of female terminals

NOTE: Standard battery voltage is about 12 V.

PCM CONNECTOR A □ (44P)

Terminal Number	Wire Color	Terminal Name	Description	Signal
A27	PNK	SLS (SHIFT LOCK SOLENOID)	Drives shift lock solenoid	With ignition switch ON (II), in P, brake pedal pressed, and accelerator released: battery voltage
A31	BRN	SCS (SERVICE CHECK SIGNAL)	Detects service check signal	With service check signal shorted using the HDS: about 0 V With service check signal opened: about 5.0 V
A36	WHT	CANH (CAN COMMUNICATION SIGNAL HIGH)	Sends and receives communication signal	With ignition switch ON (II): about 2.5 V (pulses)
A37	RED	CANL (CAN COMMUNICATION SIGNAL LOW)	Sends and receives communication signal	With ignition switch ON (II): about 2.5 V (pulses)
A38	WHT	IMACANH (IMA CAN COMMUNICATION SIGNAL HIGH)	Detects communication signal to BCM module, MCM, and A/C compressor driver	With ignition switch ON (II): about 2.5 V (pulses)
A39	RED	IMACANL (IMA CAN COMMUNICATION SIGNAL LOW)	Detects communication signal to BCM module, MCM, and A/C compressor driver	With ignition switch ON (II): about 2.5 V (pulses)
A40	LT GRN	BKSW (BRAKE PEDAL POSITION SWITCH)	Detects brake pedal position switch signal	With brake pedal pressed: battery voltage With brake pedal released: about 0 V

(cont'd)

System Description (cont'd)

Electronic Control System (cont'd)

PCM CVT Control System Inputs and Outputs (cont'd)

PCM Connector Terminal Locations

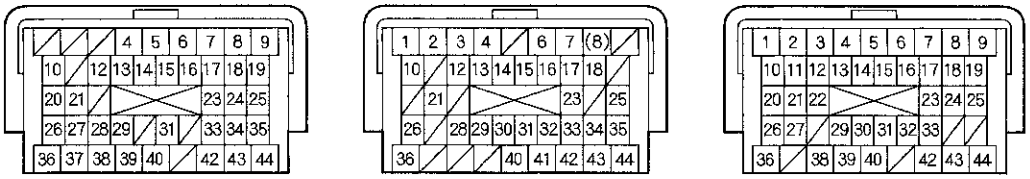

A □ (44P) B △ (44P) C ○ (44P)

Terminal side of female terminals

NOTE: Standard battery voltage is about 12 V.

PCM CONNECTOR B △ (44P)

Terminal Number	Wire Color	Terminal Name	Description	Signal
B1	BRN	PG2 (POWER GROUND)	Ground circuit for PCM circuit	Less than 1.0 V at all times
B6	BLK	CVT-PG2 (CVT POWER GROUND)	Ground circuit for PCM CVT control circuit	Less than 1.0 V at all times
B8*1	WHT/BLK	VEL2 (CVT SPEED SENSOR (SECONDARY))	Detects CVT speed sensor (secondary) signal	With ignition switch ON (II): about 0 V or about 5.0 V With vehicle moving: about 2.5 V (pulses)
B10	GRN/BLK	INHSOL (INHIBITOR SOLENOID VALVE)	Drives inhibitor solenoid valve	With engine running in P, N, D, S, and L: battery voltage With engine running in R: about 0 V
B12	BLK/RED	ATPN (TRANSMISSION RANGE SWITCH N)	Detects transmission range switch N position signal	In N: about 0 V In any position other than N: more than 5.0 V
B13	BLU/BLK	ATPP (TRANSMISSION RANGE SWITCH P)	Detects transmission range switch P position signal	In P: about 0 V In any position other than P: more than 5.0 V
B14	WHT	ATPR (TRANSMISSION RANGE SWITCH R)	Detects transmission range switch R position signal	In R: about 0 V In any position other than R: more than 5.0 V
B15	BLU	ATPL (TRANSMISSION RANGE SWITCH L)	Detects transmission range switch L position signal	In L: about 0 V In any position other than L: battery voltage
B16	BLU/WHT	ATPS (TRANSMISSION RANGE SWITCH S)	Detects transmission range switch S position signal	In S: about 0 V In any position other than S: battery voltage
B17	RED/BLU	NDR (CVT INPUT SHAFT (DRIVE PULLEY) SPEED SENSOR)	Detects CVT input shaft (drive pulley) speed sensor signal	With ignition switch ON (II): about 0 V or about 5.0 V With engine idling in N: about 2.5 V (pulses)

* 1: '06 model

PCM CONNECTOR B △ (44P)

Terminal Number	Wire Color	Terminal Name	Description	Signal
B18	YEL/BLU	VCC2 (SENSOR VOLTAGE)	Provides sensor reference voltage	With ignition switch ON (II): about 5.0 V
B21	PNK	ATPD (TRANSMISSION RANGE SWITCH D)	Detects transmission range switch D position signal input	In D: about 0 V In any position other than D: battery voltage
B25	YEL	SCLS+ (CVT START CLUTCH PRESSURE CONTROL VALVE +SIDE)	Drives CVT start clutch pressure control valve	With ignition switch ON (II): pulses
B28	RED	ATPFWD (TRANSMISSION RANGE SWITCH FWD)	Detects transmission range switch D, S, and L positions signal	In D, S, and L: about 0 V In any position other than D, S, and L: battery voltage
B33	GRN/YEL	SG2 (SENSOR GROUND)	Sensor ground	Less than 1.0 V at all times
B35	GRN/WHT	DNLS+ (CVT DRIVEN PULLEY PRESSURE CONTROL VALVE +SIDE)	Drives CVT driven pulley pressure control valve	With ignition switch ON (II): pulses
B36	BLK	PG1 (POWER GROUND)	Ground circuit for PCM circuit	Less than 1.0 V at all times
B40	BLK	CVT-PG1 (CVT POWER GROUND)	Ground circuit for PCM CVT control circuit	Less than 1.0 V at all times
B41	PNK/BLU	SCLS− (CVT START CLUTCH PRESSURE CONTROL VALVE −SIDE)	Ground for CVT start clutch pressure control valve	With ignition switch ON (II): about 4.5 V (between SCLS+ terminal and SCLS− terminal)
B42	PNK/BLK	DNLS− (CVT DRIVEN PULLEY PRESSURE CONTROL VALVE −SIDE)	Ground for CVT driven pulley pressure control valve	With ignition switch ON (II): about 4.5 V (between DNLS+ terminal and DNLS− terminal)
B43	GRN/YEL	DRLS− (CVT DRIVE PULLEY PRESSURE CONTROL VALVE −SIDE)	Ground for CVT drive pulley pressure control valve	With ignition switch ON (II): about 4.5 V (between DRLS+ terminal and DRLS− terminal)
B44	BLU/WHT	DRLS+ (CVT DRIVE PULLEY PRESSURE CONTROL VALVE +SIDE)	Drives CVT drive pulley pressure control valve	With ignition switch ON (II): pulses

(cont'd)

System Description (cont'd)

Electronic Control System (cont'd)

PCM CVT Control System Inputs and Outputs (cont'd)

PCM Connector Terminal Locations

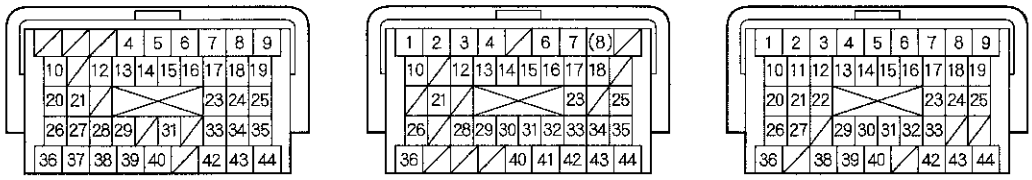

A □ (44P) B △ (44P) C ○ (44P)

Terminal side of female terminals

NOTE: Standard battery voltage is about 12 V.

PCM CONNECTOR C ○ (44P)

Terminal Number	Wire Color	Terminal Name	Description	Signal
C10	WHT	NDN (CVT OUTPUT SHAFT (DRIVEN PULLEY) SPEED SENSOR)	Detects CVT output shaft (driven pulley) speed sensor signal	With ignition switch ON (II): about 0 V or about 5.0 V With engine idling in N: about 2.5 V (pulses)
C11	GRN/RED	MAP (MANIFOLD ABSOLUTE PRESSURE (MAP) SENSOR)	Detects MAP sensor signal	With ignition switch ON (II): about 3.0 V At idle: about 1.0 V depending on engine speed
C13	YEL/RED	VCC1 (SENSOR VOLTAGE)	Provides sensor reference voltage	With ignition switch ON (II): about 5.0 V
C14	GRN/WHT	SG1 (SENSOR GROUND)	Sensor ground	Less than 1.0 V at all times
C32	BLU	CKP (CRANKSHAFT POSITION (CKP) SENSOR)	Detects CKP sensor signal	With engine running: pulses
C36	BLK/YEL	IG1 (IGNITION SIGNAL)	Detects ignition signal	With ignition switch ON (II): battery voltage
C40	BRN/YEL	LG1 (LOGIC GROUND)	Ground circuit for PCM circuit	Less than 1.0 V at all times
C43	WHT/RED	VEL1 (CVT SPEED SENSOR) *1 VEL (CVT SPEED SENSOR) *2	Detects CVT speed sensor signal	With ignition switch ON (II): about 0 V or about 5.0 V With vehicle moving: about 2.5 V (pulses)
C44	BRN/YEL	LG2 (LOGIC GROUND)	Ground circuit for PCM circuit	Less than 1.0 V at all times

* 1: '06 model
* 2: '07-09 models

Self-diagnosis
If the PCM detects the failure of a signal from a sensor, a switch, a solenoid valve, or from another control unit, it stores a Temporary DTC or a DTC. Depending on the failure, a DTC is stored in either the first or the second drive cycle. When a DTC is stored, the PCM blinks the D indicator and/or turns on the malfunction indicator lamp (MIL) by a signal sent to the gauge control module via F-CAN.

- **One Drive Cycle Detection Method**
  When an abnormality occurs in the signal from a sensor, a switch, a solenoid valve, or from another control unit, the PCM stores a DTC for the failure and blinks the D indicator and/or turns on the MIL immediately.

- **Two Drive Cycle Detection Method**
  When an abnormality occurs in the signal from a sensor, a switch, a solenoid valve, or from another control unit in the first drive cycle, the PCM stores a Temporary DTC. The D indicator and the MIL do not turns on at this time. If the failure continues in the second drive cycle, the PCM stores a DTC and blinks the D indicator and/or turns on the MIL.

Fail-safe Function
When an abnormality occurs in the signal from a sensor, a switch, a solenoid valve, or from another control unit, the PCM ignores that signal and substitutes a pre-programmed value for them that allow the automatic transmission to continue driving. This causes a DTC to be stored and the D indicator to blink and/or the MIL to come on.

HONDA

System Description (cont'd)

Hydraulic Control

The hydraulic control system is controlled by the ATF pump, the valves, and the solenoid valves. The ATF pump is driven by the input shaft. The ATF pump and the input shaft are linked by the ATF pump drive chain and the sprockets. Fluid from the ATF pump flows through the pressure high (PH) regulator valve to maintain specified pressure to the drive pulley, the driven pulley, and the manual valve.
The lower valve body assembly includes the main valve body, the secondary valve body, the CVT driven pulley pressure control valve, the CVT start clutch pressure control valve, and the CVT drive pulley pressure control valve.

The manual valve body is bolted on the intermediate housing, and houses the manual valve which switches hydraulic pressure to meet with the shift lever position.

Main Valve Body
The main valve body contains the start clutch shift valve, the shift inhibitor valve, the lubrication regulator valve, and the cooler relief valve.

- Start Clutch Shift Valve
  When a control system malfunction occurs, the start clutch shift valve receives shift inhibitor pressure (SI) and covers the lubrication pressure bypass circuit port.
- Shift Inhibitor Valve
  The shift inhibitor valve switches the fluid passage to switch the start clutch control from electronic control to hydraulic control when the electronic control system is faulty.
- Lubrication Regulator Valve
  The lubrication regulator valve stabilizes the lubrication pressure to the internal circuit.
- Cooler Relief Valve
  The cooler relief valve stabilizes the ATF cooler pressure and recirculation pressure to the ATF cooler and to the internal circuit.

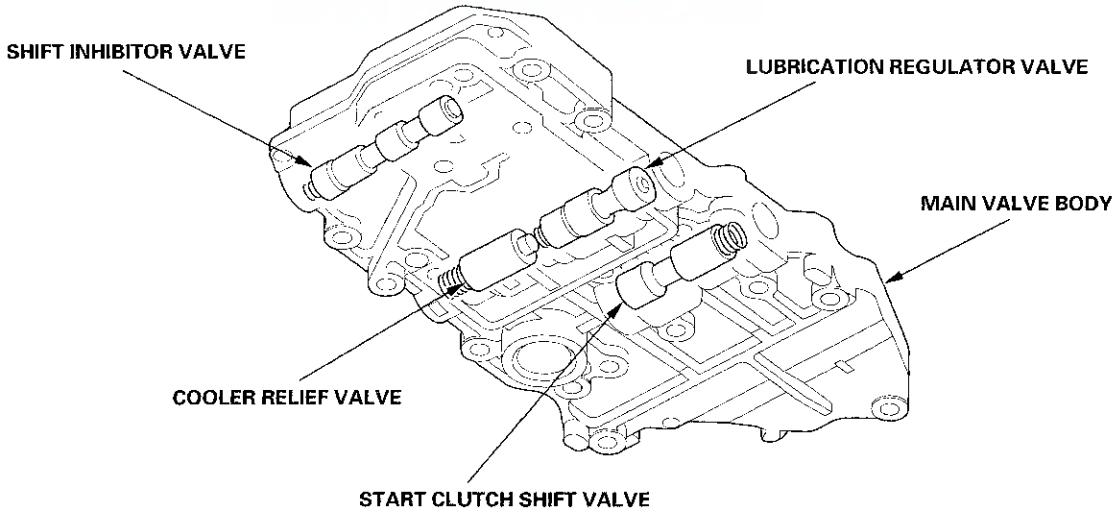

Secondary Valve Body
The secondary valve body contains the pressure high (PH) regulator valve, the pressure high control (PHC) shift valve, the start clutch back-up valve, the clutch reducing valve, and the start clutch accumulator valve.

- PH Regulator Valve
  The PH regulator valve maintains hydraulic pressure supplied from the ATF pump, and supplies PH pressure to the hydraulic control circuit and the lubrication circuit. PH pressure is regulated at the PH regulator valve by the PH control pressure (PHC) from PHC shift valve.
- PHC Shift Valve
  The PHC shift valve supplies PH control pressure (PHC) to the PH regulator valve to regulate PH pressure in accordance with the drive pulley control pressure (DRC) or driven pulley pressure (DNC).
- Start Clutch Back-up Valve
  When a control system malfunction occurs, the start clutch back-up valve supplies start clutch control B pressure (CCB) based on shift inhibitor pressure (SI) to the start clutch.
- Clutch Reducing Valve
  The clutch reducing valve receives PH pressure from the PH regulator valve and regulates clutch reducing pressure (CR).
- Start Clutch Accumulator Valve
  The start clutch accumulator valve stabilizes the hydraulic pressure that is supplied to the start clutch.

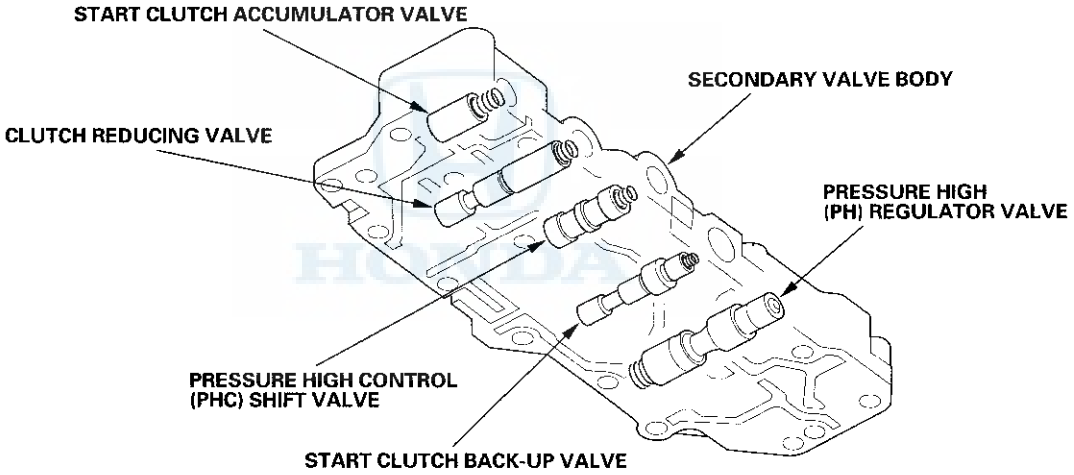

(cont'd)

System Description (cont'd)

Hydraulic Control (cont'd)

CVT Driven Pulley Pressure Control Valve
The CVT driven pulley pressure control valve contains the driven pulley control valve with the solenoid and pulley control valve A. The driven pulley control valve controls pulley control valve A's position, which applies driven pulley pressure (DN) to the driven pulley.

CVT Drive Pulley Pressure Control Valve
The CVT drive pulley pressure control valve contains the drive pulley control valve with the solenoid and pulley control valve B. The drive pulley control valve controls the position of pulley control valve B which applies drive pulley pressure (DR) to the drive pulley. The combination of the CVT driven pulley pressure control valve and the CVT drive pulley pressure control valve, applies pulley control pressures to the respective pulleys creating complete power transfer, eliminating steel belt slippage and increasing belt life.

CVT Start Clutch Pressure Control Valve
The CVT start clutch pressure control valve consists of the start clutch pressure control valve and the solenoid. The CVT start clutch pressure control valve controls start clutch engagement according to the throttle opening.

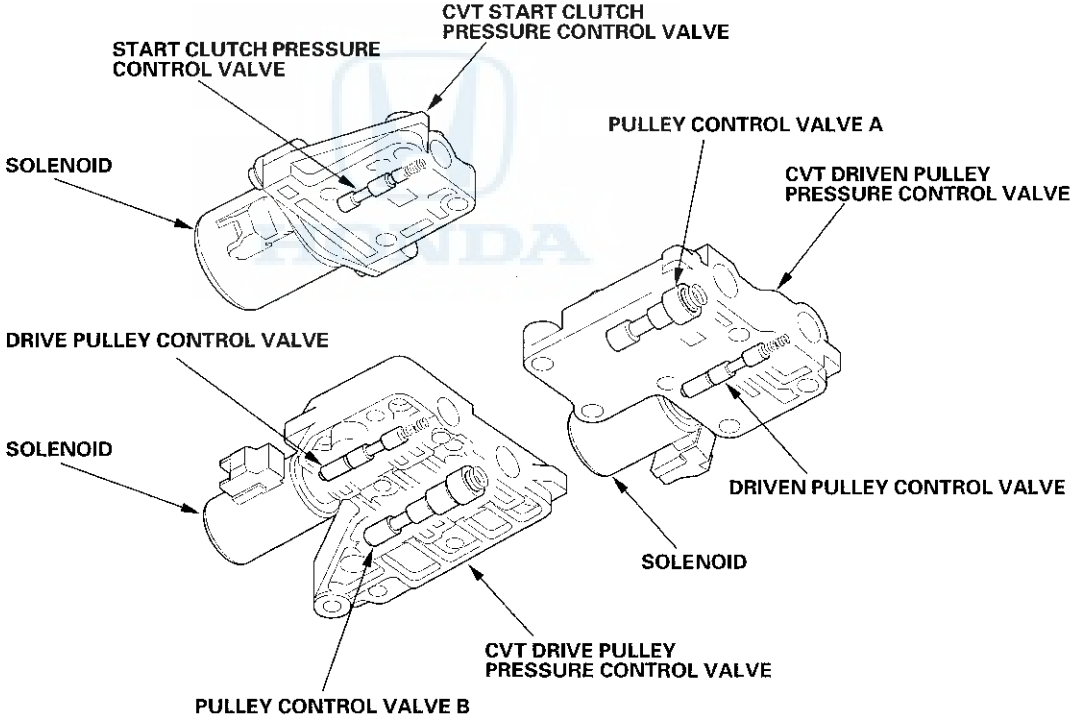

Manual Valve Body
The manual valve body contains the manual valve and the reverse inhibitor valve. The manual valve body is bolted on the intermediate housing.

- Manual Valve
  The manual valve mechanically uncovers/covers the fluid passage according to the shift lever position.
- Reverse Inhibitor Valve
  The reverse inhibitor valve is controlled by reverse inhibitor (RI) pressure from the reverse inhibitor solenoid. The reverse inhibitor valve intercepts the hydraulic pressure flowing to the reverse brake while the vehicle is moving forward at speeds over about 6 mph (10 km/h).

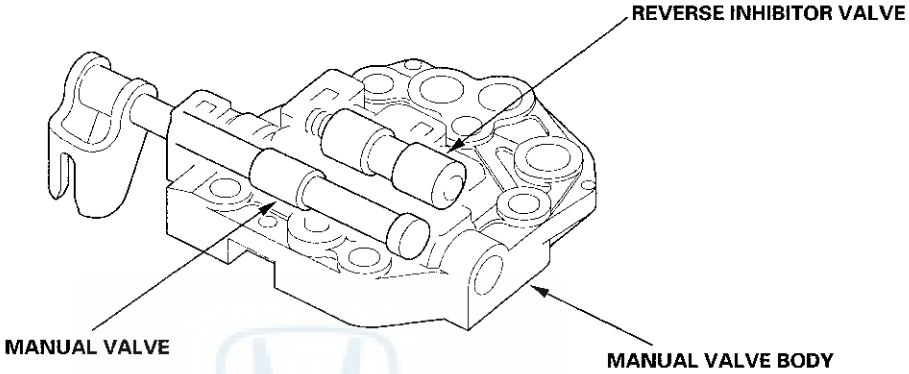

HONDA

System Description (cont'd)

Hydraulic Flow

As the engine turns, the ATF pump starts to operate. Transmission fluid (CVTF) is drawn through the ATF strainer (filter) and discharged into the hydraulic circuit. Then, CVTF flowing from the ATF pump flows to the pressure high (PH) regulator valve and becomes pressure high (PH) pressure. PH pressure flows to the pulley control valves and then to the pulleys.
The PCM actuates the solenoid valves to control hydraulic pressure shifting pulley ratio and engaging the start clutch.

Hydraulic Pressure Flow Circuit Diagram

Port No.	Hydraulic Pressure	Port No.	Hydraulic Pressure
CC	Start Clutch Control	LUB'	Lubrication
CCB	Start Clutch Control B	PH	Pressure High
COL	ATF Cooler	PHC	Pressure High Control
CR	Clutch Reducing	RCC	Recirculation
DN	Driven Pulley	RI	Reverse Inhibitor
DNC	Driven Pulley Control	RVS	Reverse Brake
DR	Drive Pulley	RVS'	Reverse Brake
DRC	Drive Pulley Control	SC	Start Clutch
FWD	Forward Clutch	SI	Shift Inhibitor
LUB	Lubrication	X	Drain

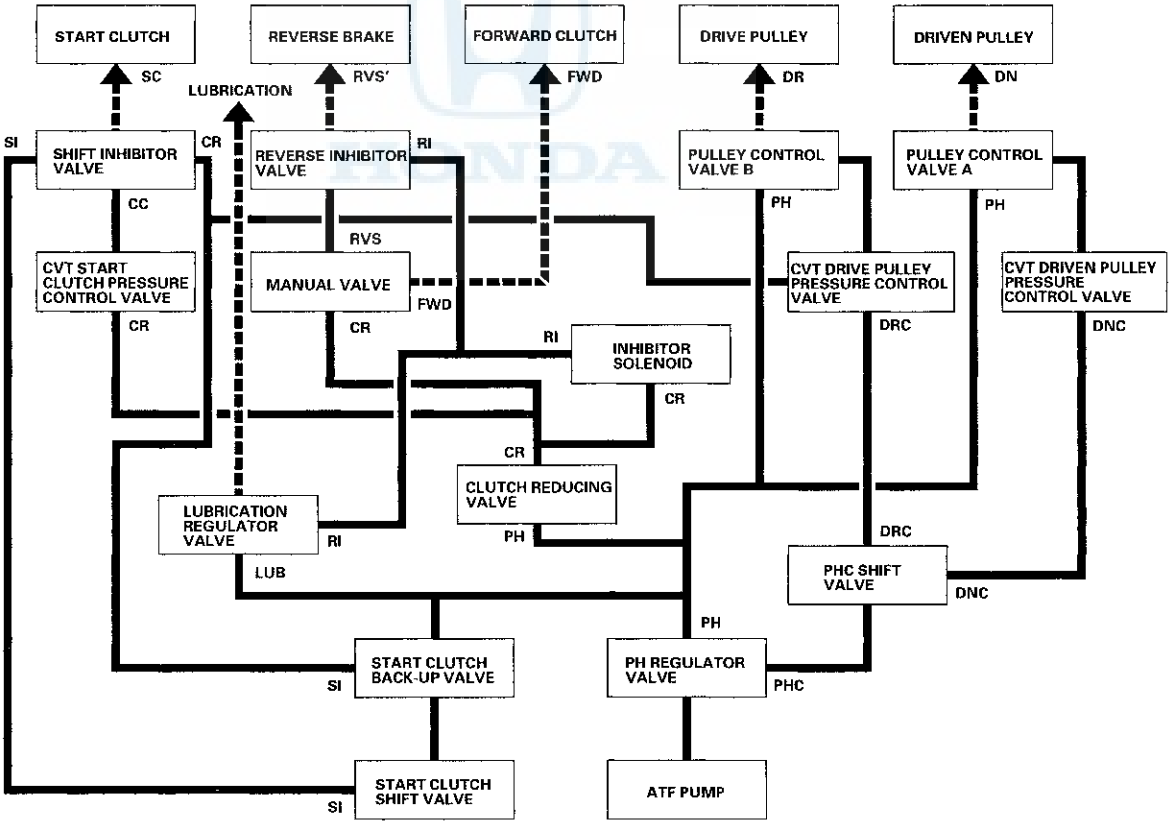

N Position

Fluid from the ATF pump is regulated to high pressure at the pressure high (PH) regulator valve, and flows to the pulley control valves. The CVT driven pulley pressure control valve and the CVT drive pulley pressure control valve, control valves A and B which applies pressure to the pulleys. The driven pulley receives pressure higher than the pressure the drive pulley receives. Hydraulic pressure to the forward clutch is blocked by the manual valve, and hydraulic pressure to the start clutch is blocked by the CVT start clutch pressure control valve. Under this condition, hydraulic pressure is not applied to the start clutch and the forward clutch.

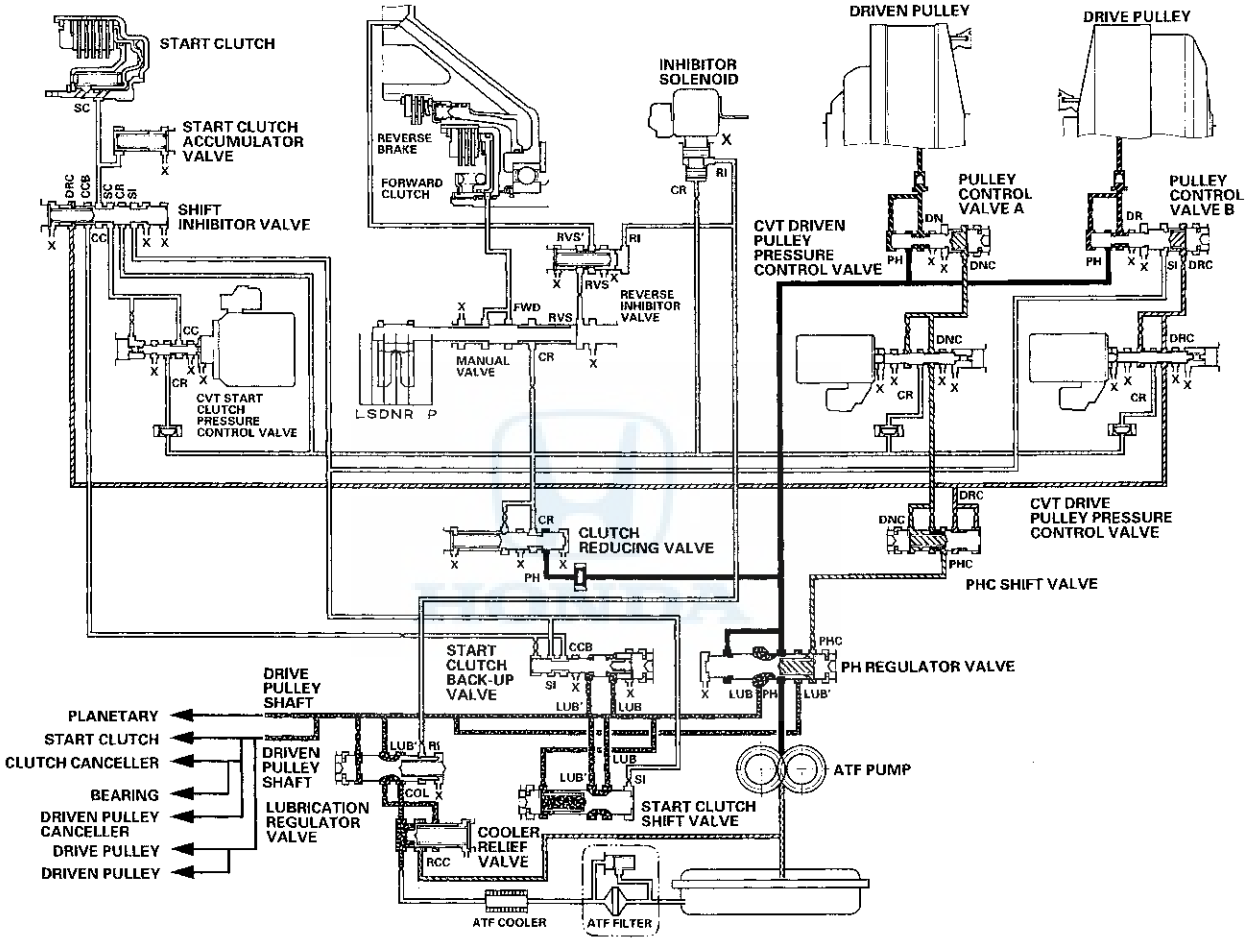

(cont'd)

System Description (cont'd)

Hydraulic Flow (cont'd)

D Position, at low speed range

The manual valve is shifted into the D position, and uncovers the forward clutch pressure (FWD) port leading to the forward clutch. The forward clutch pressure (FWD) flows to the forward clutch, the forward clutch is engaged, and drives the input shaft and the drive pulley shaft. The drive pulley receives low pressure, and the driven pulley receives high pressure. The PCM actuates the CVT start clutch pressure control valve to control start clutch pressure. The start clutch control pressure (CC) from the CVT start clutch pressure control valve becomes start clutch pressure (SC) at the shift inhibitor valve, and flows to the start clutch. The start clutch is engaged, and the vehicle moves.

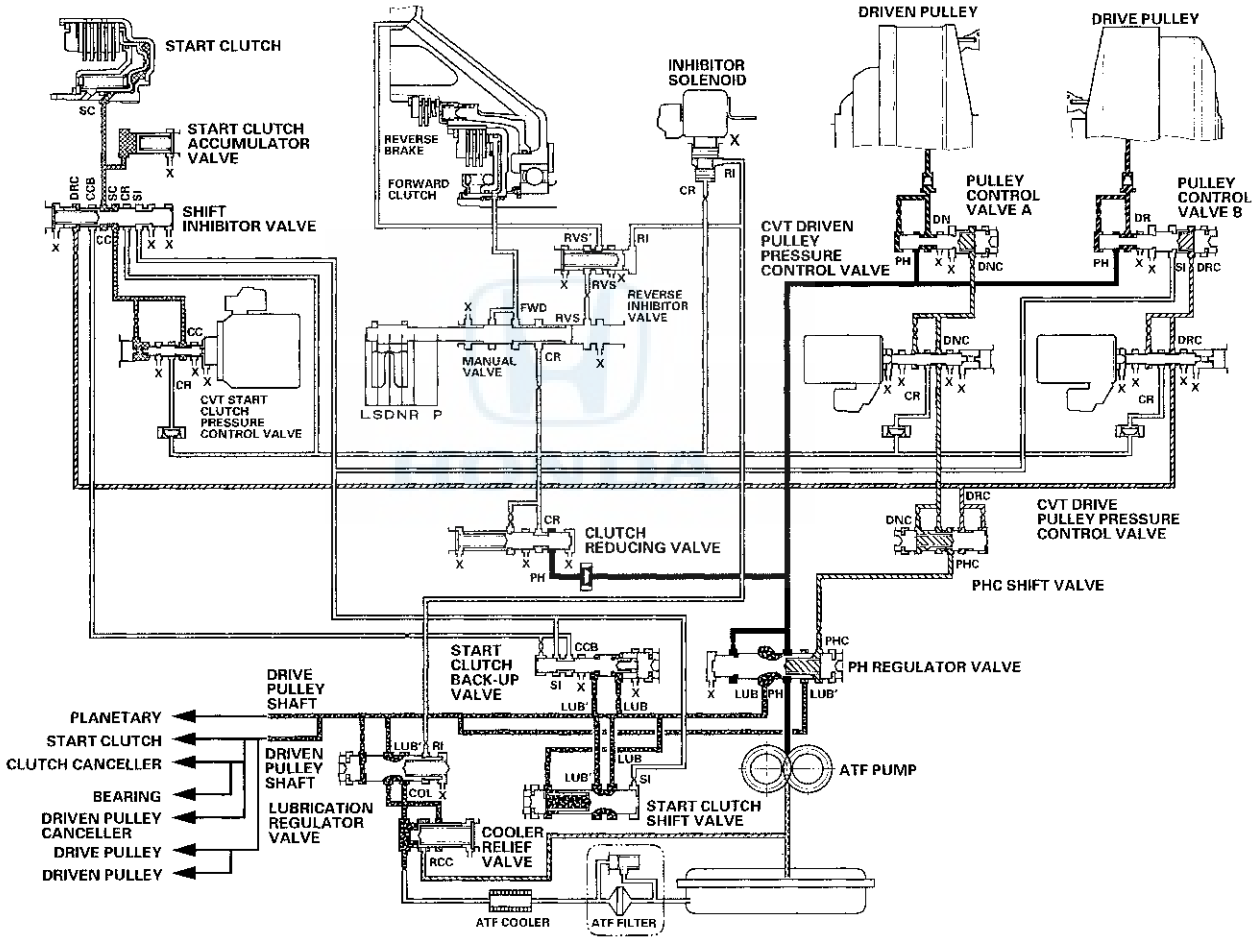

D Position, at high speed range

As the speed of the vehicle reaches the programmed value, the PCM controls the CVT driven pulley pressure control valve and the CVT drive pulley pressure control valve to provide about the same hydraulic pressure to the pulleys. The diameter in contact with the steel belt on the drive pulley and the driven pulley becomes nearly equal, and the pulley ratio is in high. Hydraulic pressure is then applied to the start clutch and the forward clutch.

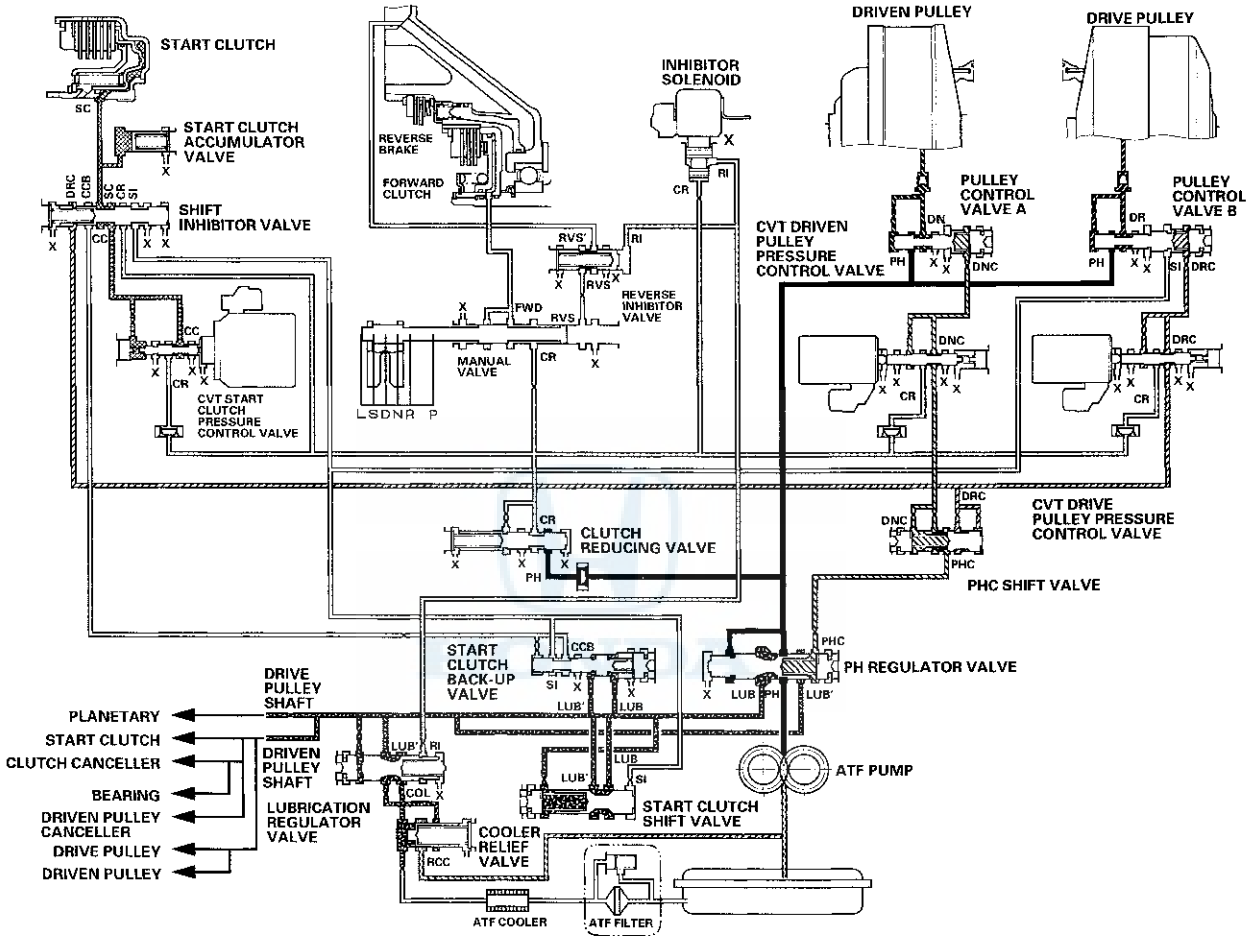

(cont'd)

System Description (cont'd)

Hydraulic Flow (cont'd)

D Position, at top speed range

Vehicle speed is further increased, the PCM controls the CVT driven pulley pressure control valve and the CVT drive pulley pressure control valve to apply hydraulic pressure to the drive pulley and to the driven pulley. The drive pulley receives high pressure and the driven pulley receives low pressure. The drive pulley provides the steel belt a large-diameter contact and the driven pulley provides a small-diameter contact, and the result is a high pulley ratio. Hydraulic pressure remains to apply to the start clutch and the forward clutch.

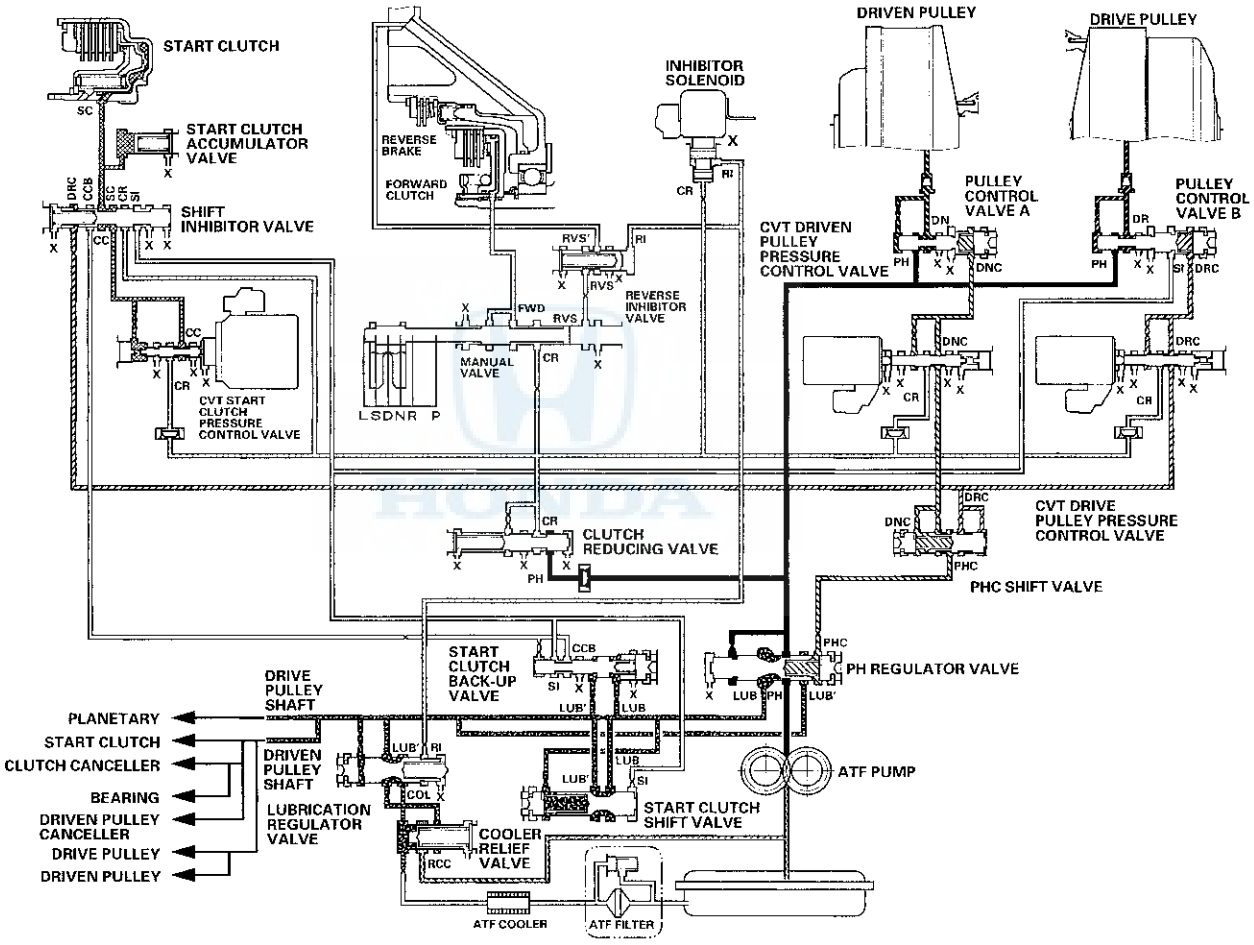

R Position

The manual valve is shifted into the R position, uncovers the reverse brake pressure (RVS) port leading to the reverse inhibitor valve. The reverse inhibitor solenoid is turned OFF by the PCM, and reverse inhibitor pressure (RI) is applied to the right end of the reverse inhibitor valve. The reverse inhibitor valve is moved to the left side, and uncovers the reverse brake pressure (RVS') port leading to the reverse brake. Clutch reducing pressure (CR) becomes reverse brake pressure (RVS), and flows to the reverse brake via the reverse inhibitor valve. The reverse brake is engaged, and it locks the planetary carrier.

NOTE: When used, "left" or "right" indicates direction on the hydraulic circuit.

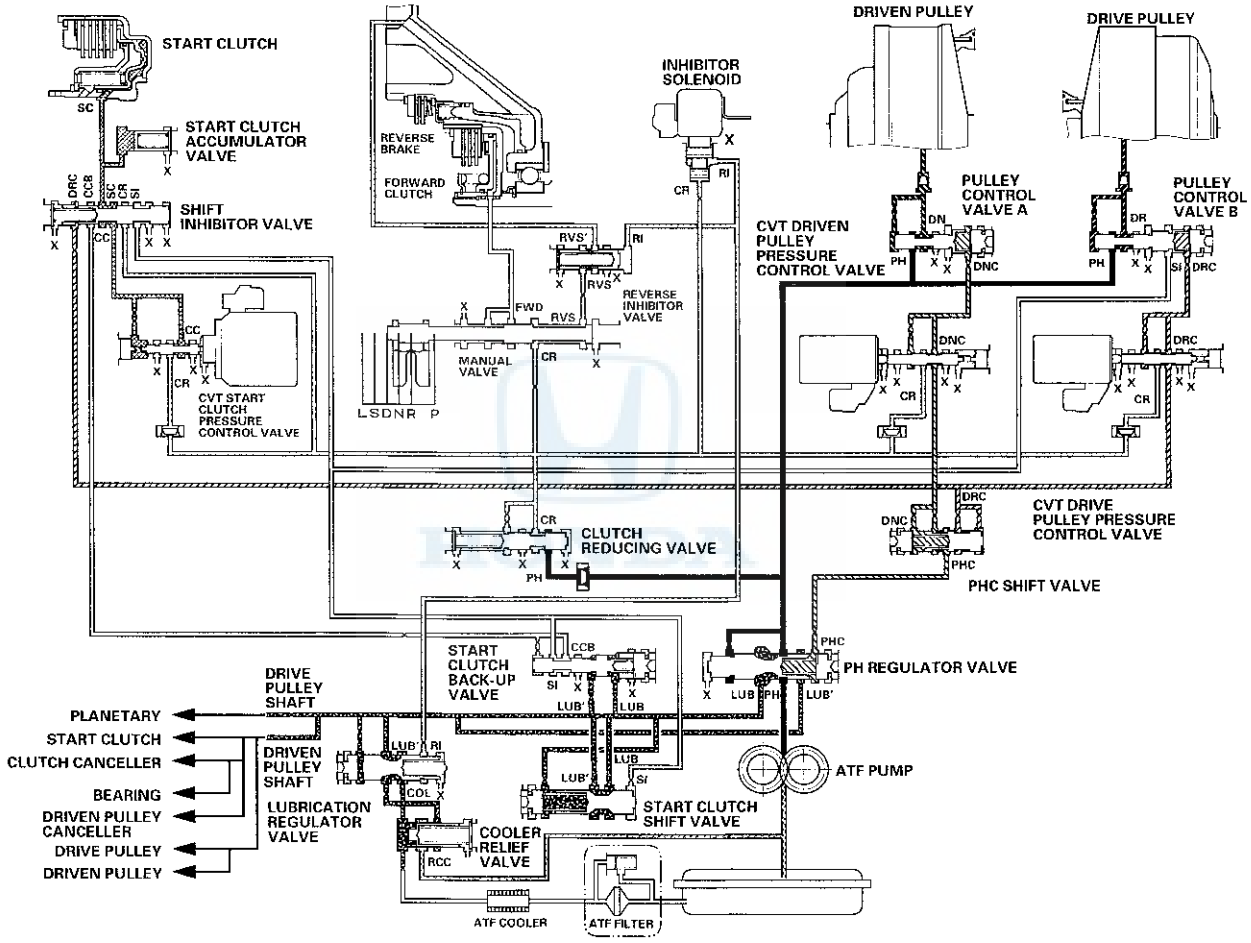

(cont'd)

System Description (cont'd)

Hydraulic Flow (cont'd)

R Position: Reverse Inhibitor Control
If R is selected while the vehicle is moving forward at speeds over 6 mph (10 km/h), the PCM outputs a signal to turn ON the reverse inhibitor solenoid, and reverse inhibitor pressure (RI) in the right end of the reverse inhibitor valve is released. The reverse inhibitor valve is moved to the right side, and uncovers the stop reverse brake pressure port leading to the reverse brake from the manual valve. Reverse brake pressure (RVS) is not applied to the reverse brake, and power is not transmitted to the reverse direction.

NOTE: When used, "left" or "right" indicates direction on the hydraulic circuit.

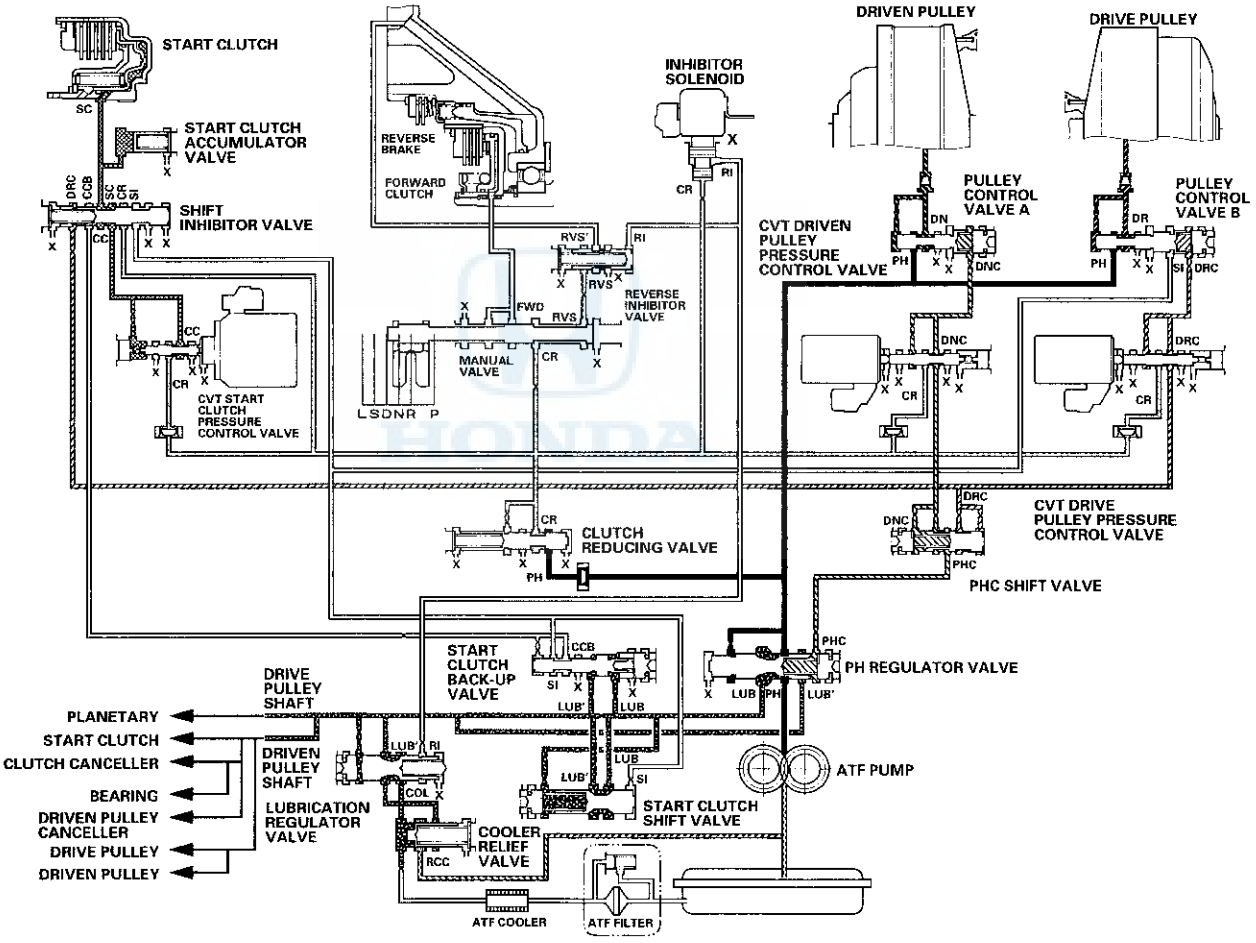

P Position

The manual valve is shifted into the P position, the manual valve blocks hydraulic pressure to the forward clutch. Hydraulic pressure is not applied to the start and forward clutches, and power is not transmitted to the drive pulley shaft.

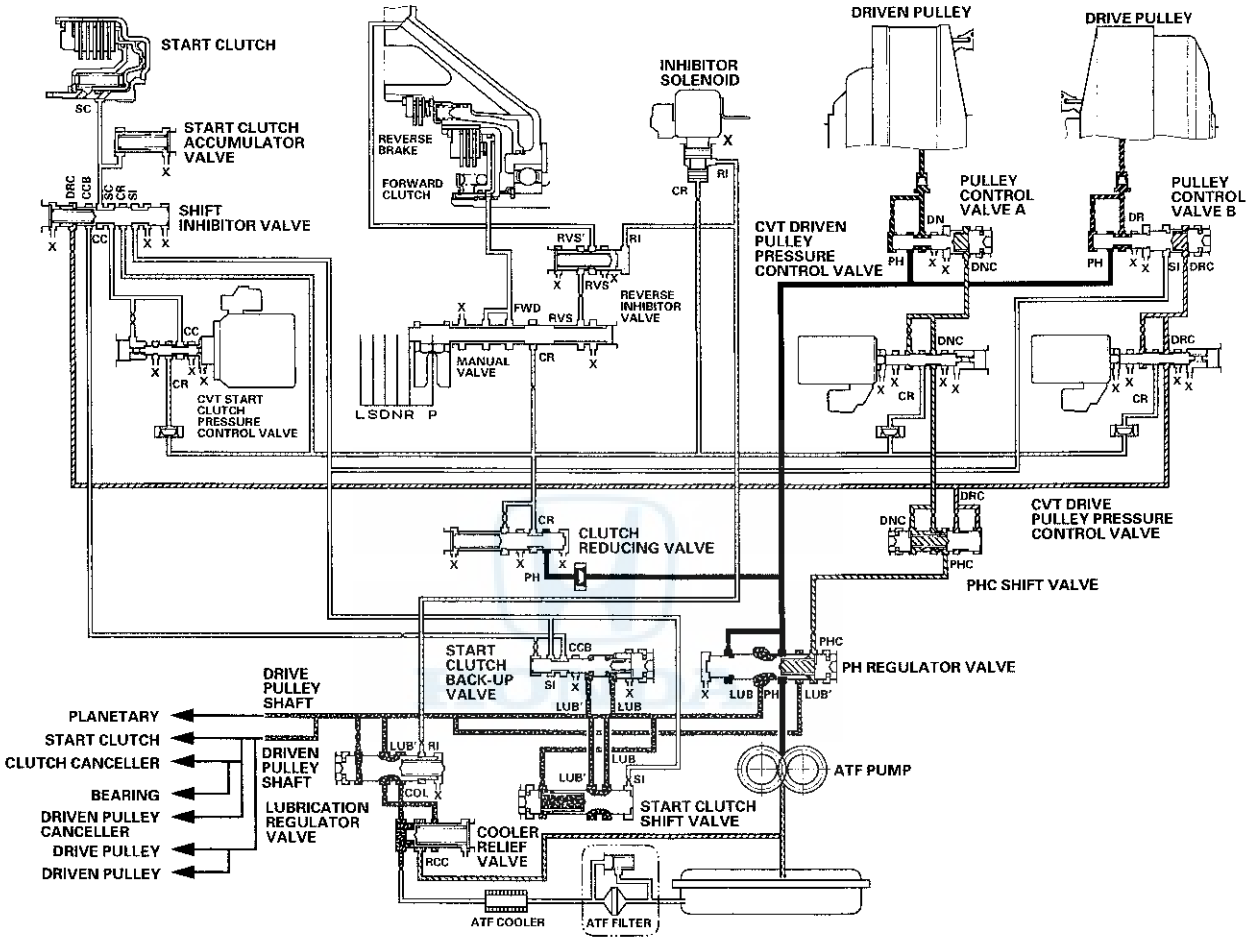

(cont'd)

System Description (cont'd)

Hydraulic Flow (cont'd)

D Position, when an electronic control system malfunction occurs.
When an electronic control system malfunction occurs in D, and the CVT start clutch pressure control valve cannot control the start clutch pressure circuit, the transmission creates a temporary circuit for the start clutch pressure control to allow the vehicle to be driven.
The CVT start clutch control valve covers the start clutch control pressure (CC) port leading to the shift inhibitor valve, and the shift inhibitor valve is moved to the left side by drive pulley control pressure (DRC). Clutch reducing pressure (CR) becomes shift inhibitor pressure (SI) at the shift inhibitor valve. Pressure then flows to the left side of the start clutch back-up valve, and becomes start clutch control B pressure (CCB). Start clutch control B pressure (CCB) becomes start clutch pressure (SC) at the shift inhibitor valve, and flows to the start clutch. Clutch reducing pressure (CR) also flows to the manual valve and becomes forward clutch pressure (FWD). The start clutch and the forward clutch are engaged, and the vehicle can move.

NOTE: When used, "left" or "right" indicates direction on the hydraulic circuit.

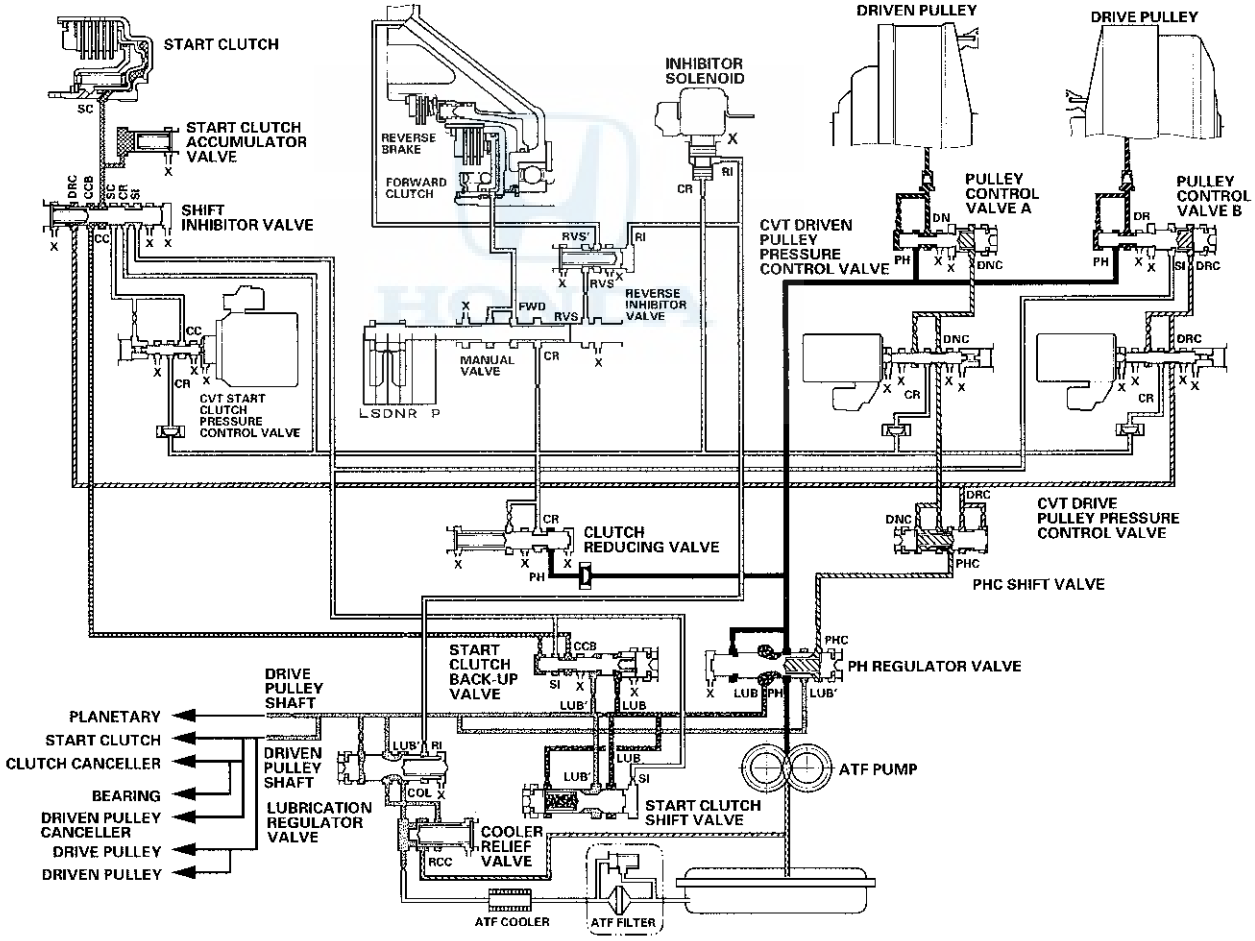

R Position, when an electronic control system malfunction occurs.
When an electronic control system malfunction occurs in R, and the CVT start clutch pressure control valve cannot control the start clutch pressure circuit, the transmission creates the temporary circuit for the start clutch pressure control to allow the vehicle to be driven.
The CVT start clutch control valve covers the start clutch control pressure (CC) port leading to the shift inhibitor valve, and the shift inhibitor valve is moved to the left side by drive pulley control pressure (DRC). Clutch reducing pressure (CR) becomes shift inhibitor pressure (SI) at the shift inhibitor valve. Pressure then flows to the left side of the start clutch back-up valve, and becomes start clutch control B pressure (CCB). Start clutch control B pressure (CCB) becomes start clutch pressure (SC) at the shift inhibitor valve, and flows to the start clutch. Clutch reducing pressure (CR) also flows to the manual valve and becomes reverse brake pressure (RVS). The start clutch and the reverse brake are engaged, and the vehicle can reverse.

NOTE: When used, "left" or "right" indicates direction on the hydraulic circuit.

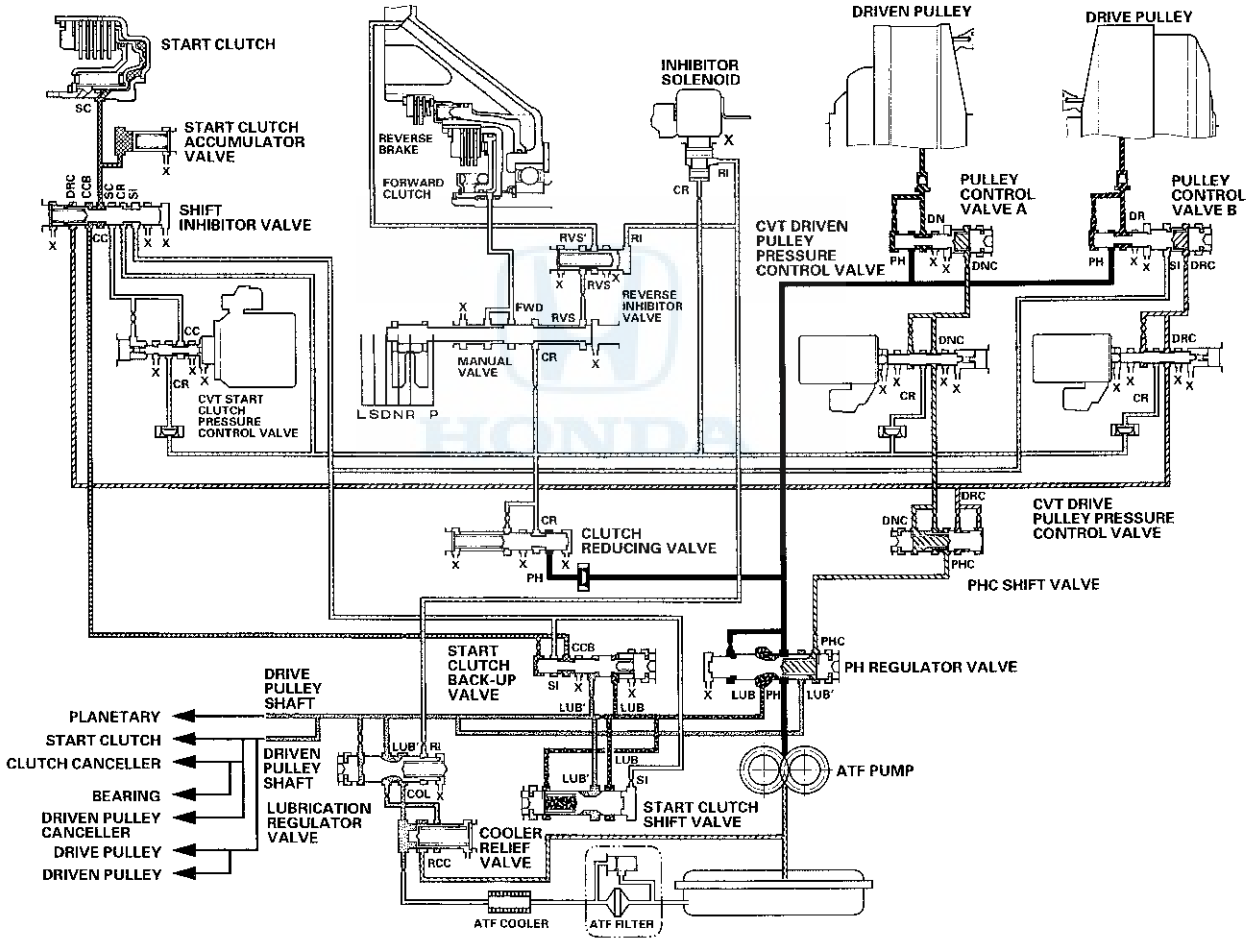

(cont'd)

System Description (cont'd)

Park Mechanism

The park mechanism locks the transmission by engaging the park pawl with the park gear which is integral with the secondary drive gear. The secondary drive gear engages with the secondary driven gear which is splined to the final drive shaft, and the final drive gear integrated with the final drive shaft engages the final driven gear.
Shifting to P causes the park cone (installed at the end of the park rod) to press the park pawl onto the park gear. Even if the end of the park pawl rides on the top of the park gear teeth, slight movement of the vehicle will cause the park pawl and the park gear to mesh with each other completely because the park rod spring puts tension on the park cone. The park pawl receives the tension (which acts to separate the park pawl from the park gear) from the park pawl spring.

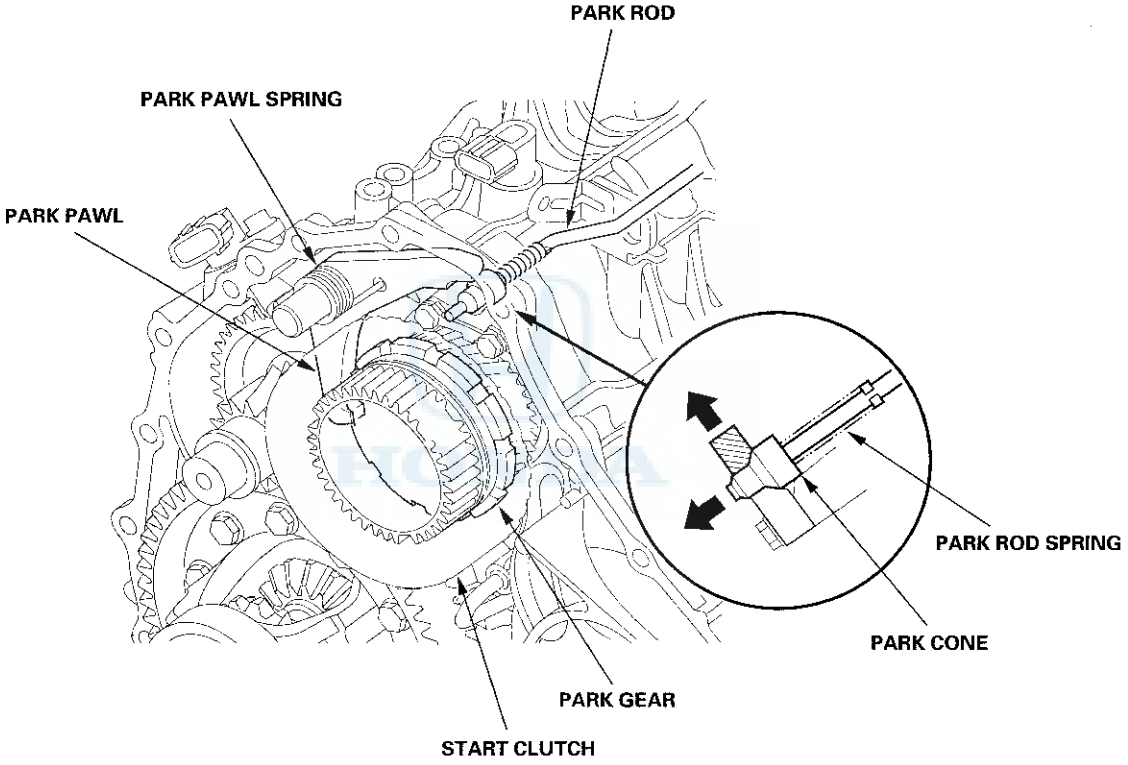

Shift Lock System

The shift lock system prevents the shift lever from mis-shifting. The shift lock solenoid is usually OFF. After starting the engine in P, the shift lever cannot move to any other position from P because the shift lock stop stops the lock pin unless the brake pedal is pressed. When the brake pedal is pressed and the accelerator pedal is not pressed, the shift lock solenoid is ON; the shift lock solenoid plunger in the shift lock solenoid pulls the shift lock stop to release the lock pin. Pressing the shift lever button allows the shift lever to move to any other position. When the brake pedal and the accelerator pedal are pressed at the same time, the shift lock system is not unlocked.

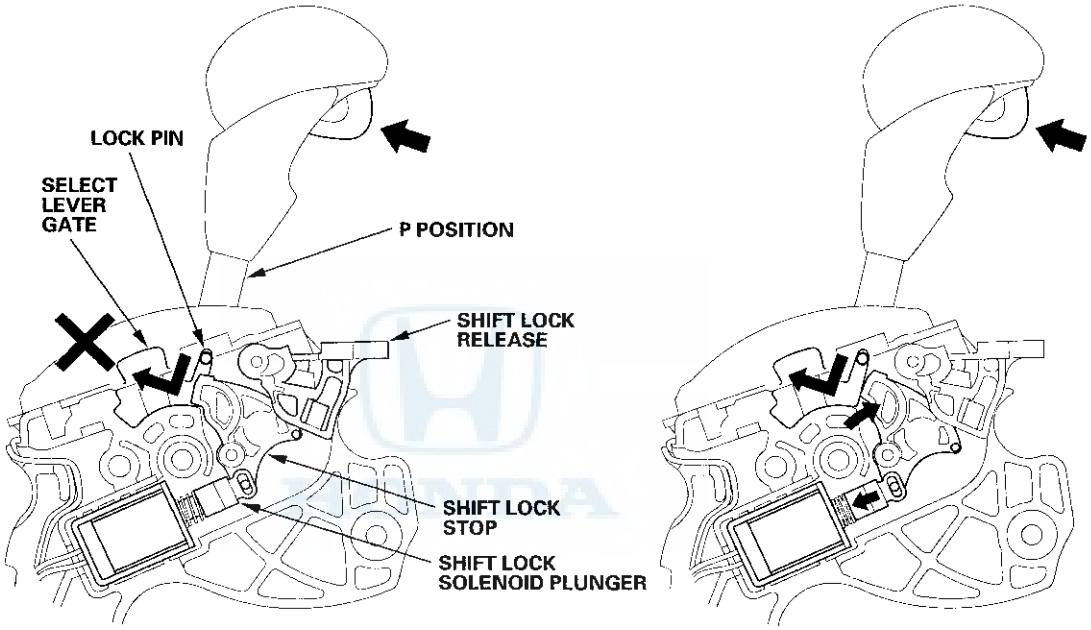

SHIFT LOCK SOLENOID: OFF

SHIFT LOCK SOLENOID: ON

(cont'd)

System Description (cont'd)

Shift Lock System (cont'd)

When the shift lock system does not operate due to mechanical or electrical trouble, you can unlock the shift lock temporarily by inserting the ignition key into the shift lock release hole and pressing the shift lock release. When the shift lock release is pressed, the shift lock stop releases the lock pin, and the shift lever can move to any other position.

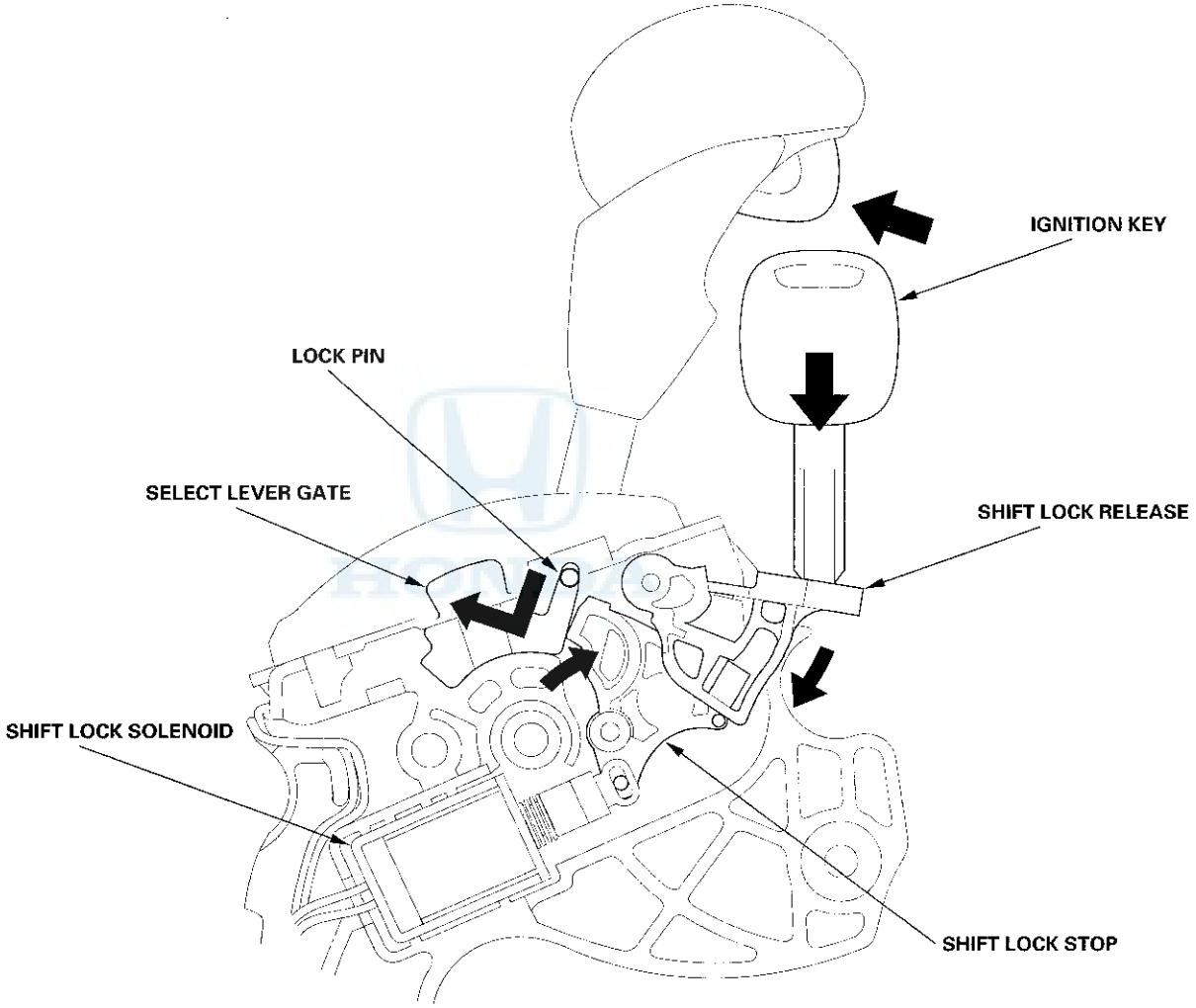

Circuit Diagram - PCM CVT Control System ('06 model)

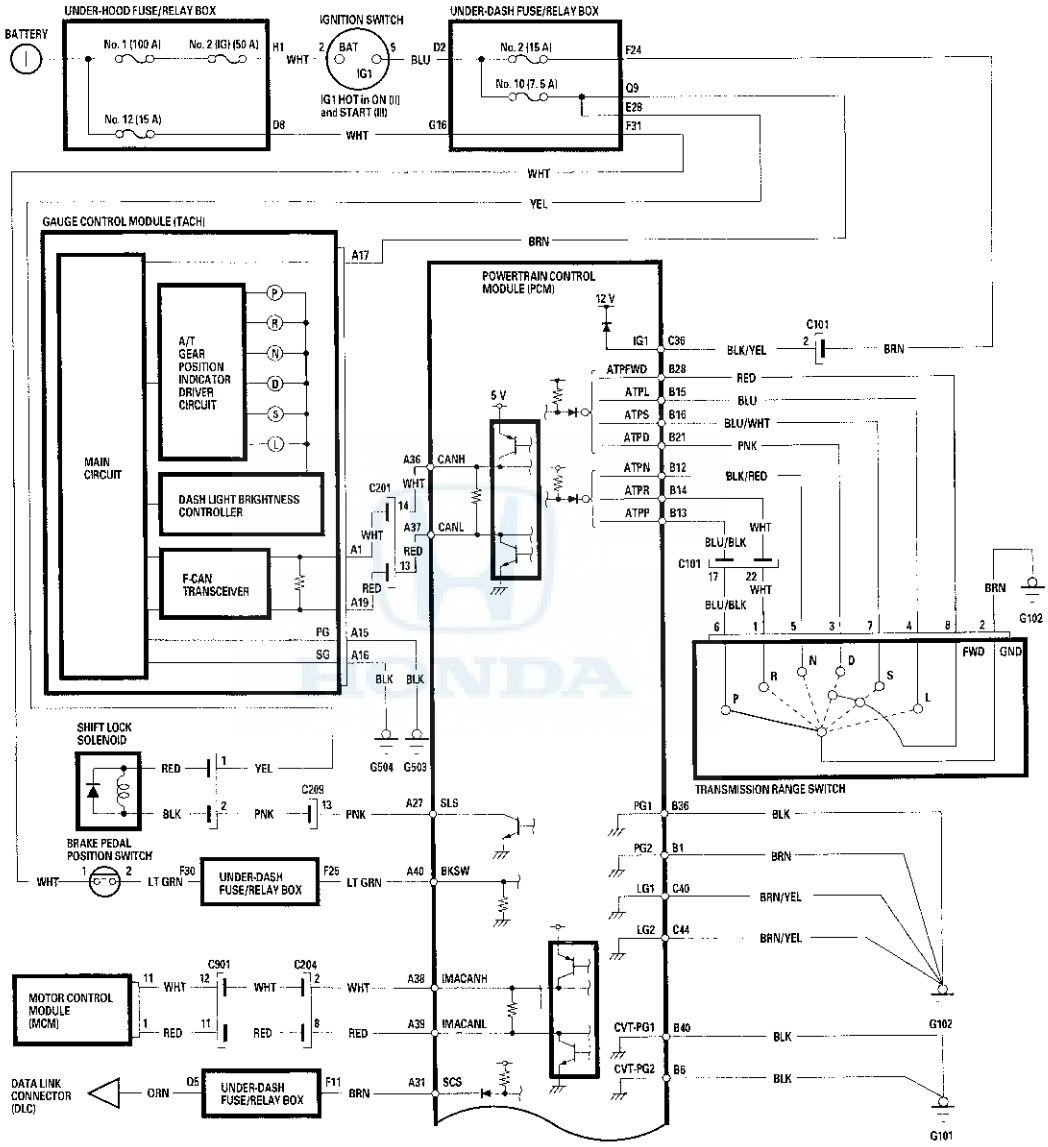

PCM Connector Terminal Locations

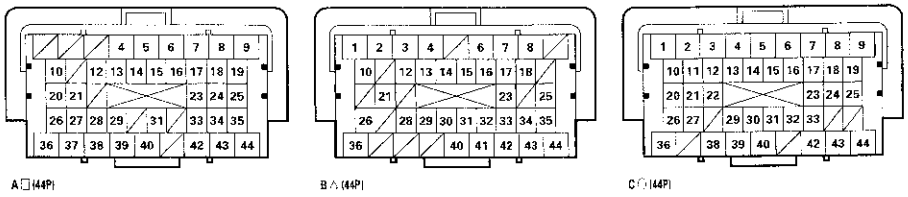

Terminal side of female terminals

(cont'd)

System Description (cont'd)

Circuit Diagram - PCM CVT Control System ('06 model) (cont'd)

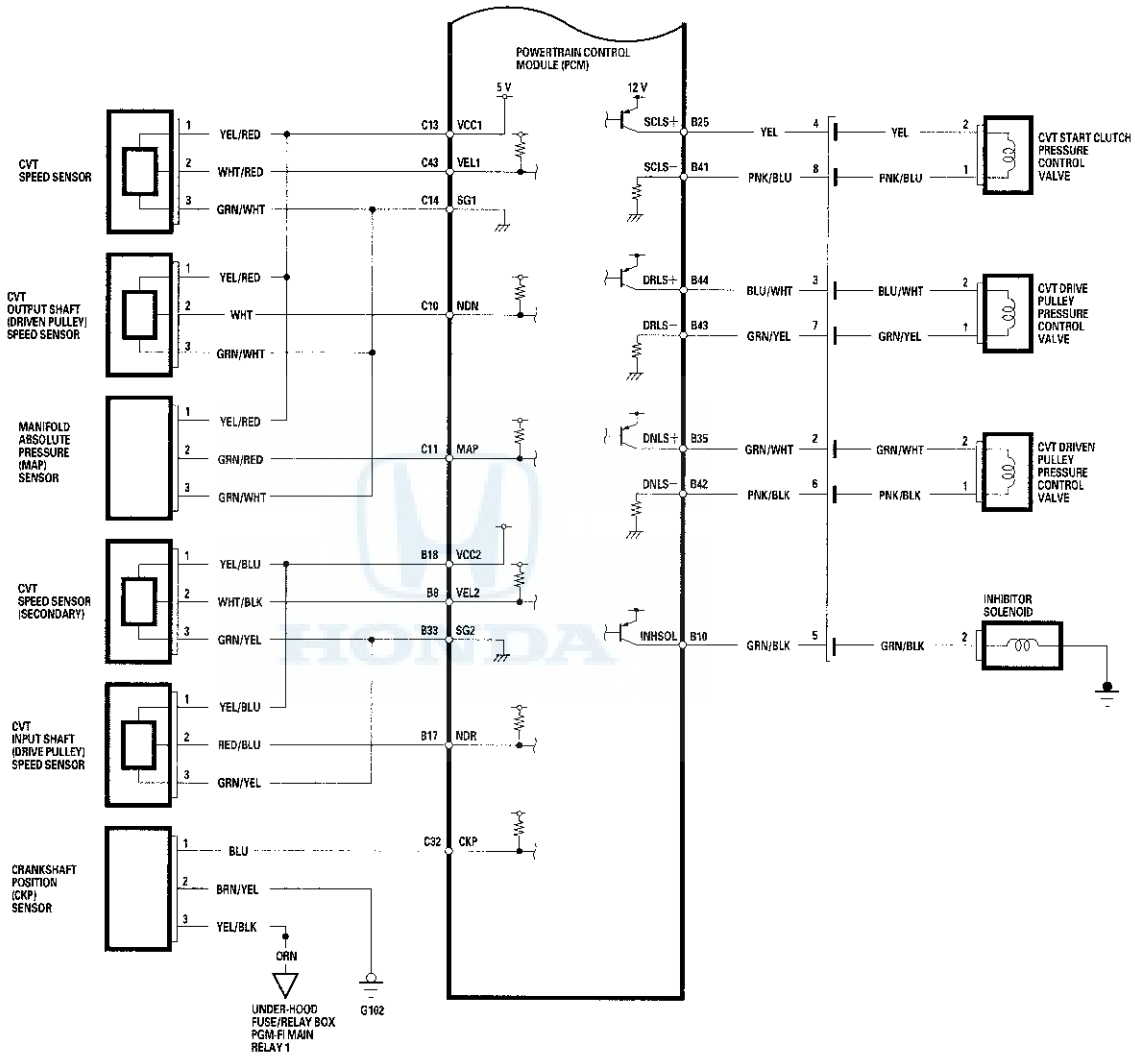

Circuit Diagram - PCM CVT Control System ('07-09 models)

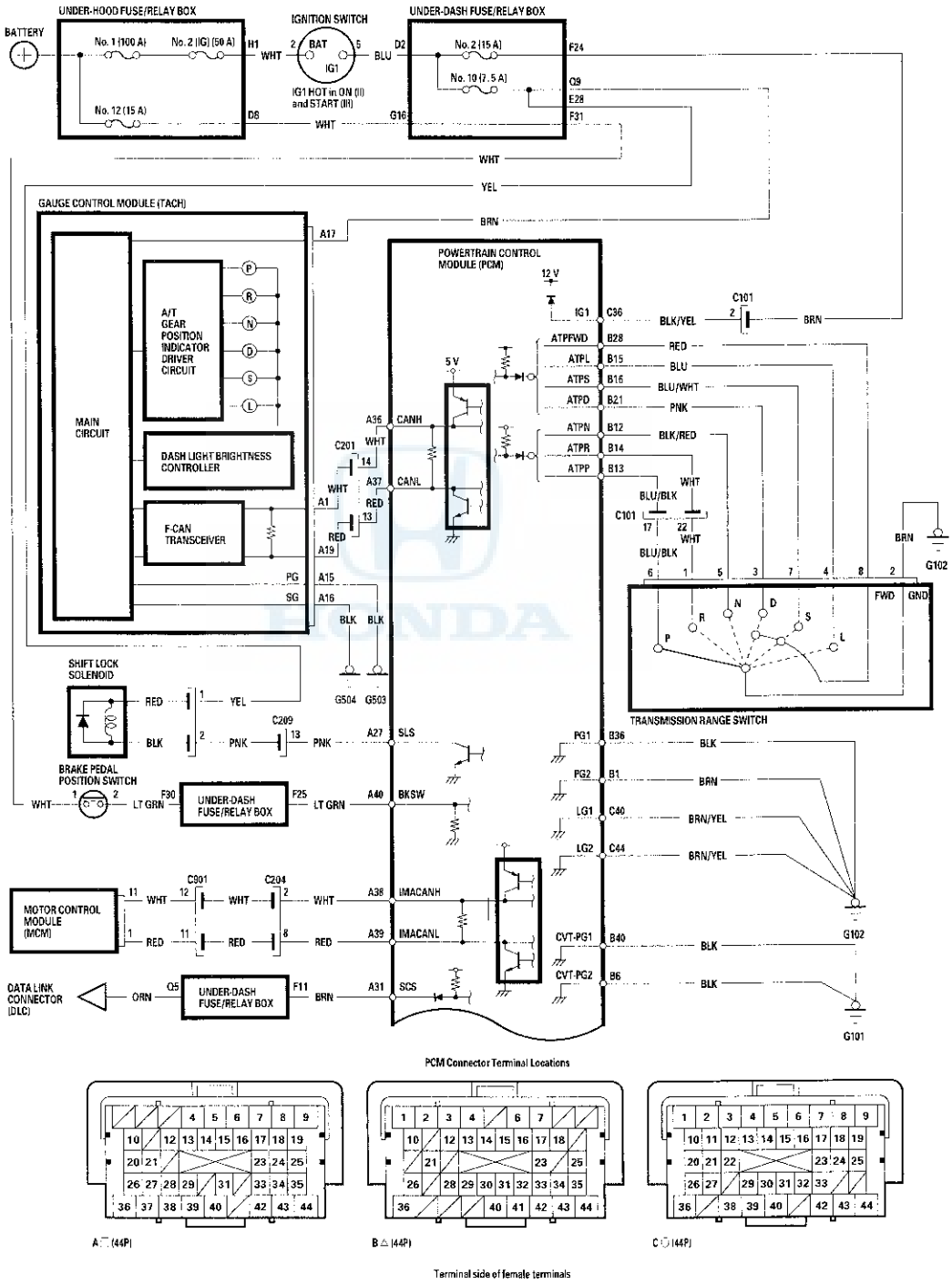

PCM Connector Terminal Locations

A (44P) B (44P) C (44P)

Terminal side of female terminals

(cont'd)

System Description (cont'd)

Circuit Diagram - PCM CVT Control System ('07-09 models) (cont'd)

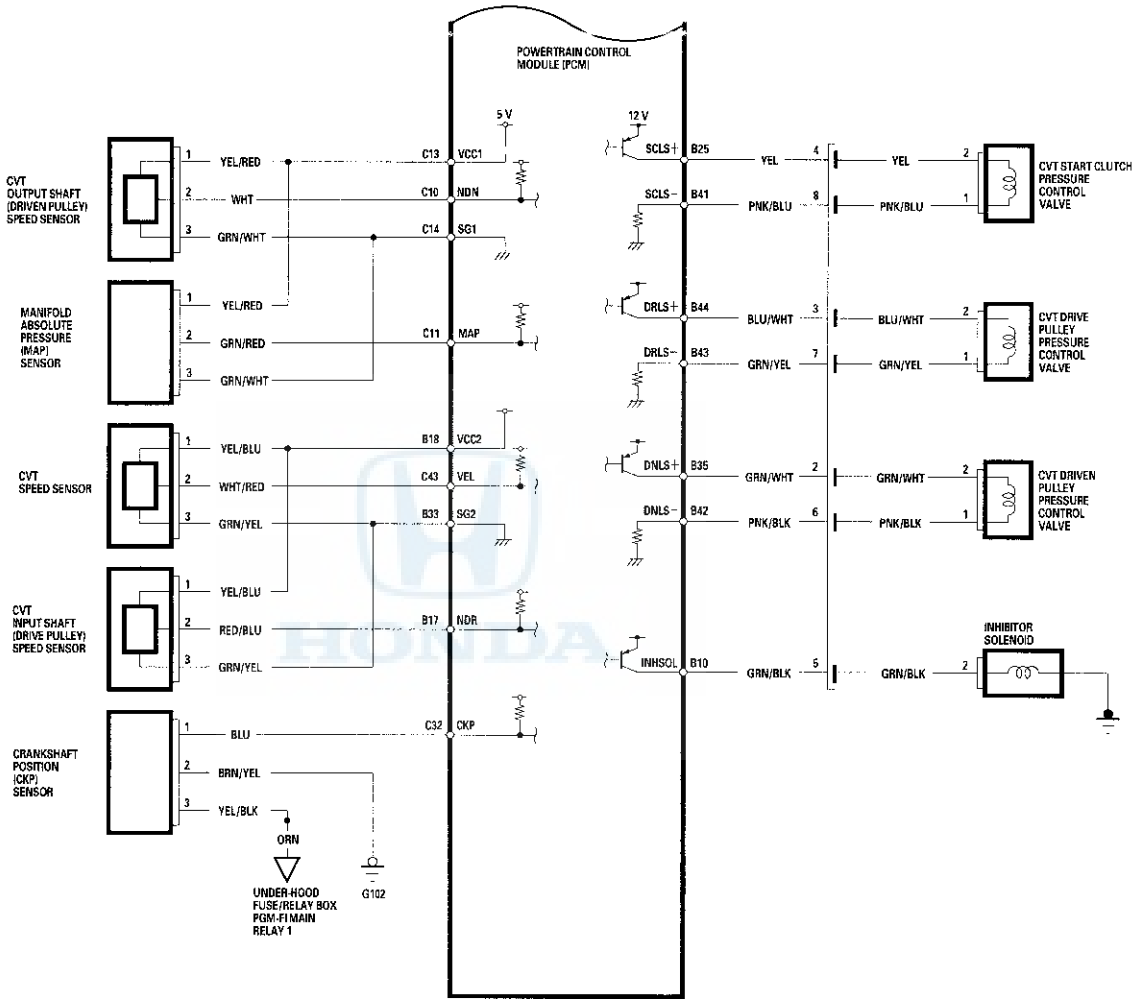

PCM Connector Terminal Locations

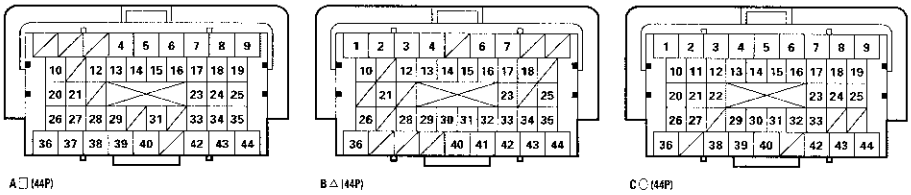

Terminal side of female terminals

DTC Troubleshooting

DTC P0107: Manifold Absolute Pressure (MAP) Sensor Circuit Low Voltage

DTC P0108: Manifold Absolute Pressure (MAP) Sensor Circuit High Voltage

NOTE: Before you troubleshoot, record all freeze data and any on-board snapshot with the HDS, and review General Troubleshooting Information (see page 14-3).

1. Turn the ignition switch to ON (II).

2. Clear the DTC with the HDS.

3. Turn the ignition switch to LOCK (0), then turn it to ON (II) again.

4. Check for Temporary DTCs or DTCs in the PGM-FI SYSTEM with the HDS.

   Is DTC P0107 or P0108 indicated in the PGM-FI SYSTEM?

   YES—Go to the DTC P0107 troubleshooting (see page 11-68) or DTC P0108 troubleshooting (see page 11-70) in the PGM-FI System.■

   NO—Go to step 5.

5. Check for Temporary DTCs or DTCs in the A/T SYSTEM with the HDS.

   Is DTC P0107 or P0108 indicated in the A/T SYSTEM?

   YES—Go to step 6.

   NO—Intermittent failure, the system is OK at this time. If any other Temporary DTCs or DTCs were indicated, go to the indicated DTC's troubleshooting.■

6. Update the PCM if it does not have the latest software (see page 11-236), or substitute a known-good PCM (see page 11-7).

7. Start the engine, and let it idle for at least 2 minutes.

8. Check for Temporary DTCs or DTCs the A/T SYSTEM with the HDS.

   Is DTC P0107 or P0108 indicated in the A/T SYSTEM?

   YES—Check for poor connections or loose terminals at the PCM. If the PCM was updated, substitute a known-good PCM (see page 11-7), then go to step 7. If the PCM was substituted, go to step 1.

   NO—Go to step 9.

9. Monitor the OBD STATUS for P0107 or P0108 in the DTCs MENU with the HDS.

   Does the HDS indicate PASSED?

   YES—If the PCM was updated, troubleshooting is complete. If the PCM was substituted, replace the original PCM (see page 11-238). If any other Temporary DTCs or DTCs were indicated in step 8, go to the indicated DTC's troubleshooting.■

   NO—If the HDS indicates FAILED, check for poor connections or loose terminals at the PCM. If the PCM was updated, substitute a known-good PCM (see page 11-7), then go to step 7. If the PCM was substituted, go to step 1. If the HDS indicates NOT COMPLETED, go to step 7.

DTC Troubleshooting (cont'd)

DTC P0335: Crankshaft Position (CKP) Sensor No Signal

NOTE: Before you troubleshoot, record all freeze data and any on-board snapshot with the HDS, and review General Troubleshooting Information (see page 14-3).

1. Turn the ignition switch to ON (II).

2. Clear the DTC with the HDS.

3. Start the engine, shift the shift lever to D, while pressing the brake pedal, and let the engine idle for at least 30 seconds.

4. Check for Temporary DTCs or DTCs in the PGM-FI SYSTEM with the HDS.

   Is DTC P0335 indicated in the PGM-FI SYSTEM?

   YES—Go to the DTC P0335 troubleshooting in the PGM-FI System (see page 11-115).■

   NO—Go to step 5.

5. Check for Temporary DTCs or DTCs in the A/T SYSTEM with the HDS.

   Is DTC P0335 indicated in the A/T SYSTEM?

   YES—Go to step 6.

   NO—Intermittent failure, the system is OK at this time. If any other Temporary DTCs or DTCs were indicated, go to the indicated DTC's troubleshooting.■

6. Update the PCM if it does not have the latest software (see page 11-236), or substitute a known-good PCM (see page 11-7).

7. Start the engine, and let it idle for at least 2 minutes.

8. Check for Temporary DTCs or DTCs the A/T SYSTEM with the HDS.

   Is DTC P0335 indicated in the A/T SYSTEM?

   YES—Check for poor connections or loose terminals at the PCM. If the PCM was updated, substitute a known-good PCM (see page 11-7), then go to step 7. If the PCM was substituted, go to step 1.

   NO—Go to step 9.

9. Monitor the OBD STATUS for P0335 in the DTCs MENU with the HDS.

   Does the HDS indicate PASSED?

   YES—If the PCM was updated, troubleshooting is complete. If the PCM was substituted, replace the original PCM (see page 11-238). If any other Temporary DTCs or DTCs were indicated in step 8, go to the indicated DTC's troubleshooting.■

   NO—If the HDS indicates FAILED, check for poor connections or loose terminals at the PCM. If the PCM was updated, substitute a known-good PCM (see page 11-7), then go to step 7. If the PCM was substituted, go to step 1. If the HDS indicates NOT COMPLETED, go to step 7.

DTC P0336: Range/Performance Problem in Crankshaft Position (CKP) Sensor Circuit

NOTE: Before you troubleshoot, record all freeze data and any on-board snapshot with the HDS, and review General Troubleshooting Information (see page 14-3).

1. Turn the ignition switch to ON (II).

2. Clear the DTC with the HDS.

3. Start the engine, shift the shift lever to D, while pressing the brake pedal, and let the engine idle for at least 30 seconds.

4. Check for Temporary DTCs or DTCs in the PGM-FI SYSTEM with the HDS.

   Is DTC P0335 or P0339 indicated in the PGM-FI SYSTEM?

   YES—Go to the DTC P0335 troubleshooting in the PGM-FI system (see page 11-115) or DTC P0339 troubleshooting in the PGM-FI System (see page 11-118).■

   NO—Go to step 5.

5. Check for Temporary DTCs or DTCs in the A/T SYSTEM with the HDS.

   Is DTC P0336 indicated in the A/T SYSTEM?

   YES—Go to step 6.

   NO—Intermittent failure, the system is OK at this time. If any other Temporary DTCs or DTCs were indicated, go to the indicated DTC's troubleshooting.■

6. Update the PCM if it does not have the latest software (see page 11-236), or substitute a known-good PCM (see page 11-7).

7. Start the engine, shift the shift lever to D, while pressing the brake pedal, and let it idle for at least 30 seconds.

8. Check for Temporary DTCs or DTCs the A/T SYSTEM with the HDS.

   Is DTC P0336 indicated in the A/T SYSTEM?

   YES—Check for poor connections or loose terminals at the PCM. If the PCM was updated, substitute a known-good PCM (see page 11-7), then go to step 7. If the PCM was substituted, go to step 1.

   NO—Go to step 9.

9. Monitor the OBD STATUS for P0336 in the DTCs MENU with the HDS.

   Does the HDS indicate PASSED?

   YES—If the PCM was updated, troubleshooting is complete. If the PCM was substituted, replace the original PCM (see page 11-238). If any other Temporary DTCs or DTCs were indicated in step 8, go to the indicated DTC's troubleshooting.■

   NO—If the HDS indicates FAILED, check for poor connections or loose terminals at the PCM. If the PCM was updated, substitute a known-good PCM (see page 11-7), then go to step 7. If the PCM was substituted, go to step 1. If the HDS indicates NOT COMPLETED, go to step 7.

DTC Troubleshooting (cont'd)

DTC P0501: Range/Performance Problem in CVT Speed Sensor Circuit

DTC P0502: Problem in CVT Speed Sensor Circuit

NOTE:
- Before you troubleshoot, record all freeze data and any on-board snapshot with the HDS, and review General Troubleshooting Information (see page 14-3).
- This code is caused by an electrical circuit problem and cannot be caused by a mechanical problem in the transmission.

'06 Model

1. Check for proper CVT speed sensor installation (see page 14-171). If the sensor is installed incorrectly, reinstall the sensor correctly, then go to step 26.

2. Turn the ignition switch to ON (II).

3. Clear the DTC with the HDS.

4. Block the rear wheels and raise the front of the vehicle. Make sure it is securely supported, and allow the front wheels to rotate freely, or raise the vehicle on a lift.

5. Start the engine, run the vehicle with the shift lever to D, and the engine speed at 2,000 rpm or higher for at least 10 seconds. Slow down and stop the wheels.

6. Monitor the OBD STATUS for P0501 or P0502 in the DTCs MENU with the HDS.

   Does the HDS indicate FAILED?

   YES—Go to step 7.

   NO—If the HDS indicates PASSED, intermittent failure, the system is OK at this time. Check for poor connections or loose terminals between the PCM and the CVT speed sensor. If the HDS indicates NOT COMPLETED, go to step 5.

7. Turn the ignition switch to LOCK (0).

8. Jump the SCS line with the HDS.

9. Disconnect PCM connector C (44P).

10. Check for continuity between PCM connector terminal C40 and body ground, and between PCM connector terminal C44 and body ground.

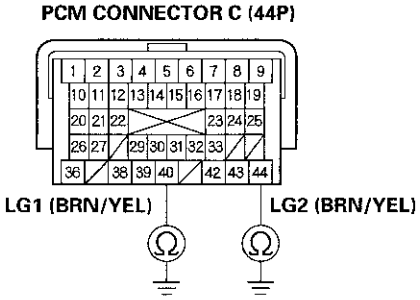

Terminal side of female terminals

Is there continuity?

YES—Go to step 11.

NO—Repair open in the wires between PCM connector terminals C40, C44, and body ground (G102), or repair poor body ground (G102), then go to step 26.

11. Connect PCM connector C (44P).

12. Disconnect the CVT speed sensor connector.

13. Turn the ignition switch to ON (II).

14. Measure the voltage between CVT speed sensor connector terminal No. 1 and body ground.

CVT SPEED SENSOR CONNECTOR

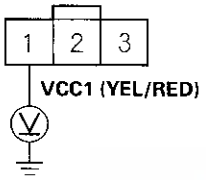

Wire side of female terminals

Is there about 5 V?

YES—Go to step 19.

NO—Go to step 15.

15. Turn the ignition switch to LOCK (0).

16. Jump the SCS line with the HDS.

17. Disconnect PCM connector C (44P).

18. Check for continuity between PCM connector terminal C13 and CVT speed sensor connector terminal No. 1.

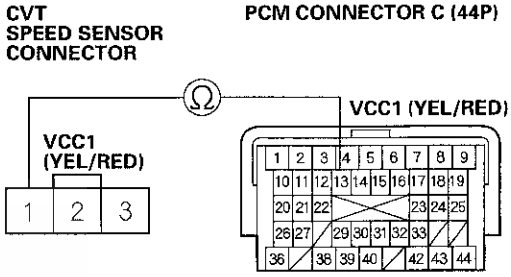

Wire side of female terminals

Terminal side of female terminals

Is there continuity?

YES—Go to step 32.

NO—Repair open in the wire between PCM connector terminal C13 and the CVT speed sensor, then go to step 26.

(cont'd)

DTC Troubleshooting (cont'd)

19. Measure the voltage between CVT speed sensor connector terminals No. 2 and No. 3.

CVT SPEED SENSOR CONNECTOR

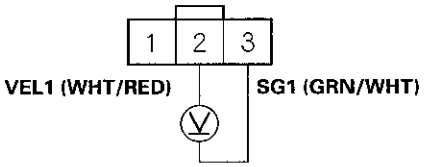

Wire side of female terminals

Is there about 5 V?

YES—Replace the CVT speed sensor (see page 14-171), then go to step 26.

NO—Go to step 20.

20. Turn the ignition switch to LOCK (0).

21. Jump the SCS line with the HDS.

22. Disconnect PCM connector C (44P).

23. Check for continuity between CVT speed sensor connector terminal No. 2 and body ground.

CVT SPEED SENSOR CONNECTOR

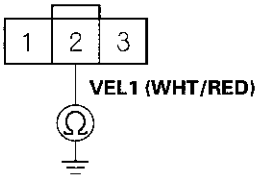

Wire side of female terminals

Is there continuity?

YES—Repair short to body ground in the wire between PCM connector terminal C43 and the CVT speed sensor connector, then go to step 26.

NO—Go to step 24.

24. Check for continuity between PCM connector terminal C14 and CVT speed sensor connector terminal No. 3.

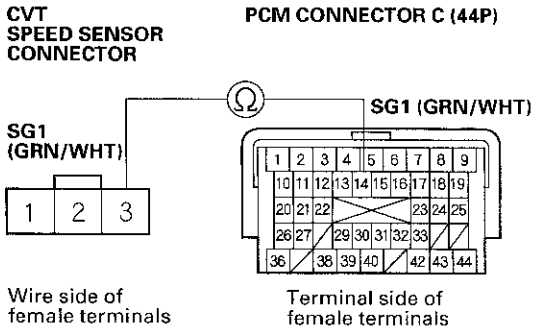

Is there continuity?

YES—Go to step 25.

NO—Repair open in the wire between the CVT speed sensor connector and PCM connector terminal C14, then go to step 26.

25. Check for continuity between PCM connector terminal C43 and CVT speed sensor connector terminal No. 2.

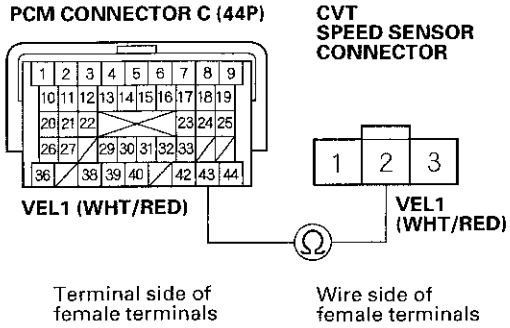

Is there continuity?

YES—Go to step 32.

NO—Repair open in the wire between PCM connector terminal C43 and the CVT speed sensor, then go to step 26.

(cont'd)

DTC Troubleshooting (cont'd)

26. Reconnect all connectors.

27. Turn the ignition switch to ON (II).

28. Clear the DTC with the HDS.

29. Start the engine, run the vehicle with the shift lever to D, and keep the vehicle at speeds over 9 mph (15 km/h) for at least 10 seconds. Slow down and stop the wheels.

30. Check for Temporary DTCs or DTCs with the HDS.

    Is DTC P0501 or P0502 indicated?

    YES—Check for poor connections or loose terminals between the CVT speed sensor and the PCM, then go to step 1.

    NO—Go to step 31.

31. Monitor the OBD STATUS for P0501 or P0502 in the DTCs MENU with the HDS.

    Does the HDS indicate PASSED?

    YES—Troubleshooting is complete. If any other Temporary DTCs or DTCs were indicated in step 30, go to the indicated DTC's troubleshooting.■

    NO—If the HDS indicates FAILED, check for poor connections or loose terminals between the CVT speed sensor and the PCM, then go to step 1. If the HDS indicates NOT COMPLETED, go to step 29.

32. Reconnect all connectors.

33. Update the PCM if it does not have the latest software (see page 11-236), or substitute a known-good PCM (see page 11-7).

34. Start the engine, run the vehicle with the shift lever to D, and keep the vehicle at speeds over 9 mph (15 km/h) for at least 10 seconds. Slow down and stop the wheels.

35. Check for Temporary DTCs or DTCs with the HDS.

    Is DTC P0501 or P0502 indicated?

    YES—Check for poor connections or loose terminals between the CVT speed sensor and the PCM. If the PCM was updated, substitute a known-good PCM (see page 11-7), then go to step 34. If the PCM was substituted, go to step 1.

    NO—Go to step 36.

36. Monitor the OBD STATUS for P0501 or P0502 in the DTCs MENU with the HDS.

    Does the HDS indicate PASSED?

    YES—If the PCM was updated, troubleshooting is complete. If the PCM was substituted, replace the original PCM (see page 11-238). If any other Temporary DTCs or DTCs were indicated in step 35, go to the indicated DTC's troubleshooting.■

    NO—If the HDS indicates FAILED, check for poor connections or loose terminals between the CVT speed sensor and the PCM. If the PCM was updated, substitute a known-good PCM (see page 11-7), then go to step 34. If the PCM was substituted, go to step 1. If the HDS indicates NOT COMPLETED, go to step 34.

DTC P0501: Range/Performance Problem in CVT Speed Sensor Circuit

NOTE:
- Before you troubleshoot, record all freeze data and any on-board snapshot with the HDS, and review General Troubleshooting Information (see page 14-3).
- This code is caused by an electrical circuit problem and cannot be caused by a mechanical problem in the transmission.

'07-09 Models

1. Turn the ignition switch to ON (II).

2. Clear the DTC with the HDS.

3. Block the rear wheels and raise the front of the vehicle. Make sure it is securely supported, and allow the front wheels to rotate freely, or raise the vehicle on a lift.

4. Start the engine. Disable the VSA (if equipped) by pressing the VSA OFF switch, and run the vehicle with the shift lever to L, and the engine speed at 4,500 rpm or higher, then release the accelerator without pressing it again, for at least 6 seconds. Slow down and stop the wheels.

5. Monitor the OBD STATUS for P0501 in the DTCs MENU with the HDS.

   Does the HDS indicate FAILED?

   YES—Replace the CVT speed sensor (see page 14-171), then go to step 6.

   NO—If the HDS indicates PASSED, intermittent failure, the system is OK at this time. Check for poor connections or loose terminals between the PCM and the CVT speed sensor. If the HDS indicates NOT COMPLETED, go to step 4.

6. Turn the ignition switch to ON (II).

7. Clear the DTC with the HDS.

8. Start the engine, run the vehicle with the shift lever to D, and keep the vehicle at speeds over 24 mph (40 km/h) while monitoring the Output shaft (Driven pulley) Speed rpm in the Data List with the HDS, then release the accelerator without pressing it again, for at least 7 seconds.

9. Check for DTC with the HDS.

   Is DTC P 0501 indicated?

   YES—Check for poor connections or loose terminals between the CVT speed sensor and the PCM, then go to step 11.

   NO—Go to step 10.

10. Monitor the OBD STATUS for P0501 in the DTCs MENU with the HDS.

    Does the HDS indicate PASSED?

    YES—Troubleshooting is complete. If any other Temporary DTCs or DTCs were indicated in step 9, go to the indicated DTC's troubleshooting. ■

    NO—If the HDS indicates FAILED, check for poor connections or loose terminals between the CVT speed sensor and the PCM, then go to step 1. If the HDS indicates NOT COMPLETED, go to step 8.

11. Update the PCM if it does not have the latest software (see page 11-236), or substitute a known-good PCM (see page 11-7).

12. Start the engine, run the vehicle with the shift lever to D, and keep the vehicle at speeds over 24 mph (40 km/h) while monitoring the Output shaft (Driven pulley) Speed rpm in the Data List with the HDS, then release the accelerator without pressing it again, for at least 7 seconds.

(cont'd)

DTC Troubleshooting (cont'd)

13. Check for Temporary DTCs or DTCs with the HDS.

    Is DTC P0501 indicated?

    YES—Check for poor connections or loose terminals between the CVT speed sensor and the PCM. If the PCM was updated, substitute a known-good PCM (see page 11-7), then go to step 12. If the PCM was substituted, go to step 1.

    NO—Go to step 14.

14. Monitor the OBD STATUS for P0501 in the DTCs MENU with the HDS.

    Does the HDS indicate PASSED?

    YES—If the PCM was updated, troubleshooting is complete. If the PCM was substituted, replace the original PCM (see page 11-238). If any other Temporary DTCs or DTCs were indicated in step 13, go to the indicated DTC's troubleshooting.■

    NO—If the HDS indicates FAILED, check for poor connections or loose terminals between the CVT speed sensor and the PCM. If the PCM was updated, substitute a known-good PCM (see page 11-7), then go to step 12. If the PCM was substituted, go to step 1. If the HDS indicates NOT COMPLETED, go to step 12.

DTC P0502: Problem in CVT Speed Sensor Circuit

NOTE:
- Before you troubleshoot, record all freeze data and any on-board snapshot with the HDS, and review General Troubleshooting Information (see page 14-3).
- This code is caused by an electrical circuit problem and cannot be caused by a mechanical problem in the transmission.

'07-09 Models

1. Turn the ignition switch to ON (II).

2. Clear the DTC with the HDS.

3. Block the rear wheels, and raise the front of the vehicle. Make sure it is securely supported, and allow the front wheels to rotate freely, or raise the vehicle on a lift.

4. Start the engine, run the vehicle with the shift lever to L, and the engine speed at 4,500 rpm or higher, then release the accelerator without pressing it again, for at least 6 seconds.

5. Check the Output Shaft (Driven Pulley) Speed (rpm) in the Data List with the HDS.

   Is the Output Shaft (Driven Pulley) Speed (rpm) more than 100 rpm?

   YES—Intermittent failure, the system is OK at this time. Check for poor connections or loose terminals between the PCM and the CVT speed sensor, then go to step 16.

   NO—Go to step 6.

6. Turn the ignition switch to LOCK (0).

7. Disconnect the CVT speed sensor connector.

8. Turn the ignition switch to ON (II).

9. Measure the voltage between CVT speed sensor connector terminal No. 1 and body ground.

CVT SPEED SENSOR CONNECTOR

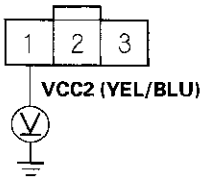

Wire side of female terminals

Is there about 5 V?

YES—Go to step 10.

NO—Go to step 16.

10. Measure the voltage between CVT speed sensor connector terminals No. 1 and No. 3.

CVT SPEED SENSOR CONNECTOR

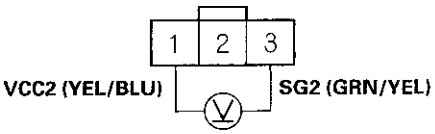

Wire side of female terminals

Is there about 5 V?

YES—Go to step 11.

NO—Repair open in the wire between PCM connector terminal B33 and CVT speed sensor connector terminal No. 3, then go to step 16.

(cont'd)

DTC Troubleshooting (cont'd)

11. Measure the voltage between CVT speed sensor connector terminals No. 2 and No. 3.

CVT SPEED SENSOR CONNECTOR

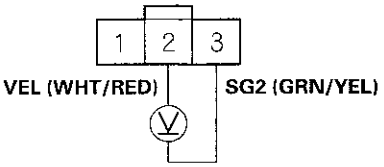

Wire side of female terminals

Is there about 5 V?

YES—Replace the CVT speed sensor (see page 14-171), then go to step 16.

NO—Go to step 12.

12. Turn the ignition switch to LOCK (0).

13. Jump the SCS line with the HDS.

14. Disconnect PCM connector C (44P).

15. Check for continuity between PCM connector terminal C43 and body ground.

PCM CONNECTOR C (44P)

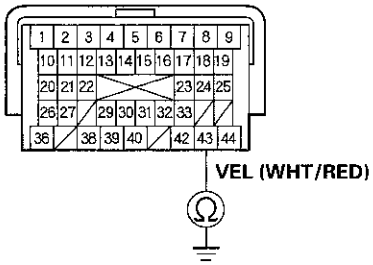

Terminal side of female terminals

Is there continuity?

YES—Repair short to body ground in the wire between PCM connector terminal C43 and CVT speed sensor connector terminal No. 2, then go to step 16.

NO—Repair open in the wire between PCM connector terminal C43 and CVT speed sensor connector terminal No. 2, then go to step 16.

16. Reconnect all connectors.

17. Turn the ignition switch to ON (II).

18. Clear the DTC with the HDS.

19. Start the engine, run the vehicle with the shift lever to D, and keep the vehicle at speeds over 24 mph (40 km/h) while monitoring the Output Shaft (Driven Pulley) Speed (rpm) in the Data List with the HDS, then release the accelerator without pressing it again, for at least 7 seconds.

20. Check for Temporary DTCs or DTCs with the HDS.

    Is DTC P0502 indicated?

    YES—Check for poor connections or loose terminals between the CVT speed sensor and the PCM, then go to step 22.

    NO—Go to step 21.

21. Monitor the OBD STATUS for P0502 in the DTCs MENU with the HDS.

    Does the HDS indicate PASSED?

    YES—Troubleshooting is complete. If any other Temporary DTCs or DTCs were indicated in step 20, go to the indicated DTC's troubleshooting. ■

    NO—If the HDS indicates FAILED, check for poor connections or loose terminals between the CVT speed sensor and the PCM, then go to step 1. If the HDS indicates NOT COMPLETED, go to step 19.

22. Reconnect all connectors.

23. Update the PCM if it does not have the latest software (see page 11-236), or substitute a known-good PCM (see page 11-7).

24. Start the engine, run the vehicle with the shift lever to D, and keep the vehicle at speeds over 24 mph (40 km/h) while monitoring the Output Shaft (Driven Pulley) Speed (rpm) in the Data List with the HDS, then release the accelerator without pressing it again, for at least 7 seconds. Stop the wheels.

25. Check for Temporary DTCs or DTCs with the HDS.

    Is DTC P0502 indicated?

    YES—Check for poor connections or loose terminals between the CVT speed sensor and the PCM. If the PCM was updated, substitute a known-good PCM (see page 11-7), then go to step 24. If the PCM was substituted, go to step 1.

    NO—Go to step 26.

26. Monitor the OBD STATUS for P0502 in the DTCs MENU with the HDS.

    Does the HDS indicate PASSED?

    YES—If the PCM was updated, troubleshooting is complete. If the PCM was substituted, replace the original PCM (see page 11-238). If any other Temporary DTCs or DTCs were indicated in step 25, go to the indicated DTC's troubleshooting. ■

    NO—If the HDS indicates FAILED, check for poor connections or loose terminals between the CVT speed sensor and the PCM. If the PCM was updated, substitute a known-good PCM (see page 11-7), then go to step 24. If the PCM was substituted, go to step 1. If the HDS indicates NOT COMPLETED, go to step 24.

DTC Troubleshooting (cont'd)

DTC P0603: Powertrain Control Module (PCM) Internal Control Module Keep Alive Memory (KAM) Error

NOTE: Before you troubleshoot, record all freeze data and any on-board snapshot with the HDS, and review General Troubleshooting Information (see page 14-3).

1. Turn the ignition switch to ON (II).

2. Clear the DTC with the HDS.

3. Check for Temporary DTCs or DTCs in the PGM-FI SYSTEM with the HDS.

   Is DTC P0603 indicated in the PGM-FI SYSTEM?

   YES—Go to the DTC P0603 troubleshooting in the PGM-FI System (see page 11-135). ■

   NO—Go to step 4.

4. Check for Temporary DTCs or DTCs in the A/T SYSTEM with the HDS.

   Is DTC P0603 indicated in the A/T SYSTEM?

   YES—Go to step 5.

   NO—Intermittent failure, the system is OK at this time. If any other Temporary DTCs or DTCs were indicated, go to the indicated DTC's troubleshooting. ■

5. Update the PCM if it does not have the latest software (see page 11-236), or substitute a known-good PCM (see page 11-7).

6. Turn the ignition switch to ON (II).

7. Check for Temporary DTCs or DTCs in the A/T SYSTEM with the HDS.

   Is DTC P0603 indicated in the A/T SYSTEM?

   YES—Check for poor connections or loose terminals at the PCM. If the PCM was updated, substitute a known-good PCM (see page 11-7), then go to step 6. If the PCM was substituted, go to step 1.

   NO—If the PCM was updated, troubleshooting is complete. If the PCM was substituted, replace the original PCM (see page 11-238). If any other Temporary DTCs or DTCs were indicated, go to the indicated DTC's troubleshooting. ■

DTC P0705: Short in Transmission Range Switch Circuit (Multiple Shift-position Input)

NOTE:
- Before you troubleshoot, record all freeze data and any on-board snapshot with the HDS, and review General Troubleshooting Information (see page 14-3).
- This code is caused by an electrical circuit problem and cannot be caused by a mechanical problem in the transmission.

1. Turn the ignition switch to ON (II).

2. Clear the DTC with the HDS.

3. Start the engine.

4. With the brake pedal pressed, move the shift lever through all positions. Stop for at least 1 second in each position.

5. Monitor the OBD STATUS for P0705 in the DTCs MENU with the HDS.

   Does the HDS indicate FAILED?

   YES—Go to step 6.

   NO—If the HDS indicates PASSED, intermittent failure, the system is OK at this time. Check for intermittent short to body ground in the wire between the transmission range switch and the PCM. If the HDS indicates NOT COMPLETED, go to step 3.

6. Turn the ignition switch to LOCK (0).

7. Inspect the transmission range switch (see page 14-211).

   Is the transmission range switch OK?

   YES—With the transmission range switch connector disconnected, go to step 8.

   NO—Replace the transmission range switch (see page 14-212), then go to step 45.

8. Turn the ignition switch to ON (II).

9. Measure the voltage between transmission range switch connector terminals No. 2 and No. 6.

TRANSMISSION RANGE SWITCH CONNECTOR

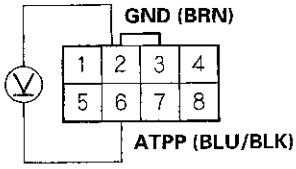

Wire side of female terminals

Is there more than 5 V?

YES—Go to step 15.

NO—Go to step 10.

(cont'd)

DTC Troubleshooting (cont'd)

10. Turn the ignition switch to LOCK (0).

11. Jump the SCS line with the HDS.

12. Disconnect PCM connector B (44P).

13. Check for continuity between PCM connector terminal B13 and body ground.

PCM CONNECTOR B (44P)

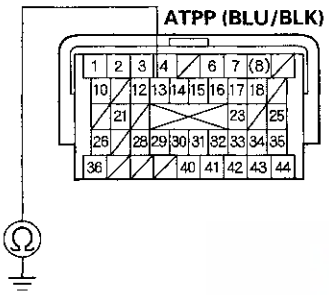

Terminal side of female terminals

Is there continuity?

YES—Repair short to body ground in the wire between PCM connector terminal B13 and the transmission range switch, then go to step 45.

NO—Go to step 14.

14. Check for continuity between transmission range switch connector terminal No. 2 and body ground.

TRANSMISSION RANGE SWITCH CONNECTOR

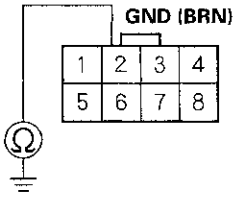

Wire side of female terminals

Is there continuity?

YES—Go to step 52.

NO—Repair open in the wire between transmission range switch connector terminal No. 2 and body ground (G102), or repair poor body ground (G102), then go to step 45.

15. Measure the voltage between transmission range switch connector terminals No. 1 and No. 2.

TRANSMISSION RANGE SWITCH CONNECTOR

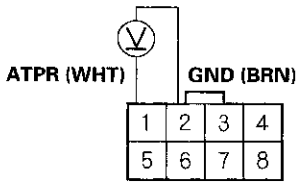

Wire side of female terminals

Is there more than 5 V?

YES—Go to step 20.

NO—Go to step 16.

16. Turn the ignition switch to LOCK (0).

17. Jump the SCS line with the HDS.

18. Disconnect PCM connector B (44P).

19. Check for continuity between PCM connector terminal B14 and body ground.

PCM CONNECTOR B (44P)

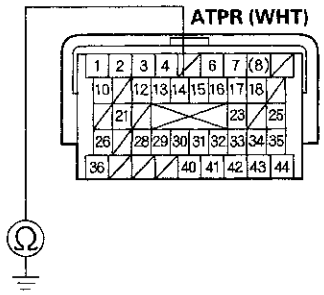

Terminal side of female terminals

Is there continuity?

YES—Repair short to body ground in the wire between PCM connector terminal B14 and the transmission range switch, then go to step 45.

NO—Go to step 52.

(cont'd)

DTC Troubleshooting (cont'd)

20. Measure the voltage between transmission range switch connector terminals No. 2 and No. 5.

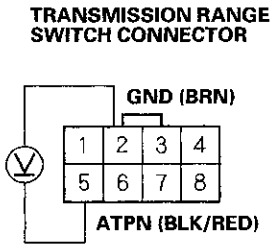

Wire side of female terminals

Is there more than 5 V?

YES—Go to step 25.

NO—Go to step 21.

21. Turn the ignition switch to LOCK (0).

22. Jump the SCS line with the HDS.

23. Disconnect PCM connector B (44P).

24. Check for continuity between PCM connector terminal B12 and body ground.

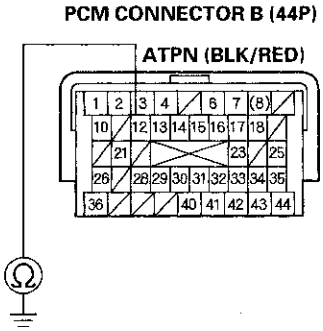

Terminal side of female terminals

Is there continuity?

YES—Repair short to body ground in the wire between PCM connector terminal B12 and the transmission range switch, then go to step 45.

NO—Go to step 52.

25. Measure the voltage between transmission range switch connector terminals No. 2 and No. 3.

TRANSMISSION RANGE SWITCH CONNECTOR

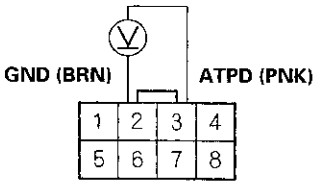

Wire side of female terminals

Is there battery voltage?

YES—Go to step 30.

NO—Go to step 26.

26. Turn the ignition switch to LOCK (0).

27. Jump the SCS line with the HDS.

28. Disconnect PCM connector B (44P).

29. Check for continuity between PCM connector terminal B21 and body ground.

PCM CONNECTOR B (44P)

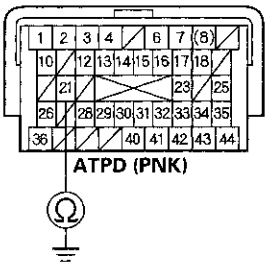

Terminal side of female terminals

Is there continuity?

YES—Repair short to body ground in the wire between PCM connector terminal B21 and the transmission range switch, then go to step 45.

NO—Go to step 52.

(cont'd)

DTC Troubleshooting (cont'd)

30. Measure the voltage between transmission range switch connector terminals No. 2 and No. 7.

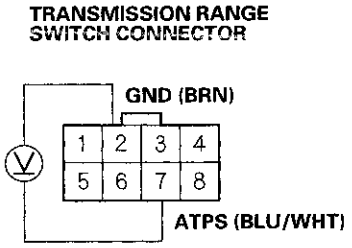

Wire side of female terminals

Is there battery voltage?

YES—Go to step 35.

NO—Go to step 31.

31. Turn the ignition switch to LOCK (0).

32. Jump the SCS line with the HDS.

33. Disconnect PCM connector B (44P).

34. Check for continuity between PCM connector terminal B16 and body ground.

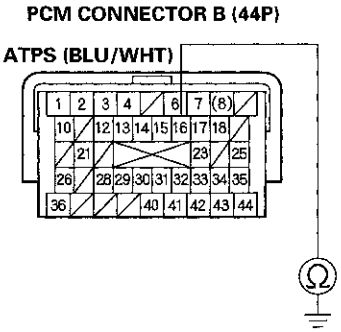

Terminal side of female terminals

Is there continuity?

YES—Repair short to body ground in the wire between PCM connector terminal B16 and the transmission range switch, then go to step 45.

NO—Go to step 52.

35. Measure the voltage between transmission range switch connector terminals No. 2 and No. 4.

TRANSMISSION RANGE SWITCH CONNECTOR

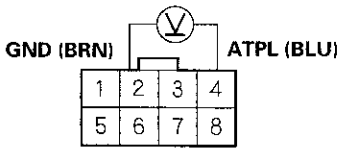

Wire side of female terminals

Is there battery voltage?

YES—Go to step 40.

NO—Go to step 36.

36. Turn the ignition switch to LOCK (0).

37. Jump the SCS line with the HDS.

38. Disconnect PCM connector B (44P).

39. Check for continuity between PCM connector terminal B15 and body ground.

PCM CONNECTOR B (44P)

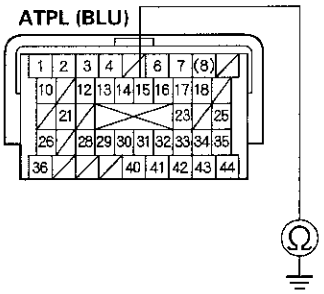

Terminal side of female terminals

Is there continuity?

YES—Repair short to body ground in the wire between PCM connector terminal B15 and the transmission range switch, then go to step 45.

NO—Go to step 52.

(cont'd)

DTC Troubleshooting (cont'd)

40. Measure the voltage between transmission range switch connector terminals No. 2 and No. 8.

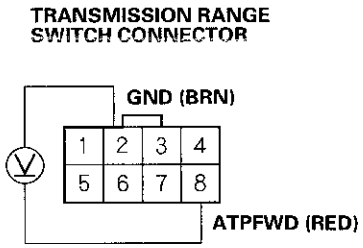

Wire side of female terminals

Is there battery voltage?

YES—Go to step 52.

NO—Go to step 41.

41. Turn the ignition switch to LOCK (0).

42. Jump the SCS line with the HDS.

43. Disconnect PCM connector B (44P).

44. Check for continuity between PCM connector terminal B28 and body ground.

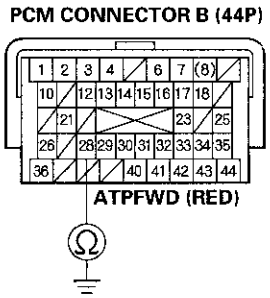

Terminal side of female terminals

Is there continuity?

YES—Repair short to body ground in the wire between PCM connector terminal B28 and the transmission range switch, then go to step 45.

NO—Go to step 52.

45. Reconnect all connectors.

46. Turn the ignition switch to ON (II).

47. Clear the DTC with the HDS.

48. Start the engine.

49. With the brake pedal pressed, move the shift lever through all positions. Stop for at least 1 second in each position.

50. Check for Temporary DTCs or DTCs with the HDS.

    Is DTC P0705 indicated?

    YES—Check for intermittent short to body ground between the transmission range switch and the PCM, then go to step 1.

    NO—Go to step 51.

51. Monitor the OBD STATUS for P0705 in the DTCs MENU with the HDS.

    Does the HDS indicate PASSED?

    YES—Troubleshooting is complete. If any other Temporary DTCs or DTCs were indicated in step 50, go to the indicated DTC's troubleshooting.■

    NO—If the HDS indicates FAILED, check for intermittent short to body ground in the wire between the transmission range switch and the PCM, then go to step 1. If the HDS indicates NOT COMPLETED, go to step 48.

52. Reconnect all connectors.

53. Update the PCM if it does not have the latest software (see page 11-236), or substitute a known-good PCM (see page 11-7).

54. Start the engine.

55. With the brake pedal pressed, move the shift lever through all positions. Stop for at least 1 second in each position.

56. Check for Temporary DTCs or DTCs with the HDS.

    Is DTC P0705 indicated?

    YES—Check for intermittent short to body ground between the transmission range switch and the PCM. If the PCM was updated, substitute a known-good PCM (see page 11-7), then go to step 54. If the PCM was substituted, go to step 1.

    NO—Go to step 57.

57. Monitor the OBD STATUS for P0705 in the DTCs MENU with the HDS.

    Does the HDS indicate PASSED?

    YES—If the PCM was updated, troubleshooting is complete. If the PCM was substituted, replace the original PCM (see page 11-238). If any other Temporary DTCs or DTCs were indicated in step 56, go to the indicated DTC's troubleshooting.■

    NO—If the HDS indicates FAILED, check for intermittent short to body ground between the transmission range switch and the PCM. If the PCM was updated, substitute a known-good PCM (see page 11-7), then go to step 54. If the PCM was substituted, go to step 1. If the HDS indicates NOT COMPLETED, go to step 54.

DTC Troubleshooting (cont'd)

DTC P0706: Open in Transmission Range Switch Circuit

NOTE:
- Before you troubleshoot, record all freeze data and any on-board snapshot with the HDS, and review General Troubleshooting Information (see page 14-3).
- This code is caused by an electrical circuit problem and cannot be caused by a mechanical problem in the transmission.

1. Turn the ignition switch to ON (II).

2. Clear the DTC with the HDS.

3. Block the rear wheels and raise the front of the vehicle. Make sure it is securely supported, and allow the front wheels to rotate freely, or raise the vehicle on a lift.

4. Start the engine. Disable the VSA (if equipped) by pressing the VSA OFF switch, and run the vehicle with the shift lever to D, until the vehicle speed reaches 30 mph (48 km/h), then slow down and stop the wheels.

5. Monitor the OBD STATUS for P0706 in the DTCs MENU with the HDS.

   Does the HDS indicate FAILED?

   YES—Go to step 6.

   NO—If the HDS indicates PASSED, intermittent failure, the system is OK at this time. Check for poor connections or loose terminals between the transmission range switch and the PCM. If the HDS indicates NOT COMPLETED, go to step 4.

6. Turn the ignition switch to LOCK (0).

7. Inspect the transmission range switch (see page 14-211).

   Is the transmission range switch OK?

   YES—Go to step 8.

   NO—Replace the transmission range switch (see page 14-212), then go to step 25.

8. Adjust the shift cable (see page 14-205).

9. Turn the ignition switch to ON (II).

10. Clear the DTC with the HDS.

11. Start the engine. Disable the VSA (if equipped) by pressing the VSA OFF switch, and run the vehicle with the shift lever in D, until the vehicle speed reaches 30 mph (48 km/h), then slow down and stop the wheels.

12. Monitor the OBD STATUS for P0706 in the DTCs MENU with the HDS.

    Does the HDS indicate FAILED?

    YES—Go to step 13.

    NO—If the HDS indicates PASSED, intermittent failure, the system is OK at this time. Check for poor connections or loose terminals between the transmission range switch and the PCM. If the HDS indicates NOT COMPLETED, go to step 11.

13. Shift the shift lever to D, and check the Forward Switch (ATPFWD) and A/T D Switch in the Data List with the HDS.

    Are Forward Switch (ATPFWD) and A/T D Switch ON?

    YES—Go to step 14.

    NO—Go to step 18.

14. Shift the shift lever to S, and check the Forward Switch (ATPFWD) and A/T S Switch in the Data List with the HDS.

    Are Forward Switch (ATPFWD) and A/T S Switch ON?

    YES—Go to step 15.

    NO—Go to step 18.

15. Clear the DTC with the HDS.

16. Start the engine. Disable the VSA (if equipped) by pressing the VSA OFF switch, and run the vehicle with the shift lever in D, until the vehicle speed reaches 30 mph (48 km/h), then slow down and stop the wheels.

17. Monitor the OBD STATUS for P0706 in the DTCs MENU with the HDS.

    Does the HDS indicate FAILED?

    YES—Go to step 18.

    NO—If the HDS indicates PASSED, intermittent failure, the system is OK at this time. Check for poor connections or loose terminals between the transmission range switch and the PCM. If the HDS indicates NOT COMPLETED, go to step 16.

18. Turn the ignition switch to LOCK (0).

19. Disconnect the transmission range switch connector.

20. Check for continuity between transmission range switch connector terminal No. 2 and body ground.

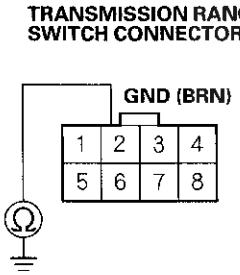

Wire side of female terminals

Is there continuity?

YES—Go to step 21.

NO—Repair open in the wire between the transmission range switch connector terminal No. 2 and body ground (G102), or repair poor body ground (G102), then go to step 25.

21. Turn the ignition switch to ON (II).

22. Measure the voltage between transmission range switch connector terminals No. 2 and No. 8.

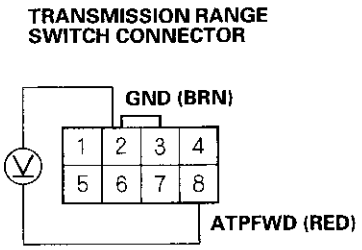

Wire side of female terminals

Is there battery voltage?

YES—Go to step 23.

NO—Repair open in the wire between transmission range switch connector terminal No. 8 and PCM connector terminal B28, then go to step 25.

23. Measure the voltage between transmission range switch connector terminals No. 2 and No. 3.

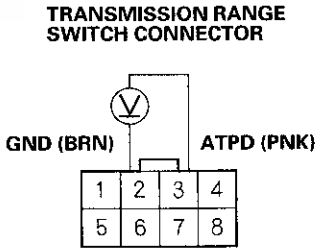

Wire side of female terminals

Is there battery voltage?

YES—Go to step 24.

NO—Repair open in the wire between transmission range switch connector terminal No. 3 and PCM connector terminal B21, then go to step 25.

(cont'd)

DTC Troubleshooting (cont'd)

24. Measure the voltage between transmission range switch connector terminals No. 2 and No. 7.

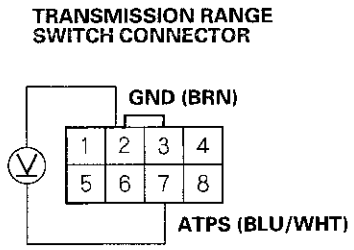

Wire side of female terminals

Is there battery voltage?

YES—Go to step 31.

NO—Repair open in the wire between transmission range switch connector terminal No. 7 and PCM connector terminal B16, then go to step 25.

25. Reconnect all connectors.

26. Turn the ignition switch to ON (II).

27. Clear the DTC with the HDS.

28. Start the engine. Disable the VSA (if equipped) by pressing the VSA OFF switch, and run the vehicle with the shift lever to D, until the vehicle speed reaches 30 mph (48 km/h), then slow down and stop the wheels.

29. Check for Temporary DTCs or DTCs with the HDS.

    Is DTC P0706 indicated?

    YES—Check for poor connections or loose terminals between the transmission range switch and the PCM, then go to step 1.

    NO—Go to step 30.

30. Monitor the OBD STATUS for P0706 in the DTCs MENU with the HDS.

    Does the HDS indicate PASSED?

    YES—Troubleshooting is complete. If any other Temporary DTCs or DTCs were indicated in step 29, go to the indicated DTC's troubleshooting. ■

    NO—If the HDS indicates FAILED, check for poor connections or loose terminals between the transmission range switch and the PCM, then go to step 1. If the HDS indicates NOT COMPLETED, go to step 28.

31. Reconnect all connectors.

32. Update the PCM if it does not have the latest software (see page 11-236), or substitute a known-good PCM (see page 11-7).

33. Start the engine. Disable the VSA (if equipped) by pressing the VSA OFF switch, and run the vehicle with the shift lever to D, until the vehicle speed reaches 30 mph (48 km/h), then slow down and stop the wheels.

34. Check for Temporary DTCs or DTCs with the HDS.

Is DTC P0706 indicated?

YES—Check for poor connections or loose terminals between the transmission range switch and the PCM. If the PCM was updated, substitute a known-good PCM (see page 11-7), then go to step 33. If the PCM was substituted, go to step 1.

NO—Go to step 35.

35. Monitor the OBD STATUS for P0706 in the DTCs MENU with the HDS.

Does the HDS indicate PASSED?

YES—If the PCM was updated, troubleshooting is complete. If the PCM was substituted, replace the original PCM (see page 11-238). If any other Temporary DTCs or DTCs were indicated in step 34, go to the indicated DTC's troubleshooting. ■

NO—If the HDS indicates FAILED, check for poor connections or loose terminals between the transmission range switch and the PCM. If the PCM was updated, substitute a known-good PCM (see page 11-7), then go to step 33. If the PCM was substituted, go to step 1. If the HDS indicates NOT COMPLETED, go to step 33.

DTC P0716: Range/Performance Problem in CVT Input Shaft (Drive Pulley) Speed Sensor Circuit

DTC P0717: Problem in CVT Input Shaft (Drive Pulley) Speed Sensor Circuit (No Signal Input)

NOTE:
- Before you troubleshoot, record all freeze data and any on-board snapshot with the HDS, and review General Troubleshooting Information (see page 14-3).
- This code is caused by an electrical circuit problem and cannot be caused by a mechanical problem in the transmission.

1. Check for proper CVT input shaft (drive pulley) speed sensor installation (see page 14-170). If the sensor is installed incorrectly, reinstall the sensor correctly, then go to step 26.

2. Turn the ignition switch to ON (II).

3. Clear the DTC with the HDS.

4. Block the rear wheels and raise the front of the vehicle. Make sure it is securely supported, and allow the front wheels to rotate freely, or raise the vehicle on a lift.

5. Start the engine. Disable the VSA (if equipped) by pressing the VSA OFF switch, and run the vehicle with the shift lever to D, at speeds over 19 mph (30 km/h) for at least 30 seconds. Slow down and stop the wheels.

6. Monitor the OBD STATUS for P0716 or P0717 in the DTCs MENU with the HDS.

Does the HDS indicate FAILED?

YES—Go to step 7.

NO—If the HDS indicates PASSED, intermittent failure, the system is OK at this time. Check for poor connections or loose terminals between the CVT input shaft (drive pulley) speed sensor and the PCM. If the HDS indicates NOT COMPLETED, go to step 5.

(cont'd)

DTC Troubleshooting (cont'd)

7. Turn the ignition switch to LOCK (0).
8. Jump the SCS line with the HDS.
9. Disconnect PCM connector C (44P).
10. Check for continuity between PCM connector terminal C40 and body ground, and between PCM connector terminal C44 and body ground.

PCM CONNECTOR C (44P)

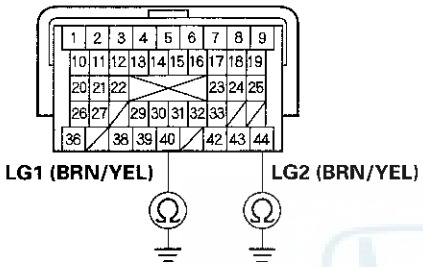

Terminal side of female terminals

Is there continuity?

YES—Go to step 11.

NO—Repair open in the wires between PCM connector terminals C40, C44, and body ground (G102), or repair poor body ground (G102), then go to step 26.

11. Connect PCM connector C (44P).
12. Disconnect the CVT input shaft (drive pulley) speed sensor connector.
13. Turn the ignition switch to ON (II).
14. Measure the voltage between CVT input shaft (drive pulley) speed sensor connector terminal No. 1 and body ground.

CVT INPUT SHAFT (DRIVE PULLEY) SPEED SENSOR CONNECTOR

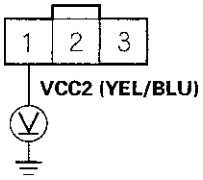

Wire side of female terminals

Is there about 5 V?

YES—Go to step 19.

NO—Go to step 15.

15. Turn the ignition switch to LOCK (0).

16. Jump the SCS line with the HDS.

17. Disconnect PCM connector B (44P).

18. Check for continuity between PCM connector terminal B18 and CVT input shaft (drive pulley) speed sensor connector terminal No. 1.

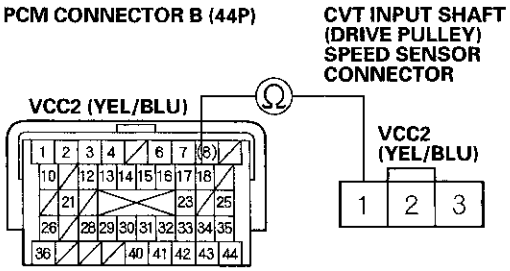

Is there continuity?

YES—Go to step 32.

NO—Repair open in the wire between PCM connector terminal B18 and the CVT input shaft (drive pulley) speed sensor connector, then go to step 26.

19. Measure the voltage between CVT input shaft (drive pulley) speed sensor connector terminals No. 2 and No. 3.

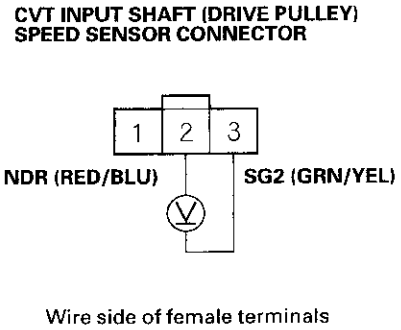

Is there about 5 V?

YES—Replace the CVT input shaft (drive pulley) speed sensor (see page 14-170), then go to step 26.

NO—Go to step 20.

(cont'd)

DTC Troubleshooting (cont'd)

20. Turn the ignition switch to LOCK (0).

21. Jump the SCS line with the HDS.

22. Disconnect PCM connector B (44P).

23. Check for continuity between CVT input shaft (drive pulley) speed sensor connector terminal No. 2 and body ground.

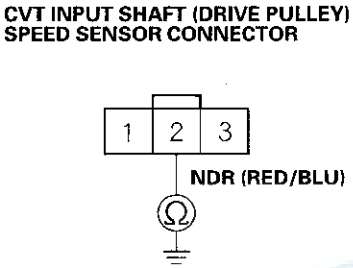

Is there continuity?

YES—Repair short to body ground in the wire between PCM connector terminal B17 and the CVT input shaft (drive pulley) speed sensor connector, then go to step 26.

NO—Go to step 24.

24. Check for continuity between PCM connector terminal B33 and CVT input shaft (drive pulley) speed sensor connector terminal No. 3.

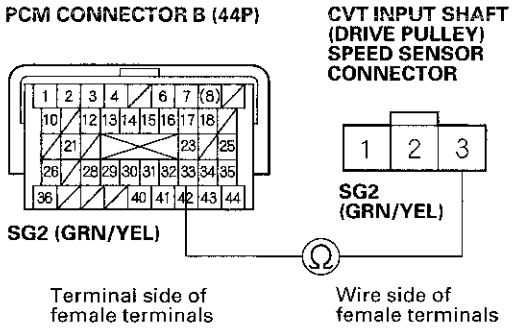

Is there continuity?

YES—Go to step 25.

NO—Repair open in the wire between the CVT input shaft (drive pulley) speed sensor connector and PCM connector terminal B33, then go to step 26.

25. Check for continuity between PCM connector terminal B17 and CVT input shaft (drive pulley) speed sensor connector terminal No. 2.

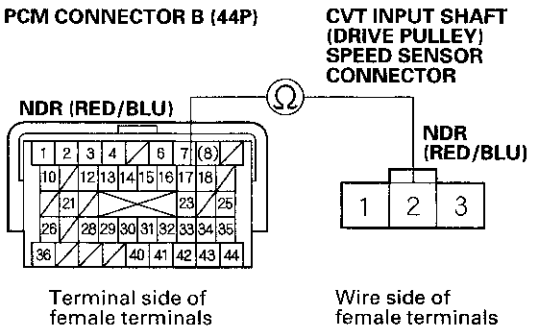

Is there continuity?

YES—Go to step 32.

NO—Repair open in the wire between PCM connector terminal B17 and the CVT input shaft (drive pulley) speed sensor connector, then go to step 26.

26. Reconnect all connectors.

27. Turn the ignition switch ON (II).

28. Clear the DTC with the HDS.

29. Start the engine, let it idle for at least 15 seconds. Run the vehicle with the shift lever to D, at speeds over 19 mph (30 km/h) for at least 30 seconds. Slow down and stop the wheels.

30. Check for Temporary DTCs or DTCs with the HDS.

Is DTC P0716 or P0717 indicated?

YES—Check for poor connections or loose terminals between the CVT input shaft (drive pulley) speed sensor and the PCM, then go to step 1.

NO—Go to step 31.

(cont'd)

DTC Troubleshooting (cont'd)

31. Monitor the OBD STATUS for P0716 or P0717 in the DTCs MENU with the HDS.

    Does the HDS indicate PASSED?

    YES—Troubleshooting is complete. If any other Temporary DTCs or DTCs were indicated in step 30, go to the indicated DTC's troubleshooting.■

    NO—If the HDS indicates FAILED, check for poor connections or loose terminals between the CVT input shaft (drive pulley) speed sensor and the PCM, then go to step 1. If the HDS indicates NOT COMPLETED, go to step 29.

32. Reconnect all connectors.

33. Update the PCM if it does not have the latest software (see page 11-236), or substitute a known-good PCM (see page 11-7).

34. Start the engine, let it idle for at least 15 seconds. Run the vehicle with the shift lever to D, at speeds over 19 mph (30 km/h) for at least 30 seconds. Slow down and stop the wheels.

35. Check for Temporary DTCs or DTCs with the HDS.

    Is DTC P0716 or P0717 indicated?

    YES—Check for poor connections or loose terminals between the CVT input shaft (drive pulley) speed sensor and the PCM. If the PCM was updated, substitute a known-good PCM (see page 11-7), then go to step 34. If the PCM was substituted, go to step 1.

    NO—Go to step 36.

36. Monitor the OBD STATUS for P0716 or P0717 in the DTCs MENU with the HDS.

    Does the HDS indicate PASSED?

    YES—If the PCM was updated, troubleshooting is complete. If the PCM was substituted, replace the original PCM (see page 11-238). If any other Temporary DTCs or DTCs were indicated in step 35, go to the indicated DTC's troubleshooting.■

    NO—If the HDS indicates FAILED, check for poor connections or loose terminals between the CVT input shaft (drive pulley) speed sensor and the PCM. If the PCM was updated, substitute a known-good PCM (see page 11-7), then go to step 34. If the PCM was substituted, go to step 1. If the HDS indicates NOT COMPLETED, go to step 34.

DTC P0721: Range/Performance Problem in CVT Output Shaft (Driven Pulley) Speed Sensor Circuit

DTC P0722: Problem in CVT Output Shaft (Driven Pulley) Speed Sensor Circuit (No Signal Input)

NOTE:
- Before you troubleshoot, record all freeze data and any on-board snapshot with the HDS, and review General Troubleshooting Information (see page 14-3).
- This code is caused by an electrical circuit problem and cannot be caused by a mechanical problem in the transmission.

1. Check for proper CVT output shaft (driven pulley) speed sensor installation (see page 14-171). If the sensor is installed incorrectly, reinstall the sensor correctly, then go to step 26.

2. Turn the ignition switch to ON (II).

3. Clear the DTC with the HDS.

4. Block the rear wheels and raise the front of the vehicle. Make sure it is securely supported, and allow the front wheels to rotate freely, or raise the vehicle on a lift.

5. Start the engine. Disable the VSA (if equipped) by pressing the VSA OFF switch, and run the vehicle with the shift lever to D, the engine speed 3,500 rpm or higher for at least 30 seconds. Slow down and stop the wheels.

6. Monitor the OBD STATUS for P0721 or P0722 in the DTCs MENU with the HDS.

   Does the HDS indicate FAILED?

   YES—Go to step 7.

   NO—If the HDS indicates PASSED, intermittent failure, the system is OK at this time. Check for poor connections or loose terminals between the CVT output shaft (driven pulley) speed sensor and the PCM. If the HDS indicates NOT COMPLETED, go to step 5.

7. Turn the ignition switch to LOCK (0).

8. Jump the SCS line with the HDS.

9. Disconnect PCM connector C (44P).

10. Check for continuity between PCM connector terminal C40 and body ground, and between PCM connector terminal C44 and body ground.

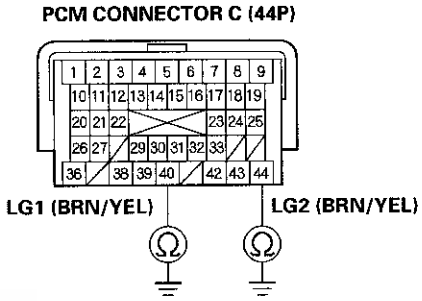

Terminal side of female terminals

Is there continuity?

YES—Go to step 11.

NO—Repair open in the wires between PCM connector terminals C40, C44, and body ground (G102), or repair poor body ground (G102), then go to step 26.

(cont'd)

DTC Troubleshooting (cont'd)

11. Connect PCM connector C (44P).

12. Disconnect the CVT output shaft (driven pulley) speed sensor connector.

13. Turn the ignition switch to ON (II).

14. Measure the voltage between CVT output shaft (driven pulley) speed sensor connector terminal No. 1 and body ground.

CVT OUTPUT SHAFT (DRIVEN PULLEY) SPEED SENSOR CONNECTOR

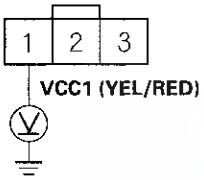

Wire side of female terminals

Is there about 5 V?

YES—Go to step 19.

NO—Go to step 15.

15. Turn the ignition switch to LOCK (0).

16. Jump the SCS line with the HDS.

17. Disconnect PCM connector C (44P).

18. Check for continuity between PCM connector terminal C13 and CVT output shaft (driven pulley) speed sensor connector terminal No. 1.

CVT OUTPUT SHAFT (DRIVEN PULLEY) SPEED SENSOR CONNECTOR

PCM CONNECTOR C (44P)

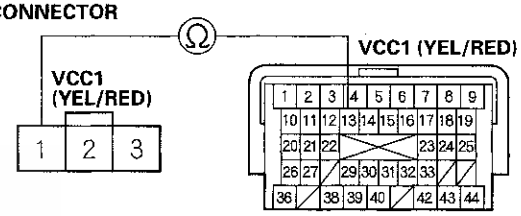

Wire side of female terminals

Terminal side of female terminals

Is there continuity?

YES—Go to step 32.

NO—Repair open in the wire between PCM connector terminal C13 and the CVT output shaft (driven pulley) speed sensor connector, then go to step 26.

19. Measure the voltage between CVT output shaft (driven pulley) speed sensor connector terminals No. 2 and No. 3.

CVT OUTPUT SHAFT (DRIVEN PULLEY) SPEED SENSOR CONNECTOR

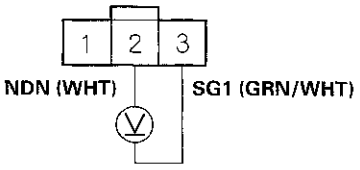

Wire side of female terminals

Is there about 5 V?

YES—Replace the CVT output shaft (driven pulley) speed sensor (see page 14-171), then go to step 26.

NO—Go to step 20.

20. Turn the ignition switch to LOCK (0).

21. Jump the SCS line with the HDS.

22. Disconnect PCM connector C (44P).

23. Check for continuity between CVT output shaft (driven pulley) speed sensor connector terminal No. 2 and body ground.

CVT OUTPUT SHAFT (DRIVEN PULLEY) SPEED SENSOR CONNECTOR

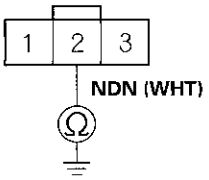

Wire side of female terminals

Is there continuity?

YES—Repair short to body ground in the wire between PCM connector terminal C10 and the CVT output shaft (driven pulley) speed sensor connector, then go to step 26.

NO—Go to step 24.

(cont'd)

DTC Troubleshooting (cont'd)

24. Check for continuity between PCM connector terminal C14 and CVT output shaft (driven pulley) speed sensor connector terminal No. 3.

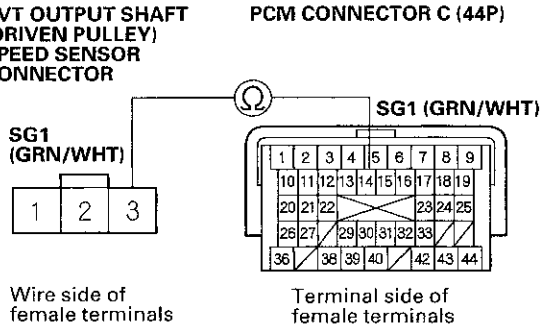

Is there continuity?

YES—Go to step 25.

NO—Repair open in the wire between the CVT output shaft (driven pulley) speed sensor connector and PCM connector terminal C14, then go to step 26.

25. Check for continuity between PCM connector terminal C10 and CVT output shaft (driven pulley) speed sensor connector terminal No. 2.

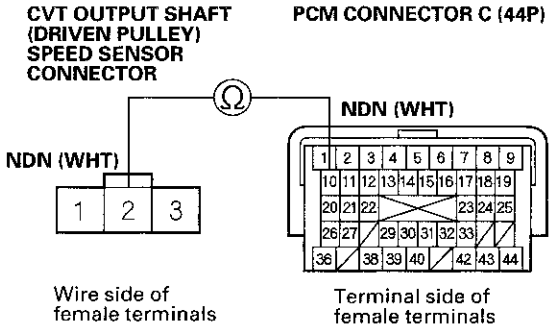

Is there continuity?

YES—Go to step 32.

NO—Repair open in the wire between PCM connector terminal C10 and the CVT output shaft (driven pulley) speed sensor connector, then go to step 26.

26. Reconnect all connectors.

27. Turn the ignition switch to ON (II).

28. Clear the DTC with the HDS.

29. Start the engine. Disable the VSA (if equipped) by pressing the VSA OFF switch, and run the vehicle with the shift lever to D, and keep the vehicle at speeds over 19 mph (30 km/h) for at least 30 seconds. Slow down and stop the wheels.

30. Check for Temporary DTCs or DTCs with the HDS.

    Is DTC P0721 or P0722 indicated?

    YES—Check for poor connections or loose terminals between the CVT output shaft (driven pulley) speed sensor and the PCM, then go to step 1.

    NO—Go to step 31.

31. Monitor the OBD STATUS for P0721 or P0722 in the DTCs MENU with the HDS.

    Does the HDS indicate PASSED?

    YES—Troubleshooting is complete. If any other Temporary DTCs or DTCs were indicated in step 30, go to the indicated DTC's troubleshooting.■

    NO—If the HDS indicates FAILED, check for poor connections or loose terminals between the CVT output shaft (driven pulley) speed sensor and the PCM, then go to step 1. If the HDS indicates NOT COMPLETED, go to step 29.

32. Reconnect all connectors.

33. Update the PCM if it does not have the latest software (see page 11-236), or substitute a known-good PCM (see page 11-7).

34. Start the engine. Disable the VSA (if equipped) by pressing the VSA OFF switch, and run the vehicle with the shift lever to D, and hold the vehicle at speeds over 19 mph (30 km/h) for at least 30 seconds. Slow down and stop the wheels.

35. Check for Temporary DTCs or DTCs with the HDS.

    Is DTC P0721 or P0722 indicated?

    YES—Check for poor connections or loose terminals between the CVT output shaft (driven pulley) speed sensor and the PCM. If the PCM was updated, substitute a known-good PCM (see page 11-7), then go to step 34. If the PCM was substituted, go to step 1.

    NO—Go to step 36.

36. Monitor the OBD STATUS for P0721 or P0722 in the DTCs MENU with the HDS.

    Does the HDS indicate PASSED?

    YES—If the PCM was updated, troubleshooting is complete. If the PCM was substituted, replace the original PCM (see page 11-238). If any other Temporary DTCs or DTCs were indicated in step 35, go to the indicated DTC's troubleshooting.■

    NO—If the HDS indicates FAILED, check for poor connections or loose terminals between the CVT output shaft (driven pulley) speed sensor and the PCM. If the PCM was updated, substitute a known-good PCM (see page 11-7), then go to step 34. If the PCM was substituted, go to step 1. If the HDS indicates NOT COMPLETED, go to step 34.

DTC Troubleshooting (cont'd)

DTC P0746: CVT Drive Pulley Pressure Control Valve Stuck OFF

NOTE: Before you troubleshoot, record all freeze data and any on-board snapshot with the HDS, and review General Troubleshooting Information (see page 14-3).

1. Turn the ignition switch to ON (II).

2. Check for Temporary DTCs or DTCs with the HDS.

   Are any other Temporary DTCs or DTCs indicated simultaneously with DTC P0746?

   YES—Go to the indicated DTC's troubleshooting, and recheck.

   NO—Go to step 3.

3. Clear the DTC with the HDS.

4. Start the engine, and warm it up until the coolant temperature reaches 176 °F (80 °C).

5. Check the IMA battery level gauge in the gauge control module (tach).

   Does the IMA battery level gauge indicate more than 4 segments?

   YES—Go to step 6.

   NO—Run the engine with the shift lever in P, at 3,500 rpm until the IMA battery level gauge indicates at least 4 segments, then go to step 6.

6. Shift the shift lever to D.

7. Keep pressing the brake pedal for 5 seconds.

8. Accelerate from a stop to full throttle, and test-drive the vehicle on a flat road for about 15 seconds. Do not release the accelerator during the test-drive.

9. Slow down to a stop. After stopping keep pressing the brake pedal for 5 seconds.

10. Check for Temporary DTCs or DTCs with the HDS.

    Is DTC P0746, P0777, or P1899 indicated?

    YES—The CVT drive pulley pressure control valve may be stuck OFF or the CVT driven pulley pressure control valve may be stuck ON:

    - DTC P0746 is indicated, replace the CVT drive pulley pressure control valve (see page 14-169).
    - DTC P0777 is indicated, replace the CVT driven pulley pressure control valve (see page 14-169).
    - DTC P1899 is indicated, replace the CVT drive pulley pressure control valve (see page 14-169) and CVT driven pulley pressure control valve (see page 14-169) as a set.

    If any part was replaced, go to step 11.

    NO—Go to step 6, and repeat the test-drive. If the HDS does not indicate a DTC after the test-drive has been done four times, the problem was an intermittent failure; the system is OK at this time.

11. Turn the ignition switch to ON (II).

12. Clear the DTC with the HDS.

13. Start the engine, and warm it up until the coolant temperature reaches 176 °F (80 °C).

14. Shift the shift lever to D.

15. Keep pressing the brake pedal for 5 seconds.

16. Accelerate from a stop at full throttle, and test-drive the vehicle on a flat road for about 15 seconds. Do not release the accelerator during the test-drive.

17. Slow down to a stop. After stopping keep pressing the brake pedal for 5 seconds.

18. Check for Temporary DTCs or DTCs with the HDS.

    Is DTC P0746 indicated?

    YES—Replace the transmission.■

    NO—Go to step 19.

19. Monitor the OBD STATUS for P0746 in the DTCs MENU with the HDS.

    Does the HDS indicate PASSED?

    YES—Troubleshooting is complete. If any other Temporary DTCs or DTCs were indicated in step 18, go to the indicated DTC's troubleshooting.■

    NO—If the HDS indicates FAILED, check for poor connections or loose terminals between the CVT drive pulley pressure control valve and the PCM, then go to step 1. If the HDS indicates NOT COMPLETED, go to step 13.

DTC P0777: CVT Driven Pulley Pressure Control Valve Stuck ON

NOTE: Before you troubleshoot, record all freeze data and any on-board snapshot with the HDS, and review General Troubleshooting Information (see page 14-3).

1. Turn the ignition switch to ON (II).

2. Check for Temporary DTCs or DTCs with the HDS.

   Are any other Temporary DTCs or DTCs indicated simultaneously with DTC P0777?

   YES—Go to the indicated DTC's troubleshooting, and recheck.

   NO—Go to step 3.

3. Clear the DTC with the HDS.

4. Start the engine, and warm it up until the coolant temperature reaches 176 °F (80 °C).

5. Check the IMA battery level gauge in the gauge control module (tach).

   Does the IMA battery level gauge indicate more than 4 segments?

   YES—Go to step 6.

   NO—Run the engine with the shift lever in P, at 3,500 rpm until the IMA battery level gauge indicates at least 4 segments, then go to step 6.

6. Shift the shift lever to D.

7. Keep pressing the brake pedal for 5 seconds.

8. Accelerate from a stop at full throttle, and test-drive the vehicle on a flat road for about 15 seconds. Do not release the accelerator during the test-drive.

9. Slow down to a stop. After stopping keep pressing the brake pedal for 5 seconds.

(cont'd)

DTC Troubleshooting (cont'd)

10. Check for Temporary DTCs or DTCs with the HDS.

    Is DTC P0746, P0777, or P1899 indicated?

    YES—The CVT driven pulley pressure control valve may be stuck ON or the CVT drive pulley pressure control valve may be stuck OFF:

    - DTC P0746 is indicated, replace the CVT drive pulley pressure control valve (see page 14-169).
    - DTC P0777 is indicated, replace the CVT driven pulley pressure control valve (see page 14-169).
    - DTC P1899 is indicated, replace the CVT drive pulley pressure control valve (see page 14-169) and CVT driven pulley pressure control valve (see page 14-169) as a set.

    If any part was replaced, go to step 11.

    NO—Go to step 6, and repeat the test-drive. If the HDS does not indicate a DTC after the test-drive has been done four times, the problem was an intermittent failure; the system is OK at this time.

11. Turn the ignition switch to ON (II).

12. Clear the DTC with the HDS.

13. Start the engine, and warm it up until the coolant temperature reaches 176 °F (80 °C).

14. Shift the shift lever to D.

15. Keep pressing the brake pedal for 5 seconds.

16. Accelerate from a stop at full throttle, and test-drive the vehicle on a flat road for about 15 seconds. Do not release the accelerator during the test-drive.

17. Slow down to a stop. After stopping keep pressing the brake pedal for 5 seconds.

18. Check for Temporary DTCs or DTCs with the HDS.

    Is DTC P0777 indicated?

    YES—Replace the transmission.■

    NO—Go to step 19.

19. Monitor the OBD STATUS for P0777 in the DTCs MENU with the HDS.

    Does the HDS indicate PASSED?

    YES—Troubleshooting is complete. If any other Temporary DTCs or DTCs were indicated in step 18, go to the indicated DTC's troubleshooting.■

    NO—If the HDS indicates FAILED, check for poor connections or loose terminals between the CVT driven pulley pressure control valve and the PCM, then go to step 1. If the HDS indicates NOT COMPLETED, go to step 13.

DTC P0780: Problem in Hydraulic Control System

NOTE:
- Before you troubleshoot, record all freeze data and any on-board snapshot with the HDS, and review General Troubleshooting Information (see page 14-3).
- This code is stored whenever DTCs P1898 and P1899 are detected.

1. Turn the ignition switch to ON (II).

2. Check for Temporary DTCs or DTCs with the HDS.

   NOTE: P0780 means DTC P1898 and/or P1899 has been stored.

   Is DTC P1898 and/or P1899 indicated?

   YES—Go to DTC P1898 (see page 14-142) and/or P1899 (see page 14-144) troubleshooting.■

   NO—Go to step 3.

3. Update the PCM if it does not have the latest software (see page 11-236), or substitute a known-good PCM (see page 11-7).

4. Start the engine and warm it up until the coolant temperature reaches 176 °F (80 °C).

5. Shift the shift lever to D.

6. Keep pressing the brake pedal for 5 seconds.

7. Accelerate from a stop until the vehicle speed reaches 40—50 mph (65—80 km/h), and test-drive the vehicle on a flat road for at least 15 seconds. Do not release the accelerator during the test-drive.

8. Slow down to a stop. After stopping keep pressing the brake pedal for 5 seconds.

9. Check for Temporary DTCs or DTCs with the HDS.

   Is DTC P0780 indicated?

   YES—Check for poor connections or loose terminals between the CVT drive pulley pressure control valve, the CVT driven pulley pressure control valve, and the PCM. If the PCM was updated, substitute a known-good PCM (see page 11-7), then go to step 4. If the PCM was substituted, go to step 1.

   NO—Go to step 10.

10. Monitor the OBD STATUS for P0780 in the DTCs MENU with the HDS.

    Does the HDS indicate PASSED?

    YES—If the PCM was updated, troubleshooting is complete. If the PCM was substituted, replace the original PCM (see page 11-238). If any other Temporary DTCs or DTCs were indicated in step 8, go to the indicated DTC's troubleshooting.■

    NO—If the HDS indicates FAILED, check for poor connections or loose terminals between the CVT drive pulley pressure control valve, the CVT driven pulley pressure control valve, and the PCM. If the PCM was updated, substitute a known-good PCM (see page 11-7), then go to step 4. If the PCM was substituted, go to step 1. If the HDS indicates NOT COMPLETED, go to step 4.

DTC Troubleshooting (cont'd)

DTC P0796: CVT Start Clutch Pressure Control Valve Stuck OFF

NOTE: Before you troubleshoot, record all freeze data and any on-board snapshot with the HDS, and review General Troubleshooting Information (see page 14-3).

'06 Model

1. Turn the ignition switch to ON (II).
2. Clear the DTC with the HDS.
3. Set the parking brake, and block the front wheels securely.
4. Start the engine, and warm it up until the coolant temperature reaches 176 °F (80 °C).
5. Firmly press the brake pedal, and shift the shift lever to D.
6. While pressing the brake pedal fully, press the accelerator for 6—8 seconds to full throttle, and measure the stall speed rpm in D.

   Does the engine speed exceed 3,500 rpm?

   YES—Replace the CVT start clutch pressure control valve (see page 14-168), then go to step 7.

   NO—Intermittent failure, the system is OK at this time. ■
7. Turn the ignition switch to ON (II).
8. Clear the DTC with the HDS.
9. Start the engine, shift the shift lever to D while pressing the brake pedal, and run the engine at idle for at least 5 seconds. Then test-drive the vehicle at speeds over 24 mph (40 km/h) for at least 15 seconds.
10. Check for Temporary DTCs or DTCs with the HDS.

    Is DTC P0796 indicated?

    YES—Replace the transmission. ■

    NO—Go to step 11.
11. Monitor the OBD STATUS for P0796 in the DTCs MENU with the HDS.

    Does the HDS indicate PASSED?

    YES—Troubleshooting is complete. If any other Temporary DTCs or DTCs were indicated in step 10, go to the indicated DTC's troubleshooting. ■

    NO—If the HDS indicates FAILED, check for poor connections or loose terminals between the CVT drive pulley pressure control valve and the PCM, then go to step 1. If the HDS indicates NOT COMPLETED, go to step 9.

DTC P0796: CVT Start Clutch Pressure Control Valve Stuck OFF

NOTE: Before you troubleshoot, record all freeze data and any on-board snapshot with the HDS, and review General Troubleshooting Information (see page 14-3).

'07-09 Models

1. Turn the ignition switch to ON(II).

2. Check for Temporary DTCs or DTCs with the HDS.

   Is DTC P0501 or P0502 indicated simultaneously with DTC P0796?

   YES—Go to the DTC P0501 troubleshooting (see page 14-75) or DTC P0502 troubleshooting (see page 14-76), and recheck.

   NO—Go to step 3.

3. Check for Temporary DTCs or DTCs with the HDS.

   Is DTC P1891 indicated simultaneously with DTC P0796?

   YES—Replace the start clutch, then go to step 11.

   NO—Go to step 4.

4. Clear the DTCs with the HDS.

5. Set the parking brake, and block the front wheels securely.

6. Start the engine, and warm it up to normal operating temperature (the radiator fan comes on).

7. Firmly press the brake pedal, and shift the shift lever to D.

8. While pressing the brake pedal fully, press the accelerator for 6—8 seconds at full throttle, and measure the stall speed rpm in D.

   Does the engine speed exceed 3,500 rpm?

   YES—Replace the CVT start clutch pressure control valve (see page 14-168), then go to step 9.

   NO—Intermittent failure, the system is OK at this time.■

9. Turn the ignition switch to ON(II).

10. Clear the DTC with the HDS.

11. Start the engine, shift the shift lever to D while pressing the brake pedal, and run the engine at idle for at least 5 seconds. Then test-drive drive the vehicle at speeds over 24 mph (40 km/h) for at least 15 seconds.

12. Check for Temporary DTCs or DTCs with the HDS.

    Is DTC P0796 indicated?

    YES—Replace the Transmission.■

    NO—Go to step 13.

13. Monitor the OBD STATUS for P0796 in the DTCs MENU with the HDS.

    Does the HDS indicate PASSED?

    YES—Troubleshooting is complete. If any other Temporary DTCs or DTCs were indicated in step 12, go to the indicated DTC's troubleshooting.■

    NO—If the HDS indicates FAILED, check for poor connections or loose terminals between the CVT drive pulley pressure control valve and the PCM, then go to step 1. If the HDS indicates NOT COMPLETED, go to step 11.

DTC Troubleshooting (cont'd)

DTC P0962: CVT Drive Pulley Pressure Control Valve Circuit Low Voltage

NOTE:
- Before you troubleshoot, record all freeze data and any on-board snapshot with the HDS, and review General Troubleshooting Information (see page 14-3).
- This code is caused by an electrical circuit problem and cannot be caused by a mechanical problem in the transmission.

1. Turn the ignition switch to ON (II).
2. Clear the DTC with the HDS.
3. Start the engine, and let it idle for at least 1 second.
4. Check for Temporary DTCs or DTCs with the HDS.

   Is DTC P0962 indicated?

   YES—Go to step 5.

   NO—Intermittent failure, the system is OK at this time. Check for poor connections or loose terminals between the PCM and the CVT drive pulley pressure control valve.■

5. Turn the ignition switch to LOCK (0).
6. Disconnect the solenoid harness connector.
7. Measure the resistance between solenoid harness connector terminals No. 3 and No. 7.

SOLENOID HARNESS CONNECTOR

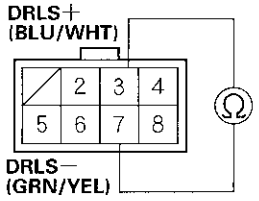

Terminal side of male terminals

Is there 3.8—6.8 Ω ?

YES—Go to step 11.

NO—Go to step 8.

8. Remove the lower valve body (see page 14-167).
9. Disconnect the CVT drive pulley pressure control valve connector.
10. Measure the resistance between CVT drive pulley pressure control valve connector terminals No. 1 and No. 2.

CVT DRIVE PULLEY PRESSURE CONTROL VALVE CONNECTOR

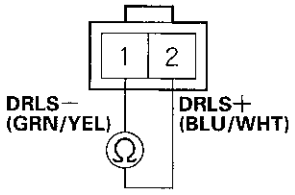

Terminal side of male terminals

Is there 3.8—6.8 Ω ?

YES—Replace the solenoid harness (see page 14-169), then go to step 15.

NO—Replace the CVT drive pulley pressure control valve (see page 14-169), then go to step 15.

11. Jump the SCS line with the HDS.

12. Disconnect PCM connector B (44P).

13. Check for continuity between PCM connector terminal B43 and body ground, and between PCM connector terminal B44 and body ground.

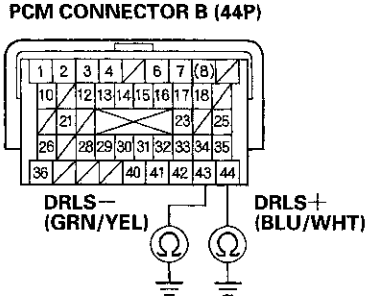

Terminal side of female terminals

Is there continuity?

YES—Repair short to body ground in the wire between PCM connector terminal B43 and solenoid harness connector terminal No. 7, or repair short to body ground in the wire between PCM connector terminal B44 and solenoid harness connector terminal No. 3, then go to step 15.

NO—Go to step 14.

14. Check for continuity between PCM connector terminal B43 and solenoid harness connector terminal No. 7, and between PCM connector terminal B44 and solenoid harness connector terminal No. 3.

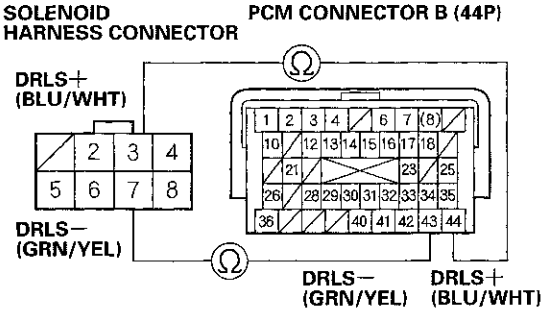

Is there continuity?

YES—Go to step 21.

NO—Repair open in the wire between PCM connector terminal B43 and solenoid harness connector terminal No. 7, or repair open in the wire between PCM connector terminal B44 and solenoid harness connector terminal No. 3, then go to step 15.

(cont'd)

DTC Troubleshooting (cont'd)

15. Reconnect all connectors.

16. Turn the ignition switch to ON (II).

17. Clear the DTC with the HDS.

18. Start the engine, and let it idle for at least 1 second.

19. Check for Temporary DTCs or DTCs with the HDS.

    Is DTC P0962 indicated?

    YES—Check for poor connections or loose terminals between the PCM and the CVT drive pulley pressure control valve, then go to step 1.

    NO—Go to step 20.

20. Monitor the OBD STATUS for P0962 in the DTCs MENU with the HDS.

    Does the HDS indicate PASSED?

    YES—Troubleshooting is complete. If any other Temporary DTCs or DTCs were indicated in step 19, go to the indicated DTC's troubleshooting.■

    NO—If the HDS indicates FAILED, check for poor connections or loose terminals between the PCM and the CVT drive pulley pressure control valve, then go to step 1. If the HDS indicates NOT COMPLETED, go to step 18.

21. Reconnect all connectors.

22. Update the PCM if it does not have the latest software (see page 11-236), or substitute a known-good PCM (see page 11-7).

23. Start the engine, and let it idle for at least 1 second.

24. Check for Temporary DTCs or DTCs with the HDS.

    Is DTC P0962 indicated?

    YES—Check for poor connections or loose terminals between the PCM and the CVT drive pulley pressure control valve. If the PCM was updated, substitute a known-good PCM (see page 11-7), then go to step 23. If the PCM was substituted, go to step 1.

    NO—Go to step 25.

25. Monitor the OBD STATUS for P0962 in the DTCs MENU with the HDS.

    Does the HDS indicate PASSED?

    YES—If the PCM was updated, troubleshooting is complete. If the PCM was substituted, replace the original PCM (see page 11-238). If any other Temporary DTCs or DTCs were indicated in step 24, go to the indicated DTC's troubleshooting.■

    NO—If the HDS indicates FAILED, check for poor connections or loose terminals between the PCM and the CVT drive pulley pressure control valve. If the PCM was updated, substitute a known-good PCM (see page 11-7), then go to step 23. If the PCM was substituted, go to step 1. If the HDS indicates NOT COMPLETED, go to step 23.

DTC P0963: CVT Drive Pulley Pressure Control Valve Circuit High Voltage

NOTE:
- Before you troubleshoot, record all freeze data and any on-board snapshot with the HDS, and review General Troubleshooting Information (see page 14-3).
- This code is caused by an electrical circuit problem and cannot be caused by a mechanical problem in the transmission.

1. Turn the ignition switch to ON (II).
2. Clear the DTC with the HDS.
3. Start the engine, and let it idle for at least 1 second.
4. Check for Temporary DTCs or DTCs with the HDS.

   Is DTC P0963 indicated?

   YES—Go to step 5.

   NO—Intermittent failure, the system is OK at this time. Check for poor connections or loose terminals between the PCM and the CVT drive pulley pressure control valve. ■

5. Turn the ignition switch to LOCK (0).
6. Disconnect the solenoid harness connector.
7. Measure the resistance between solenoid harness connector terminals No. 3 and No. 7.

SOLENOID HARNESS CONNECTOR

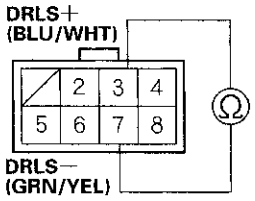

Terminal side of male terminals

Is there 3.8−6.8 Ω ?

YES—Go to step 11.

NO—Go to step 8.

8. Remove the lower valve body (see page 14-167).
9. Disconnect the CVT drive pulley pressure control valve connector.
10. Measure the resistance between CVT drive pulley pressure control valve connector terminals No. 1 and No. 2.

CVT DRIVE PULLEY PRESSURE CONTROL VALVE CONNECTOR

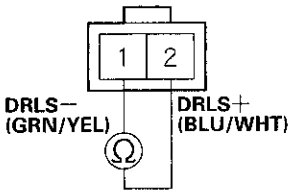

Terminal side of male terminals

Is there 3.8−6.8 Ω ?

YES—Replace the solenoid harness (see page 14-169), then go to step 18.

NO—Replace the CVT drive pulley pressure control valve (see page 14-169), then go to step 18.

(cont'd)

DTC Troubleshooting (cont'd)

11. Jump the SCS line with the HDS.

12. Disconnect PCM connector B (44P).

13. Turn the ignition switch to ON (II).

14. Measure the voltage between PCM connector terminal B43 and body ground, and between PCM connector terminal B44 and body ground.

PCM CONNECTOR B (44P)

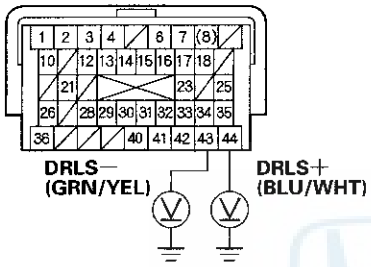

Terminal side of female terminals

Is there voltage?

YES—Repair short to power in the wire between PCM connector terminal B43 and solenoid harness connector terminal No. 7, or repair short to power in the wire between PCM connector terminal B44 and solenoid harness connector terminal No. 3, then go to step 18.

NO—Go to step 15.

15. Turn the ignition switch to LOCK (0).

16. Check for continuity between PCM connector terminal B43 and body ground, and between PCM connector terminal B44 and body ground.

PCM CONNECTOR B (44P)

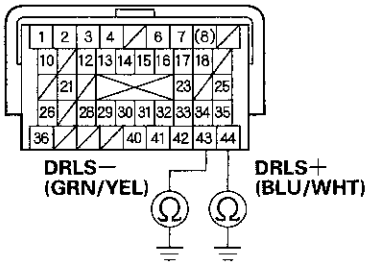

Terminal side of female terminals

Is there continuity?

YES—Repair short to body ground in the wire between PCM connector terminal B43 and solenoid harness connector terminal No. 7, or repair short to body ground in the wire between PCM connector terminal B44 and solenoid harness connector terminal No. 3, then go to step 18.

NO—Go to step 17.

17. Check for continuity between following PCM connector terminals B6, B40, and body ground individually:

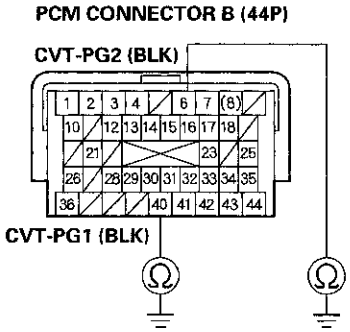

Terminal side of female terminals

Is there continuity?

YES—Go to step 24.

NO—Repair open in the wires between PCM connector terminals B6, B40, and body ground (G101), or repair poor body ground (G101). ■

18. Reconnect all connectors.

19. Turn the ignition switch to ON (II).

20. Clear the DTC with the HDS.

21. Start the engine, and let it idle for at least 1 second.

22. Check for Temporary DTCs or DTCs with the HDS.

Is DTC P0963 indicated?

YES—Check for poor connections or loose terminals between the PCM and the CVT drive pulley pressure control valve, then go to step 1.

NO—Go to step 23.

23. Monitor the OBD STATUS for P0963 in the DTCs MENU with the HDS.

Does the HDS indicate PASSED?

YES—Troubleshooting is complete. If any other Temporary DTCs or DTCs were indicated in step 22, go to the indicated DTC's troubleshooting. ■

NO—If the HDS indicates FAILED, check for poor connections or loose terminals between the PCM and the CVT drive pulley pressure control valve, then go to step 1. If the HDS indicates NOT COMPLETED, go to step 21.

24. Reconnect all connectors.

25. Update the PCM if it does not have the latest software (see page 11-236), or substitute a known-good PCM (see page 11-7).

26. Start the engine, and let it idle for at least 1 second.

(cont'd)

DTC Troubleshooting (cont'd)

27. Check for Temporary DTCs or DTCs with the HDS.

    Is DTC P0963 indicated?

    YES—Check for poor connections or loose terminals between the PCM and the CVT drive pulley pressure control valve. If the PCM was updated, substitute a known-good PCM (see page 11-7), then go to step 26. If the PCM was substituted, go to step 1.

    NO—Go to step 28.

28. Monitor the OBD STATUS for P0963 in the DTCs MENU with the HDS.

    Does the HDS indicate PASSED?

    YES—If the PCM was updated, troubleshooting is complete. If the PCM was substituted, replace the original PCM (see page 11-238). If any other Temporary DTCs or DTCs were indicated in step 27, go to the indicated DTC's troubleshooting. ■

    NO—If the HDS indicates FAILED, check for poor connections or loose terminals between the PCM and the CVT drive pulley pressure control valve. If the PCM was updated, substitute a known-good PCM (see page 11-7), then go to step 26. If the PCM was substituted, go to step 1. If the HDS indicates NOT COMPLETED, go to step 26.

DTC P0966: CVT Driven Pulley Pressure Control Valve Circuit Low Voltage

NOTE:
- Before you troubleshoot, record all freeze data and any on-board snapshot with the HDS, and review General Troubleshooting Information (see page 14-3).
- This code is caused by an electrical circuit problem and cannot be caused by a mechanical problem in the transmission.

1. Turn the ignition switch to ON (II).
2. Clear the DTC with the HDS.
3. Start the engine, and let it idle for at least 1 second.
4. Check for Temporary DTCs or DTCs with the HDS.

   Is DTC P0966 indicated?

   YES—Go to step 5.

   NO—Intermittent failure, the system is OK at this time. Check for poor connections or loose terminals between the PCM and the CVT driven pulley pressure control valve. ■

5. Turn the ignition switch to LOCK (0).
6. Disconnect the solenoid harness connector.
7. Measure the resistance between solenoid harness connector terminals No. 2 and No. 6.

SOLENOID HARNESS CONNECTOR

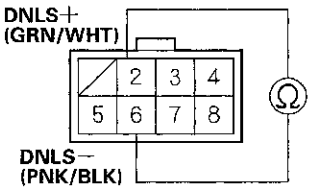

Terminal side of male terminals

Is there 3.8—6.8 Ω ?

YES—Go to step 11.

NO—Go to step 8.

8. Remove the lower valve body (see page 14-167).

9. Disconnect the CVT driven pulley pressure control valve connector.

10. Measure the resistance between CVT driven pulley pressure control valve connector terminals No. 1 and No. 2.

CVT DRIVEN PULLEY PRESSURE CONTROL VALVE CONNECTOR

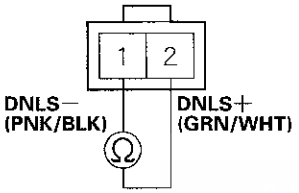

Terminal side of male terminals

Is there 3.8−6.8 Ω ?

YES—Replace the solenoid harness (see page 14-169), then go to step 15.

NO—Replace the CVT driven pulley pressure control valve (see page 14-169), then go to step 15.

11. Jump the SCS line with the HDS.

12. Disconnect PCM connector B (44P).

13. Check for continuity between PCM connector terminal B35 and body ground, and between PCM connector terminal B42 and body ground.

PCM CONNECTOR B (44P)

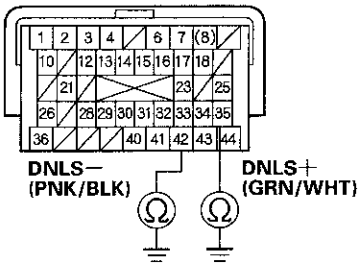

Terminal side of female terminals

Is there continuity?

YES—Repair short to body ground in the wire between PCM connector terminal B35 and solenoid harness connector terminal No. 2, or repair short to body ground in the wire between PCM connector terminal B42 and solenoid harness connector terminal No. 6, then go to step 15.

NO—Go to step 14.

(cont'd)

DTC Troubleshooting (cont'd)

14. Check for continuity between PCM connector terminal B35 and solenoid harness connector terminal No. 2, and between PCM connector terminal B42 and solenoid harness connector terminal No. 6.

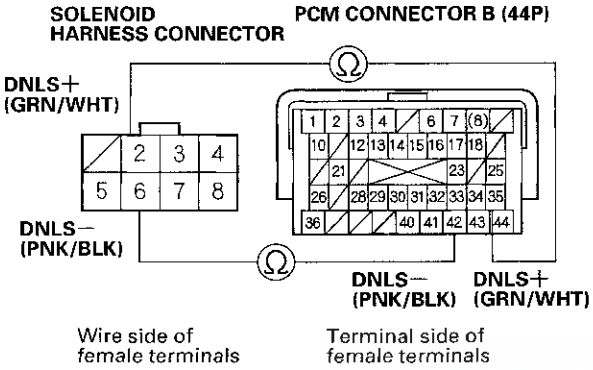

Is there continuity?

YES—Go to step 21.

NO—Repair open in the wire between PCM connector terminal B35 and solenoid harness connector terminal No. 2, or repair open in the wire between PCM connector terminal B42 and solenoid harness connector terminal No. 6, then go to step 15.

15. Reconnect all connectors.

16. Turn the ignition switch to ON (II).

17. Clear the DTC with the HDS.

18. Start the engine, and let it idle for at least 1 second.

19. Check for Temporary DTCs or DTCs with the HDS.

    Is DTC P0966 indicated?

    YES—Check for poor connections or loose terminals between the PCM and the CVT driven pulley pressure control valve, then go to step 1.

    NO—Go to step 20.

20. Monitor the OBD STATUS for P0966 in the DTCs MENU with the HDS.

    Does the HDS indicate PASSED?

    YES—Troubleshooting is complete. If any other Temporary DTCs or DTCs were indicated in step 19, go to the indicated DTC's troubleshooting.■

    NO—If the HDS indicates FAILED, check for poor connections or loose terminals between the PCM and the CVT driven pulley pressure control valve, then go to step 1. If the HDS indicates NOT COMPLETED, go to step 18.

21. Reconnect all connectors.

22. Update the PCM if it does not have the latest software (see page 11-236), or substitute a known-good PCM (see page 11-7).

23. Start the engine, and let it idle for at least 1 second.

24. Check for Temporary DTCs or DTCs with the HDS.

    Is DTC P0966 indicated?

    YES—Check for poor connections or loose terminals between the PCM and the CVT driven pulley pressure control valve. If the PCM was updated, substitute a known-good PCM (see page 11-7), then go to step 23. If the PCM was substituted, go to step 1.

    NO—Go to step 25.

25. Monitor the OBD STATUS for P0966 in the DTCs MENU with the HDS.

    Does the HDS indicate PASSED?

    YES—If the PCM was updated, troubleshooting is complete. If the PCM was substituted, replace the original PCM (see page 11-238). If any other Temporary DTCs or DTCs were indicated in step 24, go to the indicated DTC's troubleshooting. ■

    NO—If the HDS indicates FAILED, check for poor connections or loose terminals between the PCM and the CVT driven pulley pressure control valve. If the PCM was updated, substitute a known-good PCM (see page 11-7), then go to step 23. If the PCM was substituted, go to step 1. If the HDS indicates NOT COMPLETED, go to step 23.

DTC P0967: CVT Driven Pulley Pressure Control Valve Circuit High Voltage

NOTE:
- Before you troubleshoot, record all freeze data and any on-board snapshot with the HDS, and review General Troubleshooting Information (see page 14-3).
- This code is caused by an electrical circuit problem and cannot be caused by a mechanical problem in the transmission.

1. Turn the ignition switch to ON (II).
2. Clear the DTC with the HDS.
3. Start the engine, and let it idle for at least 1 second.
4. Check for Temporary DTCs or DTCs with the HDS.

   Is DTC P0967 indicated?

   YES—Go to step 5.

   NO—Intermittent failure, the system is OK at this time. Check for poor connections or loose terminals between the PCM and the CVT driven pulley pressure control valve. ■

5. Turn the ignition switch to LOCK (0).
6. Disconnect the solenoid harness connector.
7. Measure the resistance between solenoid harness connector terminals No. 2 and No. 6.

SOLENOID HARNESS CONNECTOR

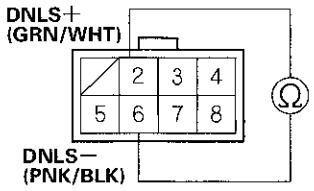

Terminal side of male terminals

Is there 3.8—6.8 Ω ?

YES—Go to step 11.

NO—Go to step 8.

(cont'd)

DTC Troubleshooting (cont'd)

8. Remove the lower valve body (see page 14-167).

9. Disconnect the CVT driven pulley pressure control valve connector.

10. Measure the resistance between CVT driven pulley pressure control valve connector terminals No. 1 and No. 2.

CVT DRIVEN PULLEY PRESSURE CONTROL VALVE CONNECTOR

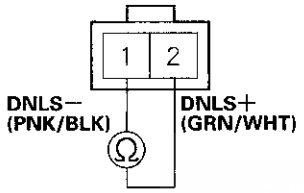

Terminal side of male terminals

Is there 3.8−6.8 Ω ?

YES—Replace the solenoid harness (see page 14-169), then go to step 18.

NO—Replace the CVT driven pulley pressure control valve (see page 14-169), then go to step 18.

11. Jump the SCS line with the HDS.

12. Disconnect PCM connector B (44P).

13. Turn the ignition switch to ON (II).

14. Measure the voltage between PCM connector terminal B35 and body ground, and between PCM connector terminal B42 and body ground.

PCM CONNECTOR B (44P)

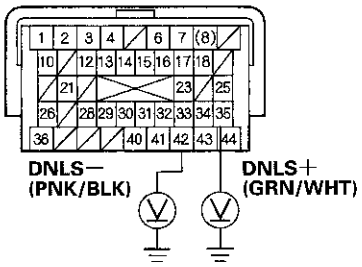

Terminal side of female terminals

Is there voltage?

YES—Repair short to power in the wire between PCM connector terminal B35 and solenoid harness connector terminal No. 2, or repair short to power in the wire between PCM connector terminal B42 and solenoid harness connector terminal No. 6, then go to step 18.

NO—Go to step 15.

15. Turn the ignition switch to LOCK (0).

16. Check for continuity between PCM connector terminal B35 and body ground, and between PCM connector terminal B42 and body ground.

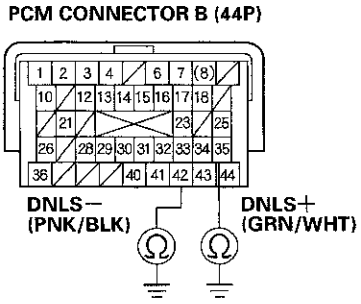

Terminal side of female terminals

Is there continuity?

YES—Repair short to body ground in the wire between PCM connector terminal B35 and solenoid harness connector terminal No. 2, or repair short to body ground in the wire between PCM connector terminal B42 and solenoid harness connector terminal No. 6, then go to step 18.

NO—Go to step 17.

17. Check for continuity between the following PCM connector terminals B6, B40, and body ground individually.

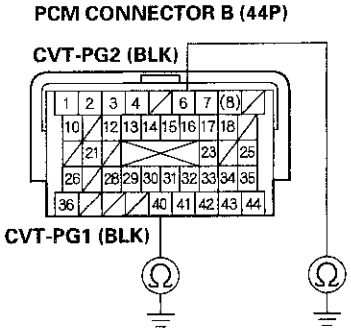

Terminal side of female terminals

Is there continuity?

YES—Go to step 24.

NO—Repair open in the wires between PCM connector terminals B6, B40, and body ground (G101), or repair poor body ground (G101).■

(cont'd)

DTC Troubleshooting (cont'd)

18. Reconnect all connectors.

19. Turn the ignition switch to ON (II).

20. Clear the DTC with the HDS.

21. Start the engine, and let it idle for at least 1 second.

22. Check for Temporary DTCs or DTCs with the HDS.

    Is DTC P0967 indicated?

    YES—Check for poor connections or loose terminals between the PCM and the CVT driven pulley pressure control valve, then go to step 1.

    NO—Go to step 23.

23. Monitor the OBD STATUS for P0967 in the DTCs MENU with the HDS.

    Does the HDS indicate PASSED?

    YES—Troubleshooting is complete. If any other Temporary DTCs or DTCs were indicated in step 22, go to the indicated DTC's troubleshooting. ■

    NO—If the HDS indicates FAILED, check for poor connections or loose terminals between the PCM and the CVT driven pulley pressure control valve, then go to step 1. If the HDS indicates NOT COMPLETED, go to step 21.

24. Reconnect all connectors.

25. Update the PCM if it does not have the latest software (see page 11-236), or substitute a known-good PCM (see page 11-7).

26. Start the engine, and let it idle for at least 1 second.

27. Check for Temporary DTCs or DTCs with the HDS.

    Is DTC P0967 indicated?

    YES—Check for poor connections or loose terminals between the PCM and the CVT driven pulley pressure control valve. If the PCM was updated, substitute a known-good PCM (see page 11-7), then go to step 26. If the PCM was substituted, go to step 1.

    NO—Go to step 28.

28. Monitor the OBD STATUS for P0967 in the DTCs MENU with the HDS.

    Does the HDS indicate PASSED?

    YES—If the PCM was updated, troubleshooting is complete. If the PCM was substituted, replace the original PCM (see page 11-238). If any other Temporary DTCs or DTCs were indicated in step 27, go to the indicated DTC's troubleshooting. ■

    NO—If the HDS indicates FAILED, check for poor connections or loose terminals between the PCM and the CVT driven pulley pressure control valve. If the PCM was updated, substitute a known-good PCM (see page 11-7), then go to step 26. If the PCM was substituted, go to step 1. If the HDS indicates NOT COMPLETED, go to step 26.

DTC P0970: CVT Start Clutch Pressure Control Valve Circuit Low Voltage

NOTE:
- Before you troubleshoot, record all freeze data and any on-board snapshot with the HDS, and review General Troubleshooting Information (see page 14-3).
- This code is caused by an electrical circuit problem and cannot be caused by a mechanical problem in the transmission.

1. Turn the ignition switch to ON (II).

2. Clear the DTC with the HDS.

3. Start the engine. Shift the shift lever to D while pressing the brake pedal, and keep the shift lever in D for at least 1 second.

4. Check for Temporary DTCs or DTCs with the HDS.

   Is DTC P0970 indicated?

   YES—Go to step 5.

   NO—Intermittent failure, the system is OK at this time. Check for poor connections or loose terminals between the PCM and the CVT start clutch pressure control valve. ■

5. Turn the ignition switch to LOCK (0).

6. Disconnect the solenoid harness connector.

7. Measure the resistance between solenoid harness connector terminals No. 4 and No. 8.

SOLENOID HARNESS CONNECTOR

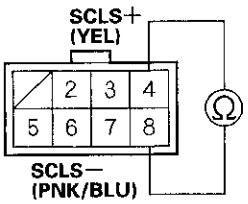

Terminal side of male terminals

Is there 3.8−6.8 Ω ?

YES—Go to step 11.

NO—Go to step 8.

8. Remove the lower valve body (see page 14-167).

9. Disconnect the CVT start clutch pressure control valve connector.

10. Measure the resistance between CVT start clutch pressure control valve connector terminals No. 1 and No. 2.

CVT START CLUTCH PRESSURE CONTROL VALVE CONNECTOR

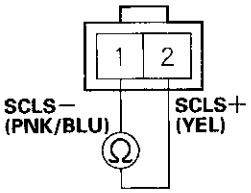

Terminal side of male terminals

Is there 3.8−6.8 Ω ?

YES—Replace the solenoid harness (see page 14-169), then go to step 15.

NO—Replace the CVT start clutch pressure control valve (see page 14-168), then go to step 15.

(cont'd)

DTC Troubleshooting (cont'd)

11. Jump the SCS line with the HDS.

12. Disconnect PCM connector B (44P).

13. Check for continuity between PCM connector terminal B25 and body ground, and between PCM connector terminal B41 and body ground.

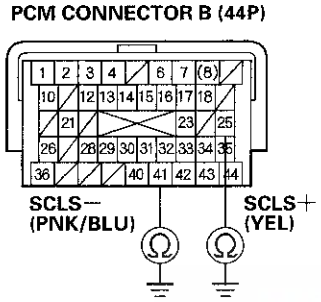

Terminal side of female terminals

Is there continuity?

YES—Repair short to body ground in the wire between PCM connector terminal B25 and solenoid harness connector terminal No. 4, or repair short to body ground in the wire between PCM connector terminal B41 and solenoid harness connector terminal No. 8, then go to step 15.

NO—Go to step 14.

14. Check for continuity between PCM connector terminal B25 and solenoid harness connector terminal No. 4, and between PCM connector terminal B41 and solenoid harness connector terminal No. 8.

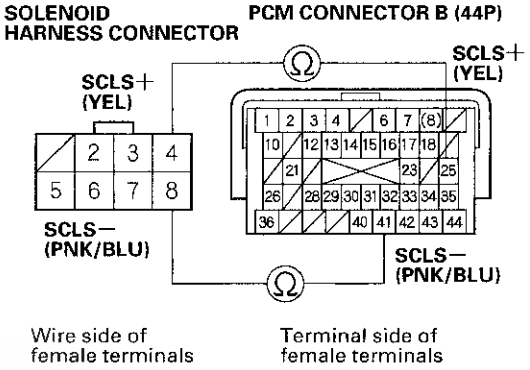

Is there continuity?

YES—Go to step 21.

NO—Repair open in the wire between PCM connector terminal B25 and solenoid harness connector terminal No. 4, or repair open in the wire between PCM connector terminal B41 and solenoid harness connector terminal No. 8, then go to step 15.

15. Reconnect all connectors.

16. Turn the ignition switch to ON (II).

17. Clear the DTC with the HDS.

18. Start the engine. Shift the shift lever to D while pressing the brake pedal, and keep the shift lever in D for at least 1 second.

19. Check for Temporary DTCs or DTCs with the HDS.

    Is DTC P0970 indicated?

    YES—Check for poor connections or loose terminals between the PCM and the CVT start clutch pressure control valve, then go to step 1.

    NO—Go to step 20.

20. Monitor the OBD STATUS for P0970 in the DTCs MENU with the HDS.

    Does the HDS indicate PASSED?

    YES—Troubleshooting is complete. If any other Temporary DTCs or DTCs were indicated in step 19, go to the indicated DTC's troubleshooting.■

    NO—If the HDS indicates FAILED, check for poor connections or loose terminals between the PCM and the CVT start clutch pressure control valve, then go to step 1. If the HDS indicates NOT COMPLETED, go to step 18.

21. Reconnect all connectors.

22. Update the PCM if it does not have the latest software (see page 11-236), or substitute a known-good PCM (see page 11-7).

23. Start the engine. Shift the shift lever to D while pressing the brake pedal, and keep the shift lever in D for at least 1 second.

24. Check for Temporary DTCs or DTCs with the HDS.

    Is DTC P0970 indicated?

    YES—Check for poor connections or loose terminals between the PCM and the CVT start clutch pressure control valve. If the PCM was updated, substitute a known-good PCM (see page 11-7), then go to step 23. If the PCM was substituted, go to step 1.

    NO—Go to step 25.

25. Monitor the OBD STATUS for P0970 in the DTCs MENU with the HDS.

    Does the HDS indicate PASSED?

    YES—If the PCM was updated, troubleshooting is complete. If the PCM was substituted, replace the original PCM (see page 11-238). If any other Temporary DTCs or DTCs were indicated in step 24, go to the indicated DTC's troubleshooting.■

    NO—If the HDS indicates FAILED, check for poor connections or loose terminals between the PCM and the CVT start clutch pressure control valve. If the PCM was updated, substitute a known-good PCM (see page 11-7), then go to step 23. If the PCM was substituted, go to step 1. If the HDS indicates NOT COMPLETED, go to step 23.

DTC Troubleshooting (cont'd)

DTC P0971: CVT Start Clutch Pressure Control Valve Circuit High Voltage

NOTE:
- Before you troubleshoot, record all freeze data and any on-board snapshot with the HDS, and review General Troubleshooting Information (see page 14-3).
- This code is caused by an electrical circuit problem and cannot be caused by a mechanical problem in the transmission.

1. Turn the ignition switch to ON (II).

2. Clear the DTC with the HDS.

3. Start the engine. Shift the shift lever to D while pressing the brake pedal, and keep the shift lever in D for at least 1 second.

4. Check for Temporary DTCs or DTCs with the HDS.

   Is DTC P0971 indicated?

   YES—Go to step 5.

   NO—Intermittent failure, the system is OK at this time. Check for poor connections or loose terminals between the PCM and the CVT start clutch pressure control valve.■

5. Turn the ignition switch to LOCK (0).

6. Disconnect the solenoid harness connector.

7. Measure the resistance between solenoid harness connector terminals No. 4 and No. 8.

SOLENOID HARNESS CONNECTOR

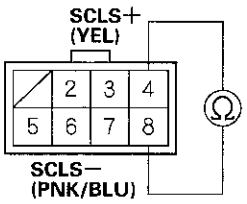

Terminal side of male terminals

Is there 3.8−6.8 Ω ?

YES—Go to step 11.

NO—Go to step 8.

8. Remove the lower valve body (see page 14-167).

9. Disconnect the CVT start clutch pressure control valve connector.

10. Measure the resistance between CVT start clutch pressure control valve connector terminals No. 1 and No. 2.

CVT START CLUTCH PRESSURE CONTROL VALVE CONNECTOR

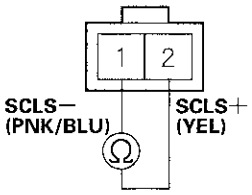

Terminal side of male terminals

Is there 3.8−6.8 Ω ?

YES—Replace the solenoid harness (see page 14-168), then go to step 18.

NO—Replace the CVT start clutch pressure control valve (see page 14-168), then go to step 18.

11. Jump the SCS line with the HDS.

12. Disconnect PCM connector B (44P).

13. Turn the ignition switch to ON (II).

14. Measure the voltage between PCM connector terminal B25 and body ground, and between PCM connector terminal B41 and body ground.

PCM CONNECTOR B (44P)

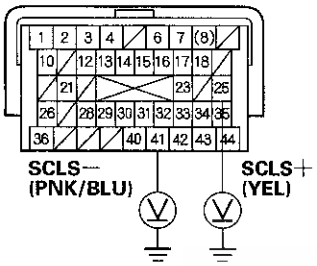

Terminal side of female terminals

Is there voltage?

YES—Repair short to power in the wire between PCM connector terminal B25 and solenoid harness connector terminal No. 4, or repair short to power in the wire between PCM connector terminal B41 and solenoid harness connector terminal No. 8, then go to step 18.

NO—Go to step 15.

15. Turn the ignition switch to LOCK (0).

16. Check for continuity between PCM connector terminal B25 and body ground, and between PCM connector terminal B41 and body ground.

PCM CONNECTOR B (44P)

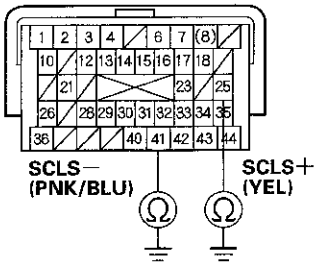

Terminal side of female terminals

Is there continuity?

YES—Repair short to body ground in the wire between PCM connector terminal B25 and solenoid harness connector terminal No. 4, or repair short to body ground in the wire between PCM connector terminal B41 and solenoid harness connector terminal No. 8, then go to step 18.

NO—Go to step 17.

(cont'd)

DTC Troubleshooting (cont'd)

17. Check for continuity between following PCM connector terminals B6, B40, and body ground individually.

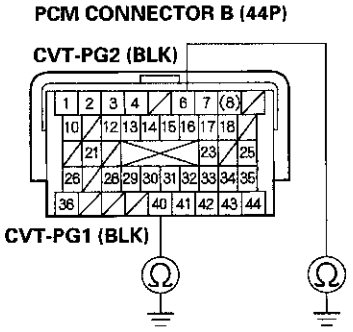

Terminal side of female terminals

Is there continuity?

YES—Go to step 24.

NO—Repair open in the wires between PCM connector terminals B6, B40, and body ground (G101), or repair poor body ground (G101).■

18. Reconnect all connectors.

19. Turn the ignition switch to ON (II).

20. Clear the DTC with the HDS.

21. Start the engine. Shift the shift lever to D while pressing the brake pedal, and keep the shift lever in D for at least 1 second.

22. Check for Temporary DTCs or DTCs with the HDS.

Is DTC P0971 indicated?

YES—Check for poor connections or loose terminals between the PCM and the CVT start clutch pressure control valve, then go to step 1.

NO—Go to step 23.

23. Monitor the OBD STATUS for P0971 in the DTCs MENU with the HDS.

Does the HDS indicate PASSED?

YES—Troubleshooting is complete. If any other Temporary DTCs or DTCs were indicated in step 22, go to the indicated DTC's troubleshooting.■

NO—If the HDS indicates FAILED, check for poor connections or loose terminals between the PCM and the CVT start clutch pressure control valve, then go to step 1. If the HDS indicates NOT COMPLETED, go to step 21.

24. Reconnect all connectors.

25. Update the PCM if it does not have the latest software (see page 11-236), or substitute a known-good PCM (see page 11-7).

26. Start the engine. Shift the shift lever to D while pressing the brake pedal, and keep the shift lever in D for at least 1 second.

27. Check for Temporary DTCs or DTCs with the HDS.

    Is DTC P0971 indicated?

    YES—Check for poor connections or loose terminals between the PCM and the CVT start clutch pressure control valve. If the PCM was updated, substitute a known-good PCM (see page 11-7), then go to step 26. If the PCM was substituted, go to step 1.

    NO—Go to step 28.

28. Monitor the OBD STATUS for P0971 in the DTCs MENU with the HDS.

    Does the HDS indicate PASSED?

    YES—If the PCM was updated, troubleshooting is complete. If the PCM was substituted, replace the original PCM (see page 11-238). If any other Temporary DTCs or DTCs were indicated in step 27, go to the indicated DTC's troubleshooting. ■

    NO—If the HDS indicates FAILED, check for poor connections or loose terminals between the PCM and the CVT start clutch pressure control valve. If the PCM was updated, substitute a known-good PCM (see page 11-7), then go to step 26. If the PCM was substituted, go to step 1. If the HDS indicates NOT COMPLETED, go to step 26.

DTC P16C0: PCM CVT Control System Incomplete Update

NOTE:
- Before you troubleshoot, record all freeze data and any on-board snapshot with the HDS, and review General Troubleshooting Information (see page 14-3).
- This code is indicated when PCM updating is incomplete.
- Do not turn the ignition switch to LOCK (0) or ACCESSORY (I) while updating the PCM. If you turn the ignition switch to LOCK (0) or ACCESSORY (I) before completion, the PCM can be damaged.

1. Update the PCM (see page 11-236).

2. Check for Temporary DTCs or DTCs with the HDS.

   Is DTC P16C0 indicated?

   YES—Replace the original PCM (see page 11-238). ■

   NO—Troubleshooting is complete. ■

DTC Troubleshooting (cont'd)

DTC P16D7: PCM Internal F-CAN Communication Circuit Malfunction

NOTE: Before you troubleshoot, record all freeze data and any on-board snapshot with the HDS, and review General Troubleshooting Information (see page 14-3).

1. Turn the ignition switch to ON (II).
2. Clear the DTC with the HDS.
3. Check for Temporary DTCs or DTCs with the HDS.

   Is DTC P16D7 indicated?

   YES—Go to step 4.

   NO—Intermittent failure, the system is OK at this time. ■

4. Update the PCM if it does not have the latest software (see page 11-236), or substitute a known-good PCM (see page 11-7).
5. Start the engine, and let it idle for at least 2 minutes.
6. Check for Temporary DTCs or DTCs with the HDS.

   Is DTC P16D7 indicated?

   YES—Check for poor connections or loose terminals at the PCM. If the PCM was updated, substitute a known-good PCM (see page 11-7), then recheck. If the PCM was substituted, go to step 1.

   NO—Go to step 7.

7. Monitor the OBD STATUS for P16D7 in the DTCs MENU with the HDS.

   Does the HDS indicate PASSED?

   YES—If the PCM was updated, troubleshooting is complete. If the PCM was substituted, replace the original PCM (see page 11-238). If any other Temporary DTCs or DTCs were indicated in step 6, go to the indicated DTC's troubleshooting. ■

   NO—If the HDS indicates FAILED, check for poor connections or loose terminals at the PCM. If the PCM was updated, substitute a known-good PCM (see page 11-7), then go to step 5. If the PCM was substituted, go to step 1. If the HDS indicates NOT COMPLETED, go to step 5.

DTC P16D8: PCM Internal IMA CAN Communication Circuit Malfunction

NOTE: Before you troubleshoot, record all freeze data and any on-board snapshot with the HDS, and review General Troubleshooting Information (see page 14-3).

1. Turn the ignition switch to ON (II).
2. Clear the DTC with the HDS.
3. Check for Temporary DTCs or DTCs with the HDS.

   Is DTC P16D8 indicated?

   YES—Go to step 4.

   NO—Intermittent failure, the system is OK at this time. ■

4. Update the PCM if it does not have the latest software (see page 11-236), or substitute a known-good PCM (see page 11-7).
5. Start the engine, and let it idle for at least 2 minutes.
6. Check for Temporary DTCs or DTCs with the HDS.

   Is DTC P16D8 indicated?

   YES—Check for poor connections or loose terminals at the PCM. If the PCM was updated, substitute a known-good PCM (see page 11-7), then recheck. If the PCM was substituted, go to step 1.

   NO—Go to step 7.

7. Monitor the OBD STATUS for P16D8 in the DTCs MENU with the HDS.

   Does the HDS indicate PASSED?

   YES—If the PCM was updated, troubleshooting is complete. If the PCM was substituted, replace the original PCM (see page 11-238). If any other Temporary DTCs or DTCs were indicated in step 6, go to the indicated DTC's troubleshooting. ■

   NO—If the HDS indicates FAILED, check for poor connections or loose terminals at the PCM. If the PCM was updated, substitute a known-good PCM (see page 11-7), then go to step 5. If the PCM was substituted, go to step 1. If the HDS indicates NOT COMPLETED, go to step 5.

DTC P1860: Inhibitor Solenoid Circuit Low Voltage

NOTE:
- Before you troubleshoot, record all freeze data and any on-board snapshot with the HDS, and review General Troubleshooting Information (see page 14-3).
- This code is caused by an electrical circuit problem and cannot be caused by a mechanical problem in the transmission.

1. Turn the ignition switch to ON (II).

2. Clear the DTC with the HDS.

3. Select Inhibitor Solenoid Test in the Miscellaneous Test Menu with the HDS.

4. Check for Temporary DTCs or DTCs with the HDS.

   Is DTC P1860 indicated?

   YES—Go to step 5.

   NO—Intermittent failure, the system is OK at this time. Check for poor connections or loose terminals between the PCM and the inhibitor solenoid. ■

5. Turn the ignition switch to LOCK (0).

6. Disconnect the solenoid harness connector.

(cont'd)

DTC Troubleshooting (cont'd)

7. Measure the resistance between solenoid harness connector terminal No. 5 and body ground.

SOLENOID HARNESS CONNECTOR

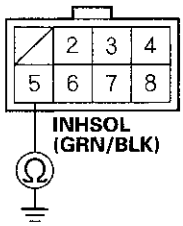

Terminal side of male terminals

Is there 11.7—21.0 Ω ?

YES—Go to step 11.

NO—Go to step 8.

8. Remove the lower valve body (see page 14-167).

9. Disconnect the inhibitor solenoid connector.

10. Measure the resistance between inhibitor solenoid connector terminal No. 2 and body ground.

INHIBITOR SOLENOID CONNECTOR

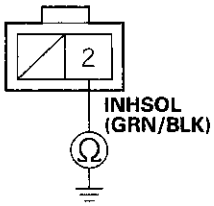

Terminal side of male terminals

Is there 11.7—21.0 Ω ?

YES—Replace the solenoid harness (see page 14-169), then go to step 14.

NO—Replace the inhibitor solenoid (see page 14-170), then go to step 14.

11. Jump the SCS line with the HDS.

12. Disconnect PCM connector B (44P).

13. Check for continuity between PCM connector terminal B10 and body ground.

PCM CONNECTOR B (44P)

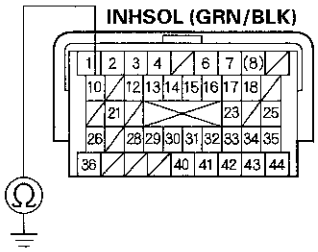

Terminal side of female terminals

Is there continuity?

YES—Repair short to body ground in the wire between PCM connector terminal B10 and solenoid harness connector terminal No. 5, then go to step 14.

NO—Go to step 20.

14. Reconnect all connectors.

15. Turn the ignition switch to ON (II).

16. Clear the DTC with the HDS.

17. Select Inhibitor Solenoid Test in the Miscellaneous Test Menu with the HDS.

18. Check for Temporary DTCs or DTCs with the HDS.

    Is DTC P1860 indicated?

    YES—Check for intermittent short to body ground between the inhibitor solenoid and the PCM, then go to step 1.

    NO—Go to step 19.

19. Monitor the OBD STATUS for P1860 in the DTCs MENU with the HDS.

    Does the HDS indicate PASSED?

    YES—Troubleshooting is complete. If any other Temporary DTCs or DTCs were indicated in step 18, go to the indicated DTC's troubleshooting.■

    NO—If the HDS indicates FAILED, check for poor connections or loose terminals between the inhibitor solenoid and the PCM, then go to step 1. If the HDS indicates NOT COMPLETED, go to step 17.

20. Reconnect all connectors.

21. Update the PCM if it does not have the latest software (see page 11-236), or substitute a known-good PCM (see page 11-7).

(cont'd)

DTC Troubleshooting (cont'd)

22. Select Inhibitor Solenoid Test in the Miscellaneous Test Menu with the HDS.

23. Check for Temporary DTCs or DTCs with the HDS.

    Is DTC P1860 indicated?

    YES—Check for poor connections or loose terminals between the inhibitor solenoid and the PCM. If the PCM was updated, substitute a known-good PCM (see page 11-7), then go to step 22. If the PCM was substituted, go to step 1.

    NO—Go to step 24.

24. Monitor the OBD STATUS for P1860 in the DTCs MENU with the HDS.

    Does the HDS indicate PASSED?

    YES—If the PCM was updated, troubleshooting is complete. If the PCM was substituted, replace the original PCM (see page 11-238). If any other Temporary DTCs or DTCs were indicated in step 23, go to the indicated DTC's troubleshooting. ■

    NO—If the HDS indicates FAILED, check for poor connections or loose terminals between the inhibitor solenoid and the PCM. If the PCM was updated, substitute a known-good PCM (see page 11-7), then go to step 22. If the PCM was substituted, go to step 1. If the HDS indicates NOT COMPLETED, go to step 22.

DTC P1861: Inhibitor Solenoid Circuit High Voltage

NOTE:
- Before you troubleshoot, record all freeze data and any on-board snapshot with the HDS, and review General Troubleshooting Information (see page 14-3).
- This code is caused by an electrical circuit problem and cannot be caused by a mechanical problem in the transmission.

1. Turn the ignition switch to ON (II).

2. Clear the DTC with the HDS.

3. Select the Inhibitor Solenoid Test in the Miscellaneous Test Menu with the HDS.

4. Check for Temporary DTCs or DTCs with the HDS.

   Is DTC P1861 indicated?

   YES—Go to step 5.

   NO—Intermittent failure, the system is OK at this time. Check for poor connections or loose terminals between the PCM and the inhibitor solenoid. ■

5. Turn the ignition switch to LOCK (0).

6. Disconnect the solenoid harness connector.

7. Measure the resistance between solenoid harness connector terminal No. 5 and body ground.

SOLENOID HARNESS CONNECTOR

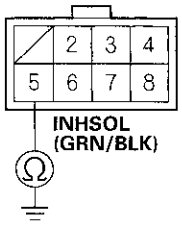

Terminal side of male terminals

Is there 11.7–21.0 Ω ?

YES—Go to step 11.

NO—Go to step 8.

8. Remove the lower valve body (see page 14-167).

9. Disconnect the inhibitor solenoid connector.

10. Measure the resistance between inhibitor solenoid connector terminal No. 2 and body ground.

INHIBITOR SOLENOID CONNECTOR

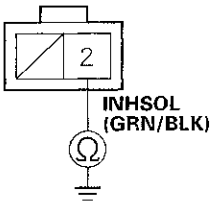

Terminal side of male terminals

Is there 11.7–21.0 Ω ?

YES—Replace the solenoid harness (see page 14-169), then go to step 14.

NO—Replace the inhibitor solenoid (see page 14-170), then go to step 14.

(cont'd)

DTC Troubleshooting (cont'd)

11. Jump the SCS line with the HDS.

12. Disconnect PCM connector B (44P).

13. Check for continuity between PCM connector terminal B10 and solenoid harness connector terminal No. 5.

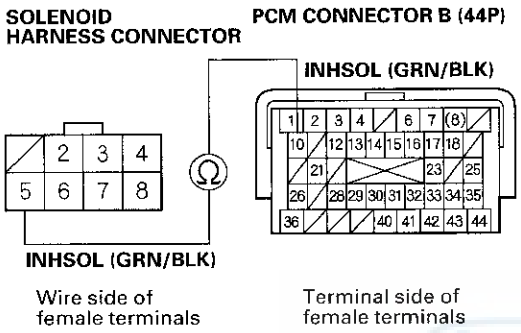

Is there continuity?

YES—Go to step 20.

NO—Repair open in the wire between PCM connector terminal B10 and solenoid harness connector terminal No. 5, then go to step 14.

14. Reconnect all connectors.

15. Turn the ignition switch to ON (II).

16. Clear the DTC with the HDS.

17. Select the Inhibitor Solenoid Test in the Miscellaneous Test Menu with the HDS.

18. Check for Temporary DTCs or DTCs with the HDS.

    Is DTC P1861 indicated?

    YES—Check for poor connections or loose terminals between the inhibitor solenoid and the PCM, then go to step 1.

    NO—Go to step 19.

19. Monitor the OBD STATUS for P1861 in the DTCs MENU with the HDS.

    Does the HDS indicate PASSED?

    YES—Troubleshooting is complete. If any other Temporary DTCs or DTCs were indicated in step 18, go to the indicated DTC's troubleshooting. ■

    NO—If the HDS indicates FAILED, check for poor connections or loose terminals between the inhibitor solenoid and the PCM, then go to step 1. If the HDS indicates NOT COMPLETED, go to step 17.

20. Reconnect all connectors.

21. Update the PCM if it does not have the latest software (see page 11-236), or substitute a known-good PCM (see page 11-7).

22. Select the Inhibitor Solenoid Test in the Miscellaneous Test Menu with the HDS.

23. Check for Temporary DTCs or DTCs with the HDS.

    Is DTC P1861 indicated?

    YES—Check for poor connections or loose terminals between the inhibitor solenoid and the PCM. If the PCM was updated, substitute a known-good PCM (see page 11-7), then go to step 22. If the PCM was substituted, go to step 1.

    NO—Go to step 24.

24. Monitor the OBD STATUS for P1861 in the DTCs MENU with the HDS.

    Does the HDS indicate PASSED?

    YES—If the PCM was updated, troubleshooting is complete. If the PCM was substituted, replace the original PCM (see page 11-238). If any other Temporary DTCs or DTCs were indicated in step 23, go to the indicated DTC's troubleshooting. ■

    NO—If the HDS indicates FAILED, check for poor connections or loose terminals between the inhibitor solenoid and the PCM. If the PCM was updated, substitute a known-good PCM (see page 11-7), then go to step 22. If the PCM was substituted, go to step 1. If the HDS indicates NOT COMPLETED, go to step 22.

DTC P1890: Problem in CVT Speed Control System

NOTE: Before you troubleshoot, record all freeze data and any on-board snapshot with the HDS, and review General Troubleshooting Information (see page 14-3).

1. Turn the ignition switch to ON (II).

2. Check for Temporary DTCs or DTCs with the HDS.

   Are any other Temporary DTCs or DTCs indicated simultaneously with DTC P1890?

   YES—Go to the indicated DTC's troubleshooting, and recheck.

   NO—Go to step 3.

3. Clear the DTC with the HDS.

4. Start the engine, and warm it up until the coolant temperature reaches 176 °F (80 °C).

5. Check the IMA battery level gauge in the gauge control module (tach).

   Does the IMA battery level gauge indicate more than 4 segments?

   YES—Go to step 6.

   NO—Run the engine with the shift lever in P, at 3,500 rpm until the IMA battery level gauge indicates at least 4 segments, then go to step 6.

6. Test-drive the vehicle at speeds about 37 mph (60 km/h) for at least 1 minute.

(cont'd)

DTC Troubleshooting (cont'd)

7. Check for Temporary DTCs or DTCs with the HDS.

   Are any DTCs indicated?

   YES—Go to the indicated DTC's troubleshooting. ■

   NO—Go to step 6, and repeat the test-drive. If the HDS does not indicate a DTC after the test-drive has been done four times, go to step 08.

8. Park the vehicle on level ground, apply the parking brake, and block all four wheels securely.

9. Start the engine.

10. Firmly press the brake pedal, and shift the shift lever to D.

11. While pressing the brake pedal firmly, also press the accelerator for 6—8 seconds at full throttle, and measure the stall speed rpm.

    Does the stall speed exceed 3,500 rpm?

    YES—Replace the transmission. ■

    NO—Go to step 12.

12. Test-drive the vehicle at speeds about 37 mph (60 km/h) for at least 1 minute.

13. Check the engine speed when vehicle speed is 37 mph (60 km/h).

    Is the engine speed 2,350—2,950 rpm?

    YES—Intermittent failure, the system is OK at this time. If necessary, replace the CVTF (see page 14-176), and recheck.

    NO—Replace the transmission. ■

DTC P1891: Problem in Start Clutch Control System

NOTE: Before you troubleshoot, record all freeze data and any on-board snapshot with the HDS, and review General Troubleshooting Information (see page 14-3).

'06 Model

1. Turn the ignition switch to ON (II).

2. Check for Temporary DTCs or DTCs with the HDS.

   Are any other Temporary DTCs or DTCs indicated simultaneously with DTC P1891?

   YES—Go to the indicated DTC's troubleshooting, and recheck.

   NO—Go to step 3.

3. Clear the DTC with the HDS.

4. Turn the ignition switch to LOCK (0).

5. Disconnect the solenoid harness connector.

6. Start the engine. Shift the shift lever to D, and release the parking brake and brake pedal, then check if the vehicle moves.

   Did the vehicle move?

   YES—Go to step 7.

   NO—Replace the start clutch, then go to step 18.

7. Turn the ignition switch to LOCK (0).

8. Reconnect the solenoid harness connector.

9. Start the engine. Shift the shift lever to D, and check the creeping speed on level ground.

   Is the creeping speed about 3 mph (5 km/h)?

   YES—Go to step 10.

   NO—Replace the CVT start clutch pressure control valve (see page 14-168), then go to step 17.

10. Park the vehicle on level ground, apply the parking brake, and block all four wheels securely.

11. Start the engine, and warm it up to normal operating temperature (the radiator fan comes on).

12. Firmly press the brake pedal, and shift the shift lever to D.

13. While pressing the brake pedal fully, press the accelerator for 6—8 seconds at full throttle, and measure the stall speed rpm in D.

    Does the engine speed exceed 3,500 rpm?

    YES—Replace the start clutch, then go to step 18.

    NO—Go to step 14.

14. Turn the ignition switch to LOCK (0).

15. Disconnect the solenoid harness connector.

16. Start the engine. Shift the shift lever to D, and release the parking brake and brake pedal, then check if the vehicle moves.

    Did the vehicle move?

    YES—Go to step 21.

    NO—Replace the start clutch, then go to step 18.

17. Clear the DTC with the HDS.

18. Start the engine. Test-drive the vehicle at speeds about 37 mph (60 km/h) for at least 1 minute.

19. Check for Temporary DTCs or DTCs with the HDS.

    Is DTC P1891 indicated?

    YES—Check for poor connections or loose terminals between the CVT start clutch pressure control valve and the PCM, then go to step 1.

    NO—Go to step 20.

20. Monitor the OBD STATUS for P1891 in the DTCs MENU with the HDS.

    Does the HDS indicate PASSED?

    YES—Troubleshooting is complete. If any other Temporary DTCs or DTCs were indicated in step 19, go to the indicated DTC's troubleshooting. ■

    NO—If the HDS indicates FAILED, check for poor connections or loose terminals between the CVT start clutch pressure control valve and the PCM, then go to step 1. If the HDS indicates NOT COMPLETED, go to step 18.

21. Reconnect all connectors.

22. Update the PCM if it does not have the latest software (see page 11-236), or substitute a known-good PCM (see page 11-7).

23. Start the engine. Test-drive the vehicle at speeds about 37 mph (60 km/h) for at least 1 minute.

(cont'd)

DTC Troubleshooting (cont'd)

24. Check for Temporary DTCs or DTCs with the HDS.

    Is DTC P1891 indicated?

    YES—Check for poor connections or loose terminals between the CVT start clutch pressure control valve and the PCM. If the PCM was updated, substitute a known-good PCM (see page 11-7), then go to step 23. If the PCM was substituted, go to step 1.

    NO—Go to step 25.

25. Monitor the OBD STATUS for P1891 in the DTCs MENU with the HDS.

    Does the HDS indicate PASSED?

    YES—If the PCM was updated, troubleshooting is complete. If the PCM was substituted, replace the original PCM (see page 11-238). If any other Temporary DTCs or DTCs were indicated in step 24, go to the indicated DTC's troubleshooting.■

    NO—If the HDS indicates FAILED, check for poor connections or loose terminals between the CVT start clutch pressure control valve and the PCM. If the PCM was updated, substitute a known-good PCM (see page 11-7), then go to step 23. If the PCM was substituted, go to step 1. If the HDS indicates NOT COMPLETED, go to step 23.

DTC P1891: Problem in Start Clutch Control System

NOTE: Before you troubleshoot, record all freeze data and any on-board snapshot with the HDS, and review General Troubleshooting Information (see page 14-3).

'07-09 Models

1. Turn the ignition switch to ON (II).

2. Check for Temporary DTCs or DTCs with the HDS.

   Are any other Temporary DTCs or DTCs indicated simultaneously with DTC P1891?

   YES—Go to step 3.

   NO—Go to step 4.

3. Check for Temporary DTCs or DTCs with the HDS.

   Is the DTC P0796 indicated simultaneously with DTC P1891?

   YES—Replace the start clutch, then go to step 19.

   NO—Go to the indicated DTC's troubleshooting, and recheck.

4. Clear the DTC with the HDS.

5. Turn the ignition switch to LOCK (0).

6. Disconnect the solenoid harness connector.

7. Start the engine. Shift the shift lever to D, and release the parking brake and brake pedal, then check if the vehicle moves.

   Did the vehicle move?

   YES—Go to step 8.

   NO—Replace the start clutch, then go to step 19.

8. Turn the ignition switch to LOCK (0).

9. Reconnect the solenoid harness connector.

10. Start the engine. Shift the shift lever to D, and check the creeping speed on level ground.

    Is the creeping speed about 3 mph (5 km/h)?

    YES—Go to step 11.

    NO—Replace CVT start clutch pressure control valve (see page 14-168), then go to step 18.

11. Park the vehicle on level ground, apply the parking brake, and block all four wheels securely.

12. Start the engine, and warm it up to normal operating temperature (the radiator fan comes on).

13. Firmly press the brake pedal, and shift the shift lever to D.

14. While pressing the brake pedal fully, press the accelerator for 6—8 seconds at full throttle, and measure the stall speed rpm in D.

    Does the engine speed exceed 3,500 rpm?

    YES—Replace the start clutch, then go to step 19.

    NO—Go to step 15.

15. Turn the ignition switch to LOCK (0).

16. Disconnect the solenoid harness connector.

17. Start the engine. Shift the shift lever to D, and release the parking brake and brake pedal, then check if the vehicle moves.

    Did the vehicle move?

    YES—Go to step 22.

    NO—Replace the start clutch, then go to step 19.

18. Clear the DTC with the HDS.

19. Start the engine. Test-drive the vehicle at speeds about 37 mph (60 km/h) for at least 1 minute.

20. Check for Temporary DTCs or DTCs with the HDS.

    Is DTC P1891 indicated?

    YES—Check for poor connections or loose terminals between the CVT start clutch pressure control valve and the PCM, then go to step 1.

    NO—Go to step 21.

21. Monitor the OBD STATUS for P1891 in the DTCs MENU with the HDS.

    Does the HDS indicate PASSED?

    YES—Troubleshooting is complete. If any other Temporary DTCs or DTCs were indicated in step 20, go to the indicated DTC's troubleshooting. ■

    NO—If the HDS indicates FAILED, check for poor connections or loose terminals between the CVT start clutch pressure control valve and the PCM, then go to step 1. If the HDS indicates NOT COMPLETED, go to step 19.

22. Reconnect all connectors.

23. Update the PCM if it does not have the latest software (see page 11-236), or substitute a known-good PCM (see page 11-7).

24. Start the engine. Test-drive the vehicle at speeds about 37 mph (60 km/h) for at least 1 minute.

(cont'd)

DTC Troubleshooting (cont'd)

25. Check for Temporary DTCs or DTCs with the HDS.

    Is DTC P1891 indicated?

    YES—Check for poor connections or loose terminals between the CVT start clutch pressure control valve and the PCM. If the PCM was updated, substitute a known-good PCM (see page 11-7), then go to step 24. If the PCM was substituted, go to step 1.

    NO—Go to step 26.

26. Monitor the OBD STATUS for P1891 in the DTCs MENU with the HDS.

    Does the HDS indicate PASSED?

    YES—If the PCM was updated, troubleshooting is complete. If the PCM was substituted, replace the original PCM (see page 11-238). If any other Temporary DTCs or DTCs were indicated in step 25, go to the indicated DTC's troubleshooting. ■

    NO—If the HDS indicates FAILED, check for poor connections or loose terminals between the CVT start clutch pressure control valve and the PCM. If the PCM was updated, substitute a known-good PCM (see page 11-7), then go to step 24. If the PCM was substituted, go to step 1. If the HDS indicates NOT COMPLETED, go to step 24.

DTC P1898: CVT Drive Pulley Pressure Control Valve Stuck ON or CVT Driven Pulley Pressure Control Valve Stuck OFF

NOTE:
- Before you troubleshoot, record all freeze data and any on-board snapshot with the HDS, and review General Troubleshooting Information (see page 14-3).
- Keep replacement solenoid valves on hand: the CVT drive pulley pressure control valve and the CVT driven pulley pressure control valve set.

1. Turn the ignition switch to ON (II).

2. Check for Temporary DTCs or DTCs with the HDS.

   Are any other Temporary DTCs or DTCs indicated simultaneously with DTC P1898?

   YES—Go to the indicated DTC's troubleshooting, and recheck.

   NO—Go to step 3.

3. Clear the DTC with the HDS.

4. Start the engine, and warm it up until the coolant temperature reaches 176 °F (80 °C).

5. Check the IMA battery level gauge in the gauge control module (tach).

   Does the IMA battery level gauge indicate more than 4 segments?

   YES—Go to step 6.

   NO—Run the engine with the shift lever in P, at 3,500 rpm until the IMA battery level gauge indicates at least 4 segments, then go to step 6.

6. Shift the shift lever to D.

7. Keep pressing the brake pedal for 5 seconds.

8. Accelerate from a stop until the vehicle speed reaches 40—50 mph (65—80 km/h), and test-drive the vehicle on a flat road for at least 15 seconds. Do not release the accelerator during the test-drive.

9. Slow down to a stop, and after stopping keep pressing the brake pedal for 5 seconds.

10. Check for Temporary DTCs or DTCs with the HDS.

    Is DTC P1898 indicated?

    YES—Replace CVT drive pulley pressure control valve (see page 14-169) and CVT driven pulley pressure control valve (see page 14-169), then go to step 11.

    NO—Go to step 6, and repeat the test-drive. If the HDS does not indicate a DTC after the test-drive has been done four times, the problem was an intermittent failure; the system is OK at this time.

11. Turn the ignition switch to ON (II).

12. Clear the DTC with the HDS.

13. Start the engine, and warm it up until the coolant temperature reaches 176 °F (80 °C)

14. Shift the shift lever to D.

15. Keep pressing the brake pedal for 5 seconds.

16. Accelerate from a stop until the vehicle speed reaches 40—50 mph (65—80 km/h), and test-drive the vehicle on a flat road for at least 15 seconds. Do not release the accelerator during the test-drive.

17. Slow down to a stop, and after stopping keep pressing the brake pedal for 5 seconds.

18. Check for Temporary DTCs or DTCs with the HDS.

    Is DTC P1898 indicated?

    YES—Replace the transmission. ■

    NO—Go to step 19.

19. Monitor the OBD STATUS for P1898 in the DTCs MENU with the HDS.

    Does the HDS indicate PASSED?

    YES—Troubleshooting is complete. If any other Temporary DTCs or DTCs were indicated in step 18, go to the indicated DTC's troubleshooting. ■

    NO—If the HDS indicates FAILED, check for poor connections or loose terminals between the CVT drive pulley pressure control valve, CVT driven pulley pressure control valve, and the PCM, then go to step 1. If the HDS indicates NOT COMPLETED, go to step 13.

DTC Troubleshooting (cont'd)

DTC P1899: CVT Drive Pulley Pressure Control Valve Stuck OFF or CVT Driven Pulley Pressure Control Valve Stuck ON

NOTE:
- Before you troubleshoot, record all freeze data and any on-board snapshot with the HDS, and review General Troubleshooting Information (see page 14-3).
- Keep replacement solenoid valves on hand: the CVT drive pulley pressure control valve and the CVT driven pulley pressure control valve set.

1. Turn the ignition switch to ON (II).

2. Check for Temporary DTCs or DTCs with the HDS.

   Are any other Temporary DTCs or DTCs indicated simultaneously with DTC P1899?

   YES—Go to the indicated DTC's troubleshooting, and recheck.

   NO—Go to step 3.

3. Clear the DTC with the HDS.

4. Start the engine, and warm it up until the coolant temperature reaches 176 °F (80 °C).

5. Check the IMA battery level gauge in the gauge control module (tach).

   Does the IMA battery level gauge indicate more than 4 segments?

   YES—Go to step 6.

   NO—Run the engine with the shift lever in P, at 3,500 rpm until the IMA battery level gauge indicates at least 4 segments, then go to step 6.

6. Shift the shift lever to D.

7. Keep pressing the brake pedal for 5 seconds.

8. Accelerate from a stop until the vehicle speed reaches 40—50 mph (65—80 km/h), and test-drive the vehicle on a flat road for at least 15 seconds. Do not release the accelerator during the test-drive.

9. Slow down to a stop, and after stopping keep pressing the brake pedal for 5 seconds.

10. Check for Temporary DTCs or DTCs with the HDS.

    Is DTC P0746, P0777, or P1899 indicated?

    YES—The CVT drive pulley pressure control valve may be stuck OFF or the CVT driven pulley pressure control valve may be stuck ON:

    - DTC P0746 is indicated, replace the CVT drive pulley pressure control valve (see page 14-169).
    - DTC P0777 is indicated, replace the CVT driven pulley pressure control valve (see page 14-169).
    - DTC P1899 is indicated, replace the CVT drive pulley pressure control valve (see page 14-169) and CVT driven pulley pressure control valve (see page 14-169) as a set.

    If any part was replaced, go to step 9.

    NO—Go to step 6, and repeat the test-drive. If the HDS does not indicate a DTC after the test-drive has been done four times, the problem was an intermittent failure; the system is OK at this time.

11. Turn the ignition switch to ON (II).

12. Clear the DTC with the HDS .

13. Start the engine, and warm it up until the coolant temperature reaches 176 °F (80 °C).

14. Shift the shift lever to D.

15. Keep pressing the brake pedal for 5 seconds.

16. Accelerate from a stop until the vehicle speed reaches 40—50 mph (65—80 km/h), and test-drive the vehicle on a flat road for at least 15 seconds. Do not release the accelerator during the test-drive.

17. Slow down to a stop, and after stopping keep pressing the brake pedal for 5 seconds.

18. Check for Temporary DTCs or DTCs with the HDS.

    Is DTC P1899 indicated?

    YES—Replace the transmission. ■

    NO—Go to step 19.

19. Monitor the OBD STATUS for P1899 in the DTCs MENU with the HDS.

    Does the HDS indicate PASSED?

    YES—Troubleshooting is complete. If any other Temporary DTCs or DTCs were indicated in step 18, go to the indicated DTC's troubleshooting. ■

    NO—If the HDS indicates FAILED, check for poor connections or loose terminals between the CVT drive pulley pressure control valve, the CVT driven pulley pressure control valve, the and the PCM, then go to step 1. If the HDS indicates NOT COMPLETED, go to step 13.

DTC P2122: Accelerator Pedal Position (APP) Sensor A (Throttle Position (TP) Sensor D) Circuit Low Voltage

DTC P2123: Accelerator Pedal Position (APP) Sensor A (Throttle Position (TP) Sensor D) Circuit High Voltage

NOTE: Before you troubleshoot, record all freeze data and any on-board snapshot with the HDS, and review General Troubleshooting Information (see page 14-3).

1. Turn the ignition switch to ON (II).

2. Clear the DTC with the HDS.

3. Check for Temporary DTCs or DTCs in the PGM-FI SYSTEM with the HDS.

   Is DTC P2122 or P2123 indicated in the PGM-FI system?

   YES—Go to the DTC P2122 troubleshooting (see page 11-262) or DTC P2123 troubleshooting (see page 11-265) in the electronic throttle control system (ETCS). ■

   NO—Go to step 4.

4. Check for Temporary DTCs or DTCs in the A/T SYSTEM with the HDS.

   Is DTC P2122 or P2123 indicated in the A/T SYSTEM?

   YES—Go to step 5.

   NO—Intermittent failure, the system is OK at this time. If any other Temporary DTCs or DTCs were indicated, go to the indicated DTC's troubleshooting. ■

(cont'd)

DTC Troubleshooting (cont'd)

5. Update the PCM if it does not have the latest software (see page 11-236), or substitute a known-good PCM (see page 11-7).

6. Start the engine, and let it idle for at least 2 minutes.

7. Check for Temporary DTCs or DTCs the A/T SYSTEM with the HDS.

   Is DTC P2122 or P2123 indicated in the A/T SYSTEM?

   YES—Check for poor connections or loose terminals at the PCM. If the PCM was updated, substitute a known-good PCM (see page 11-7), then go to step 6. If the PCM was substituted, go to step 1.

   NO—Go to step 8.

8. Monitor the OBD STATUS for P2122 or P2123 in the DTCs MENU with the HDS.

   Does the HDS indicate PASSED?

   YES—If the PCM was updated, troubleshooting is complete. If the PCM was substituted, replace the original PCM (see page 11-238). If any other Temporary DTCs or DTCs were indicated in step 7, go to the indicated DTC's troubleshooting.■

   NO—If the HDS indicates FAILED, check for poor connections or loose terminals at the PCM. If the PCM was updated, substitute a known-good PCM (see page 11-7), then go to step 6. If the PCM was substituted, go to step 1. If the HDS indicates NOT COMPLETED, go to step 6.

DTC P2159: Range/Performance Problem in CVT Speed Sensor (Secondary) Circuit

DTC P2160: Problem in CVT Speed Sensor (Secondary) Circuit (No Signal Input)

NOTE:
- Before you troubleshoot, record all freeze data and any on-board snapshot with the HDS, and review General Troubleshooting Information (see page 14-3).
- This code is caused by an electrical circuit problem and cannot be caused by a mechanical problem in the transmission.

'06 Model

1. Check for proper CVT speed sensor (secondary) installation (see page 14-172). If the sensor is installed incorrectly, reinstall the sensor correctly, then go to step 26.

2. Turn the ignition switch to ON (II).

3. Clear the DTC with the HDS.

4. Block the rear wheels and raise the front of the vehicle. Make sure it is securely supported, and allow the front wheels to rotate freely, or raise the vehicle on a lift.

5. Start the engine, run the vehicle with the shift lever to D, and the engine speed 2,000 rpm or higher for at least 30 seconds. Slow down and stop the wheels.

6. Monitor the OBD STATUS for P2159 or P2160 in the DTCs MENU with the HDS.

   Does the HDS indicate FAILED?

   YES—Go to step 7.

   NO—If the HDS indicates PASSED, intermittent failure, the system is OK at this time. Check for poor connections or loose terminals between the PCM and the CVT speed sensor (secondary). If the HDS indicates NOT COMPLETED, go to step 5.

7. Turn the ignition switch to LOCK (0).

8. Jump the SCS line with the HDS.

9. Disconnect PCM connector C (44P).

10. Check for continuity between PCM connector terminal C40 and body ground, and between PCM connector terminal C44 and body ground.

PCM CONNECTOR C (44P)

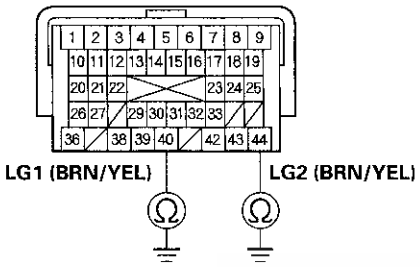

Terminal side of female terminals

Is there continuity?

YES—Go to step 11.

NO—Repair open in the wires between PCM connector terminals C40, C44, and body ground (G102), or repair poor body ground (G102), then go to step 26.

11. Connect PCM connector C (44P).

12. Disconnect the CVT speed sensor (secondary) connector.

13. Turn the ignition switch to ON (II).

14. Measure the voltage between CVT speed sensor (secondary) connector terminal No. 1 and body ground.

CVT SPEED SENSOR (SECONDARY) CONNECTOR

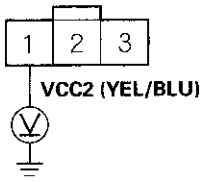

Wire side of female terminals

Is there about 5 V?

YES—Go to step 19.

NO—Go to step 15.

(cont'd)

DTC Troubleshooting (cont'd)

15. Turn the ignition switch to LOCK (0).

16. Jump the SCS line with the HDS.

17. Disconnect PCM connector B (44P).

18. Check for continuity between PCM connector terminal B18 and CVT speed sensor (secondary) connector terminal No. 1.

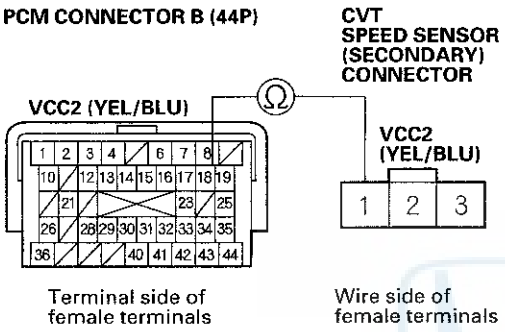

Is there continuity?

YES—Go to step 32.

NO—Repair open in the wire between PCM connector terminal B18 and the CVT speed sensor (secondary) connector, then go to step 26.

19. Measure the voltage between CVT speed sensor (secondary) connector terminals No. 2 and No. 3.

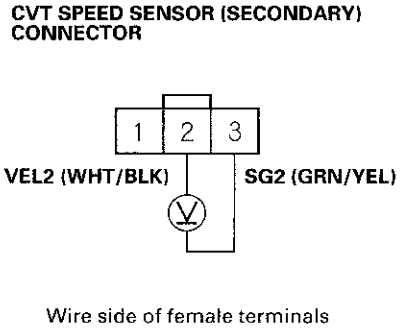

Is there about 5 V?

YES—Replace the CVT speed sensor (secondary) (see page 14-172), then go to step 26.

NO—Go to step 20.

20. Turn the ignition switch to LOCK (0).

21. Jump the SCS line with the HDS.

22. Disconnect PCM connector B (44P).

23. Check for continuity between CVT speed sensor (secondary) connector terminal No. 2 and body ground.

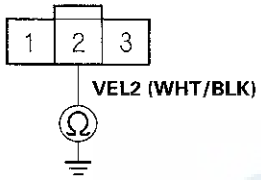

Wire side of female terminals

Is there continuity?

YES—Repair short to body ground in the wire between PCM connector terminal B8 and the CVT speed sensor (secondary) connector, then go to step 26.

NO—Go to step 24.

24. Check for continuity between PCM connector terminal B33 and CVT speed sensor (secondary) connector terminal No. 3.

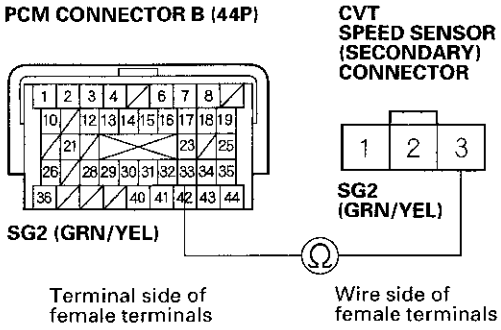

Is there continuity?

YES—Go to step 25.

NO—Repair open in the wire between the CVT speed sensor (secondary) connector and PCM connector terminal B33, then go to step 26.

(cont'd)

DTC Troubleshooting (cont'd)

25. Check for continuity between PCM connector terminal B8 and CVT speed sensor (secondary) connector terminal No. 2.

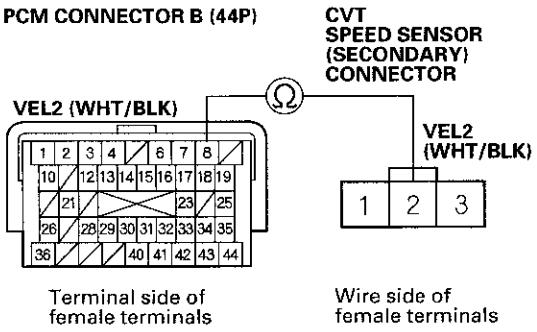

Is there continuity?

YES—Go to step 32.

NO—Repair open in the wire between PCM connector terminal B8 and the CVT speed sensor (secondary), then go to step 26.

26. Reconnect all connectors.

27. Turn the ignition switch to ON (II).

28. Clear the DTC with the HDS.

29. Start the engine, run the vehicle with the shift lever to D, and keep the vehicle at speeds over 9 mph (15 km/h) for at least 30 seconds. Slow down and stop the wheels.

30. Check for Temporary DTCs or DTCs with the HDS.

    Is DTC P2159 or P2160 indicated?

    YES—Check for poor connections or loose terminals between the CVT speed sensor (secondary) and the PCM, then go to step 1.

    NO—Go to step 31.

31. Monitor the OBD STATUS for P2159 or P2160 in the DTCs MENU with the HDS.

    Does the HDS indicate PASSED?

    YES—Troubleshooting is complete. If any other Temporary DTCs or DTCs were indicated in step 30, go to the indicated DTC's troubleshooting.■

    NO—If the HDS indicates FAILED, check for poor connections or loose terminals between the CVT speed sensor (secondary) and the PCM, then go to step 1. If the HDS indicates NOT COMPLETED, go to step 29.

32. Reconnect all connectors.

33. Update the PCM if it does not have the latest software (see page 11-236), or substitute a known-good PCM (see page 11-7).

34. Start the engine, run the vehicle with the shift lever to D, and keep the vehicle at speeds over 9 mph (15 km/h) for at least 30 seconds. Slow down and stop the wheels.

35. Check for Temporary DTCs or DTCs with the HDS.

Is DTC P2159 or P2160 indicated?

YES—Check for poor connections or loose terminals between the CVT speed sensor (secondary) and the PCM. If the PCM was updated, substitute a known-good PCM (see page 11-7), then go to step 34. If the PCM was substituted, go to step 1.

NO—Go to step 36.

36. Monitor the OBD STATUS for P2159 or P2160 in the DTCs MENU with the HDS.

Does the HDS indicate PASSED?

YES—If the PCM was updated, troubleshooting is complete. If the PCM was substituted, replace the original PCM (see page 11-238). If any other Temporary DTCs or DTCs were indicated in step 35, go to the indicated DTC's troubleshooting.■

NO—If the HDS indicates FAILED, check for poor connections or loose terminals between the CVT speed sensor (secondary) and the PCM. If the PCM was updated, substitute a known-good PCM (see page 11-7), then go to step 34. If the PCM was substituted, go to step 1. If the HDS indicates NOT COMPLETED, go to step 34.

DTC U0028: F-CAN Malfunction (BUS-OFF)

NOTE: Before you troubleshoot, record all freeze data and any on-board snapshot with the HDS, and review General Troubleshooting Information (see page 14-3).

1. Turn the ignition switch to ON (II).

2. Clear the DTC with the HDS.

3. Check for Temporary DTCs or DTCs in the PGM-FI SYSTEM with the HDS.

Is DTC U0028 indicated in the PGM-FI SYSTEM?

YES—Go to the DTC U0028 troubleshooting in the PGM-FI System (see page 11-164).■

NO—Go to step 4.

4. Check for Temporary DTCs or DTCs in the A/T SYSTEM with the HDS.

Is DTC U0028 indicated in the A/T SYSTEM?

YES—Go to step 5.

NO—Intermittent failure, the system is OK at this time. If any other Temporary DTCs or DTCs were indicated, go to the indicated DTC's troubleshooting.■

5. Update the PCM if it does not have the latest software (see page 11-236), or substitute a known-good PCM (see page 11-7).

6. Start the engine, and let it idle for at least 2 minutes.

(cont'd)

DTC Troubleshooting (cont'd)

7. Check for Temporary DTCs or DTCs in the A/T SYSTEM with the HDS.

   Is DTC U0028 indicated in the A/T SYSTEM?

   YES—Check for poor connections or loose terminals at the PCM. If the PCM was updated, substitute a known-good PCM (see page 11-7), then go to step 6. If the PCM was substituted, go to step 1.

   NO—Go to step 8.

8. Monitor the OBD STATUS for U0028 in the DTCs MENU with the HDS.

   Does the HDS indicate PASSED?

   YES—If the PCM was updated, troubleshooting is complete. If the PCM was substituted, replace the original PCM (see page 11-238). If any other Temporary DTCs or DTCs were indicated in step 7, go to the indicated DTC's troubleshooting.■

   NO—If the HDS indicates FAILED, check for poor connections or loose terminals at the PCM. If the PCM was updated, substitute a known-good PCM (see page 11-7), then go to step 6. If the PCM was substituted, go to step 1. If the HDS indicates NOT COMPLETED, go to step 6.

DTC U0037: IMA-CAN Malfunction (BUS-OFF)

NOTE: Before you troubleshoot, record all freeze data and any on-board snapshot with the HDS, and review General Troubleshooting Information (see page 14-3).

1. Turn the ignition switch to ON (II).

2. Clear the DTC with the HDS.

3. Check for Temporary DTCs or DTCs in the PGM-FI SYSTEM with the HDS.

   Is DTC U0037 indicated in the PGM-FI SYSTEM?

   YES—Go to the DTC U0037 troubleshooting in the PGM-FI System (see page 11-165).■

   NO—Go to step 4.

4. Check for Temporary DTCs or DTCs in the A/T SYSTEM with the HDS.

   Is DTC U0037 indicated in the A/T SYSTEM?

   YES—Go to step 5.

   NO—Intermittent failure, the system is OK at this time. If any other Temporary DTCs or DTCs were indicated, go to the indicated DTC's troubleshooting.■

5. Update the PCM if it does not have the latest software (see page 11-236), or substitute a known-good PCM (see page 11-7).

6. Start the engine, and let it idle for at least 2 minutes.

7. Check for Temporary DTCs or DTCs in the A/T SYSTEM with the HDS.

   Is DTC U0037 indicated in the A/T SYSTEM?

   YES—Check for poor connections or loose terminals at the PCM. If the PCM was updated, substitute a known-good PCM (see page 11-7), then go to step 6. If the PCM was substituted, go to step 1.

   NO—Go to step 8.

8. Monitor the OBD STATUS for U0037 in the DTCs MENU with the HDS.

   Does the HDS indicate PASSED?

   YES—If the PCM was updated, troubleshooting is complete. If the PCM was substituted, replace the original PCM (see page 11-238). If any other Temporary DTCs or DTCs were indicated in step 7, go to the indicated DTC's troubleshooting.■

   NO—If the HDS indicates FAILED, check for poor connections or loose terminals at the PCM. If the PCM was updated, substitute a known-good PCM (see page 11-7), then go to step 6. If the PCM was substituted, go to step 1. If the HDS indicates NOT COMPLETED, go to step 6.

DTC U0121: F-CAN Malfunction (PCM-ABS)

NOTE: Before you troubleshoot, record all freeze data and any on-board snapshot with the HDS, and review General Troubleshooting Information (see page 14-3).

1. Turn the ignition switch to ON (II).

2. Clear the DTC with the HDS.

3. Check for Temporary DTCs or DTCs in the PGM-FI SYSTEM with the HDS.

   Is DTC U0121 indicated in the PGM-FI SYSTEM?

   YES—Go to the DTC U0121 troubleshooting in the PGM-FI System (see page 11-177).■

   NO—Go to step 4.

4. Check for Temporary DTCs or DTCs in the A/T SYSTEM with the HDS.

   Is DTC U0121 indicated in the A/T SYSTEM?

   YES—Go to step 5.

   NO—Intermittent failure, the system is OK at this time. If any other Temporary DTCs or DTCs were indicated, go to the indicated DTC's troubleshooting.■

5. Update the PCM if it does not have the latest software (see page 11-236), or substitute a known-good PCM (see page 11-7).

6. Start the engine, and let it idle for at least 2 minutes.

(cont'd)

DTC Troubleshooting (cont'd)

7. Check for Temporary DTCs or DTCs in the A/T SYSTEM with the HDS.

   Is DTC U0121 indicated in the A/T SYSTEM?

   YES—Check for poor connections or loose terminals at the PCM. If the PCM was updated, substitute a known-good PCM (see page 11-7), then go to step 6. If the PCM was substituted, go to step 1.

   NO—Go to step 8.

8. Monitor the OBD STATUS for U0121 in the DTCs MENU with the HDS.

   Does the HDS indicate PASSED?

   YES—If the PCM was updated, troubleshooting is complete. If the PCM was substituted, replace the original PCM (see page 11-238). If any other Temporary DTCs or DTCs were indicated in step 7, go to the indicated DTC's troubleshooting. ■

   NO—If the HDS indicates FAILED, check for poor connections or loose terminals at the PCM. If the PCM was updated, substitute a known-good PCM (see page 11-7), then go to step 6. If the PCM was substituted, go to step 1. If the HDS indicates NOT COMPLETED, go to step 6.

DTC U0122: F-CAN Malfunction (PCM-VSA Modulator-Control Unit)

NOTE: Before you troubleshoot, record all freeze data and any on-board snapshot with the HDS, and review General Troubleshooting Information (see page 14-3).

1. Turn the ignition switch to ON (II).

2. Clear the DTC with the HDS.

3. Check for Temporary DTCs or DTCs in the PGM-FI SYSTEM with the HDS.

   Is DTC U0122 indicated in the PGM-FI SYSTEM?

   YES—Go to the DTC U0122 troubleshooting in the PGM-FI SYSTEM (see page 11-179). ■

   NO—Go to step 4.

4. Check for Temporary DTCs or DTCs in the A/T SYSTEM with the HDS.

   Is DTC U0122 indicated in the A/T SYSTEM?

   YES—Go to step 5.

   NO—Intermittent failure, the system is OK at this time. If any other Temporary DTCs or DTCs were indicated, go to the indicated DTC's troubleshooting. ■

5. Update the PCM if it does not have the latest software (see page 11-236), or substitute a known-good PCM (see page 11-7).

6. Start the engine, and let it idle for at least 2 minutes.

7. Check for Temporary DTCs or DTCs in the A/T SYSTEM with the HDS.

   Is DTC U0122 indicated in the A/T SYSTEM?

   YES—Check for poor connections or loose terminals between the VSA modulator-control unit and the PCM. If the PCM was updated, substitute a known-good PCM (see page 11-7), then go to step 6. If the PCM was substituted, go to step 1.

   NO—Go to step 8.

8. Monitor the OBD STATUS for U0122 in the DTCs MENU with the HDS.

   Does the HDS indicate PASSED?

   YES—If the PCM was updated, troubleshooting is complete. If the PCM was substituted, replace the original PCM (see page 11-238). If any other Temporary DTCs or DTCs were indicated in step 7, go to the indicated DTC's troubleshooting.■

   NO—If the HDS indicates FAILED, check for poor connections or loose terminals at the VSA modulator-control unit and the PCM. If the PCM was updated, substitute a known-good PCM (see page 11-7), then go to step 6. If the PCM was substituted, go to step 1. If the HDS indicates NOT COMPLETED, go to step 6.

DTC U0129: F-CAN Malfunction (PCM-Servo Unit)

NOTE: Before you troubleshoot, record all freeze data and any on-board snapshot with the HDS, and review General Troubleshooting Information (see page 14-3).

1. Turn the ignition switch to ON (II).

2. Clear the DTC with the HDS.

3. Check for Temporary DTCs or DTCs in the PGM-FI System with the HDS.

   Is DTC U0129 indicated in the PGM-FI SYSTEM?

   YES—Go to the DTC U0129 troubleshooting in the PGM-FI System (see page 11-181).■

   NO—Go to step 4.

4. Check for Temporary DTCs or DTCs in the A/T SYSTEM with the HDS.

   Is DTC U0129 indicated in the A/T SYSTEM?

   YES—Go to step 5.

   NO—Intermittent failure, the system is OK at this time. If any other Temporary DTCs or DTCs were indicated, go to the indicated DTC's troubleshooting.■

5. Update the PCM if it does not have the latest software (see page 11-236), or substitute a known-good PCM (see page 11-7).

6. Start the engine, and let it idle for at least 2 minutes.

(cont'd)

DTC Troubleshooting (cont'd)

7. Check for Temporary DTCs or DTCs in the A/T SYSTEM with the HDS.

   Is DTC U0129 indicated in the A/T SYSTEM?

   YES—Check for poor connections or loose terminals at the PCM. If the PCM was updated, substitute a known-good PCM (see page 11-7), then go to step 6. If the PCM was substituted, go to step 1.

   NO—Go to step 8.

8. Monitor the OBD STATUS for U0129 in the DTCs MENU with the HDS.

   Does the HDS indicate PASSED?

   YES—If the PCM was updated, troubleshooting is complete. If the PCM was substituted, replace the original PCM (see page 11-238). If any other Temporary DTCs or DTCs were indicated in step 7, go to the indicated DTC's troubleshooting. ■

   NO—If the HDS indicates FAILED, check for poor connections or loose terminals at the PCM. If the PCM was updated, substitute a known-good PCM (see page 11-7), then go to step 6. If the PCM was substituted, go to step 1. If the HDS indicates NOT COMPLETED, go to step 6.

DTC U0155: F-CAN Malfunction (PCM-Gauge Control Module)

NOTE: Before you troubleshoot, record all freeze data and any on-board snapshot with the HDS, and review General Troubleshooting Information (see page 14-3).

1. Turn the ignition switch to ON (II).

2. Clear the DTC with the HDS.

3. Check for Temporary DTCs or DTCs in the PGM-FI SYSTEM with the HDS.

   Is DTC U0155 indicated in the PGM-FI SYSTEM?

   YES—Go to the DTC U0155 troubleshooting in the PGM-FI System (see page 11-183). ■

   NO—Go to step 4.

4. Check for Temporary DTCs or DTCs in the A/T SYSTEM with the HDS.

   Is DTC U0155 indicated in the A/T SYSTEM?

   YES—Go to step 5.

   NO—Intermittent failure, the system is OK at this time. If any other Temporary DTCs or DTCs were indicated, go to the indicated DTC's troubleshooting. ■

5. Update the PCM if it does not have the latest software (see page 11-236), or substitute a known-good PCM (see page 11-7).

6. Start the engine, and let it idle for at least 2 minutes.

7. Check for Temporary DTCs or DTCs in the A/T SYSTEM with the HDS.

   Is DTC U0155 indicated in the A/T SYSTEM?

   YES—Check for poor connections or loose terminals at the PCM. If the PCM was updated, substitute a known-good PCM (see page 11-7), then go to step 6. If the PCM was substituted, go to step 1.

   NO—Go to step 8.

8. Monitor the OBD STATUS for U0155 in the DTCs MENU with the HDS.

   Does the HDS indicate PASSED?

   YES—If the PCM was updated, troubleshooting is complete. If the PCM was substituted, replace the original PCM (see page 11-238). If any other Temporary DTCs or DTCs were indicated in step 7, go to the indicated DTC's troubleshooting. ■

   NO—If the HDS indicates FAILED, check for poor connections or loose terminals at the PCM. If the PCM was updated, substitute a known-good PCM (see page 11-7), then go to step 6. If the PCM was substituted, go to step 1. If the HDS indicates NOT COMPLETED, go to step 6.

DTC U1205: IMA-CAN Malfunction (PCM-MCM)

NOTE: Before you troubleshoot, record all freeze data and any on-board snapshot with the HDS, and review General Troubleshooting Information (see page 14-3).

1. Turn the ignition switch to ON (II).

2. Clear the DTC with the HDS.

3. Check for Temporary DTCs or DTCs in the PGM-FI SYSTEM with the HDS.

   Is DTC U1205 indicated in the PGM-FI SYSTEM?

   YES—Go to the DTC U1205 troubleshooting in the PGM-FI System (see page 11-185). ■

   NO—Go to step 4.

4. Check for Temporary DTCs or DTCs in the A/T SYSTEM with the HDS.

   Is DTC U1205 indicated in the A/T SYSTEM?

   YES—Go to step 5.

   NO—Intermittent failure, the system is OK at this time. If any other Temporary DTCs or DTCs were indicated, go to the indicated DTC's troubleshooting. ■

5. Update the PCM if it does not have the latest software (see page 11-236), or substitute a known-good PCM (see page 11-7).

6. Start the engine, and let it idle for at least 2 minutes.

(cont'd)

DTC Troubleshooting (cont'd)

7. Check for Temporary DTCs or DTCs in the A/T SYSTEM with the HDS.

   Is DTC U1205 indicated in the A/T SYSTEM?

   YES—Check for poor connections or loose terminals at the PCM. If the PCM was updated, substitute a known-good PCM (see page 11-7), then go to step 6. If the PCM was substituted, go to step 1.

   NO—Go to step 8.

8. Monitor the OBD STATUS for U1205 in the DTCs MENU with the HDS.

   Does the HDS indicate PASSED?

   YES—If the PCM was updated, troubleshooting is complete. If the PCM was substituted, replace the original PCM (see page 11-238). If any other Temporary DTCs or DTCs were indicated in step 7, go to the indicated DTC's troubleshooting.■

   NO—If the HDS indicates FAILED, check for poor connections or loose terminals at the PCM. If the PCM was updated, substitute a known-good PCM (see page 11-7), then go to step 6. If the PCM was substituted, go to step 1. If the HDS indicates NOT COMPLETED, go to step 6.

DTC U1206: IMA-CAN Malfunction (PCM-BCM Module)

NOTE: Before you troubleshoot, record all freeze data and any on-board snapshot with the HDS, and review General Troubleshooting Information (see page 14-3).

1. Turn the ignition switch to ON (II).

2. Clear the DTC with the HDS.

3. Check for Temporary DTCs or DTCs in the PGM-FI SYSTEM with the HDS.

   Is DTC U1206 indicated in the PGM-FI SYSTEM?

   YES—Go to the DTC U1206 troubleshooting in the PGM-FI System (see page 11-190).■

   NO—Go to step 4.

4. Check for Temporary DTCs or DTCs in the A/T SYSTEM with the HDS.

   Is DTC U1206 indicated in the A/T SYSTEM?

   YES—Go to step 5.

   NO—Intermittent failure, the system is OK at this time. If any other Temporary DTCs or DTCs were indicated, go to the indicated DTC's troubleshooting.■

5. Update the PCM if it does not have the latest software (see page 11-236), or substitute a known-good PCM (see page 11-7).

6. Start the engine, and let it idle for at least 2 minutes.

7. Check for Temporary DTCs or DTCs in the A/T SYSTEM with the HDS.

   Is DTC U1206 indicated in the A/T SYSTEM?

   YES—Check for poor connections or loose terminals at the PCM. If the PCM was updated, substitute a known-good PCM (see page 11-7), then go to step 6. If the PCM was substituted, go to step 1.

   NO—Go to step 8.

8. Monitor the OBD STATUS for U1206 in the DTCs MENU with the HDS.

   Does the HDS indicate PASSED?

   YES—If the PCM was updated, troubleshooting is complete. If the PCM was substituted, replace the original PCM (see page 11-238). If any other Temporary DTCs or DTCs were indicated in step 7, go to the indicated DTC's troubleshooting.■

   NO—If the HDS indicates FAILED, check for poor connections or loose terminals at the PCM. If the PCM was updated, substitute a known-good PCM (see page 11-7), then go to step 6. If the PCM was substituted, go to step 1. If the HDS indicates NOT COMPLETED, go to step 6.

Road Test

1. Start the engine, and warm it up to normal operating temperature (the radiator fan comes on).

2. Apply the parking brake, and block both rear wheels.

3. Start the engine, then shift the shift lever to D, while pressing the brake pedal. Press the accelerator pedal, and release it suddenly. The engine should not stall.

4. Repeat step 3 in all shift lever positions.

5. Connect the HDS to the DLC (A) located under the driver's side of the dashboard.

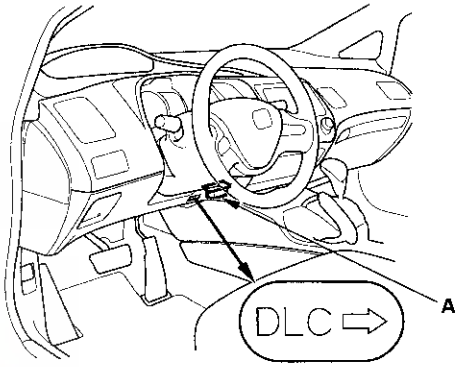

6. Turn the ignition switch to ON (II).

7. Make sure the HDS communicates with the PCM, and go to the A/T Data List. If it does not, go to the DLC circuit troubleshooting (see page 11-213).

(cont'd)

Road Test (cont'd)

8. Prepare the HDS to take a HIGH SPEED SNAPSHOT (refer to the HDS user's guide for more details if needed):

   - Select High Speed icon.
   - Select these parameters:
     - Vehicle Speed
     - Output Shaft (Driven Pulley) Speed rpm
     - Input Shaft (Drive Pulley) Speed rpm
     - Engine Speed
     - APP Sensor A (V)
     - CVTF Temp Sensor (V)
     - Battery Voltage
     - Brake Switch
   - Set the Trigger Type to Parameter.
   - Adjust the Parameter setting to APP Sensor A above 1.1 V.
   - Set the recording time to 60 seconds.
   - Set the Trigger point to —30 seconds.

9. Find a suitable level road. When you are ready to do the test, press OK on the HDS.

10. Monitor the HDS, and accelerate quickly until APP Sensor A reads 1.2 V. Maintain a steady throttle until the vehicle reaches a reasonable speed, then slow the vehicle, and come to a stop.

11. Save the snapshot if the entire event was recorded or increase the recording time setting as necessary and repeat step 10.

12. Adjust the Parameter setting to 2.2 V. Test-drive the vehicle again. While monitoring the HDS, accelerate quickly until APP Sensor A reads 2.3 V. Maintain a steady throttle until the vehicle reaches a reasonable speed, then slow the vehicle, and come to a stop.

13. Save the snapshot if the entire event was recorded or increase the recording time setting as necessary and repeat step 12.

14. Accelerate quickly until the accelerator pedal is to the floor. Maintain a steady pedal until the vehicle reaches to reasonable speed, then slow to a stop, and save the snapshot.

15. Review each snapshot individually, and compare APP Sensor A Voltage, Vehicle Speed, and Engine Speed to the following table:

D Position:

APP Sensor A voltage	Vehicle Speed	Engine Speed
1.2 V	25 mph (40 km/h)	900—1,300 rpm
2.3 V	25 mph (40 km/h)	1,650—2,250 rpm
	37 mph (60 km/h)	1,800—2,400 rpm
	62 mph (100 km/h)	2,200—2,800 rpm
4.4 V	25 mph (40 km/h)	4,050—4,650 rpm
	37 mph (60 km/h)	4,550—5,150 rpm
	62 mph (100 km/h)	5,050—5,650 rpm

S Position:

APP Sensor A voltage	Vehicle Speed	Engine Speed
1.2 V	25 mph (40 km/h)	1,900—2,300 rpm
	37 mph (60 km/h)	2,200—2,800 rpm
	62 mph (100 km/h)	2,900—3,500 rpm
2.3 V	25 mph (40 km/h)	2,800—3,400 rpm
	37 mph (60 km/h)	3,250—3,850 rpm
	62 mph (100 km/h)	3,850—4,450 rpm
4.4 V	25 mph (40 km/h)	4,300—4,900 rpm
	37 mph (60 km/h)	5,650—6,250 rpm
	62 mph (100 km/h)	5,700—6,300 rpm

L Position:

APP Sensor A voltage	Vehicle Speed	Engine Speed
1.2 V	25 mph (40 km/h)	2,900—3,500 rpm
	37 mph (60 km/h)	3,500—4,100 rpm
	62 mph (100 km/h)	4,100—4,700 rpm
2.3 V	25 mph (40 km/h)	3,700—4,300 rpm
	37 mph (60 km/h)	4,200—4,800 rpm
	62 mph (100 km/h)	4,650—5,250 rpm
4.4 V	25 mph (40 km/h)	4,400—5,000 rpm
	37 mph (60 km/h)	5,700—6,300 rpm
	62 mph (100 km/h)	5,700—6,300 rpm

16. Park the vehicle on a slope (about 16-degrees), apply the brake, and shift into P. Release the brake; the vehicle should not move.

    NOTE: Always use the brake to hold the vehicle, when stopped on an incline in gear. Depending on the grade of the incline, the vehicle could roll backwards if the brake is released.

Stall Speed Test

1. Make sure the transmission fluid is filled to the proper level (see page 14-175).
2. Apply the parking brake, and block all four wheels.
3. Connect the HDS to the DLC (A) located under the driver's side of the dashboard.

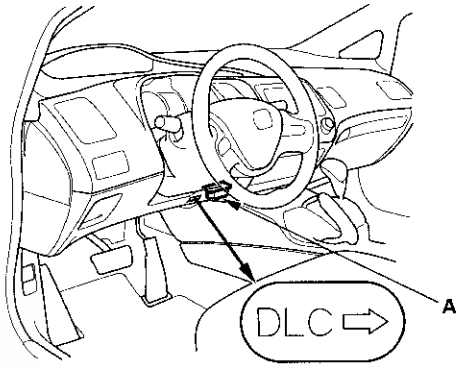

4. Turn the ignition switch to ON (II).
5. Make sure the HDS communicates with the PCM, and go to the A/T Data List. If it does not, go to the DLC circuit troubleshooting (see page 11-213).

(cont'd)

Stall Speed Test (cont'd)

6. Make sure the A/C switch is OFF.

7. Start the engine, and warm it up to normal operating temperature (the radiator fan comes on).

8. Shift the shift lever to D, while pressing the brake pedal firmly, then press the accelerator pedal for 6 to 8 seconds, and note the engine speed. Do not move the shift lever while raising the engine speed.

9. Allow 2 minutes for cooling, then repeat the test with the shift lever in S, L, and R.

   NOTE:
   - Do not test stall speed for more than 10 seconds at a time.
   - Stall speed tests should be used for diagnostic purposes only.
   - Stall speed tests should be the same in D, S, L, and R.
   - Do not test stall speed with the A/T pressure gauges installed.

   Stall Speed rpm
   Specification: 2,350 rpm
   Service Limit: 2,200—2,500 rpm

10. If the stall speeds are out of the service limit, the problems and probable causes are listed in the table.

Problem	Probable Causes
Stall speed rpm high in D, S, L, and R	• ATF pump output low • ATF pump defective • Clogged ATF strainer • Pressure high (PH) regulator valve stuck closed • Slipping forward clutch • Start clutch defective
Stall speed rpm high in R	• Slipping reverse brake • Start clutch defective
Stall speed rpm low in D, S, L, and R	• Engine output low • Start clutch defective • Pulley control valves A and B stuck

Pressure Test

Special Tools Required
- A/T high pressure gauge 07AAJ-PLYA100
- A/T pressure hose, 2,210 mm 07MAJ-PY4011A
- A/T pressure hose adapter 07MAJ-PY40120
- A/T oil pressure gauge set 07406-0020401
- A/T low pressure gauge 07406-0070301

NOTE:
- Do not test pressure for more than 10 seconds at a time.
- Do not move the shift lever while raising the engine speed.
- Disable the VSA (if equipped) by pressing the VSA OFF switch.
- ABS or VSA DTC(s) may come on during the test-drive. If the ABS or VSA DTC(s) come on, clear the DTC(s) with the HDS.

1. Make sure the transmission fluid is filled to the proper level (see page 14-175).

2. Raise the vehicle on a lift, or apply the parking brake, block the rear wheels, and raise the front of the vehicle. Make sure it is securely supported, and allow the front wheels to rotate freely.

3. Remove the front undercover (A) (see page 20-150) and the splash shield (B) (see page 20-148).

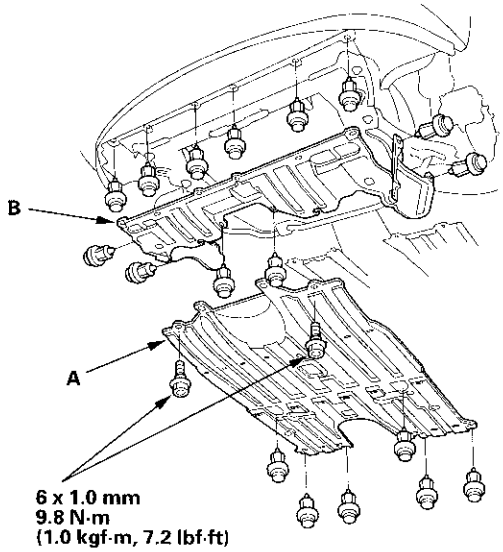

4. Turn the engine off, and connect the HDS to the DLC (A) located under the driver's side of the dashboard.

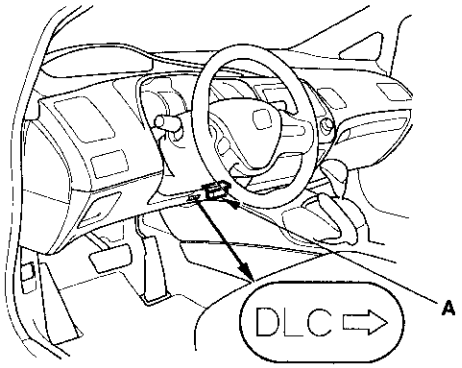

5. Turn the ignition switch to ON (II).

6. Make sure the HDS communicates with the PCM. If it does not, go to the DLC circuit troubleshooting (see page 11-213).

7. Use the following pressure gauge, pressure hose, and pressure hose adapter. Do not allow dust or other foreign particles to enter the ports while connecting the gauges.

NOTE:
- Drive pulley pressure and driven pulley pressure may be above 3,430 kPa (35.0 kgf/cm^2, 4,989 psi) when there is a transmission problem that causes the PCM to go into fail-safe mode.
- When troubleshooting, you must use the A/T high pressure gauge to measuring drive pulley pressure and driven pulley pressure.

A/T OIL PRESSURE GAUGE SET
07406-0020401

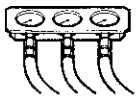

A/T LOW PRESSURE GAUGE
07406-0070301

A/T HIGH PRESSURE GAUGE
07AAJ-PLYA100
(2 Required)

A/T PRESSURE HOSE, 2,210 mm
07MAJ-PY4011A
(5 Required)

A/T PRESSURE HOSE ADAPTER
07MAJ-PY40120
(5 Required)

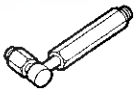

(cont'd)

Pressure Test (cont'd)

8. Connect the A/T oil pressure gauge set to the reverse brake pressure inspection port (A).

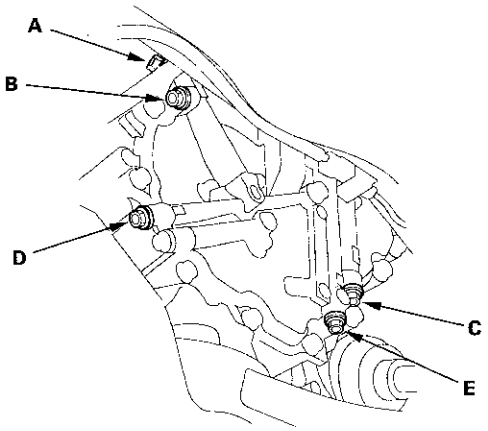

9. Connect the A/T oil pressure gauge set to the forward clutch pressure inspection port (B).

10. Connect the A/T low pressure gauge to the lubrication pressure inspection port (C).

11. Connect the A/T high pressure gauge to the drive pulley pressure inspection port (D) and to the driven pulley pressure inspection port (E).

12. Start the engine, and warm up the engine to normal operating temperature (the radiator fan comes on).

13. Shift the shift lever to D, and measure the forward clutch pressure at the forward clutch pressure inspection port while firmly pressing the brake pedal, and holding the engine speed at 1,700 rpm.

14. Shift to R, and measure the reverse brake pressure at the reverse brake pressure inspection port while firmly pressing the brake pedal, and holding the engine speed at 1,700 rpm.

15. Shift to N, and measure the drive pulley pressure at the drive pulley pressure inspection port while firmly pressing the brake pedal, and holding the engine speed at 1,700 rpm.

16. Measure the driven pulley pressure at the driven pulley pressure inspection port while firmly pressing the brake pedal, and holding the engine speed at 1,700 rpm.

17. Measure the lubrication pressure at the lubrication pressure inspection port while firmly pressing the brake pedal, and holding the engine speed at 3,000 rpm.

Pressure	Standard
Forward clutch	1.57—1.84 MPa (16.0—18.8 kgf/cm², 228—267 psi)
Reverse brake	1.57—1.84 MPa (16.0—18.8 kgf/cm², 228—267 psi)
Drive pulley	0.24—0.54 MPa (2.5—5.5 kgf/cm², 36—78 psi)
Driven pulley	0.83—1.13 MPa (8.5—11.5 kgf/cm², 120—164 psi)
Lubrication	0.25—0.40 MPa (2.5—4.1 kgf/cm², 36—58 psi)

18. Turn the engine off, then disconnect the pressure gauges from the pressure inspection ports.

19. Install the sealing bolts and new sealing washers to the pressure inspection ports, and tighten the bolts to 18 N·m (1.8 kgf·m, 13 lbf·ft). Do not reuse the old sealing washer.

20. If the pressures are out of standard, the problems and probable causes are listed in the table.

Problem	Probable causes
No or low forward clutch pressure	Forward clutch defective
No or low reverse brake pressure	Reverse brake defective
No or low drive pulley pressure	• ATF pump defective • PH regulator valve defective • Pulley control valve A defective • Pulley control valve B defective
Drive pulley pressure too high	• PH regulator valve defective • Pulley control valve A defective • Pulley control valve B defective • CVT drive pulley pressure control valve defective
No or low driven pulley pressure	• ATF pump defective • PH regulator valve defective • Pulley control valve A defective • Pulley control valve B defective • CVT driven pulley pressure control valve defective
Driven pulley pressure too high	PH regulator valve defective
No or low lubrication pressure	• ATF pump defective • Lubrication valve defective

21. Install the splash shield (see page 20-148) and the front undercover (see page 20-150).

22. Check the CVTF level (see page 14-175).

CVT Start Clutch Pressure Control Valve Solenoid Test

1. Remove the air cleaner assembly (see page 11-370) and the intake air duct.

2. Disconnect the solenoid harness connector.

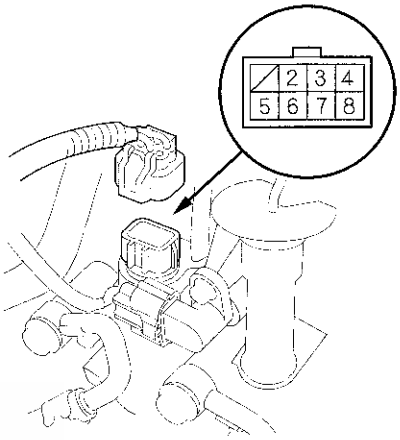

3. Measure the CVT start clutch pressure control valve solenoid resistance between solenoid harness connector terminals No. 4 and No. 8.

   Standard: 3.8—6.8 Ω

4. If the resistance is out of standard, check for open or short in the solenoid harness. If the wires are OK, replace the CVT start clutch pressure control valve (see page 14-168).

5. Connect a jumper wire from the battery positive terminal to solenoid harness connector terminal No. 4, and connect another jumper wire from the battery negative terminal to terminal No. 8. A clicking sound should be heard.

6. If no sound is heard, remove the CVT start clutch pressure control valve, and clean it, then recheck. Replace the CVT start clutch pressure control valve if a problem recurs (see page 14-168).

CVT Drive Pulley Pressure Control Valve Solenoid Test

1. Remove the air cleaner assembly (see page 11-370) and the intake air duct.

2. Disconnect the solenoid harness connector.

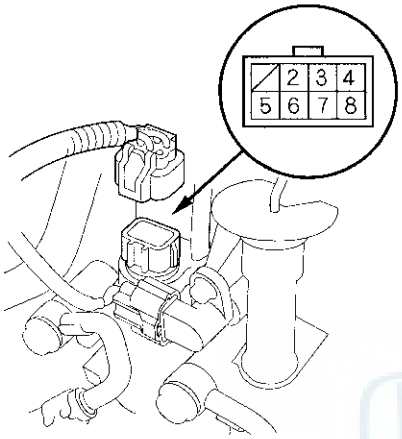

3. Measure the CVT drive pulley pressure control valve solenoid resistance between solenoid harness connector terminals No. 3 and No. 7.

   Standard: 3.8—6.8 Ω

4. If the resistance is out of standard, check for open or short in the solenoid harness. If the wires are OK, replace the CVT drive pulley pressure control valve (see page 14-169).

5. Connect a jumper wire from the battery positive terminal to solenoid harness connector terminal No. 3, and connect another jumper wire from the battery negative terminal to terminal No. 7. A clicking sound should be heard.

6. If no sound is heard, remove the CVT drive pulley pressure control valve, and clean it, then recheck. Replace the CVT drive pulley pressure control valve if a problem recurs (see page 14-169).

CVT Driven Pulley Pressure Control Valve Solenoid Test

1. Remove the air cleaner assembly (see page 11-370) and the intake air duct.

2. Disconnect the solenoid harness connector.

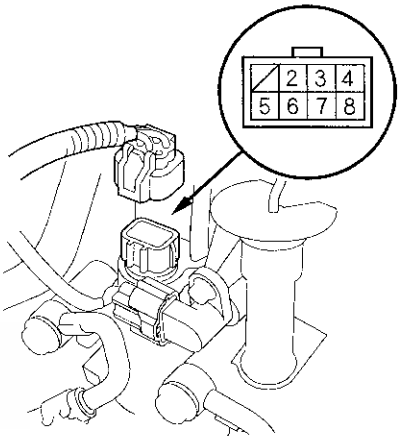

3. Measure the CVT driven pulley pressure control valve solenoid resistance between solenoid harness connector terminals No. 2 and No. 6.

   Standard: 3.8—6.8 Ω

4. If the resistance is out of standard, check for open or short in the solenoid harness. If the wires are OK, replace the CVT driven pulley pressure control valve (see page 14-169).

5. Connect a jumper wire from the battery positive terminal to solenoid harness connector terminal No. 2, and connect another jumper wire from the battery negative terminal to terminal No. 6. A clicking sound should be heard.

6. If no sound is heard, remove the CVT driven pulley pressure control valve, and clean it, then recheck. Replace the CVT driven pulley pressure control valve if a problem recurs (see page 14-169).

Inhibitor Solenoid Test

1. Remove the air cleaner assembly (see page 11-370) and the intake air duct.

2. Disconnect the solenoid harness connector.

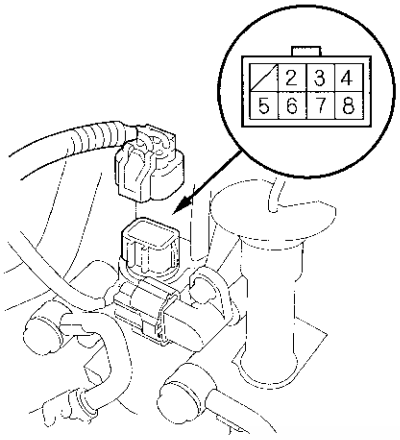

3. Measure the inhibitor solenoid resistance between solenoid harness connector terminal No. 5 and body ground.

   Standard: 11.7—21.0 Ω

4. If the resistance is out of standard, check for open or short in the solenoid harness. If the wire is OK, replace the inhibitor solenoid (see page 14-170).

5. Connect a jumper wire from the battery positive terminal to solenoid harness connector terminal No. 5, and connect another jumper wire from the battery negative terminal to body ground.
   A clicking sound should be heard.

6. If no sound is heard, replace the inhibitor solenoid (see page 14-170).

Lower Valve Body Removal and Installation

1. Raise the vehicle on a lift.

2. Disconnect the solenoid harness connector.

3. Remove the front undercover (A) (see page 20-150) and the splash shield (B) (see page 20-148).

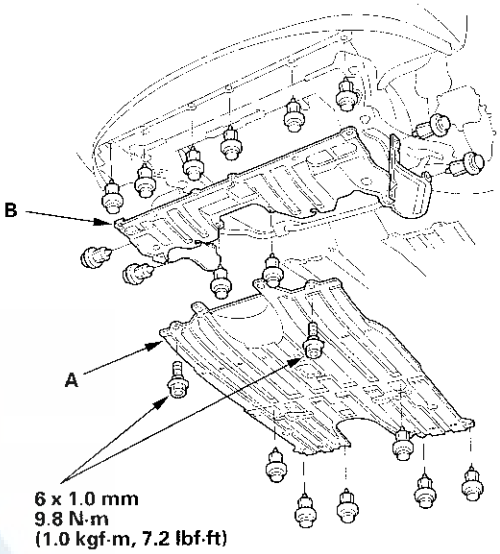

4. Remove the drain plug (A), and drain the CVT fluid (CVTF). Reinstall the drain plug and a new sealing washer (B).

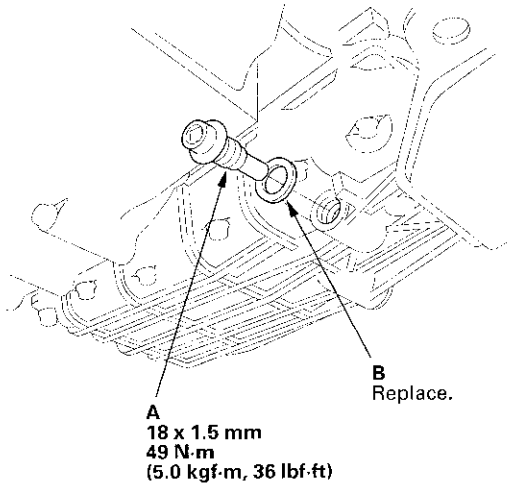

(cont'd)

Lower Valve Body Removal and Installation (cont'd)

5. Remove the ATF pan (A).

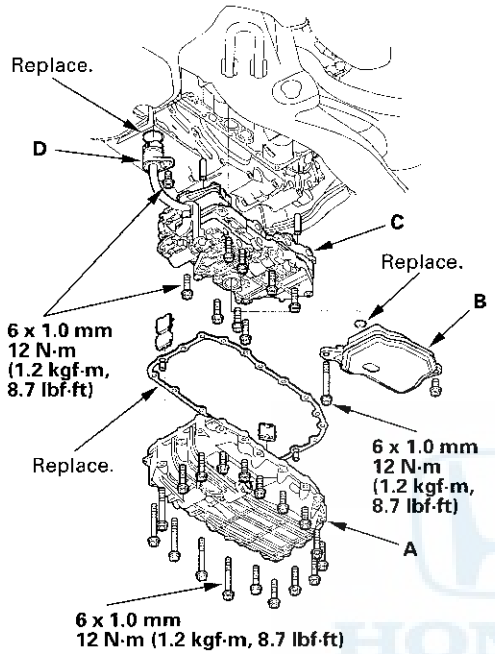

6. Remove the ATF strainer (B).

7. Remove the bolts securing the lower valve body (C), and remove the bolt securing the solenoid harness connector (D) while holding the lower valve body, then remove the lower valve body.

8. Install the lower valve body in the reverse order of removal.

9. Refill the transmission with CVTF (see step 5 on page 14-177).

10. Do the start clutch pressure control calibration procedures (see page 14-172) if any control valve of the lower valve body is replaced.

CVT Start Clutch Pressure Control Valve Replacement

1. Remove the lower valve body (see page 14-167).

2. Disconnect the CVT start clutch pressure control valve connector (A).

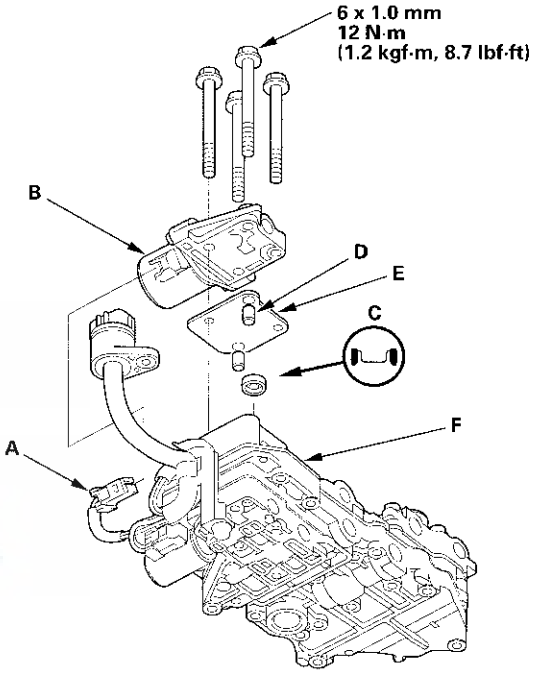

3. Remove the CVT start clutch pressure control valve (B).

4. Check that the filter (C) is in good condition, replace it if it is clogged or damaged.

5. Install a new CVT start clutch pressure control valve with the dowel pins (D) and the separator plate (E) on the lower valve body (F).

6. Connect the CVT start clutch pressure control valve connector.

7. Install the lower valve body (see page 14-167).

CVT Drive Pulley Pressure Control Valve Replacement

1. Remove the lower valve body (see page 14-167).

2. Remove the solenoid harness clamp (A).

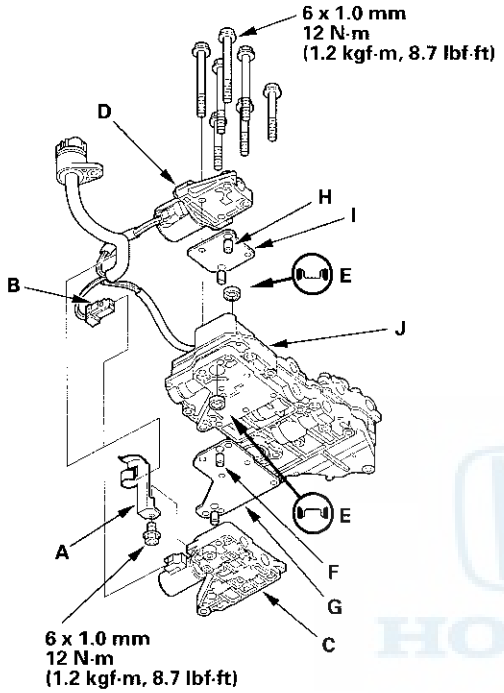

3. Disconnect the CVT drive pulley pressure control valve connector (B).

4. Remove the seven bolts, and remove the CVT drive pulley pressure control valve (C). The CVT start clutch pressure control valve (D) can also be removed.

5. Check that the filters (E) are in good condition, replace it if it is clogged or damaged.

6. Install a new CVT drive pulley pressure control valve with the dowel pins (F) and the separator plate (G), and the CVT start clutch pressure control valve with the dowel pins (H) and the separator plate (I) on the lower valve body (J).

7. Connect the CVT drive pulley pressure control valve connector.

8. Install the solenoid harness clamp.

9. Install the lower valve body (see page 14-167).

CVT Driven Pulley Pressure Control Valve Replacement

1. Remove the lower valve body (see page 14-167).

2. Disconnect the CVT driven pulley pressure control valve connector (A) and the inhibitor solenoid connector (B).

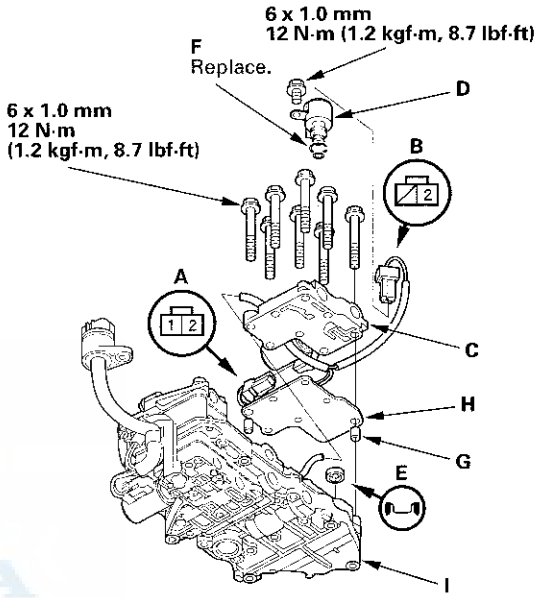

3. Remove the CVT driven pulley pressure control valve (C), and remove the inhibitor solenoid (D) from the CVT driven pulley pressure control valve.

4. Check that the filter (E) is in good condition, replace it if it is clogged or damaged.

5. Remove the O-rings (F) from the inhibitor solenoid.

6. Install new O-rings on the inhibitor solenoid, then install the inhibitor solenoid on a new CVT driven pulley pressure control valve.

7. Install a new CVT driven pulley pressure control valve with the dowel pins (G) and the separator plate (H) on the lower valve body (I).

8. Connect the CVT driven pulley pressure control valve connector and the inhibitor solenoid connector.

9. Install the lower valve body (see page 14-167).

Inhibitor Solenoid Replacement

1. Remove the lower valve body (see page 14-167).

2. Disconnect the inhibitor solenoid connector (A).

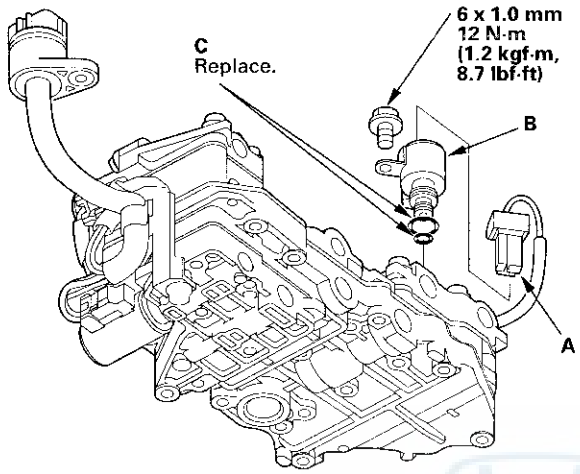

3. Remove the inhibitor solenoid (B), then remove the O-rings (C) from the inhibitor solenoid.

4. Install new O-rings on a new inhibitor solenoid, then install the inhibitor solenoid on the CVT driven pulley pressure control valve.

5. Connect the inhibitor solenoid connector.

6. Install the lower valve body (see page 14-167).

CVT Input Shaft (Drive Pulley) Speed Sensor Replacement

1. Remove the air cleaner assembly (see page 11-370) and the intake air duct.

2. Disconnect the CVT input shaft (drive pulley) speed sensor connector, then remove the CVT input shaft (drive pulley) speed sensor (A).

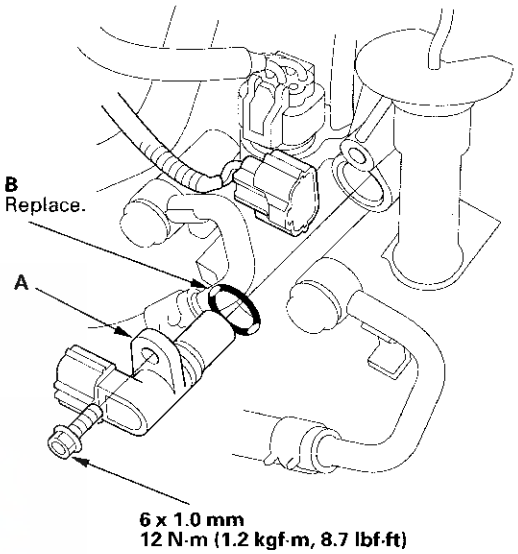

3. Install a new O-ring (B) on a new CVT input shaft (drive pulley) speed sensor, then install the CVT input shaft (drive pulley) speed sensor in the transmission housing.

4. Check the connector for rust, dirt, or oil, then connect the connector securely.

5. Install the air cleaner assembly (see page 11-370) and the intake air duct.

CVT Output Shaft (Driven Pulley) Speed Sensor Replacement

1. Remove the air cleaner assembly (see page 11-370) and the intake air duct.

2. Disconnect the CVT output shaft (driven pulley) speed sensor connector, then remove the CVT output shaft (driven pulley) speed sensor (A).

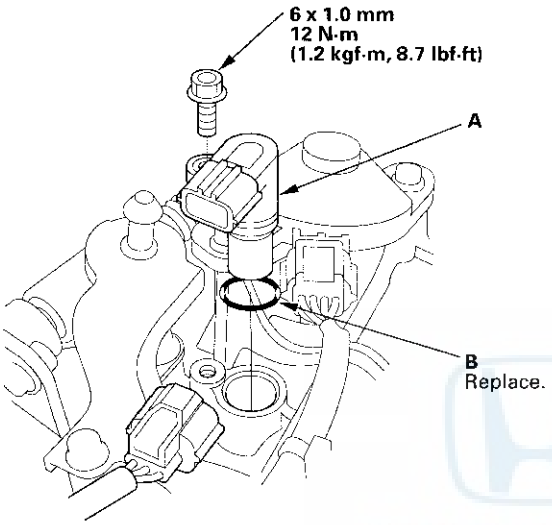

3. Install a new O-ring (B) on a new CVT output shaft (driven pulley) speed sensor, then install the CVT output shaft (driven pulley) speed sensor in the transmission housing.

4. Check the connector for rust, dirt, or oil, then connect the connector securely.

5. Install the air cleaner assembly (see page 11-370) and the intake air duct.

CVT Speed Sensor Replacement

1. Remove the air cleaner assembly (see page 11-370) and the intake air duct.

2. Disconnect the CVT speed sensor connector, then remove the CVT speed sensor (A).

'06 Model

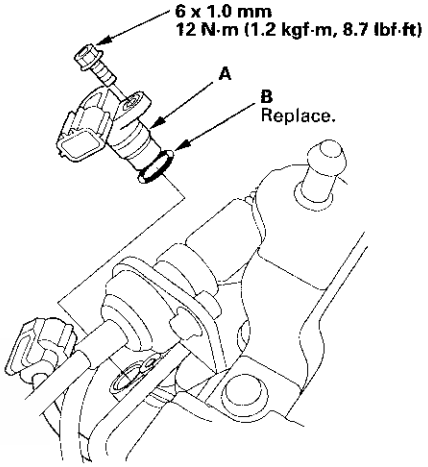

'07-09 Models

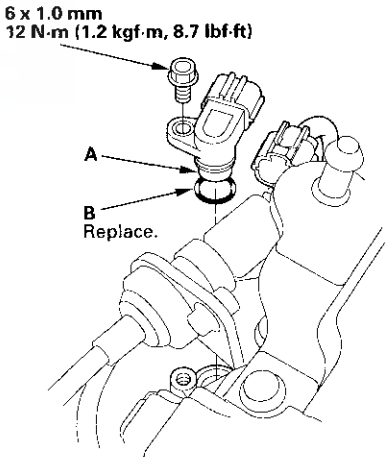

3. Install a new O-ring (B) on a new CVT speed sensor, then install the CVT speed sensor in the transmission housing.

4. Check the connector for rust, dirt, or oil, then connect the connector securely.

5. Install the air cleaner assembly (see page 11-370) and the intake air duct.

CVT Speed Sensor (Secondary) Replacement

'06 Model

1. Remove the air cleaner assembly (see page 11-370) and the intake air duct.

2. Disconnect the CVT speed sensor (secondary) connector, then remove the CVT speed sensor (secondary) (A).

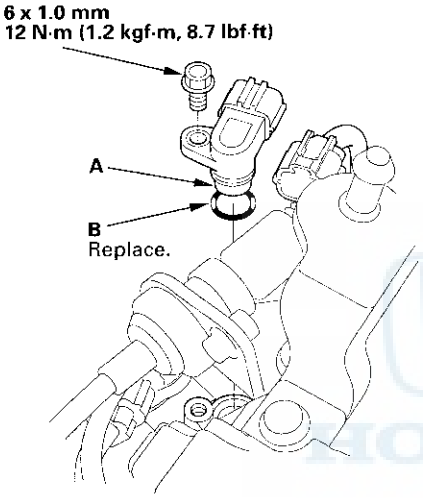

3. Install a new O-ring (B) on a new CVT speed sensor (secondary), then install the CVT speed sensor (secondary) in the transmission housing.

4. Check the connector for rust, dirt, or oil, then connect the connector securely.

5. Install the air cleaner assembly (see page 11-370) and the intake air duct.

Start Clutch Pressure Control Calibration Procedures

Do the start clutch pressure control calibration procedures whenever you do any of these actions:

- Replace PCM
- Reset PCM
- Update PCM
- Replace the transmission
- Overhaul the transmission
- Replace the engine assembly
- Overhaul the engine assembly
- Replace the lower valve body
- Replace the start clutch

Start Clutch Pressure Control Calibration Procedure mode

1. Connect the HDS to the DLC (A) located under the driver's side of the dashboard.

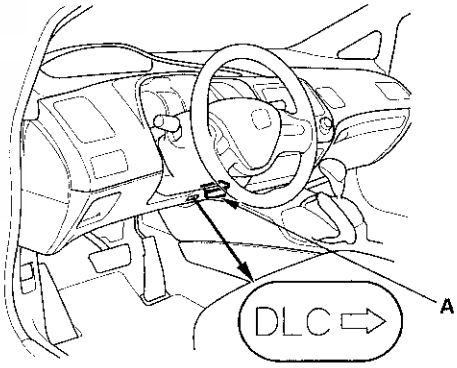

2. Turn the ignition switch to ON (II).

3. Make sure the HDS communicates with the PCM, and go to the A/T Data List. If it does not, go to the DLC circuit troubleshooting (see page 11-213).

4. Follow the HDS screen prompts in the Start Clutch Feedback Learn (see the HDS Operator's manual).

Calibration Procedure with SCS mode

1. Apply the parking brake, and block all four wheels securely.
2. Warm up the engine to normal operating temperature (the radiator fan comes on).
3. Make sure that the MIL does not come on and the D indicator does not blink. If the MIL comes on or the D indicator blinks, check the fuel and emissions system or the CVT control system.
4. Turn the ignition switch to LOCK (0).
5. Connect the HDS to the DLC, and follow the screen prompts to short-circuit the SCS signal terminal using the tester menu.
6. Press the brake pedal, and continue pressing the pedal until the calibration is completed.
7. Start the engine without load condition, but turn the headlights on. The headlights must be on during calibration.
8. Shift the shift lever to N, shift to D, S, then L, and return to N. Repeat this shifting pattern three times within 20 seconds after the engine is started.
9. Check that the D indicator comes on when the shift lever is in N, then goes off in 1 minute.
10. If the D indicator blinks or does not come on, or if the indicator comes on and stays on, turn the ignition switch to LOCK (0), and restart the procedure with step 5.
11. Shift to D, and check that the D indicator comes on, then goes off.
12. If the D indicator blinks or does not come on, or if the indicator comes on and stays on, turn the ignition switch to LOCK (0), and restart the procedure with step 5.
13. Turn the ignition switch to LOCK (0) to complete the procedure.
14. Test-drive the vehicle to verify that a problem does not occur on the start clutch pressure control system.

Calibration by Driving the Vehicle

1. Warm up the engine to normal operating temperature (the radiator fan comes on).
2. Make sure that the MIL does not come on and the D indicator does not blink. If the MIL comes on or the D indicator blinks, check the fuel and emissions system or the CVT control system.
3. Start the engine without load (headlights, audio system, blower fan, rear window defogger, A/C, etc.), and let it idle.
4. Check that the IMA charge gauge indicates no segments. If the IMA charge gauge indicates any segments, hold the engine speed between 3,500 rpm and 4,000 rpm without load (in Park or neutral) until the IMA battery level gauge (BAT) indicates at least three segments.
5. Drive the vehicle with the shift lever in D until the vehicle speed reaches 37 mph (60 km/h), then release the accelerator and decelerate without pressing the brake pedal for at least 5 seconds to reach completion.
6. Test-drive the vehicle for several minutes, and make sure the engine does not stall or flare when starting off.

Start Clutch Check

NOTE: If the transmission acts abnormally when the vehicle starts off, check the start clutch with the HDS.

1. Connect the HDS to the DLC (A) located under the driver's side of the dashboard.

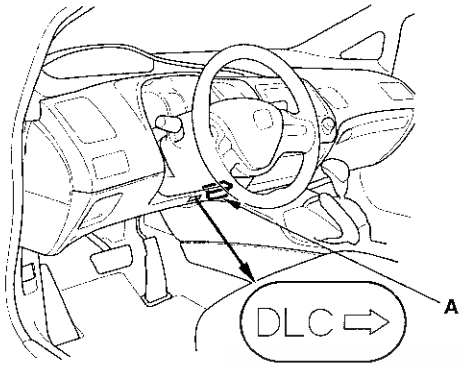

2. Turn the ignition switch to ON (II).

3. Make sure the HDS communicates with the PCM, and go to the A/T Data List. If it does not, go to the DLC circuit troubleshooting (see page 11-213).

4. Select Data List in the A/T Mode Menu, and monitor the Start Clutch Status with the HDS.

   - If the HDS indicates Normal, the start clutch is OK, then disconnect the HDS.
   - If the HDS indicates Unchecked, go to step 7.
   - If the HDS indicates Judder1 or Judder2, replace the CVT fluid (CVTF) (see page 14-175), then go to step 5.

5. Select Start Clutch Status Data Clear in the Miscellaneous Test Menu, and clear the start clutch status with the HDS.

6. Select Data List in A/T Mode Menu, and monitor the Start Clutch Status Diagnosis condition with the HDS.

   - If the HDS indicates Not ready, warm up the engine to normal operating temperature (the radiator fan comes on), then go to step 7.
   - If the HDS indicates Ready, go to step 7.

7. Start the engine, and shift the shift lever to D, while pressing the brake pedal.

8. Accelerate from a stop at over 50 % throttle (with 2.2 V of the APP sensor voltage by monitoring the HDS), then slow down to a stop.

9. Repeat step 8 two times.

10. Select Data List in the A/T Mode Menu, and make sure that the Start Clutch Status is Normal with the HDS.

11. To verify that the engine stalling and the judder when starting off does not occur, test-drive the vehicle for several minutes.

CVT Fluid Level Check

NOTE: Keep all foreign particles out of the transmission.

1. Park the vehicle on the level ground.

2. Start the engine, and warm it up to normal operating temperature (the radiator fan comes on), and turn the engine off. Do not allow the engine to run more than two cycles of the cooling fan.

   NOTE: Check the CVT fluid level within 60—90 seconds after turning the engine off. Higher fluid level may be indicated if the radiator fan comes on twice or more.

3. Remove the dipstick (yellow loop) (A), and wipe it with a clean cloth.

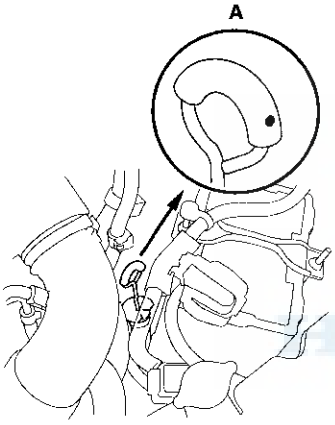

4. Insert the dipstick back into the tube.

5. Remove the dipstick, and check the CVT fluid level. It should be between the upper mark (A) and the lower mark (B) on the HOT level (C).

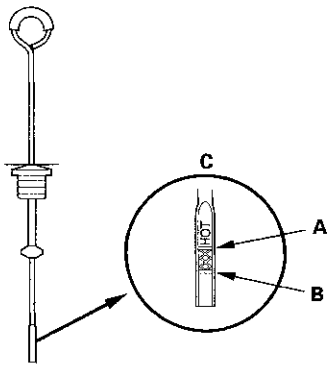

6. If the CVT fluid level is below the lower mark, check for fluid leaks at the transmission, the ATF filter, the ATF cooler hoses, the ATF cooler lines, and the ATF cooler line joints. If a problem is found, fix it before filling the transmission with CVTF.

   NOTE: If the vehicle is driven when the CVT fluid level is below the lower mark, one or more of these symptoms may occur:
   - Noise from transmission in D, S, L, and R.
   - Engine runs, but vehicle does not move in any position.
   - No shift to a higher ratio or lower ratio.
   - Flares while driving.
   - Excessive shock when accelerating and decelerating.
   - Vehicle does not creep on a flat road in D, S, and L.
   - Late shift after shifting from N to D or N to R.
   - Unstable rpm while driving.
   - Stall speed high.

7. If the level is above the upper mark, drain the CVTF to proper level (see step 4 on page 14-176).

(cont'd)

CVT Fluid Level Check (cont'd)

8. If necessary, fill the transmission with CVTF through the dipstick tube opening (A) to bring the fluid level between the upper mark and the lower mark of the dipstick. Do not fill the fluid above the upper mark. Always use Honda CVT fluid (CVTF). Using a non-Honda CVTF can affect shift quality.

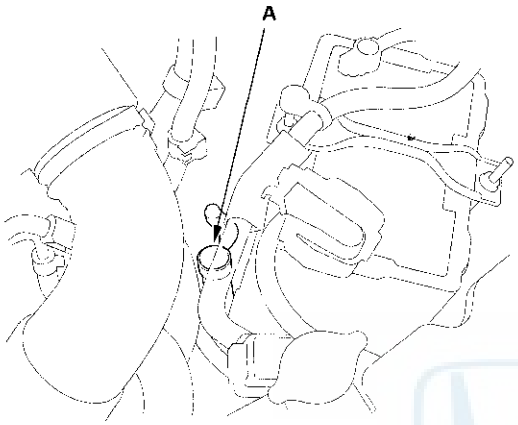

9. Insert the dipstick (A) back into the tube with the dot (B) on the handle facing to the left side of the vehicle.

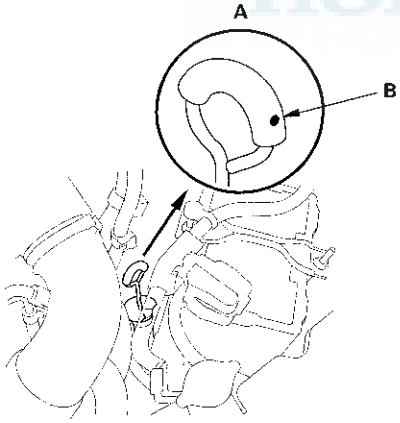

CVT Fluid Replacement

NOTE: Keep all foreign particles out of the transmission.

1. Start the engine, and warm it up to normal operating temperature (the radiator fan comes on).

2. Park the vehicle on level ground, and turn the engine off.

3. Remove the clips and the bolts securing the front of the undercover (see page 20-150), then open the front undercover (see page 20-150).

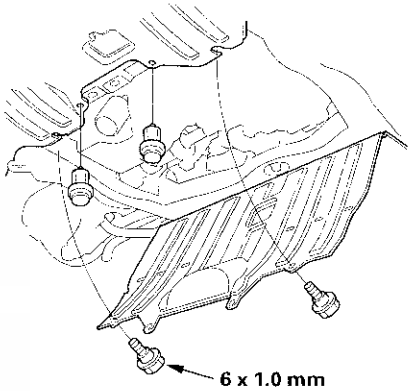

4. Remove the drain plug (A), and drain the CVT fluid (CVTF). Reinstall the drain plug with a new sealing washer (B).

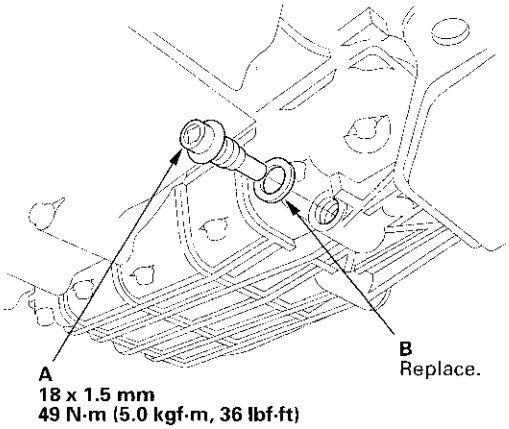

5. Refill the transmission with the recommended fluid through the dipstick tube opening (A) to bring it to the upper mark on the dipstick. Always use Honda CVT fluid (CVTF). Using a non-Honda CVTF can affect shift quality.

   CVT Fluid Capacity:
   2.8 L (3.0 US qt) at change
   5.1 L (5.4 US qt) at overhaul

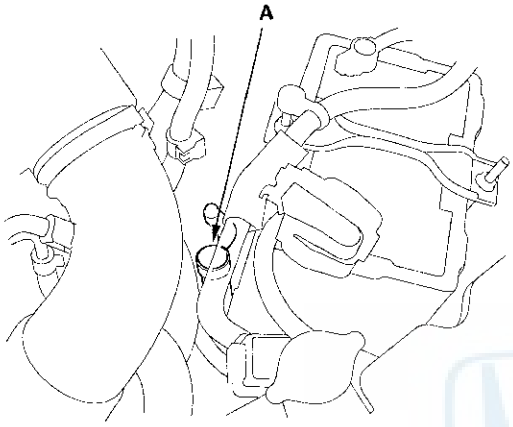

6. Check that the CVT fluid level is between the upper mark (A) and the lower mark (B) of the dipstick (see page 14-175).

7. Insert the dipstick back into the tube with the dot on the handle facing to the left side of the vehicle (see step 9 on page 14-176).

8. Install the front undercover (see page 20-150).

9. If the maintenance minder required to replace the CVTF, reset the maintenance minder (see page 3-6), and this procedure is complete. If the maintenance minder did not require you to replace the CVTF, go to step 10.

10. Connect the HDS to the DLC (A) located under the driver's side of the dashboard.

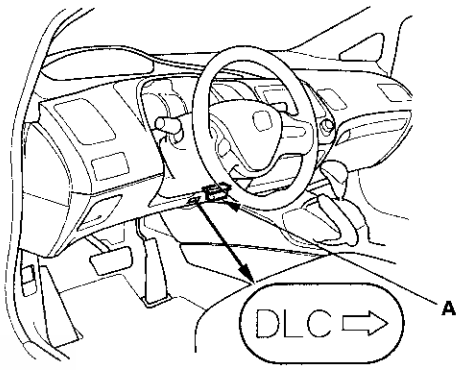

11. Turn the ignition switch to ON (II). Make sure the HDS communicates with the PCM. If it does not, go to the DLC circuit troubleshooting (see page 11-213).

12. Select BODY ELECTRICAL with the HDS.

13. Select ADJUSTMENT in the GAUGE MENU with the HDS.

14. Select RESET in the MAINTENANCE MINDER with the HDS.

15. Select MAINTENANCE SUB ITEM 3 RESET, and reset the CVTF life with the HDS.

Transmission Removal

Special Tools Required
- Universal eyelet 07AAK-SNAA120
- Engine support hanger, A and Reds AAR-T1256 *
- Front subframe adapter VSB02C000016 *
- 2006 Civic engine hanger VSB02C000025 *

* These special tools are available through the Honda Tool and Equipment Program 888-424-6857.

NOTE:
- Use fender covers to avoid damaging painted surfaces.
- A and Reds engine support hanger AAR-T1256 must be used with the side engine mount installed.

1. Remove the cowl cover and the under-cowl panel (see page 20-140).
2. Fix the hood in the vertical position.
3. Remove the front grille cover (see page 20-139).
4. Do the battery removal procedure (see page 22-63).
5. Remove the air cleaner assembly (see page 11-370) and the intake air duct.
6. Remove the reservoir, the reservoir bracket, the under-hood fuse/relay box bracket, the PCM, and the PCM bracket.
7. Remove the battery base and the resonator.
8. Raise the vehicle on a lift, and make sure it is securely supported.
9. Remove the front undercover (A) (see page 20-150) and the splash shield (B) (see page 20-148).

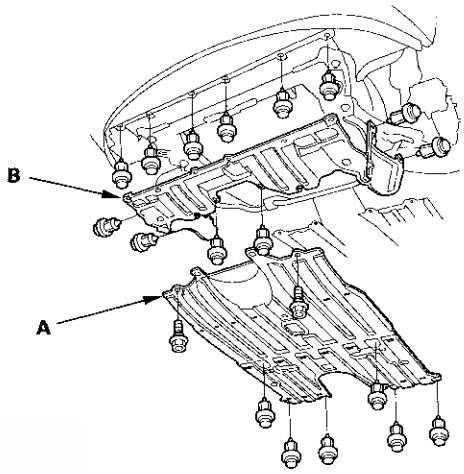

10. Remove the drain plug (A), and drain the CVT fluid (CVTF).

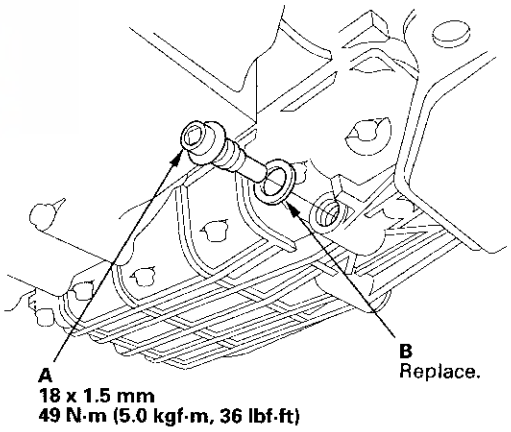

11. Reinstall the drain plug and a new sealing washer (B).

12. Remove the harness clamp (A) from its bracket (B), and remove the bolt securing the IMA harness cover bracket (C).

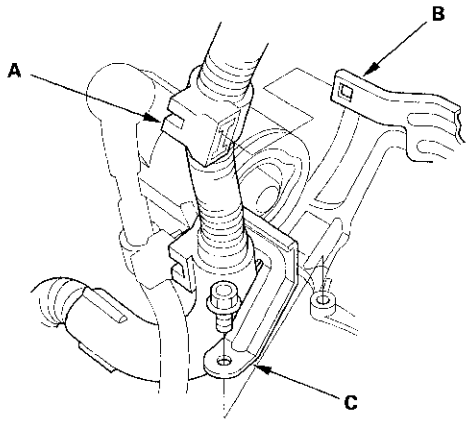

13. Remove the bolt securing the upper radiator hose clamp (A) on the starter (B).

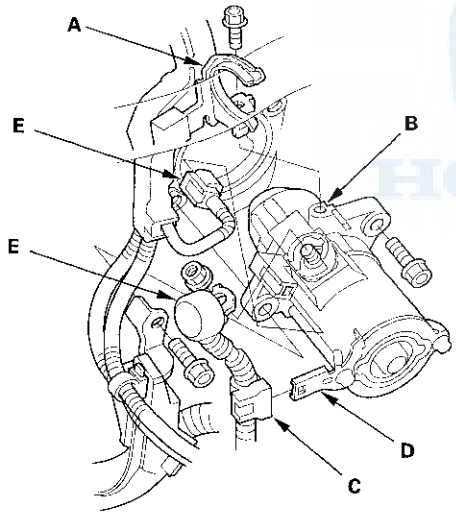

14. Remove the harness clamp (C) from its bracket (D), disconnect the starter cables (E), and remove the starter.

15. Disconnect the solenoid harness connector (A) and the CVT input shaft (drive pulley) speed sensor connector (B).

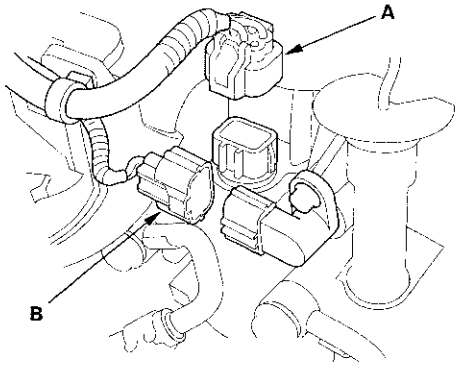

16. Disconnect the ATF cooler hoses (A) from the ATF cooler lines (B). Turn the end of the ATF cooler hoses up to prevent CVTF from flowing out, then plug the ATF cooler hoses and the ATF cooler lines.

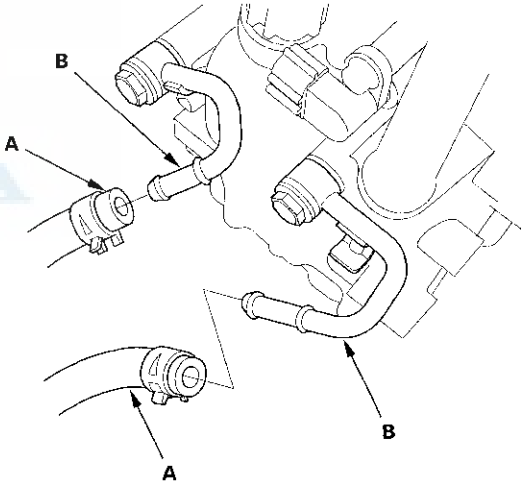

(cont'd)

Transmission Removal (cont'd)

17. Remove the air cleaner housing mounting bracket (A).

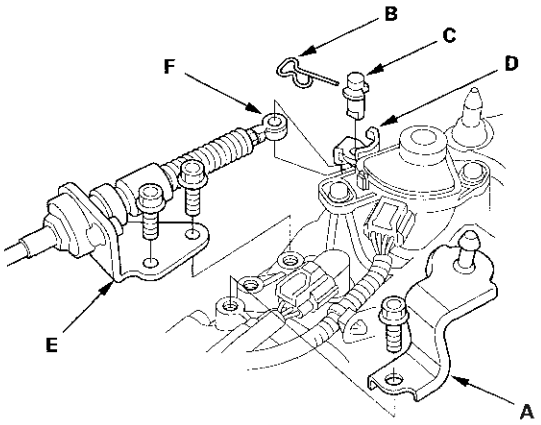

18. Remove the snap pin (B) and the control pin (C) from the selector control lever (D).

19. Remove the bolts securing the shift cable bracket (E), then separate the shift cable (F) from the selector control lever. Do not bend the shift cable excessively.

20. '06 model: Disconnect the transmission range switch connector (A), and remove the harness clamp (B) from its bracket (C).

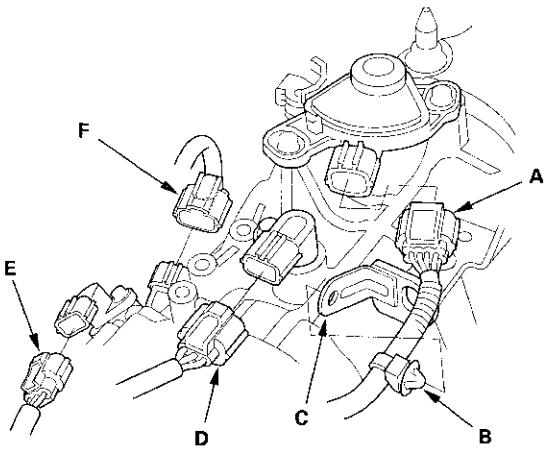

21. '06 model: Disconnect the CVT output shaft (driven pulley) speed sensor connector (D), the CVT speed sensor connector (E), and the CVT speed sensor (secondary) connector (F).

22. '07-09 models: Disconnect the transmission range switch connector (A), and remove the harness clamp (B) from its bracket (C).

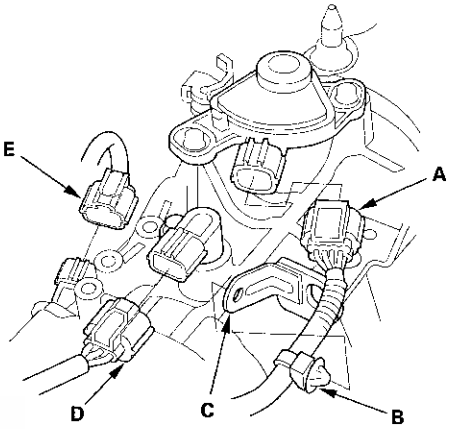

23. '07-09 models: Disconnect the CVT output shaft (driven pulley) speed sensor connector (D), and the CVT speed sensor connector (E).

24. Remove the harness clamps from the clamp bracket.

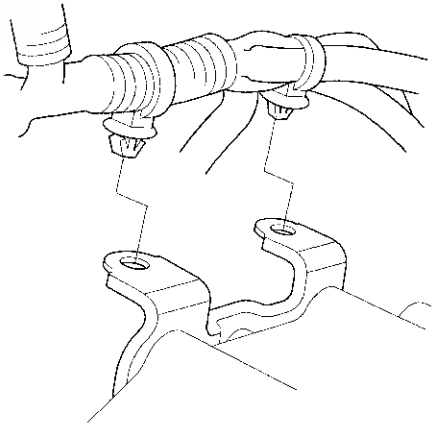

25. Remove the drive plate bolts (six) at the opening of the starter while rotating the engine crankshaft pulley.

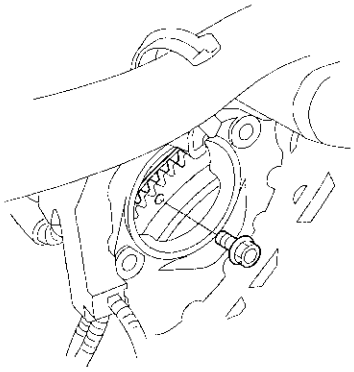

26. Disconnect the EVAP canister purge valve connector (A), and remove the bolts securing the connector bracket (B).

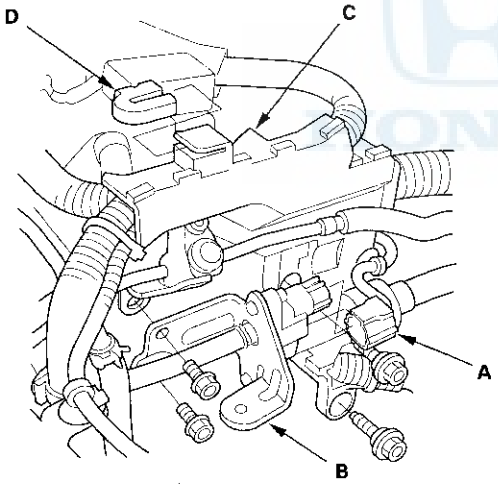

27. Remove the bolts securing the harness cover (C), and remove the harness cover from its bracket (D).

28. Install the universal eyelet (07AAK-SNAA120) to the bolt hole (A) with 8 x 1.25 mm bolt (B) and spacers (C).

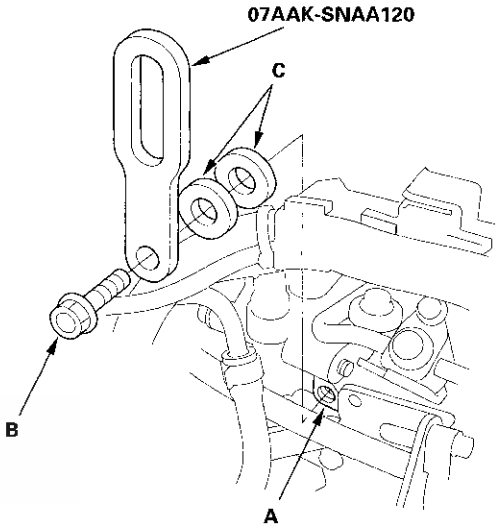

29. Install the front leg assembly (A), the hook (B), and the wing nut (C) from an A and Reds engine support hanger (AAR-T1256) onto the engine hanger (VSB02C000025). Carefully position the engine hanger on the vehicle, and attach the hook to the slotted hole in the universal eyelet (07AAK-SNAA120). Tighten the wing nut by hand to lift and support the engine.

NOTE: Be careful when working around the windshield.

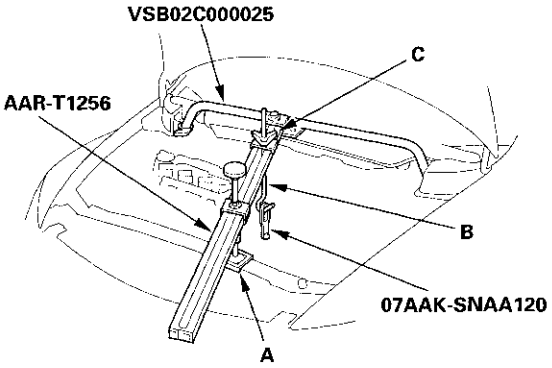

(cont'd)

Transmission Removal (cont'd)

30. Remove the nuts and the bolt securing both lower arm and ball joint, and separate the lower arms from the ball joints.

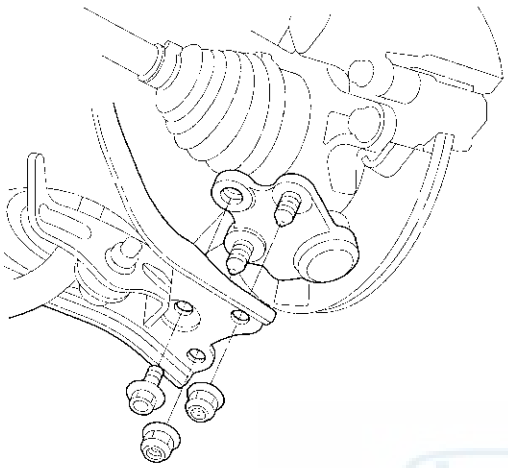

31. Remove both mid stiffeners.

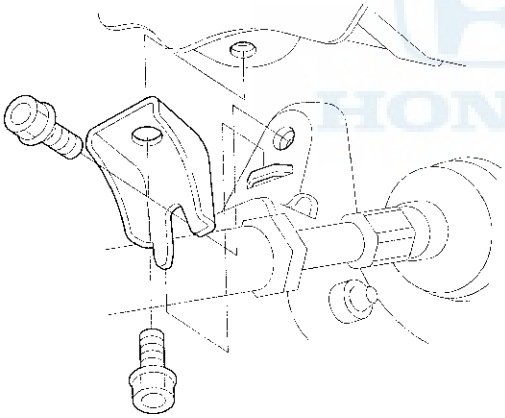

32. Remove the exhaust pipe mount rubber (A).

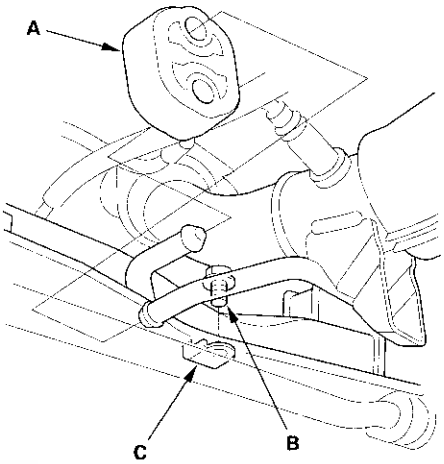

33. Remove the bolt (B) securing the steering gearbox heat shield (C).

34. Remove the steering gearbox bracket mounting bolts.

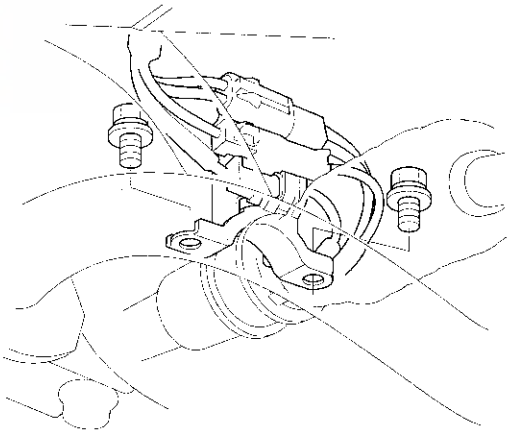

35. Remove the steering gearbox mounting bolt (A), the stiffener mounting bolt (B), and the stiffener (C).

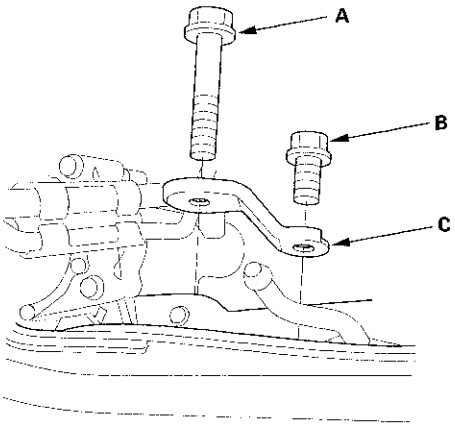

36. Remove the steering gearbox mounting bolt (A), the stiffener mounting bolt (B), and the stiffener (C).

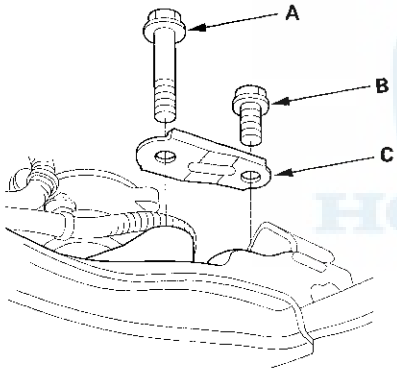

37. Remove the lower torque rod bolts (A).

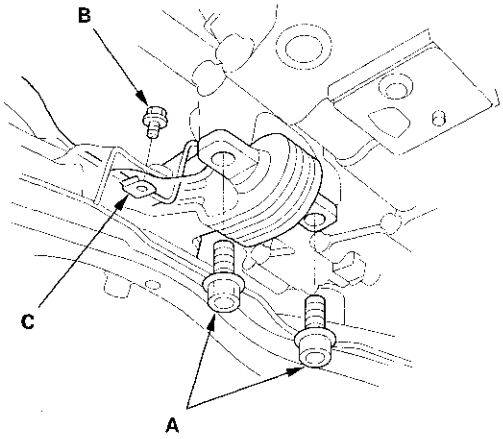

38. Remove the bolt (B) securing the steering gearbox heat shield (C).

39. Remove the bolts securing the ATF filter bracket (A) and the IMA harness cover (B).

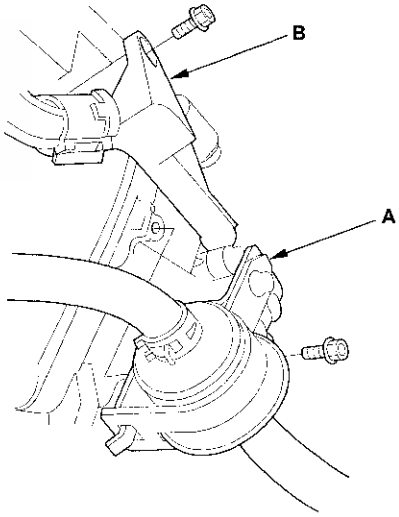

(cont'd)

Transmission Removal (cont'd)

40. Make reference marks (A) on the front subframe (B) that line up with the edge (C) of the body.

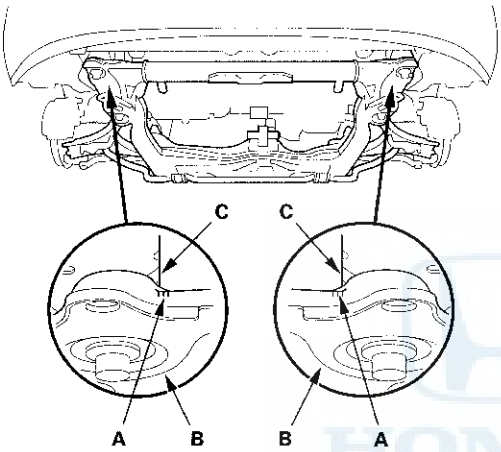

41. Attach the front subframe adapter (VSB02C000016) to the front subframe by looping the strap (A) over the front of the front subframe, then secure the strap with the stop (B), then tighten the wing nut (C).

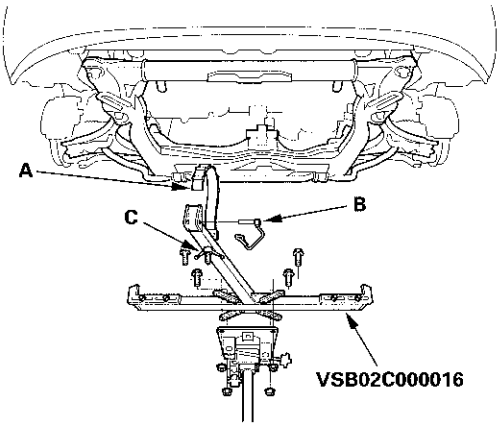

42. Raise the jack and line up the slots in the arms with the bolt holes on the corner of the jack base, then tighten the bolts.

43. Remove the four bolts securing the front subframe, and lower the front subframe.

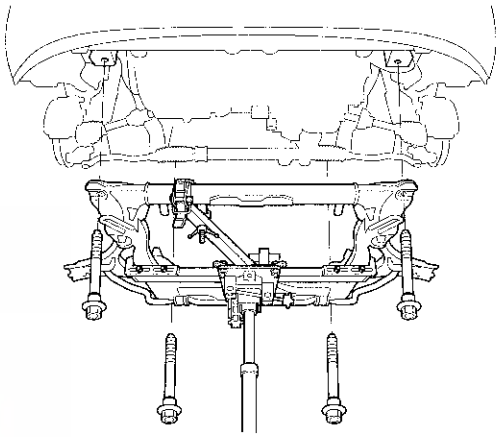

44. Secure the steering gearbox to the body with a rope.

45. Remove the driveshafts from the differential and the intermediate shaft (see step 8 on page 16-5). Coat all precision machined surfaces with clean engine oil, then put plastic bags over driveshaft ends.

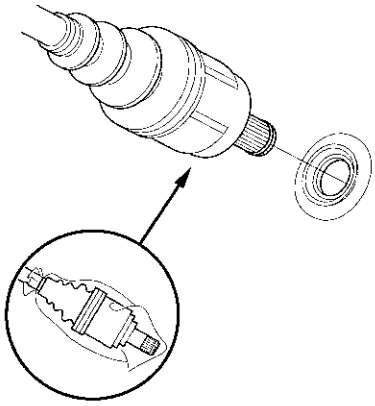

46. Remove the heat shield (A) and the intermediate shaft (B).

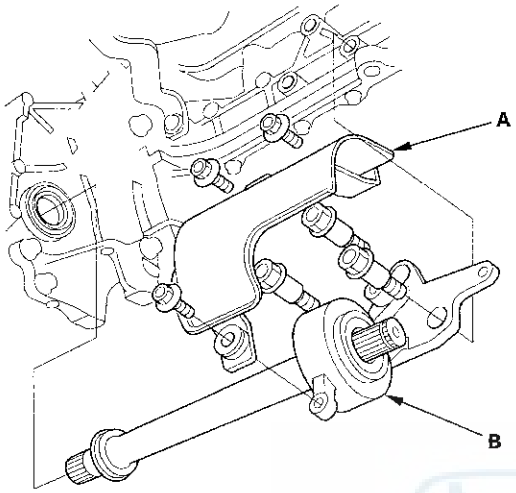

47. Coat all precision machined surfaces with clean engine oil, then put plastic bags over both ends of the intermediate shaft.

48. Remove the ground cable terminal (A).

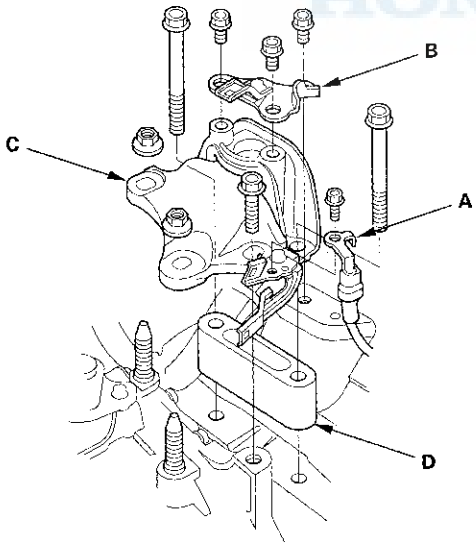

49. Remove the bolts and the nuts, and remove the transmission mount cover (B), the transmission mount/bracket (C), and the transmission mount foot (D).

50. Remove the upper and front transmission housing mounting bolts.

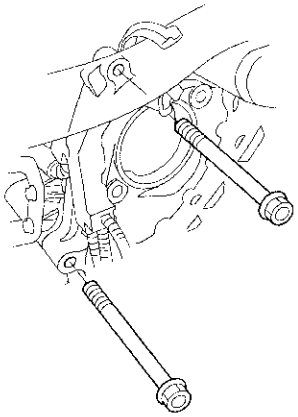

51. Place a jack under the transmission.

52. Remove the lower torque rod bracket.

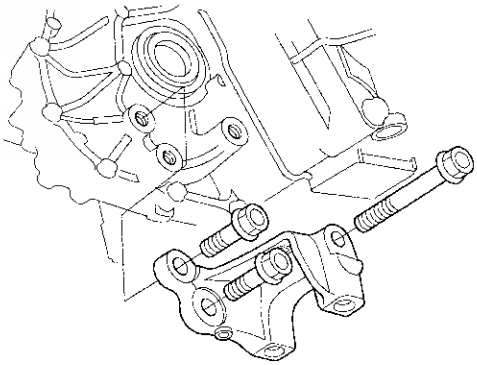

(cont'd)

Transmission Removal (cont'd)

53. Remove the rear and lower transmission housing mounting bolts.

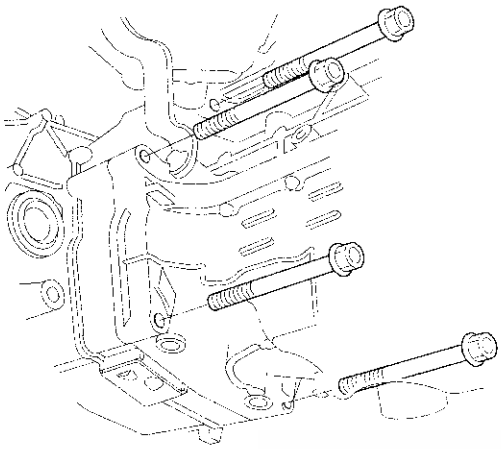

54. Lower the transmission by loosening the wing nut of the engine support hanger, and tilt the engine just enough for the transmission to clear the side frame.

55. Slide the transmission away from the motor to remove it from the vehicle.

56. Remove the flywheel assembly with the rubber sealing ring and the dowel pins.

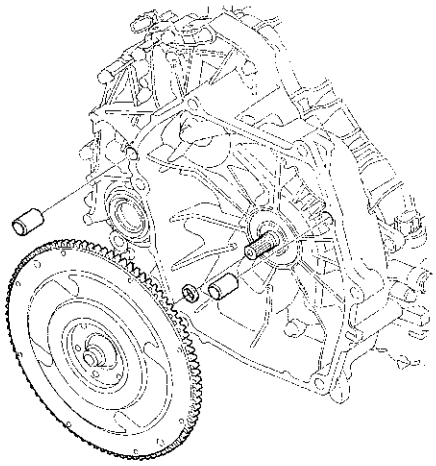

Drive Plate Removal and Installation

1. Remove the transmission assembly (see page 14-178).

2. Inspect the drive plate (A) and the flywheel support (B), and replace it if it is damaged.

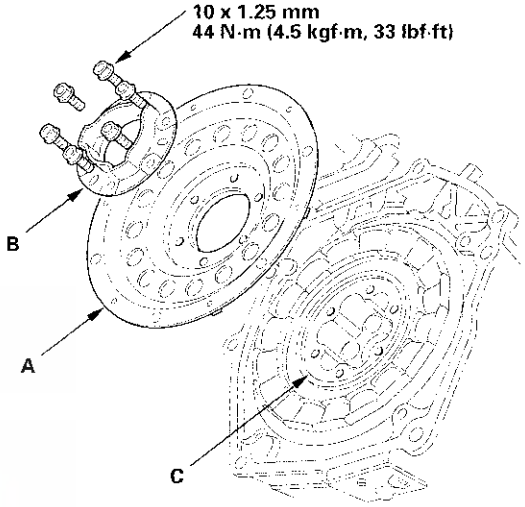

3. Install the drive plate and the flywheel support on the motor rotor (C), and secure them with the bolts, if removed.

   NOTE:
   - The motor rotor contains very strong magnets and should be handled with special care.
   - Extra special care must be taken on the installation of the drive plate, it may suddenly be pulled toward the motor with great force causing serious hand or finger injury, or damaged components.
   - Keep pieces of metal and all foreign particles out of the motor rotor during the transmission removal.

4. Install the transmission assembly (see page 14-187).

Transmission Installation

Special Tools Required
- Universal eyelet 07AAK-SNAA120
- Engine support hanger, A and Reds AAR-T1256 *
- Front subframe adapter VSB02C000016 *
- 2006 Civic engine hanger VSB02C000025 *

* These special tools are available through the Honda Tool and Equipment Program 888-424-6857.

NOTE: Use fender covers to avoid damaging painted surfaces.

1. Clean the ATF cooler (see page 14-196).

2. Remove the used grease in the flywheel hub cap and the flywheel splines.

3. Fill the inside of the flywheel hub cap (A) with about 1.0 to 2.0 g (0.04 to 0.07 oz.) and coat the flywheel hub splines (B) of Super High Temp Urea Grease (P/N 08798-9002). Do not overfill the flywheel hub cap with grease.

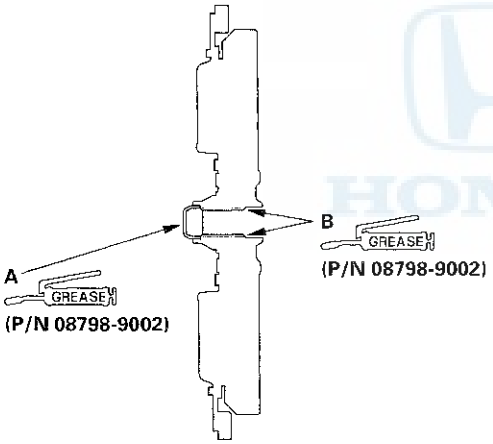

4. Install a new rubber sealing ring (A) on the input shaft (B).

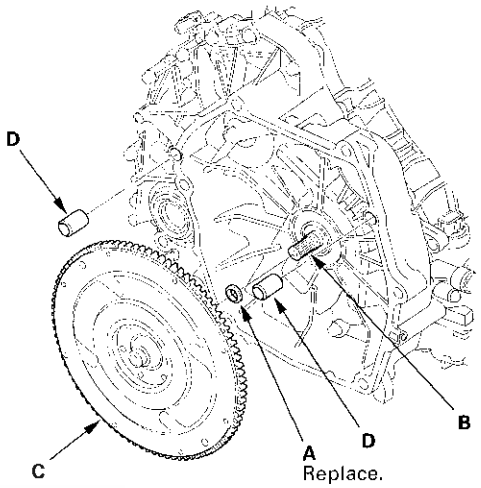

5. Install the flywheel (C) on the input shaft, and install the 14 mm dowel pins (D) in the flywheel housing.

6. Place the transmission on a jack, and raise the transmission to the engine level, then fit the transmission to the motor housing/engine.

7. Install the rear and lower transmission housing mounting bolts.

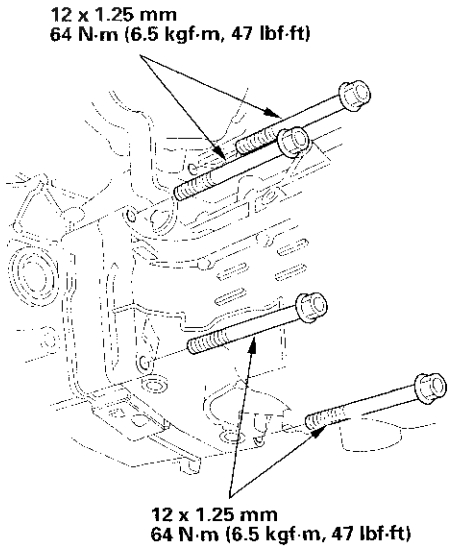

(cont'd)

Transmission Installation (cont'd)

8. Install the upper and front transmission housing mounting bolts.

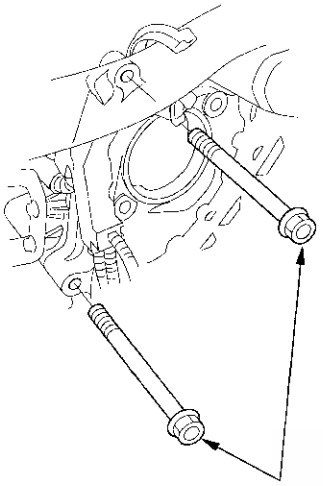

9. Install the transmission mount foot (A) and the transmission mount/bracket (B) on the body with 12 x 1.25 mm bolts (C) loosely.

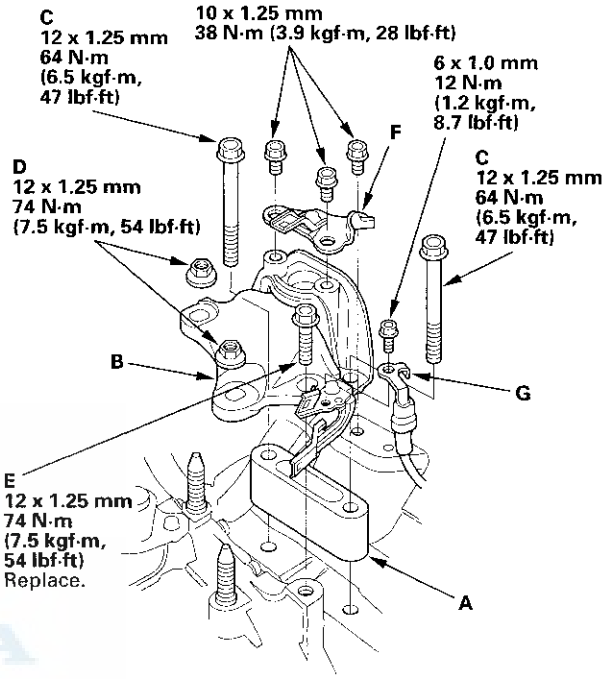

10. Secure the transmission mount bracket on the transmission with the nuts (D) and new bolt (E), and tighten the 12 x 1.25 mm bolts (C) to the specified torque.

11. Install the transmission mount cover (F) and the ground cable terminal (G).

12. Install the lower torque rod bracket with new bolts.

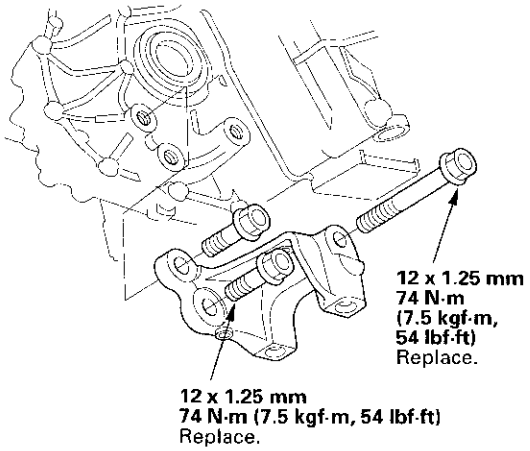

13. Install a new set ring (A) on the intermediate shaft (B).

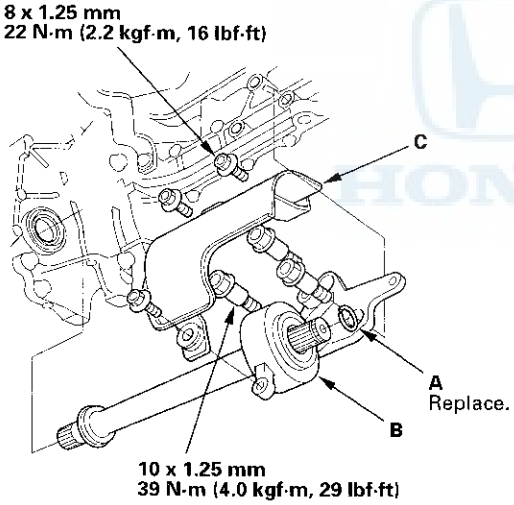

14. Install the intermediate shaft and the heat shield (C).

15. Install a new set ring (A) on the left driveshaft (B).

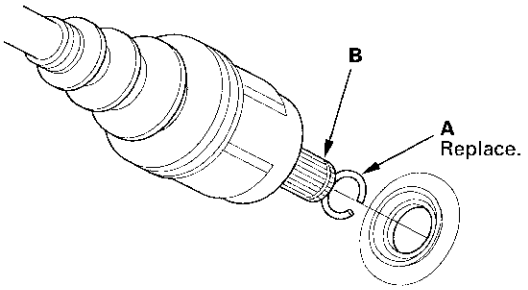

16. Clean the areas where the left driveshaft contacts the transmission (differential) with solvent, and dry with compressed air. Then install the left driveshaft in the differential, be sure not to allow dust or other foreign particles to enter the transmission. Turn the steering knuckle fully outward, and slide the driveshaft into the differential until you feel its set ring fully engage the side gear.

17. Install the right driveshaft over the intermediate shaft. Turn the steering knuckle fully outward, and slide the driveshaft over the intermediate shaft until you feel the set ring of the intermediate shaft fully engage the driveshaft.

(cont'd)

Transmission Installation (cont'd)

18. Set the front subframe adapter (VSB02C000016) to the front subframe by looping the strap (A) over the front of the front subframe, then secure the strap with the stop (B), then tighten the wing nut (C).

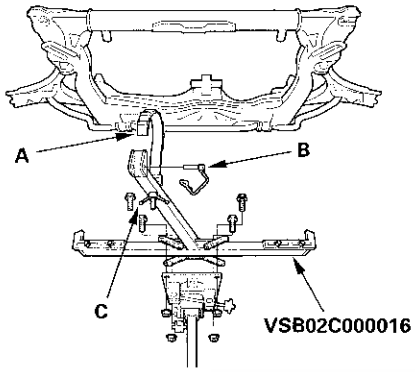

19. Line up the slots in the arms with the bolt holes on the corner of the jack base, and tighten the bolts, then lift the front subframe up to the body.

20. Loosely install new front subframe mounting bolts.

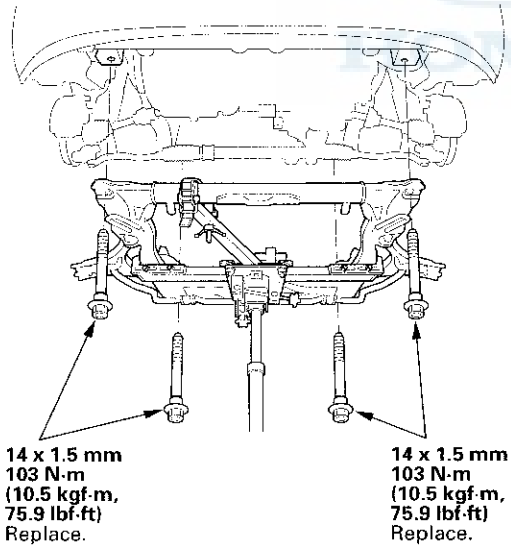

21. Align the reference marks (A) on the front subframe (B) with the edge (C) of the body, and tighten the mounting bolts to the specified torque.

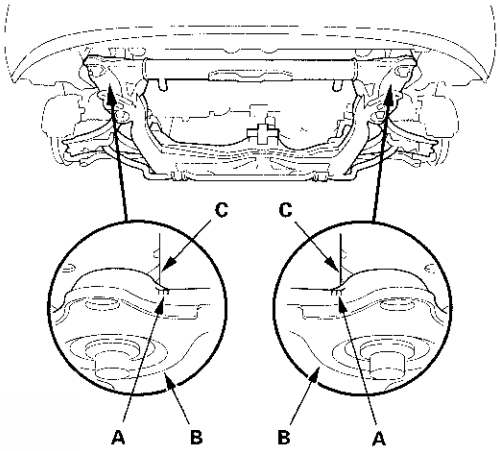

22. Secure the lower torque rod with the bolts.

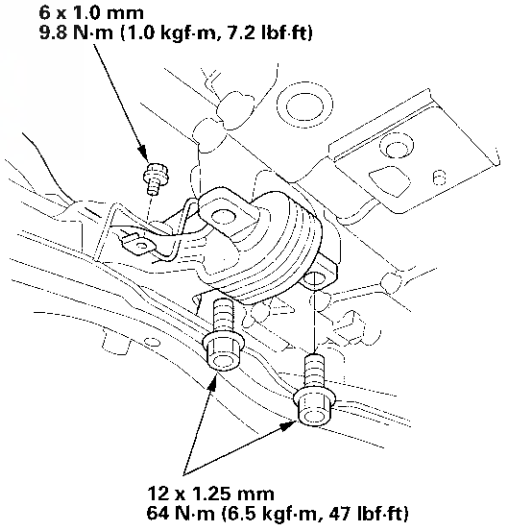

23. Secure the steering gearbox heat shield with the bolt.

24. Remove the engine support hanger.

25. Position the steering gearbox on the gearbox mounting bracket of the front subframe.

26. Install the gearbox stiffener (A) and the stiffener mounting bolts, and tighten the bolts loosely.

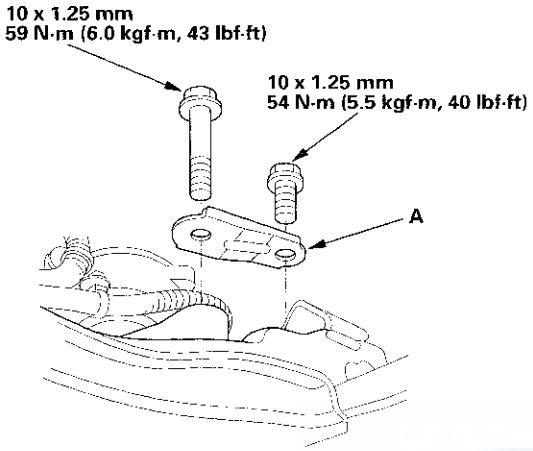

27. Install the gearbox stiffener (A) and the stiffener mounting bolts, and tighten the bolts loosely.

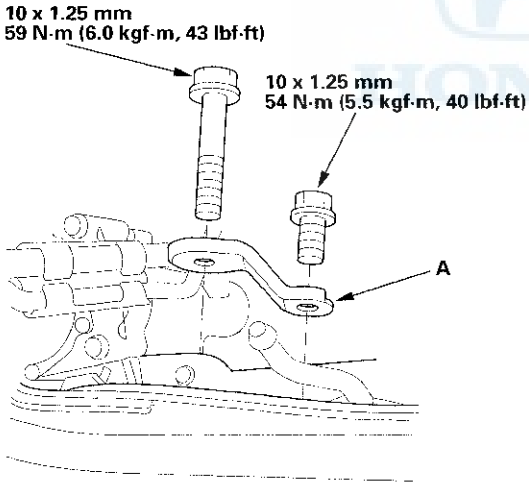

28. Install the steering gearbox mounting bracket bolts.

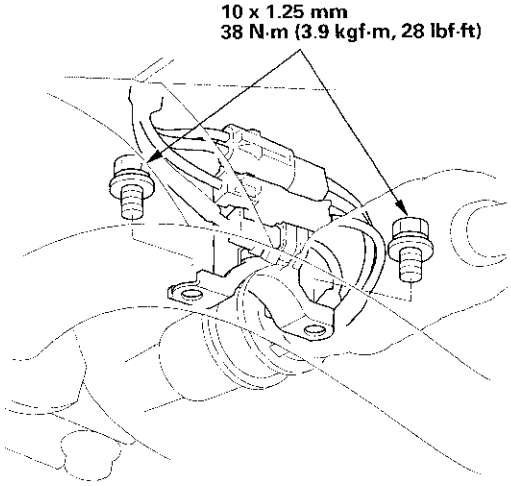

29. Tighten the steering gearbox mounting bolts and the stiffener mounting bolts to the specified torque.

30. Install both mid stiffeners with new bolts.

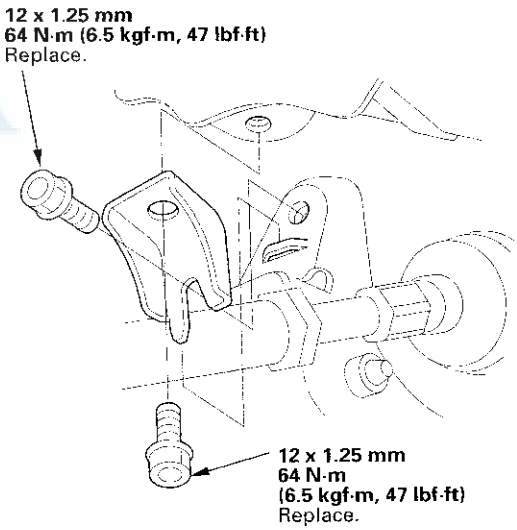

(cont'd)

Transmission Installation (cont'd)

31. Install both of the lower arms (A) to the ball joints (B), and loosely install new mounting nuts and bolts.

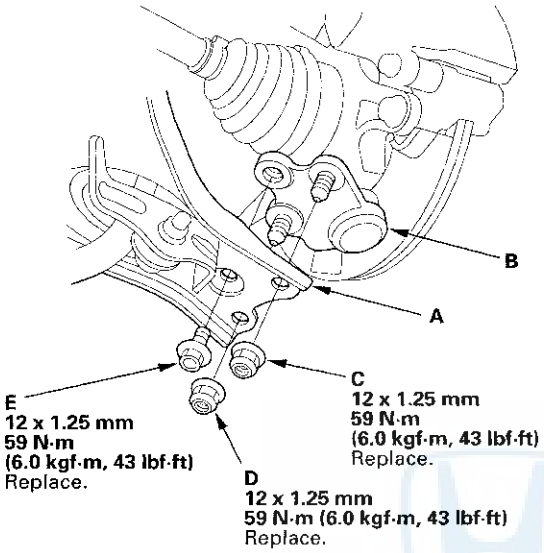

32. Loosely tighten the nuts and the bolts in the following order; the nut on the front (C), the nut on the rear (D), then the bolt (E) (see page 18-22).

33. Secure the steering gearbox heat shield with the bolt.

34. Install the exhaust pipe mount rubber (A).

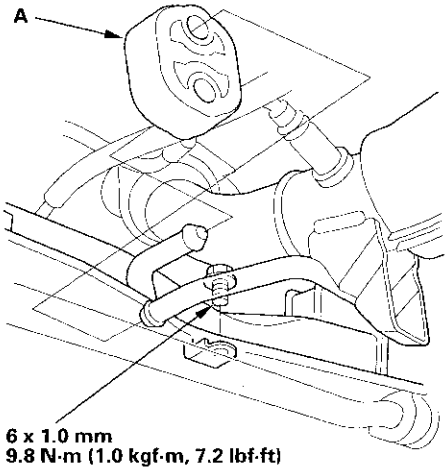

35. Secure the ATF filter bracket (A) and the IMA harness cover (B) with the bolts.

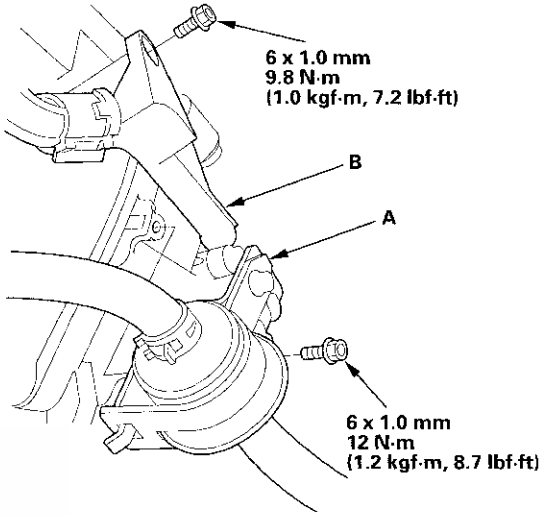

36. Remove the universal eyelet and spacers.

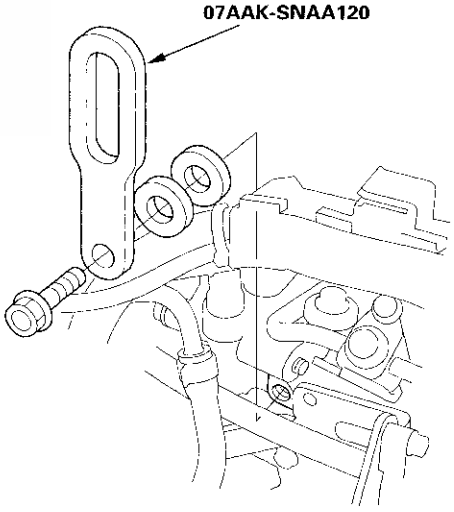

37. Install the harness cover (A) on its bracket (B), and secure it with the bolts.

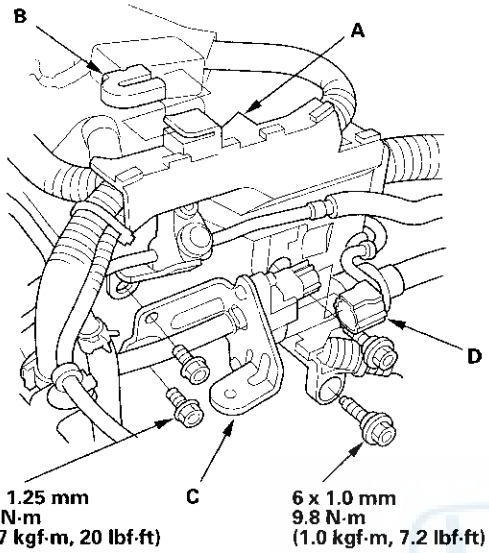

38. Secure the connector bracket (C) with the bolts, and connect the EVAP canister purge valve connector (D).

39. Attach the flywheel to the drive plate with six bolts. Rotate the crankshaft pulley to tighten the bolts to 1/2 of the specified torque, then to the final torque, in a crisscross pattern. After tightening the last bolt, check that the crankshaft rotates freely.

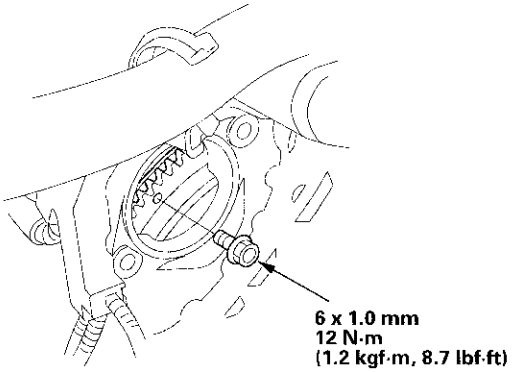

40. '06 model: Connect the transmission range switch connector (A), and install the harness clamp (B) on its bracket (C).

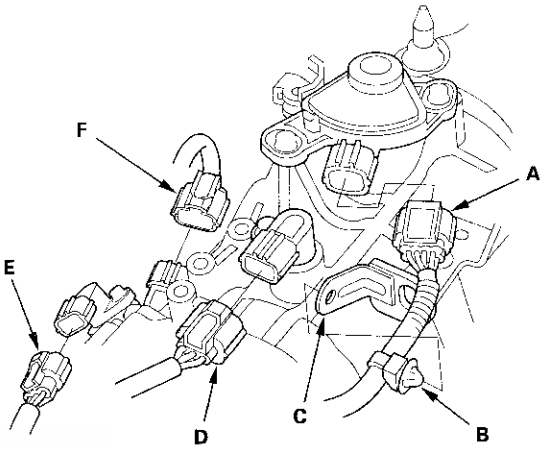

41. '06 model: Connect the CVT output shaft (driven pulley) speed sensor connector (D), the CVT speed sensor connector (E), and the CVT speed sensor (secondary) connector (F).

42. '07-09 models: Connect the transmission range switch connector (A), and install the harness clamp (B) on its bracket (C).

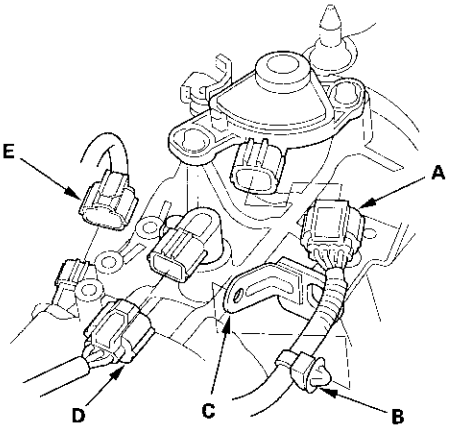

43. '07-09 models: Connect the CVT output shaft (driven pulley) speed sensor connector (D) and the CVT speed sensor connector (E).

(cont'd)

Transmission Installation (cont'd)

44. Install the harness clamps on the clamp bracket.

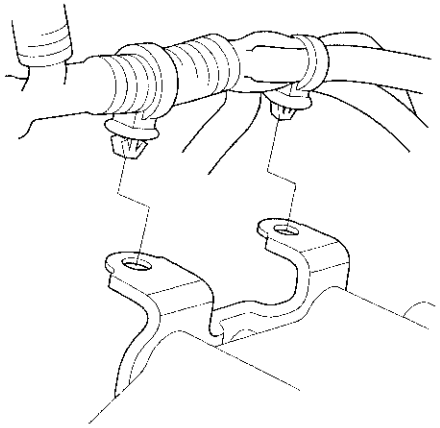

45. Apply molybdenum grease to the hole in the shift cable end collar (A). Attach the shift cable end to the selector control lever (B). Insert the control pin (C) through the selector control lever hole (D), through the shift cable end hole, and into the selector control lever slotted hole (E) in the direction shown. Push the control pin until its flange (F) contacts the selector control lever surface.

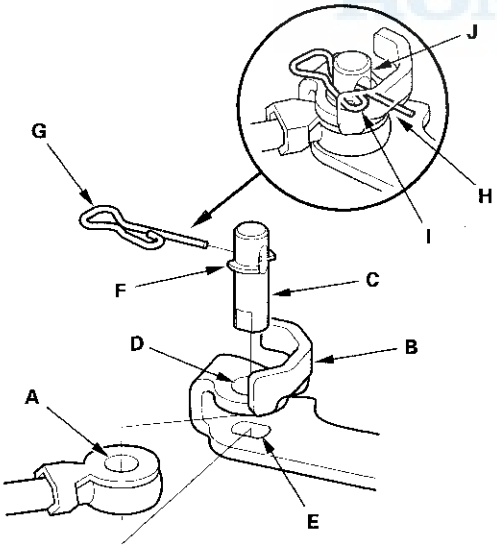

46. Insert the snap pin (G) in the direction shown through the control pin hole and out the opening (H) of the selector control lever so that the hooked end (I) of the snap pin snaps into the countersunk hole (J) of the control pin.

47. Secure the shift cable holder (A) on the transmission with the bolts.

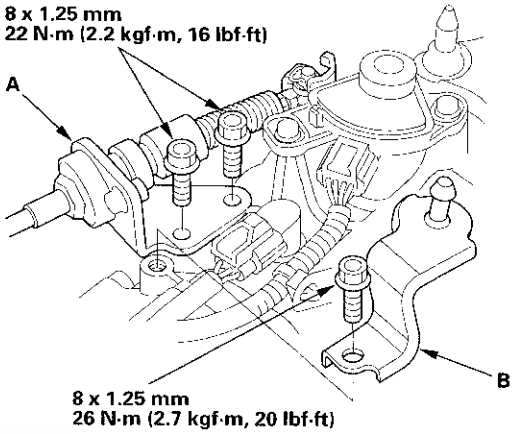

48. Install the air cleaner housing mounting bracket (B).

49. Connect the ATF cooler hoses (A) to the ATF cooler lines (B), and secure the hoses with the clips (C) (see page 14-199).

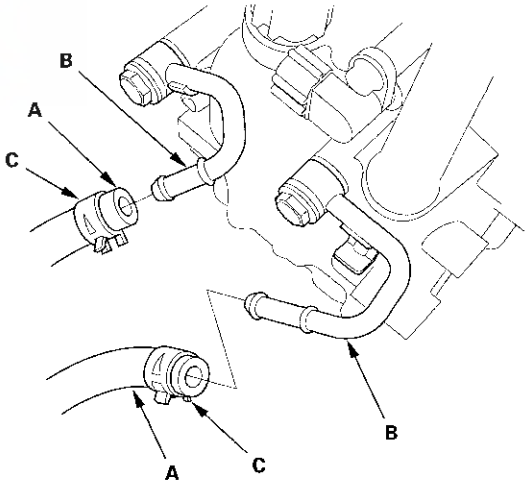

50. Connect the CVT input shaft (drive pulley) speed sensor connector (A) and the solenoid harness connector (B).

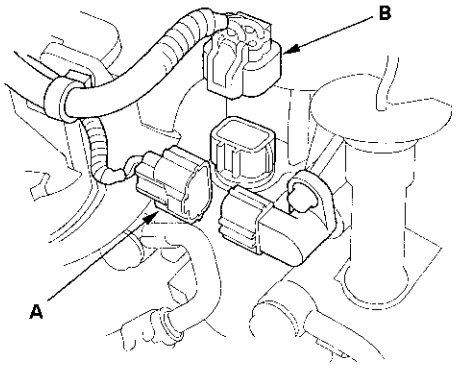

51. Install the starter (A).

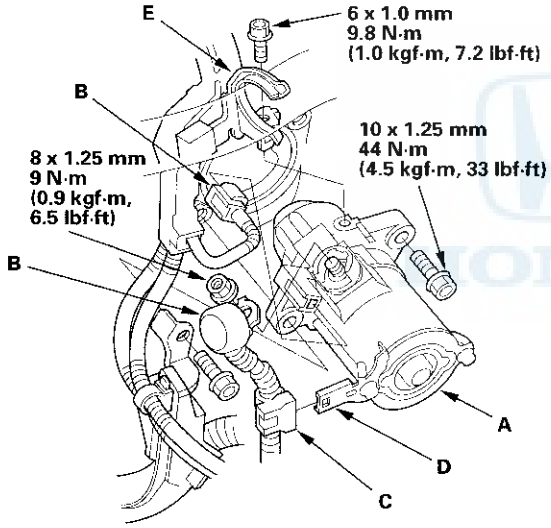

52. Connect the starter cables (B), and install the harness clamp (C) on its bracket (D).

53. Secure the upper radiator hose clamp (E) on the starter with the bolt.

54. Secure the IMA harness cover bracket (A) with the bolt, and install the harness clamp (B) on its bracket (C).

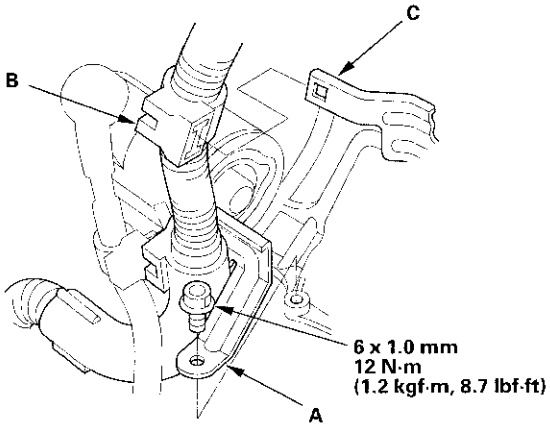

55. Refill the transmission with CVTF (see step 5 on page 14-177).

56. Install the battery base and the resonator.

57. Install the PCM bracket and the PCM, then connect the PCM connectors.

58. Install the under-hood fuse/relay box bracket, the reservoir bracket, and the reservoir.

59. Install the air cleaner assembly (see page 11-370) and the intake air duct.

60. Install the front grille cover (see page 20-139).

61. Install the under-cowl panel and the cowl cover (see page 20-140).

62. Install the battery tray and the battery, then secure the battery with its hold-down bracket.

63. Do the battery installation procedure (see page 22-63).

64. Install the front wheels.

65. Set the parking brake. Start the engine, and shift the transmission through all positions three times.

(cont'd)

Transmission Installation (cont'd)

66. Check the shift lever operation, the A/T gear position indicator operation, and the shift cable adjustment.

67. Place a floor jack under the lower arm, and raise the front suspension to load it with the vehicle's weight. Do not place the jack against the ball joint pin of the knuckle. Tighten the bolts and nuts to 59 N·m (6.0 kgf·m, 43 lbf·ft) in the following order; the nut on the front, the nut on the rear, then the bolt.

68. Check and adjust the front wheel alignment (see page 18-6).

69. Install the splash shield (A) (see page 20-148) and the front undercover (B) (see page 20-150).

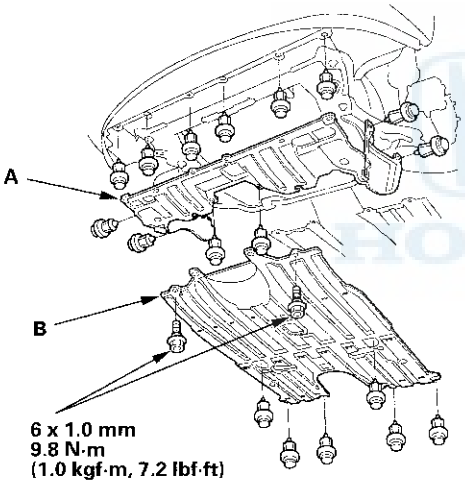

70. Start the engine with the shift lever in P or N, and warm it up to normal operating temperature (the radiator fan comes on). Turn the engine off, and check the CVT fluid level (see page 14-175).

71. Do the start clutch pressure control calibration procedures (see page 14-172).

72. Road-test the vehicle (see page 14-159).

73. If the IMA battery level gauge (BAT) displays no segments, start the engine with the shift lever in P or N, and hold it between 3,500 and 4,000 rpm without load until the BAT display at least three segments.

ATF Cooler Cleaning

Special Tools Required
- ATF cooler cleaner GHTTTCF6H
- Magnetic nonbypass spin-on filter GTHGNBP2

These special tools are available through the Honda Tool and Equipment Program 888-424-6857.

Before installing an overhauled or remanufactured continuously variable transmission, you must thoroughly clean the ATF cooler to prevent system contamination. Failure to do so could cause a repeat continuously variable transmission failure.

The cleaning procedure involves heated CVTF delivered under high pressure (100 psi). Check the security of all hoses and connections. Always wear safety glasses or a face shield, along with gloves and protective clothing. If you get CVTF in your eyes or on your skin, rinse with water immediately.

⚠ WARNING

- Improper use of the ATF cooler cleaner can result in burns and other serious injuries.
- Always wear eye protection and protective clothing, and follow this procedure.

1. Check the fluid in the cooler cleaner tank. (The fluid level should be 4.5 inches from the top of the filler neck.) Adjust the level if needed; do not overfill. Use only Honda CVTF; do not use any additives.

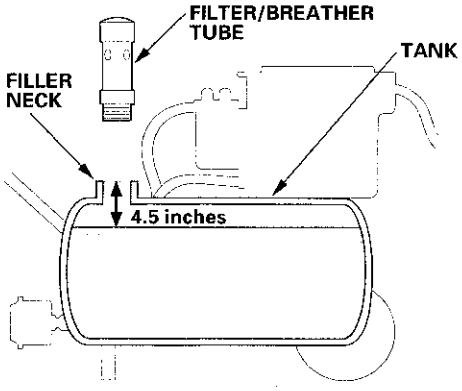

2. Plug the cooler cleaner into a 110 V grounded electrical outlet.

NOTICE

Make sure the outlet has no other appliances (light fixtures, drop lights, extension cords) plugged into it. Also, never plug the cooler cleaner into an extension cord or drop light; you could damage the unit.

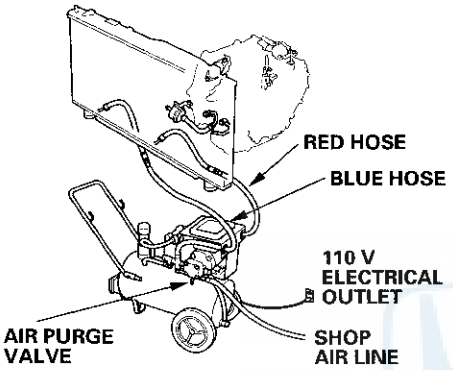

3. Flip the HEAT toggle switch to ON; the green indicator above the toggle switch comes on. Wait 1 hour for the cooler cleaner to reach its operating temperature. (The cooler cleaner is ready to use when the temperature gauge reads 140 °F to 150 °F.)

   NOTE: If the red indicator above the HEAT toggle switch comes on, the fluid level in the tank is too low for the tank heater to work (see step 1 of this procedure).

4. Select the appropriate pair of fittings, and attach them to the radiator, to the hoses, or to the banjo bolts for flow through the ATF cooler cleaner.

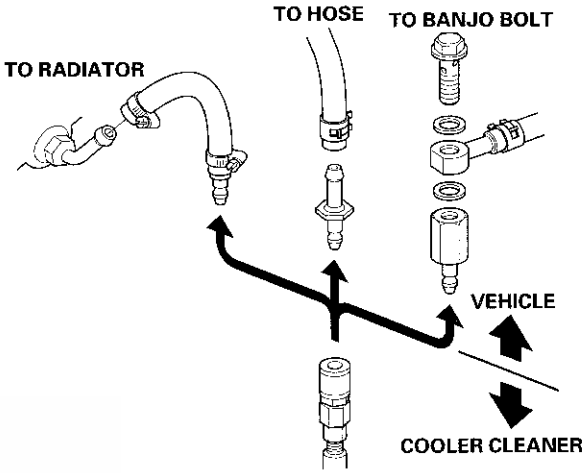

5. Connect the red hose to the cooler outlet line (the line that normally goes to the external filter on the transmission).

6. Connect the blue hose to the cooler inlet line.

7. Connect a shop air hose (regulated to 100 to 125 psi) to the air purge valve.

NOTICE

The quick-connect fitting has a one-way check valve to keep CVTF from entering your shop's air system. Do not remove or replace the fitting. Attach the coupler provided with the cooler cleaner to your shop air line if your coupler is not compatible.

(cont'd)

ATF Cooler Cleaning (cont'd)

8. Flip the MOTOR toggle switch to ON; the green indicator above the toggle switch comes on. Let the pump run for 5 minutes. While the pump is running, open and close the air purge valve periodically to cause agitation and improve the cleaning process. Always open the valve slowly. At the end of the 5-minute cleaning period, leave the air purge valve open.

   NOTE: While the pump is running with the air purge valve open, it is normal to see vapor coming from the filler/breather tube vents.

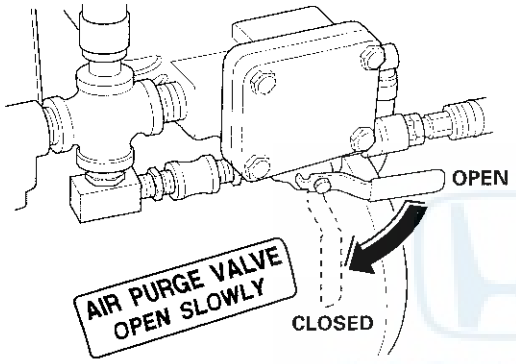

9. With the air purge valve open, flip the MOTOR toggle switch to OFF; the green indicator goes off. Leave the air purge valve open for at least 15 seconds to purge the lines and hoses of residual CVTF, then close the valve.

10. Disconnect the red and blue hoses from the ATF cooler. Now connect the red hose to the cooler inlet line.

11. Now connect the blue hose to the cooler outlet line.

12. Flip the MOTOR toggle switch to ON, and let the pump run for 5 minutes. While the pump is running, open and close the air purge valve periodically. Always open the valve slowly. At the end of the 5-minute cleaning period, leave the air purge valve open.

    NOTE: While the pump is running with the air purge valve open, it is normal to see vapor coming from the filler/breather tube vents.

13. With the air purge valve open, flip the MOTOR toggle switch to OFF. Leave the air purge valve open for at least 15 seconds to purge the lines and hoses of residual CVTF, then close the valve.

14. Disconnect the red and blue hoses from the ATF cooler lines.

15. Connect the red and blue hoses to each other.

16. Disconnect the shop air from the air purge valve. Disconnect and stow the coupler if used.

17. Disconnect and stow the fittings from the ATF cooler inlet and outlet lines.

18. Unplug the cooler cleaner from the 110 V outlet.

Tool Maintenance

Follow these instructions to keep the ATF cooler cleaner working properly:

- Replace the two magnetic nonbypass spin-on filters after every 20 hours of use, based on the hour-meter, or when you notice a restriction in the flow.
- Check the level and condition of the fluid in the tank before each use.
- Replace the CVTF in the tank when it looks dark or dirty.

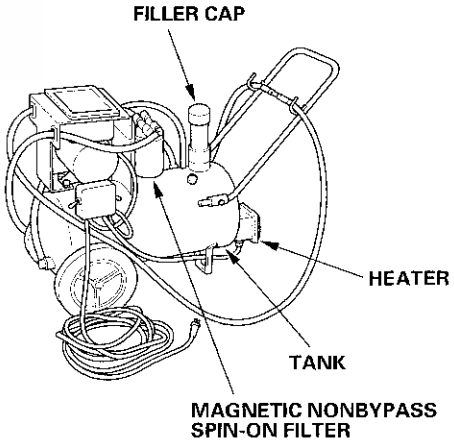

ATF Cooler Hose Replacement

Exploded View

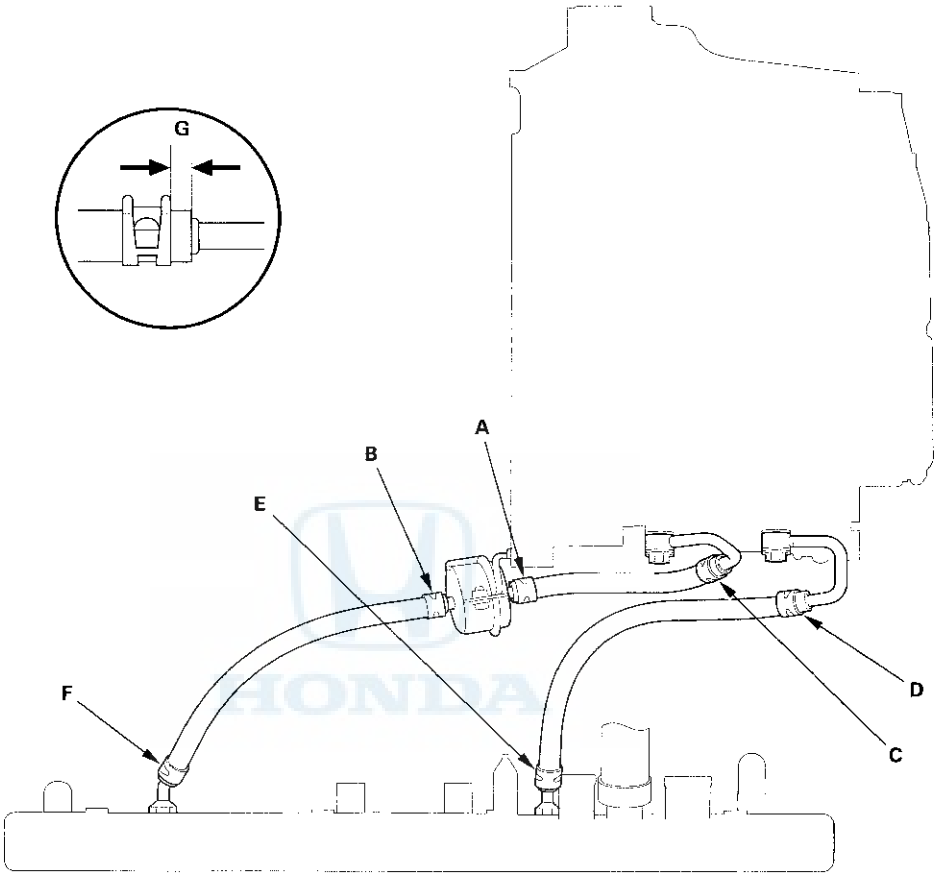

NOTE: When installing the hose clamps, make sure not to interfere to the surrounding parts.

1. Install the ATF cooler hoses over the ATF cooler lines with the clips at appropriate points in reference to the following list.

Point	Distance from Hose End to Clip (G)	Hose End Contact Point
A	2—4 mm (0.08—0.16 in.)	White Paint Mark
B	2—4 mm (0.08—0.16 in.)	ATF Filter Housing from 5—7 mm (0.20—0.28 in.)
C	6—8 mm (0.24—0.31 in.)	Bulge
D		
E	2—4 mm (0.08—0.16 in.)	Bulge
F		

2. Refill the transmission with ATF to the proper level (see page 14-176).

ATF Filter Replacement

1. Disconnect the ATF cooler hoses from the ATF filter (A).

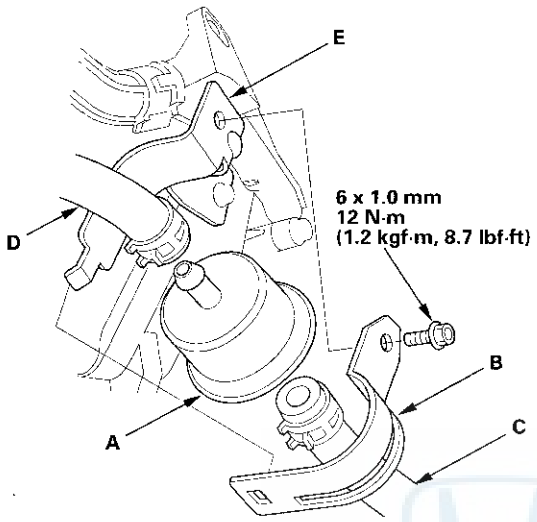

2. Remove the bolt securing the ATF filter holder (B), and remove the ATF filter.
3. Slide the ATF cooler hose (transmission side) (C) on a new ATF filter until the hose end contacts the white paint mark, and secure the hose with the clip at 2—4 mm (0.1—0.2 in.) from the hose end (see page 14-199).
4. Slide the ATF cooler hose (ATF cooler side) (D) on the ATF filter until the hose end is 5—7 mm (0.2—0.3 in.) away from the filter housing (see page 14-199).
5. Secure the ATF filter on its bracket (E) with the ATF filter holder and the bolt.

Shift Lever Removal

1. Remove the center console (see page 20-79).
2. Move the shift lever to R.
3. Pry the socket holder lock (A) up and off, using a screwdriver. If the socket holder lock is worn, damaged, or cracked, replace the socket holder lock or shift cable.

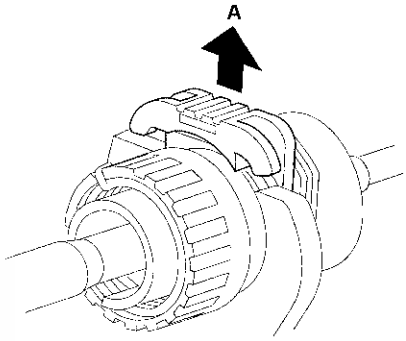

4. Remove the nut securing the shift cable end.

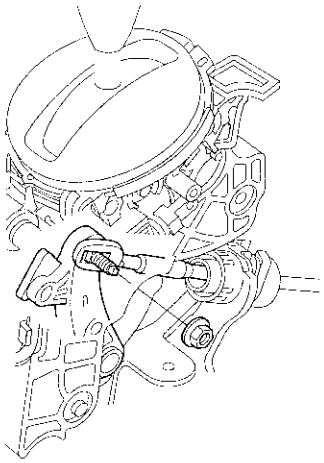

5. Rotate the socket holder retainer (A) counterclockwise, push it against the socket holder bracket (B), then slide the socket holder to remove the shift cable (C) from the bracket. Do not remove the shift cable by pulling the shift cable guide (D).

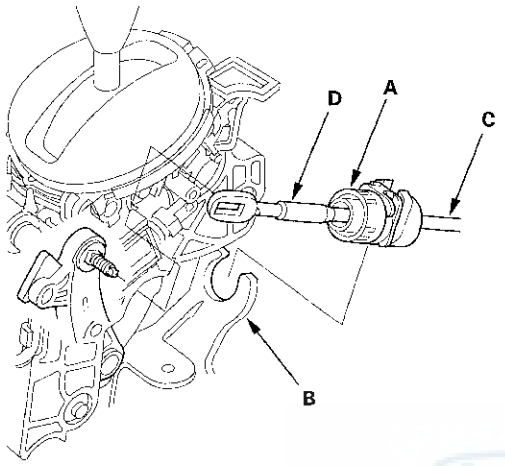

6. Disconnect the shift lock solenoid connector (A) and the park pin switch/A/T gear position indicator panel light connector (B).

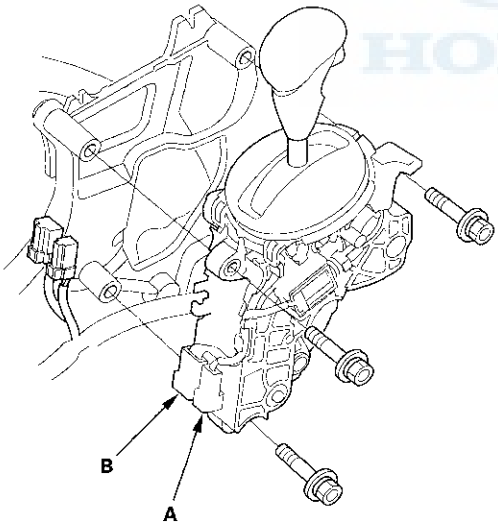

7. Remove the shift lever assembly.

Shift Lever Installation

1. Install the shift lever assembly.

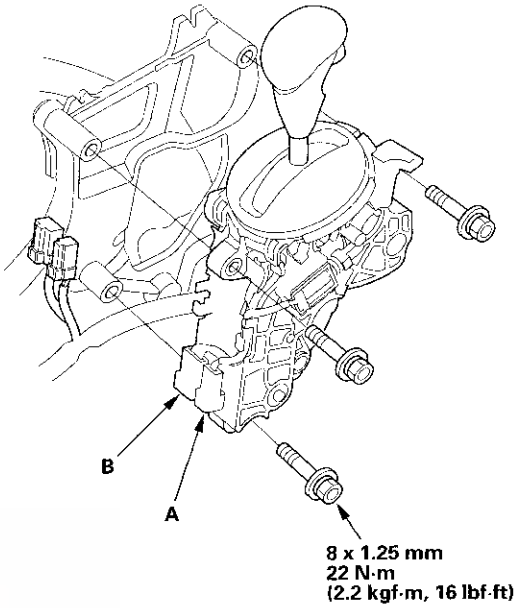

2. Connect the shift lock solenoid connector (A) and the park pin switch/A/T gear position indicator panel light connector (B).

3. Install the shift cable on the shift lever, and adjust the cable (see page 14-205).

Shift Lever Disassembly/Reassembly

NOTE: Make sure not to get any silicone grease on the terminal part of the connectors and switches, especially if you have silicone grease on your hands or gloves.

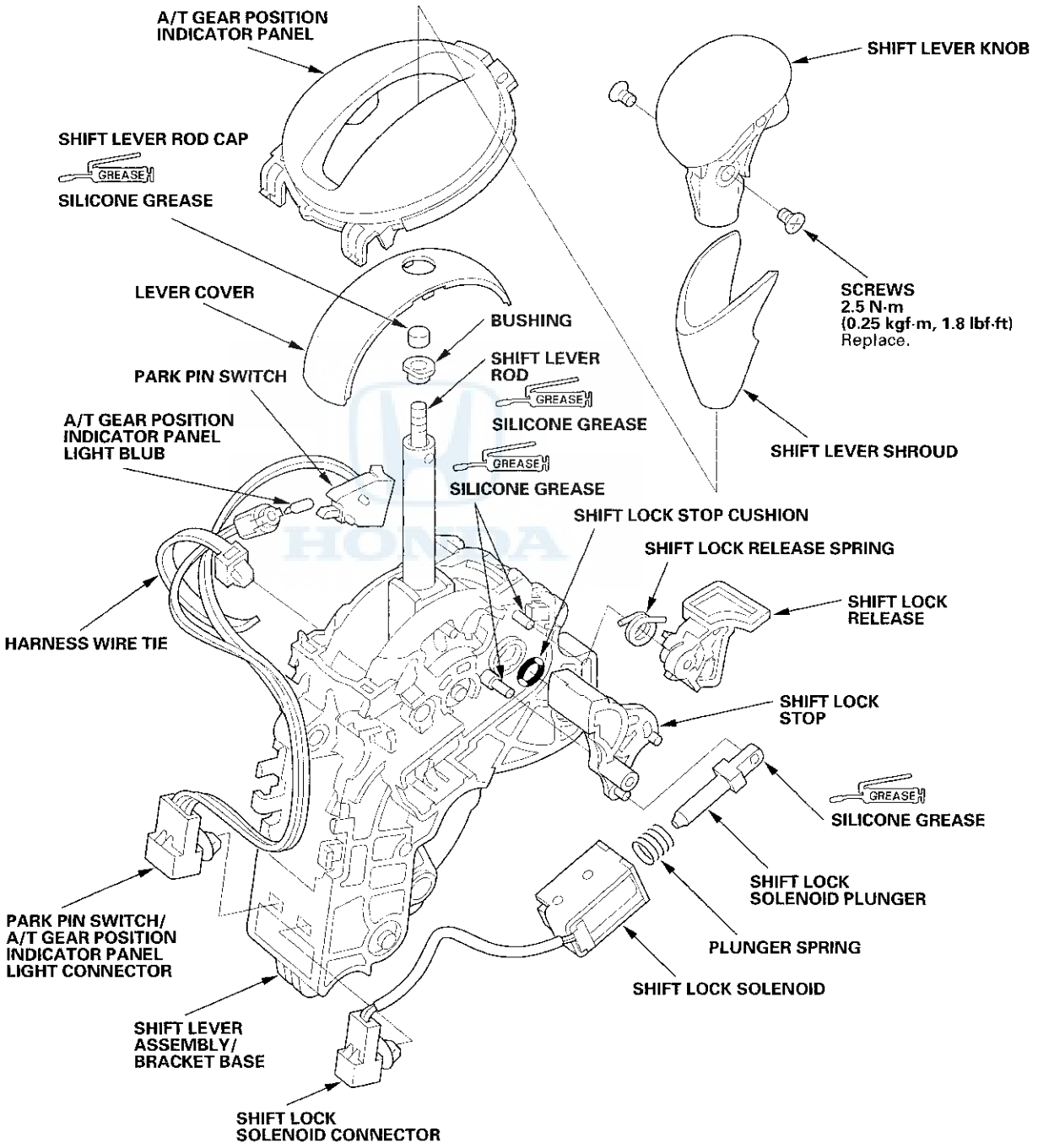

Shift Cable Replacement

1. Raise the vehicle on a lift, or apply the parking brake, block the rear wheels, and raise the front of the vehicle. Make sure it is securely supported.

2. Remove the center console (see page 20-79).

3. Move the shift lever to R.

4. Pry the socket holder lock (A) up and off, using a screwdriver.

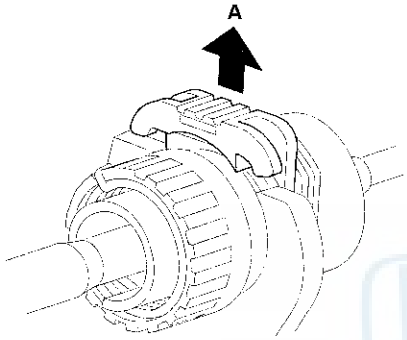

5. Remove the nut securing the shift cable end.

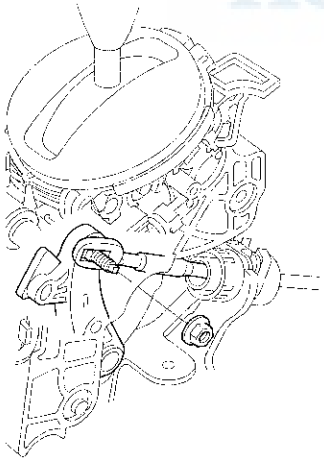

6. Rotate the socket holder retainer (A) counterclockwise, push it against the socket holder bracket (B), then slide the socket holder to remove the shift cable (C) from the bracket. Do not remove the shift cable by pulling the shift cable guide (D).

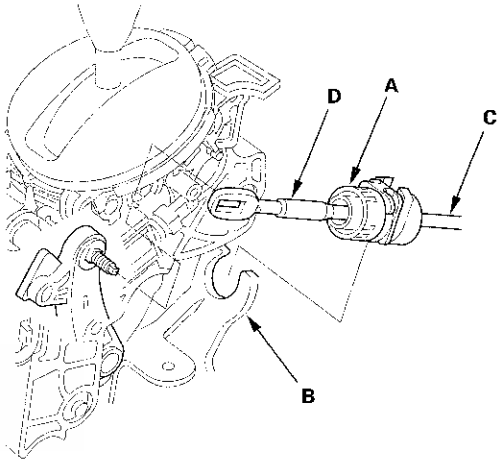

7. Remove the air cleaner housing mounting bracket (A).

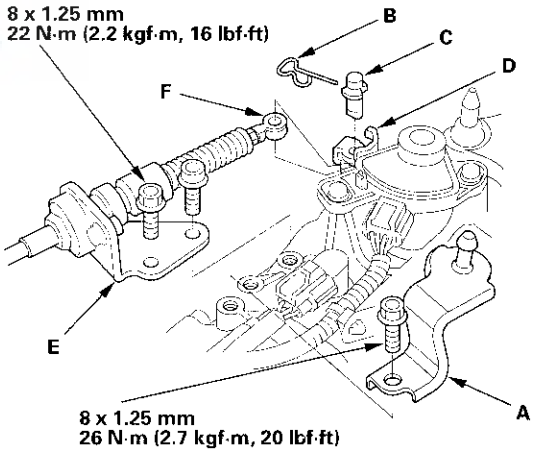

8. Remove the snap pin (B) and the control pin (C) from the control lever (D).

9. Remove the bolts securing the shift cable holder (E), then separate the shift cable (F) from the control lever. Do not bend the shift cable excessively.

(cont'd)

Shift Cable Replacement (cont'd)

10. Remove the shift cable heat shield.

11. Remove the bolts securing shift cable bracket A.

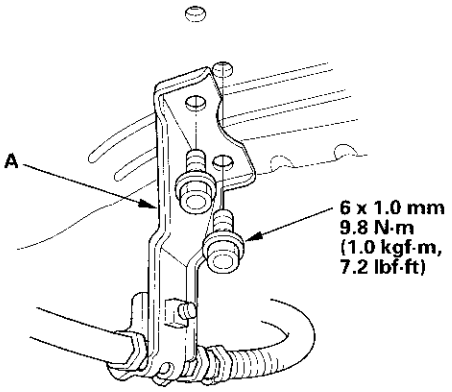

12. Remove the nuts securing shift cable bracket B and the grommet (C).

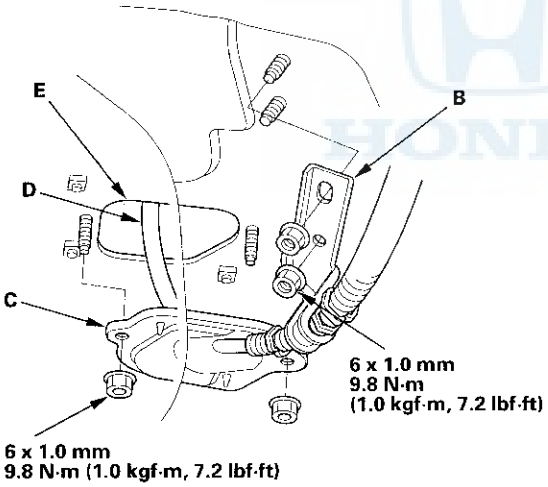

13. Remove the shift cable grommet, and pull out the shift cable (D).

14. Insert a new shift cable through the grommet hole (E), and install the grommet in its hole. Do not bend the shift cable excessively.

15. Secure shift cable bracket B and the grommet with the nuts.

16. Secure shift cable bracket A with the bolts.

17. Make sure that the transmission is in the R position at the selector control shaft.

18. Apply molybdenum grease to the hole in the shift cable end collar (A). Attach the shift cable end to the selector control lever (B). Insert the control pin (C) through the selector control lever hole (D), through the shift cable end hole, and into the selector control lever slotted hole (E) in the direction shown. Push the control pin until its flange (F) contacts the selector control lever surface.

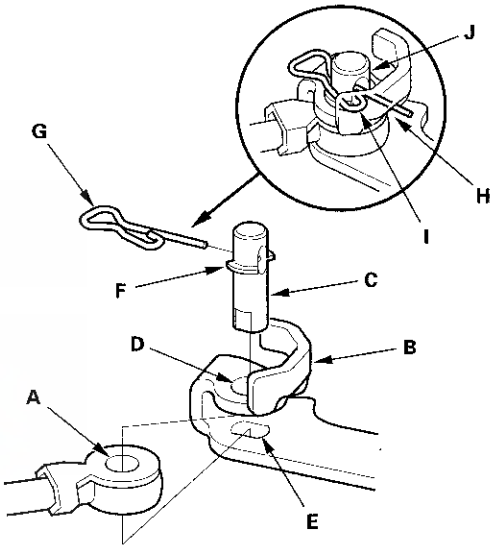

19. Insert the snap pin (G) in the direction shown through the control pin hole and out the opening (H) of the selector control lever so that the hooked end (I) of the snap pin snaps into the countersunk hole (J) of the control pin.

20. Secure the shift cable holder on the transmission with the bolts.

21. Install the air cleaner housing mounting bracket.

22. Install the shift cable on the shift lever, and adjust the cable (see page 14-205).

Shift Cable Adjustment

1. Remove the center console (see page 20-79).

2. Pry the socket holder lock (A) up and off, using a screwdriver. If the socket holder lock is worn, damaged, or cracked, replace the socket holder lock or shift cable.

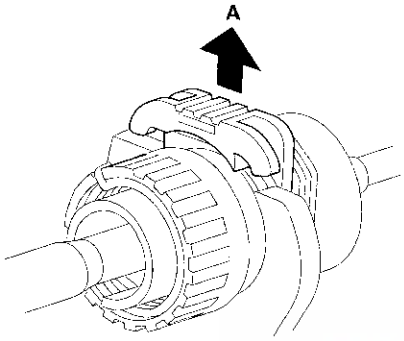

3. Remove the nut securing the shift cable end.

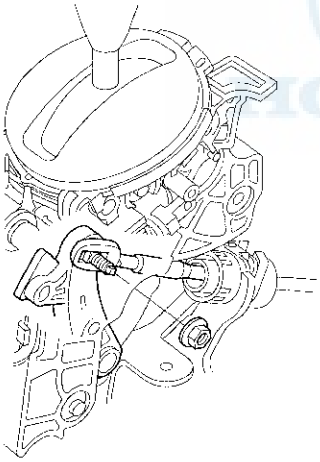

4. Rotate the socket holder retainer (A) counterclockwise, push it against the socket holder bracket (B), then slide the socket holder to remove the shift cable (C) from the bracket. Do not remove the shift cable by pulling the shift cable guide (D).

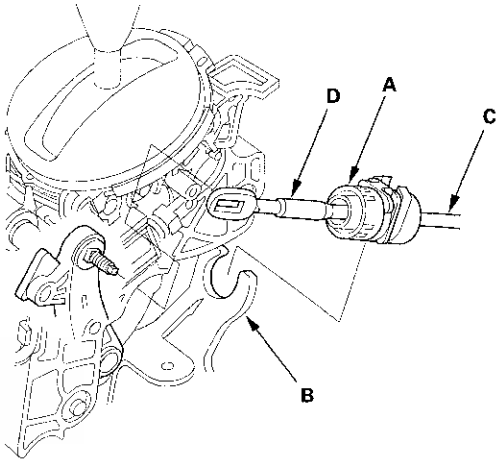

5. While holding the socket holder (A), rotate the socket holder retainer (B) fully counterclockwise, and press in the socket holder lock (C) between the holder and the retainer.

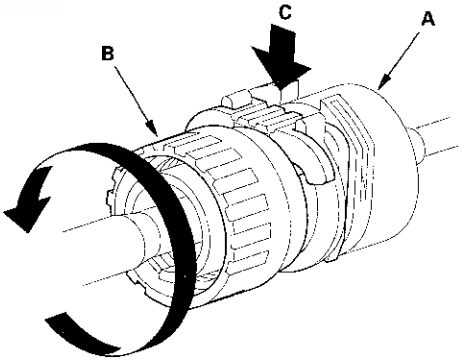

(cont'd)

Shift Cable Adjustment (cont'd)

6. Align the socket holder (A) with the slot (B) in the socket holder bracket (C), then slide the holder into the bracket.

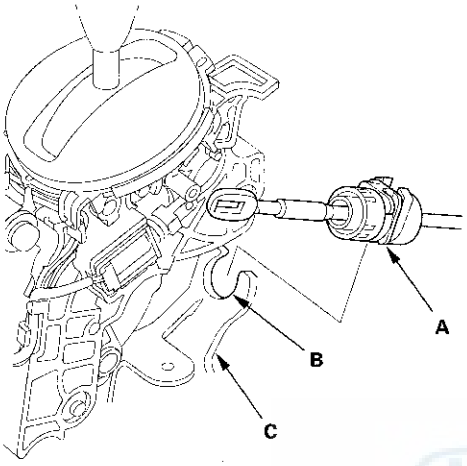

7. Rotate the socket holder retainer (A) clockwise, and push the socket holder lock (B). Rotate the holder retainer counterclockwise until the retainer stops at the stop (C) of the holder lock to secure the shift cable.

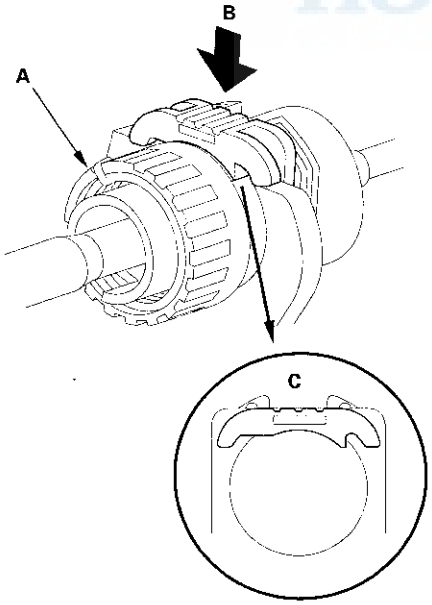

8. Push the shift cable (A) until it stops, then release it. Pull the shift cable back one step from the P position so that the shift position is in R. Do not hold the shift cable guide (B) to adjust the shift cable.

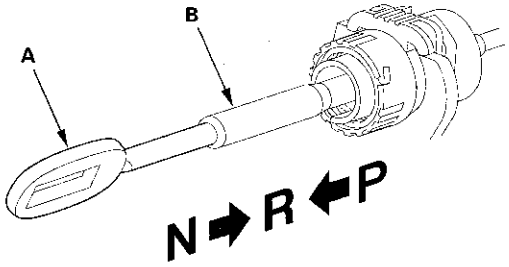

9. Turn the ignition switch to ON (II), and check that the R position indicator comes on.

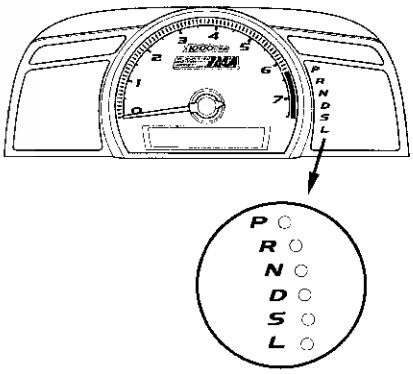

10. Turn the ignition switch to LOCK (0).

11. Place the shift lever in R, then insert a 6.0 mm (0.24 in.) pin (A) into the positioning hole (B) on the shift lever bracket, through the positioning hole (C) on the shift lever, and into the positioning hole on the bracket. Use only a 6.0 mm pin that is free of burrs.

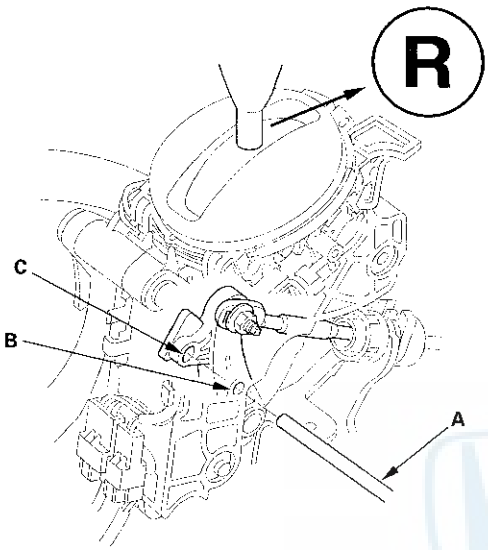

12. Check that the shift lever is secured in R.

13. Install the shift cable end (A) over the mounting stud (B) by aligning its square hole (C) with the square fitting (D) at the bottom of the stud. Do not install the shift cable by holding the shift cable guide (E).

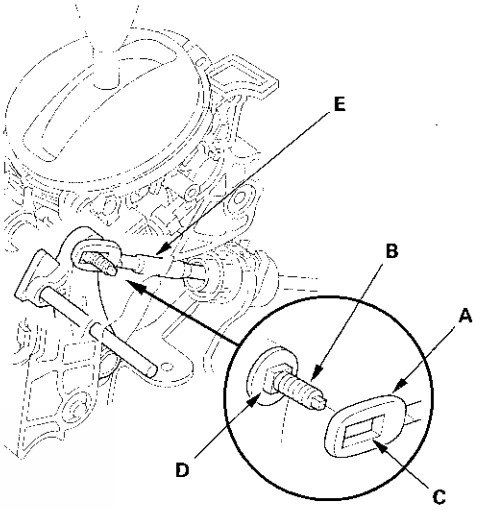

14. Check that the shift cable end (A) is properly installed on the mounting stud (B).

Properly Installed:

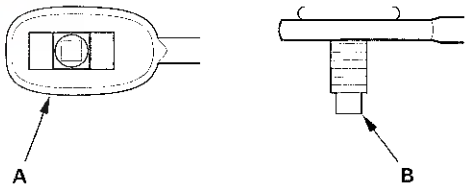

Improperly Installed:

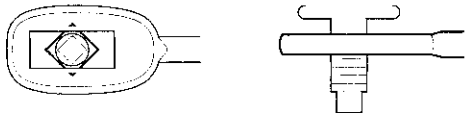

Shift cable end rides on the bottom of the mounting stud.

15. If improperly installed, align the square fitting with the square hole by rotating the mounting stud.

(cont'd)

Shift Cable Adjustment (cont'd)

16. Install and tighten the nut.

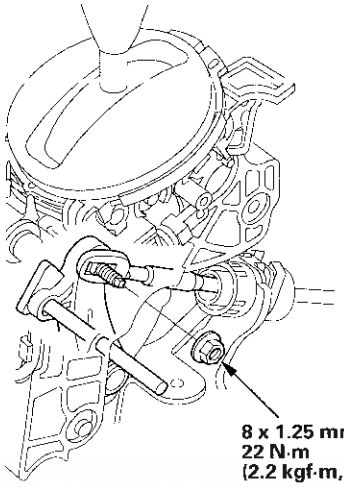

17. Remove the 6.0 mm (0.24 in.) pin that was installed to hold the shift lever.

18. Turn the ignition switch to ON (II). Move the shift lever to each position, and check that the A/T gear position indicator follows the transmission range switch.

19. Shift the shift lever to P, and check that the shift lock works properly. Push the shift lock release, and check that the shift lever releases.

20. Install the center console (see page 20-79).

A/T Gear Position Indicator

Component Location Index

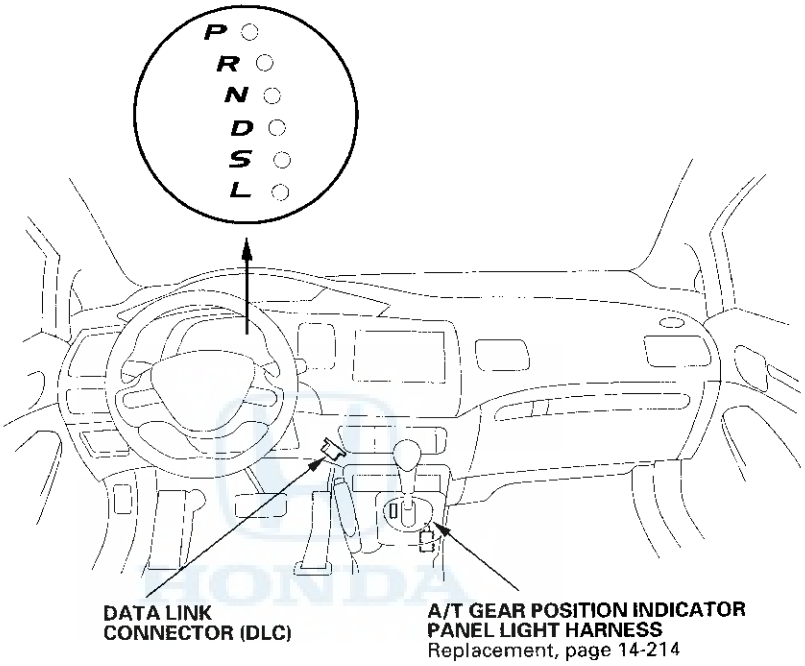

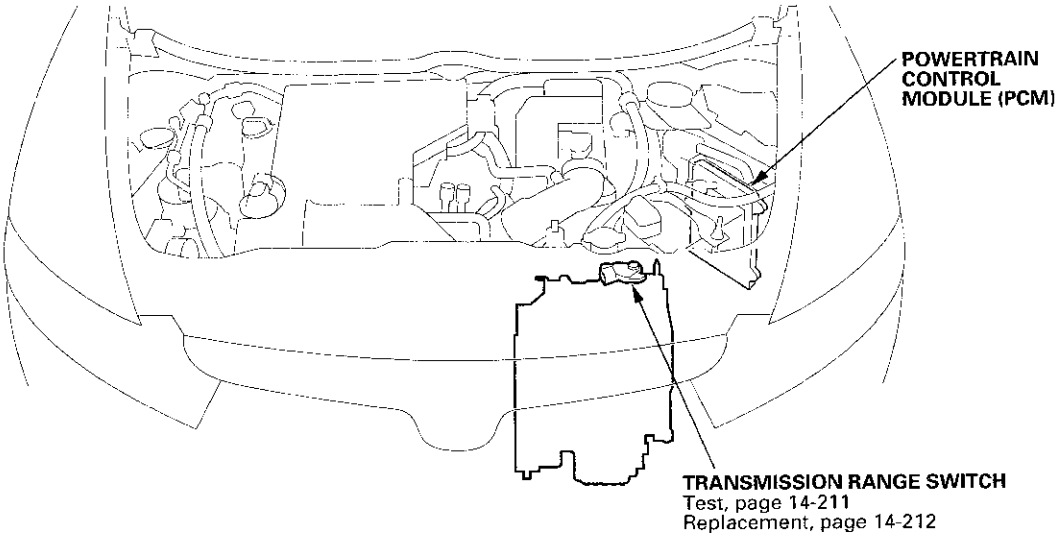

A/T Gear Position Indicator

Circuit Diagram

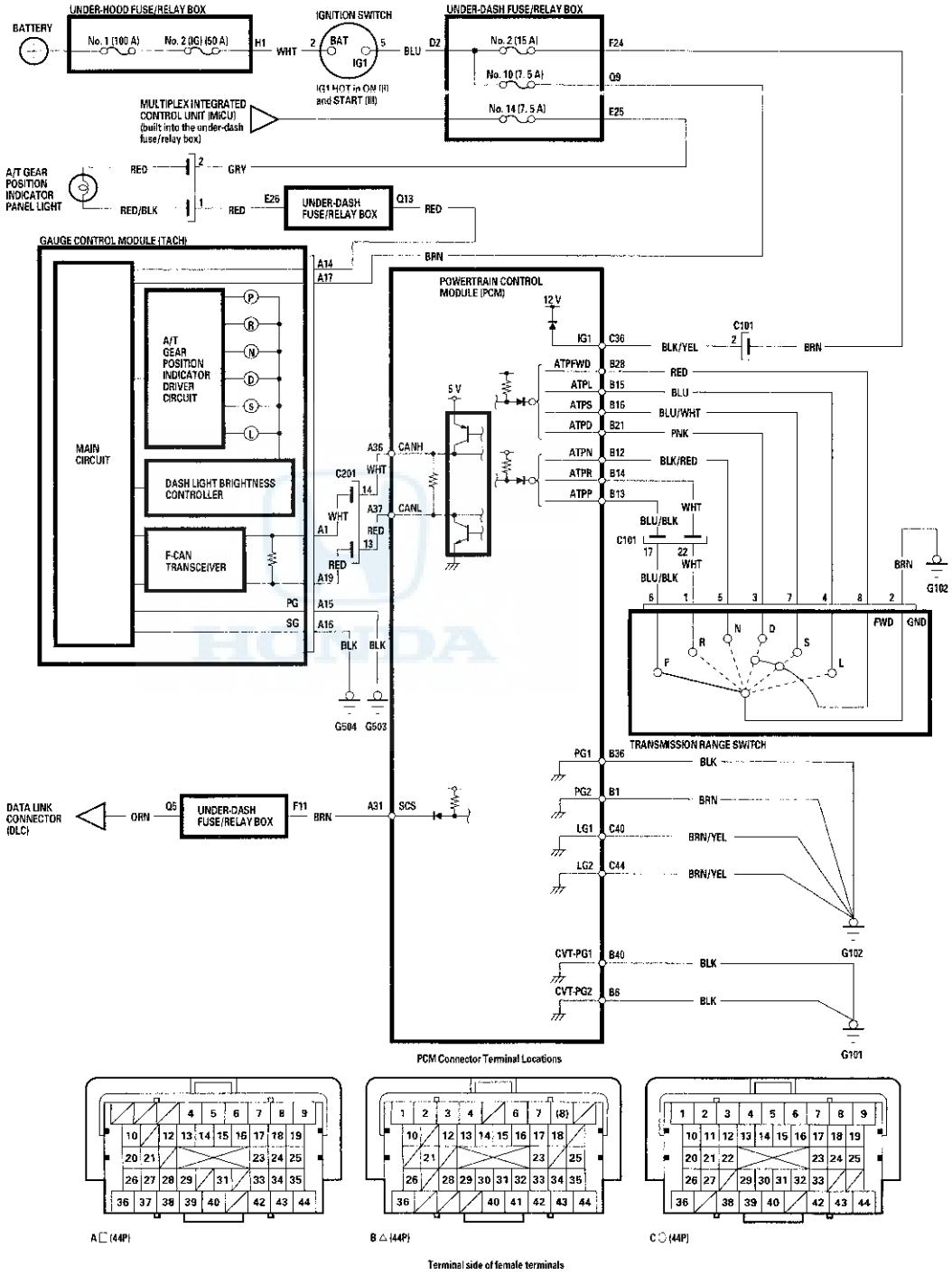

Transmission Range Switch Test

1. Remove the air cleaner assembly (see page 11-370) and the intake air duct.

2. Disconnect the transmission range switch connector.

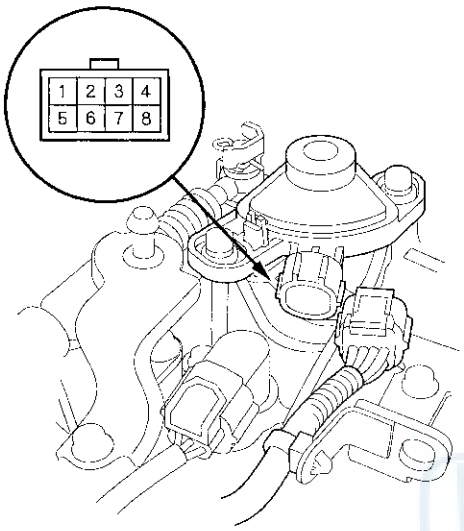

3. Check for continuity between terminals at the switch connector. There should be continuity between the terminals in the following table for each switch position.

Transmission Range Switch Connector

Position/Connector Terminal/Signal Connections								
	1	2	3	4	5	6	7	8
	R	GND	D	L	N	P	S	FWD
P		○				○		
R	○	○						
N		○			○			
D		○	○					○
S		○					○	○
L		○		○				

4. Transmission range switch test is completed if the test results are OK. If there is no continuity between any terminals, go to step 5.

5. Remove the transmission range switch, and check the end of the selector control shaft (A).

Selector Control Shaft Specifications
Width (B): 6.1—6.2 mm (0.240—0.244 in.)
End Gap (C): 1.8—2.0 mm (0.07—0.08 in.)

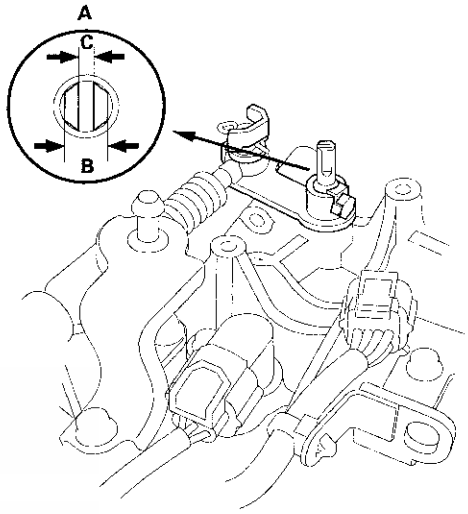

6. If the measurement of the selector control shaft end is within the standard, replace the transmission range switch (see page 14-212). If the measurement is out of the standard, repair the selector control shaft end, and recheck the transmission range switch continuity.

Transmission Range Switch Replacement

1. Move the shift lever to N.

2. Remove the air cleaner assembly (see page 11-370) and the intake air duct.

3. Disconnect the transmission range switch connector, and remove the control shaft cover (A).

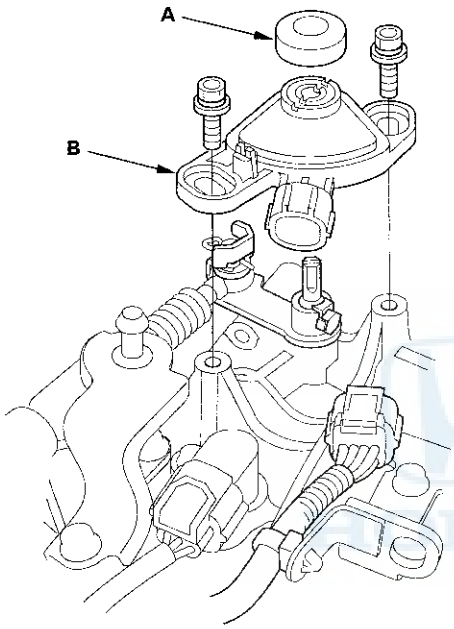

4. Remove the transmission range switch (B).

5. Make sure the selector control shaft is in the N position. If necessary, move the shift lever from P to N.

   NOTE: Do not use the selector control shaft to adjust the shift position. If the selector control shaft tips are squeezed together it will cause a faulty signal or position due to play between the selector control shaft and the transmission range switch.

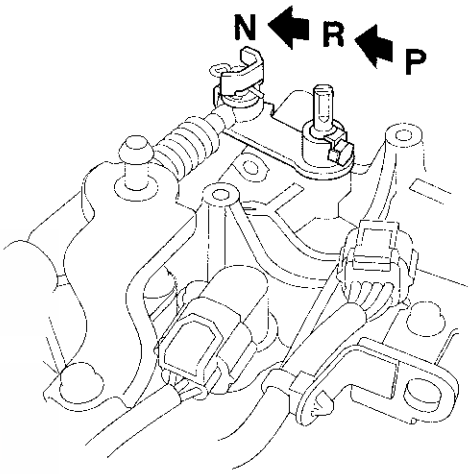

6. Set a new transmission range switch (A) to the N position, align the cutouts (B) on the rotary-frame with the neutral positioning cutouts (C) on the transmission range switch. Then put a 2.0 mm (0.08 in.) feeler gauge blade (D) in the cutouts to hold the transmission range switch in the N position.

   NOTE: Be sure to use a 2.0 mm (0.08 in.) feeler gauge blade or equivalent to hold the transmission range switch in the N position.

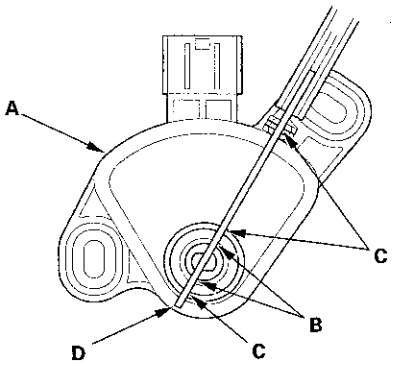

7. Install the transmission range switch (A) gently on the selector control shaft (B) while holding it in the N position with the 2.0 mm (0.08 in.) blade (C).

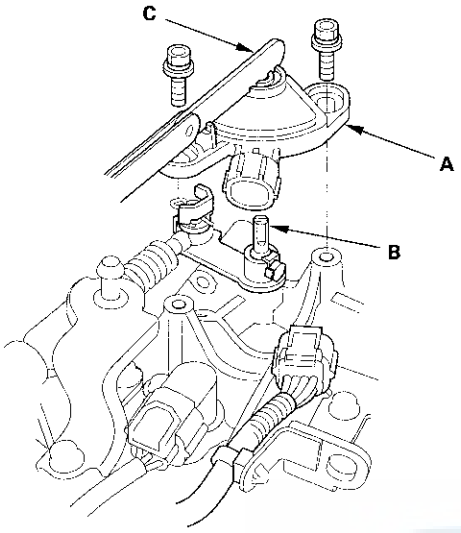

8. Tighten the bolts (A) on the transmission range switch while you continue to hold the N position. Do not move the transmission range switch when tightening the bolts. Remove the feeler gauge (B).

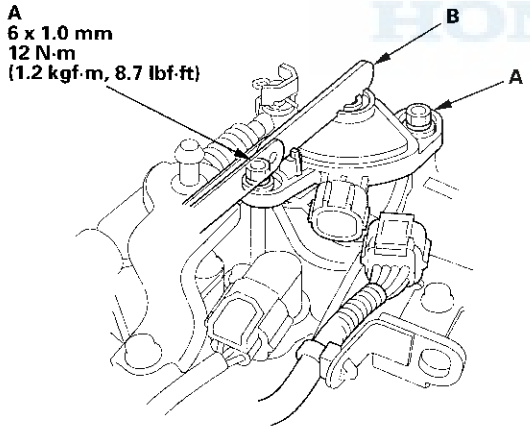

9. Check the connector for rust, dirt, or oil, clean or repair if necessary, then connect the transmission range switch connector securely.

10. Install the selector control shaft cover on the transmission range switch.

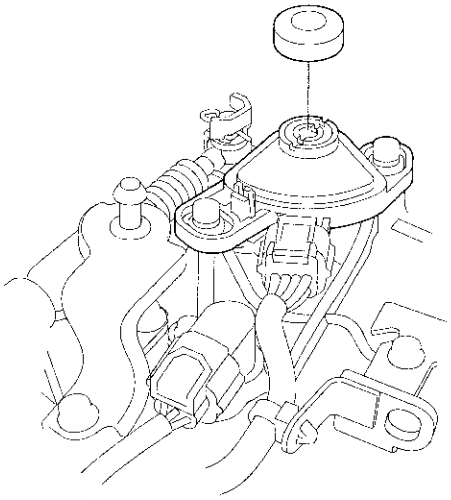

11. Turn the ignition switch to ON (II). Move the shift lever through all positions, and check the transmission range switch synchronization with the A/T gear position indicator.

12. Check that the engine will start with the shift lever in P and N, and will not start in any other shift lever position.

13. Check that the back-up lights come on when the shift lever is in R.

14. Raise the vehicle on a lift, or apply the parking brake, block the rear wheels, and raise the front of the vehicle. Make sure it is securely supported.

15. Allow the front wheels to rotate freely, then start the engine, and check the shift lever operation.

16. Install the air cleaner assembly (see page 11-370) and the intake air duct.

A/T Gear Position Indicator Panel Light Harness/Park Pin Switch Replacement

NOTE: The A/T gear position indicator light and the park pin switch are not available separately. Replace the A/T gear position indicator light and the park pin switch as a set.

1. Remove the shift lever assembly (see page 14-200).
2. Loosen the A/T gear position indicator panel (see page 14-202).
3. Remove the park pin switch (A) while pressing the park pin switch lock (B).

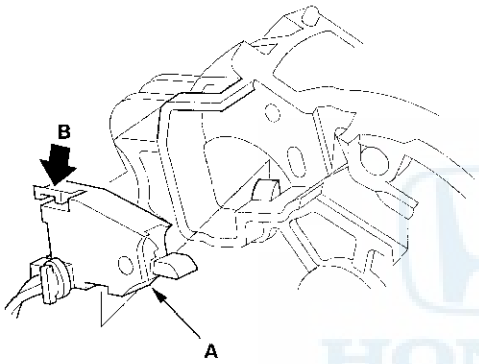

4. Remove the A/T gear position indicator panel light socket (A) from the indicator panel (B).

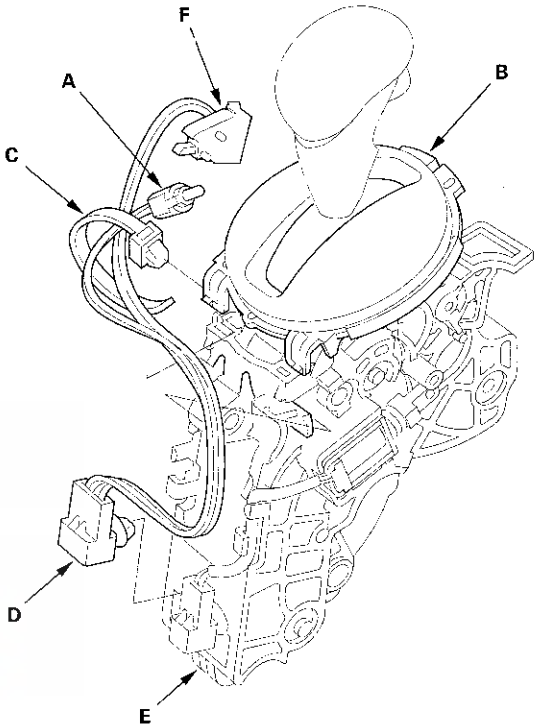

5. Remove the harness wire tie (C), and remove the park pin switch/A/T gear position indicator panel light harness connector (D) from the shift lever assembly/bracket base (E).
6. Install a new park pin switch (F) on the shift lever. Install the A/T gear position indicator panel light bulb in socket, and install it in the indicator panel.
7. Tie the harness together with a new harness wire tie, then install the harness wire tie on the shift lever bracket base.
8. Route the harnesses along the harness guides, and install the clip of the connector in the bracket base.
9. Install the A/T gear position indicator panel (see page 14-202).
10. Install the shift lever assembly (see page 14-201).

Component Location Index

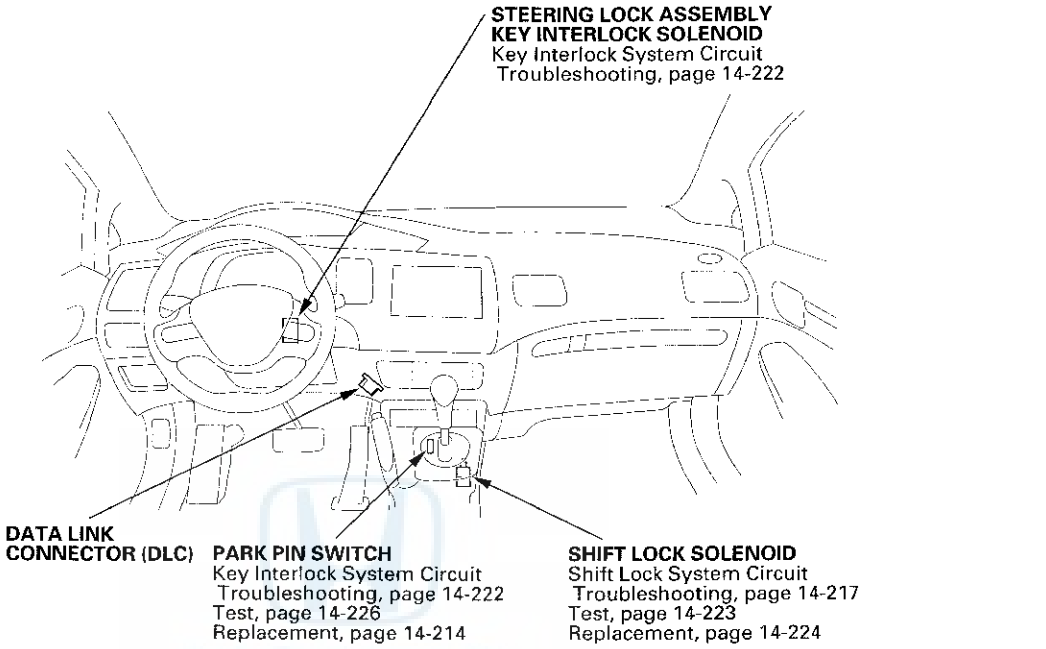

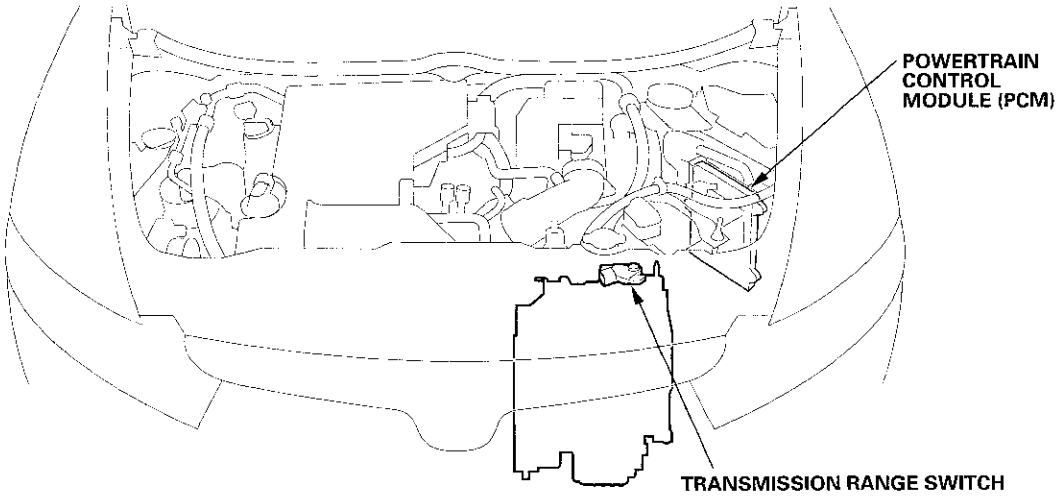

A/T Interlock System

Circuit Diagram

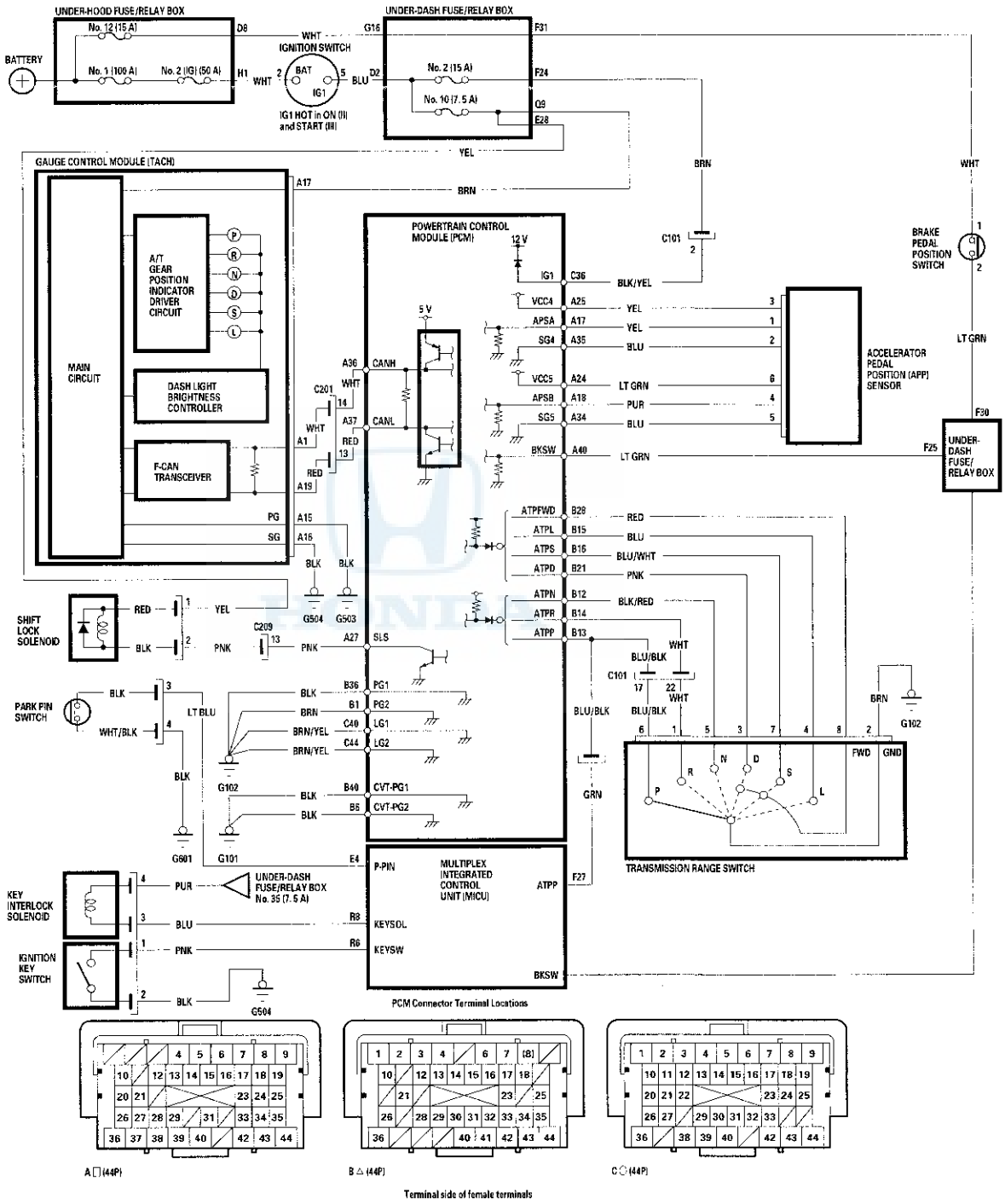

Shift Lock System Circuit Troubleshooting

1. Connect the HDS to the DLC (A) located under the driver's side of the dashboard.

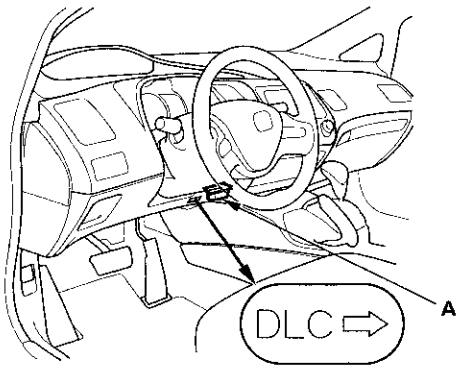

2. Turn the ignition switch to ON (II). Make sure the HDS communicates with the PCM. If it does not, go to the DLC circuit troubleshooting (see page 11-213).

3. Select the Shift Lock Solenoid Test in the Miscellaneous Test Menu, and check that the shift lock solenoid operates with the HDS.

   Does the shift lock solenoid work properly?

   YES—Go to step 16.

   NO—Go to step 4.

4. Turn the ignition switch to LOCK (0).

5. Remove the center console (see page 20-79).

6. Disconnect the shift lock solenoid connector.

7. Turn the ignition switch to ON (II).

8. Measure the voltage between shift lock solenoid connector terminal No. 1 and body ground.

SHIFT LOCK SOLENOID CONNECTOR

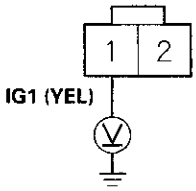

Wire side of female terminals

Is there battery voltage?

YES—Go to step 9.

NO—Check for a blown No. 10 (7.5 A) fuse in the under-dash fuse/relay box. If the fuse is OK, repair open in the wire between the shift lock solenoid connector and the under-dash fuse/relay box. ■

(cont'd)

Shift Lock System Circuit Troubleshooting (cont'd)

9. Shift the shift lever to P, and press the brake pedal. Do not press the accelerator.

10. Measure the voltage between shift lock solenoid connector terminals No. 1 and No. 2 while pressing the brake pedal.

SHIFT LOCK SOLENOID CONNECTOR

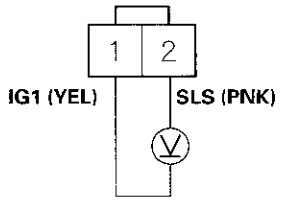

Wire side of female terminals

Is there battery voltage?

YES—Go to step 11.

NO—Go to step 12.

11. Release the brake pedal, and measure the voltage between shift lock solenoid connector terminals No. 1 and No. 2. The shift lever must be in P.

SHIFT LOCK SOLENOID CONNECTOR

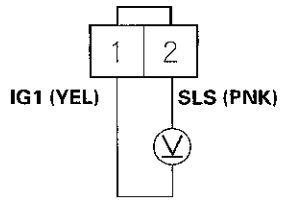

Wire side of female terminals

Is there battery voltage?

YES—Repair short to body ground in the wire between PCM connector terminal A27 and the shift lock solenoid. ■

NO—Check the shift lock mechanism. If the mechanism is OK, replace the shift lock solenoid (see page 14-224). ■

12. Turn the ignition switch to LOCK (0).

13. Jump the SCS line with the HDS.

14. Disconnect PCM connector A (44P).

15. Check for continuity between PCM connector terminal A27 and shift lock solenoid connector terminal No. 2.

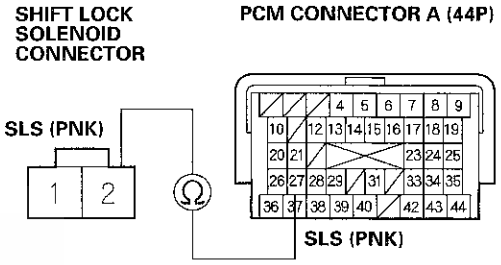

Is there continuity?

YES—Update the PCM if it does not have the latest software (see page 11-236), or substitute a known-good PCM (see page 11-7), and recheck. If the symptom goes away with a known-good PCM, replace the original PCM (see page 11-238). ■

NO—Repair open in the wire between PCM connector terminal A27 and the shift lock solenoid connector. ■

16. Press the brake pedal.

Are the brake lights ON?

YES—Go to step 17.

NO—Repair faulty brake light circuit.■

17. Turn the ignition switch to LOCK (0).

18. Jump the SCS line with the HDS.

19. Disconnect PCM connector A (44P).

20. Measure the voltage between PCM connector terminal A40 and body ground while pressing the brake pedal and when the brake pedal is released.

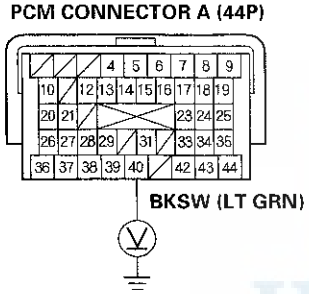

Terminal side of female terminals

Is there battery voltage while pressing the brake pedal, and about 0 V when the pedal is released?

YES—Go to step 21.

NO—Repair open in the wire between PCM connector terminal A40 and the brake position switch.■

21. Connect PCM connector A (44P).

22. Disconnect the transmission range switch connector.

23. Turn the ignition switch to ON (II).

24. Measure the voltage between transmission range switch connector terminals No. 2 and No. 6.

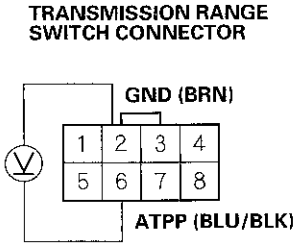

Wire side of female terminals

Is there about 5 V?

YES—Go to step 31.

NO—Go to step 25.

(cont'd)

Shift Lock System Circuit Troubleshooting (cont'd)

25. Turn the ignition switch to LOCK (0).

26. Jump the SCS line with the HDS.

27. Disconnect PCM connector B (44P).

28. Check for continuity between PCM connector terminal B13 and body ground.

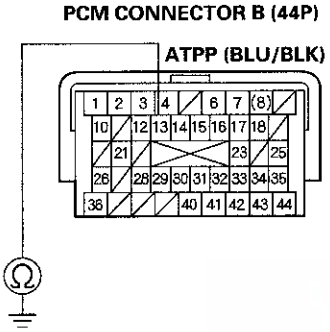

Is there continuity?

YES—Repair short to body ground in the wire between PCM connector terminal B13 and the transmission range switch. ■

NO—Go to step 29.

29. Check for continuity between PCM connector terminal B13 and transmission range switch connector terminal No. 6.

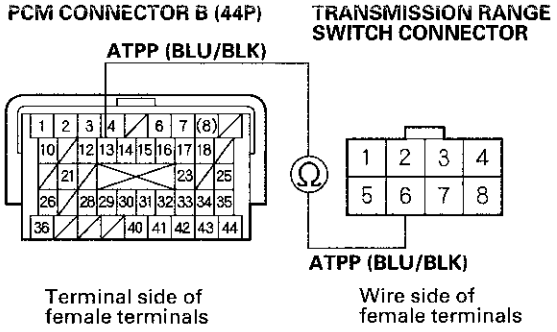

Is there continuity?

YES—Go to step 30.

NO—Repair open in the wire between PCM connector terminal B13 and the transmission range switch. ■

30. Check for continuity between transmission range switch connector terminal No. 2 and body ground.

TRANSMISSION RANGE SWITCH CONNECTOR

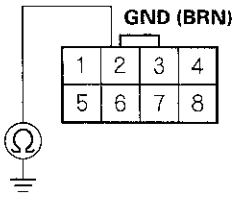

Wire side of female terminals

Is there continuity?

YES—Update the PCM if it does not have the latest software (see page 11-236), or substitute a known-good PCM (see page 11-7), and recheck. If the symptom goes away with a known-good PCM, replace the original PCM (see page 11-238).■

NO—Repair open in the wire between transmission range switch connector terminal No. 2 and body ground (G102), or repair poor body ground (G102).■

31. Test the transmission range switch (see page 14-211).

Is the transmission range switch OK?

YES—Go to step 32.

NO—Replace the transmission range switch (see page 14-212).■

32. Check the accelerator pedal position sensor in the Data List with the HDS. Do not press the accelerator.

Is the accelerator pedal position sensor opening 11 % or above, or the sensor voltage 1.60 V or above?

YES—Check the APP sensor (see page 11-277).■

NO—Update the PCM if it does not have the latest software (see page 11-236), or substitute a known-good PCM (see page 11-7), and recheck. If the symptom goes away with a known-good PCM, replace the original PCM (see page 11-238).■

Key Interlock System Circuit Troubleshooting

SRS components are located in this area. Review the SRS component locations (see page 24-11) and the precautions and procedures (see page 24-13) before doing repairs or service.

1. Turn the ignition switch to ACCESSORY (I). The shift lever must be in P.

2. Disconnect the steering lock assembly connector.

3. Check if the ignition switch can be turned to LOCK (0).

   Can the ignition switch be turned to LOCK (0)?

   YES—Go to step 4.

   NO—Replace the ignition key cylinder/steering lock assembly (see page 17-15).■

4. Turn the ignition switch to LOCK (0).

5. Move the shift lever out of P.

6. Check for continuity between steering lock assembly connector terminal No. 3 and body ground.

STEERING LOCK ASSEMBLY CONNECTOR

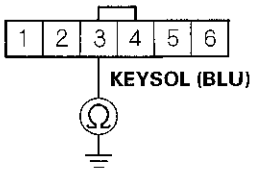

Wire side of female terminals

Is there continuity?

YES—Repair short to body ground in the wire between the key interlock solenoid and the MICU.■

NO—Go to step 7.

7. Remove the center console (see page 20-79).

8. Check for continuity between park pin switch/A/T gear position indicator panel light connector terminal No. 3 and body ground.

PARK PIN SWITCH/ A/T GEAR POSITION INDICATOR PANEL LIGHT CONNECTOR

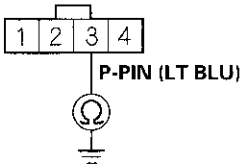

Wire side of female terminals

Is there continuity?

YES—Repair short to body ground in the wire between park pin switch/A/T gear position indicator panel light connector terminal No. 3 and the MICU.■

NO—Go to step 9.

9. Shift the shift lever to P.

10. Check for continuity between park pin switch/A/T gear position indicator panel light connector terminals No. 3 and No. 4. Do not push the shift lever button.

PARK PIN SWITCH/ A/T GEAR POSITION INDICATOR PANEL LIGHT CONNECTOR

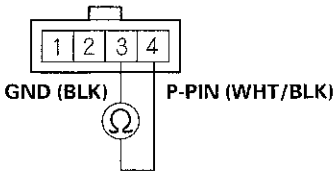

Terminal side of male terminals

Is there continuity?

YES—Replace the park pin switch (see page 14-214).■

NO—Go to step 11.

11. Disconnect under-dash fuse/relay box connector F (34P) (see page 22-60).

12. Turn the ignition switch to ON (II).

13. Measure the voltage between under-dash fuse/relay box connector F (34P) No. 27 terminal and body ground.

UNDER-DASH FUSE/RELAY BOX CONNECTOR F (34P)

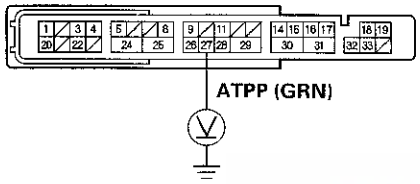

Wire side of female terminals

Is there about 0 V when the shift lever is in P, and is there voltage when the shift lever shifts out of P ?

YES—Substitute a known-good under-dash fuse/relay box, and recheck. ■

NO—Repair short to body ground in the wire between PCM connector terminal B13, the transmission range switch, and the under-dash fuse/relay box. ■

Shift Lock Solenoid Test

1. Connect the HDS to the DLC (A) located under the driver's side of the dashboard.

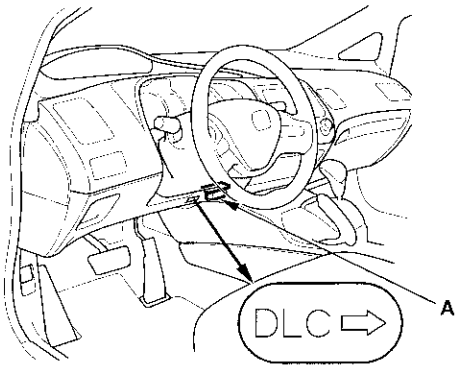

2. Turn the ignition switch to ON (II).

3. Make sure the HDS communicates with the PCM. If it does not, go to the DLC circuit troubleshooting (see page 11-213).

4. Select shift Lock Solenoid Test in the Miscellaneous Test Menu, and check that the shift lock solenoid operates with the HDS.

5. Make sure that the shift lever can be moved out of P when the Shift Lock Solenoid is ON. Move the shift lever back to P, and make sure it locks when the Shift Lock Solenoid is OFF.

6. Make sure that the shift lock releases when the shift lock release is pushed, and check that it locks when the shift lock release is released.

7. If shift lock solenoid does not work properly, go to the shift lock system troubleshooting (see page 14-217).

Shift Lock Solenoid Replacement

NOTE: Make sure not to get any silicone grease on the terminal part of the connectors and switches, especially if you have silicone grease on your hands or gloves.

1. Remove the shift lever assembly (see page 14-200).
2. Remove the shift lock solenoid connector.
3. Release the lock tab (A), then remove the shift lock solenoid (B).

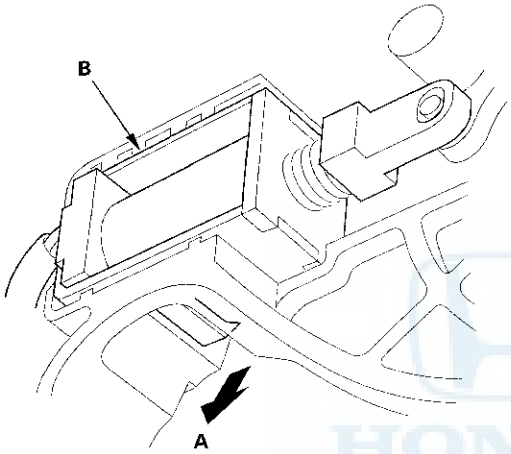

4. Replace the shift lock solenoid (A), the solenoid plunger (B), and the plunger spring (C) assembly.

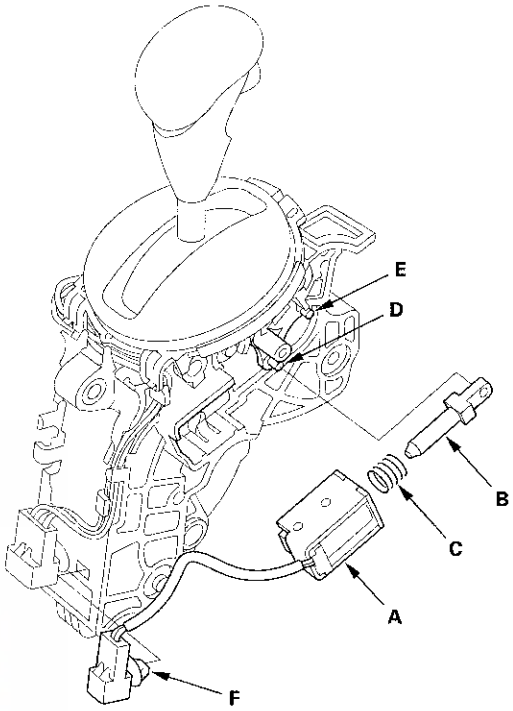

5. Apply silicone grease to the tip (D) of the shift lock stop (E), and the solenoid plunger.
6. Install the shift lock solenoid by aligning the joint of the shift lock solenoid plunger with the tip of the shift lock stop, then push the shift lock solenoid into the shift lever securely.
7. Route the shift lock solenoid harness in the guide, and install the clip (F) on the connector on the bracket base.
8. Install the shift lever assembly (see page 14-201).

Shift Lock Stop, Shift Lock Stop Cushion Replacement

NOTE: Make sure not to get any silicone grease on the terminal part of the connectors and switches, especially if you have silicone grease on your hands or gloves.

1. Remove the shift lever assembly (see page 14-200).

2. Release the lock tab (A), then remove the shift lock solenoid (B).

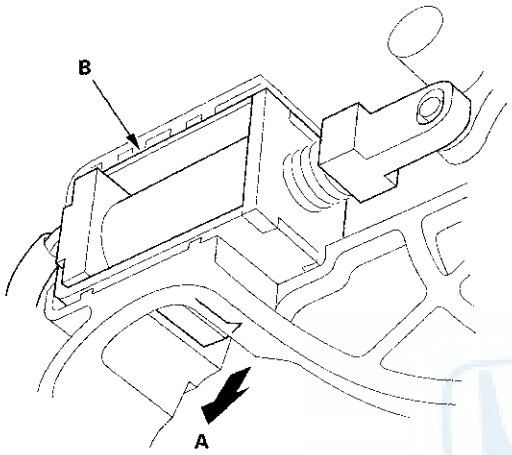

3. Remove the shift lock release (A) and the release spring (B).

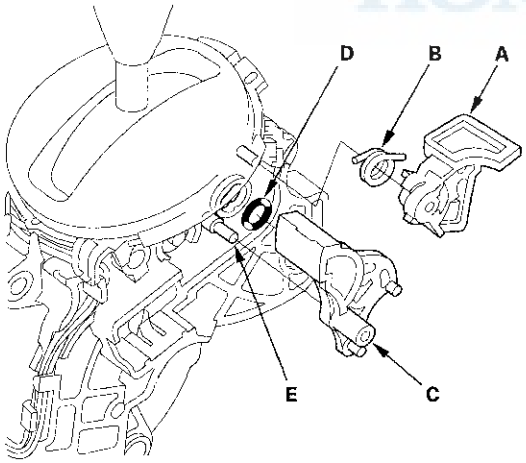

4. Remove the shift lock stop (C) and the stop cushion (D), and replace the shift lock stop or the stop cushion.

5. Install the shift lock stop cushion on the shift lock stop.

6. Apply silicone grease to the pin (E) on the shift lever bracket base, and install the shift lock stop over the pin.

7. Install the shift lock release spring and the shift lock release, apply silicone grease to the shift lock release mounting tip if necessary.

8. Apply silicone grease to the tip of the shift lock stop, and install the shift lock solenoid assembly by aligning the joint of the shift lock solenoid plunger with the tip of the shift lock stop.

9. Route the shift lock solenoid harness in the guide.

10. Install the shift lever assembly (see page 14-201).

Park Pin Switch Test

1. Remove the center console (see page 20-79).

2. Disconnect the park pin switch/A/T gear position indicator panel light harness connector (A).

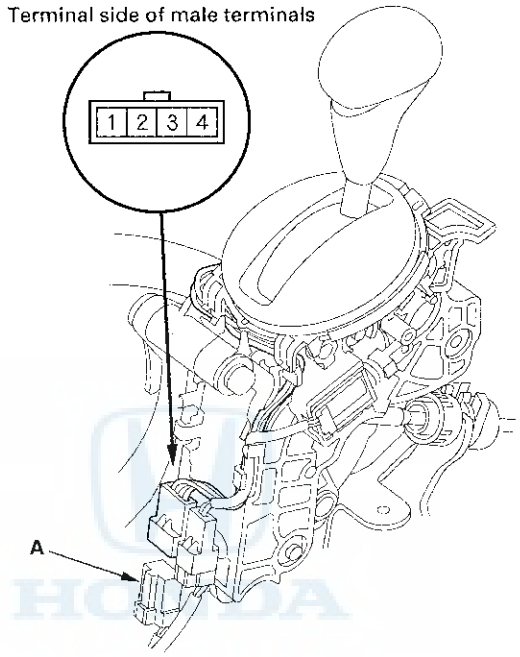

3. Shift the shift lever to P, and check for continuity between park pin switch/A/T gear position indicator panel light connector terminals No. 3 and No. 4.
   There should be no continuity.

4. Shift out of P, and check for continuity between connector terminals No. 3 and No. 4.
   There should be continuity.

5. If the park pin switch tests OK, install the center console (see page 20-79).
   If the park pin switch fails the test, replace the park pin switch (see page 14-214).

Transmission Disassembly

Special Tools Required
- Reverse brake spring compressor 07TAE-P4V0110
- Start clutch remover 07TAE-P4V0120

1. Remove the ATF pan (A) (18 bolts), the dowel pins (B) (2), and the ATF pan gasket (C).

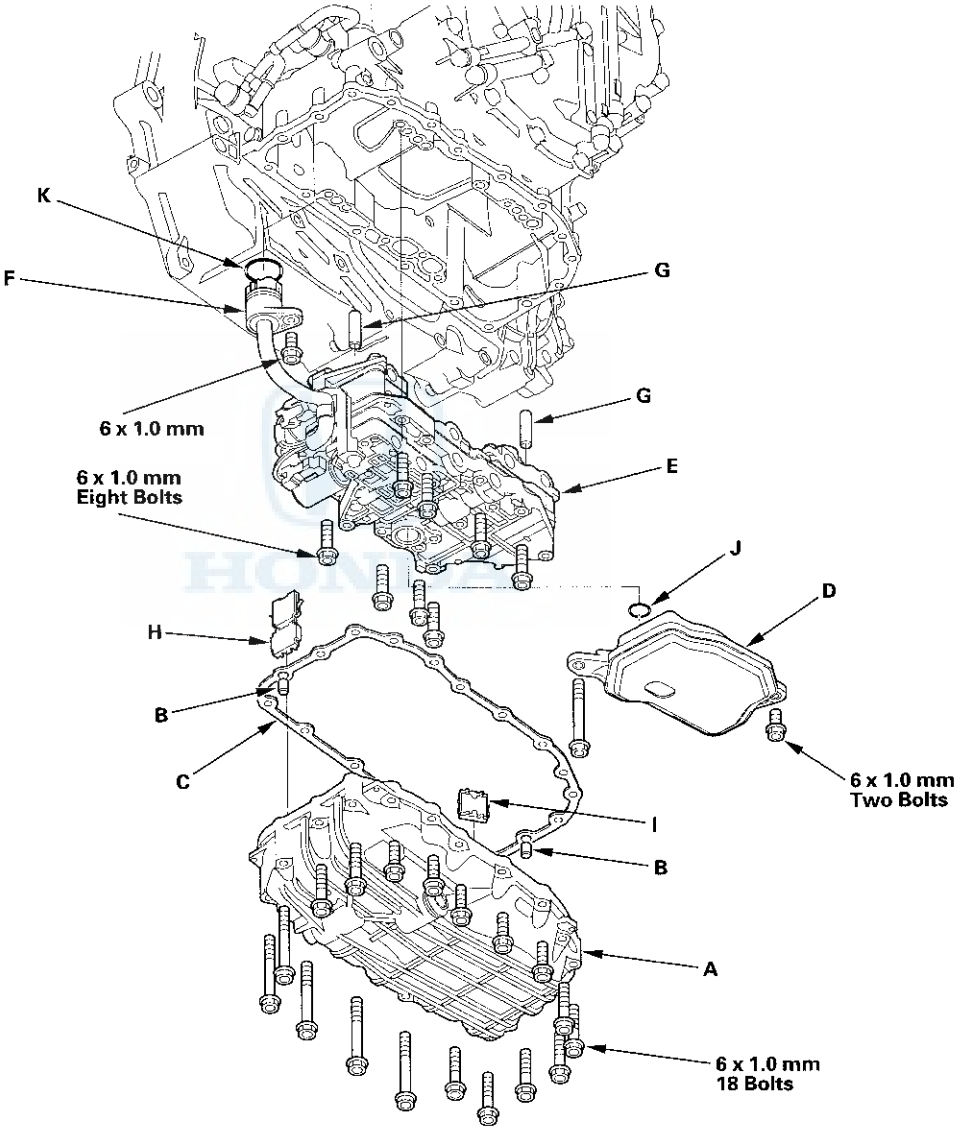

(cont'd)

Transmission Disassembly (cont'd)

2. Remove the ATF strainer (D) (two bolts).

3. Remove the eight bolts securing the lower valve body (E), lower the lower valve body, and hold it.

4. Remove the bolt securing the solenoid harness connector (F), and remove the lower valve body, dowel pins (G) and the solenoid harness connector from the transmission housing.

5. Remove the ATF magnets (H) (I), clean and reinstall them in the ATF pan.

6. Remove the O-ring (J) from the ATF strainer, and remove the O-ring (K) from the solenoid harness connector. Install new ones when reinstalling the lower valve body.

7. Clean the inlet opening (A) of the ATF strainer (B) thoroughly with compressed air, then check that it is in good condition and that the inlet opening is not clogged.

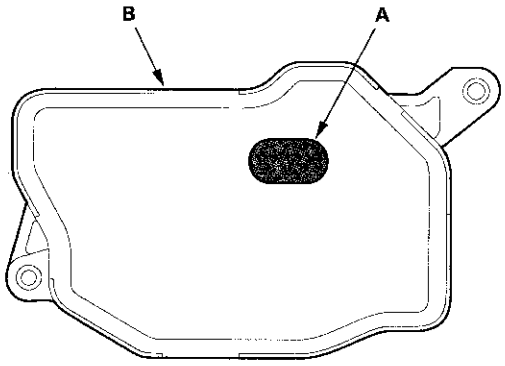

8. Test the ATF strainer by pouring clean ATF through the inlet opening, and replace it if it is clogged or damaged.

9. Position the transmission with its end cover facing down.

10. Remove the flywheel housing (A) (19 bolts) and the harness clamp bracket (B).

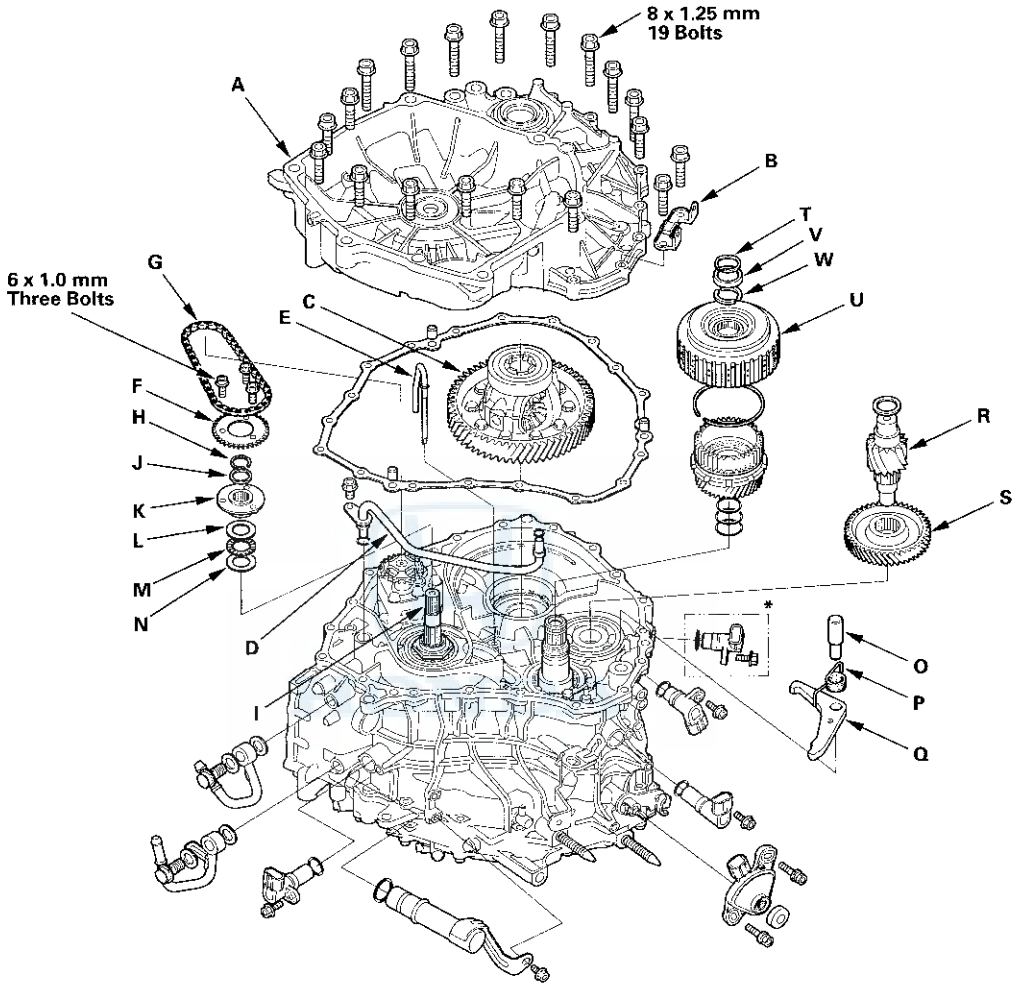

*: '06 model

11. Remove the differential assembly (C).

12. Remove the ATF passage pipe (D) and the lubrication pipe (E).

13. Remove the three bolts securing the ATF pump drive sprocket (F), then remove the ATF pump drive chain (G) and the ATF pump drive sprocket.

14. Remove the snap ring (H) from the input shaft (I), and remove the thrust shim (J), the ATF pump drive sprocket hub (K), the thrust washer (L), the thrust needle bearing (M), and the thrust washer (N) from the input shaft.

15. Remove the park pawl shaft (O), and remove the park pawl spring (P) and the park pawl (Q).

16. Remove the final drive shaft (R), then remove the secondary driven gear (S).

17. Remove the snap ring (T) securing the start clutch (U), and remove the cotter retainer (V) and the cotters (W).

(cont'd)

Transmission Disassembly (cont'd)

18. Set the start clutch remover on the start clutch (A), and attach the pawl (B) of the start clutch remover to the park gear (C) securely. Do not place the pawl of the start clutch remover on the start clutch guide. If the pawl contacts the start clutch guide, the clutch guide may be damaged. Be sure not to allow dust and other foreign particles to enter the driven pulley shaft.

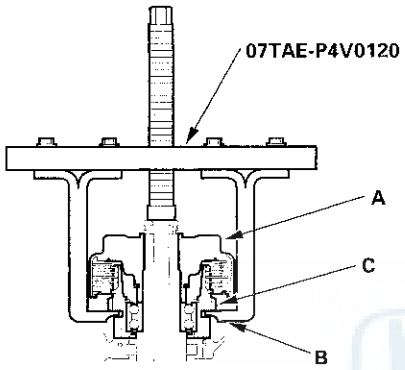

19. Remove the start clutch (A) from the driven pulley shaft.

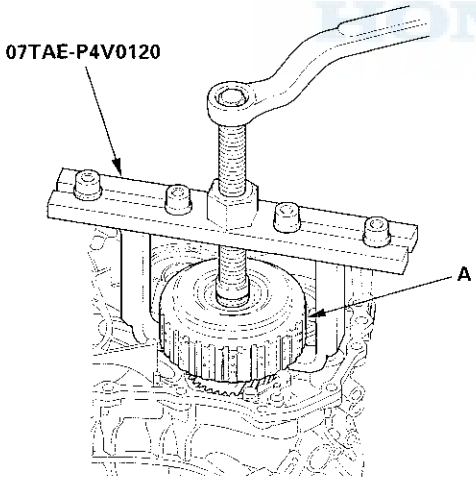

20. Remove the secondary drive gear from the start clutch.

21. Remove the sealing ring (A) from the secondary drive gear (B), and clean it; it will be reinstalled on a new secondary drive gear when assembling the transmission.

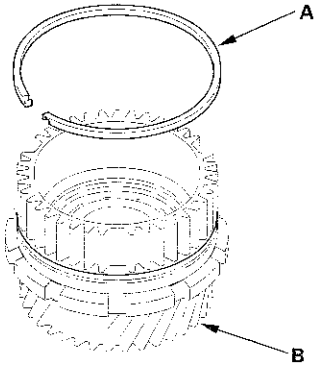

22. Remove the line bolts, then remove the ATF cooler lines.

23. Remove the ATF dipstick guide pipe.

24. Remove the transmission range switch.

25. '06 model: Remove the CVT input shaft (drive pulley) speed sensor, the CVT output shaft (driven pulley) speed sensor, the CVT speed sensor, and the CVT speed sensor (secondary).

26. '07-09 models: Remove the CVT input shaft (drive pulley) speed sensor, the CVT output shaft (driven pulley) speed sensor, and the CVT speed sensor.

27. Turn the transmission upside down, and set it on a workbench to prevent damaging to the input shaft and the driven pulley shaft.

28. Remove the end cover (A) (16 bolts).

'06 model

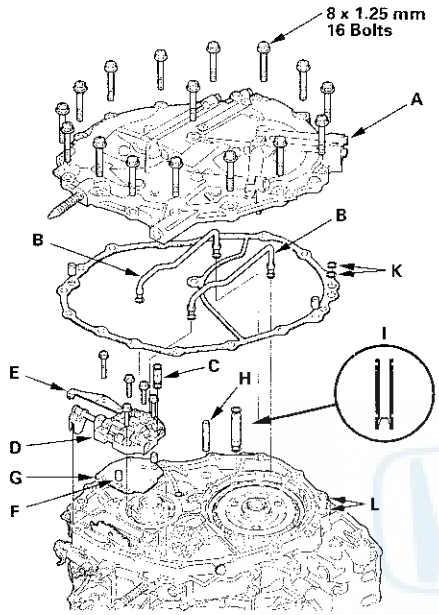

'07-09 models

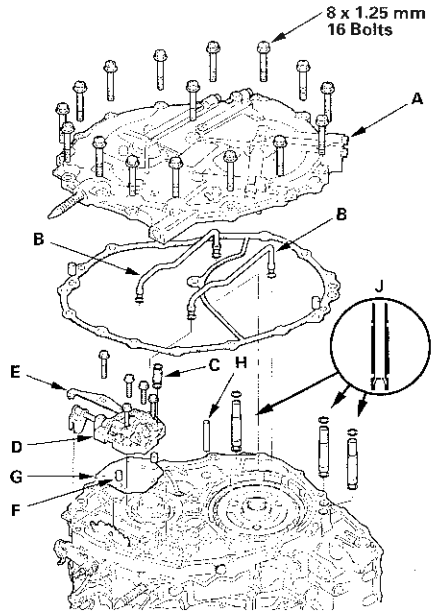

29. Remove the ATF feed pipes (B).

30. Remove the 10.9 x 18.6 mm ATF feed pipe (C) from the manual valve body (D).

31. Remove the manual valve body, the detent spring (E), the dowel pins (F) (two), and the separator plate (G).

32. Remove the 8 mm ATF pipe (H).

33. '06 model: Remove the 10.9 x 46 mm ATF feed pipe (I).

34. '07-09 models: Remove the 10.9 x 56 mm ATF feed pipes (J).

35. '06 model: Remove the O-rings (K) from the 10.9 x 46 mm ATF feed pipes (L).

36. Remove the planetary carrier/input shaft assembly (A), then remove the ring gear (B).

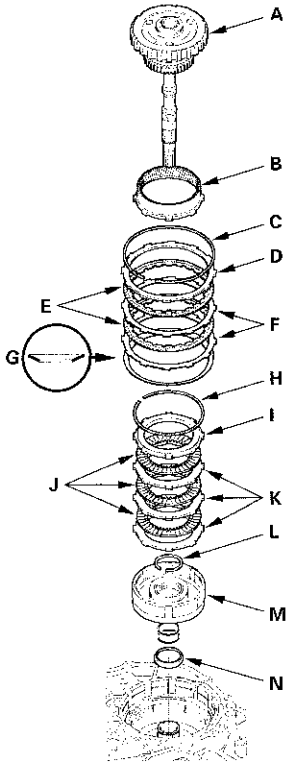

*: This illustration shows '07-09 models.

37. Remove the reverse brake snap ring (C), then remove the reverse brake end-plate (D), the brake discs (E), the brake plates (F), and the disc spring (G).

(cont'd)

Transmission Disassembly (cont'd)

38. Remove the snap ring (H) securing the forward clutch end-plate (I), then remove the forward clutch end-plate, the clutch discs (J), and the clutch plates (K).

39. Remove the snap ring (L) securing the forward clutch (M) to the drive pulley shaft, then remove the forward clutch and the snap ring retainer (N).

40. Install the reverse brake spring compressor to remove the snap ring securing the reverse brake return spring retainer.

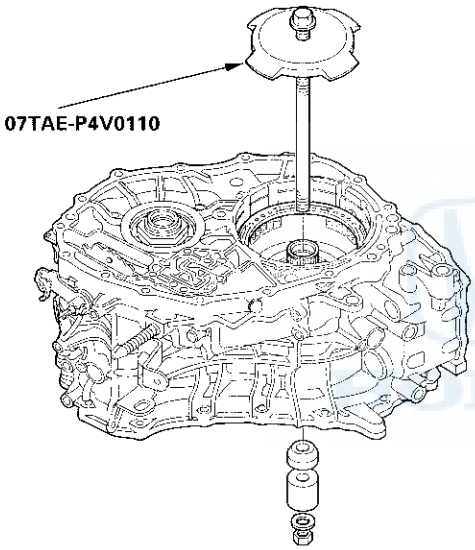

*: This illustration shows '07-09 models.

41. Compress the return spring using the reverse brake spring compressor. Be sure the reverse brake spring compressor is set over the reverse brake return springs.

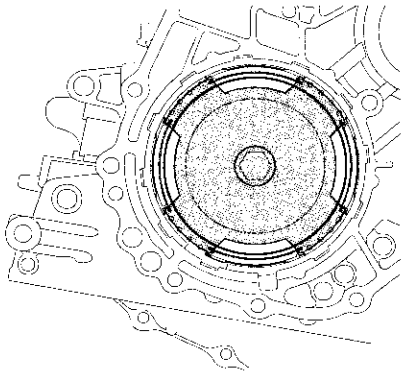

42. Remove the snap ring (A) while compressing the return spring.

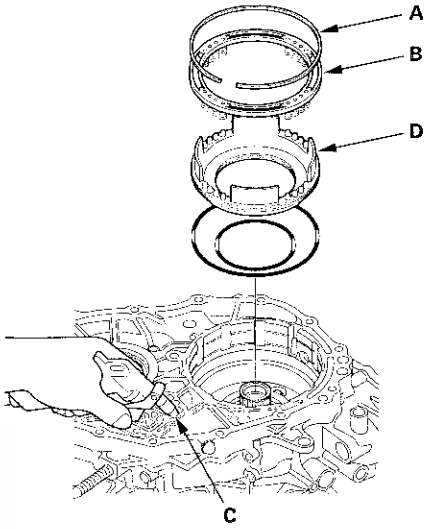

*: This illustration shows '07-09 models.

43. Remove the reverse brake spring compressor, then remove the spring retainer/return spring assembly (B).

44. Apply air pressure to reverse brake pressure circuit hole (C) to remove the reverse brake piston (D).

45. Remove the roller (A).

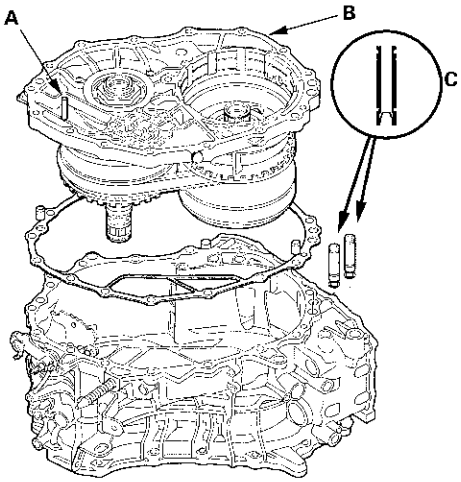

46. Remove the intermediate housing (B).

47. '06 model: Remove the 10.9 x 46 mm ATF feed pipes (C).

CVT Start Clutch Pressure Control Valve Removal/Installation

1. Disconnect the CVT start clutch pressure control valve connector (A).

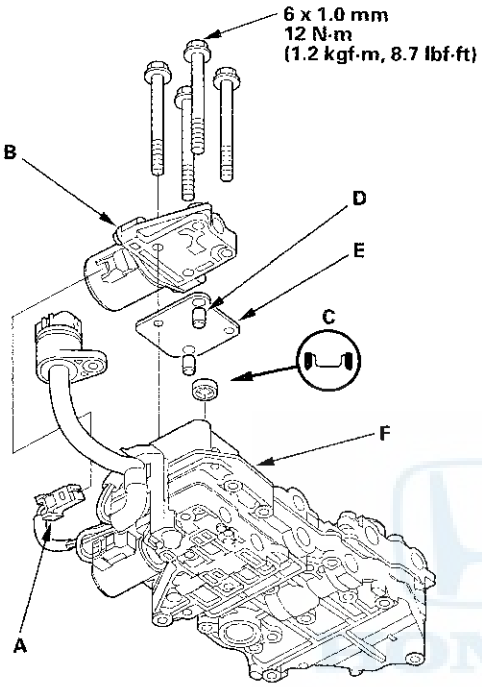

2. Remove the CVT start clutch pressure control valve (B).
3. Check that the filter (C) is in good condition, replace it if it is clogged or damaged.
4. Install the CVT start clutch pressure control valve with the dowel pins (D) and the separator plate (E) on the lower valve body (F).
5. Connect the CVT start clutch pressure control valve connector.

CVT Drive Pulley Pressure Control Valve Removal/Installation

1. Remove the solenoid harness clamp (A).

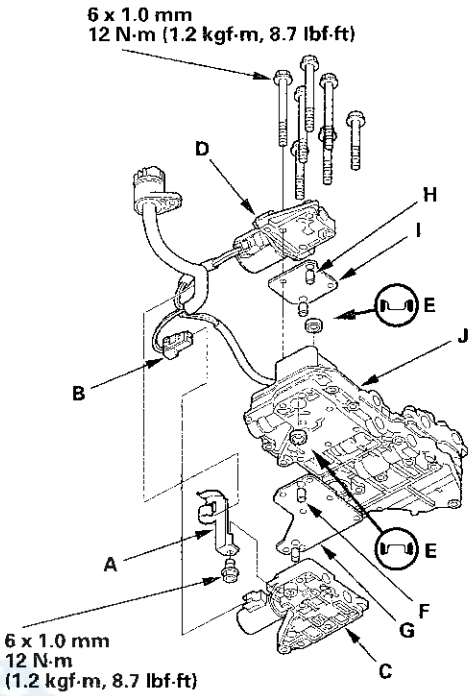

2. Disconnect the CVT drive pulley pressure control valve connector (B).
3. Remove the seven bolts, and remove the CVT drive pulley pressure control valve (C). The CVT start clutch pressure control valve (D) can also be removed.
4. Check that the filters (E) are in good condition, replace it if it is clogged or damaged.
5. Install the CVT drive pulley pressure control valve with the dowel pins (F) and the separator plate (G), and the CVT start clutch pressure control valve with the dowel pins (H) and the separator plate (I) on the lower valve body (J).
6. Connect the CVT drive pulley pressure control valve connector.
7. Install the solenoid harness clamp.

CVT Driven Pulley Pressure Control Valve Removal/Installation

1. Disconnect the CVT driven pulley pressure control valve connector (A) and the inhibitor solenoid connector (B).

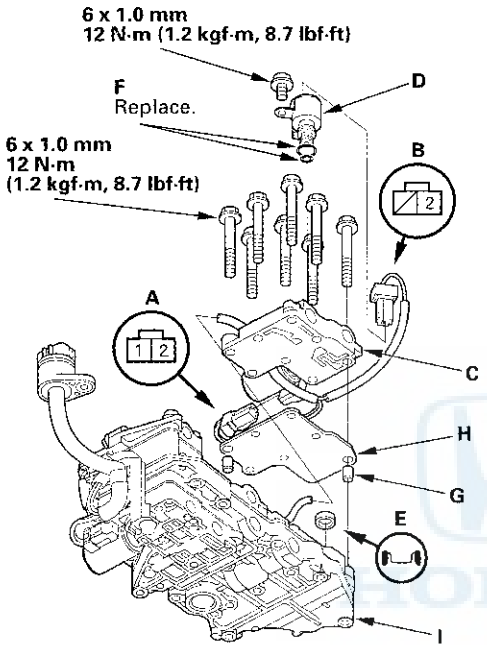

2. Remove the CVT driven pulley pressure control valve (C), and remove the inhibitor solenoid (D) from the CVT driven pulley pressure control valve.
3. Check that the filter (E) is in good condition, and replace it if it is clogged or damaged.
4. Remove the O-rings (F) from the inhibitor solenoid.
5. Install the O-rings on the inhibitor solenoid, then install the inhibitor solenoid on the CVT driven pulley pressure control valve.
6. Install the CVT driven pulley pressure control valve with the dowel pins (G) and the separator plate (H) on the lower valve body (I).
7. Connect the CVT driven pulley pressure control valve connector and the inhibitor solenoid connector.

Inhibitor Solenoid Removal/ Installation

1. Disconnect the inhibitor solenoid connector (A).

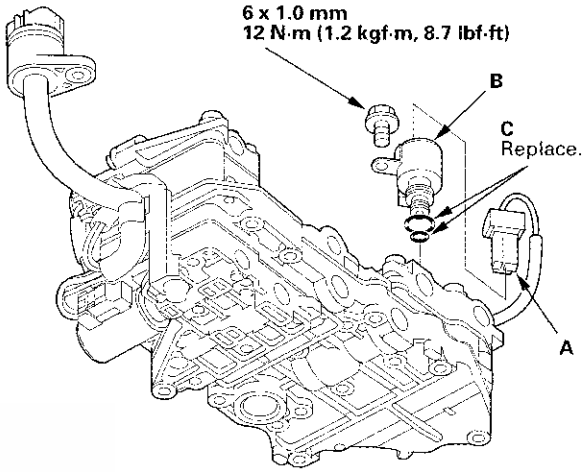

2. Remove the inhibitor solenoid (B), then remove the O-rings from the inhibitor solenoid.
3. Install the O-rings (C) on the inhibitor solenoid, then install the inhibitor solenoid on the CVT driven pulley pressure control valve.
4. Connect the inhibitor solenoid connector.

Final Drive Shaft Bearing Replacement

Special Tools Required
- Adjustable bearing puller, 20—40 mm 07736-A01000B or 07736-A01000A
- Attachment, 62 x 68 mm 07746-0010500
- Driver handle 15 x 135L 07749-0010000

1. Remove the final drive shaft bearing (A) using the 20—40 mm adjustable bearing puller and a commercially available 3/8 "-16 UNF slide hammer (B).

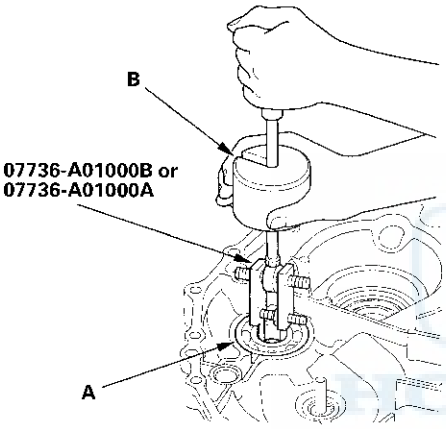

2. Install a new bearing into the flywheel housing using the driver handle and the 62 x 68 mm attachment.

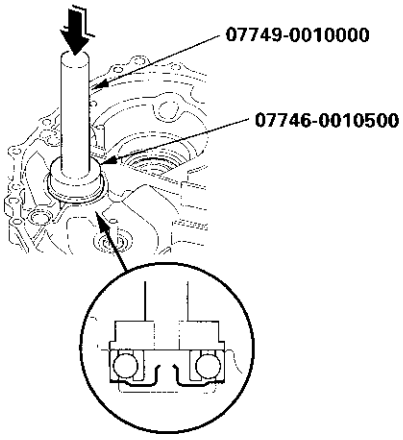

Input Shaft Oil Seal Replacement

Special Tools Required
- Attachment, 37 x 42 mm 07746-0010200
- Driver handle 15 x 135L 07749-0010000

1. Remove the input shaft oil seal from the flywheel housing.

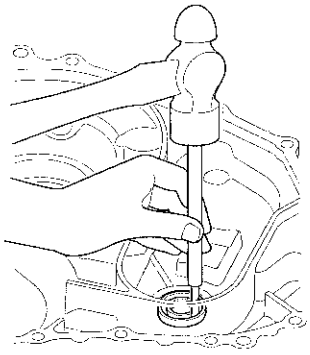

2. Install a new oil seal flush with 3±0.5 mm (0.12±0.02 in.) (A) below flywheel housing level. Using the driver handle and the 37 x 42 mm attachment.

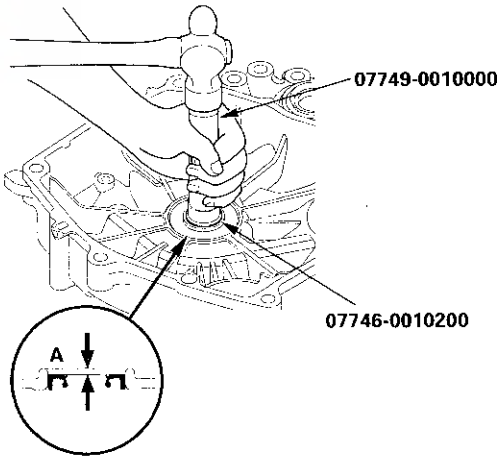

ATF Feed Pipe Replacement

1. Remove the feed pipe flange plates (A), then remove the feed pipes (B) and the feed pipe flanges (C) from the end cover (D).

   NOTE: Replace the end cover if replacement of the unremovable ATF feed pipes (E) is required.

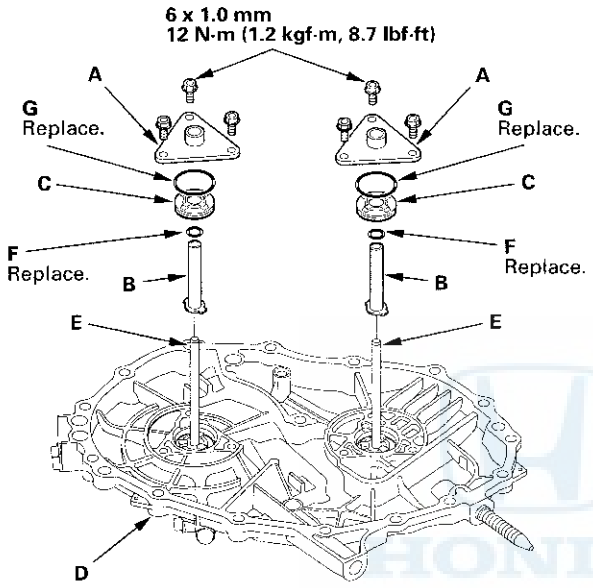

2. Install new O-rings (F) over the ATF feed pipes.

3. Install new O-rings (G) on the feed pipe flanges.

4. Install the feed pipe (A) through the feed pipe flange (B) by aligning the feed pipe tab (C) with the guide (D) on the flange.

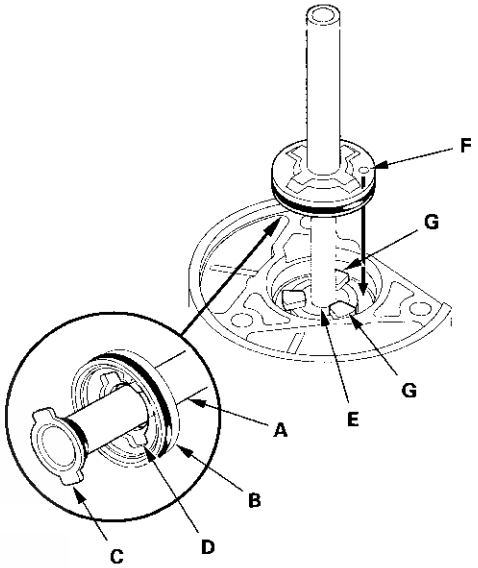

5. Install the ATF feed pipe over the unremovable feed pipe (E), and align the mark (F) on the feed pipe flange between the tabs (G) on the end cover.

6. Install the feed pipe flange plate.

Manual Valve Body Disassembly, Inspection, and Reassembly

1. Remove the spring seat (A), the valve spring (B), and the reverse inhibitor valve (C) from the manual valve body (D).

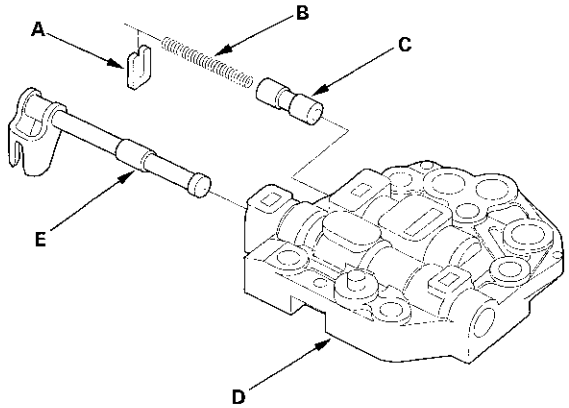

Reverse Inhibitor Valve Spring Specifications (Standards)

Wire diameter:	**0.9 mm (0.035 in.)**
Outside diameter:	**7.0 mm (0.276 in.)**
Free length:	**47.1 mm (1.854 in.)**
Number of coils:	**16.9**

2. Remove the manual valve (E).

3. Check all parts for wear and damage.

4. Clean all parts thoroughly in solvent, and dry with compressed air. Blow out all passages.

5. Coat all parts with CVTF during assembly.

6. Install the reverse inhibitor valve (A) and the valve spring (B) in the manual valve body (C). Push the valve spring in using a screwdriver (D), then install the spring seat (E).

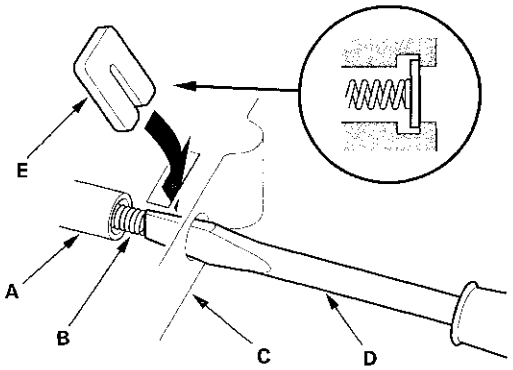

ATF Pump Replacement

1. Remove the bolts securing the ATF pump drive sprocket, then remove the ATF pump drive chain and the ATF pump drive sprocket.

2. Expand the snap ring (A) under the ATF driven sprocket (B), and remove the ATF pump driven sprocket from the ATF pump.

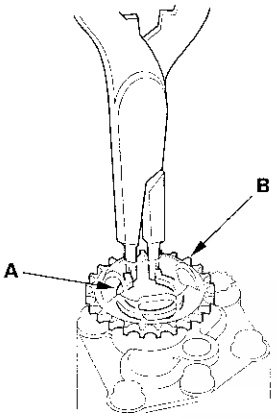

3. Remove the snap ring from the ATF pump.

4. Remove the ATF pump from the transmission housing.

5. Install the 22 x 10 mm ATF pipe (A) and the 18 x 10 mm ATF pipe (B) in the transmission housing, then install new O-rings (C) over the ATF pipes.

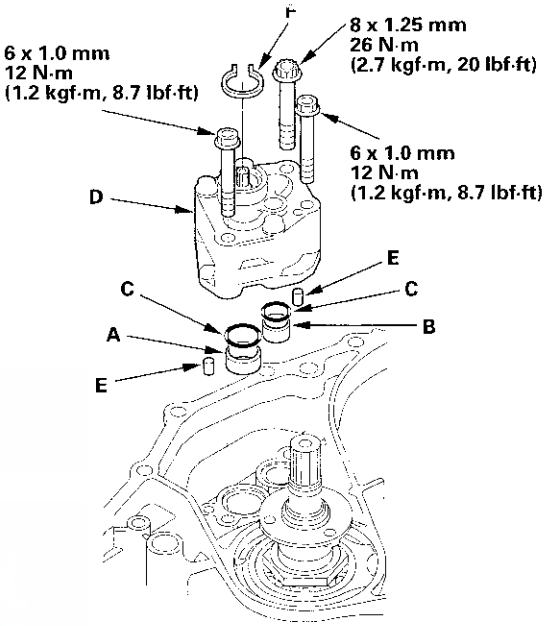

6. Install a new ATF pump body (D) with dowel pins (E). Do not pinch the O-rings.

7. Install the snap ring (F) in the snap ring groove.

8. Install the ATF pump driven sprocket.

9. Install the ATF pump chain and the ATF pump drive sprocket.

Driven Pulley Shaft Bearing Removal and Installation

Special Tools Required
- Oil seal driver attachment, 64 x 72 mm 07JAD-PN00100
- Driver handle 15 x 135L 07749-0010000

1. Expand the snap ring using snap ring pliers, then push the driven pulley shaft bearing out using the driver handle and the 64 x 72 mm oil seal driver attachment. Do not remove the snap ring unless it is necessary to clean the groove in the transmission housing.

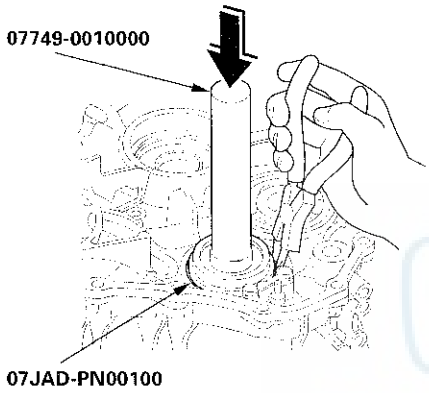

2. Expand the snap ring using snap ring pliers, and install the bearing part-way into the transmission housing.

3. Release the pliers, then push the bearing down into the transmission housing until the snap ring snaps in place around it.

4. After installing the bearing, check that the snap ring is seated in the bearing and the housing groove, and that the ring end gap (A) is 0—9 mm (0—0.35 in.).

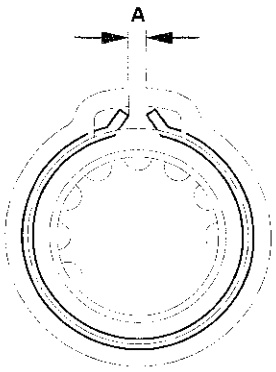

Final Drive Shaft Bearing Removal and Installation

Special Tools Required
- Adjustable bearing puller, 20—40 mm 07736-A01000B or 07736-A01000A
- Attachment, 72 x 75 mm 07746-0010600
- Driver handle 15 x 135L 07749-0010000

1. Remove the final drive shaft bearing (A) using the 20—40 mm adjustable bearing puller and a commercially available 3/8 "-16 UNF slide hammer (B).

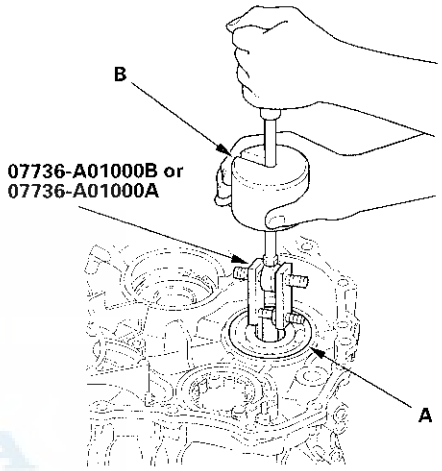

2. Install a new bearing into the transmission housing using the driver handle and the attachment, 72 x 75 mm.

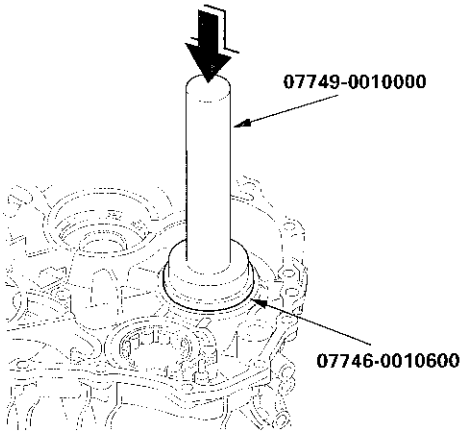

Selector Control Shaft Removal and Installation

1. Remove the bolt (A) and the lock washer (B), then remove the selector control lever (C) from the selector control shaft (D).

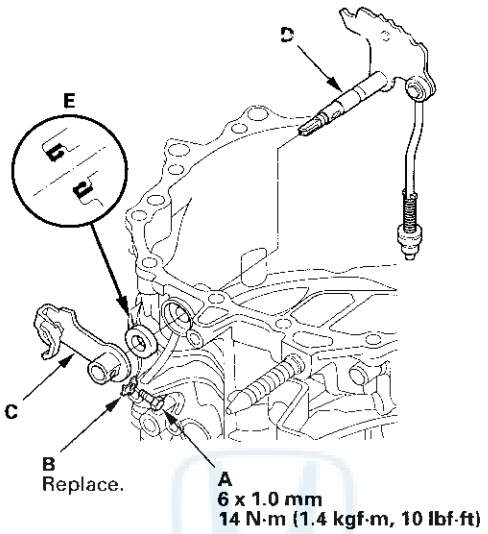

2. Remove the selector control shaft from the transmission housing.

3. Check for fluid leaks between the transmission housing and the oil seal (E). If there is a fluid leak, replace the oil seal with a new one.

4. Install the selector control shaft in the transmission housing, and install the selector control lever on the selector control shaft.

5. Install the lock bolt with a new lock washer.

Planetary Carrier Clearance Inspection

1. Measure the clearance between the 25 x 31 mm thrust shim (A) and the snap ring (B) using a feeler gauge (C), in at least three places. Use the average as the actual clearance.

   Standard: 0.050—0.115 mm (0.0020—0.0045 in.)

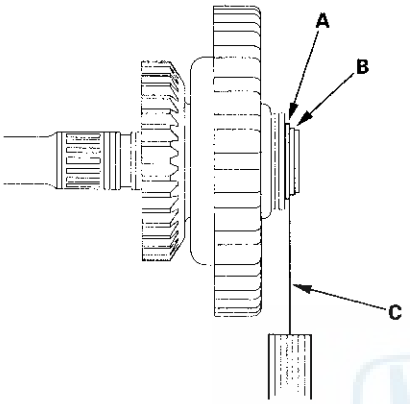

2. If the clearance is out of standard, remove the 25 x 31 mm thrust shim (A) and measure its thickness.

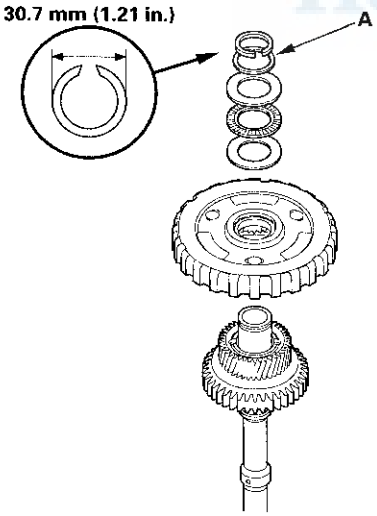

3. Select and install a new thrust shim, and secure them with the snap ring, then recheck.

THRUST SHIM, 25 x 31 mm

No.	Part Number	Thickness
A	90451-P4V-000	1.05 mm (0.041 in.)
B	90452-P4V-000	1.12 mm (0.044 in.)
C	90453-P4V-000	1.19 mm (0.047 in.)
D	90454-P4V-000	1.26 mm (0.050 in.)
E	90455-P4V-000	1.33 mm (0.052 in.)
F	90456-P4V-000	1.40 mm (0.055 in.)
G	90457-P4V-000	1.47 mm (0.058 in.)
H	90458-P4V-000	1.54 mm (0.061 in.)
I	90459-P4V-000	1.61 mm (0.063 in.)
J	90460-P4V-000	1.68 mm (0.066 in.)
K	90461-P4V-000	1.75 mm (0.069 in.)
L	90462-P4V-000	1.82 mm (0.072 in.)
M	90480-P4V-000	1.085 mm (0.0427 in.)
N	90481-P4V-000	1.155 mm (0.0455 in.)
O	90482-P4V-000	1.225 mm (0.0482 in.)
P	90483-P4V-000	1.295 mm (0.0510 in.)
Q	90484-P4V-000	1.365 mm (0.0537 in.)
R	90485-P4V-000	1.435 mm (0.0565 in.)
S	90486-P4V-000	1.505 mm (0.0593 in.)
T	90487-P4V-000	1.575 mm (0.0620 in.)
U	90488-P4V-000	1.645 mm (0.0648 in.)
V	90489-P4V-000	1.715 mm (0.0675 in.)
W	90490-P4V-000	1.785 mm (0.0703 in.)

4. After replacing the 25 x 31 mm thrust shim, make sure that the clearance is within the standard.

5. Check that the snap ring outside diameter is 30.7 mm (1.21 in.) or less.

Clutch Disassembly

Special Tools Required
Clutch spring compressor set 07LAE-PX40000

1. Remove the snap ring (A), then remove the clutch end-plate, the clutch discs, and the plates using a screwdriver (B).

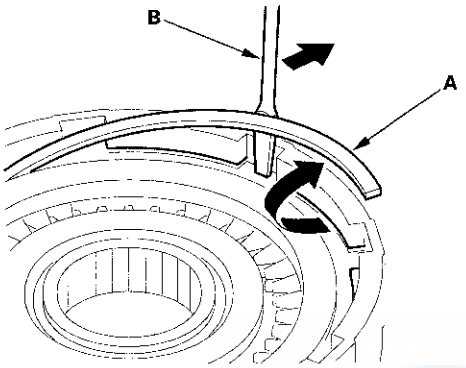

2. Remove the wave spring.

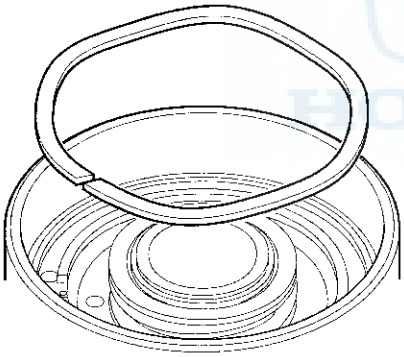

3. Install the clutch spring compressor on the clutch assembly.

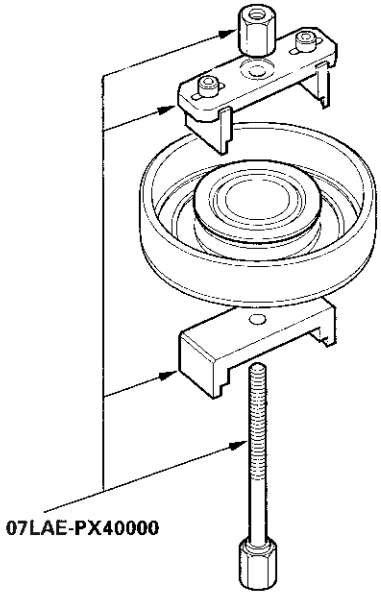

4. Be sure the clutch spring compressor (A) is adjusted to have full contact with the spring retainer (B) on the clutch.

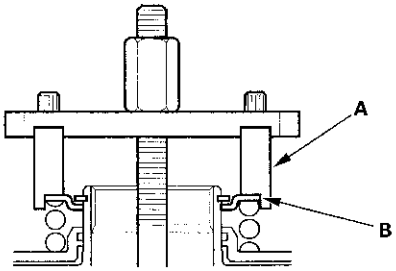

5. Check the placement of the clutch spring compressor. If either end of the clutch spring compressor is set over an area of the spring retainer which is unsupported by the return spring, the retainer may be damaged.

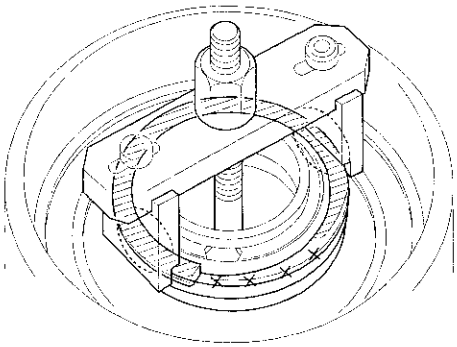

6. Compress the spring until the snap ring can be removed.

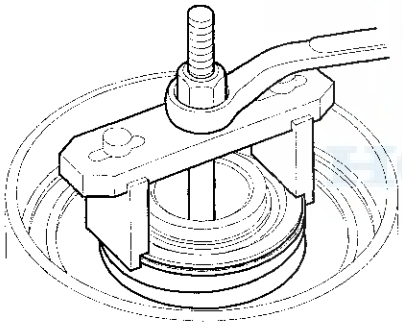

7. Remove the snap ring (A). Then remove the clutch spring compressor (B), the spring retainer (C), and the return spring.

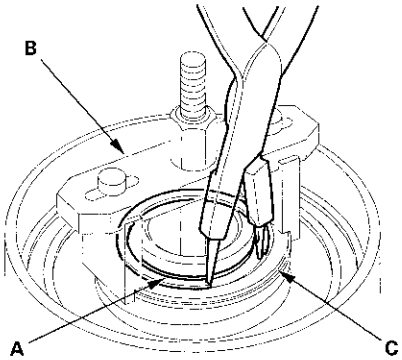

8. Wrap a shop rag around the clutch drum (A), and apply air pressure to the fluid passage to remove the piston (B). Place a finger tip on the other end while applying air pressure.

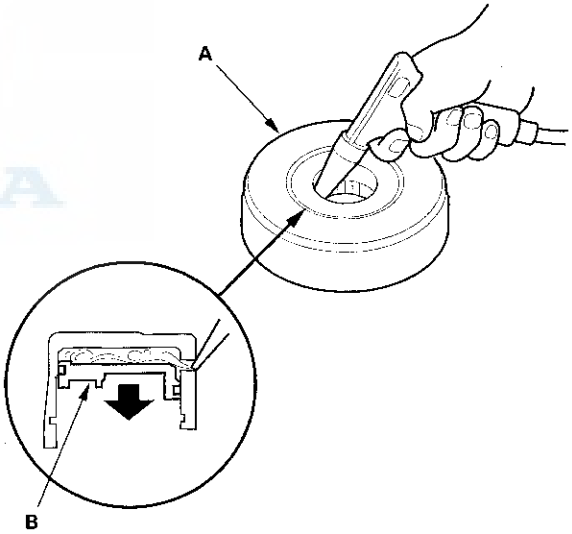

Clutch Reassembly

Special Tools Required
- Clutch spring compressor set 07LAE-PX40000
- Clutch compressor attachment 07ZAE-PRP0100

1. Inspect the clutch piston (A) and the clutch piston check valve (B). If the clutch check valve is loose or damaged, replace the clutch piston.

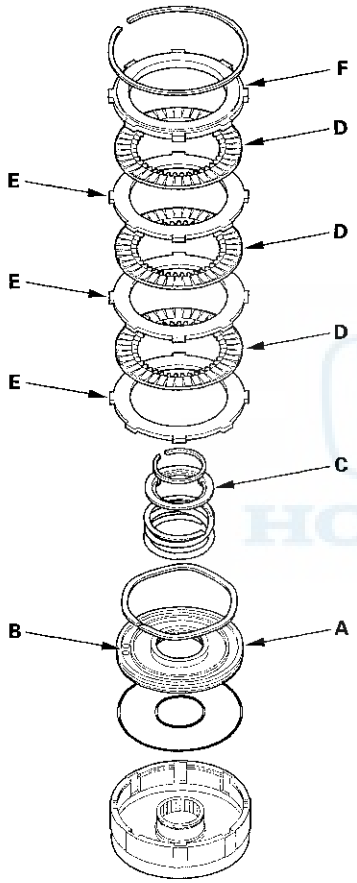

2. Check the spring retainer (C) for wear and damage.

3. Inspect the clutch discs (D), the clutch plates (E), and the clutch end-plate (F) for wear, damage, and discoloration.

   - If the clutch discs are worn or damaged, replace the discs as a set.
   - If the clutch plates are worn, damaged, or discolored, replace the plates as a set.
   - If the clutch end-plate is worn, damaged, or discolored, inspect the clearance between the end-plate and the top disc, then replace the clutch end-plate.

4. Soak the clutch discs thoroughly in CVTF for a minimum of 30 minutes.

5. Install new O-rings (A) on the clutch piston (B).

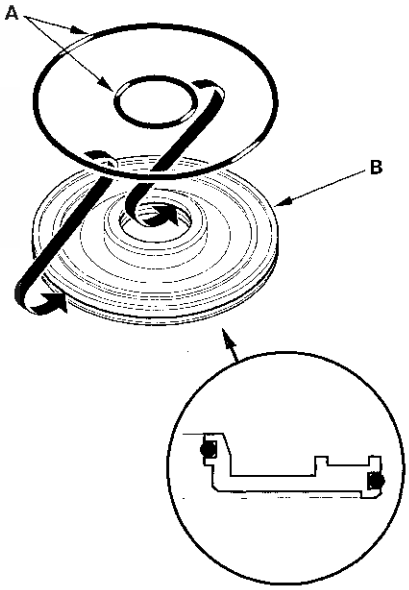

6. Install the piston (A) in the clutch drum (B). Apply pressure and rotate to ensure proper seating. Lubricate the piston O-ring with CVTF before installing. Do not pinch the O-ring by installing the piston with excessive force.

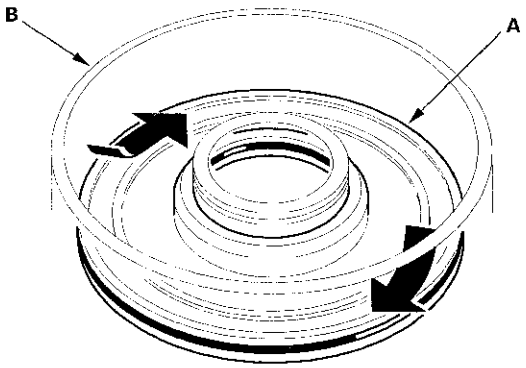

7. Install the return spring (A) and the spring retainer (B), and position the snap ring (C) on the retainer.

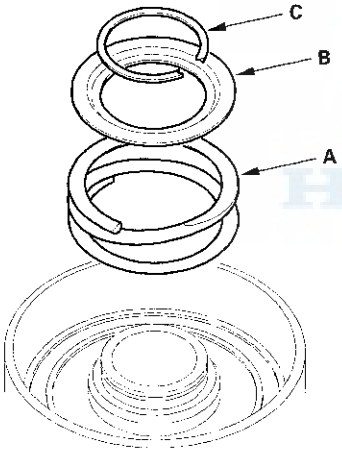

8. Install the clutch spring compressor.

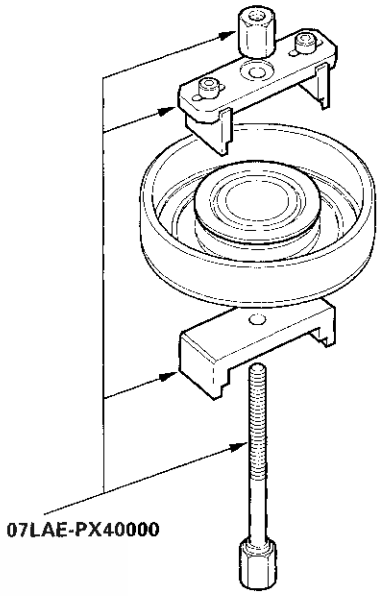

9. Be sure the clutch spring compressor (A) is adjusted to have full contact with the spring retainer (B) on the clutch.

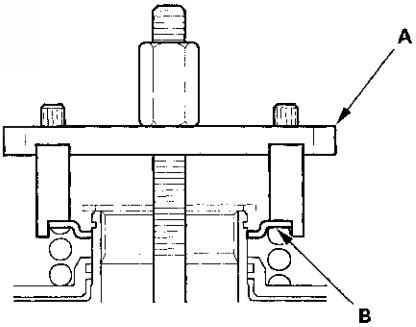

(cont'd)

Clutch Reassembly (cont'd)

10. Check the placement of the clutch spring compressor. If either end of the clutch spring compressor is set over an area of the spring retainer which is unsupported by the return spring, the spring retainer may be damaged.

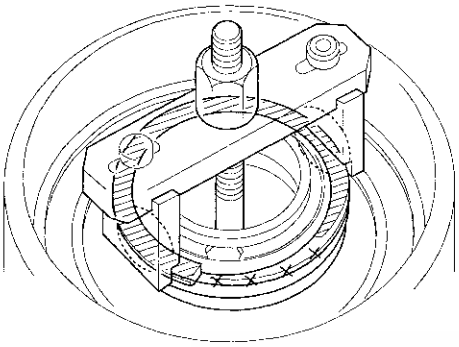

11. Compress the return spring.

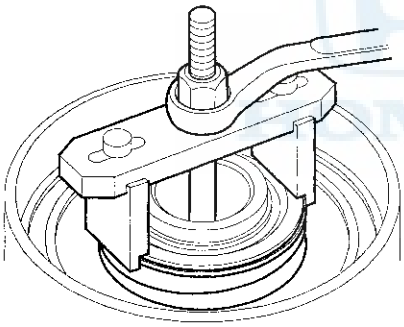

12. Install the snap ring (A).

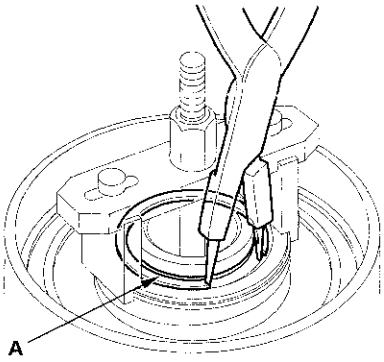

13. Remove the clutch spring compressor.

14. Install the wave spring.

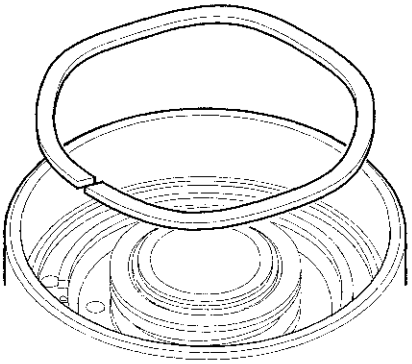

15. Starting with a clutch plate, alternately install the clutch plates and the discs. Install the clutch end-plate (A) with the flat side toward the disc (B).

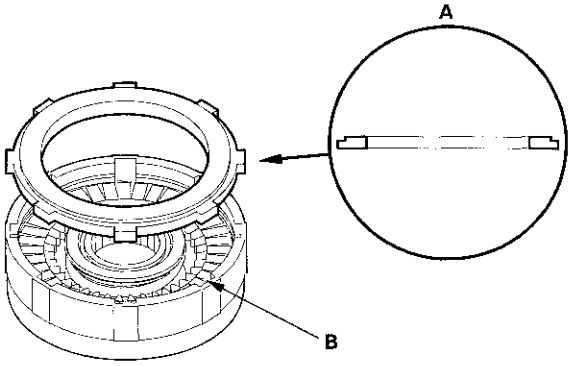

16. Install the snap ring (A) using a screwdriver (B).

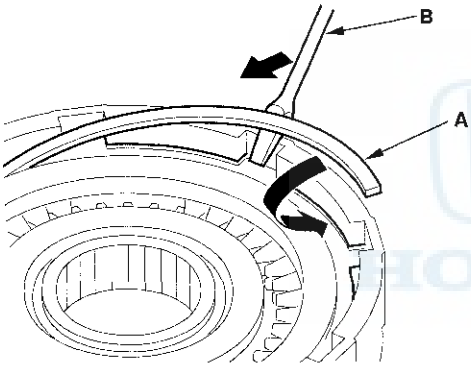

17. Check that the snap ring end gap (A) is 7.9 mm (0.311 in.) or more.

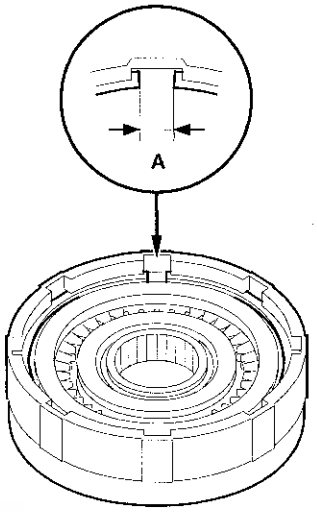

18. Check that the clutch piston engages by applying air pressure to the fluid passage, and also check that the piston releases when air pressure is released.

19. Set a dial indicator (A) on the clutch end-plate (B).

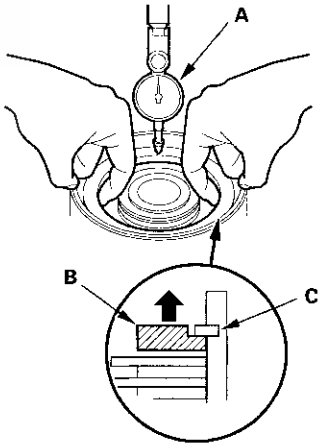

20. Zero the dial indicator with the clutch end-plate lifted up to the snap ring (C).

(cont'd)

Clutch Reassembly (cont'd)

21. Release the clutch end-plate to lower the clutch end-plate, then put the clutch compressor attachment on the end-plate (A).

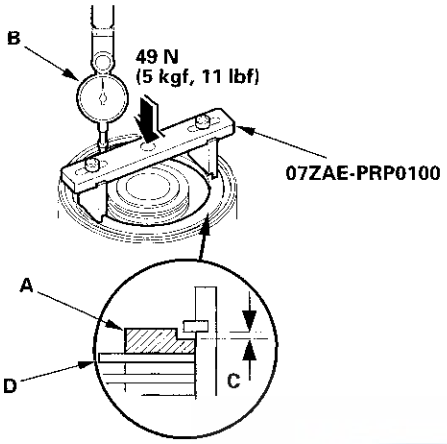

22. Press the clutch compressor attachment down with 49 N (5 kgf, 11 lbf) using a force gauge, and read the dial indicator (B). The dial indicator reads the clearance (C) between the clutch end-plate and the top disc (D). Take measurements in at least three places, and use the average as the actual clearance.

Clearance between Clutch End-plate and Top Disc
Service Limit: 0.6—0.8 mm (0.024—0.031 in.)

23. If the clearance is out of service limit, select a new clutch end-plate from the following table.

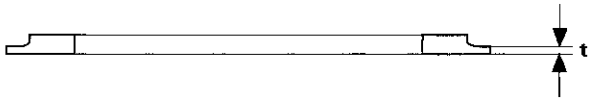

FORWARD CLUTCH END-PLATE

Mark	Part Number	Thickness (t)
4	22554-PC9-000	2.7 mm (0.106 in.)
5	22555-PC9-000	2.8 mm (0.110 in.)
6	22556-PC9-000	2.9 mm (0.114 in.)
7	22557-PC9-000	3.0 mm (0.118 in.)
8	22558-PC9-000	3.1 mm (0.122 in.)
9	22559-PC9-000	3.2 mm (0.126 in.)
10	22560-PC9-000	3.3 mm (0.130 in.)
14	22574-P4V-003	3.4 mm (0.134 in.)
15	22561-P4V-003	3.5 mm (0.138 in.)
16	22562-P4V-003	3.6 mm (0.142 in.)
17	22563-P4V-003	3.7 mm (0.146 in.)
18	22564-P4V-003	3.8 mm (0.150 in.)
19	22565-P4V-003	3.9 mm (0.154 in.)
20	22566-P4V-003	4.0 mm (0.157 in.)
21	22567-P4V-003	4.1 mm (0.161 in.)
22	22568-P4V-003	4.2 mm (0.165 in.)
23	22569-P4V-003	4.3 mm (0.169 in.)
24	22570-P4V-003	4.4 mm (0.173 in.)
25	22571-P4V-003	4.5 mm (0.177 in.)

24. Install a new clutch end-plate, then recheck the clearance. If the thickest clutch end-plate is installed, but the clearance is still over the service limit, replace the clutch discs and the plates.

Thrust Clearance Inspection

NOTE: If the transmission housing, the flywheel housing, the final drive shaft, the secondary driven gear, or the final drive shaft bearing is replaced, the final drive shaft thrust clearance must be adjusted with a 25 x 35 mm thrust shim.

1. Install the secondary driven gear (A) on the final drive shaft (B), then install the final drive shaft in the transmission housing. Install the existing 25 x 35 mm thrust washer (C).

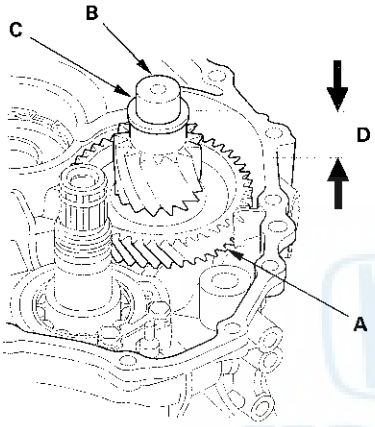

Final Drive Shaft Cutaway View

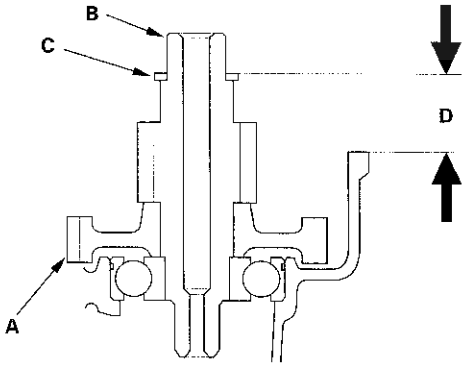

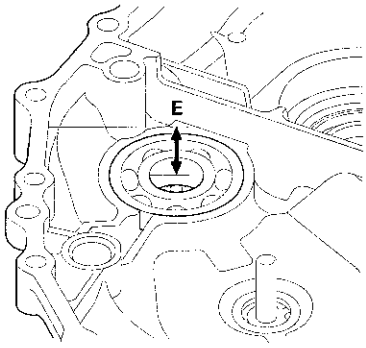

Final Drive Shaft Bearing Cutaway View

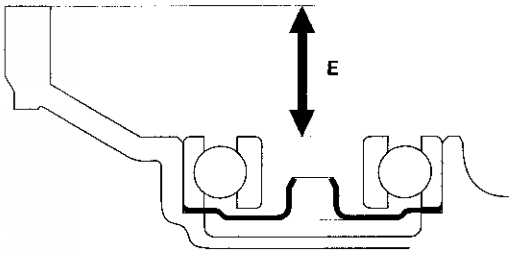

2. Measure the distance (D) between the transmission housing surface and the thrust shim surface on the final drive shaft, then note the measurement (measurement D).

3. Measure the distance (E) between the flywheel housing surface and the bearing inner race surface, then note the measurement (measurement E).

4. Calculate the final drive shaft thrust clearance using the formula:

   Clearance
   = Measurement D−Measurement E+Flywheel housing gasket thickness (0.5 mm)

   Standard: 0—0.15 mm (0—0.006 in.)

   NOTE: The standard of the clearance includes thickness of the flywheel housing gasket (0.5 mm, 0.02 in.).

(cont'd)

Thrust Clearance Inspection (cont'd)

5. If the clearance is out of standard, select a 25 x 35 mm thrust shim from the following table.

THRUST SHIM, 25 x 35 mm

No.	Part Number	Thickness
A	90551-P4V-000	2.8 mm (0.110 in.)
B	90552-P4V-000	2.9 mm (0.114 in.)
C	90553-P4V-000	3.0 mm (0.118 in.)
D	90554-P4V-000	3.1 mm (0.122 in.)
E	90555-P4V-000	3.2 mm (0.126 in.)
F	90556-P4V-000	3.3 mm (0.130 in.)
G	90557-P4V-000	3.4 mm (0.134 in.)
H	90558-P4V-000	3.5 mm (0.138 in.)
I	90559-P4V-000	3.6 mm (0.142 in.)
J	90560-P4V-000	3.7 mm (0.146 in.)
K	90561-P4V-000	3.8 mm (0.150 in.)
L	90562-PWR-000	3.9 mm (0.154 in.)
M	90563-PWR-000	4.0 mm (0.157 in.)

HONDA

Transmission Reassembly

Special Tools Required
- Reverse brake spring compressor 07TAE-P4V0110
- Start clutch installer 07TAE-P4V0130

1. Soak the reverse brake discs thoroughly in CVTF for a minimum of 30 minutes.

2. '06 model: Install new O-rings (A) on the filter side of the ATF feed pipes (10.9 x 46 mm) (B), then install them with O-ring side into the housing.

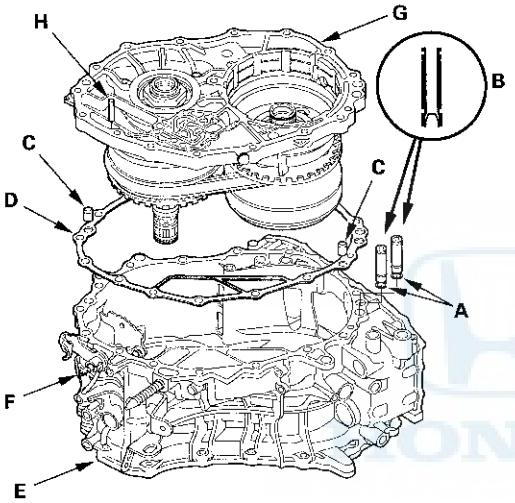

3. Install the dowel pins (C) (two) and a new gasket (D) on the transmission housing (E).

4. Push the selector control shaft (F) toward the outside of the transmission housing, then install the intermediate housing (G).

5. Pull the selector control shaft back, then install the roller (H) in the intermediate housing by aligning the groove on the selector control shaft.

6. Install new O-rings (A) on the reverse brake piston (B), then install the piston in the intermediate housing (C).

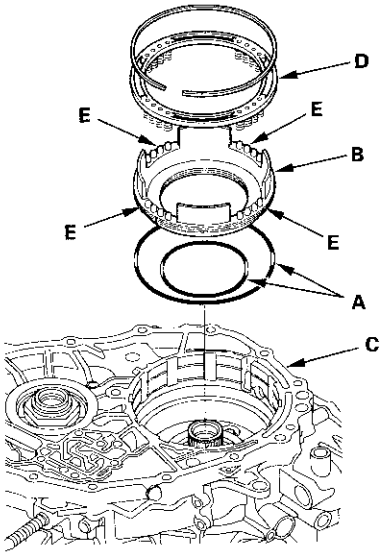

*: This illustration shows '07-09 models.

7. Install the spring retainer/return spring assembly (D); install the return springs on the spring guides (E) on the reverse brake piston.

(cont'd)

Transmission Reassembly (cont'd)

8. Install the reverse brake spring compressor through the drive pulley shaft to compress the return spring. Be sure the reverse brake spring compressor is set over the return springs, not over the reverse brake piston.

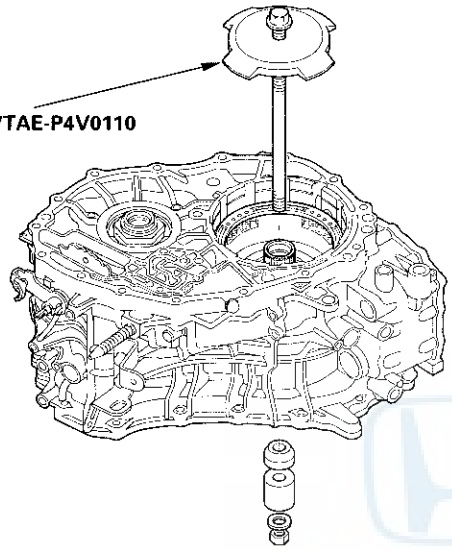

*: This illustration shows '07-09 models.

9. Compress the return springs and make sure that the reverse brake spring compressor is set over the return springs and the spring retainer tabs do not ride on the reverse brake piston.

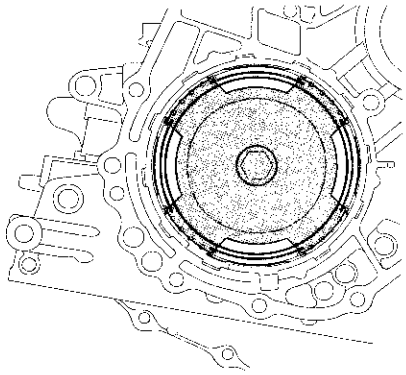

10. Install the snap ring in the intermediate housing above the spring retainer, and remove the reverse brake spring compressor.

11. Check that the snap ring end gap (A) is 15 mm (0.59 in.) or more.

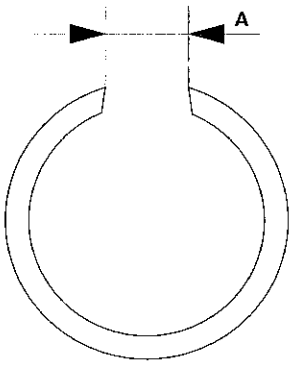

12. Install the disc spring (A) on the reverse brake piston in the direction shown.

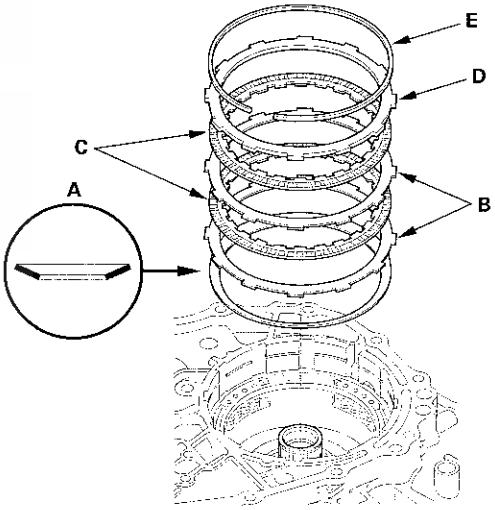

*: This illustration shows '07-09 models.

13. Starting with the reverse brake plates (B), alternately install the plates and discs (C). Install the reverse brake end-plate (D), then install the snap ring (E).

14. Check that the snap ring inside diameter (A) is 143.5 mm (5.65 in.) or more, and also the snap ring end gap (B) is 8.7 mm (0.34 in.) or more.

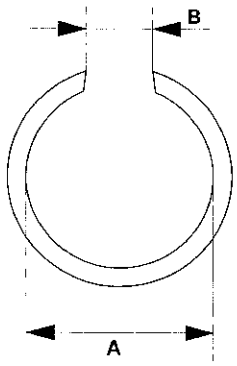

15. Set up a dial indicator (A) on the reverse brake end-plate (B).

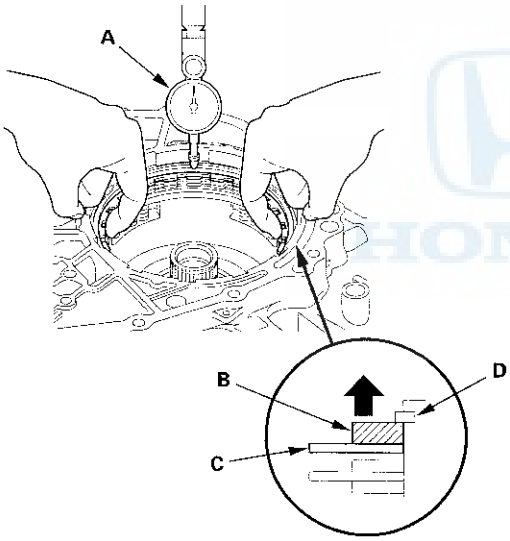

*: This illustration shows '07-09 models.

16. Zero the dial indicator by lifting the top disc (C) up against the reverse brake end-plate and the end-plate up against the snap ring (D).

17. Release the end-plate to lower the end-plate, and place a steel plate across width of the reverse brake end-plate.

18. Press the steel plate (A) down with 49 N (5 kgf, 11 lbf) using a force gauge, and read the dial indicator (B). The dial indicator reads the clearance (C) between the reverse brake end-plate (D) and the top disc (E). Take measurements in at least three places, and use the average as the actual clearance.

Standard: 0.55—0.70 mm (0.022—0.028 in.)

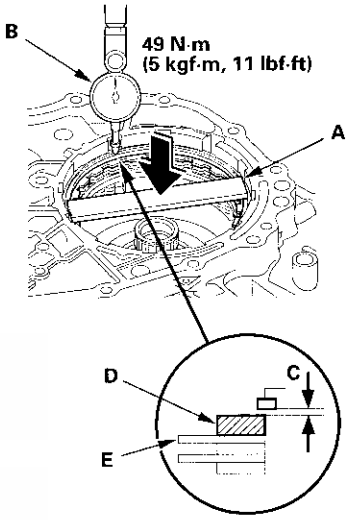

*: This illustration shows '07-09 models.

19. If the clearance is out of standard, select a new reverse brake end-plate from the following table.

REVERSE BRAKE END-PLATE

No.	Part Number	Thickness
1	22551-P4V-003	3.6 mm (0.142 in.)
A	22551-PWR-003	3.7 mm (0.146 in.)
2	22552-P4V-003	3.8 mm (0.150 in.)
B	22552-PWR-003	3.9 mm (0.154 in.)
3	22553-P4V-003	4.0 mm (0.157 in.)
C	22553-PWR-003	4.1 mm (0.161 in.)
4	22554-P4V-003	4.2 mm (0.165 in.)
D	22554-PWR-003	4.3 mm (0.169 in.)
5	22555-P4V-003	4.4 mm (0.173 in.)
E	22555-PWR-003	4.5 mm (0.177 in.)
6	22556-P4V-003	4.6 mm (0.181 in.)
F	22556-PWR-003	4.7 mm (0.185 in.)
7	22557-P4V-003	4.8 mm (0.189 in.)
8	22558-P4V-003	5.0 mm (0.197 in.)

20. If replacing the reverse brake end-plate, make sure that the clearance is within the tolerance.

(cont'd)

Transmission Reassembly (cont'd)

21. Install the snap ring retainer (A) over the drive pulley shaft (B).

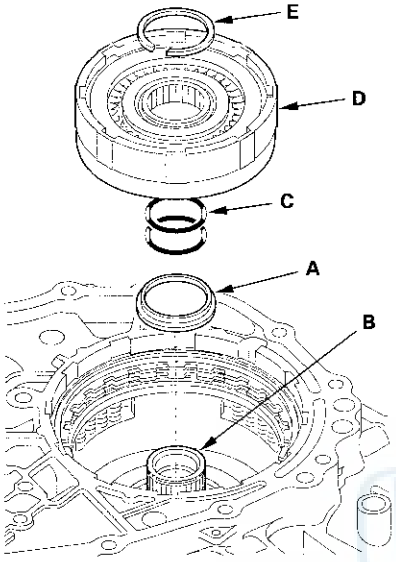

*: This illustration shows '07-09 models.

22. Wrap the drive pulley shaft splines with tape to prevent O-ring damage. Install new O-rings (C) in the drive pulley shaft O-ring grooves, then remove the tape.

23. Install the forward clutch (D) on the drive pulley shaft, then install the snap ring (E) to secure the forward clutch.

24. Check that the snap ring outside diameter (A) is 41.4 mm (1.63 in.) or less.

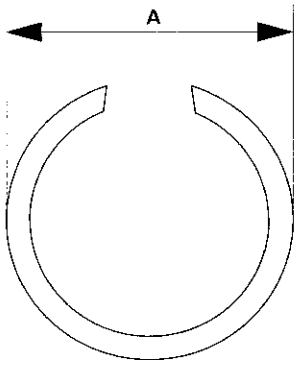

25. Install the ring gear (A) on the forward clutch (B).

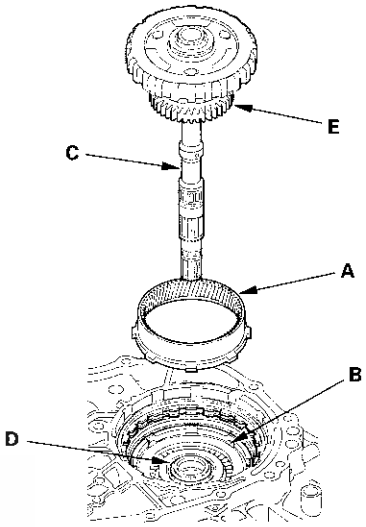

*: This illustration shows '07-09 models.

26. Install the input shaft/planetary carrier assembly (C) through the drive pulley shaft (D) by aligning the sun gear (E) with the forward clutch discs and aligning the planetary carrier with the reverse brake discs.

27. Install the manual valve body separator plate (A) and the dowel pins (B) (two) on the intermediate housing, then install the manual valve body (C) and the detent spring (D).

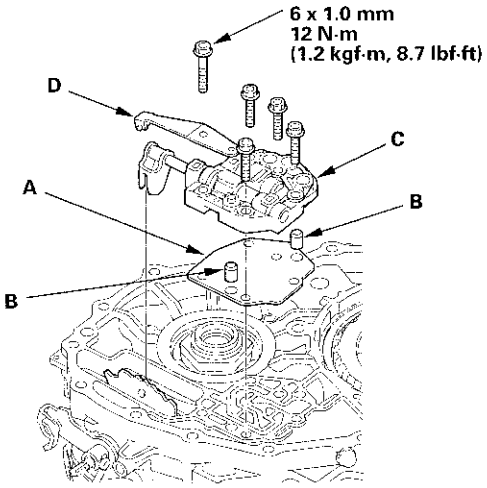

28. Install new O-rings (A) on the 10.9 x 18.6 mm ATF feed pipe (B), then install it on the manual valve body (C).

'06 model

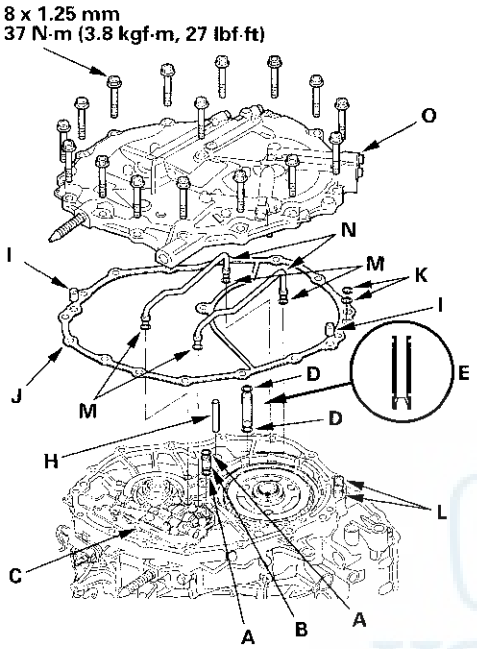

'07-09 models

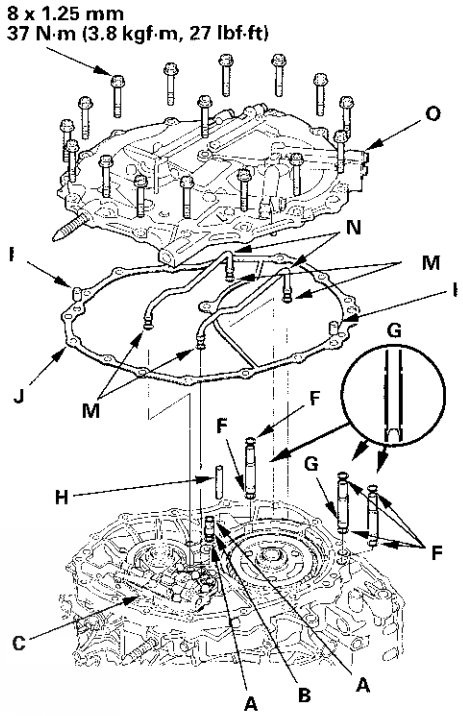

29. '06 model: Install new O-rings (D) on the 10.9 x 46 mm ATF feed pipe (E), then install it with the filter end.

30. '07-09 models: Install new O-rings (F) on the 10.9 x 56 mm ATF feed pipes (G), then install it with the filter end.

31. Install the 8 mm ATF pipe (H) in the intermediate housing.

32. Install the two dowel pins (I) and a new gasket (J) on the intermediate housing.

33. '06 model: Install new O-rings (K) on the top of the 10.9 x 46 mm ATF feed pipes (L).

34. Install new O-rings (M) on the ATF feed pipes (N), then install them on the manual valve body and the intermediate housing.

35. Install the end cover (O) (16 bolts).

(cont'd)

Transmission Reassembly (cont'd)

36. Turn the transmission end cover down.

37. Install the sealing ring (A) on a new secondary drive/park gear (B).

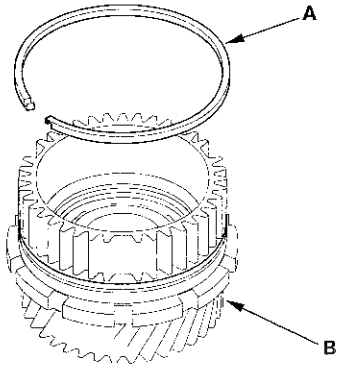

38. Install the park pawl (A), the pawl spring (B), and the pawl shaft (C) on the transmission housing, then move the control lever to any position other than P.

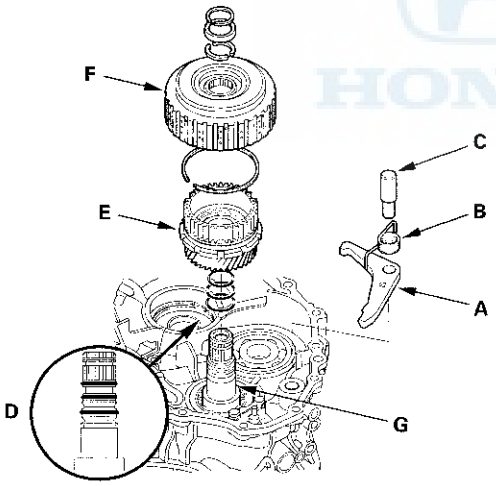

39. Wrap the driven pulley shaft splines to prevent O-ring damage, install new O-rings (D) in the shaft O-ring grooves, and remove the tape.

40. Install the secondary drive/park gear (E) in the start clutch (F), then install them on the driven pulley shaft (G).

41. Pull the handle (A) of the start clutch installer up, then install the tip of it into the driven pulley shaft feed pipe hole, and set the start clutch installer on the start clutch. Do not allow dirt or other particles to enter into the transmission.

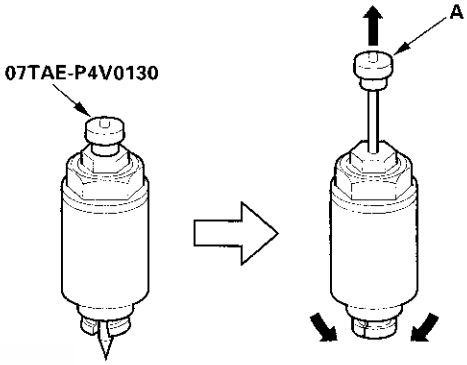

42. Push the handle (A) of the start clutch installer, then tighten the nut to seat the secondary drive/park gear on the drive pulley shaft.

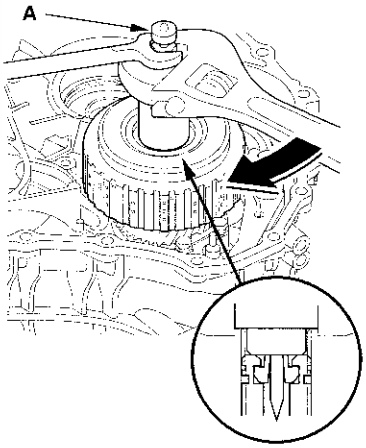

43. Pull the handle of the start clutch installer up, and remove the start clutch installer.

44. Install the 25.5 mm cotters (A) to the cotter groove on the driven pulley shaft, then measure the clearance between the cotters and the start clutch guide (B) using a feeler gauge (C). Take measurements in at least three places, and use the average as the actual clearance.

Standard: 0—0.13 mm (0—0.005 in.)

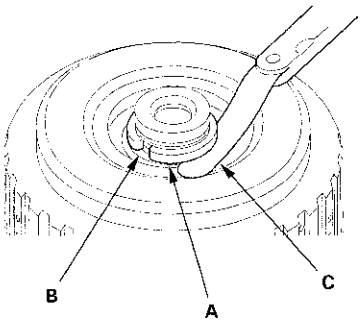

45. If the clearance is out of standard, remove the cotters, and measure its thickness.

46. Select and install new 25.5 mm cotters as a set, then recheck that the clearance is within the standard.

COTTERS, 25.5 mm

No.	Part Number	Thickness
A	90429-P4V-000	2.9 mm (0.114 in.)
B	90430-P4V-000	3.0 mm (0.118 in.)
C	90431-P4V-000	3.1 mm (0.122 in.)
D	90432-P4V-000	3.2 mm (0.126 in.)

47. Install the cotter retainer and the snap ring.

48. Check that the snap ring outside diameter (A) is 33.9 mm (1.33 in.) or less.

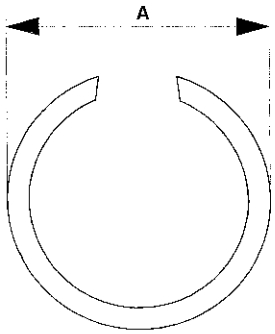

49. Install the thrust washer (A), the thrust needle bearing (B), the thrust washer (C), the ATF pump drive sprocket hub (D), and the 22 x 28 mm thrust shim (E) on the input shaft (F), and install the snap ring (G) to secure them.

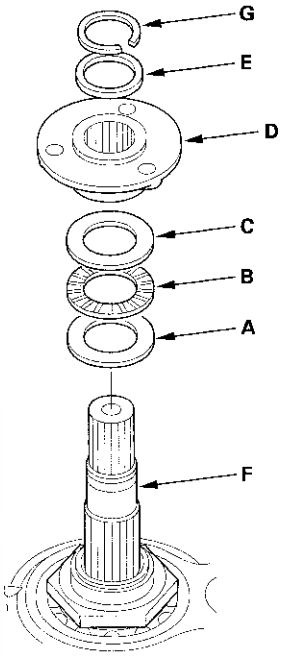

50. Check that the snap ring outside diameter (A) is 26.3 mm (1.04 in.) or less.

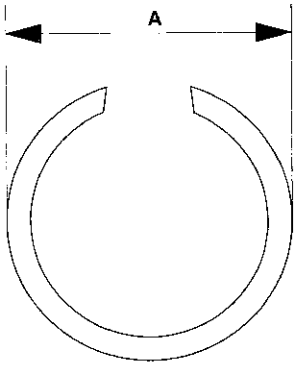

(cont'd)

Transmission Reassembly (cont'd)

51. Measure the clearance between the 22 x 28 mm thrust shim (A) and the snap ring (B) using a feeler gauge (C). Take measurements in at least three places, and use the average as the actual clearance.

    Standard: 0.37—0.65 mm (0.015—0.026 in.)

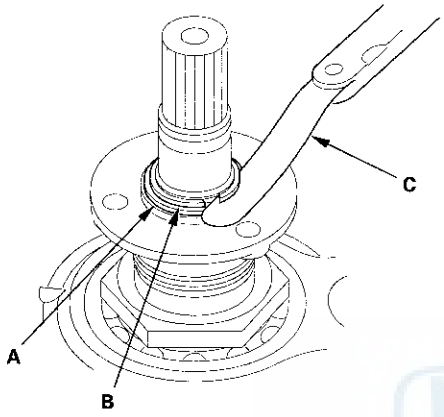

52. If the clearance is out of standard, remove the 22 x 28 mm thrust shim, and measure its thickness.

53. Select and install a new 22 x 28 thrust shim, then recheck that the clearance is within the standard.

THRUST SHIM, 22 x 28 mm

No.	Part Number	Thickness
C	90573-P4V-000	1.15 mm (0.045 in.)
D	90574-P4V-000	1.40 mm (0.055 in.)
E	90575-P4V-000	1.65 mm (0.065 in.)
F	90576-P4V-000	1.90 mm (0.075 in.)
G	90577-P4V-000	2.15 mm (0.085 in.)
H	90578-P4V-000	2.40 mm (0.094 in.)

54. If the 22 x 28 mm thrust shim is replaced, install the snap ring, and check that the snap ring outside diameter is within the tolerance.

55. Place the secondary driven gear (A) on the transmission housing by aligning it with the secondary drive gear, then install the final drive shaft (B) through the secondary driven gear into the transmission housing.

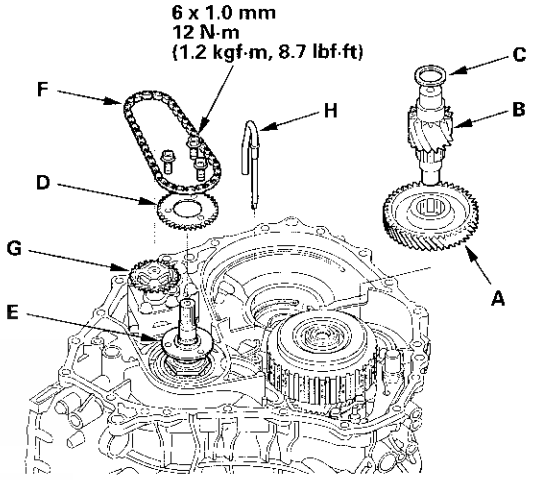

56. Install the 25 x 35 mm thrust shim (C) on the final drive shaft.

57. Position the ATF pump drive sprocket (D) on the sprocket hub (E), and put the ATF pump drive chain (F) on the ATF pump drive sprocket and the ATF pump driven sprocket (G), then secure the ATF pump drive sprocket with the three bolts.

58. Install the lubrication pipe (H).

59. Install the differential assembly (A).

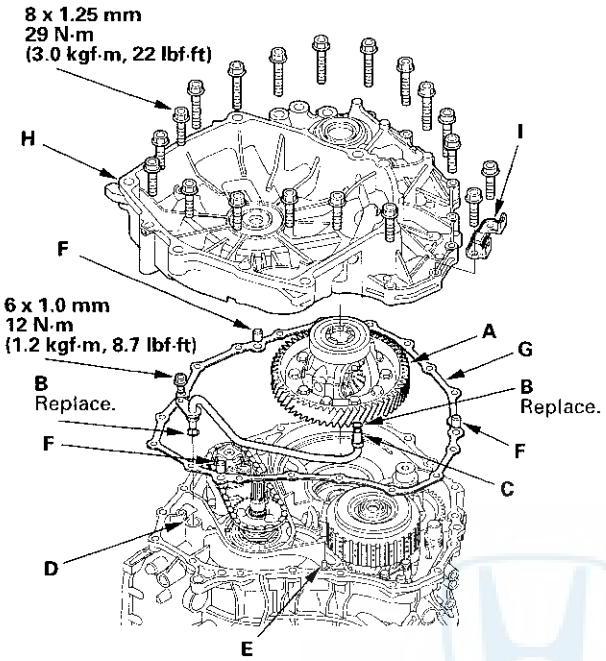

60. Install new O-rings (B) on both ends of the ATF passage pipe (C), then install the pipe in the pipe joint (D) of the transmission housing, and put the other end on the pipe guide (E).

61. Install the dowel pins (F) (three) and a new gasket (G) on the transmission housing.

62. Install the flywheel housing (H) on the transmission housing, and tighten the mounting bolts (19) with the harness clamp bracket (I).

63. Install a new O-ring (A) on the shift solenoid harness connector (B).

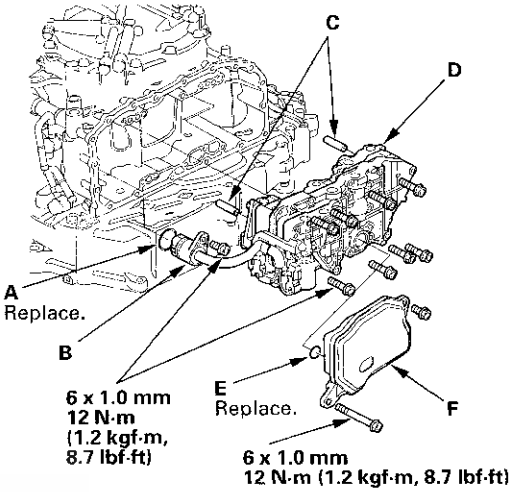

64. Install the ATF pipes (C) on the lower valve body (D), then install the shift solenoid harness connector and the lower valve body in the transmission housing.

65. Install a new O-ring (E) on the ATF strainer (F), then install the ATF strainer on the lower valve body.

66. Install the ATF pan (A) with the two dowel pins (B) and a new gasket (C).

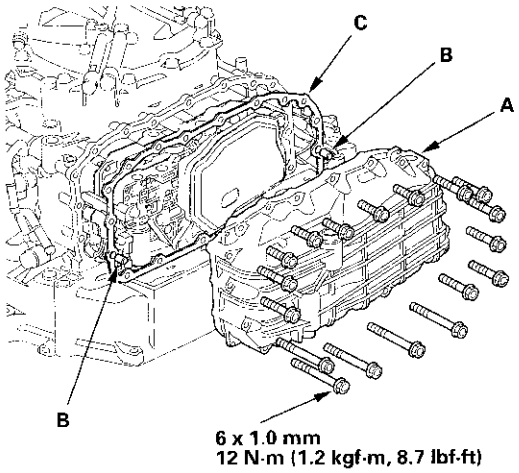

(cont'd)

Transmission Reassembly (cont'd)

67. Move the selector control lever (A) from the P position to the N position by turning the selector control lever (A).

    NOTE: Do not squeeze the end (B) of the selector control shaft tips together when turning. If the tips are squeezed together it will cause a faulty control signal or position due to the play between the selector control shaft and the transmission range switch.

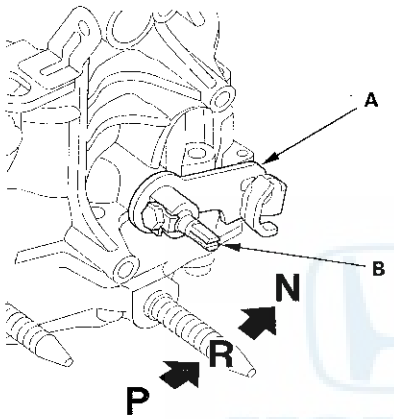

68. To set up a new transmission range switch (A) to the N position, align the cutouts (B) on the rotary-frame with the neutral positioning cutouts (C) on the transmission range switch. Then put a 2.0 mm (0.08 in.) feeler gauge blade (D) in the cutouts to hold the switch in the N position.

    NOTE: Be sure to use a 2.0 mm (0.08 in.) feeler gauge blade or equivalent to hold the transmission range switch in the N position.

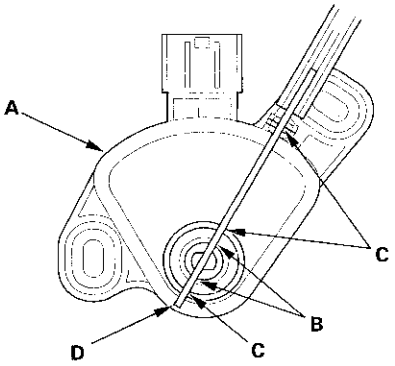

69. Install the transmission range switch (A) gently on the selector control shaft (B) while holding it in the N position with the 2.0 mm (0.08 in.) blade (C).

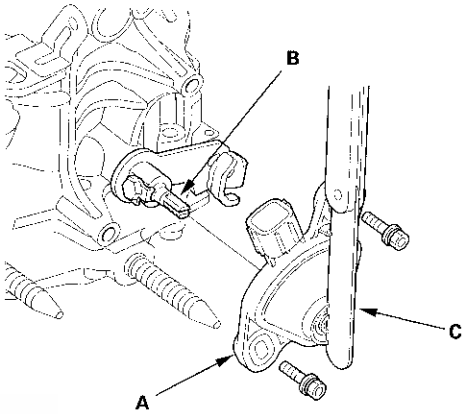

70. Tighten the bolts (A) on the transmission range switch while you continue to hold it in the N position. Do not move the transmission range switch when tightening the bolts. Remove the feeler gauge (B).

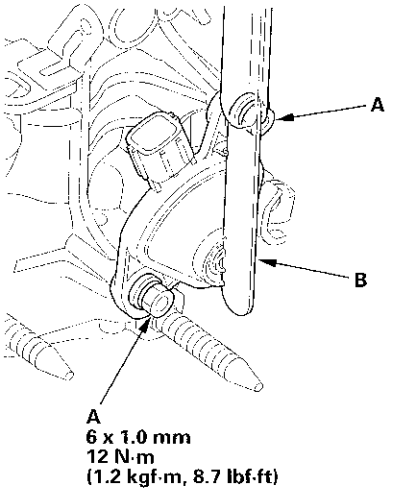

71. Install the control shaft cover on the transmission range switch.

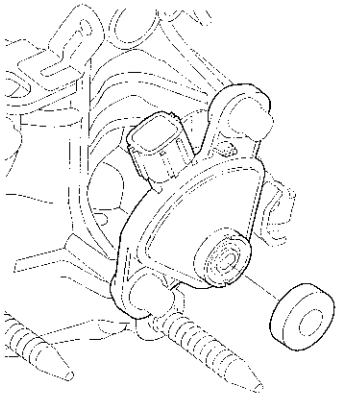

72. Install the breather cap (A) on the breather pipe (B) with its arrow (C) pointing to the flywheel housing.

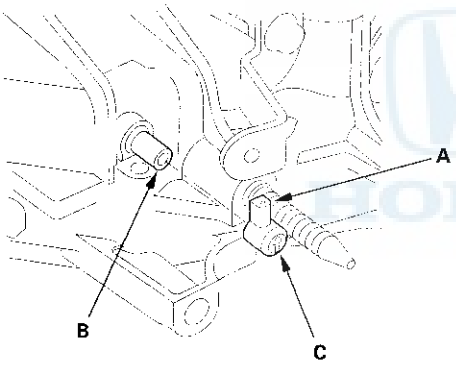

73. '06 model: Install the CVT output shaft (driven pulley) speed sensor (A), the CVT speed sensor (B), and the CVT speed sensor (secondary) (C) with new O-rings (D).

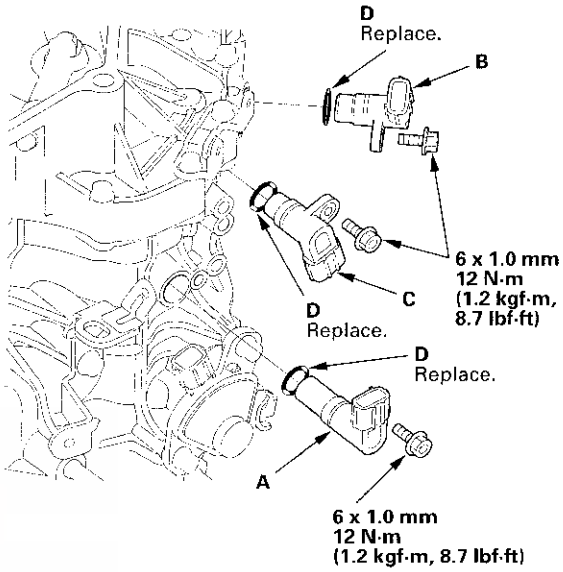

74. '07-09 models: Install the CVT output shaft (driven pulley) speed sensor (A), and the CVT speed sensor (B) with new O-rings (C).

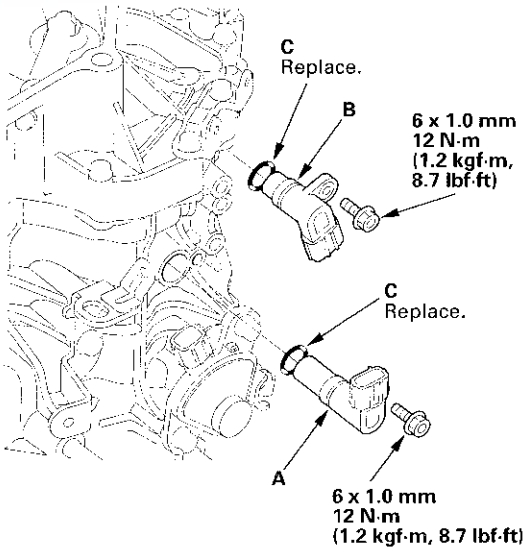

(cont'd)

Transmission Reassembly (cont'd)

75. Install the dipstick tube (A) with a new O-ring (B).

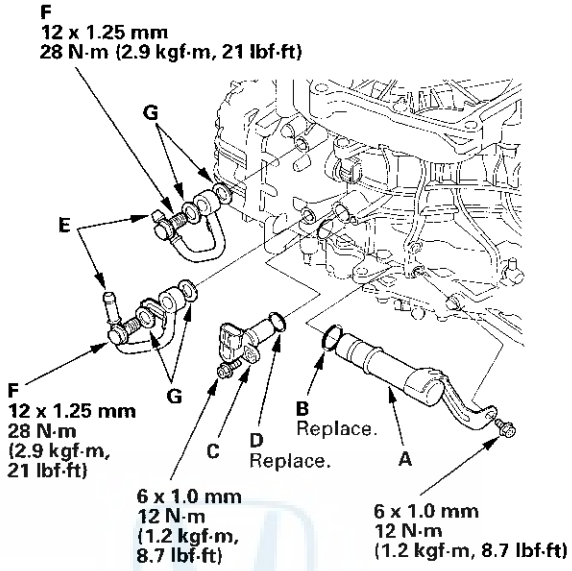

76. Install the CVT input shaft (drive pulley) speed sensor (C) with a new O-ring (D).

77. Install the ATF cooler lines (E) with the line bolts (F) and new sealing washers (G).

78. Install the CVTF dipstick in the tube.

Component Location Index

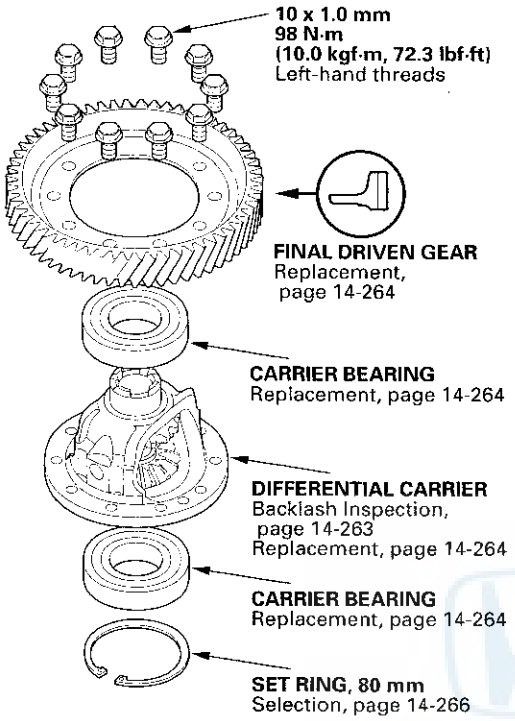

Backlash Inspection

1. Install the driveshaft and the intermediate shaft on the differential, then place the axles on V-blocks.
2. Check the backlash of the pinion gears (A) using a dial indicator (B).

   Standard: 0.05—0.15 mm (0.002—0.006 in.)

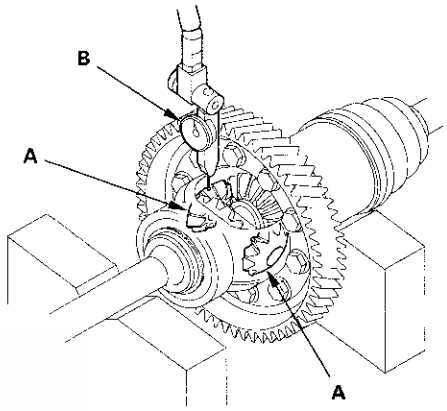

3. If the backlash is out of standard, replace the differential carrier.

Differential Carrier and Final Driven Gear Replacement

1. Remove the final driven gear from the differential carrier, and replace the differential carrier or the final driven gear. The final driven gear bolts have left-hand threads.

2. Install the final driven gear (A) in the direction shown on the differential carrier (B).

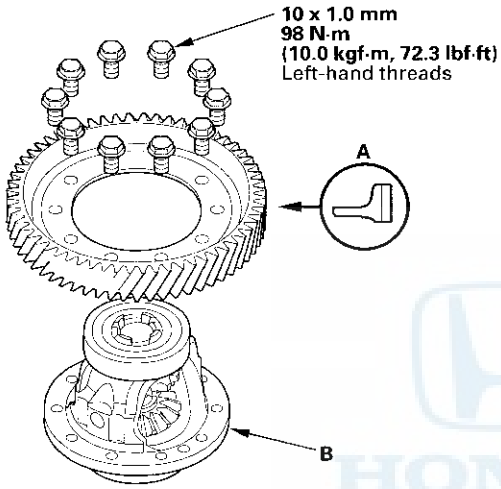

Carrier Bearing Replacement

Special Tools Required
Driver handle, 40 mm I.D. 07746-0030100

1. Remove the carrier bearing (A) using a commercially available puller (B) and a spacer (C).

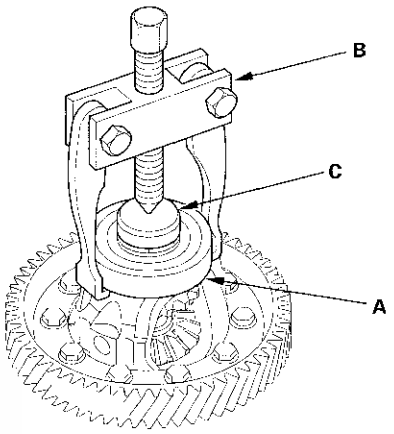

2. Install the bearing using the 40 mm driver handle, and a press. Press the bearing on until it bottoms.

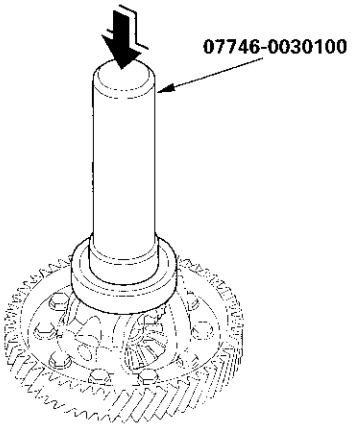

Oil Seal Replacement

Special Tools Required
- Driver attachment, 58 mm 07JAD-PH80101
- Driver attachment, 78 x 80 mm 07NAD-PX40100
- Driver handle 15 x 135L 07749-0010000

1. Remove the oil seal from the transmission housing.

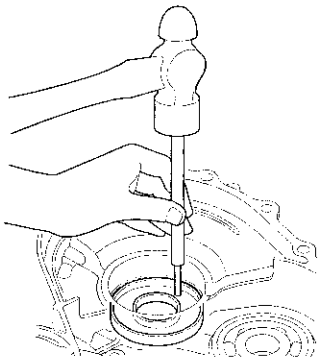

2. Remove the oil seal from the flywheel housing.

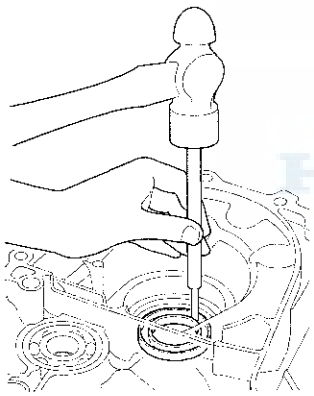

3. Install a new oil seal flush to the transmission housing using the driver handle and the 78 x 80 mm driver attachment.

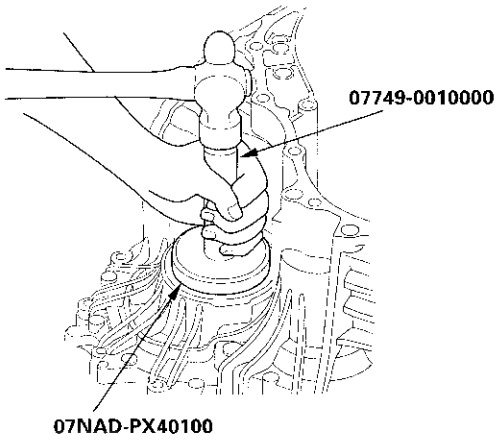

4. Install a new oil seal flush with the flywheel housing using the driver handle and the 58 mm driver attachment.

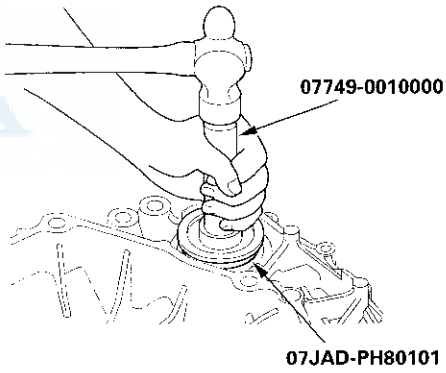

Carrier Bearing Side Clearance Inspection

Special Tools Required
Driver handle, 40 mm I.D. 07746-0030100

1. Install the set ring in the transmission housing.

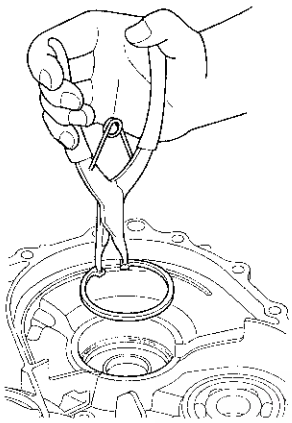

2. Install the differential assembly in the transmission housing, then drive the differential to seat in the housing using the 40 mm driver handle.

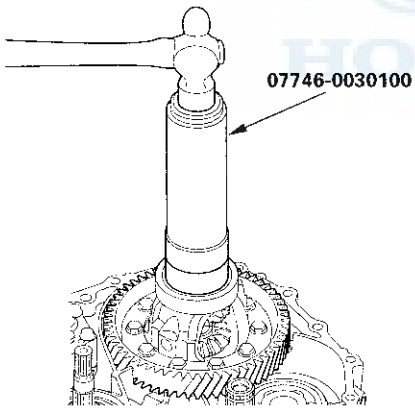

3. Install the three dowel pins (A) and new gasket (B) on the transmission housing (C).

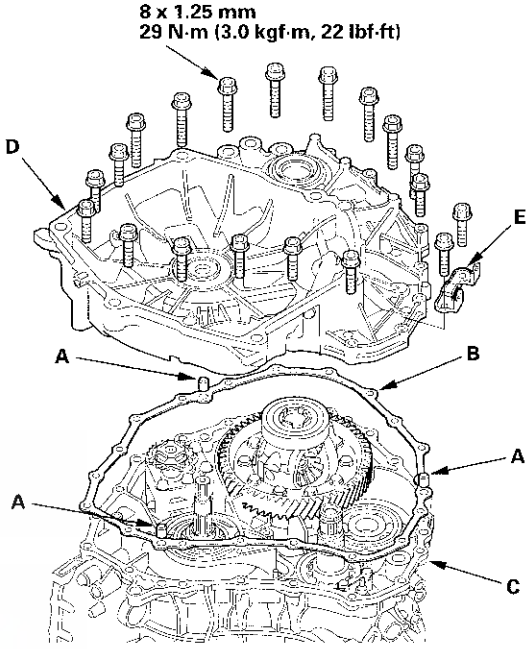

4. Place the flywheel housing (D) on the transmission housing.

5. Install the housing bolts with the harness clamp bracket (E), and tighten them in a crisscross pattern at least two steps.

6. Measure the clearance between the set ring and the carrier bearing outer race using a feeler gauge.

   Standard: 0—0.15 mm (0—0.006 in.)

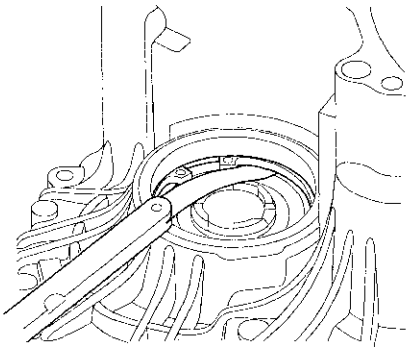

7. If the clearance is out of standard, remove the set ring, and measure its thickness.

8. Select a new set ring from the following table.

SET RING, 80 mm

No.	Part Number	Thickness
1	90414-689-000	2.5 mm (0.098 in.)
2	90415-689-000	2.6 mm (0.102 in.)
3	90416-689-000	2.7 mm (0.106 in.)
4	90417-689-000	2.8 mm (0.110 in.)
5	90418-689-000	2.9 mm (0.114 in.)
6	90419-PH8-000	3.0 mm (0.118 in.)

9. Install a new set ring, and recheck the clearance and make sure it is within the standard.

Driveline/Axle

Driveline/Axle

Special Tools 16-2
Component Location Index 16-3
Driveshaft Inspection 16-4
Driveshaft Removal 16-4
Driveshaft Disassembly 16-7
Dynamic Damper Replacement 16-10
Driveshaft Reassembly 16-11
Driveshaft Installation 16-20
Intermediate Shaft Removal 16-22
Intermediate Shaft Disassembly 16-23
Intermediate Shaft Reassembly 16-25
Intermediate Shaft Installation 16-28

Special Tools

Ref. No.	Tool Number	Description	Qty
①	07GAD-PH70201	Oil Seal Driver, 64 mm	1
②	07JAF-SH20400	Support Base Attachment	1
③	07XAC-001010A	Threaded Adapter, 22 x 1.5 mm	1
④	07746-0010400	Bearing Driver Attachment, 52 x 55 mm	1
⑤	07746-0030400	Inner Bearing Driver Attachment, 35 mm	1
⑥	07749-0010000	Driver Handle, 15 x 135L	1
⑦	07947-SB00100	Oil Seal Driver, 44.5 mm	1
⑧	07965-SD90100	Support Base	1

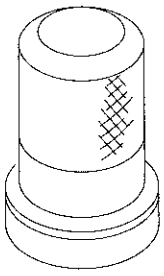
①

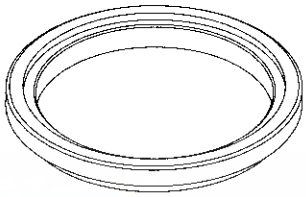
②

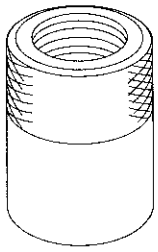
③

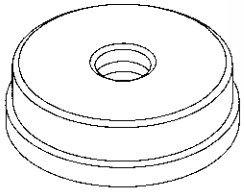
④

⑤

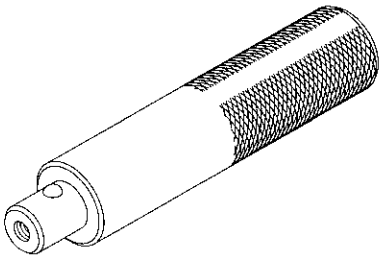
⑥

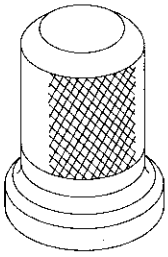
⑦

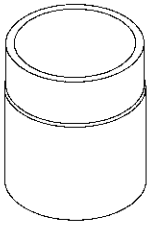
⑧

Component Location Index

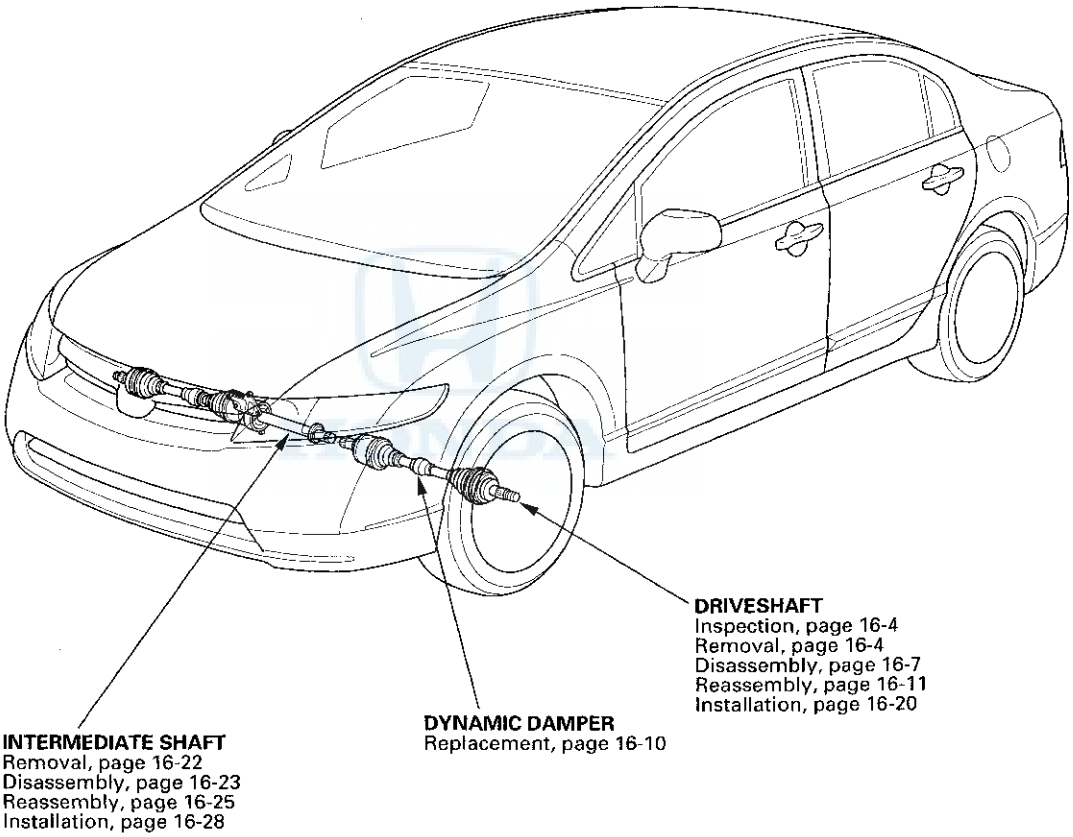

Driveshaft Inspection

1. Check the inboard boot (A) and the outboard boot (B) on the driveshaft (C) for cracks, damage, leaking grease, and loose boot bands (D). If any damage is found, replace the boot and the boot bands.

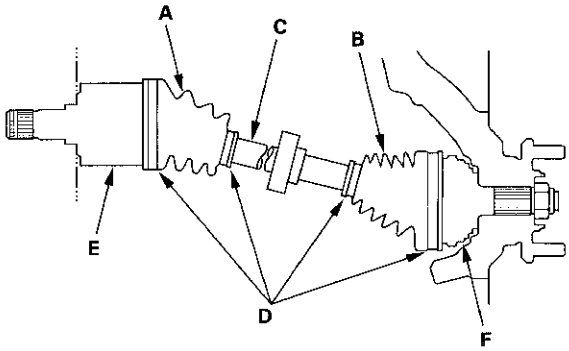

2. Check the driveshaft for cracks and damage. If any damage is found, replace the driveshaft.

3. Check the inboard joint (E) and the outboard joint (F) for cracks and damage. If any damage is found, replace the inboard joint or the outboard joint as an assembly.

4. Hold the inboard joint and turn the front wheel by hand, then make sure the joint is not excessively loose. If necessary, replace the inboard joint or the outboard joint as an assembly.

Driveshaft Removal

1. Raise the vehicle on a lift.

2. Remove the front wheels.

3. Pry up the locking tab (A) on the spindle nut (B), then remove the nut.

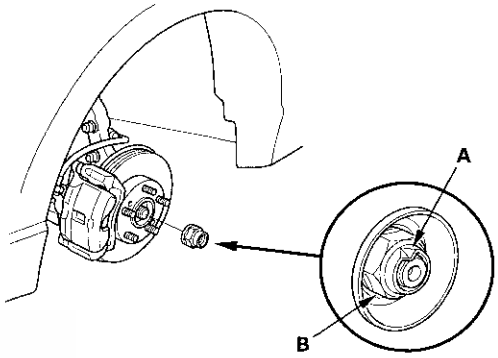

4. Drain the transmission fluid, then reinstall the drain plug with a new sealing washer (see page 14-176).

5. Remove the nuts and the bolt, then separate the lower arm using a prybar.

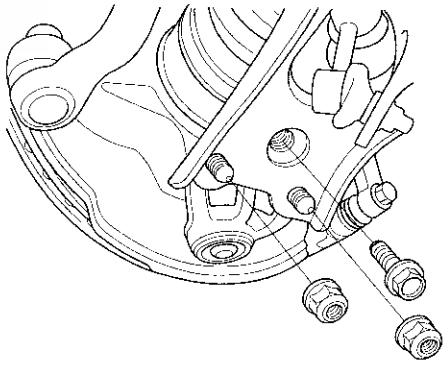

6. Separate the driveshaft outboard joint from the front hub using a plastic hammer.

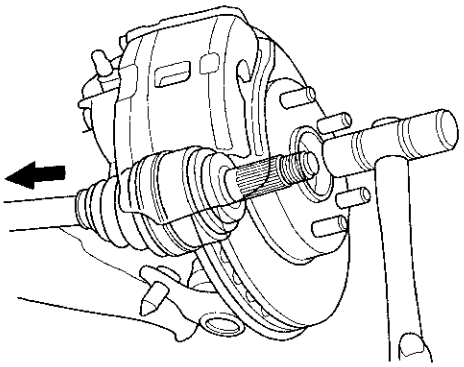

7. Pull the knuckle outward, and separate the driveshaft outboard joint from the front hub.

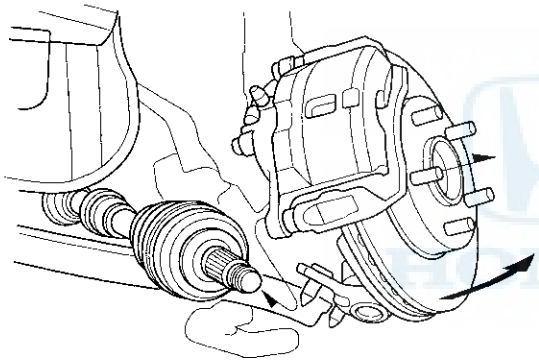

8. Left driveshaft: Pry the inboard joint (A) from the differential using a prybar. Remove the driveshaft as an assembly.

   NOTE:
   - Do not pull on the driveshaft (B), or the inboard joint may come apart. Pull the inboard joint straight out to avoid damaging the oil seal.
   - Be careful not to damage the oil seal using the prybar.

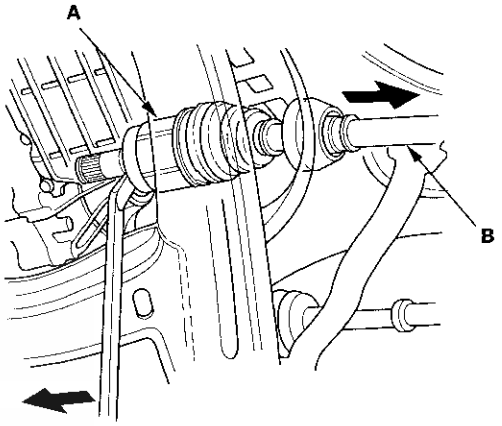

(cont'd)

Driveshaft Removal (cont'd)

9. Right driveshaft: Drive the inboard joint (A) off of the intermediate shaft using a drift and a hammer. Remove the driveshaft as an assembly.

   NOTE:
   - Do not pull on the driveshaft (B), or the inboard joint may come apart. Pull the inboard joint straight out to avoid damaging the oil seal.
   - Be careful not to damage the oil seal using the prybar.

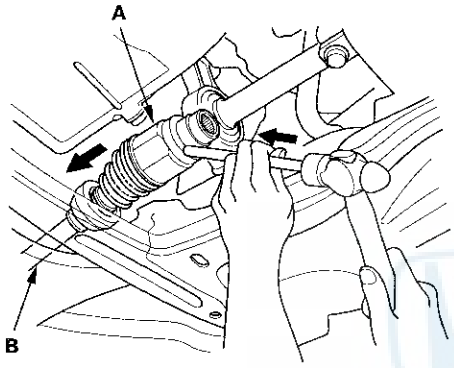

10. Remove the set ring (A) from the left driveshaft inboard joint.

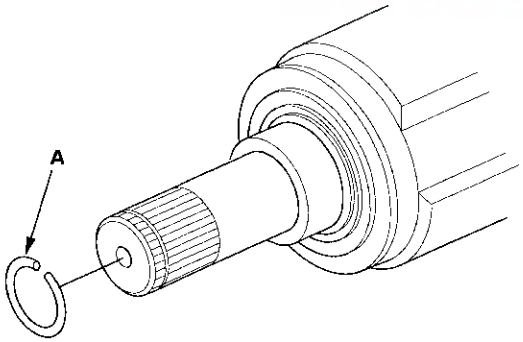

11. Remove the set ring (A) from the intermediate shaft.

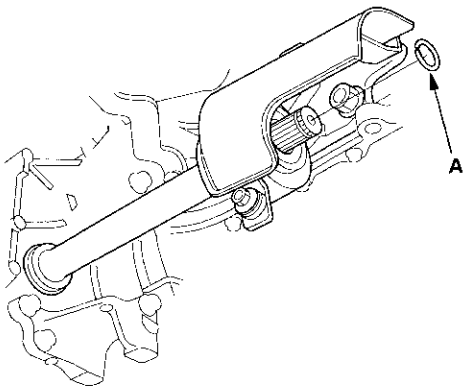

Driveshaft Disassembly

Special Tools Required
- Threaded adapter, 22 x 1.5 mm 07XAC-001010A
- Slide hammer, 5/8"-18 UNF, commercially available
- Boot band pliers, commercially available
- Puller, commercially available

Inboard Joint Side

1. Remove the boot bands. Be careful not to damage the boot.

   - If the boot band is a welded type (A), cut the boot band.
   - If the boot band is a double loop type (B), lift up the band end (C), and push it into the clip (D).
   - If the boot band is a low profile type (E), pinch the boot band using commercially available boot band pliers (F).

Welded type

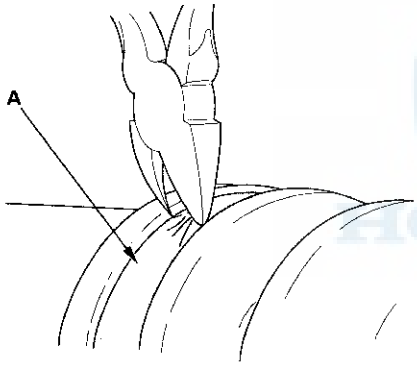

Double loop type

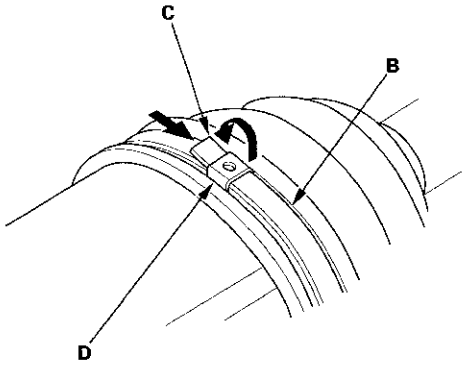

Low profile type

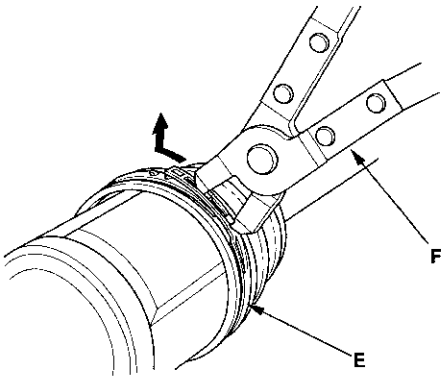

2. Make marks (A) on each roller (B) and the inboard joint (C) to identify the locations of the rollers to the grooves in the inboard joint. Then remove the inboard joint on a clean shop towel (D). Be careful not to drop the rollers when separating them from the inboard joint.

   NOTE: Do not engrave or scribe any marks on the rolling surface.

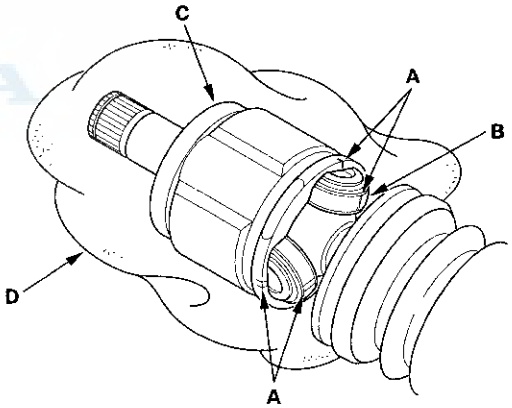

(cont'd)

Driveshaft Disassembly (cont'd)

3. Make marks (A) on the rollers (B) and the spider (C) to identify the locations of the rollers on the spider, then remove the rollers.

   NOTE: Do not engrave or scribe any marks on the rolling surfaces.

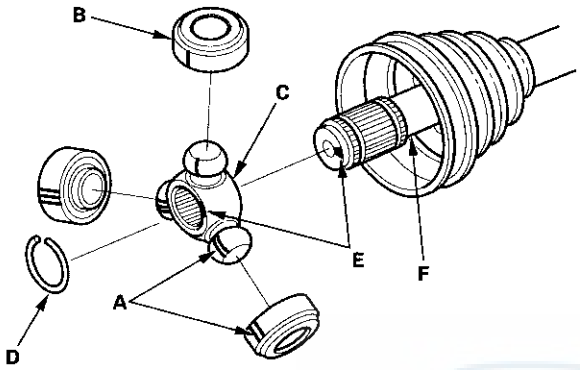

4. Remove the circlip (D).

5. Make marks (E) on the spider and the driveshaft (F) to identify the position of the spider on the shaft.

6. Remove the spider.

   NOTE: If necessary, use a commercially available puller.

7. Wrap the splines on the driveshaft with vinyl tape (A) to prevent damaging the boot.

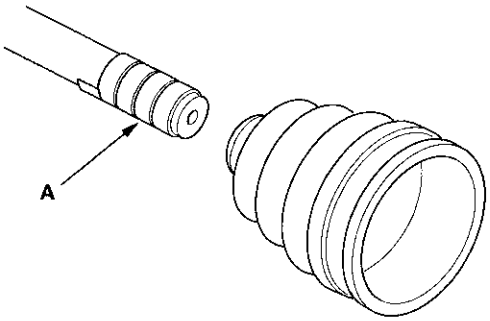

8. Remove the inboard boot. Be careful not to damage the boot.

9. Remove the vinyl tape.

Outboard Joint Side

1. Remove the boot bands (A). Lift up the three tabs (B) using a screwdriver, then release the band. Be careful not to damage the boot.

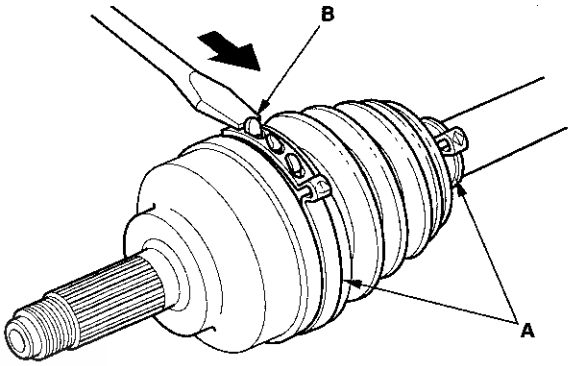

2. Slide the outboard boot (A) partially to the inboard joint side. Be careful not to damage the boot.

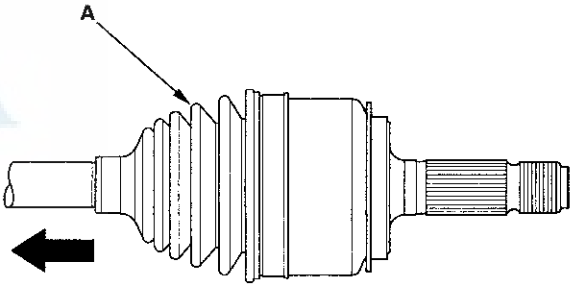

3. Wipe off the grease to expose the driveshaft and the outboard joint inner race.

4. Make a mark (A) on the driveshaft (B) at the same level as the outboard joint end (C).

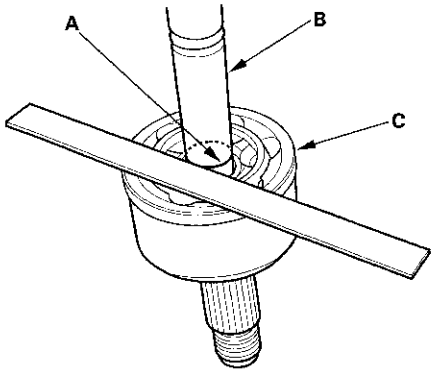

5. Securely clamp the driveshaft in a bench vise with a shop towel.

6. Remove the outboard joint (A) using the 22 x 1.5 mm threaded adapter (B) and a commercially available 5/8"-18 UNF slide hammer (C).

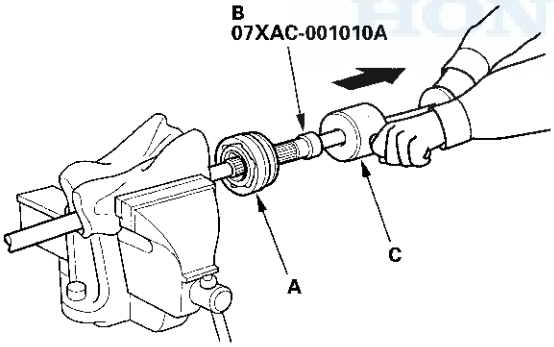

7. Remove the driveshaft from the bench vise.

8. Remove the stop ring from the driveshaft.

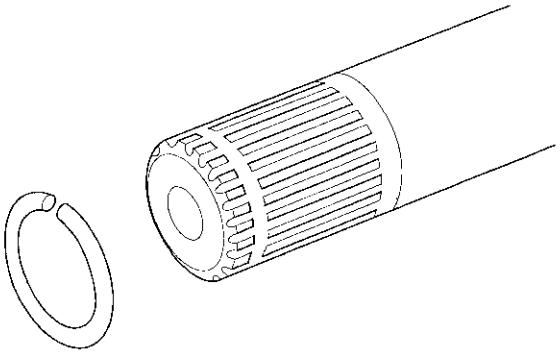

9. Wrap the splines on the driveshaft with vinyl tape (A) to prevent damaging the boot.

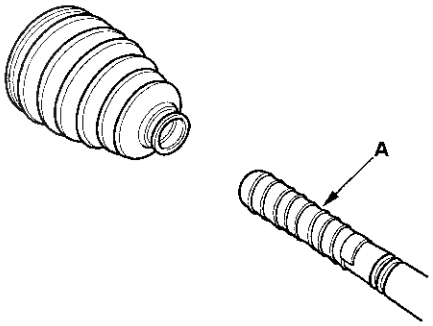

10. Remove the outboard boot. Be careful not to damage the boot.

11. Remove the vinyl tape.

Dynamic Damper Replacement

1. Remove the inboard joint (see page 16-7).

2. Remove the dynamic damper band (see step 1 on page 16-7).

3. Remove the dynamic damper (A).

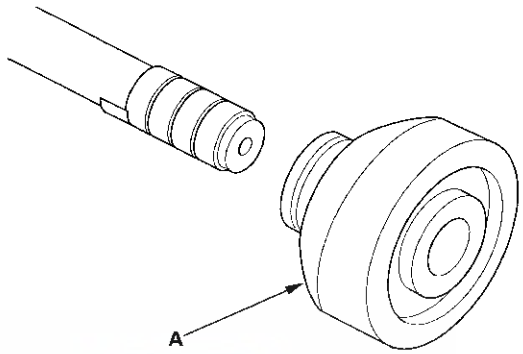

4. Install new dynamic damper, and adjust the distance (A) as shown.

   NOTE:
   - Install the dynamic damper that has "SNC-003" mark (B) to the left driveshaft.
   - Install the dynamic damper that has "SNC-901" mark to the right driveshaft.

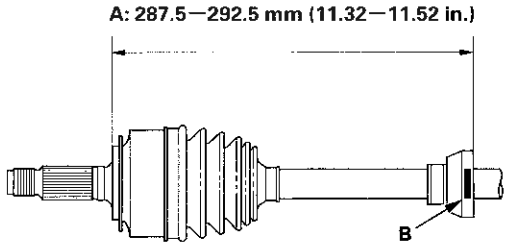

5. Install the dynamic damper band (see step 11 on page 16-14).

6. Install the inboard joint (see page 16-12).

Driveshaft Reassembly

Exploded View

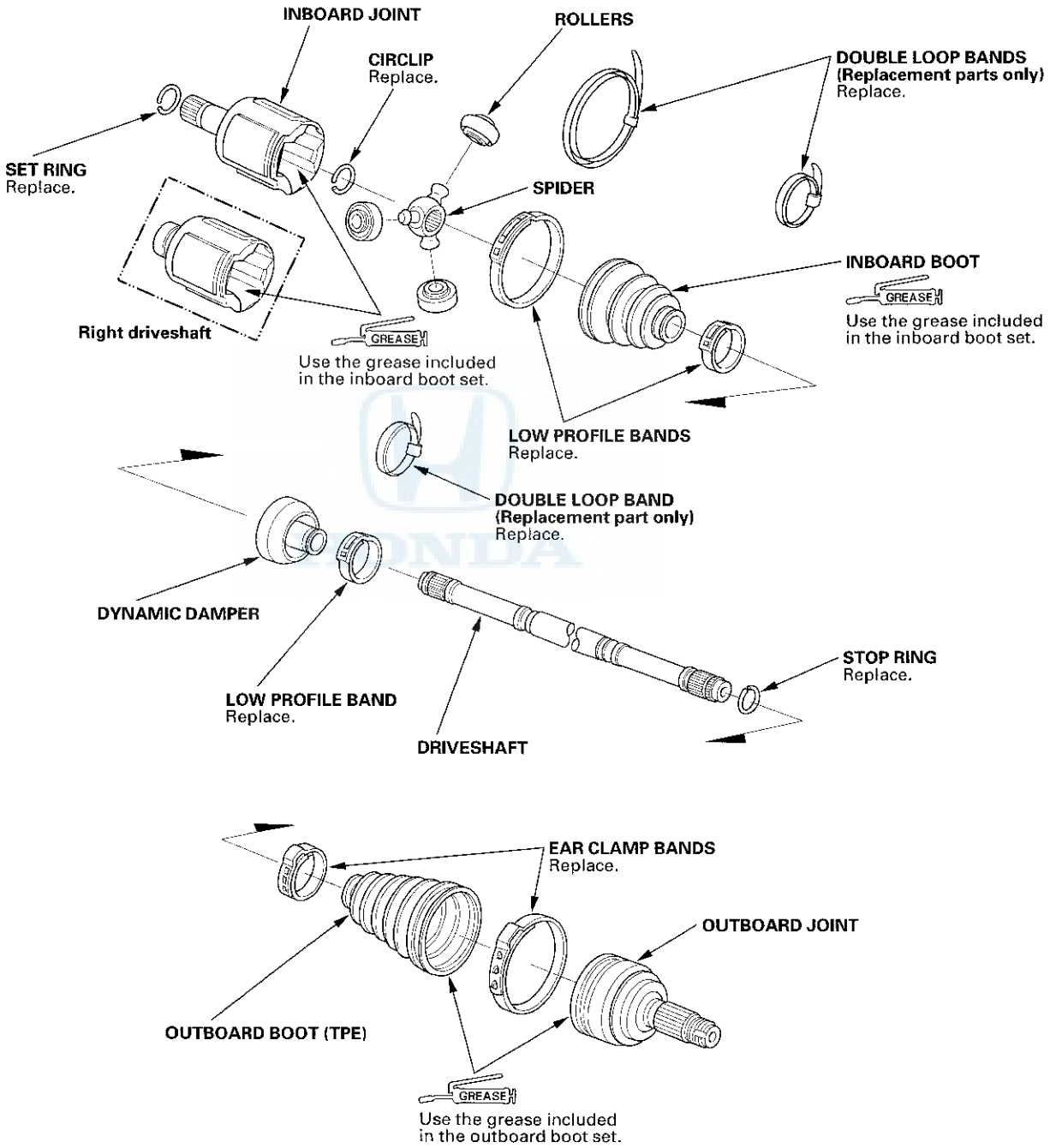

(cont'd)

Driveshaft Reassembly (cont'd)

Special Tools Required
- Boot band tool, KD-3191 or equivalent, commercially available
- Boot band pliers, Kent-Moore J-35910 or equivalent, commercially available

NOTE: Refer to the Exploded View, as needed, during this procedure.

Inboard Joint Side

1. Wrap the splines with vinyl tape (A) to prevent damaging the inboard boot.

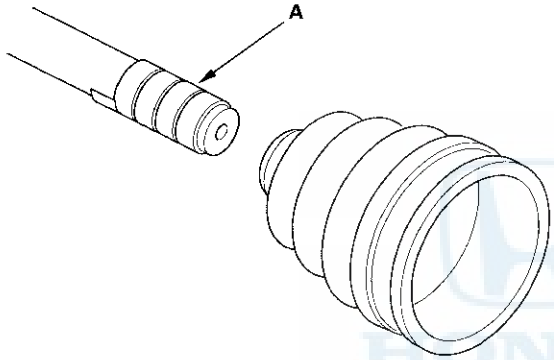

2. Install the inboard boot onto the driveshaft, then remove the vinyl tape. Be careful not to damage the inboard boot.

3. Install the spider (A) onto the driveshaft by aligning the marks (B) you made on the spider and the end of the driveshaft.

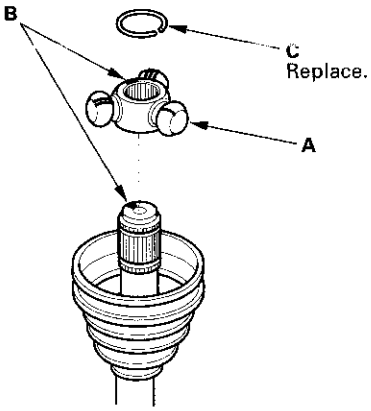

4. Install a new circlip (C) into the driveshaft groove. Always rotate the circlip in its groove to make sure it is fully seated.

5. Fit the rollers (A) onto the spider (B) with the high shoulders (C) facing outward, and note these items:
   - Reinstall the rollers in their original positions on the spider by aligning the marks (D) you made.
   - Hold the driveshaft pointed up to prevent the rollers from falling off.

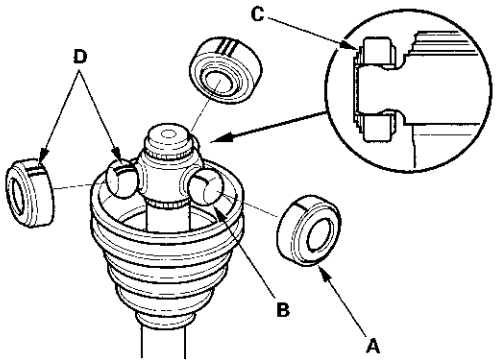

6. Pack the inboard joint with the joint grease included in the new inboard boot set.

Grease quantity
Inboard joint
'06-08 models: 100—110 g (3.5—3.9 oz)
'09 model: 90—100 g (3.2—3.5 oz)

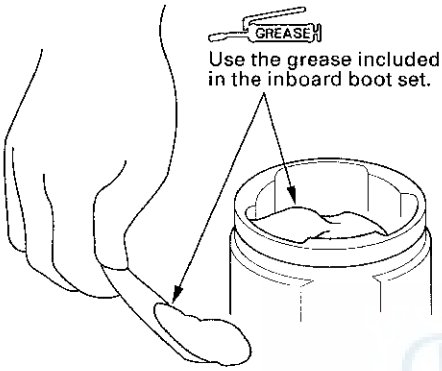

7. Fit the inboard joint onto the driveshaft and note these items:

- Reinstall the inboard joint onto the driveshaft by aligning the marks (A) you made on the inboard joint and the rollers.
- Hold the driveshaft so the inboard joint is pointing up to prevent it from falling off.

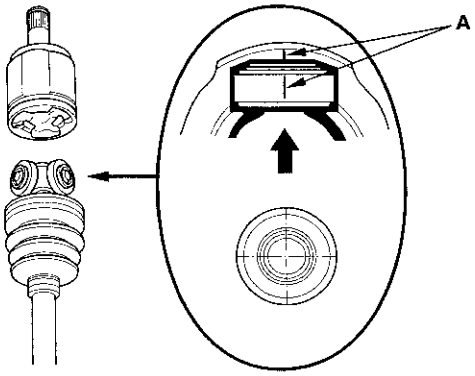

8. Fit the boot ends (A) onto the driveshaft (B) and the inboard joint (C).

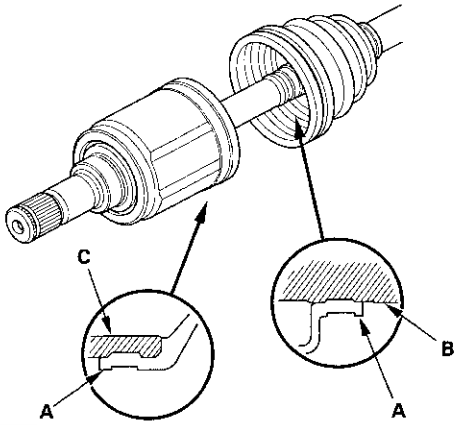

(cont'd)

Driveshaft Reassembly (cont'd)

9. Adjust the length (A) of the driveshafts to the figure as shown, then adjust the boots to halfway between full compression and full extension. Bleed excess air from the boots by inserting a flat-tipped screwdriver between the boot and the joint.

Left driveshaft

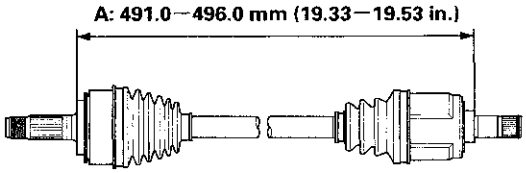

Right driveshaft

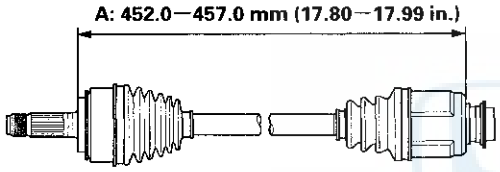

10. Install new boot bands.

- For the double loop type, go to step 11.
- For the low profile type, go to step 20.

11. Fit the boot ends onto the driveshaft and the inboard joint, then install a new double loop band (A) onto the boot (B).

NOTE: Pass the end of the new double loop band through the clip (C) twice in the direction of the forward rotation of the driveshaft.

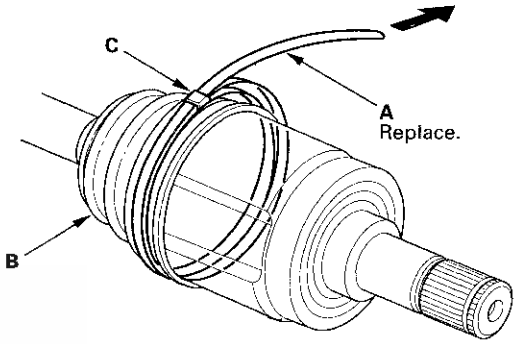

12. Pull up the slack in the band by hand.

13. Mark a position (A) on the band 10—14 mm (0.4—0.6 in.) from the clip (B).

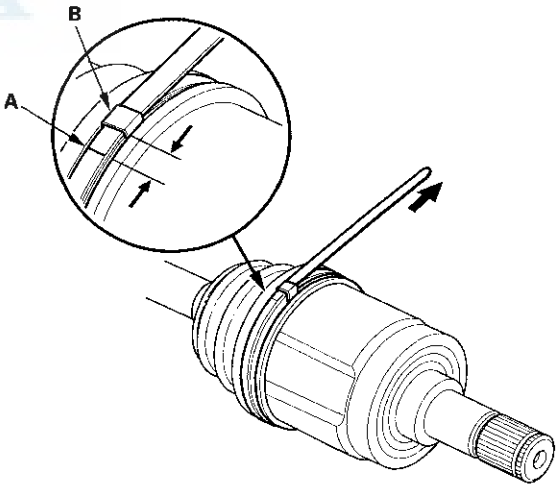

14. Thread the free end of the band through the nose section of the commercially available boot band tool KD-3191 or equivalent (A), and into the slot on the winding mandrel (B).

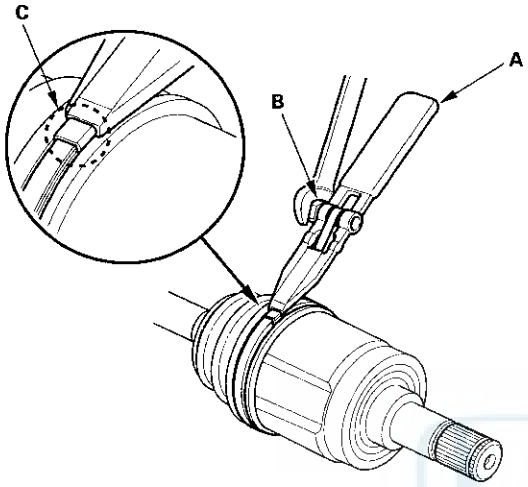

15. Using a wrench on the winding mandrel of the boot band tool, tighten the band until the marked spot (C) on the band meets the edge of the clip.

16. Lift up the boot band tool to bend the free end of the band 90 degrees to the clip. Center-punch the clip, then fold over the remaining tail onto the clip.

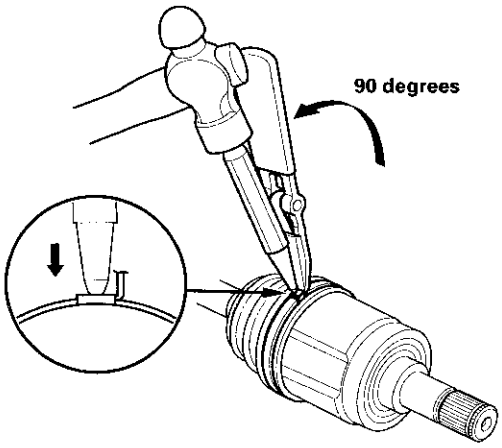

17. Unwind the boot band tool, and cut off the excess free end of the band to leave a 5—10 mm (0.2—0.4 in.) tail protruding from the clip.

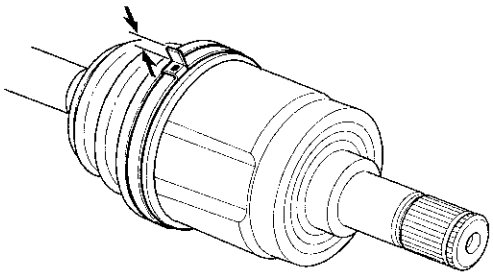

18. Bend the band end (A) by tapping it down using a hammer.

NOTE:
- Make sure the band and the clip do not interfere with anything on the vehicle and the band does not move.
- Clean any grease remaining on the surrounding surfaces.

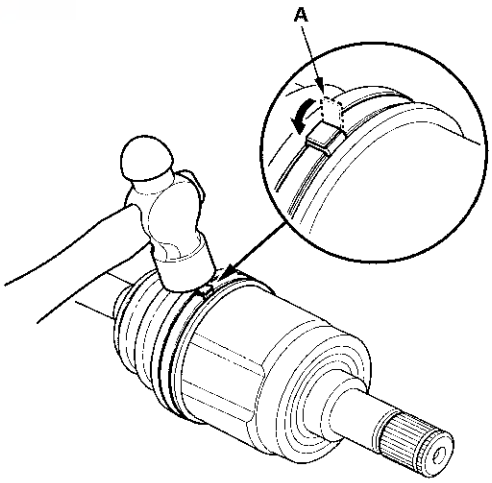

19. Repeat steps 11 through 18 for the band on the other end of the boot.

(cont'd)

Driveshaft Reassembly (cont'd)

20. Install a new low profile band (A) onto the boot (B), then hook the tab (C) of the band.

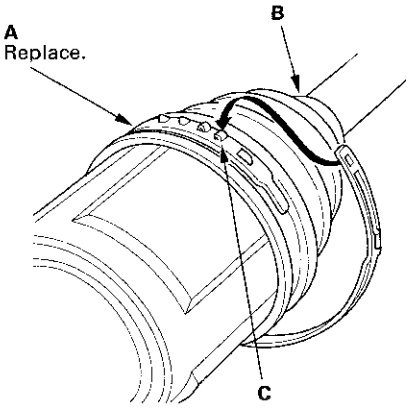

21. Close the hook portion of the band using commercially available boot band pliers (A), then hook the tabs (B) of the band.

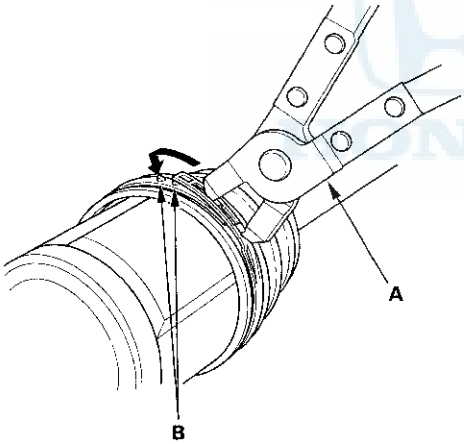

22. Install the boot band on the other end of the boot, and repeat steps 20 and 21.

Outboard Joint Side

1. Wrap the splines with vinyl tape (A) to prevent damaging the outboard boot.

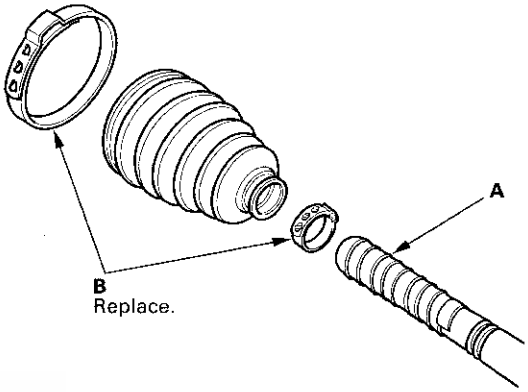

2. Install the new ear clamp bands (B) and the outboard boot, then remove the vinyl tape. Be careful not to damage the outboard boot.

3. Make sure to check the size of a new stop ring.

NOTICE
To avoid driveshaft and vehicle damage, make sure you install a new stop ring.

Stop Ring Specifications
Overall Diameter (A): 24.5 mm (0.96 in.)
Wire Diameter (B): 2.0 mm (0.08 in.)

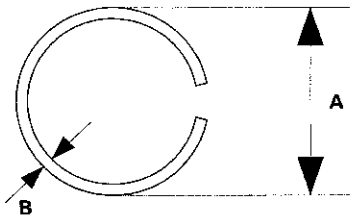

4. Install the stop ring (A) into the driveshaft groove (B).

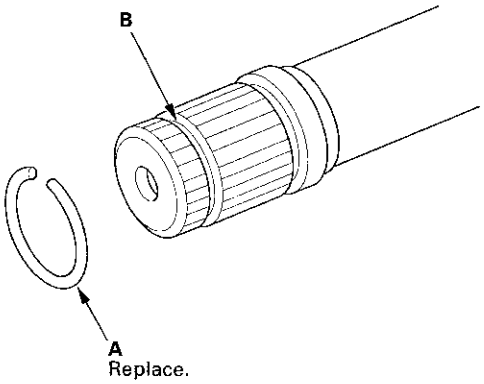

5. Pack about 35 g (1.2 oz) grease included in the new outboard boot set into the driveshaft hole in the outboard joint.

   NOTE: If you are installing a new outboard joint, the grease is already installed.

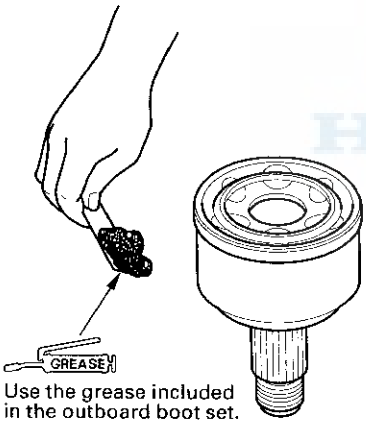

6. Insert the driveshaft (A) into the outboard joint (B) until the stop ring (C) is close to the joint.

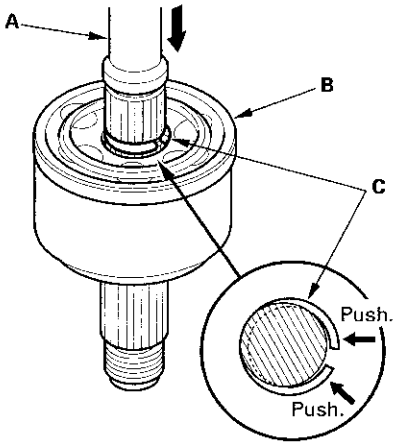

7. To completely seat the outboard joint, pick up the driveshaft and the joint, and tap or hit the assembly onto a hard surface from a height of about 10 cm (4 in.).

   NOTE: Do not use a hammer as excessive force may damage the driveshaft. Be careful not to damage the threaded section (A) of the outboard joint.

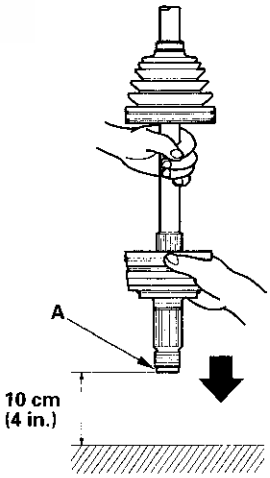

(cont'd)

Driveshaft Reassembly (cont'd)

8. Check the alignment of the paint mark (A) you made with the outboard joint end (B).

NOTICE
To avoid driveshaft and vehicle damage, the shaft must be all the way into the outboard joint to ensure the stop ring is properly seated.

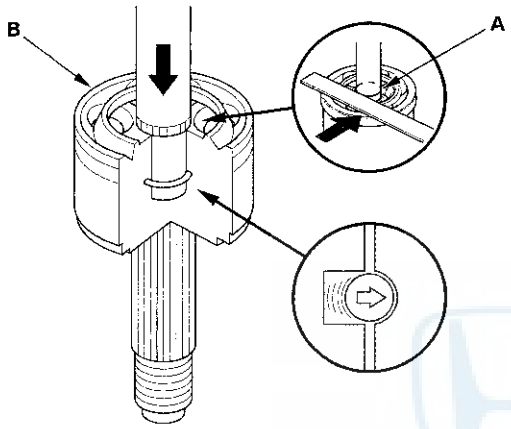

9. Pack the outboard joint (A) with the remaining joint grease included in the new outboard boot set.

Total grease quantity
Outboard joint: 95—105 g (3.4—3.7 oz)

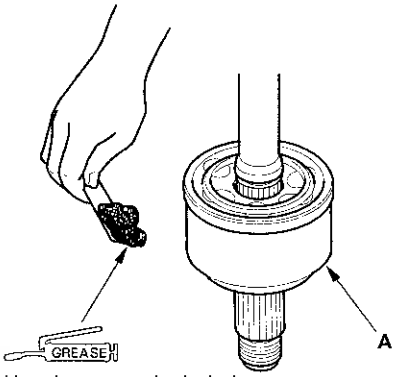

Use the grease included in the outboard boot set.

10. Fit the boot ends (A) onto the driveshaft (B) and the outboard joint (C). Bleed any excess air from the boot by inserting a flat-tipped screwdriver between the boot and the joint.

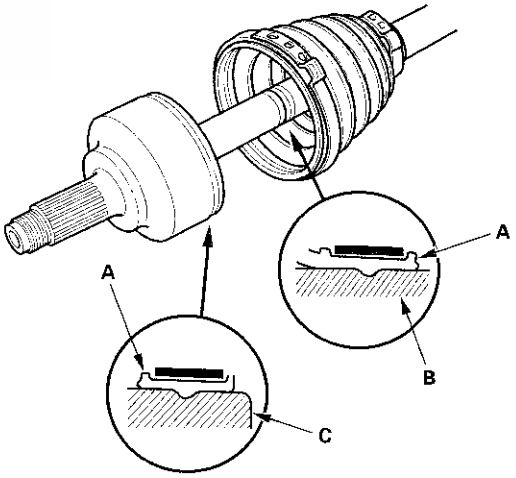

11. Inspect the length (A) of the driveshafts to the figure as shown, then adjust the boots to halfway between full compression and full extension.

Left driveshaft

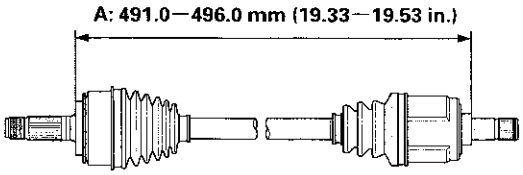

Right driveshaft

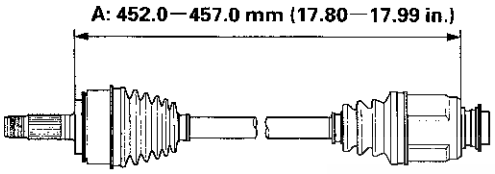

12. Close the ear portion (A) of the band using commercially available boot band pliers (Kent-Moore J-35910 or equivalent) (B).

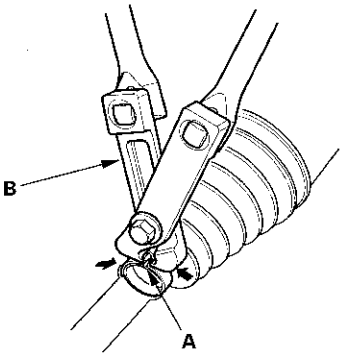

13. Check the clearance between the closed ear portion of the band. If the clearance is not within the standard, close the ear portion of the band tighter.

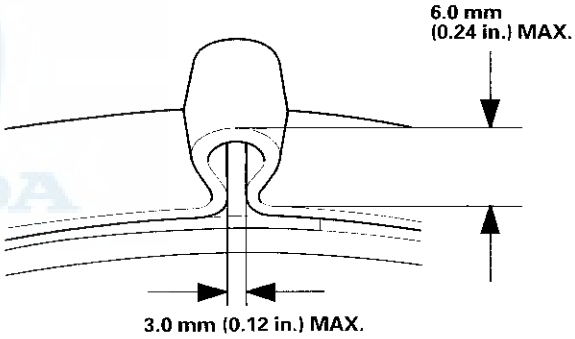

14. Repeat steps 12 and 13 for the band on the other end of the boot.

Driveshaft Installation

NOTE: Before starting installation, make sure the mating surfaces of the joint and the splined section are clean.

1. Apply about 5 g (0.18 oz) moly 60 paste (P/N 08734-0001) to the contact area (A) of the outboard joint and the front wheel bearing.

   NOTE: The paste helps to prevent noise and vibration.

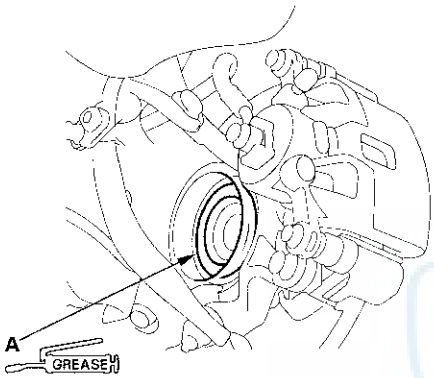

2. Install a new set ring (A) into the set ring groove (B) of the left driveshaft inboard joint.

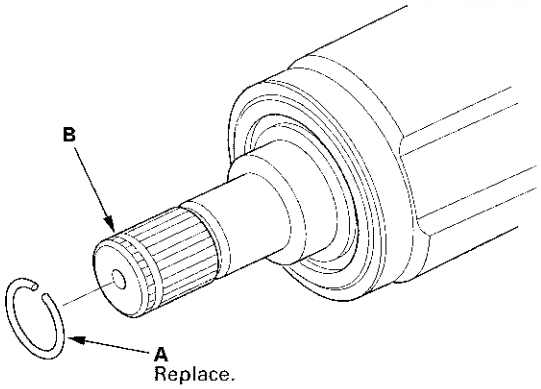

3. Install a new set ring (A) into the set ring groove (B) of the intermediate shaft.

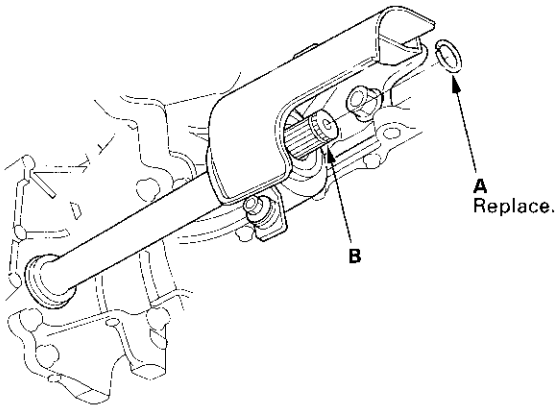

4. Apply 0.5—1.0 g (0.02—0.04 oz) of super high temp urea grease (P/N 08798-9002) to the whole splined surface (A) of the right driveshaft. After applying grease, remove the grease from the splined grooves at intervals of 2—3 splines and from the set ring groove (B) so that air can bleed from the intermediate shaft.

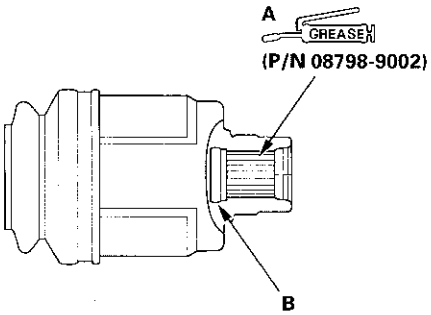

5. Clean the areas where the driveshaft contacts the differential thoroughly with solvent or brake cleaner, and dry with compressed air.

   NOTE: Do not wash the rubber parts with solvent.

6. Insert the inboard end (A) of the driveshaft into the differential (B) or the intermediate shaft (C) until the set ring (D) locks in the groove (E).

   NOTE: Insert the driveshaft horizontally to prevent damaging the oil seal.

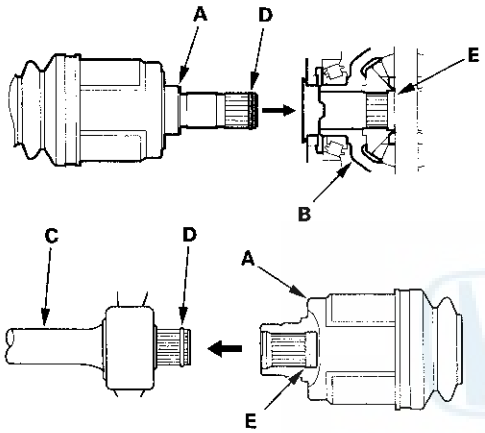

7. Install the outboard joint (A) into the front hub (B).

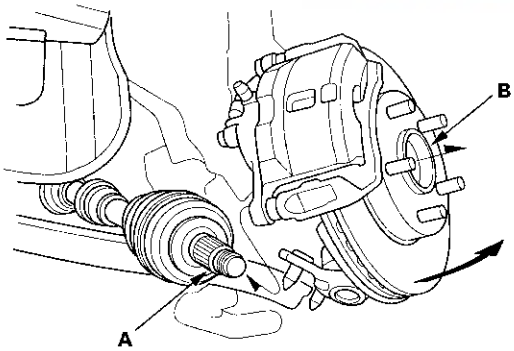

8. Connect the knuckle (A) onto the lower arm (B). During installation, install a new flange bolt and new self-locking nuts. After lightly tightening all three fasteners, tighten them to the specified torque in the following order: the nut on the front (C), the nut on the rear (D), then the bolt (E).

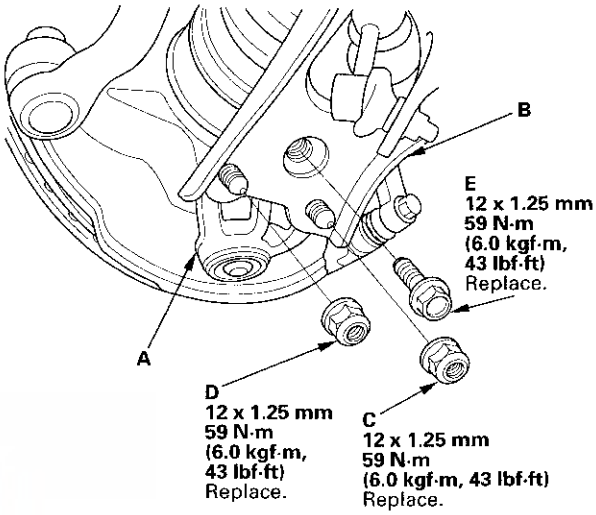

9. Apply small amount of engine oil to the seating surface of a new spindle nut (A).

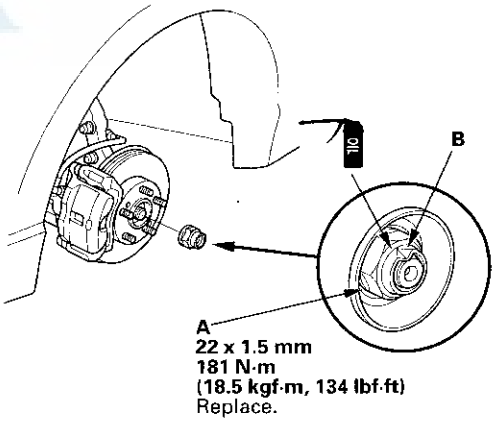

10. Install the spindle nut, then tighten it. After tightening, use a drift to stake the spindle nut shoulder (B) against the driveshaft.

(cont'd)

Driveshaft Installation (cont'd)

11. Clean the mating surfaces of the brake discs and the front wheels, then install the front wheels.
12. Turn the front wheels by hand, and make sure there is no interference between the driveshaft and surrounding parts.
13. Lower the vehicle on the lift.
14. Refill the transmission with the recommended transmission fluid (see page 14-176).
15. Check the wheel alignment, and adjust it if necessary (see page 18-6).
16. Test-drive the vehicle.

Intermediate Shaft Removal

1. Drain the transmission fluid, then reinstall the drain plug with a new sealing washer (see page 14-176).
2. Remove the right driveshaft (see page 16-4).
3. Remove the three dowel bolts (A).

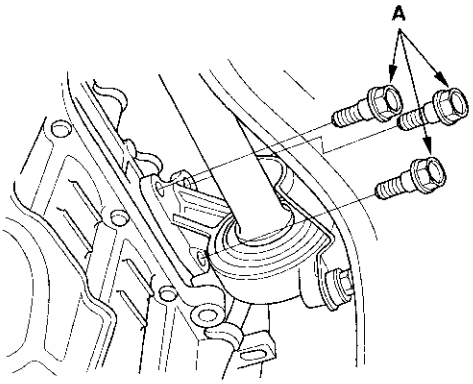

4. Remove the intermediate shaft (A) from the differential. Hold the intermediate shaft horizontally until it is clear of the differential to prevent damaging the oil seal (B).

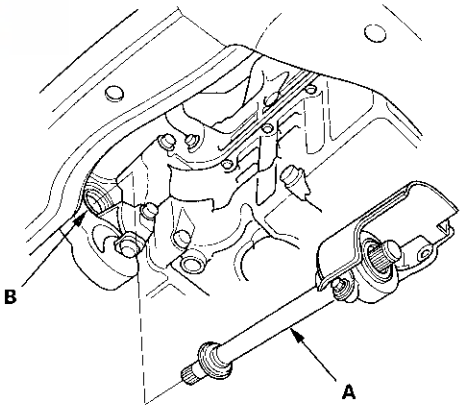

Intermediate Shaft Disassembly

Special Tools Required
- Support base attachment 07JAF-SH20400
- Oil seal driver, 44.5 mm 07947-SB00100
- Support base 07965-SD90100

1. Remove the heat shield (A).

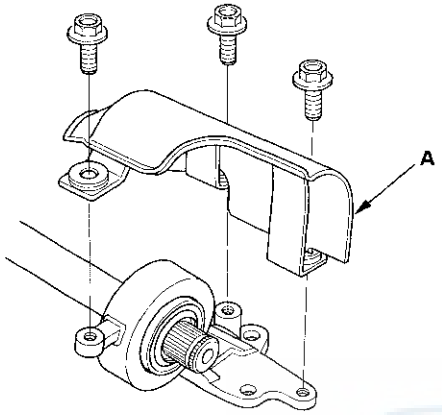

2. Remove the outer seal (A) and the external snap ring (B).

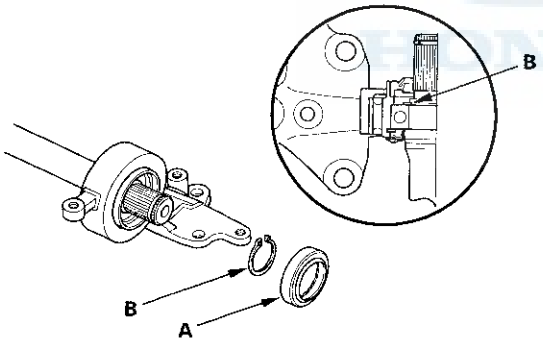

3. Press the intermediate shaft (A) out of the intermediate shaft bearing (B) using the support base attachment (C), the support base (D), and a press. Be careful not to damage the bearing support ring (E) on the intermediate shaft during disassembly.

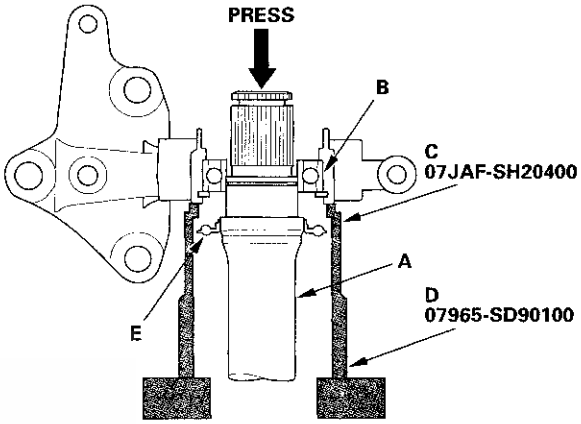

4. Remove the internal snap ring (A) from the bearing support (B).

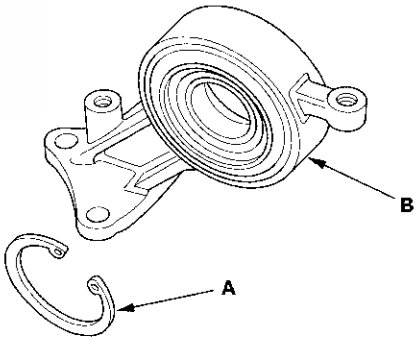

(cont'd)

Intermediate Shaft Disassembly (cont'd)

5. Press the intermediate shaft bearing (A) out of the bearing support (B) using the support base attachment (C), the support base (D), the 44.5 mm oil seal driver (E), and a press.

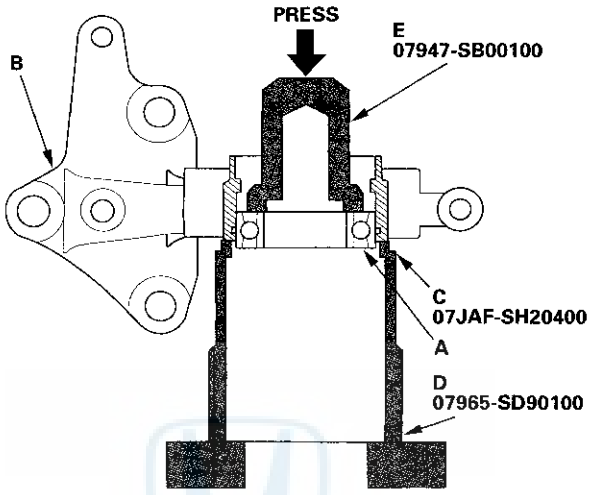

Intermediate Shaft Reassembly

Exploded View

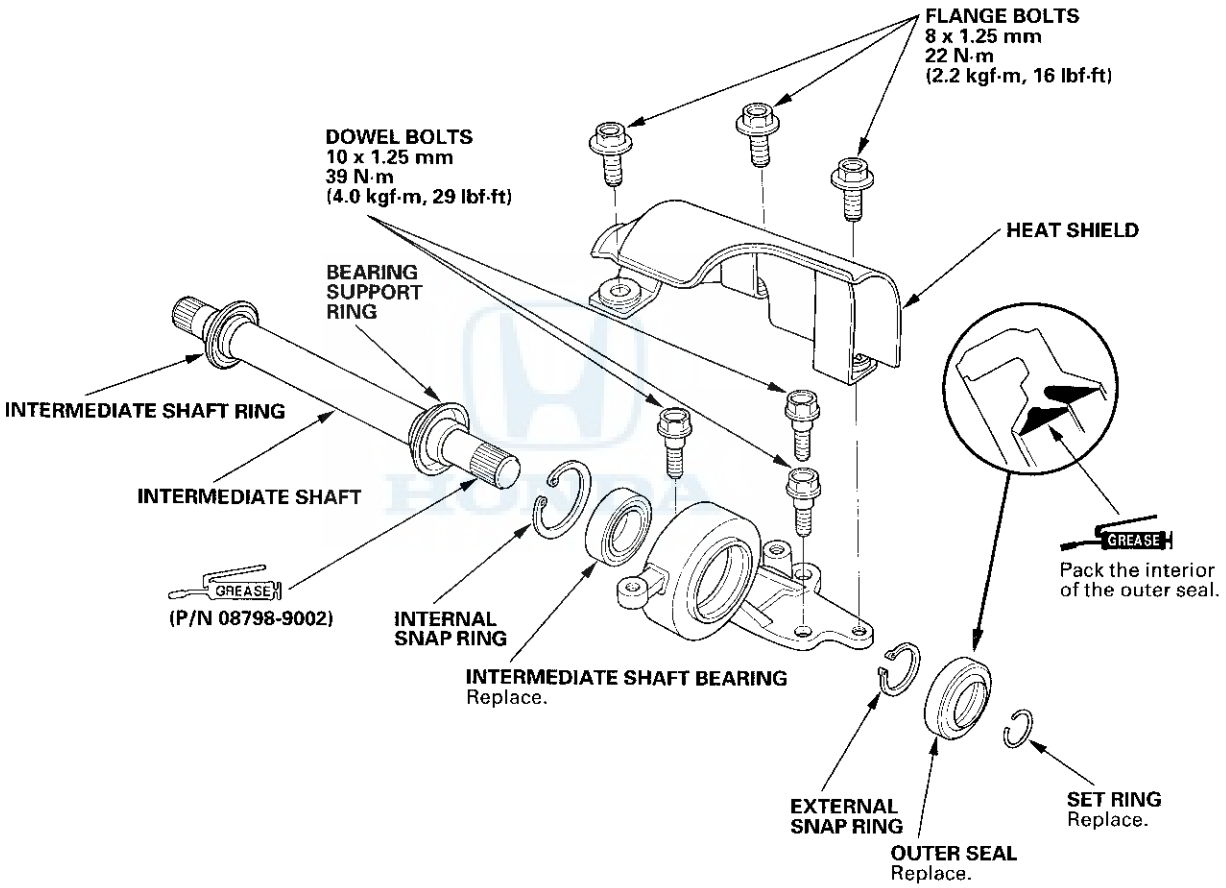

(cont'd)

Intermediate Shaft Reassembly (cont'd)

Special Tools Required
- Oil seal driver, 64 mm 07GAD-PH70201
- Support base attachment 07JAF-SH20400
- Bearing driver attachment, 52 x 55 mm 07746-0010400
- Inner bearing driver attachment, 35 mm 07746-0030400
- Driver handle, 15 x 135L 07749-0010000
- Support base 07965-SD90100

NOTE: Refer to the Exploded View, as needed, during this procedure.

1. Clean the disassembled parts with solvent, and dry them with compressed air.

   NOTE: Do not wash the rubber parts with solvent.

2. Press a new intermediate shaft bearing (A) into the bearing support (B) using the 52 x 55 mm bearing driver attachment (C), the 15 x 135L driver handle (D), and a press.

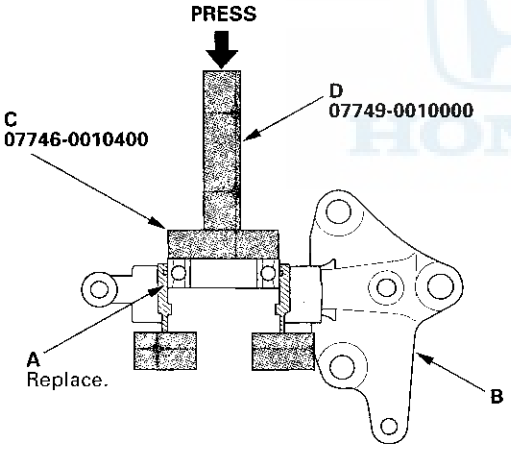

3. Install the internal snap ring (A) into the groove of the bearing support (B).

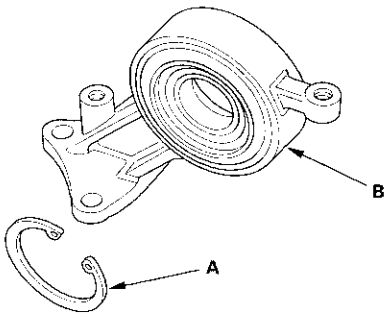

4. Press the intermediate shaft (A) into the shaft bearing (B) using the 35 mm inner bearing driver attachment (C) and a press.

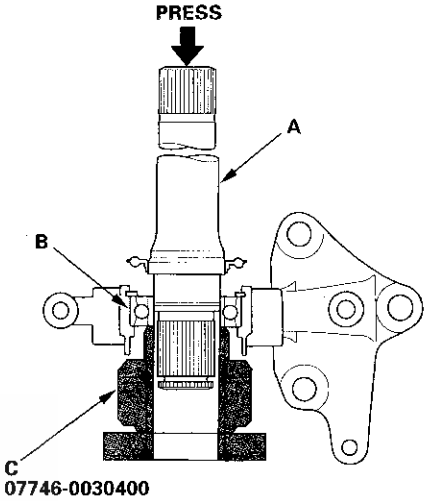

5. Install the external snap ring (A) into the groove of the intermediate shaft (B).

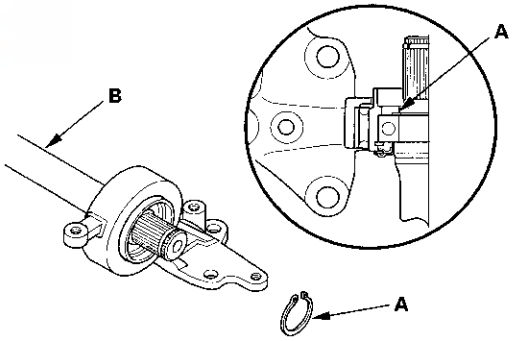

6. Install a new outer seal (A) into the bearing support (B) using the 64 mm oil seal driver (C), the support base attachment (D), the support base (E), and a press. Press in the seal flush with the surface of the intermediate shaft.

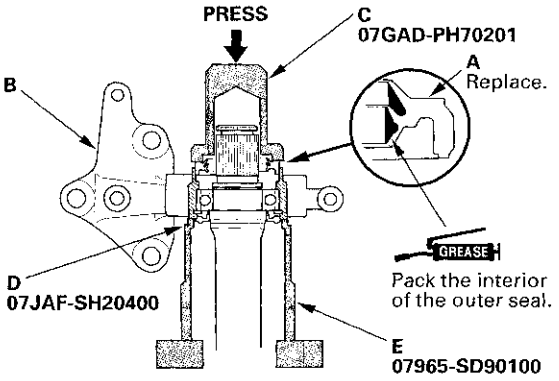

7. Install the heat shield (A).

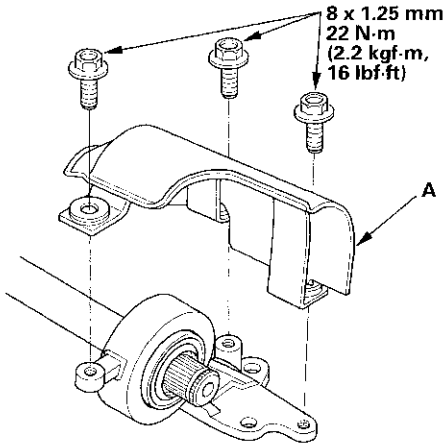

Intermediate Shaft Installation

1. Clean the areas where the intermediate shaft contacts the differential thoroughly with solvent or break cleaner, and dry with compressed air.

   NOTE: Do not wash the rubber parts with solvent.

2. Install a new set ring (A) into the groove of the intermediate shaft (B).

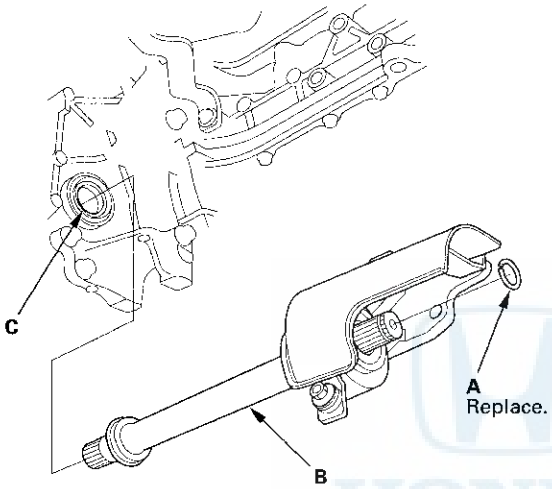

3. Insert the intermediate shaft into the differential correctly.

   NOTE: Insert the intermediate shaft carefully to prevent damaging the oil seal (C).

4. Install the three dowel bolts (A).

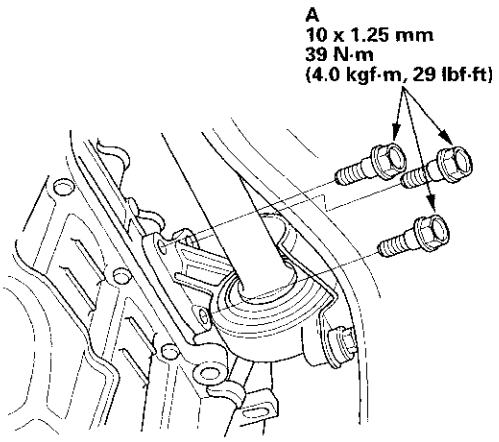

5. Install the right driveshaft (see page 16-20).

6. Refill the transmission with the recommended transmission fluid (see page 14-176).

7. Check the wheel alignment, and adjust it if necessary (see page 18-6).

8. Test-drive the vehicle.

INTRODUCTION

How to Use This Manual

This manual is divided into multiple sections. The first page of each section is marked with a black tab that lines up with its corresponding thumb index tab on this page and the back cover. You can quickly find the first page of each section without looking through a full table of contents. The symbols printed at the top corner of each page can also be used as a quick reference system.

Each section includes:

1. A table of contents, or an exploded view index showing:
   - Parts disassembly sequence.
   - Bolt torques and thread sizes.
   - Page references to descriptions in text.
2. Disassembly/assembly procedures and tools.
3. Inspection.
4. Testing/troubleshooting.
5. Repair.
6. Adjustments.

Safety Messages

Your safety, and the safety of others, is very important. To help you make informed decisions, we have provided safety messages, and other safety information throughout this manual. Of course, it is not practical or possible to warn you about all the hazards associated with servicing this vehicle. You must use your own good judgment.

You will find important safety information in a variety of forms including:

- **Safety Labels** — on the vehicle.
- **Safety Messages** — preceded by a safety alert symbol ⚠ and one of three signal words, DANGER, WARNING, or CAUTION. These signal words mean:

  ⚠DANGER You WILL be KILLED or SERIOUSLY HURT if you don't follow instructions.

  ⚠WARNING You CAN be KILLED or SERIOUSLY HURT if you don't follow instructions.

  ⚠CAUTION You CAN be HURT if you don't follow instructions.
- **Instructions** — how to service this vehicle correctly and safely.

All information contained in this manual is based on the latest product information available at the time of printing. We reserve the right to make changes at anytime without notice. No part of this publication may be reproduced, or stored in a retrieval system, or transmitted, in any form by any means, electronic, mechanical, photocopying, recording, or otherwise, without the prior written permission of the publisher. This includes text, figures, and tables.

As you read this manual, you will find information that is preceded by a NOTICE symbol. The purpose of this message is to help prevent damage to your vehicle, other property, or the environment.

First Edition 12/2008
HONDA MOTOR CO., LTD.
Service Publication Office
All Rights Reserved
Specifications apply to USA and Canada

As sections with * include SRS components; special precautions are required when servicing.

* marked sections are not included in this manual, see Volume 1.

*Steering
Suspension (Including TPMS)
Brakes (Including VSA)
*Body
*Heating, Ventilation, and Air Conditioning
*Body Electrical
*Audio, Navigation, and Telematics
*Restraints

2006-09 Civic Hybrid

Vol . 2 of 2

SUPPLEMENTAL RESTRAINT SYSTEM (SRS) (If steering maintenance is required)

The Civic Hybrid SRS includes a driver's airbag in the steering wheel hub, a passenger's airbag in the dashboard above the glove box, seat belt tensioners in the front seat belt retractors, seat belt buckle tensioners in the front seat belt buckles, side curtain airbags in the sides of the roof, and side airbags in the front seat-backs. Information necessary to safely service the SRS is included in this Service Manual. Items marked with an asterisk (*) on the contents page include or are located near SRS components. Servicing, disassembling, or replacing these items requires special precautions and tools, and should be done by an authorized Honda dealer.

- To avoid rendering the SRS inoperative, which could lead to personal injury or death in the event of a severe frontal or side collision, all SRS service work should be done by an authorized Honda dealer.
- Improper service procedures, including incorrect removal and installation of the SRS, could lead to personal injury caused by unintentional deployment of the airbags, side airbags, and/or side curtain airbags.
- Do not bump or impact the SRS unit, front impact sensors, side impact sensors, or rear safing sensor when the ignition switch is in ON (II), or for at least 3 minutes after the ignition switch is turned to LOCK (0); otherwise, the system may fail in a collision, or the airbags may deploy.
- SRS electrical connectors are identified by yellow color coding. Related components are located in the steering column, front console, dashboard, dashboard lower panel, in the dashboard above the glove box, in the front seats, in the roof side, and around the floor. Do not use electrical test equipment on these circuits.

Steering

Steering

Special Tools 17-2
Component Location Index 17-3
Steering Wheel Rotational Play Check 17-4
Power Assist Check 17-4
Steering Linkage and Gearbox Inspection 17-5
* Steering Wheel Removal 17-6
Steering Wheel Disassembly/Reassembly 17-7
* Steering Wheel Installation 17-9
Column Cover Removal and Installation 17-10
* Steering Column Removal and Installation 17-11
Steering Column Inspection 17-15
Steering Lock Replacement 17-15
Rack Guide Adjustment 17-16

EPS (Electrical Power Steering) Components 17-17

Special Tools

Ref. No.	Tool Number	Description	Qty
①	07AAF-SDAA100	Ball Joint Thread Protector, 12 mm	1
②	07AAK-SNAA120	Universal Eyelet	1
③	07JAF-SH20330	Bushing Base	1
④	07MAA-SL0020A	Locknut Wrench, 43 mm	1
⑤	07MAC-SL0A202	Ball Joint Remover, 28 mm	1

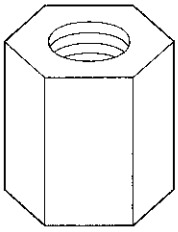

①

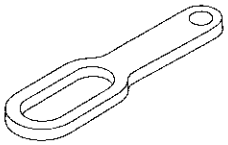

②

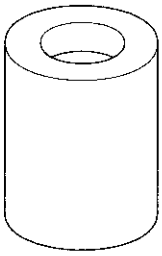

③

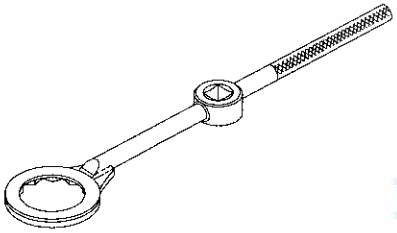

④

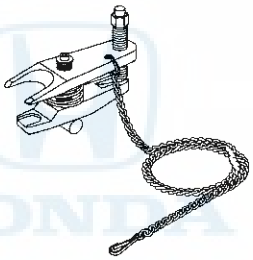

⑤

Component Location Index

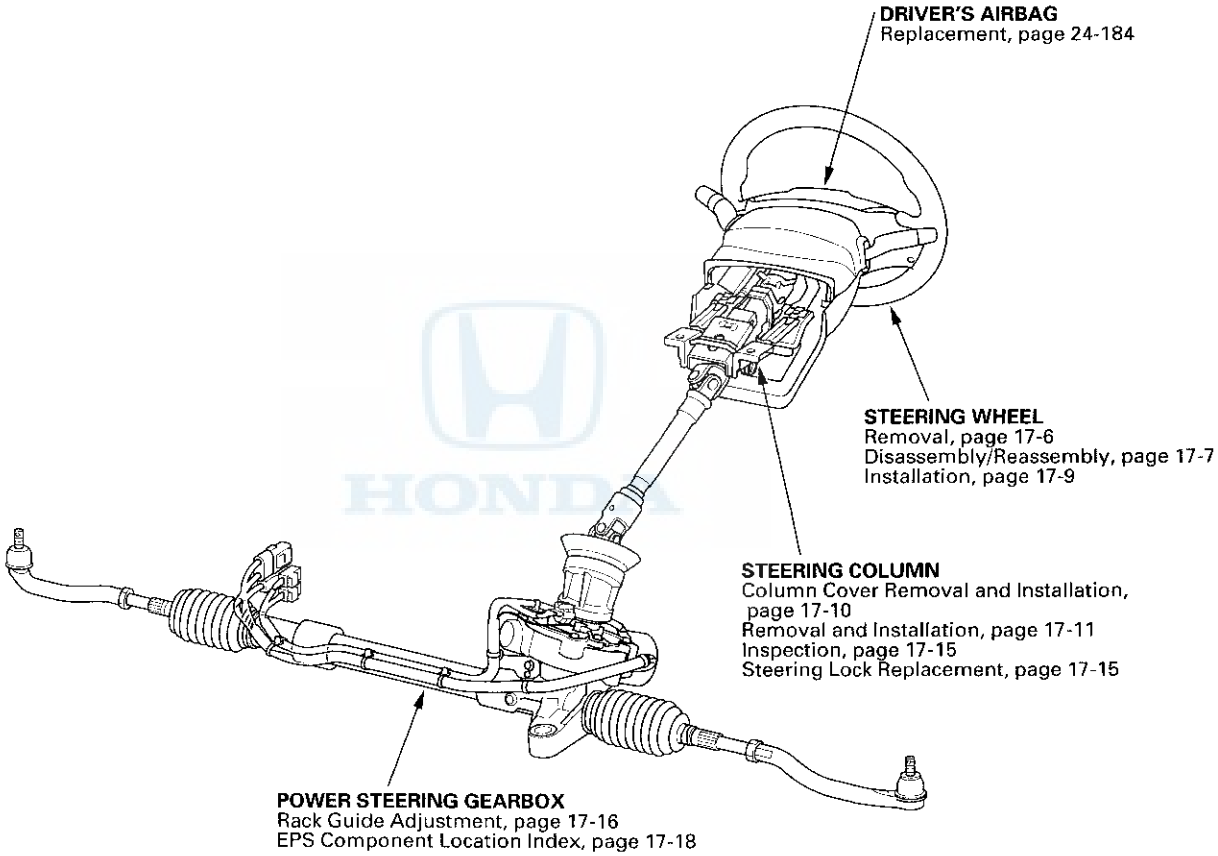

Steering Wheel Rotational Play Check

1. Turn the front wheels to the straight ahead position.

2. Measure how far you can turn the steering wheel left and right without moving the front wheels.

   - If the play is within the limit, the steering gearbox and the steering linkage are OK.
   - If the play exceeds the limit, adjust the rack guide (see page 17-16). If the play is still excessive after rack guide adjustment, inspect the steering linkage and the steering gearbox (see page 17-5).

Rotational play: 0—10 mm (0—0.39 in.)

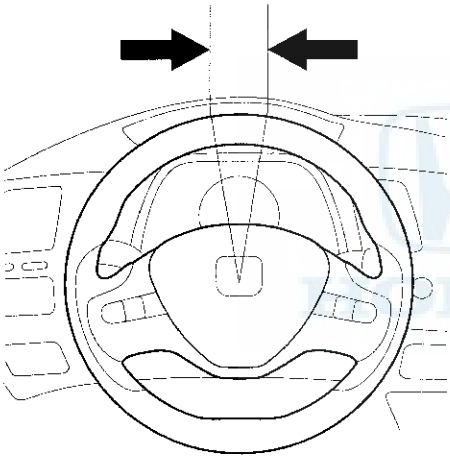

Power Assist Check

NOTE: This test should be done with original equipment tires and wheels at the correct tire pressure.

1. Start the engine, and let it idle.

2. Attach a commercially available spring scale to the steering wheel. With the engine idling and the vehicle on a clean, dry floor, pull the scale as shown, and read it as soon as the tires begin to turn.

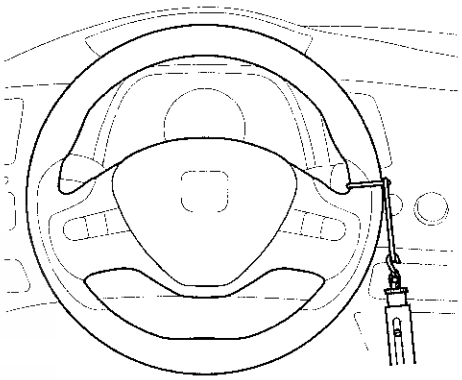

3. If the scale reads no more than 34 N (3.5 kgf, 7.7 lbf), the power assist is OK. If it reads more, check these items:

   - Steering linkage (see page 17-5)
   - Rack guide adjustment (see page 17-16)
   - EPS system (see page 17-19)

Steering Linkage and Gearbox Inspection

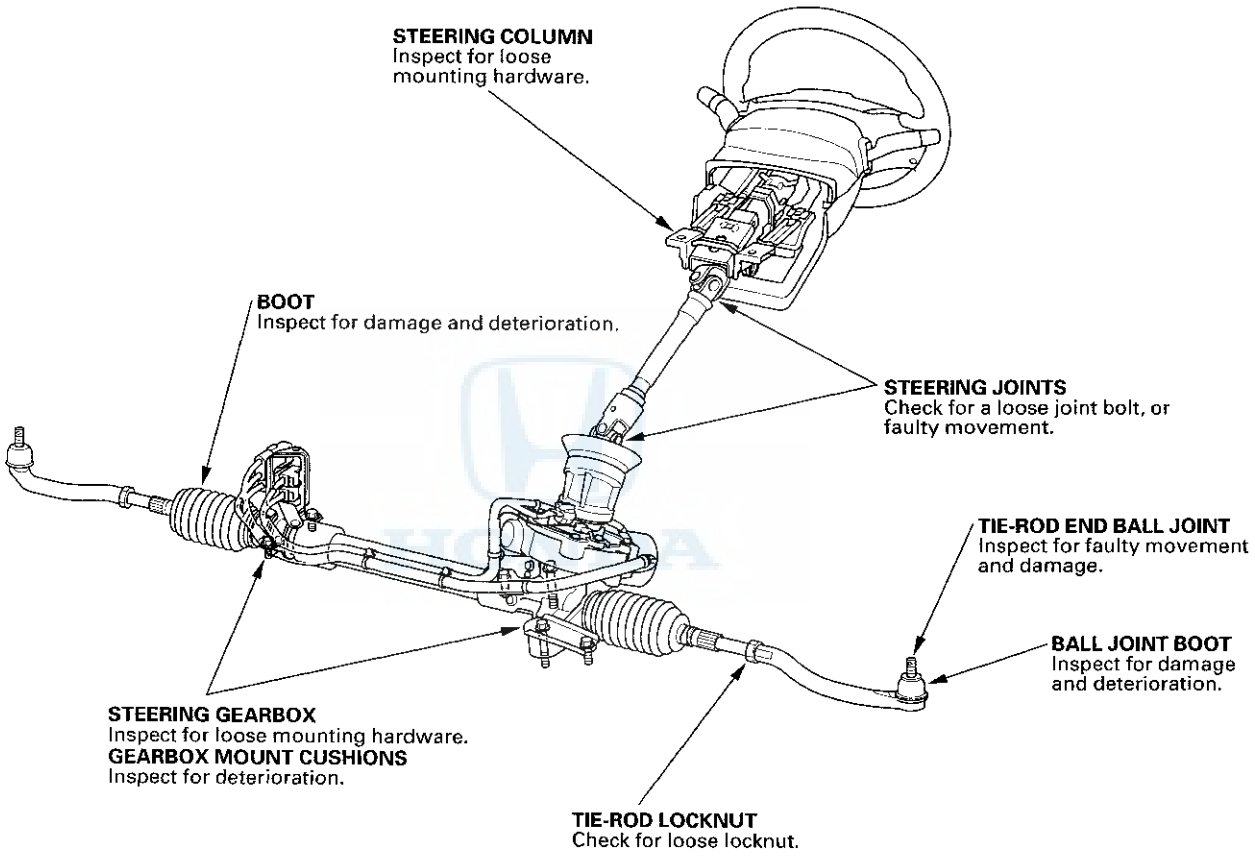

Steering Wheel Removal

SRS components are located in this area. Review the SRS component locations (see page 24-11) and the precautions and procedures (see page 24-13) before doing repairs or service.

1. Do the battery terminal disconnection procedure (see page 22-62).

2. Align the front wheels straight ahead, then remove the driver's airbag from the steering wheel (see page 24-184).

3. Disconnect the cable reel subharness connector (A).

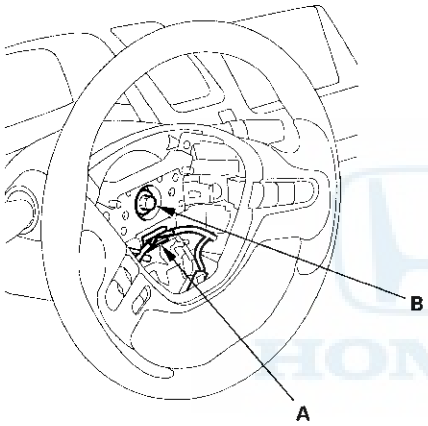

4. Loosen the steering wheel bolt (B).

5. Install a commercially available steering wheel puller (A) on the steering wheel (B). Free the steering wheel from the steering column shaft by turning the pressure bolt (C) of the puller.

   Note these items when removing the steering wheel:
   - Do not tap on the steering wheel or the steering column shaft when removing the steering wheel.
   - If you thread the puller bolts (D) into the wheel hub more than five threads, the bolts will hit the cable reel and damage it. To prevent this, install a pair of jam nuts five threads up on each puller bolt.

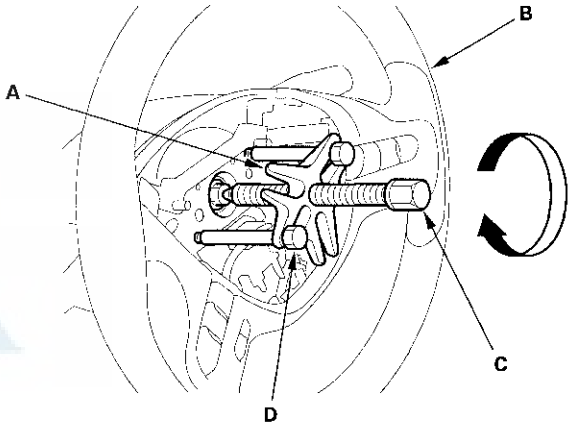

6. Remove the steering wheel puller, then remove the steering wheel bolt and the steering wheel from the steering column.

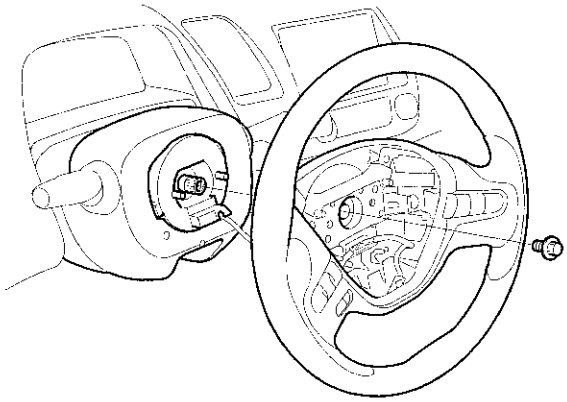

Steering Wheel Disassembly/Reassembly

'06-08 models

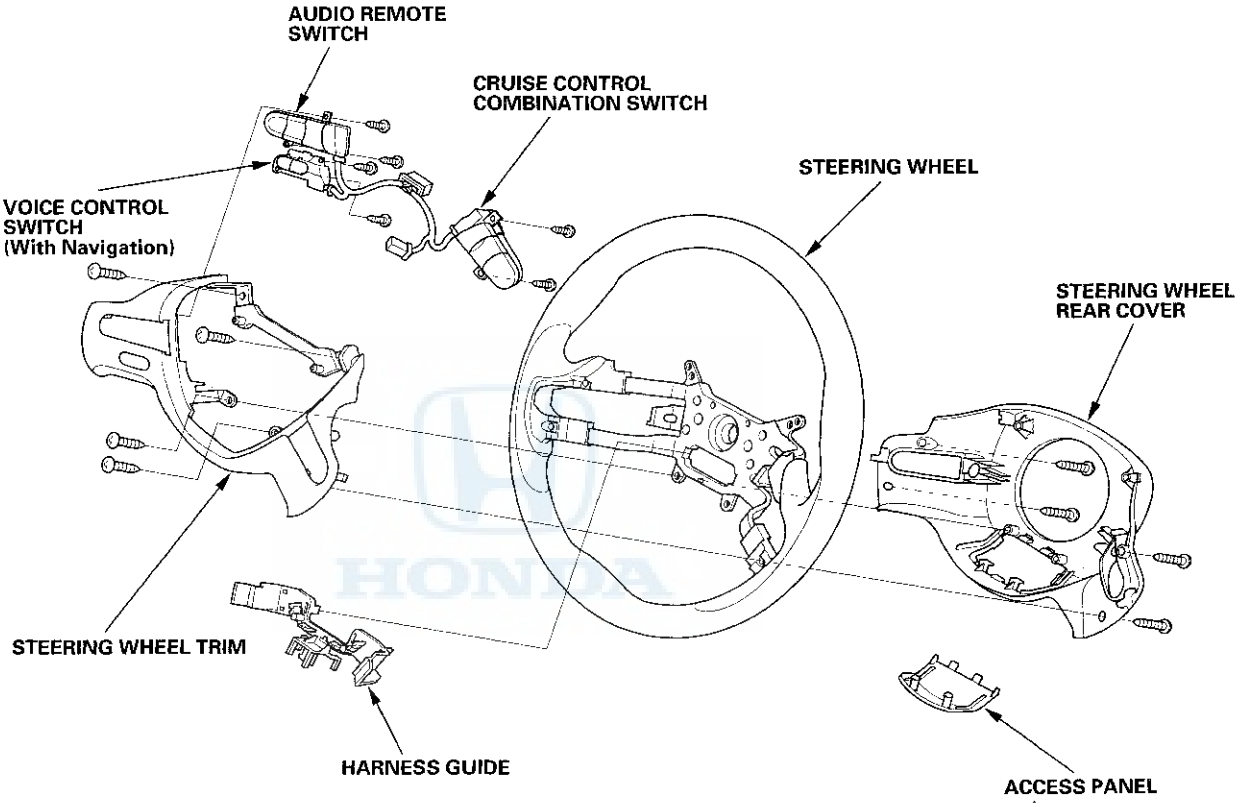

(cont'd)

Steering Wheel Disassembly/Reassembly (cont'd)

'09 model

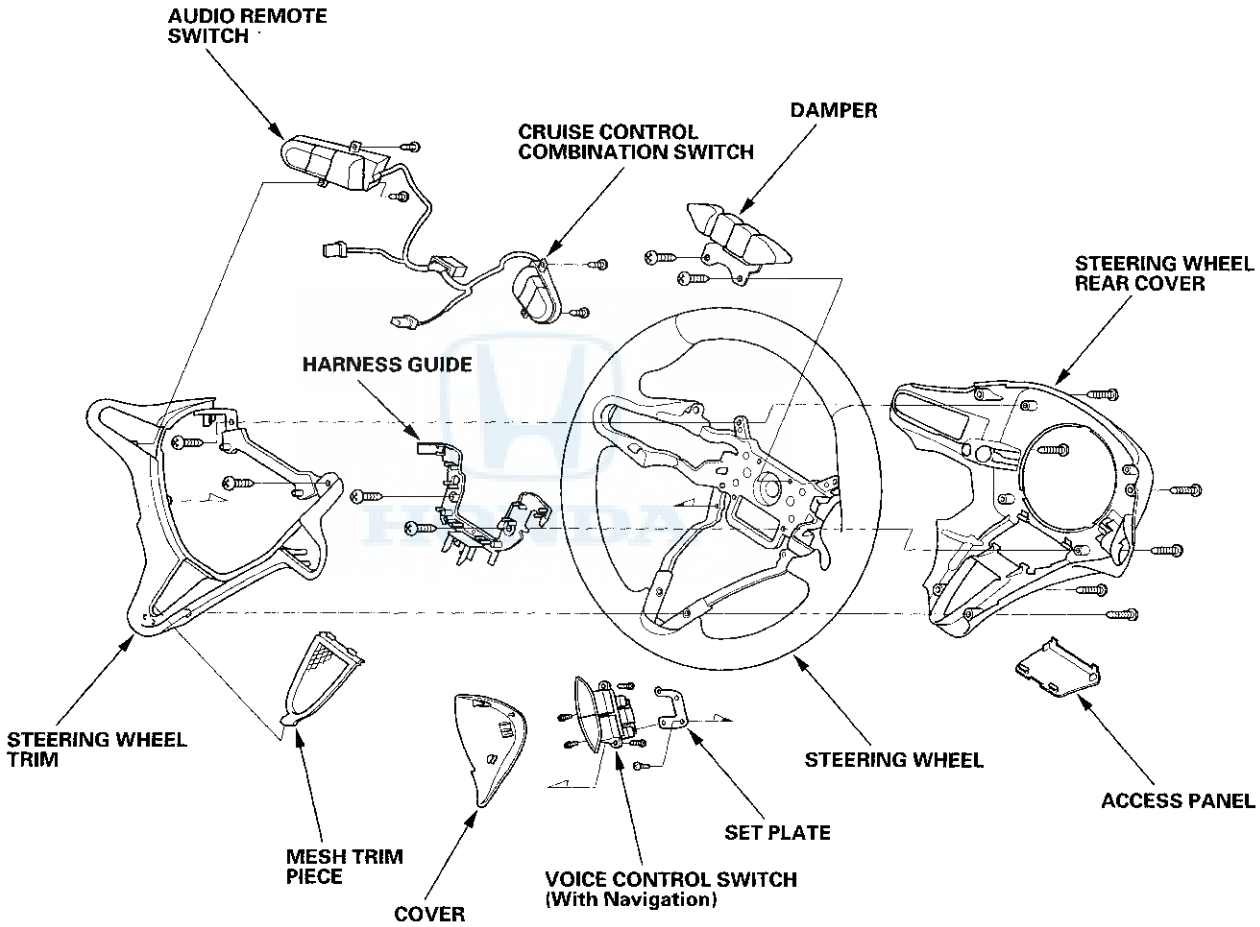

Steering Wheel Installation

1. Before installing the steering wheel, make sure the front wheels are pointing straight ahead, then center the cable reel (A). Do this by first rotating the cable reel clockwise until it stops. Then rotate it counterclockwise about three full turns. The arrow mark (B) on the cable reel label should point straight up.

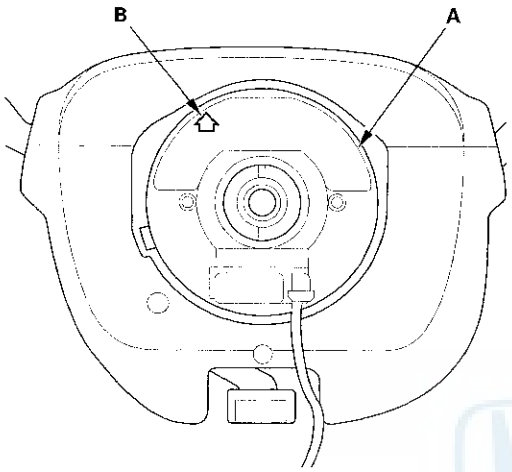

2. Position the two tabs (A) of the turn signal canceling sleeve (B) as shown. Install the steering wheel on to the steering column shaft, making sure the steering wheel hub (C) engages the pins (D) of the cable reel and tabs of the turn signal canceling sleeve. Do not tap on the steering wheel or steering column shaft when installing the steering wheel.

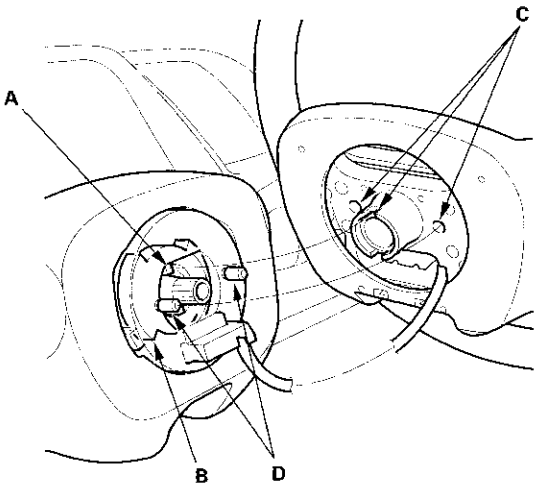

3. Install the steering wheel bolt (A), and tighten it to the specified torque. Connect the cable reel subharness connector (B). Make sure the wire harness is routed and fastened properly.

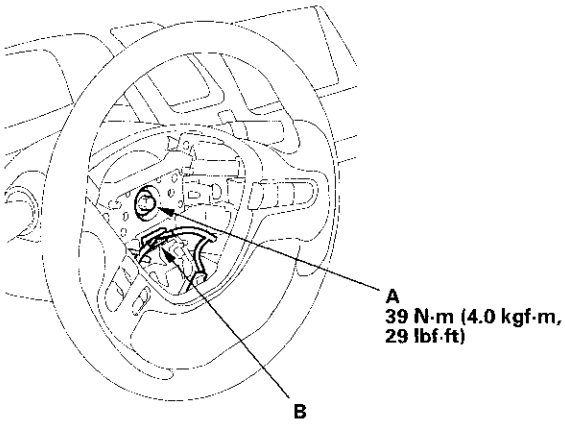

4. Install the driver's airbag, and confirm that the system operating properly (see page 24-184).

5. Do the battery terminal reconnection procedure (see page 22-62), and do these tasks:

   NOTE: If the IMA battery level gauge (BAT) displays no segments, start the engine, and hold it between 3,500 rpm and 4,000 rpm without load (in Park or neutral) until the BAT displays at least three segments.

   - Turn the ignition switch to ON (II), and check that the SRS indicator comes on for about 6 seconds and then goes off.
   - Make sure the horn and turn signal switches work properly.
   - Make sure the steering wheel switches work properly.

6. After installation, check the steering wheel spoke angle. If the steering spoke angles to the right and left are not equal (steering wheel is not centered), correct the engagement of the wheel/column shaft splines.

Column Cover Removal and Installation

NOTE:
- Take care not to scratch or damage the column covers.
- Do not pry the cover surface with any tools.

1. Release the lock lever (A), and adjust the steering column to full tilt down position and to the full telescopic pull position.

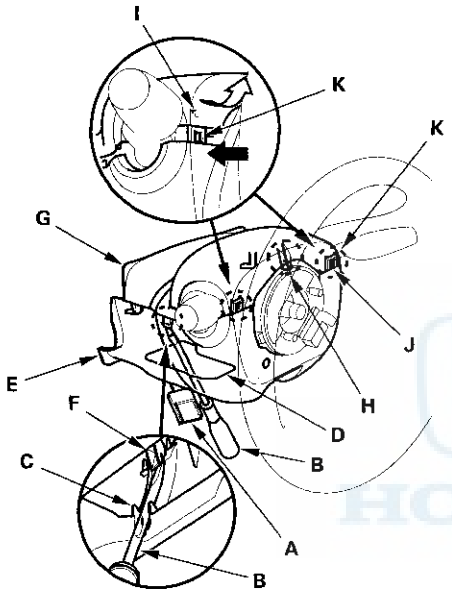

2. Insert a suitable sized screwdriver or equivalent tool (B) along the guide rib (C) into the lever hole (D) in the lower column cover (E).

3. Release the hook (F) located on the left side of the upper column cover (G). The right side hook (H) of the upper column cover cannot be released from the inside.

4. Turn the steering wheel to the left, and release the left pawl (I) of the upper column cover while pushing the lower column cover from the front side.

5. Turn the steering wheel to the right, and release the right pawl (J) of the upper column cover in the same way as in step 4.

6. Remove the cover by lightly pulling it up by releasing the right side hook of the upper column cover.

NOTICE
Carefully release the pawls, note the hooks (K) may break when the upper column cover is pulled up too hard.

7. Remove the three screws, then remove the lower column cover (A).

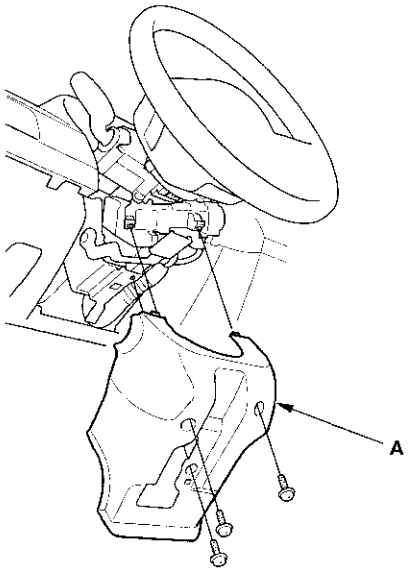

8. Install the upper and the lower column cover in the reverse order of removal, and push the hooks into place securely.

Steering Column Removal and Installation

SRS components are located in this area. Review the SRS component locations (see page 24-11) and the precautions and procedures (see page 24-13) before doing repairs or service.

Removal

NOTICE

Be careful not to pull the bracket (A) on the front side of the steering column out of its normal position. If the bracket accidentally comes out, replace the steering column as an assembly.

Normal position

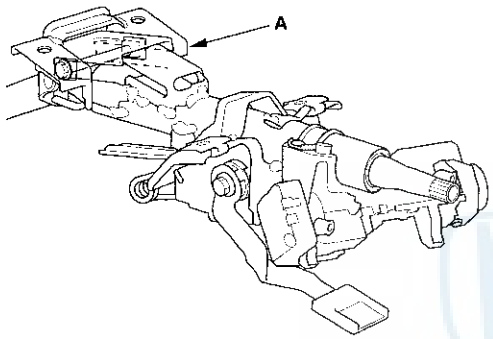

Out of position

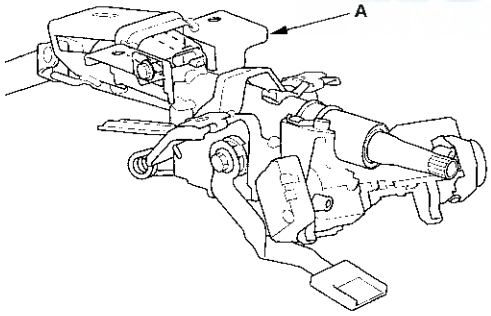

1. Do the battery terminal disconnection procedure (see page 22-62).

2. Remove the driver's airbag (see page 24-184) and the steering wheel (see page 17-6).

3. Remove the driver's dashboard undercover (see page 20-90).

4. Remove the column covers (see page 17-10).

5. Remove the steering joint cover (A).

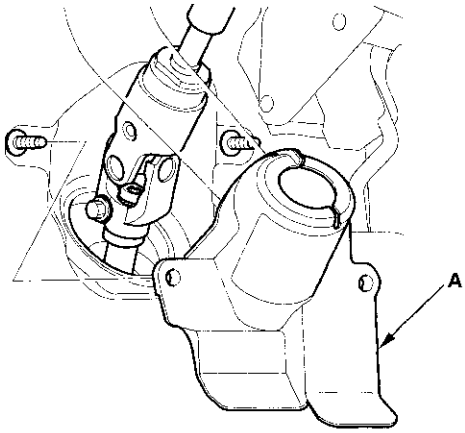

6. Release the lock lever, and adjust the steering column to the full tilt up position, and to the full telescopic in position.

7. Tighten the lock lever.

8. Hold the lower slide shaft (A) on the column with a piece of wire (B) between the joint yoke (C) of the lower slide shaft and the joint yoke (D) of the upper shaft to prevent the slider shaft from pulling out.

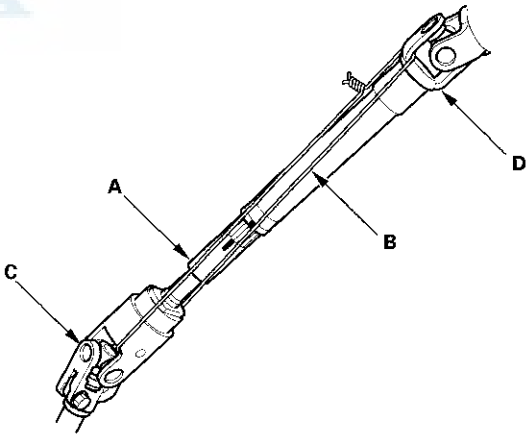

9. Release the lock lever, and adjust the steering column to the full telescopic out position, then tighten the lock lever.

   NOTE: Do not release the lock lever when removing the steering column from the frame.

(cont'd)

Steering Column Removal and Installation (cont'd)

10. Disconnect the wire harness connectors from the combination switch assembly/cable reel (A).

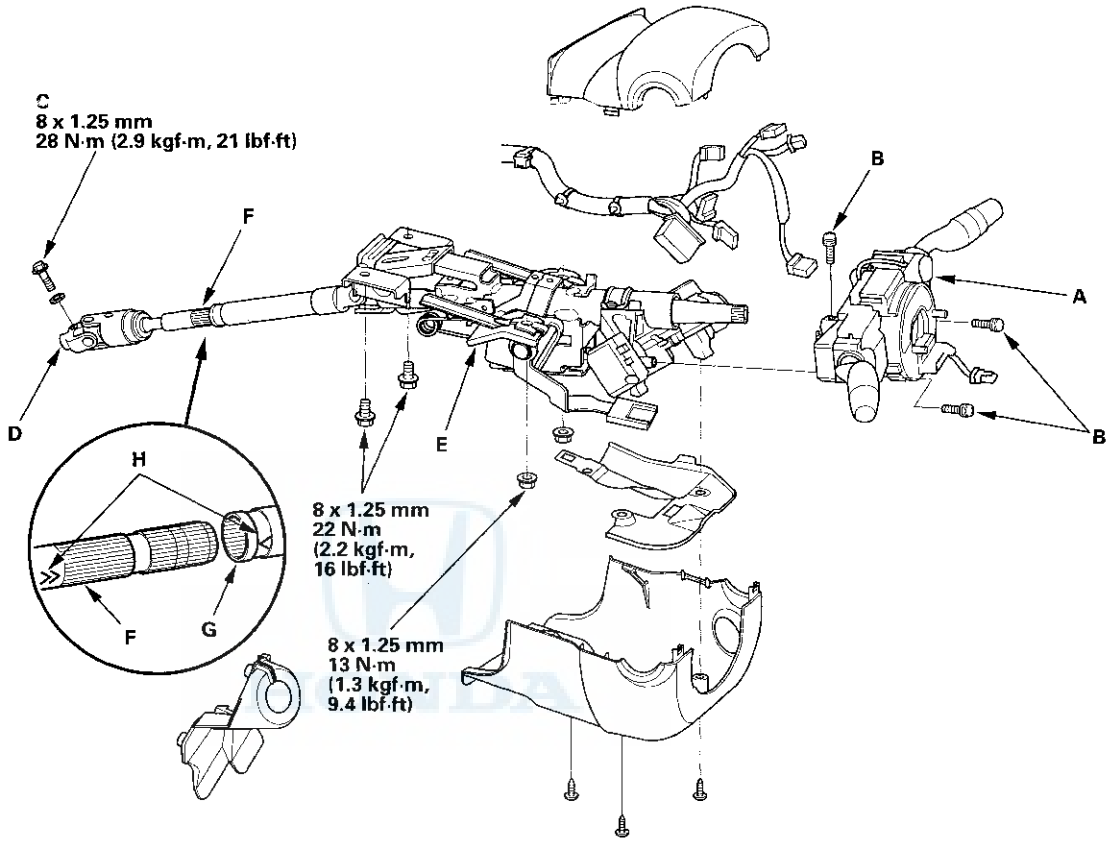

11. Remove the combination switch assembly/cable reel from the steering column shaft by removing the screws (B).

12. Disconnect the connectors from the ignition switch, and release the wire harness clips from the steering column.

13. Remove the steering joint bolt (C), then disconnect the steering joint (D) from the pinion shaft.

    NOTE:
    - If the center guide is in place and has not moved, leave it in place.
    - If the center guide has come off, discard it.

14. Remove the steering column (E) by removing the attaching nuts and bolts. If the lower slide shaft (F) is removed, slip it into the upper shaft (G) by aligning the paint or stamped marks (H).

Installation

1. Install the steering column in the reverse order of removal, and note these items:

   - Make sure the wires are not caught or pinched by any parts.
   - Tighten the three screws (A) in the sequence shown.

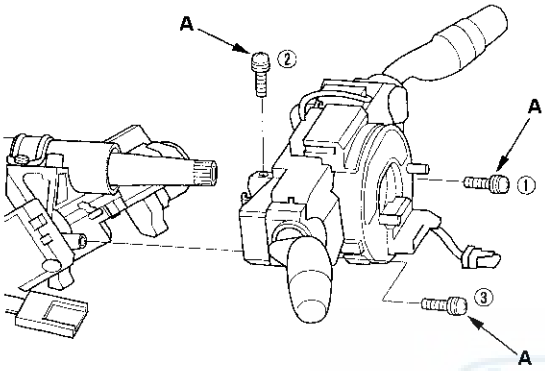

2. Center the steering rack within its stroke in the steering joint connection.

3. With the rack in the straight ahead driving position, cut the wire (A) and slip the lower end of the steering joint onto the pinion shaft (B).

   NOTE:
   - Pinion shaft with center guide; install the steering joint by aligning the center guide.
   - Pinion shaft without center guide; position the steering column by aligning the gap (C) within the angle.

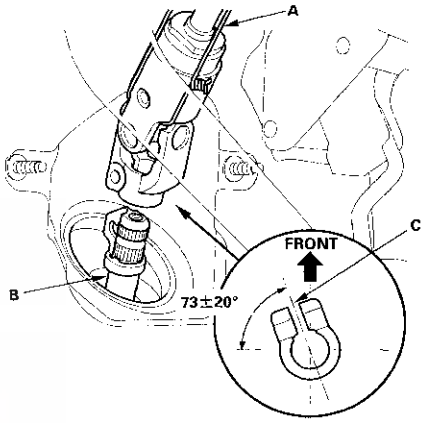

4. Align the bolt hole (A) on the steering joint with the groove (B) around the pinion shaft, then loosely install the steering joint bolt (C). Be sure that the joint bolt is securely in the groove in the pinion shaft. Pull on the steering joint to make sure that the steering joint is fully seated. Tighten the steering joint bolt to the specified torque.

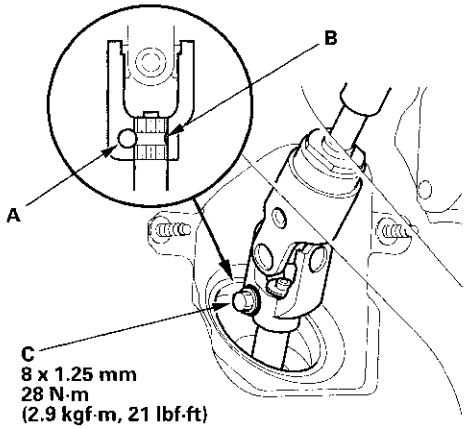

(cont'd)

Steering Column Removal and Installation (cont'd)

5. Install the steering joint cover (A).

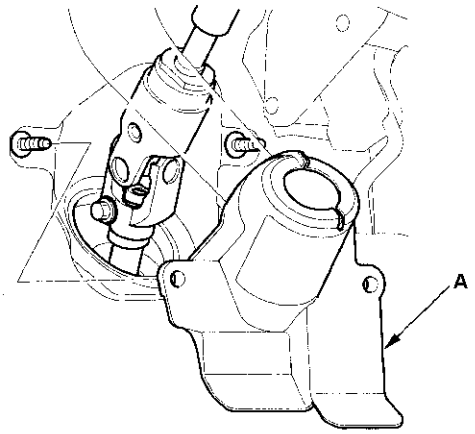

6. Install the steering wheel (see page 17-9).

7. Install the column covers (see page 17-10).

8. Install the driver's dashboard undercover (see page 20-90).

9. Do the battery terminal reconnection procedure (see page 22-62), and do these tasks:

   - Turn the ignition switch to ON (II), and check that the SRS indicator comes on for about 6 seconds and then goes off.
   - Make sure the horn and turn signal switches work properly.
   - Make sure the steering wheel switches work properly.

10. After installation, do these checks:

   - Check the steering wheel spoke angle. If the steering spoke angles to the right and left are not equal (steering wheel and rack are not centered), correct the engagement of the joint/pinion shaft splines.
   - Set the steering column to the center tilt position, and to the center telescopic position, then do the front toe inspection (see page 18-8).

Steering Column Inspection

- Check the steering column ball bearing (A) and the steering joint bearings (B) for play and proper movement. If any bearing is noisy or has excessive play, replace the steering column as an assembly.
- Check the lower slide shaft (C) for smooth movement in and out. If the lower slide shaft is removed, slip it into the upper shaft by aligning the paint or stamped marks (D). If it sticks or binds, replace the steering column as an assembly.
- Check the sliding capsules (E) for distortion or breakage. If there is distortion or breakage, replace the steering column as an assembly.
- Check the tilt mechanism and telescopic mechanism for movement and damage.
- Check the absorbing plates (F) for distortion or breakage. If there is distortion or breakage, replace the steering column as an assembly.

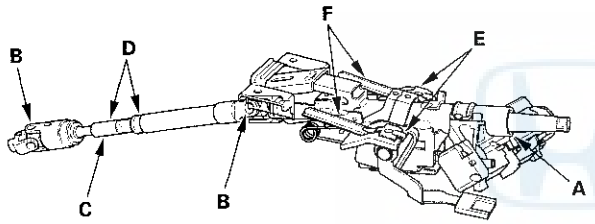

Steering Lock Replacement

1. Remove the steering column (see page 17-11).
2. Center-punch both of the two shear bolts, and drill the heads of the bolts off with a 5 mm (3/16 in.) drill bit. Be careful not to damage the switch body when removing the shear bolts.

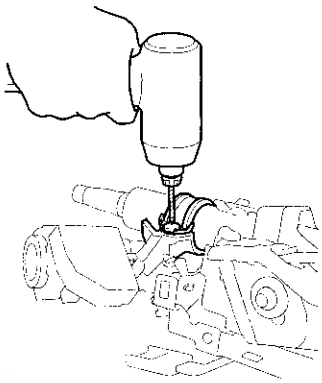

3. Remove the shear bolts from the switch body.
4. Install the switch body without the key inserted.
5. Loosely tighten the new shear bolts.
6. Insert the ignition key, and check for proper operation of the steering wheel lock and that the ignition key turns freely.
7. Tighten the shear bolts (A) until the hex heads (B) twist off.

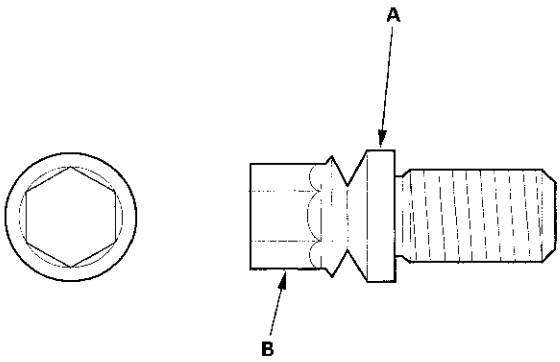

8. Rewrite the immobilizer control unit-receiver (see page 22-301), and make sure the immobilizer system works properly.
9. Install the steering column (see page 17-13).

Rack Guide Adjustment

Special Tools Required
Locknut wrench, 43 mm 07MAA-SL0020A

1. Set the wheels in the straight ahead position.

2. Loosen the rack guide screw locknut (A) with the locknut wrench, then remove the rack guide screw (B).

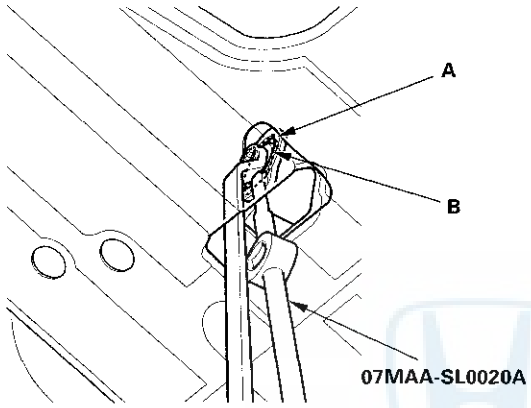

3. Remove the old sealant from the rack guide screw (A), and apply new sealant (Three Bond 1215 or Loctite 5699) to the middle of the threads (B). Loosely install the rack guide screw on the steering gearbox.

   NOTE: If more than 5 minutes has passed after applying the sealant, remove the old sealant and residue, and reapply new sealant.

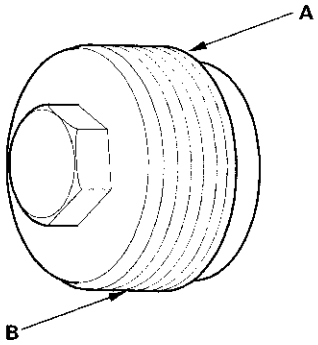

4. Tighten the rack guide screw (A) to 25 N·m (2.5 kgf·m, 18 lbf·ft), then loosen it.

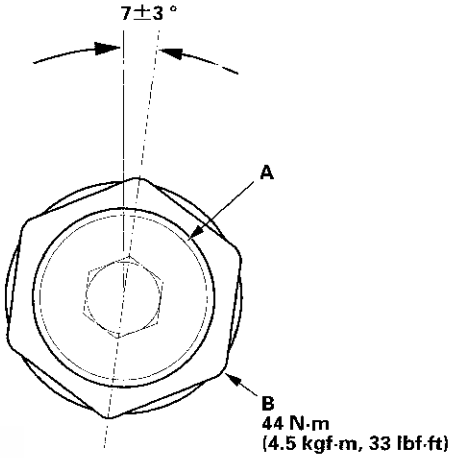

5. Retighten the rack guide screw to 3.9 N·m (0.4 kgf·m, 2.9 lbf·ft), then back it off to the specified angle.

   Specified return angle: 7 ±3 °

6. Hold the rack guide screw stationary with a wrench, and install the locknut (B) by hand until it's fully seated.

7. Install the locknut wrench on the locknut, and hold the rack guide screw stationary with a wrench. Tighten the locknut to the specified torque.

8. Check for unusual steering effort through out the complete turning range.

9. Check the steering wheel rotational play (see page 17-4), and the power assist (see page 17-4).

Steering

Steering **17-1**

EPS (Electrical Power Steering) Components

Component Location Index 17-18
General Troubleshooting Information 17-19
Memorizing the Torque Sensor Neutral Position 17-22
DTC Troubleshooting Index 17-23
Symptom Troubleshooting Index 17-25
System Description 17-26
Circuit Diagram 17-30
DTC Troubleshooting 17-33
Symptom Troubleshooting 17-60
EPS Motor Removal and Installation 17-63
Steering Gearbox Removal and Installation 17-65
Rack End Removal and Installation 17-77
Rack Guide Removal/Installation 17-81
EPS Control Unit Removal/Installation 17-82
Tie-rod End Ball Joint Boot Replacement 17-83
Gearbox Mount Cushion Replacement 17-84

EPS Components

Component Location Index

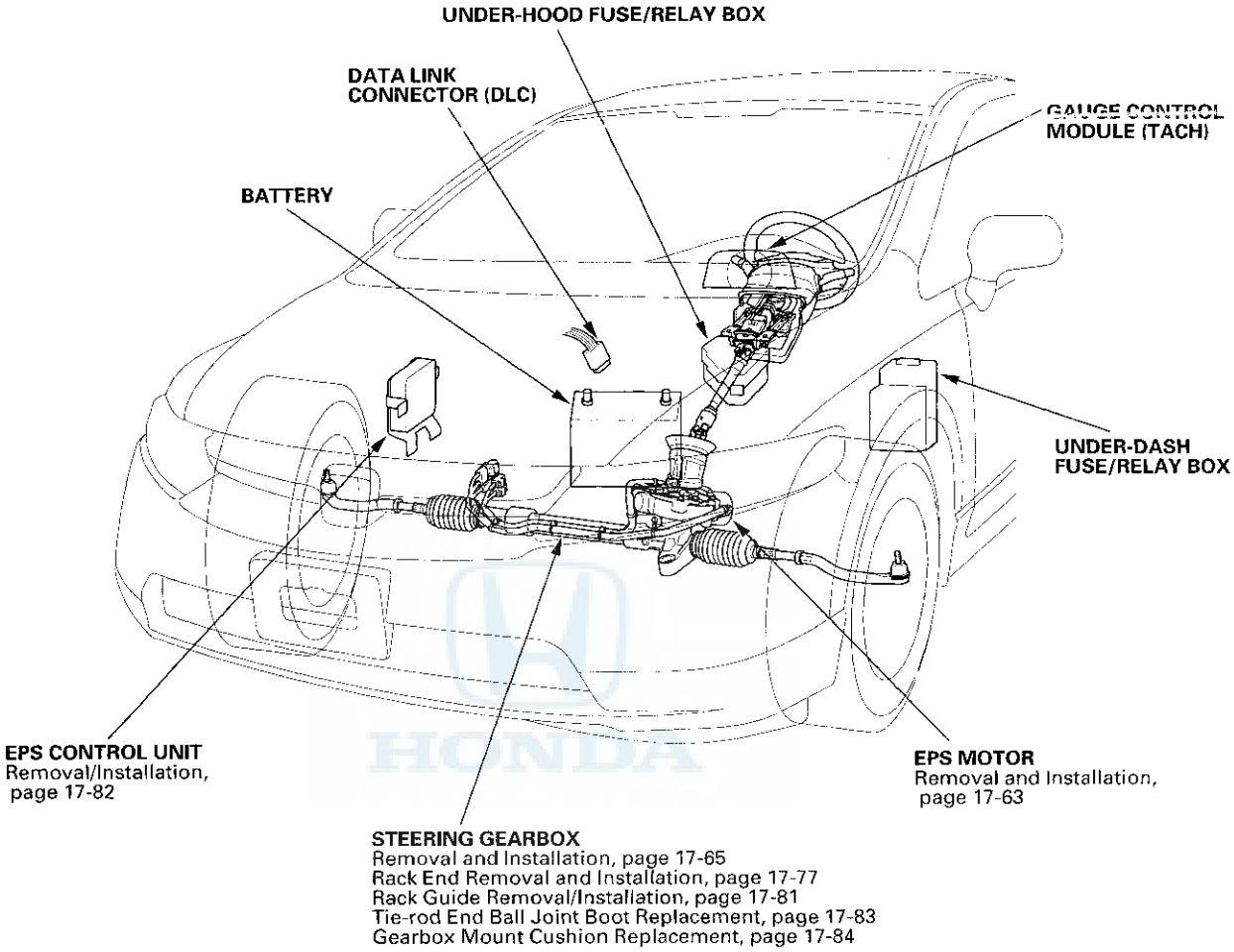

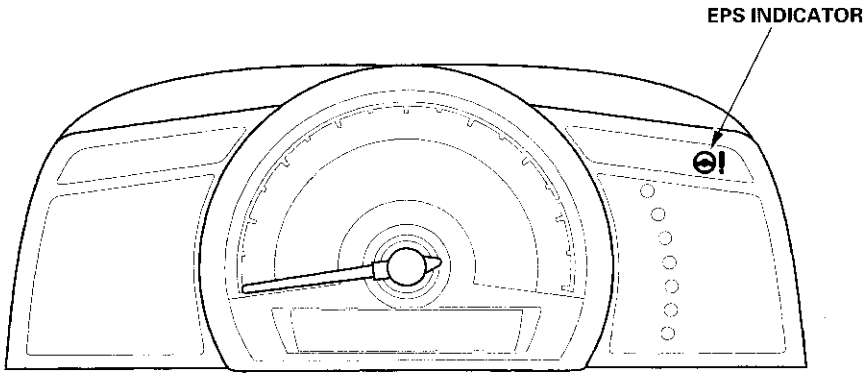

General Troubleshooting Information

EPS Indicator

Under normal conditions, the EPS indicator comes on when the ignition switch is turned to ON (II), then goes off after the engine is started. This indicates that the LED and its circuit are operating correctly.
If there is a failure in the system after the engine is started, the EPS indicator will stay on, and the power assist is turned off or restricted.

When the EPS indicator comes on, the control unit memorizes the DTC. In this case, the control unit will not activate the EPS system after the engine starts again, but it keeps the EPS indicator on.

When DTC 51-01, 51-02 or 51-06 is stored in the control unit, the EPS indicator will stay on until the DTC is erased. When a problem is detected and the EPS indicator comes on, there are cases when the indicator stays on until the ignition switch is turned to LOCK (0), and cases when the indicator goes off automatically when the system returns to normal. Even though the system is operating normally, the EPS indicator will come on under the following conditions:

- The vehicle speed decreases abruptly from 12 mph (20 km/h) or more (by applying brake), and it is less than 1 mph (1 km/h) and engine speed is 2,000 rpm or above for 5 seconds (continuously) after the abrupt deceleration.
- While turning the steering wheel with the vehicle speed of 1 mph (1 km/h) or less for 20 seconds, and the engine speed is 2,000 rpm or above for at least 10 seconds.
- When the engine speed is 500 rpm or less, and the vehicle is traveling at a speed of 6 mph (10 km/h) or more for about 3 seconds.

To determine the actual cause of the problem, question the customer about the conditions during which the problem occurred, taking the above conditions into consideration.

Diagnostic Trouble Code (DTC)

- If the CPU cannot be activated, or it fails, the EPS indicator comes on, but the DTC is not memorized.
- The memory can hold any number of DTCs. However, when the same DTC is detected more than once, the most recent DTC is written over the prior DTC, therefore only one occurrence is memorized.
- The lowest DTC is indicated first. The DTCs are indicated in ascending order, not in the order that they occurred.
- The DTCs are memorized in the EEPROM (non-volatile memory) therefore the memorized DTCs cannot be erased by disconnecting the battery. Do the specified procedures to clear the DTCs.

Self-diagnosis

Self-diagnosis can be classified into three categories:

- Initial diagnosis: Done right after the engine starts and until the EPS indicator goes off.
- Regular diagnosis: Done right after the initial diagnosis until the ignition switch is turned to LOCK (0).
- Steering diagnosis: Done during regular diagnosis while turning the steering wheel.

The EPS control unit does these functions when a problem is detected by self-diagnosis:

1. Turns on the EPS indicator.

2. Memorizes the DTC.

3. Stops power assist and manual steering operation resumes.

   NOTE: For DTCs 11-01, 11-02, 12-01, 21-01, 21-02, 22-01, and 35-04 the EPS indicator will go off automatically, and the system returns to normal.

(cont'd)

General Troubleshooting Information (cont'd)

Restriction on Power Assist Operation

Repeated extreme steering force, such as turning the steering wheel continuously back-and-forth with the vehicle stopped, causes an increase of power consumption in the EPS motor. The increase of electric current causes the EPS motor to heat up. Because this heat adversely affects the system, the control unit monitors the electric current of the EPS motor.

When the control unit detects heat build-up in the EPS motor, it reduces the electric current to the EPS motor gradually to protect the system, and it restricts the power assist operation. The EPS indicator does not come on during this function.

When steering torque is not applied to the steering wheel, or when the ignition is turned to LOCK (0) and the EPS motor cools, the control unit will restore the power assist gradually until it's fully restored (after about 8 minutes).

Torque Sensor Neutral Position

The EPS control unit stores the torque sensor neutral position in the EEPROM. The torque sensor neutral position must be memorized whenever the gearbox, the EPS motor, or the EPS control unit is replaced.

NOTE: The torque sensor neutral position is not effected when erasing the DTCs.

How to Troubleshoot DTCs

The troubleshooting procedures assume that the cause of the problem is still present and the EPS indicator is still on. Following the procedure when the EPS indicator does not come on can result in incorrect diagnosis.

1. Question the customer about the conditions when the problem occurred, and try to reproduce the same conditions for troubleshooting. Find out when the EPS indicator came on, such as while turning, after turning, when the vehicle was at a certain speed, etc.

2. When the EPS indicator does not come on during the test-drive, but troubleshooting is done based on the DTC, check for loose connectors, poor terminal contact, etc., in the affected circuit before you start troubleshooting.

3. After troubleshooting, clear the DTC and test-drive the vehicle. Be sure the EPS indicator does not come on.

How to Retrieve DTCs

1. With the ignition switch in LOCK (0), connect the HDS (Honda diagnostic system) to the DLC (data link connector) (A) located under the driver's side of the dashboard.

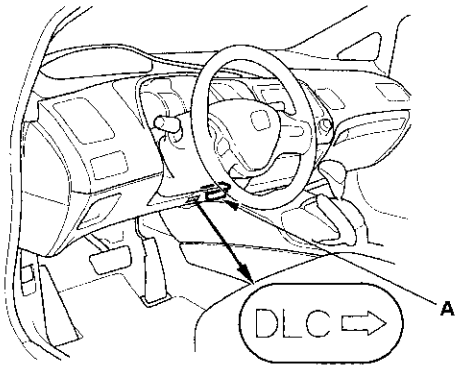

2. Turn the ignition switch to ON (II).

3. Make sure the HDS communicates with the vehicle and the EPS control unit. If it doesn't, troubleshoot the DLC circuit (see page 11-213).

4. Follow the prompts on the HDS to display the DTC(s) on the screen. After determining the DTC, refer to the DTC Troubleshooting.

   NOTE: See the HDS Help menu for specific instructions.

5. Turn the ignition switch to LOCK (0).

How to Clear DTCs

1. With the ignition switch in LOCK (0), connect the HDS to the DLC (data link connector) (A) located under the driver's side of the dashboard.

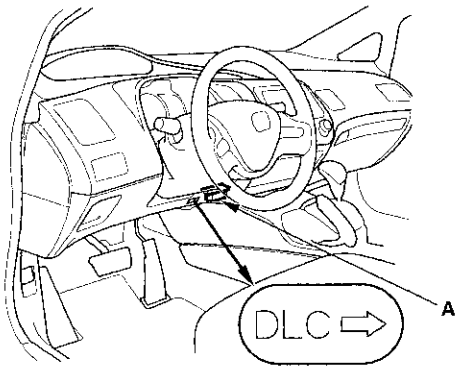

2. Turn the ignition switch to ON (II).

3. Make sure the HDS communicates with the vehicle and the EPS control unit. If it doesn't, troubleshoot the DLC circuit (see page 11-213).

4. Clear the DTC(s) by following the screen prompts on the HDS.

   NOTE: See the HDS Help menu for specific instructions.

5. Turn the ignition switch to LOCK (0).

Memorizing the Torque Sensor Neutral Position

The torque sensor neutral position must be memorized whenever the steering gearbox, the torque sensor, the EPS motor, or the EPS control unit is replaced. Note that the torque sensor neutral position is not affected when erasing the DTC.

NOTE: The torque sensor is temperature sensitive. When memorizing the torque sensor neutral position, the ambient temperature must be above 68 °F (20 °C).

1. With the ignition switch in LOCK (0), connect the HDS to the DLC (data link connector) (A) located under the driver's side of the dashboard.

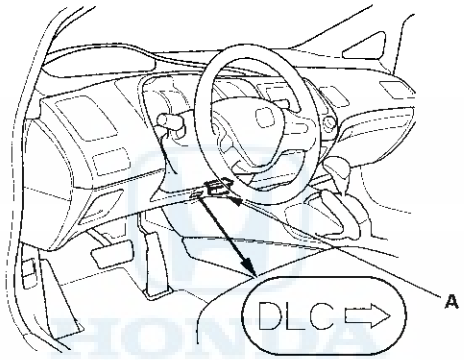

2. Turn the ignition switch to ON (II).

3. Make sure the HDS communicates with the vehicle and the EPS control unit. If it doesn't, troubleshoot the DLC circuit (see page 11-213).

4. From the EPS MENU, select MISCELLANEOUS TEST then TORQUE SENSOR LEARN and follow the screen prompts on the HDS.

   NOTE: See the HDS Help menu for specific instructions.

5. Turn the ignition switch to LOCK (0).

DTC Troubleshooting Index

DTC	Detection Item	Note
11-01	Low/High IG1-terminal Voltage (Initial Diagnosis)	(see page 17-33)
11-02	Low/High IG1-terminal Voltage (Regular Diagnosis)	(see page 17-33)
12-01	Low/High VBU Voltage (Regular Diagnosis)	(see page 17-34)
21-01	Excessive Change of the Vehicle Speed Signal (Regular Diagnosis)	(see page 17-35)
21-02	Comparison between the Vehicle Speed and the Engine Speed Signal (Regular Diagnosis)	(see page 17-35)
22-01	Engine Speed Signal (Initial Diagnosis)	(see page 17-37)
31-01	No writing the Torque Sensor Neutral Position (Initial Diagnosis)	(see page 17-22)
32-01	EPS Control Unit Internal Circuit (Current Sensor) (Initial Diagnosis)	(see page 17-39)
32-02	EPS Control Unit Internal Circuit (Current Sensor) (Regular Diagnosis)	(see page 17-39)
32-07	EPS Control Unit Internal Circuit (Current Sensor) (Steering Diagnosis)	(see page 17-40)
32-08	Current Sensor (Regular Diagnosis)	(see page 17-40)
32-09	Current Sensor (Initial Diagnosis)	(see page 17-40)
33-01	Lower FET Stuck ON (Initial Diagnosis)	(see page 17-42)
33-02	Upper FET Stuck ON (Initial Diagnosis)	(see page 17-43)
33-06	Lower FET Stuck ON (Regular Diagnosis)	(see page 17-42)
33-07	Upper FET Stuck ON (Regular Diagnosis)	(see page 17-43)
34-01	Power Relay Stuck ON (Ignition Switch is in LOCK (0))	(see page 17-45)
34-02	Fail-safe Relay Stuck ON (Initial Diagnosis)	(see page 17-45)
35-01	EPS Control Unit Internal Circuit (CPU) (Initial Diagnosis/Regular Diagnosis)	(see page 17-39)
35-02	EPS Control Unit Internal Circuit (EEPROM) (Initial Diagnosis)	(see page 17-39)
35-03	EPS Control Unit Internal Circuit (EPS CPU) (Initial Diagnosis)	(see page 17-46)
35-04	EPS Control Unit Internal Circuit (CPU Communication) (Regular Diagnosis)	(see page 17-39)
35-05	EPS Control Unit Internal Circuit (EPS Motor/EPS CPU) (Initial Diagnosis)	(see page 17-46)
35-06	EPS Control Unit Internal Circuit (ITN Communication) (Regular Diagnosis)	(see page 17-39)
35-07	EPS Control Unit Internal Circuit (INHL/INHR Ports) (Initial Diagnosis/ Regular Diagnosis)	(see page 17-39)

NOTE:
- Initial Diagnosis: Done right after the engine starts and until the EPS indicator goes off.
- Regular Diagnosis: Done right after the initial Diagnosis until the ignition switch is turned to LOCK (0).
- Steering Diagnosis: Done during regular Diagnosis while turning the steering wheel.

(cont'd)

DTC Troubleshooting Index (cont'd)

DTC	Detection Item	Note
36-02	EPS Control Unit Internal Circuit (INH Output Circuit) (Initial Diagnosis)	(see page 17-39)
37-01	EPS Control Unit Internal Circuit (Step-up Circuit) (Initial Diagnosis)	(see page 17-39)
51-01	Low/High Voltage for the Torque Sensor (VT1 and VT2) (Regular Diagnosis)	(see page 17-47)
51-02	Torque Sensor (VT3 Differential-amplification Function) (Regular Diagnosis)	(see page 17-50)
51-03	Torque Sensor (VT1, VT2 Rapid Change) (Regular Diagnosis)	(see page 17-50)
51-06	Torque Sensor (VT1, VT2 Average) (Regular Diagnosis)	(see page 17-50)
51-07	Torque Sensor (VT1, VT2 Initial Check) (Initial Diagnosis)	(see page 17-50)
61-04	Open/Short in the EPS Motor Harness (Steering Diagnosis)	(see page 17-53)
71-01	EPS Motor Angle Sensor (SIN/COS Signals) (Steering Diagnosis)	(see page 17-55)
71-02	EPS Motor Angle Sensor (Neutral Position Learning of SIN/COS) (Initial Diagnosis)	(see page 17-55)
71-03	EPS Motor Angle Sensor (SIN/COS Signals) (Steering Diagnosis)	(see page 17-55)
71-04	EPS Motor Angle Sensor (Check Signal) (Regular Diagnosis)	(see page 17-58)
71-05	EPS Motor Angle Sensor (SIN/COS Signals Changing Amount) (Steering Diagnosis)	(see page 17-55)
71-06	EPS Motor Angle Sensor (Neutral Position of SIN/COS) (Initial Diagnosis)	(see page 17-55)

NOTE:
- Initial Diagnosis: Done right after the engine starts and until the EPS indicator goes off.
- Regular Diagnosis: Done right after the initial Diagnosis until the ignition switch is turned to LOCK (0).
- Steering Diagnosis: Done during regular Diagnosis while turning the steering wheel.

HONDA

Symptom Troubleshooting Index

Symptom	Diagnostic procedure
HDS does not communicate with the EPS control unit or the vehicle	Troubleshoot the DLC circuit (see page 11-213)
EPS indicator does not come on	Symptom Troubleshooting (see page 17-60)
EPS indicator does not go off, and no DTCs are stored	Symptom Troubleshooting (see page 17-60)
EPS indicator is not on, no DTCs are stored, but there is no power assist or power assist is reduced	1. Check the EPS motor power wires between the EPS control unit and the EPS motor for a short to body ground. Repair as needed. 2. If the EPS motor power wires are OK, replace the EPS motor (short in the EPS motor) (see page 17-63). 3. Check the power and body ground connections at the EPS control unit.

HONDA

EPS Components

System Description

EPS Control Unit Inputs and Outputs for Connector A (2P)

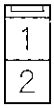

Wire side of female terminals

NOTE: Standard battery voltage is about 12 V.

Terminal number	Wire color	Terminal sign	Description	Signal
1	BLK	PG (Power ground)	Ground for the actuator EPS motor	Continuity to ground
2	WHT	+B (Plus battery)	Power source for the actuator EPS motor	Battery voltage at all times

EPS Control Unit Inputs and Outputs for Connector B (2P)

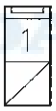

Wire side of female terminals

Terminal number	Wire color	Terminal sign	Description	Signal
1	GRN	H-W	Drives the actuator EPS motor	——

EPS Control Unit Inputs and Outputs for Connector C (2P)

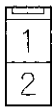

Wire side of female terminals

Terminal number	Wire color	Terminal sign	Description	Signal
1	RED	H-U	Drives the actuator EPS motor	——
2	BLU	H-V	Drives the actuator EPS motor	——

EPS Control Unit Inputs and Outputs for Connector D (28P)

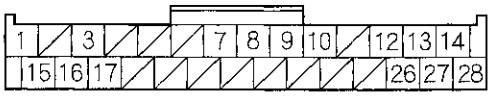

Wire side of female terminals

Terminal number	Wire color	Terminal sign	Description	Signal
1	WHT	CAN-H (CAN-HI)	CAN communication circuit	——
3	BLU	NEP (Engine pulse)	Detects tachometer signal	With engine running: pulses
7	BRN	SCS (Service check signal)	Detects service check connector signal	With service check signal not ground: battery voltage (about 12 V) at all times
8	LT GRN	VS2 (Voltage sensor 2)	Detects torque sensor signal	——
9	BRN	PVF (Voltage fade)	Drives the torque sensor	
10	GRN	VS1 (Voltage sensor 1)	Detects torque sensor signal	
12	PNK	S1 (Signal 1)	Detects EPS motor angle sensor signal	
13	BLU	R1 (EPS Motor angle sensor 1)	Detects EPS motor angle sensor signal	
14	BRN	S2 (Signal 2)	Detects EPS motor angle sensor signal	
15	RED	CAN-L (CAN-LO)	CAN communication circuit	
16	YEL *1 GRY *2	IG 1 (Ignition 1)	Power source for activating the system	With ignition switch ON (II): battery voltage (about 12 V)
17	LT BLU	K-LINE (Data link connector)	Communicates with HDS	With service check signal opened: about 5.0 V
26	BRN	S3 (Signal 3)	Detects EPS motor angle sensor signal	——
27	PNK	R2 (EPS Motor angle sensor 2)	Detects EPS motor angle sensor signal	
28	BLU	S4 (Signal 4)	Detects EPS motor angle sensor signal	

* 1: '06 model
* 2: '07-09 models

(cont'd)

System Description (cont'd)

EPS System Outline

The power steering system adopts the electric power steering assisting for the control force of the steering wheel in the driving force of the electric motor.

The EPS control unit is doing an appropriate steering force control according to the running situation of the vehicle (at time of low speed, lightness, by the control of emphasis and high-speed running time, control with the steady weight and the control which will be switched from low speed to high speed smoothly later) by the EPS motor.

The EPS control unit is designed for use with an automotive power steering for the primary purpose of controlling the assist motor (brushless motor) for the power steering by using as inputs the steering torque signals received from the "steering torque sensor" installed in the steering gearbox as well as the speed signals received from the "vehicle speed sensor" installed in the vehicle. In addition to the above function, the EPS control unit also provides the failsafe function, self diagnosis function and motor output limiting function.

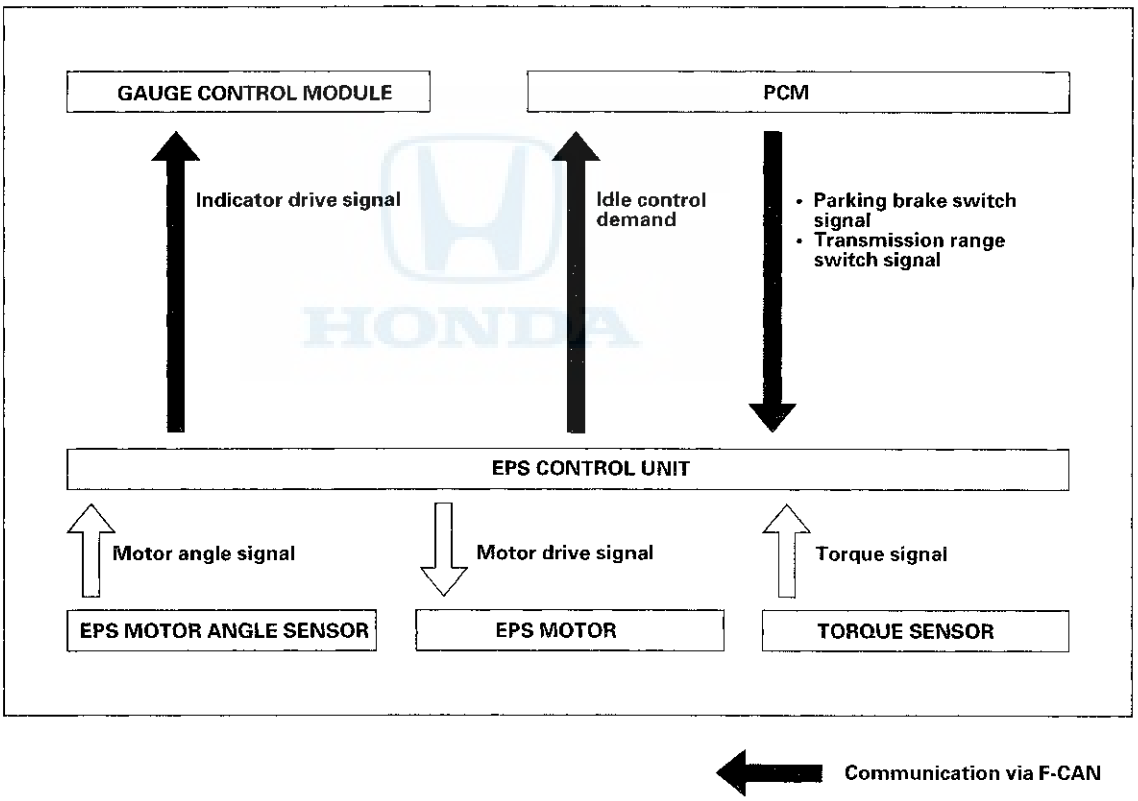

Communication via F-CAN

Steering Gearbox

The EPS motor engages with a pinion and one worm wheel gear, which is transmitted to a direct pinion, to move the rack.

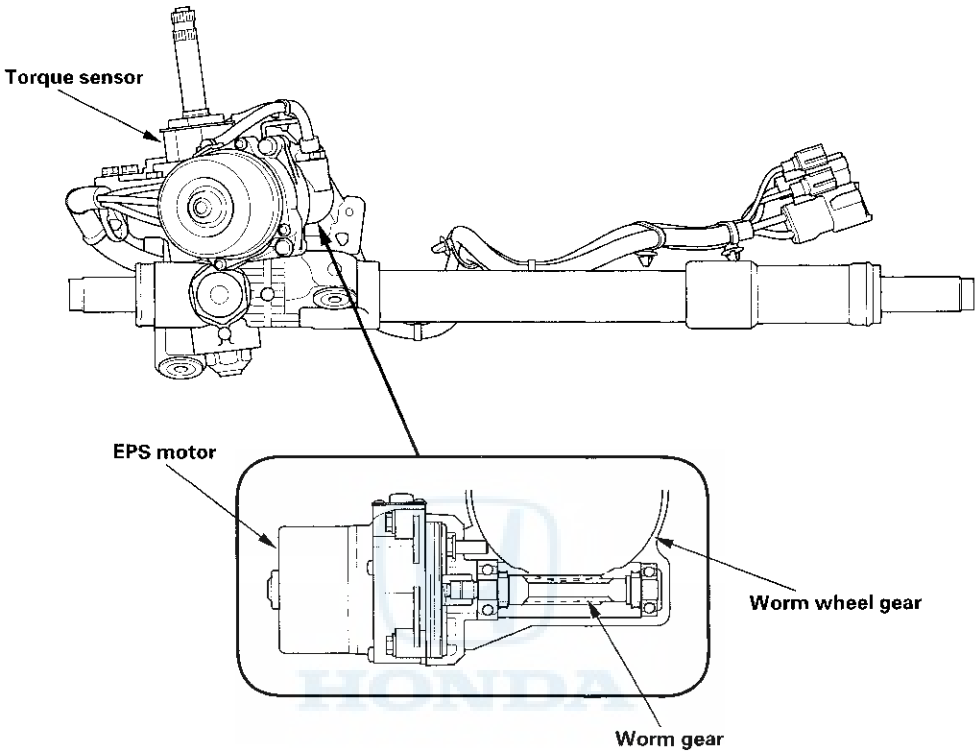

Torque Sensor

When the steering wheel is turned, twist occurs in the torsion bar between the steering side of the input shaft and the output shaft on the road reaction force side. Inductance is changed by the movement of the core. The amount this voltage changes (varies with the amount of movement, and direction of the core) is amplified with the interface circuitry of the sensor coil, and output to the EPS control unit as a steer signal.

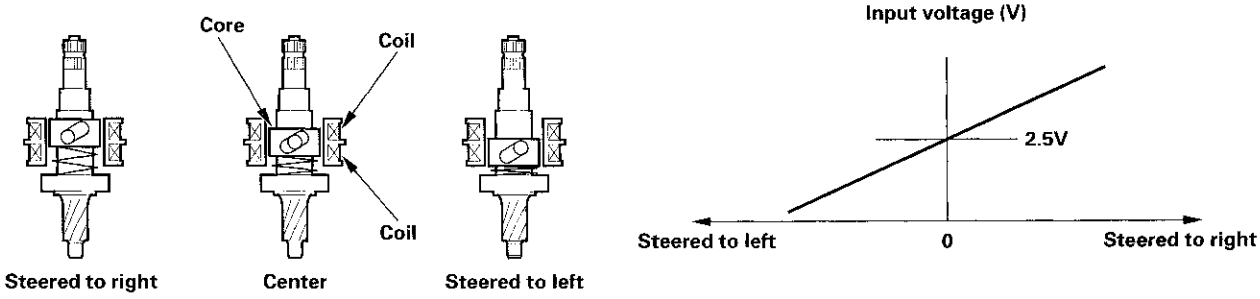

EPS Components

Circuit Diagram

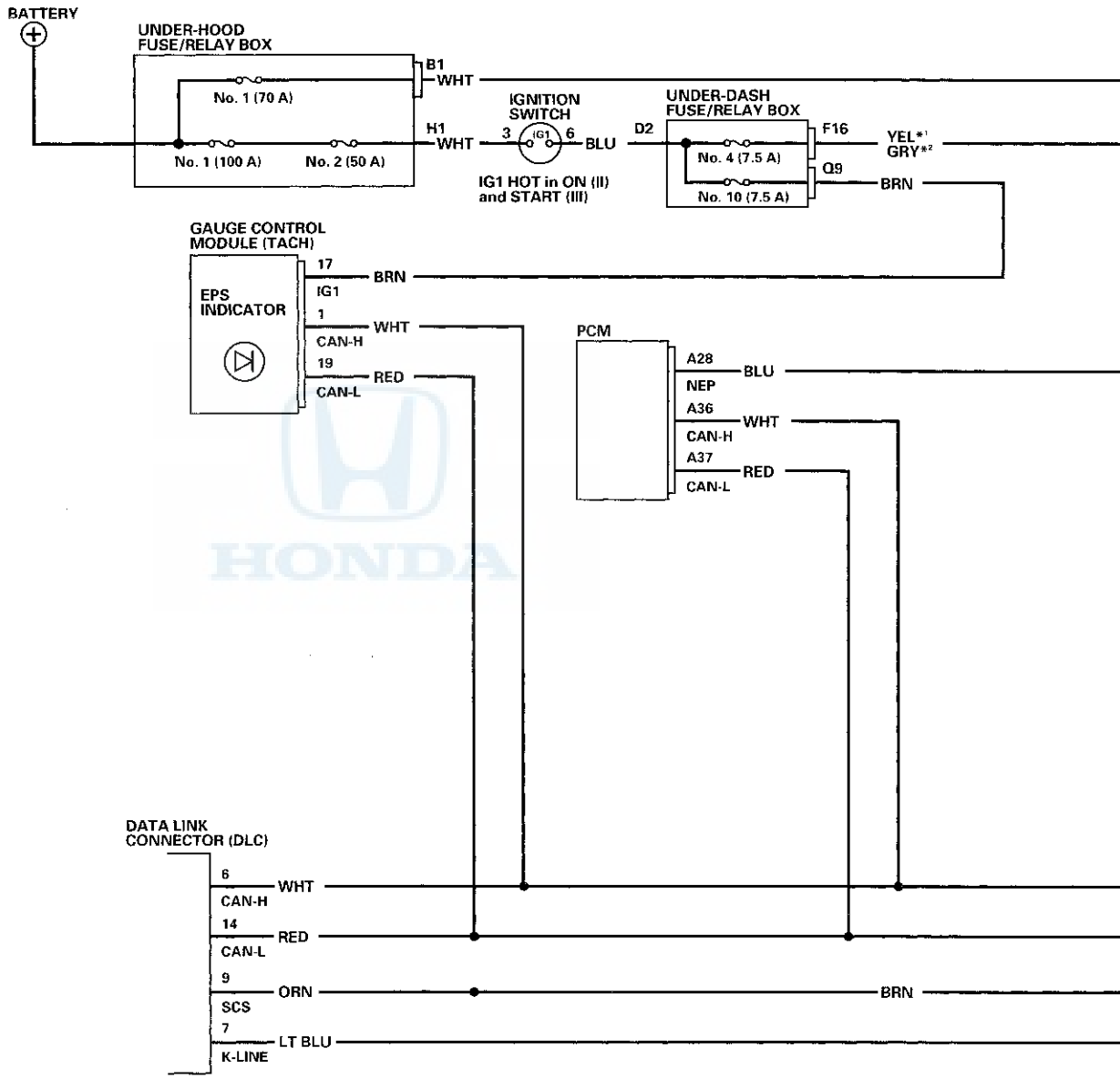

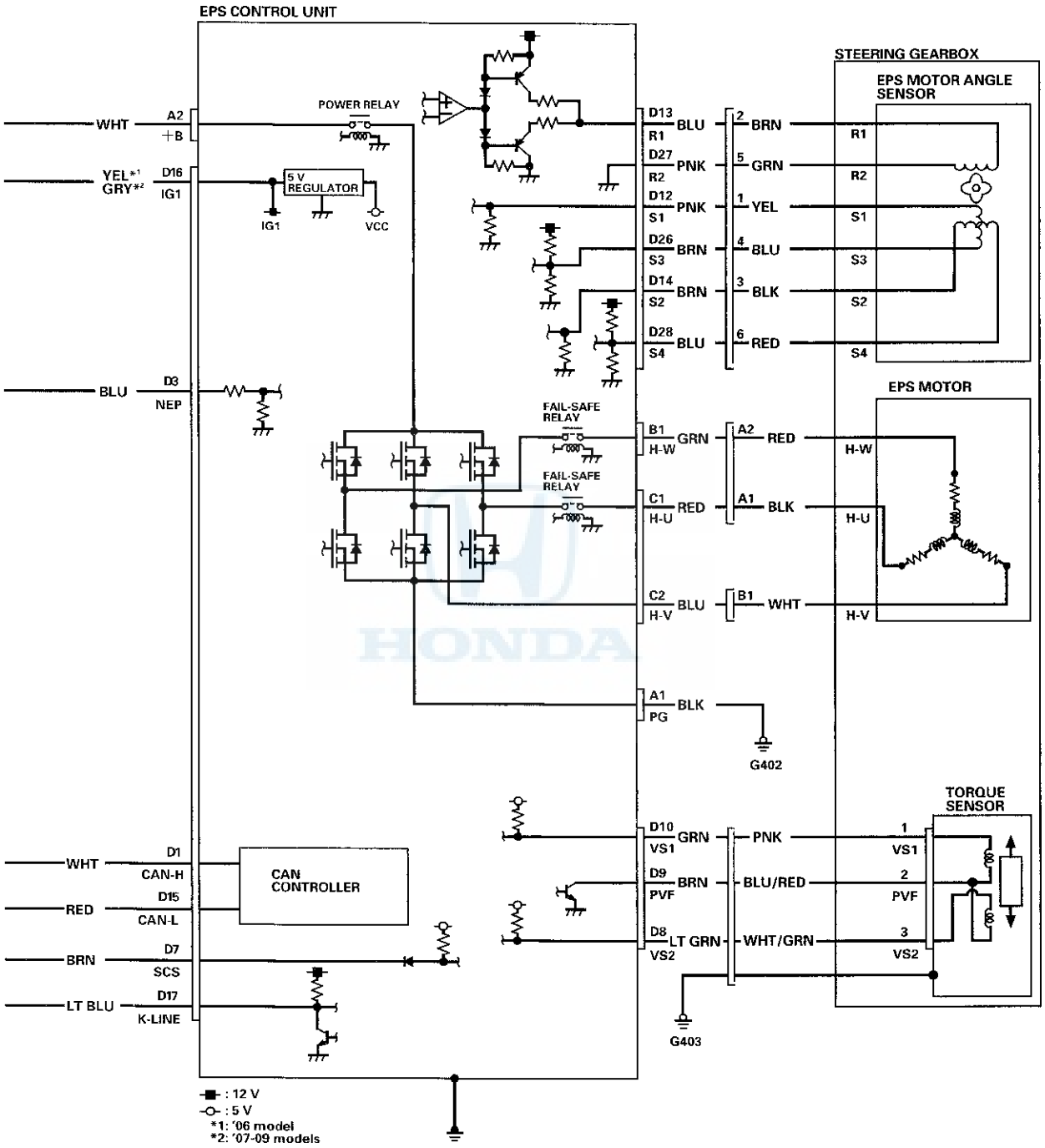
EPS CONTROL UNIT
STEERING GEARBOX
EPS MOTOR ANGLE SENSOR
POWER RELAY
WHT
A2
+B
YEL*1
GRY*2
D16
IG1
5 V REGULATOR
IG1
VCC
BLU
D3
NEP
D13
R1
BLU
2
BRN
R1
D27
R2
PNK
5
GRN
R2
D12
S1
PNK
1
YEL
S1
D26
S3
BRN
4
BLU
S3
D14
S2
BRN
3
BLK
S2
D28
S4
BLU
6
RED
S4
EPS MOTOR
FAIL-SAFE RELAY
FAIL-SAFE RELAY
B1
H-W
GRN
A2
RED
H-W
C1
H-U
RED
A1
BLK
H-U
C2
H-V
BLU
B1
WHT
H-V
A1
PG
BLK
G402
TORQUE SENSOR
WHT
D1
CAN-H
RED
D15
CAN-L
CAN CONTROLLER
BRN
D7
SCS
LT BLU
D17
K-LINE
D10
VS1
GRN
PNK
1
VS1
D9
PVF
BRN
BLU/RED
2
PVF
D8
VS2
LT GRN
WHT/GRN
3
VS2
G403
: 12 V
: 5 V
*1: '06 model
*2: '07-09 models

(cont'd)

Circuit Diagram (cont'd)

UNDER-HOOD FUSE/RELAY BOX CONNECTOR B (1P)

UNDER-DASH FUSE/RELAY BOX CONNECTOR Q (16P)

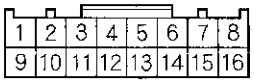

Wire side of female terminals

UNDER-DASH FUSE/RELAY BOX CONNECTOR F (34P)

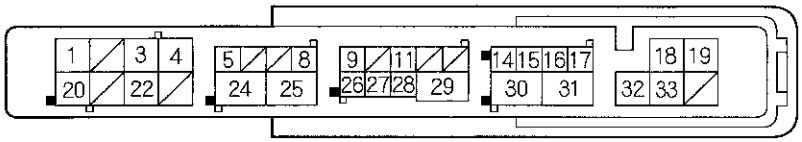

Wire side of female terminals

GAUGE CONTROL MODULE (TACH) 36P CONNECTOR

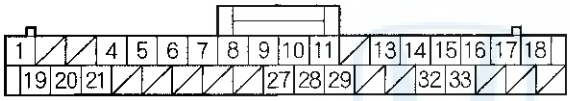

EPS CONTROL UNIT CONNECTOR A (2P)

EPS CONTROL UNIT CONNECTOR B (2P)

Wire side of female terminals

EPS CONTROL UNIT CONNECTOR C (2P)

EPS CONTROL UNIT CONNECTOR D (28P)

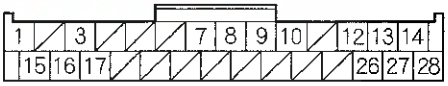

Wire side of female terminals

TORQUE SENSOR 3P CONNECTOR

EPS MOTOR CONNECTOR A (2P)

EPS MOTOR CONNECTOR B (1P)

EPS MOTOR ANGLE SENSOR 6P CONNECTOR

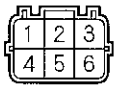

Terminal side of male terminals

PCM CONNECTOR A (44P)

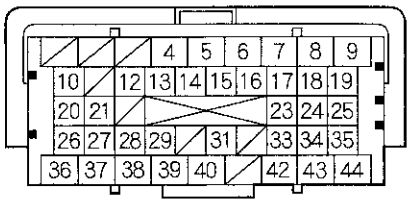

DATA LINK CONNECTOR (DLC)

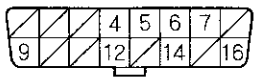

Terminal side of female terminals

DTC Troubleshooting

DTC 11-01: Low/High IG1-terminal Voltage (Initial Diagnosis)

DTC 11-02: Low/High IG1-terminal Voltage (Regular Diagnosis)

1. Turn the ignition switch to ON (II).
2. Clear the DTC with the HDS.
3. Turn the ignition switch to LOCK (0).
4. Start the engine.
5. Wait at least 60 seconds.

   Does the EPS indicator come on?

   YES—Go to step 6.

   NO—Check for loose terminals or poor connections. If the connections are good, the system is OK at this time.■

6. Turn the ignition switch to LOCK (0).
7. Disconnect EPS control unit connector D (28P).
8. Turn the ignition switch to ON (II).
9. Wait at least 60 seconds.
10. Measure the voltage between EPS control unit connector D (28P) terminals No. 16 and body ground.

EPS CONTROL UNIT CONNECTOR D (28P)

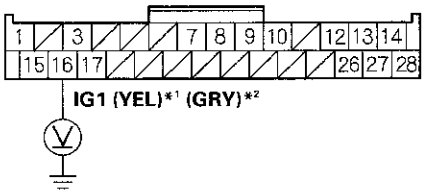

***1 : '06 model**
***2 : '07-09 models**

Wire side of female terminals

Is there battery voltage?

YES—Check for loose terminals in the EPS control unit connectors, and repair if necessary. If no poor connections are found, replace the EPS control unit (see page 17-82).■

NO—If there is no voltage, or the voltage is lower than specified, repair an open or high resistance in the wire between the No. 4 (7.5 A) fuse in the under-dash fuse/relay box and EPS control unit. If the wire checks OK, check for a poor connection at the 12 V battery (see page 22-61). If they are good, go to the charging system indicator circuit troubleshooting (see page 12-179).■

DTC Troubleshooting (cont'd)

DTC 12-01: Low-High VBU Voltage (Regular Diagnosis)

1. Turn the ignition switch to ON (II).
2. Check the BATTERY in the EPS DATA LIST with the HDS.

   Is the voltage at 9.2– 17.4 V?

   YES—Check for loose terminals or poor connections. If the connections are good, the system is OK at this time. ■

   NO—Go to step 3.
3. Turn the ignition switch to LOCK (0).
4. Check the No. 1 (70 A) fuse in the under-hood fuse/relay box.

   Is the fuse OK?

   YES—Reinstall the checked fuse, then go to step 13.

   NO—Go step 5.
5. Disconnect the EPS control unit connector A (2P).
6. Check for continuity between EPS control unit connector A (2P) terminal No. 2 and body ground.

EPS CONTROL UNIT CONNECTOR A (2P)

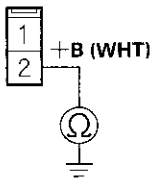

Wire side of female terminals

Is there continuity?

YES—Repair short to body ground in the wire between the EPS control unit and the No. 1 (EPS) (70 A) fuse in the under-hood fuse/relay box. ■

NO—Install a new No. 1 (EPS) (70 A) fuse in the under-hood fuse/relay box, then go to step 7.

7. Reconnect the EPS control unit connector A (2P).
8. Turn the ignition switch to ON (II).
9. Clear the DTC with the HDS.
10. Turn the ignition switch to LOCK (0).
11. Start the engine.
12. Check for DTCs with the HDS.

    Is DTC 12-01 indicated?

    YES—Replace the EPS control unit (see page 17-82). ■

    NO—Troubleshooting is complete. If any other DTCs are indicated, go to the indicated DTC's troubleshooting. ■
13. Disconnect EPS control unit connector A (2P) and connector D (28P).
14. Measure the voltage between EPS control unit connector A (2P) terminal No. 2 and body ground.

EPS CONTROL UNIT CONNECTOR A (2P)

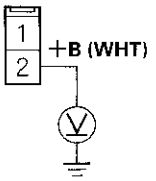

Wire side of female terminals

Is there battery voltage?

YES—Check for loose terminals in the EPS control unit connectors, and repair if necessary. If no poor connections are found, replace the EPS control unit (see page 17-82). ■

NO—Repair open in the wire between the EPS control unit and the No. 1 (70 A) fuse in the under-hood fuse/relay box. ■

DTC 21-01: Excessive Change of the Vehicle Speed Signal (Regular Diagnosis)

DTC 21-02: Comparison between the Vehicle Speed and the Engine Speed Signal (Regular Diagnosis)

NOTE:
- If the MIL is on, troubleshoot the fuel and emissions systems first.
- Even though the system is operating normally, the EPS indicator will come on caused by the detecting condition of DTC 21-01 or DTC 21-02 when you raise the engine speed with the vehicle stopped.
- Clear the DTC related to the ABS or VSA.

1. Turn the ignition switch to LOCK (0).

2. Raise the vehicle, and support it with safety stands in the proper locations (see page 1-10), and allow all wheels to rotate freely.

3. Connect the HDS to the data link connector (DLC).

4. VSA: Turn off the VSA by using the VSA OFF switch.

5. Start the engine, test the vehicle while in the D position.

6. Check the VEHICLE SPEED in the EPS DATA LIST with the HDS.

   Is the vehicle speed indicated?

   YES—The system is OK at this time.■

   NO—Go to step 7.

7. Check for DTCs in the A/T system with the HDS.

   Is DTC P0721 or P0722 indicated?

   YES—Troubleshoot the indicated DTC(s).■

   NO—Go to step 8.

8. Start the engine, and check the tachometer.

   Is the tachometer working correctly?

   YES—Go to step 9.

   NO—Troubleshoot the gauge control module (tach) (see page 22-223).■

9. Turn the ignition switch to LOCK (0).

10. Short the SCS line with the HDS.

11. Disconnect PCM connector A (44P) and EPS control unit connector D (28P).

(cont'd)

DTC Troubleshooting (cont'd)

12. Check for continuity between EPS control unit connector D (28P) terminal No. 1 and PCM connector A (44P) terminal No. 36.

EPS CONTROL UNIT CONNECTOR D (28P)
Wire side of female terminals

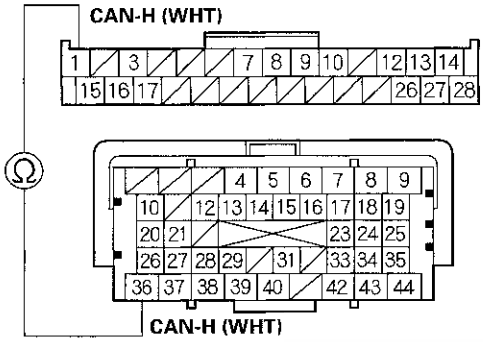

PCM CONNECTOR A (44P)
Terminal side of female terminals

Is there continuity?

YES—Go to step 13.

NO—Repair open in the wire between the EPS control unit and the PCM.■

13. Check for continuity between EPS control unit connector D (28P) terminal No. 15 and PCM connector A (44P) terminal No. 37.

EPS CONTROL UNIT CONNECTOR D (28P)
Wire side of female terminals

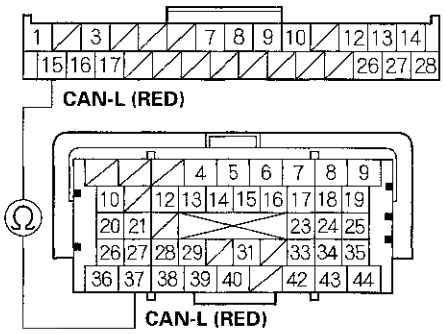

PCM CONNECTOR A (44P)
Terminal side of female terminals

Is there continuity?

YES—Check for loose terminals in the EPS control unit connectors, and repair if necessary. If no poor connections are found, replace the EPS control unit (see page 17-82).■

NO—Repair open in the wire between the EPS control unit and the PCM.■

DTC 22-01: Engine Speed Signal (Initial Diagnosis)

NOTE: If the MIL is on, troubleshoot the fuel and emissions systems first.

1. Turn the ignition switch to LOCK (0).
2. Connect the HDS to the data link connector (DLC).
3. Start the engine.
4. Check the ENGINE SPEED in the EPS DATA LIST with the HDS.

   Is there 0 rpm at idle?

   YES—Go to step 5.

   NO—The system is OK at this time. ■

5. Turn the ignition switch to LOCK (0).
6. Disconnect EPS control unit connector D (28P).
7. Start the engine.
8. Measure the voltage between EPS control unit connector D (28P) terminal No. 3 and body ground.

EPS CONTROL UNIT CONNECTOR D (28P)

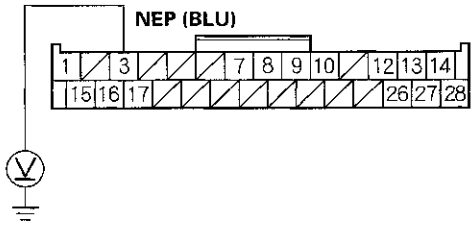

Wire side of female terminals

Is there any voltage?

YES—Check for loose terminals in the EPS control unit connectors, and repair if necessary. If no poor connections are found, replace the EPS control unit (see page 17-82). ■

NO—Go to step 9.

(cont'd)

DTC Troubleshooting (cont'd)

9. Turn the ignition switch to LOCK (0).
10. Short the SCS line with the HDS.
11. Disconnect PCM connector A (44P).
12. Check for continuity between EPS control unit connector D (28P) terminal No. 3 and body ground.

EPS CONTROL UNIT CONNECTOR D (28P)

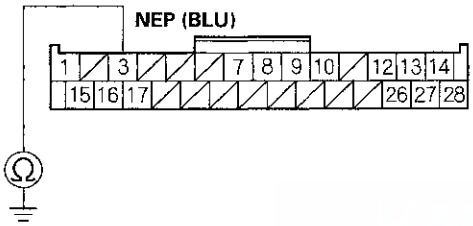

Wire side of female terminals

Is there continuity?

YES—Repair short to body ground in the wire between the EPS control unit and the PCM.■

NO—Go to step 13.

13. Check for continuity between EPS control unit connector D (28P) terminal No. 3 and PCM connector A (44P) terminal No. 28.

EPS CONTROL UNIT CONNECTOR D (28P)
Wire side of female terminals

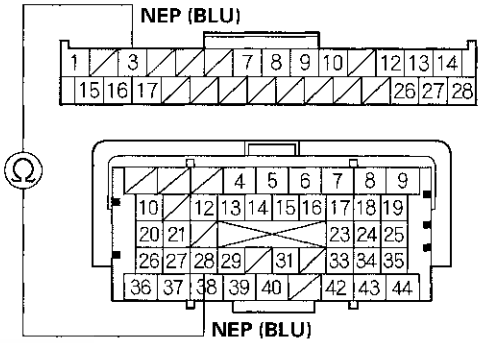

PCM CONNECTOR A (44P)
Terminal side of female terminals

Is there continuity?

YES—Update the PCM if it does not have the latest software (see page 11-236), or substitute a known-good PCM (see page 11-7), then go to step 1 and check. If the PCM was updated and DTCs are not indicated, troubleshooting is complete. If the PCM was substituted and DTCs are not indicated, replace the original PCM (see page 11-238).■

NO—Repair open in the wire between the EPS control unit and the PCM.■

DTC 32-01: EPS Control Unit Internal Circuit (Current Sensor) (Initial Diagnosis)

DTC 32-02: EPS Control Unit Internal Circuit (Current Sensor) (Regular Diagnosis)

DTC 35-01: EPS Control Unit Internal Circuit (CPU) (Initial Diagnosis/Regular Diagnosis)

DTC 35-02: EPS Control Unit Internal Circuit (EEPROM) (Initial Diagnosis)

DTC 35-04: EPS Control Unit Internal Circuit (CPU Communication) (Regular Diagnosis)

DTC 35-06: EPS Control Unit Internal Circuit (ITN Communication) (Regular Diagnosis)

DTC 35-07: EPS Control Unit Internal Circuit (INHL/INHR Ports) (Initial Diagnosis/Regular Diagnosis)

DTC 36-02: EPS Control Unit Internal Circuit (INH Output Circuit) (Initial Diagnosis)

DTC 37-01: EPS Control Unit Internal Circuit (Step-up Circuit) (Initial Diagnosis)

1. Turn the ignition switch to ON (II).
2. Clear the DTC with the HDS.
3. Turn the ignition switch to LOCK (0).
4. Start the engine.

   Does the EPS indicator come on?

   YES—Go to step 5.

   NO—Check for loose terminals or poor connections. If the connections are good, the system is OK at this time.■

5. Check for DTCs with the HDS.

   Is DTC 32-01, 32-02, 35-01, 35-02, 35-04, 35-06, 35-07, 36-02, or 37-01 indicated?

   YES—Check for loose terminals in the EPS control unit connectors, and repair if necessary. If no poor connections are found, replace the EPS control unit (see page 17-82).■

   NO—Troubleshoot the indicated DTC. If there are no DTCs, the system is OK at this time.■

DTC Troubleshooting (cont'd)

DTC 32-07: EPS Control Unit Internal Circuit (Current Sensor) (Steering Diagnosis)

1. Turn the ignition switch to ON (II).
2. Clear the DTC with the HDS.
3. Turn the ignition switch to LOCK (0).
4. Start the engine.
5. Turn the steering wheel to the right or left, and wait 10 seconds or more.

   Does the EPS indicator come on?

   YES—Go to step 6.

   NO—Check for loose terminals or poor connections. If the connections are good, the system is OK at this time.■

6. Check for DTCs with the HDS.

   Is DTC 32-07 indicated?

   YES—Check for loose terminals in the EPS control unit connectors, and repair if necessary. If no poor connections are found, replace the EPS control unit (see page 17-82).■

   NO—Troubleshoot the indicated DTC. If there are no DTCs, the system is OK at this time.■

DTC 32-08: Current Sensor (Regular Diagnosis)

DTC 32-09: Current Sensor (Initial Diagnosis)

1. Turn the ignition switch to ON (II).
2. Clear the DTC with the HDS.
3. Turn the ignition switch to LOCK (0).
4. Start the engine.
5. Turn the steering wheel to the right or left, and wait 10 seconds or more.

   Does the EPS indicator come on?

   YES—Go to step 6.

   NO—Check for loose terminals or poor connections. If the connections are good, the system is OK at this time.■

6. Check for DTCs with the HDS.

   Is DTC 32-08 or 32-09 indicated?

   YES—Go to step 7.

   NO—Troubleshoot the indicated DTC. If there are no DTCs, the system is OK at this time.■

7. Turn the ignition switch to LOCK (0).

8. Disconnect EPS control unit connector B (2P) and connector C (2P).

9. Check for continuity between the following terminals of the EPS control unit connector B (2P) and connector C (2P).

EPS CONTROL UNIT CONNECTOR B	EPS CONTROL UNIT CONNECTOR C
No. 1	No. 1
No. 1	No. 2
	No. 1
	No. 2

EPS CONTROL UNIT CONNECTOR B (2P)
Wire side of female terminals

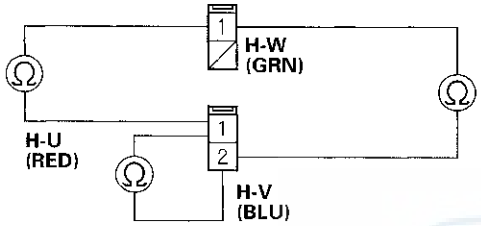

EPS CONTROL UNIT CONNECTOR C (2P)
Wire side of female terminals

Is there continuity?

YES—Check for loose terminals in the EPS control unit connectors and EPS motor connectors, and repair if necessary. If no poor connections are found, replace the EPS control unit (see page 17-82). ■

NO—Go to step 10.

10. Disconnect EPS motor connector B (1P) and EPS motor connector A (2P).

11. On the EPS motor side, check for continuity between EPS motor connector B (1P) and EPS motor connector A (2P).

EPS MOTOR CONNECTOR B (1P)	EPS MOTOR CONNECTOR A (2P)
	No. 1
	No. 2
No. 1	No. 1
No. 1	No. 2

EPS MOTOR CONNECTOR B (1P)
Terminal side of male terminals

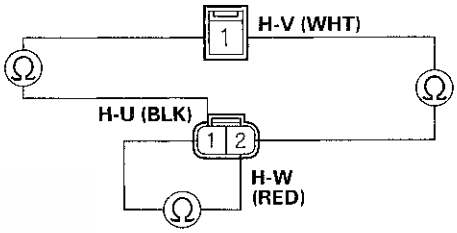

EPS MOTOR CONNECTOR A (2P)
Terminal side of male terminals

Is there continuity?

YES—Repair open in the wire between the EPS control unit and the EPS motor. ■

NO—Open in the EPS motor wire, or the EPS motor internal circuit, replace the EPS motor (see page 17-63). ■

DTC Troubleshooting (cont'd)

DTC 33-01: Lower FET Stuck ON (Initial Diagnosis)

DTC 33-06: Lower FET Stuck ON (Regular Diagnosis)

1. Turn the ignition switch to ON (II).
2. Clear the DTC with the HDS.
3. Turn the ignition switch to LOCK (0).
4. Start the engine.

   Does the EPS indicator come on?

   YES—Go to step 5.

   NO—Check for loose terminals or poor connections. If the connections are good, the system is OK at this time. ■

5. Check for DTCs with the HDS.

   Is DTC 33-01 or 33-06 indicated?

   YES—Go to step 6.

   NO—Troubleshoot the indicated DTC. If there are no DTCs, the system is OK at this time. ■

6. Turn the ignition switch to LOCK (0).
7. Disconnect EPS control unit connector B (2P) and connector C (2P).
8. Check for continuity between body ground and EPS control unit connector B (2P) terminal No. 1, connector C (2P) terminal No. 1, and connector C (2P) terminal No. 2 individually.

EPS CONTROL UNIT CONNECTOR B (2P)

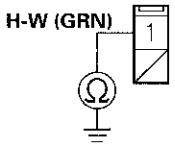

Wire side of female terminals

EPS CONTROL UNIT CONNECTOR C (2P)

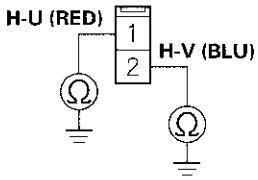

Wire side of female terminals

Is there continuity?

YES—Go to step 9.

NO—Check for loose terminals in the EPS control unit connectors, and repair if necessary. If no poor connections are found, replace the EPS control unit (see page 17-82).

9. Disconnect EPS motor connector B (1P) and EPS motor connector A (2P).

10. Check for continuity between body ground and EPS control unit connector B (2P) terminal No. 1, connector C (2P) terminal No. 1, and connector C (2P) terminal No. 2 individually.

EPS CONTROL UNIT CONNECTOR B (2P)

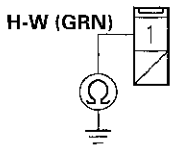

Wire side of female terminals

EPS CONTROL UNIT CONNECTOR C (2P)

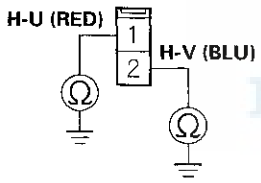

Wire side of female terminals

Is there continuity?

YES—Repair short to body ground in the wire between the EPS control unit and EPS motor. ■

NO—Short to body ground in the EPS motor wire; or a short in the EPS motor internal circuit, replace the EPS motor (see page 17-63). ■

DTC 33-02: Upper FET Stuck ON (Initial Diagnosis)

DTC 33-07: Upper FET Stuck ON (Regular Diagnosis)

1. Turn the ignition switch to ON (II).

2. Clear the DTC with the HDS.

3. Turn the ignition switch to LOCK (0).

4. Start the engine.

   Does the EPS indicator come on?

   YES—Go to step 5.

   NO—Check for loose terminals or poor connections. If the connections are good, the system is OK at this time. ■

5. Check for DTCs with the HDS.

   Is DTC 33-02 or 33-07 indicated?

   YES—Go to step 6.

   NO—Troubleshoot the indicated DTC. If there are no DTCs, the system is OK at this time. ■

6. Turn the ignition switch to LOCK (0).

7. Disconnect EPS control unit connector B (2P) and connector C (2P).

8. Turn the ignition switch to ON (II).

(cont'd)

DTC Troubleshooting (cont'd)

9. Measure the voltage between body ground and EPS control unit connector B (2P) terminal No. 1, connector C (2P) terminal No. 1, and connector C (2P) terminal No. 2 individually.

EPS CONTROL UNIT CONNECTOR B (2P)

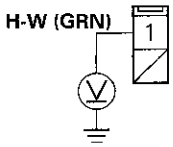

Wire side of female terminals

EPS CONTROL UNIT CONNECTOR C (2P)

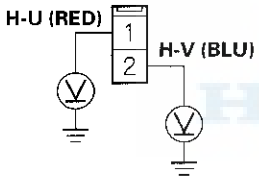

Wire side of female terminals

Is there battery voltage?

YES—Go to step 10.

NO—Check for loose terminals at the EPS control unit connectors and the EPS motor connectors, and repair if necessary. If no poor connections are found, replace the EPS control unit (see page 17-82). ■

10. Turn the ignition switch to LOCK (0).

11. Disconnect EPS motor connector B (1P) and EPS motor connector A (2P).

12. Turn the ignition switch to ON (II).

13. Measure the voltage between body ground and EPS control unit connector B (2P) terminal No. 1, connector C (2P) terminal No. 1, and connector C (2P) terminal No. 2 individually.

EPS CONTROL UNIT CONNECTOR B (2P)

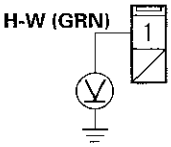

Wire side of female terminals

EPS CONTROL UNIT CONNECTOR C (2P)

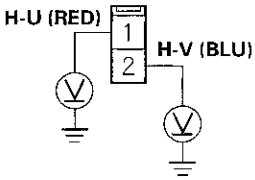

Wire side of female terminals

Is there battery voltage?

YES—Repair short to power in the wire between the EPS control unit and the EPS motor. ■

NO—Short to power in the EPS motor wire; or a short in the EPS motor internal circuit, replace the EPS motor (see page 17-63). ■

DTC 34-01: Power Relay Stuck ON (IG Switch is in LOCK (0))

1. Turn the ignition switch to ON (II).
2. Clear the DTC with the HDS.
3. Turn the ignition switch to LOCK (0).
4. Turn the ignition switch to ON (II).

   Does the EPS indicator come on?

   YES—Go to step 5.

   NO—Check for loose terminals or poor connections. If the connections are good, the system is OK at this time.■

5. Check for DTCs with the HDS.

   Is DTC 34-01 indicated?

   YES—Check for loose terminals in the EPS control unit connectors, and repair if necessary. If no poor connections are found, replace the EPS control unit (see page 17-82).■

   NO—Troubleshoot the indicated DTC. If there are no DTCs, the system is OK at this time.■

DTC 34-02: Fail-safe Relay Stuck ON (Initial Diagnosis)

1. Turn the ignition switch to ON (II).
2. Clear the DTC with the HDS.
3. Turn the ignition switch to LOCK (0).
4. Turn the ignition switch to ON (II).

   Does the EPS indicator come on?

   YES—Go to step 5.

   NO—Check for loose terminals or poor connections. If the connections are good, the system is OK at this time.■

5. Check for DTCs with the HDS.

   Is DTC 34-02 indicated?

   YES—Go to step 6.

   NO—Troubleshoot the indicated DTC. If there are no DTCs, the system is OK at this time.■

6. Turn the ignition switch to LOCK (0).
7. Disconnect EPS control unit connector B (2P) and connector C (2P).
8. Turn the ignition switch to ON (II).

(cont'd)

DTC Troubleshooting (cont'd)

9. Measure the voltage between body ground and EPS control unit connector B (2P) terminal No. 1, connector C (2P) terminal No. 1, and connector C (2P) terminal No. 2 individually.

EPS CONTROL UNIT CONNECTOR B (2P)

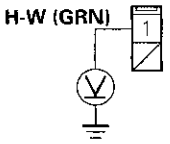

Wire side of female terminals

EPS CONTROL UNIT CONNECTOR C (2P)

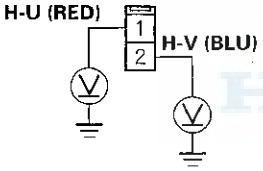

Wire side of female terminals

Is there battery voltage?

YES—Repair short to power in the wire between the EPS control unit and the EPS motor.■

NO—Replace the EPS control unit (see page 17-82). ■

DTC 35-03: EPS Control Unit Internal Circuit (EPS CPU) (Initial Diagnosis)

DTC 35-05: EPS Control Unit Internal Circuit (EPS Motor/EPS CPU) (Initial Diagnosis)

1. Turn the ignition switch to ON (II).
2. Clear the DTC with the HDS.
3. Turn the ignition switch to LOCK (0).
4. Turn the ignition switch to ON (II).

   Does the EPS indicator come on?

   YES—Go to step 5.

   NO—Check for loose terminals or poor connections. If the connections are good, the system is OK at this time.■

5. Start the engine.
6. Wait 10 seconds or more.
7. Check for DTCs with the HDS.

   Is DTC 35-03 or 35-05 indicated?

   YES—Check for loose terminals in the EPS control unit connectors, and repair if necessary. If no poor connections are found, replace the EPS control unit (see page 17-82).■

   NO—Troubleshoot the indicated DTC. If there are no DTCs, the system is OK at this time.■

DTC 51-01: Low/High Voltage for the Torque Sensor (VT1 and VT2) (Regular Diagnosis)

1. Turn the ignition switch to LOCK (0).
2. Connect the HDS to the data link connector (DLC).
3. Turn the ignition switch to ON (II).
4. Check the ADVT1 in the EPS DATA LIST with the HDS.

   Is the voltage at 0.90–3.55 V?

   YES—Go to step 5.

   NO—Go to step 6.

5. Check the ADVT2 in the EPS DATA LIST with the HDS.

   Is the voltage at 1.02–3.73 V?

   YES—Check for loose terminals or poor connections. If the connections are good, the system is OK at this time.■

   NO—Go to step 6.

6. Turn the ignition switch to LOCK (0).
7. Disconnect EPS control unit connector D (28P).
8. Measure the resistance between EPS control unit connector D (28P) terminals No. 9 and No. 10.

EPS CONTROL UNIT CONNECTOR D (28P)

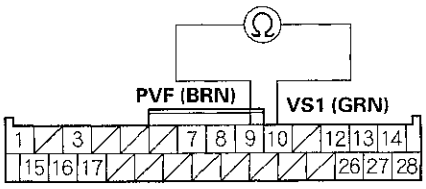

Wire side of female terminals

Is the resistance between 12–15 Ω?

YES—Go to step 9.

NO—Go to step 13.

(cont'd)

DTC Troubleshooting (cont'd)

9. Measure the resistance between EPS control unit connector D (28P) terminals No. 8 and No. 9.

EPS CONTROL UNIT CONNECTOR D (28P)

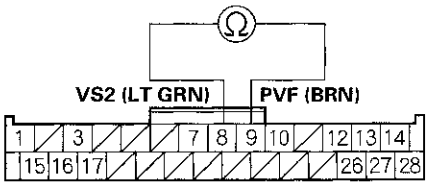

Wire side of female terminals

Is the resistance between 12–15 Ω ?

YES—Go to step 10.

NO—Go to step 15.

10. Check for continuity between EPS control unit connector D (28P) terminal No. 9 and body ground.

EPS CONTROL UNIT CONNECTOR D (28P)

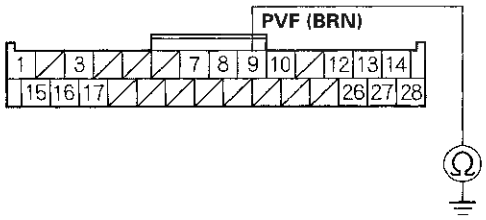

Wire side of female terminals

Is there continuity?

YES—Go to step 11.

NO—Check for loose terminals in the EPS control unit connectors, and repair if necessary. If no poor connections are found, replace the EPS control unit (see page 17-82). ■

11. Disconnect the torque sensor 3P connector from the steering gearbox.

12. Check for continuity between EPS control unit connector D (28P) terminal No. 9 and body ground.

EPS CONTROL UNIT CONNECTOR D (28P)

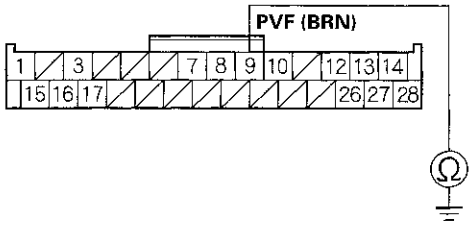

Wire side of female terminals

Is there continuity?

YES—Repair short to body ground in the wire between the torque sensor and the EPS control unit. ■

NO—Faulty torque sensor (short in the sensor internal circuit), replace the steering gearbox (see page 17-65). ■

13. Disconnect the torque sensor 3P connector from the steering gearbox.

14. On the sensor side, measure the resistance between torque sensor terminals No. 1 and No. 2.

TORQUE SENSOR 3P CONNECTOR

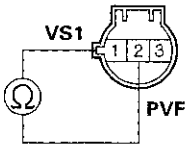

Terminal side of male terminals

Is the resistance between 12– 15 Ω ?

YES—Repair open or short between the PNK and BLU/RED wires in the torque sensor circuit between the torque sensor and the EPS control unit. ■

NO—Faulty torque sensor (short or open in the internal circuit), replace the steering gearbox (see page 17-65). ■

15. Disconnect the torque sensor 3P connector from the steering gearbox.

16. On the sensor side, measure the resistance between torque sensor terminals No. 2 and No. 3.

TORQUE SENSOR 3P CONNECTOR

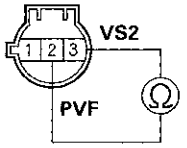

Terminal side of male terminals

Is the resistance between 12– 15 Ω ?

YES—Repair open or short between the WHT/GRN and BLU/RED wires in the torque sensor circuit between the torque sensor and the EPS control unit. ■

NO—Faulty torque sensor (short or open in the internal circuit), replace the steering gearbox (see page 17-65). ■

DTC Troubleshooting (cont'd)

DTC 51-02: Torque Sensor (VT3 Differential-amplification Function) (Regular Diagnosis)

DTC 51-03: Torque Sensor (VT1, VT2 Rapid-change) (Regular Diagnosis)

DTC 51-06: Torque Sensor (VT1, VT2 Average) (Regular Diagnosis)

DTC 51-07: Torque Sensor (VT1, VT2 Initial Check) (Initial Diagnosis)

1. Turn the ignition switch to ON (II).
2. Clear the DTC with the HDS.
3. Turn the ignition switch to LOCK (0).
4. Start the engine.

   Does the EPS indicator come on?

   YES—Go to step 5.

   NO—Check for loose terminals or poor connections. If the connections are good, the system is OK at this time.■

5. Check for DTCs with the HDS.

   Is DTC 51-02, 51-03, 51-06, or 51-07 indicated?

   YES—Go to step 6.

   NO—Troubleshoot the indicated DTC. If there are no DTCs, the system is OK at this time.■

6. Turn the ignition switch to LOCK (0).
7. Disconnect EPS control unit connector D (28P).
8. Measure the resistance between EPS control unit connector D (28P) terminals No. 9 and No. 10.

EPS CONTROL UNIT CONNECTOR D (28P)

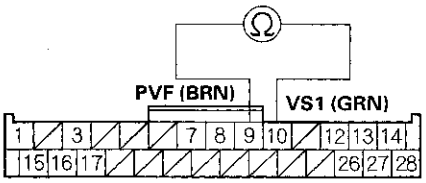

Wire side of female terminals

Is the resistance between 12 – 15 Ω ?

YES—Go to step 9.

NO—Go to step 13.

9. Measure the resistance between EPS control unit connector D (28P) terminals No. 8 and No. 9.

EPS CONTROL UNIT CONNECTOR D (28P)

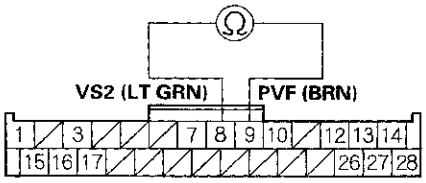

Wire side of female terminals

Is the resistance between 12– 15 Ω ?

YES—Go to step 10.

NO—Go to step 15.

10. Check for continuity between EPS control unit connector D (28P) terminal No. 9 and body ground.

EPS CONTROL UNIT CONNECTOR D (28P)

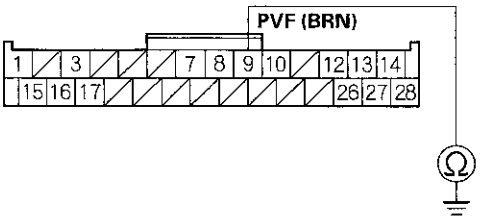

Wire side of female terminals

Is there continuity?

YES—Go to step 11.

NO—Check for loose terminals in the EPS control unit connectors, and repair if necessary. If no poor connections are found, replace the EPS control unit (see page 17-82). ■

11. Disconnect the torque sensor 3P connector from the steering gearbox.

12. Check for continuity between EPS control unit connector D (28P) terminal No. 9 and body ground.

EPS CONTROL UNIT CONNECTOR D (28P)

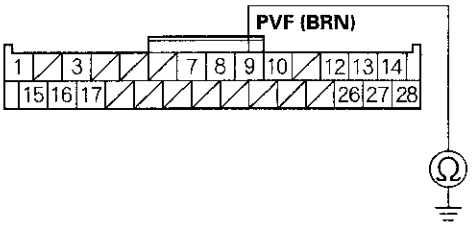

Wire side of female terminals

Is there continuity?

YES—Repair short to body ground in the wire between the torque sensor and the EPS control unit. ■

NO—Faulty torque sensor (short in the sensor internal circuit), replace the steering gearbox (see page 17-65). ■

(cont'd)

DTC Troubleshooting (cont'd)

13. Disconnect the torque sensor 3P connector from the steering gearbox.

14. On the sensor side, measure the resistance between torque sensor terminals No. 1 and No. 2.

TORQUE SENSOR 3P CONNECTOR

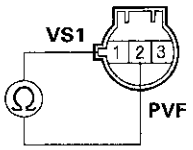

Terminal side of male terminals

Is the resistance between 12– 15 Ω ?

YES—Repair open or short between the PNK and BLU/RED wires in the torque sensor circuit between the torque sensor and the EPS control unit.■

NO—Faulty torque sensor (short or open in the internal circuit), replace the steering gearbox (see page 17-65).■

15. Disconnect the torque sensor 3P connector from the steering gearbox.

16. On the sensor side, measure the resistance between torque sensor terminals No. 2 and No. 3.

TORQUE SENSOR 3P CONNECTOR

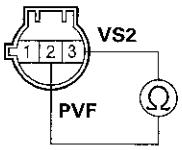

Terminal side of male terminals

Is the resistance between 12– 15 Ω ?

YES—Repair open or short between the BLU/RED and WHT/GRN wires in the torque sensor circuit between the torque sensor and the EPS control unit.■

NO—Faulty torque sensor (short or open in the internal circuit), replace the steering gearbox (see page 17-65).■

DTC 61-04: Open/Short in the EPS Motor Harness (Steering Diagnosis)

1. Turn the ignition switch to ON (II).

2. Clear the DTC with the HDS.

3. Turn the ignition switch to LOCK (0).

4. Start the engine.

5. Turn the steering wheel to the right or left, and wait 10 seconds or more.

   Does the EPS indicator come on?

   YES—Go to step 6.

   NO—Check for loose terminals or poor connections. If the connections are good, the system is OK at this time.■

6. Check for DTCs with the HDS.

   Is DTC 61-04 indicated?

   YES—Go to step 7.

   NO—Troubleshoot the indicated DTC. If there are no DTCs, the system is OK at this time.■

7. Turn the ignition switch to LOCK (0).

8. Disconnect EPS control unit connector B (2P) and connector C (2P).

9. Check for continuity between the following terminals of EPS control unit connector B (2P) and connector C (2P).

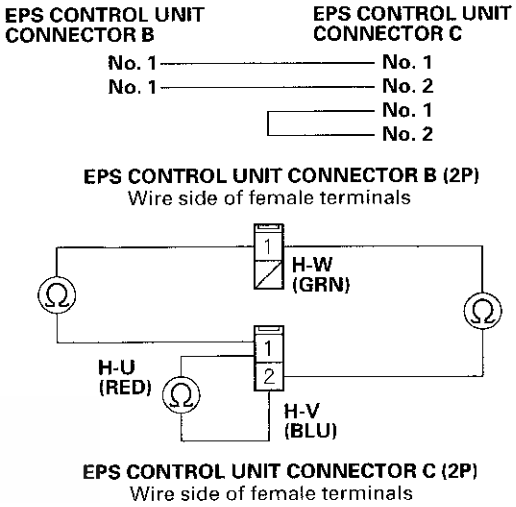

   Is there continuity?

   YES—Go to step 10.

   NO—Go to step 13.

(cont'd)

DTC Troubleshooting (cont'd)

10. Check for continuity between body ground and EPS control unit connector B (2P) terminal No. 1, connector C (2P) terminal No. 1, and connector C (2P) terminal No. 2 individually.

EPS CONTROL UNIT CONNECTOR B (2P)

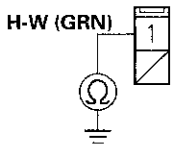

Wire side of female terminals

EPS CONTROL UNIT CONNECTOR C (2P)

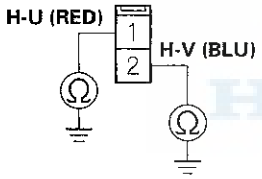

Wire side of female terminals

Is there continuity?

YES—Go to step 11.

NO—Check for loose terminals in the EPS control unit connectors, and repair if necessary. If no poor connections are found, replace the EPS control unit (see page 17-82). ■

11. Disconnect EPS motor connector B (1P) and EPS motor connector A (2P).

12. Check for continuity between body ground and EPS control unit connector B (2P) terminal No. 1, connector C (2P) terminal No. 1, and connector C (2P) terminal No. 2 individually.

EPS CONTROL UNIT CONNECTOR B (2P)

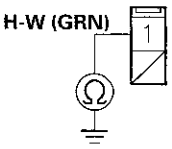

Wire side of female terminals

EPS CONTROL UNIT CONNECTOR C (2P)

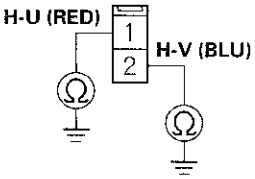

Wire side of female terminals

Is there continuity?

YES—Repair short to body ground in the wire between the EPS control unit and the EPS motor. ■

NO—Short to the body ground in the EPS motor wire, or EPS motor internal circuit, replace the EPS motor (see page 17-63). ■

13. Disconnect EPS motor connector B (1P) and EPS motor connector A (2P).

14. On the EPS motor side, check for continuity between the following terminals of EPS motor connector B (1P) and EPS motor connector A (2P).

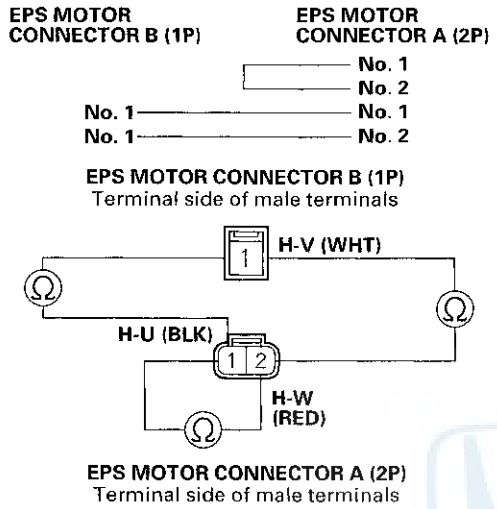

Is there continuity?

YES—Repair open in the wire between the EPS control unit and the EPS motor.■

NO—Open in the EPS motor wire , or EPS motor internal circuit, replace the EPS motor (see page 17-63).■

DTC 71-01: EPS Motor Angle Sensor (SIN/COS Signals) (Steering Diagnosis)

DTC 71-02: EPS Motor Angle Sensor (Neutral Position Learning of SIN/COS) (Initial Diagnosis)

DTC 71-03: EPS Motor Angle Sensor (SIN/COS Signals) (Steering Diagnosis)

DTC 71-05: EPS Motor Angle Sensor (SIN/COS Signals Changing Amount) (Steering Diagnosis)

DTC 71-06: EPS Motor Angle Sensor (Neutral Position of SIN/COS) (Initial Diagnosis)

1. Turn the ignition switch to ON (II).

2. Clear the DTC with the HDS.

3. Turn the ignition switch to LOCK (0).

4. Start the engine.

5. Turn the steering wheel to the right or left, and wait 10 seconds or more.

   Does the EPS indicator come on?

   YES—Go to step 6.

   NO—Check for loose terminals or poor connections. If the connections are good, the system is OK at this time.■

6. Check for DTCs with the HDS.

   Is DTC 71-01, 71-02, 71-03, 71-05, or 71-06 indicated?

   YES—Go to step 7.

   NO—Troubleshoot the indicated DTC. If there are no DTCs, the system is OK at this time.■

7. Turn the ignition switch to LOCK (0).

(cont'd)

DTC Troubleshooting (cont'd)

8. Disconnect EPS control unit connector D (28P).

9. Measure the resistance between the following terminals of EPS control unit connector D (28P).

EPS CONTROL UNIT CONNECTOR D (28P)

No. 13 (R1) —— **No. 27 (R2)**
No. 12 (S1) —— **No. 26 (S3)**
No. 14 (S2) —— **No. 28 (S4)**

EPS CONTROL UNIT CONNECTOR D (28P)

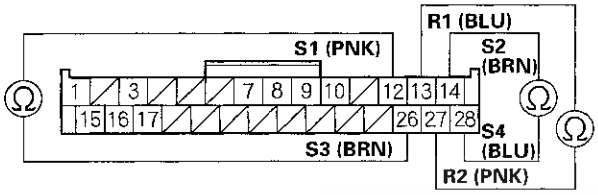

Wire side of female terminals

Is the resistance between R1 – R2 13 – 25 Ω, S1 – S3 26 – 49 Ω, and S2 – S4 26 – 49 Ω?

YES—Go to step 10.

NO—Go to step 13.

10. Check for continuity between body ground and EPS control unit connector D (28P) terminal No. 12, terminal No. 13, terminal No. 14, terminal No. 26, terminal No. 27, and terminal No. 28 individually.

EPS CONTROL UNIT CONNECTOR D (28P)

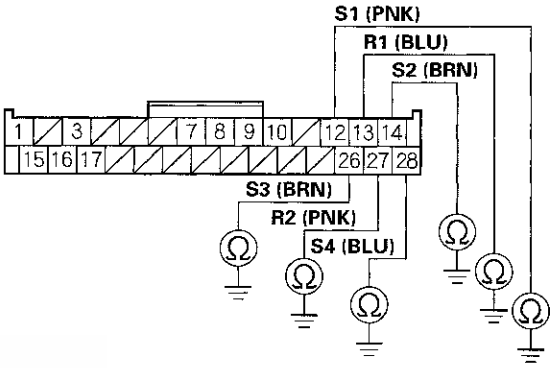

Wire side of female terminals

Is there continuity?

YES—Go to step 11.

NO—Check for loose terminals in the EPS control unit connectors, and repair if necessary. If no poor connections are found, replace the EPS control unit (see page 17-82). ■

11. Disconnect the EPS motor angle sensor 6P connector.

12. On the sensor side, check for continuity between body ground and EPS motor angle sensor 6P connector terminal No. 1, terminal No. 2, terminal No. 3, terminal No. 4, terminal No. 5, and terminal No. 6 individually.

EPS MOTOR ANGLE SENSOR 6P CONNECTOR

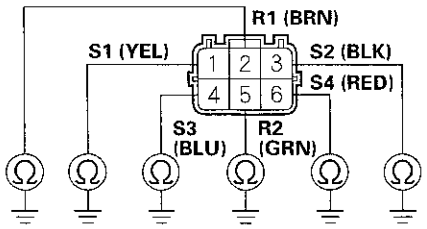

Terminal side of male terminals

Is there continuity?

YES—Faulty EPS motor angle sensor (Internal failure), or short to body ground in the wire (sensor side), replace the EPS motor (see page 17-63).■

NO—Repair short to body ground in the wire between the EPS motor angle sensor 6P connector and the EPS control unit.■

13. Disconnect the EPS motor angle sensor 6P connector.

14. On the sensor side, measure the resistance between the following terminals of the EPS motor angle sensor 6P connector.

EPS MOTOR ANGLE SENSOR 6P CONNECTOR

No. 2 (R1)	No. 5 (R2)
No. 1 (S1)	No. 4 (S3)
No. 3 (S2)	No. 6 (S4)

EPS MOTOR ANGLE SENSOR 6P CONNECTOR

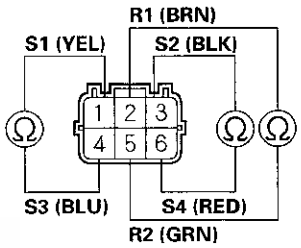

Terminal side of male terminals

Is the resistance between R1—R2 13—25 Ω, S1—S3 26—49 Ω, and S2—S4 26—49 Ω?

YES—Open in the wire between the EPS motor angle sensor 6P connector and the EPS control unit.■

NO—Faulty EPS motor angle sensor (internal failure), or open in the wire (sensor side), replace the EPS motor (see page 17-63).■

DTC Troubleshooting (cont'd)

DTC 71-04: Motor Angle Sensor (Check Signals) (Regular diagnosis)

1. Turn the ignition switch to ON (II).
2. Clear the DTC with the HDS.
3. Turn the ignition switch to LOCK (0).
4. Start the engine.
5. Turn the steering wheel to the right or left, and wait 10 seconds or more.

   Does the EPS indicator come on?

   YES—Go to step 6.

   NO—Check for loose terminals or poor connections. If the connections are good, the system is OK at this time.■

6. Check for DTCs with the HDS.

   Is DTC 71-04 indicated?

   YES—Go to step 7.

   NO—Troubleshoot the indicated DTC. If there are no DTCs, the system is OK at this time.■

7. Turn the ignition switch to LOCK (0).
8. Disconnect EPS control unit connector D (28P).
9. Measure the resistance between EPS control unit connector D (28P) terminals No. 13 and No. 27.

EPS CONTROL UNIT CONNECTOR D (28P)

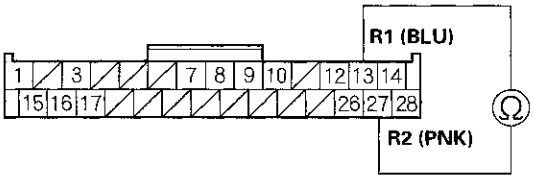

Wire side of female terminals

Is the resistance between 13—25 Ω ?

YES—Go to step 10.

NO—Go to step 13.

10. Check for continuity between body ground and EPS control unit connector D (28P) terminal No. 13 and the terminal No. 27 individually.

EPS CONTROL UNIT CONNECTOR D (28P)

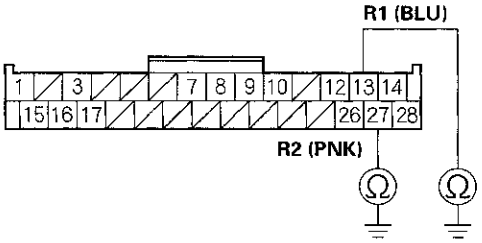

Wire side of female terminals

Is there continuity?

YES—Go to step 11.

NO—Check for loose terminals in the EPS control unit connectors, and repair if necessary. If no poor connections are found, replace the EPS control unit (see page 17-82).■

11. Disconnect the EPS motor angle sensor 6P connector.

12. On the sensor side, check for continuity between body ground and EPS motor angle sensor 6P connector terminal No. 2 and the terminal No. 5 individually.

EPS MOTOR ANGLE SENSOR 6P CONNECTOR

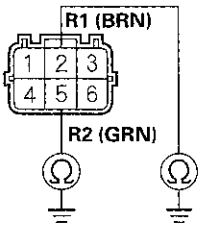

Terminal side of male terminals

Is there continuity?

YES—Faulty EPS motor angle sensor (internal failure), or short to body ground in the wire (sensor side), replace the EPS motor (see page 17-63).■

NO—Repair short to body ground in the wire between the EPS motor angle sensor 6P connector and the EPS control unit.■

13. Disconnect the EPS motor angle sensor 6P connector.

14. On the sensor side, measure the resistance between the EPS motor angle sensor 6P connector terminals No. 2 and No. 5.

EPS MOTOR ANGLE SENSOR 6P CONNECTOR

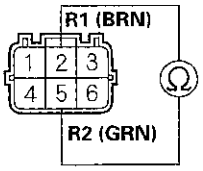

Terminal side of male terminals

Is the resistance between 13—25 Ω ?

YES—Open in the wire between the EPS motor angle sensor 6P connector and EPS control unit.■

NO—Faulty EPS motor angle sensor (internal failure), or open in the wire (sensor side), replace the EPS motor (see page 17-63).■

Symptom Troubleshooting

EPS indicator does not come on

1. Turn the ignition switch to ON (II), and watch the EPS indicator.

   Does the EPS indicator come on?

   YES—The system is OK at this time.■

   NO—Troubleshoot the gauge control module (tach) (see page 22-223).■

EPS indicator does not go off, and no DTCs are stored

NOTE: Check for gauge DTCs with the HDS (see page 22-6). If gauge DTCs are stored, troubleshoot those DTCs first.

1. Turn the ignition switch to LOCK (0).

2. Check the No. 4 (7.5 A) fuse in the under-dash fuse/relay box.

   Is the fuse OK?

   YES—Reinstall the checked fuse, then go to step 7.

   NO—Go to step 3.

3. Disconnect EPS control unit connector D (28P).

4. Check for continuity between EPS control unit connector D (28P) terminal No. 16 and body ground.

EPS CONTROL UNIT CONNECTOR D (28P)

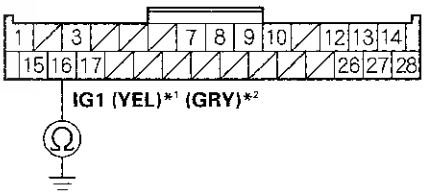

***1 : '06 model**
***2 : '07-09 models**

Wire side of female terminals

Is there continuity?

YES—Repair short to body ground in the wire between the EPS control unit and the No. 4 (7.5 A) fuse in the under-dash fuse/relay box.■

NO—Install a new No. 4 (7.5 A) fuse in the under-dash fuse/relay box, then go to step 5.

5. Reconnect EPS control unit connector D (28P).

6. Turn the ignition switch to ON (II), and watch the EPS indicator.

   Dose the EPS indicator come on, then go off?

   YES—Troubleshooting is complete. If any other DTCs are indicated, go to the indicated DTC's troubleshooting. ■

   NO—Replace the EPS control unit (see page 17-82). ■

7. Disconnect EPS control unit connector D (28P).

8. Turn the ignition switch to ON (II).

9. Measure the voltage between EPS control unit connector D (28P) terminal No. 16 and body ground.

EPS CONTROL UNIT CONNECTOR D (28P)

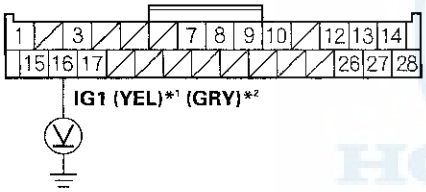

***1 : '06 model**
***2 : '07-09 models**

Wire side of female terminals

Is there battery voltage?

YES—Go to step 10.

NO—Repair open in the wire between the EPS control unit and under-dash fuse/relay box. ■

10. Turn the ignition switch to LOCK (0).

11. Disconnect EPS control unit connector A (2P).

12. Check for continuity between EPS control unit connector A (2P) terminal No. 1 and body ground.

EPS CONTROL UNIT CONNECTOR A (2P)

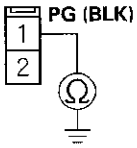

Wire side of female terminals

Is there continuity?

YES—Go to step 13.

NO—Repair open in the wire between the EPS control unit and body ground (G402). ■

(cont'd)

Symptom Troubleshooting (cont'd)

13. Disconnect the gauge control module (tach) 36P connector.

14. Check for continuity between EPS control unit connector D (28P) terminal No. 1 and gauge control module (tach) 36P connector terminal No. 1.

EPS CONTROL UNIT CONNECTOR D (28P)
Wire side of female terminals

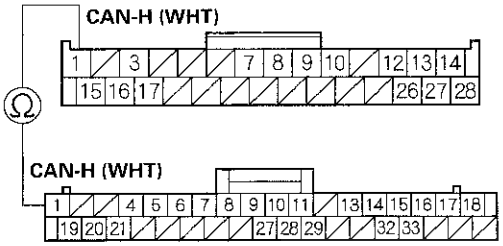

GAUGE CONTROL MODULE (TACH) 36P CONNECTOR
Wire side of female terminals

Is there continuity?

YES—Go to step 15.

NO—Repair open in the wire between the EPS control unit and the gauge control module (tach). ■

15. Check for continuity between EPS control unit connector D (28P) terminal No. 15 and gauge control module (tach) 36P connector terminal No. 19.

EPS CONTROL UNIT CONNECTOR D (28P)
Wire side of female terminals

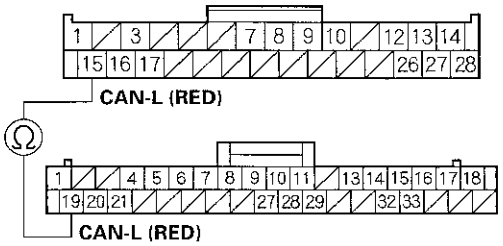

GAUGE CONTROL MODULE (TACH) 36P CONNECTOR
Wire side of female terminals

Is there continuity?

YES—Check for loose terminals in the EPS control unit connectors, and repair if necessary. If no poor connections are found, replace the EPS control unit (see page 17-82). ■

NO—Repair open in the wire between the EPS control unit and the gauge control module (tach). ■

EPS Motor Removal and Installation

NOTE:
- Do not allow dust, dirt, or other foreign materials to enter the steering gearbox.
- Make sure not to get any silicone grease on the terminal part of the connectors and switches, especially if you have silicone grease on your hands or gloves.

Removal

1. Remove the steering gearbox (see page 17-65).

2. Disconnect the torque sensor 3P connector (A) from the steering gearbox, then remove the wire harness clamp bolts and the ground terminal (B).

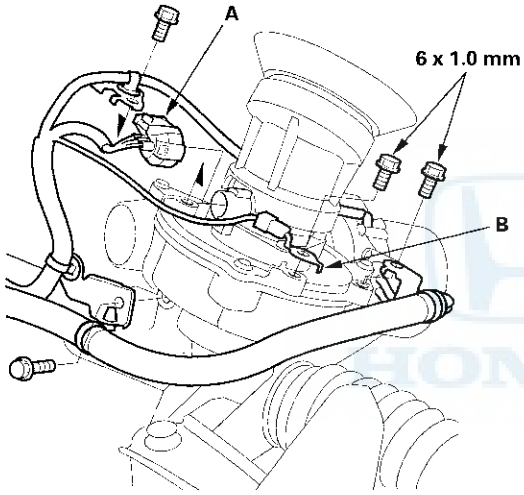

3. Remove the EPS motor (A) from the steering gearbox, then remove the O-ring (B) and discard it.

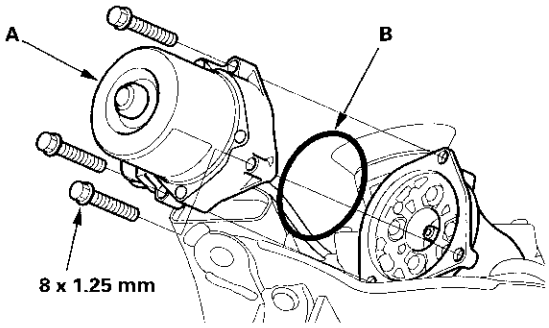

(cont'd)

EPS Motor Removal and Installation (cont'd)

Installation

1. Clean the mating surface of the EPS motor (A) and the steering gearbox.

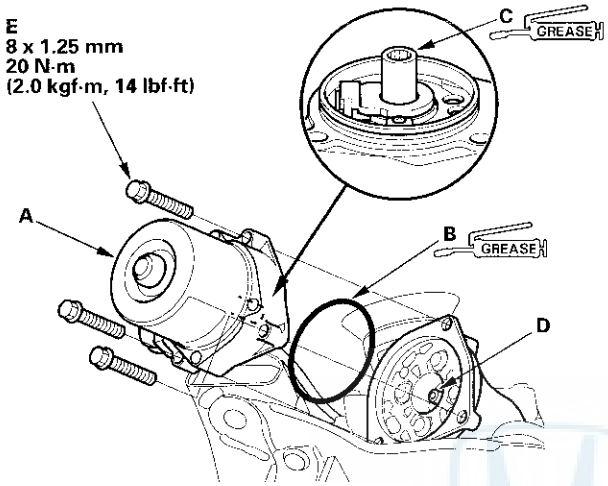

2. Apply a thin coat of silicone grease to the new O-ring (B), and carefully fit it on the EPS motor.
3. Apply steering grease into the EPS motor shaft (C).
4. Set the EPS motor on the steering gearbox by engaging the EPS motor shaft and the worm shaft (D).
5. Turn the EPS motor two or three times to the right and left about 45 degrees. Make sure the EPS motor is evenly seated on the steering gearbox, and that the O-ring is not pinched between the mating surfaces.
6. Loosely install the EPS motor mounting bolts (E), then turn the steering shaft two or three times to the right and left about 45 degrees.
7. Tighten the EPS motor mounting bolts to the specified torque.
8. Connect the torque sensor 3P connector (A) to the wire steering gearbox, then install the wire harness clamp bolts and the ground terminal (B).

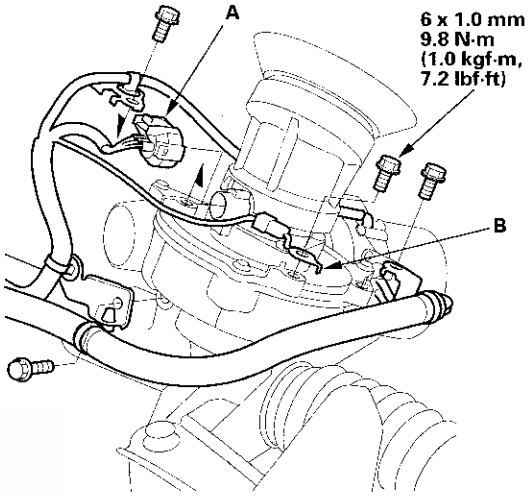

9. Finish the installation, and note these items;
   - Make sure the torque sensor 3P connector is properly connected.
   - Make sure the EPS motor and the EPS wires are not caught or pinched by any parts.
10. Install the steering gearbox (see page 17-71).

Steering Gearbox Removal and Installation

Special Tools Required
- Universal eyelet 07AAK-SNAA120
- Ball joint remover, 28 mm 07MAC-SL0A202
- Front subframe adapter VSB02C000016 *
- 2006 Civic engine hanger VSB02C000025 *
- Engine support hanger, A and Reds AAR-T1256 *

* : These special tools are available through the Honda Tool and Equipment Program, 888-424-6857

Note these items during removal:
- Use solvent and a brush to wash any oil and dirt off the end of the steering gearbox. Avoid any electrical parts. Blow dry with compressed air. Wear eye protection.
- Make sure to remove the steering wheel before disconnecting the steering joint to avoid damaging the cable reel may occur.

Removal

1. Do the battery terminal disconnection procedure (see page 22-62).
2. Remove the cowl cover and under-cowl panel (see page 20-140).
3. Raise the front of the vehicle, and support it with safety stands in the proper locations (see page 1-10).
4. Remove the front wheels.
5. Remove the steering wheel (see page 17-6).
6. Remove the driver's airbag (see page 24-184), and the driver's dashboard undercover (see page 20-90).
7. Remove the steering joint cover (A).

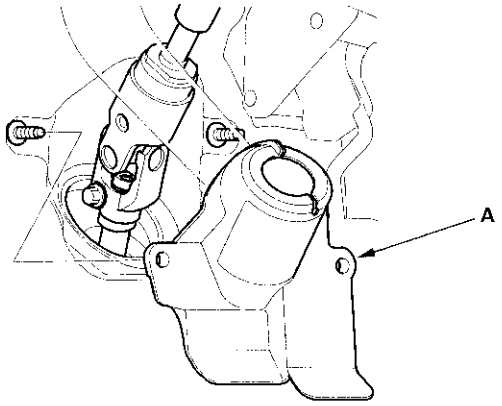

8. Release the lock lever, and adjust the steering column to the full tilt up position, and to the full telescopic in position.
9. Tighten the lock lever.
10. Hold the lower slide shaft (A) on the column with a piece of wire (B) between the joint yoke (C) of the lower slide shaft and the joint yoke (D) of the upper shaft to prevent the slider shaft from pulling out.

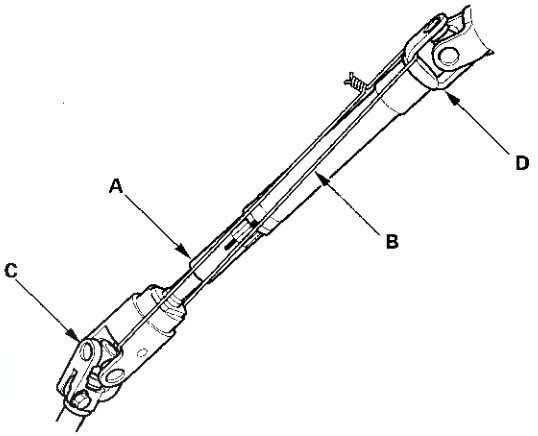

11. Release the lock lever, and adjust the steering column to the full telescopic out position, then tighten the lock lever.
12. Remove the steering joint bolt (A), and disconnect the steering joint by moving the steering joint (B) toward the column.

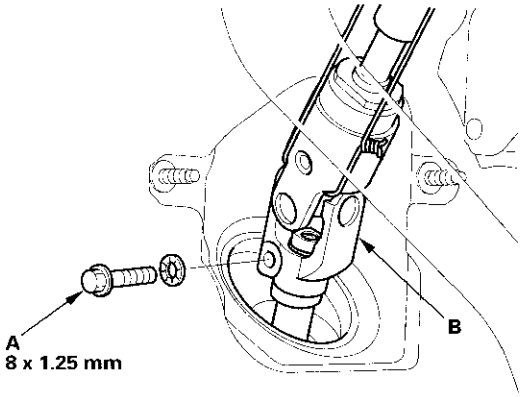

(cont'd)

Steering Gearbox Removal and Installation (cont'd)

13. Remove the center guide (A) (if equipped), and discard it. The center guide is for factory assembly use only.

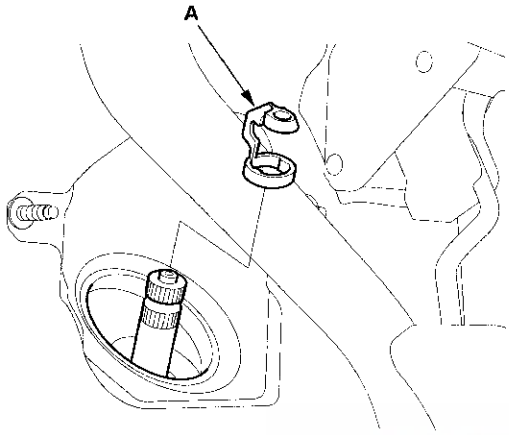

14. Install the universal eyelet (07AAK-SNAA120) to the threaded hole (A) on the cylinder head with a 10 x 1.25 mm bolt (B).

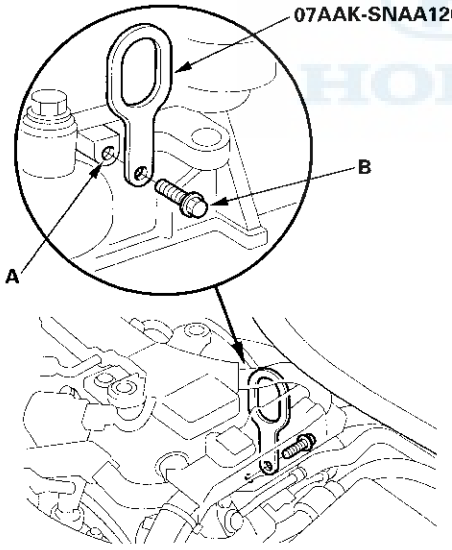

15. Install the front leg assembly (A), hook (B), and wing nut (C) from an A and Reds engine support hanger (AAR-T1256) onto the 2006 civic engine hanger (VSB02C000025). Carefully position the engine hanger on the vehicle, and attach the hook to the universal eyelet (D). Tighten the wing nut by hand to lift and support the engine/transmission.

NOTE: Be careful when working around the windshield.

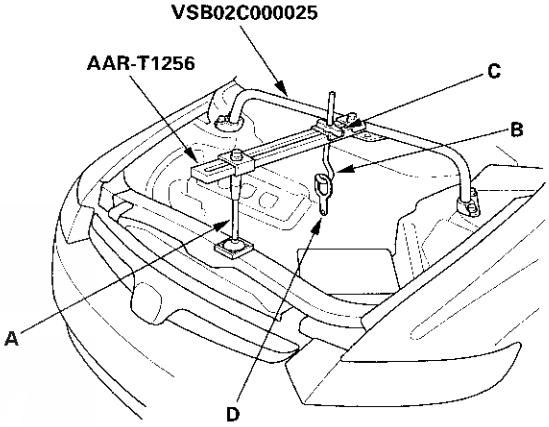

16. Remove the cotter pin (A) from the 12 mm nut (B), and loosen the nut.

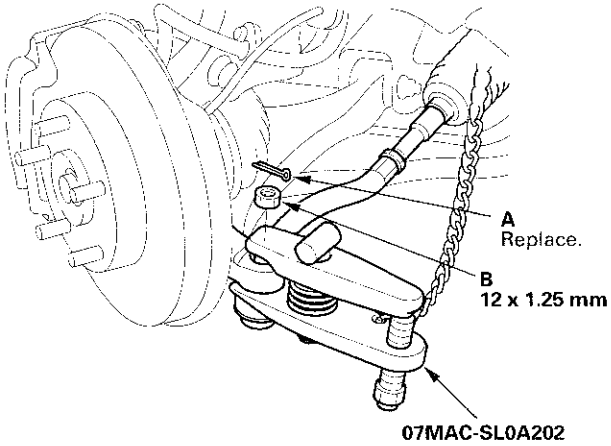

17. Separate the tie-rod ball joint and the knuckle using the ball joint remover (see page 18-12).

18. Remove the front splash shield (A) (see page 20-148), and the front undercover (B) (see page 20-150).

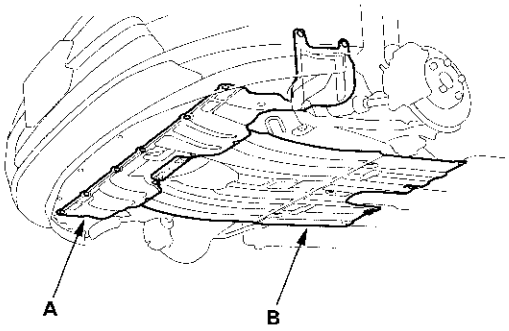

19. Disconnect the EPS motor connector A (2P), the EPS motor connector B (1P), torque sensor 4P connector (C), the EPS motor angle sensor 6P connector (D) from passenger's side of the steering gearbox. Wrap the connectors with vinyl tape to avoid contamination from grease or water.

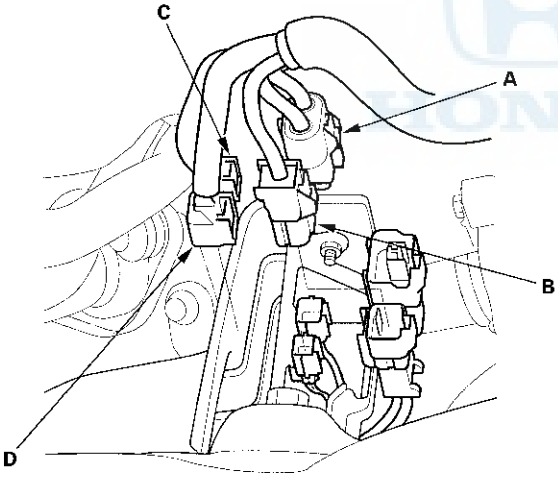

20. Remove the lower ball joint mounting bolt (A) and the self-locking nuts (B) from the lower arm.

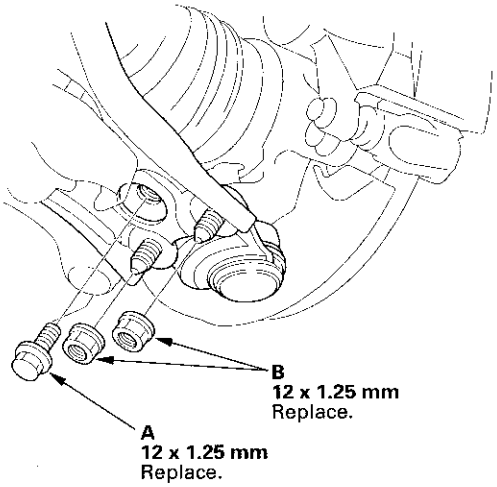

21. Disconnect the lower arm from the lower ball housing.

22. Remove the exhaust hanger (A) from the under-floor three way catalytic converter (TWC) (B).

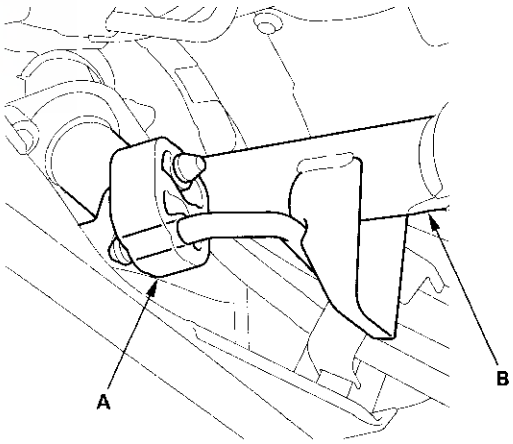

(cont'd)

Steering Gearbox Removal and Installation (cont'd)

23. Note the reference marks (A) on both sides of the front subframe that line up with the body (B).

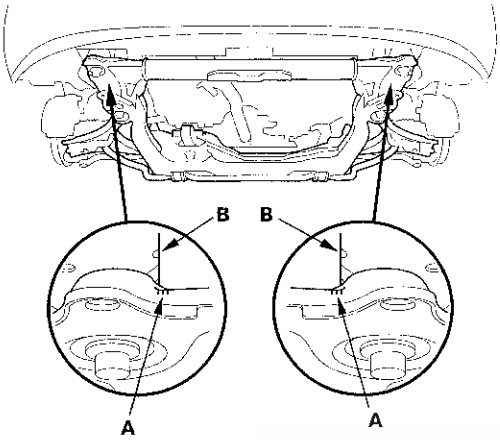

24. Attach the front subframe adaptor (VSB02C000016) (A) to the front subframe (B) and the transmission jack (model number LSL-W9371) or the powertrain lift (model number OTC-1585), then tighten the front subframe adaptor screw.

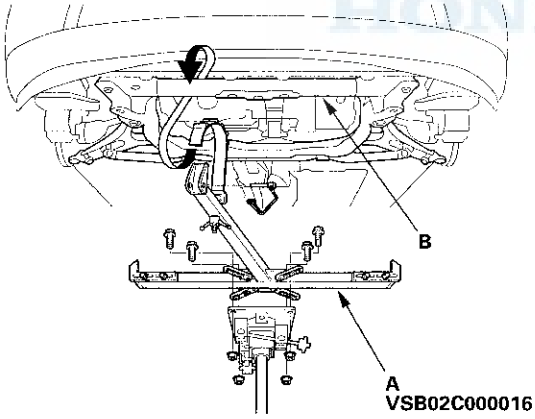

25. Make sure the front subframe is securely supported by the jack with the front subframe adaptor.

26. Remove the front subframe middle mount bolt (A) from the left side.

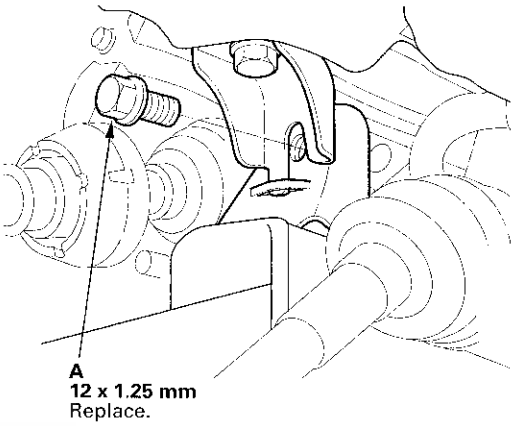

27. Remove the front subframe middle mount bolt (A) from the right side.

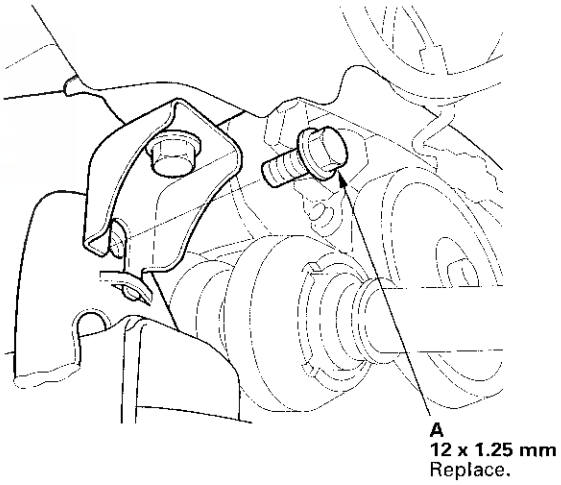

28. Remove the lower torque rod mounting bolts (A) from the lower torque rod bracket.

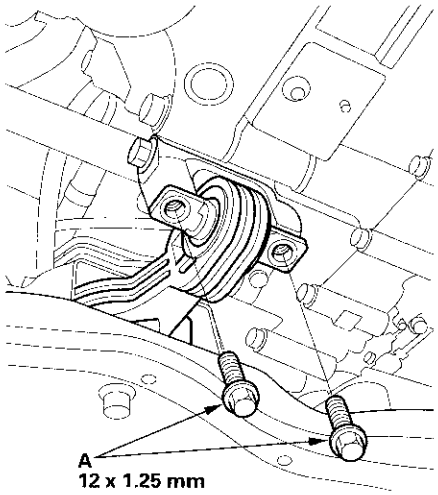

29. Remove the front subframe front mounting bolts (A) from the right and left sides of the vehicle.

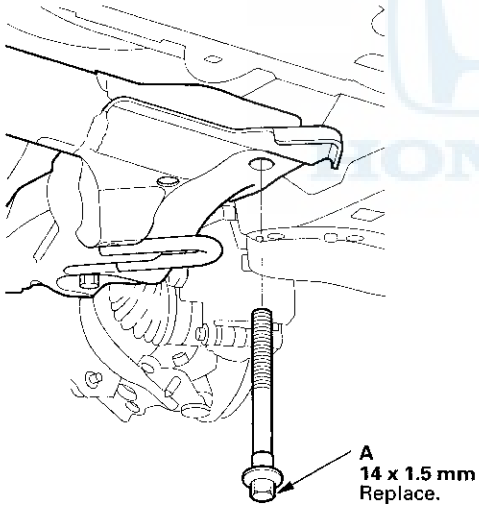

30. Remove the front subframe rear mounting bolts (A) from the right and left sides of the vehicle.

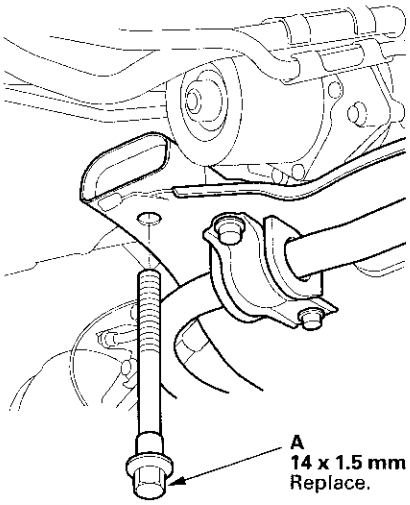

31. Lower the front subframe and steering gearbox as an assembly by lowering the jack slowly.

32. Remove the heat shield (A) from the front subframe, then remove the harness clips (B).

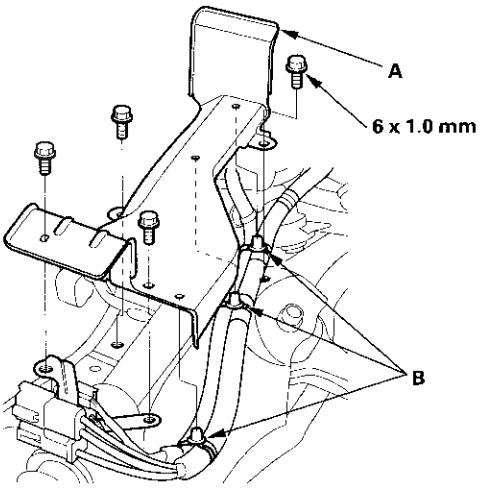

(cont'd)

Steering Gearbox Removal and Installation (cont'd)

33. Remove the EPS motor connector A (2P), the EPS motor connector B (1P), torque sensor 4P connector (C), the EPS motor angle sensor 6P connector (D) from the passenger's side of the gearbox mounting bracket (E).

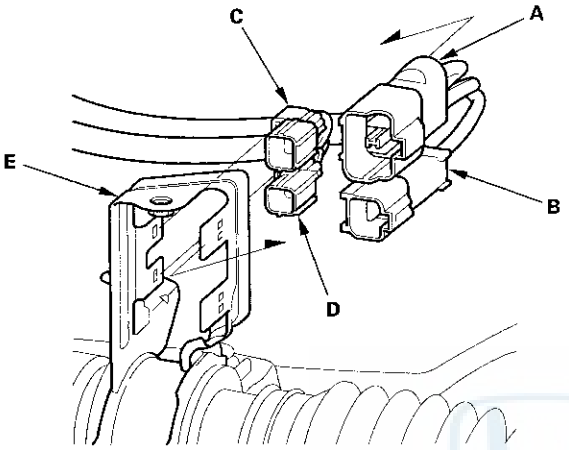

34. Remove the pinion shaft grommet (A) from the top of the torque sensor.

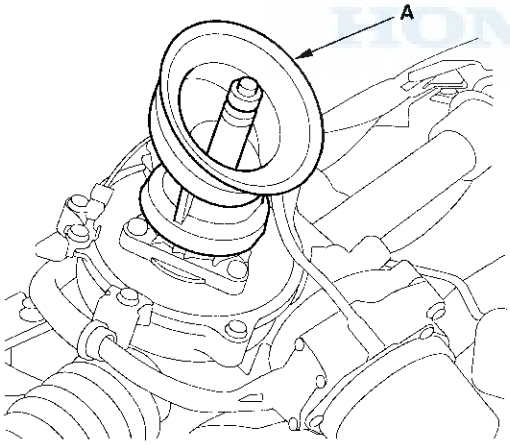

35. Remove the two 10 mm bolts from the right side of the steering gearbox, then remove the gearbox mounting bracket (A) and the mounting cushion (B).

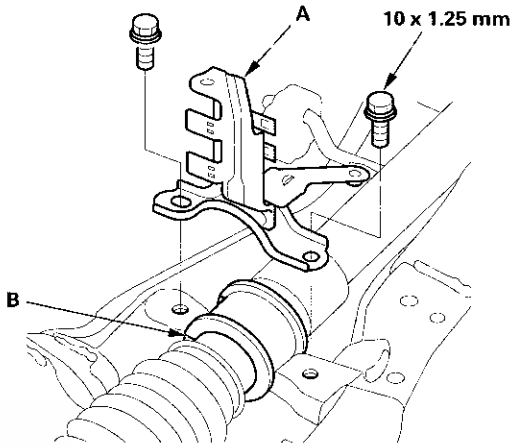

36. Remove the four 10 mm flange bolts from the left side of the steering gearbox, then remove the stiffener plates (A).

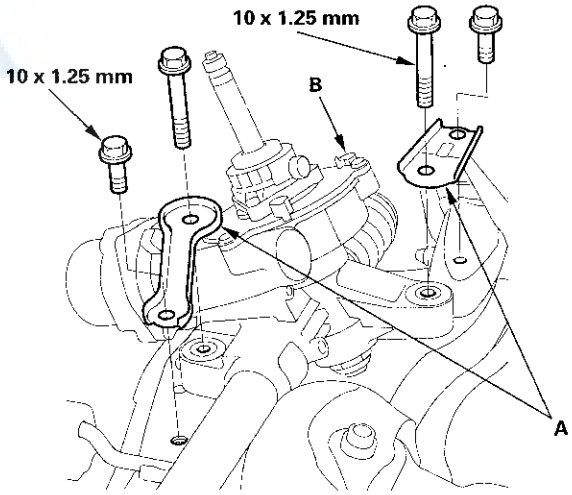

37. Remove the steering gearbox (B) from the front subframe.

Installation

1. Place the steering gearbox in position on the front subframe.

2. Loosely install the stiffener plates (A), and the gearbox mounting bolts on the left side of the steering gearbox.

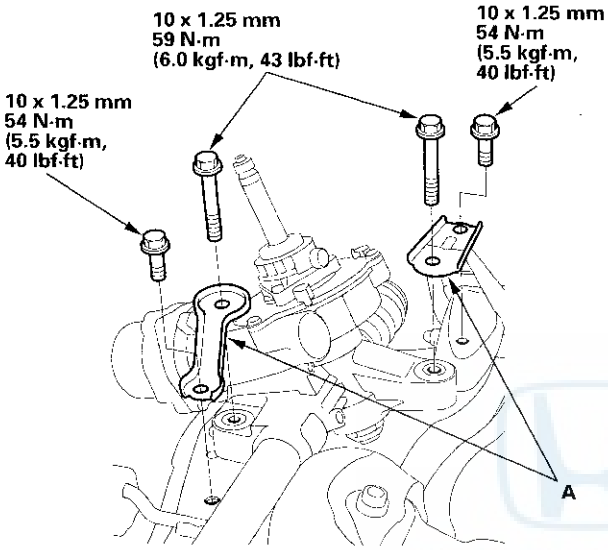

3. Position the cutout (A) on the mounting cushion (B) as shown, and install it on the right side of the steering gearbox securely.

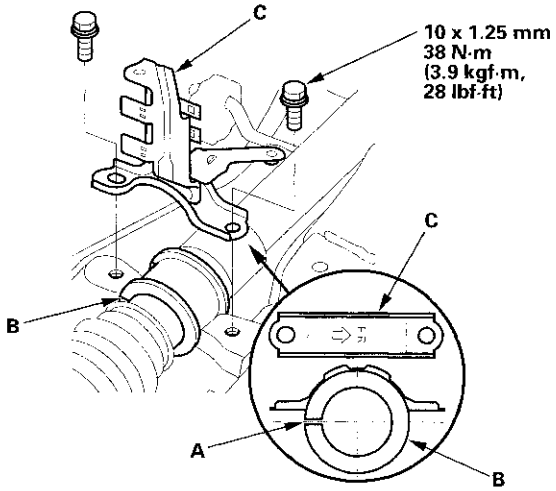

4. Install the gearbox mounting bracket (C) over the mounting cushion, and loosely install the two 10 mm bolts.

5. Tighten the 10 mm bolts on both sides of the steering gearbox to the specified torque alternately in two or more steps.

6. Install the pinion shaft grommet (A). Align the slot in the pinion shaft grommet with the lug portion (B) on the torque sensor. The grommet must not have a gap at the mating surface of the grommet and the torque sensor.

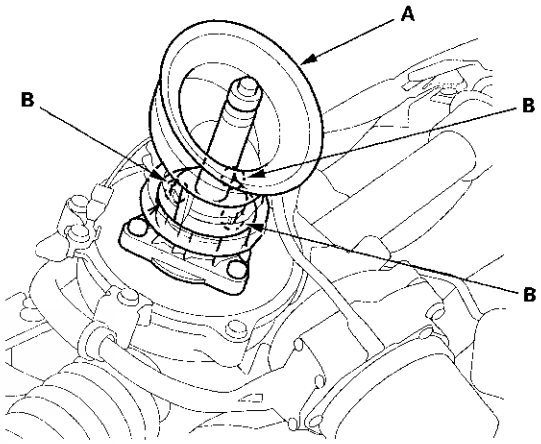

7. Install the EPS motor connector A (2P), the EPS motor connector B (1P), torque sensor 4P connector (C), the EPS motor angle sensor 6P connector (D) on the right side of the gearbox mounting bracket.

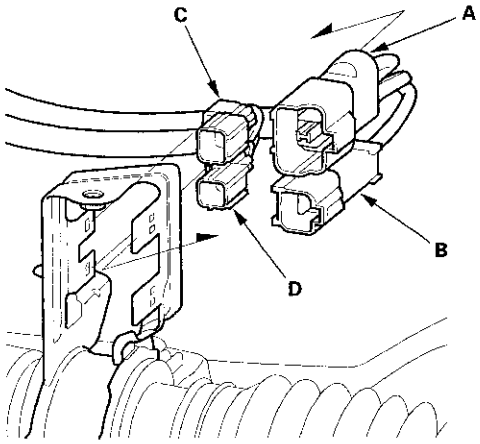

(cont'd)

Steering Gearbox Removal and Installation (cont'd)

8. Install the harness clips (A) to the heat shield (B), then install the heat shield to the front subframe.

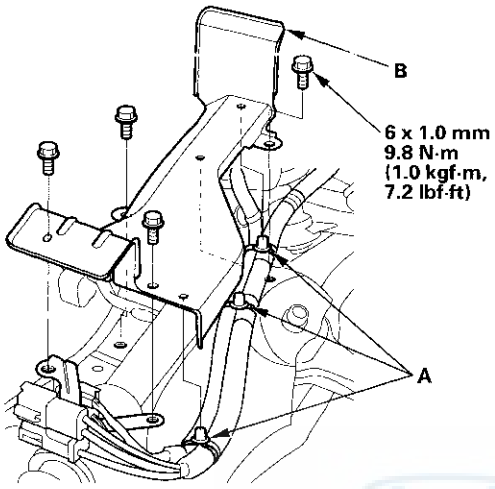

9. Carefully raise the front subframe with the front subframe adapter and the transmission jack or the powertrain lift until the front subframe is in position, then loosely install the new front subframe mounting bolts.

   NOTE: Be sure that the pinion shaft grommet is in place securely. Check whether the pinion shaft grommet is not turning up. Incorrect installation can cause leakage of water, mud, and noise.

10. Align the front subframe reference marks (A) to the body (B), as noted during removal.

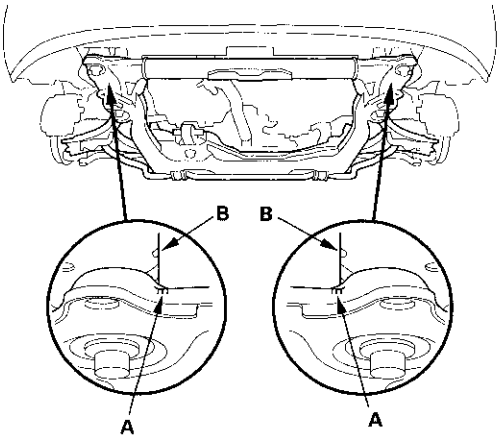

11. Tighten the new front subframe rear mounting bolts (A) to the specified torque.

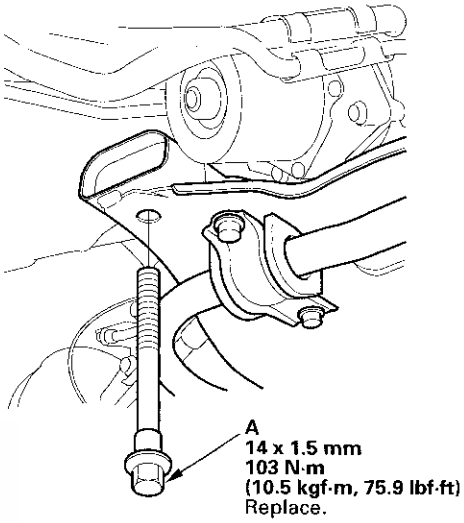

12. Tighten the new front subframe front mounting bolts (A) to the specified torque.

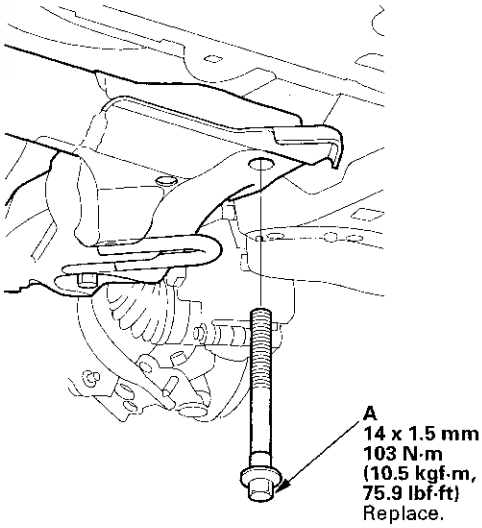

13. Install the lower torque rod mounting bolts (A), and tighten them to the specified torque.

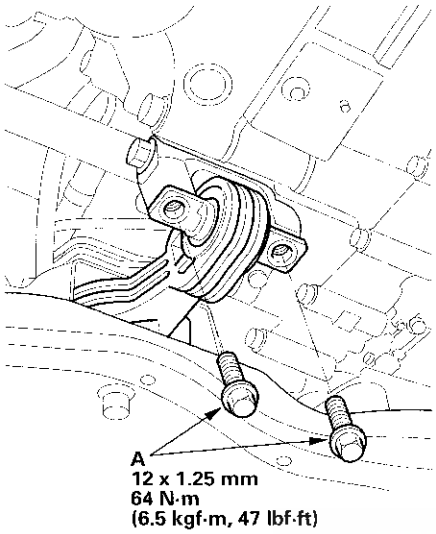

14. Install the new front subframe middle mount bolt (A) on the left side, and tighten it to the specified torque.

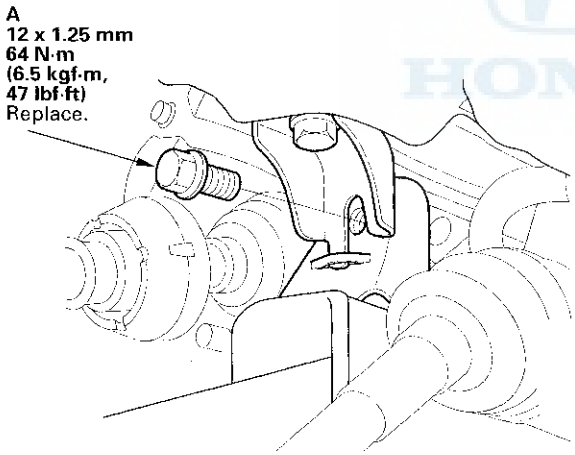

15. Install the new front subframe middle mount bolt (A) on the right side, and tighten it to the specified torque.

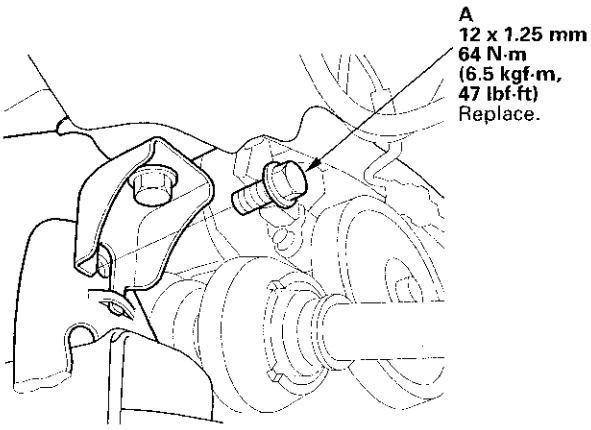

16. Lower the transmission jack supporting the front subframe.

17. Install the exhaust hanger (A) to the under-floor three way catalytic converter (TWC) (B).

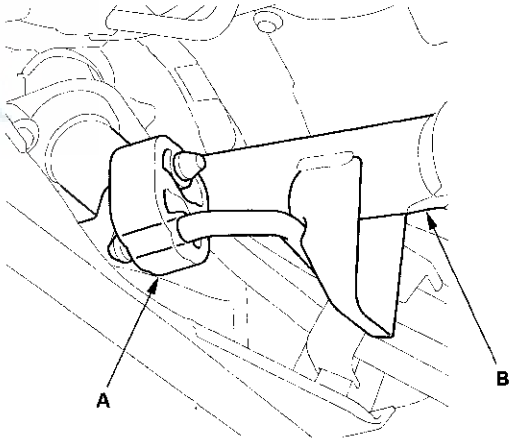

(cont'd)

Steering Gearbox Removal and Installation (cont'd)

18. Connect the lower arm (A) to the lower ball joint (B).

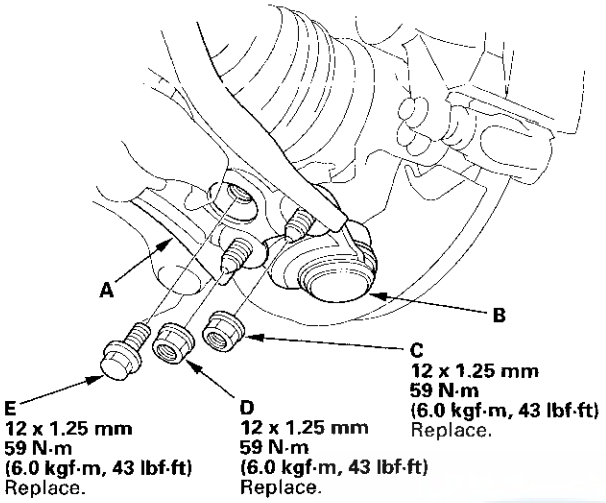

19. Install a new flange bolt and the new self-locking nuts. After lightly tightening all three fasteners, tighten them to the specified torque in the following order; the self-locking nut on the front (C), the self-locking nut on the rear (D), then the flange bolt (E).

20. Remove the vinyl tape, then connect the EPS motor connector A (2P), the EPS motor connector B (1P), torque sensor 4P connector (C), the EPS motor angle sensor 6P connector (D) to the steering gearbox. Make sure to push these connectors until you hear a click so that the connectors are secured.

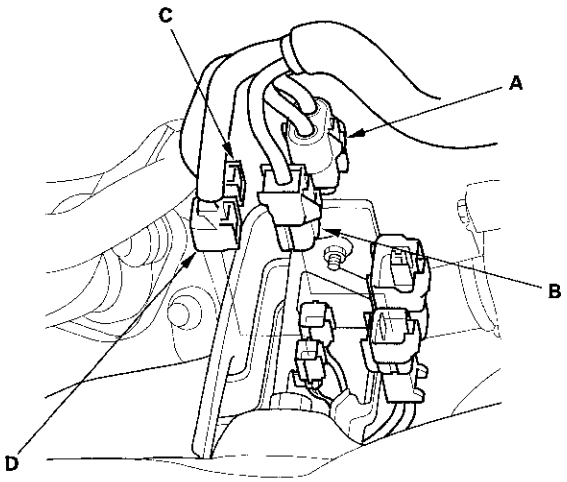

21. Install the front splash shield (A) (see page 20-148), and the front undercover (B) (see page 20-150).

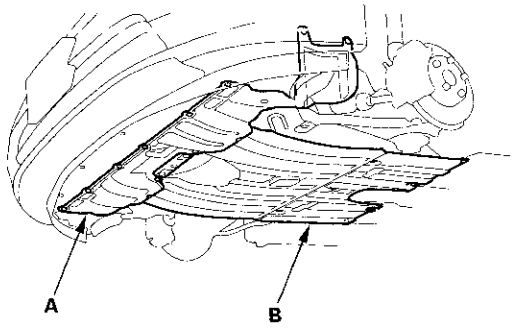

22. Wipe off any grease contamination from the ball joint tapered section and the threads. Reconnect the tie-rod ends (A) to the steering knuckles. Install the 12 mm nut (B), and tighten it.

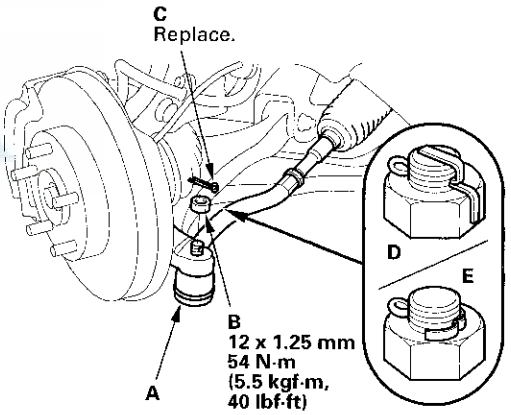

23. Install the new cotter pin (C), and bend it as shown (D) or (E).

24. Install the front wheel, then set the wheels in the straight ahead position.

    NOTE: Before installing the wheel, clean the mating surfaces of the brake disc and the inside of the wheel.

25. Lower the vehicle. Remove the engine hanger and universal eyelet.

26. Remove the engine hanger and universal eyelet.

27. Center the steering rack within its stroke in the steering joint connection.

28. With the rack in the straight ahead driving position, cut the wire (A) and slip the lower end of the steering joint onto the pinion shaft (B) in the range shown.

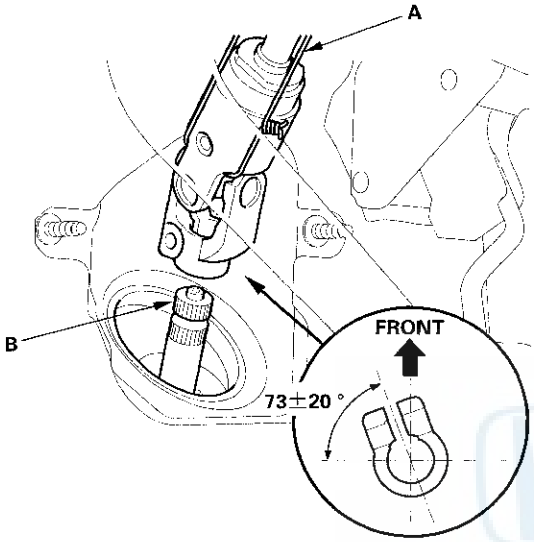

29. Align the bolt hole (A) on the steering joint with the groove (B) around the pinion shaft, and loosely install the joint bolt (C). Be sure that the joint bolt is securely in the groove in the pinion shaft. Pull on the steering joint to make sure that the steering joint is fully seated. Tighten the steering joint bolt to the specified torque.

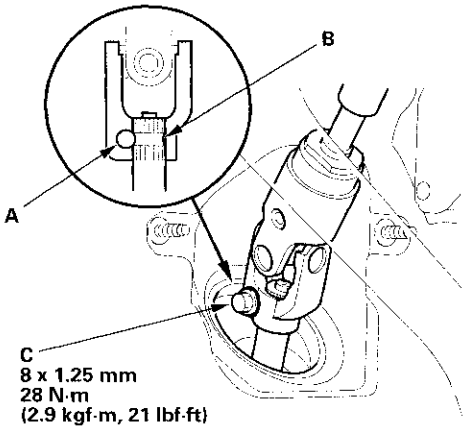

30. Install the steering joint cover (A).

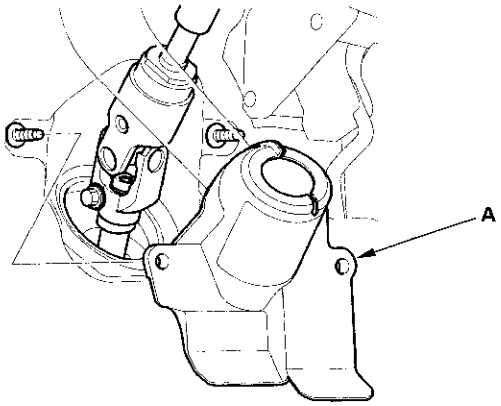

31. Install the driver's dashboard undercover (see page 20-90).

32. Install the under-cowl panel and cowl cover (see page 20-140).

33. Install the steering wheel (see page 17-9), and the driver's airbag (see page 24-184).

(cont'd)

Steering Gearbox Removal and Installation (cont'd)

34. With the tires raised off the ground (vehicle on a lift), check for the following symptoms by turning the steering wheel fully to the right and left several times.

Symptom	Probable cause
Rubbing sound coming from the lower steering column area.	Steering column joint is contacting the cover.
Grating sound from the lower steering column area, or a rough feeling during steering.	Poor engagement of the pinion shaft splines.
Noise from around the steering wheel during steering.	Poor engagement of the SRS cable reel with the steering wheel, or a damaged cable reel.

35. Do the battery reconnection procedure (see page 22-62), and do these tasks:

    NOTE: If the IMA battery level gauge (BAT) displays no segments, start the engine, and hold it between 3,500 rpm and 4,000 rpm without load (in P or N) until the BAT displays at least three segments.

    - Turn the ignition switch to ON (II) and check that the SRS indicator should comes on for about 6 seconds and then goes off.
    - Make sure the horn and turn signal switches work properly.
    - Make sure the steering wheel switches work properly.

36. After installation, do the following checks:

    - Check the steering wheel spoke angle. If steering spoke angles to the right and left are not equal (steering wheel and rack are not centered), correct the engagement of the joint/pinion shaft splines.
    - Do the memorizing for the torque sensor neutral position (see page 17-22).
    - Set the steering column to the center tilt position, and to the center telescopic position, then do the front toe inspection (see page 18-6).
    - Start the engine, and let it idle. Turn the steering wheel from lock-to-lock several times. Check that the EPS indicator does not come on.

Rack End Removal and Installation

Exploded view

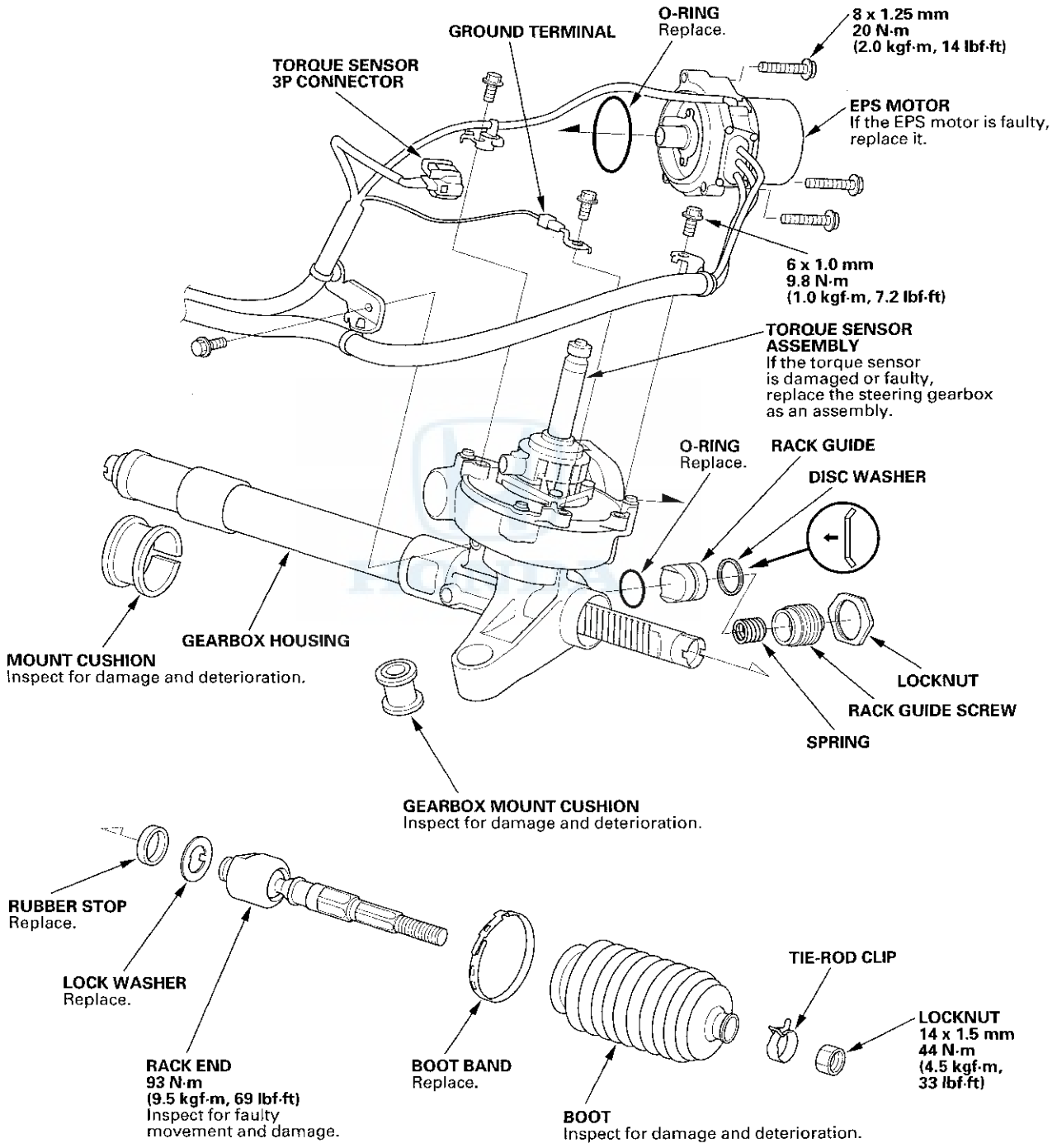

(cont'd)

Rack End Removal and Installation (cont'd)

Removal

NOTE: Do not allow dust, dirt, or other foreign materials to enter the steering gearbox.

1. Remove the boot bands (A), and discard them. Remove the tie-rod clips (B), and pull the boots away from the ends of the gearbox.

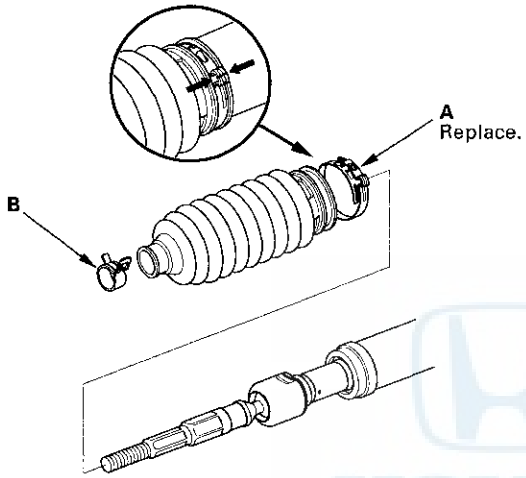

2. Unbend the lock washer (A).

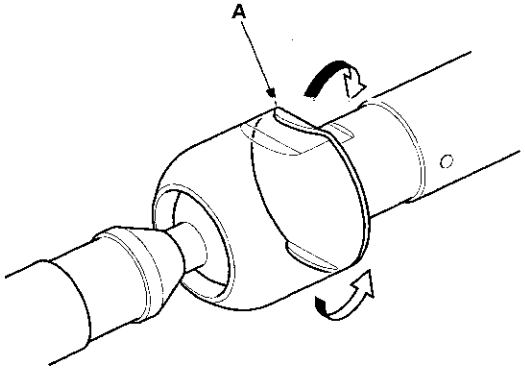

3. Hold the surface sections (A) of the steering rack (B) with one wrench, and unscrew both rack ends (C) with another wrench. Be careful not to damage the rack shaft surface with the wrench.

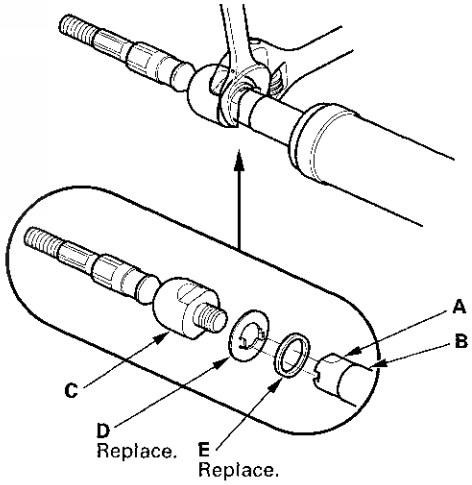

4. Remove the lock washer (D) and rubber stop (E).

Installation

1. Install a new rubber stop (A) and a new lock washer (B). Align the lock washer tabs (C) with the slots (D) on the rack end (E) while holding the lock washer in place. Repeat this step for the other side of the rack shaft.

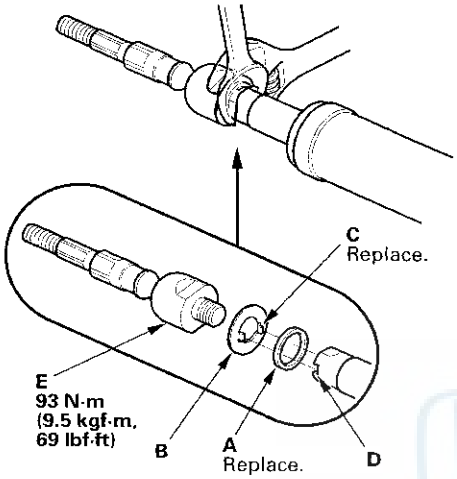

2. Hold the flat surface sections of the steering rack with one wrench, and tighten both rack ends with another wrench. Be careful not to damage the rack surface with the wrench.

3. Bend the lock washer (A) back against the flat spots (B) on the rack end ball joint housing.

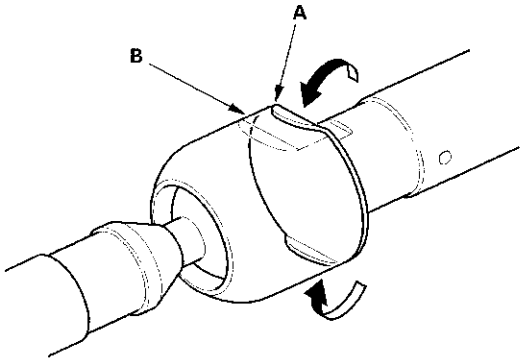

4. Apply multipurpose grease to the circumference of the rack end joint housing (A) and lock washer.

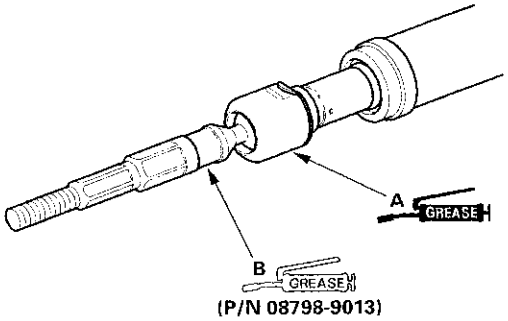

5. Apply a light coat of silicone grease (P/N 08798-9013) to the boot fitting grooves (B) on the rack ends.

   NOTE: Make sure not to get any silicone grease on the terminal part of the connectors and switches, especially if you have silicone grease on your hands or gloves.

(cont'd)

Rack End Removal and Installation (cont'd)

6. Center the steering rack within its stroke.

7. Clean off any grease or contamination from the boot installation grooves (A) around the gearbox housing. Install the boots (B) on the rack ends with the tie-rod clips (C), and fit the boot end in the installation grooves in the housing properly.

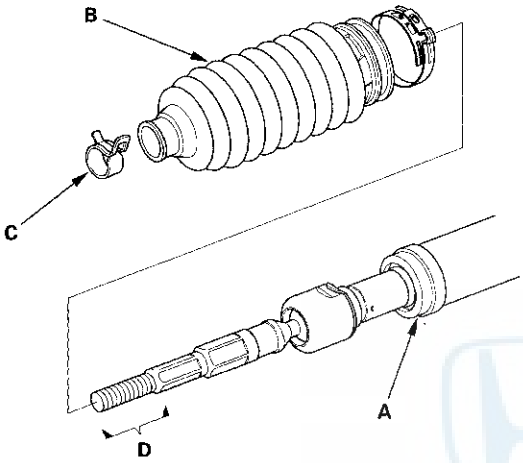

8. After installing the boots, wipe the grease off the thread section (D) of the rack end.

9. Install the new boot bands by aligning the tabs (A) with the holes (B) of the band.

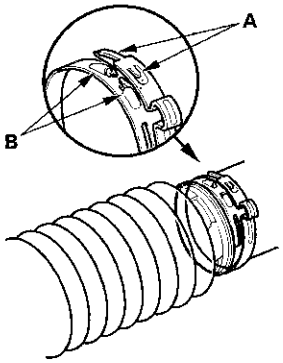

10. Close the ear portion (A) of the band (B) with commercially available pincers, Oetiker 1098 or equivalent (C).

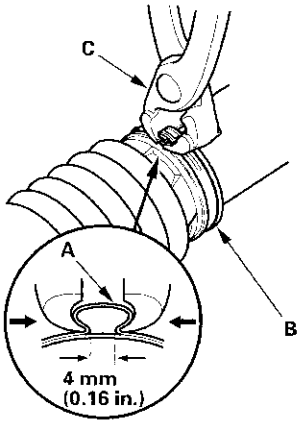

11. Slide the rack shaft right and left to be certain that the boots are not deformed or twisted.

Rack Guide Removal/Installation

NOTE: During removal/installation, do not allow dust, dirt, or other foreign materials to enter the steering gearbox.

1. Remove the steering gearbox (see page 17-65).

2. Loosen the locknut (A), then remove the rack guide screw (B), the spring (C), the disc washer (D), and the rack guide (E).

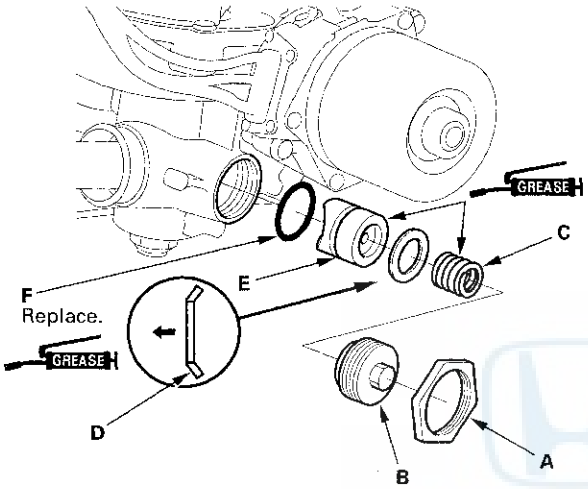

3. Replace the O-ring (F) from the rack guide. Wipe the grease off the sliding surface of the rack guide.

4. Apply multipurpose grease to the new O-ring, then install it to the rack guide.

5. Apply multipurpose grease to the sliding surface and the circumference of the rack guide, and install it onto the gearbox housing. Wipe the grease off the threaded section of the housing.

6. Apply multipurpose grease to both ends of the spring and install it onto the gearbox housing.

7. Install the disc washer with its convex side facing the rack guide.

8. Remove the old sealant from the rack guide screw and apply new sealant (Three Bond 1215 or Loctite 5699) to the middle of the threads. Loosely install the rack guide screw on the steering gearbox.

   NOTE: If more than 5 minutes has passed after applying the sealant, remove the old sealant and residue, and reapply new sealant.

9. Loosely install the locknut.

10. Adjust the rack guide screw (see page 17-16). After adjusting, check that the rack moves smoothly by sliding the rack right and left.

EPS Control Unit Removal/Installation

1. Do the battery terminal disconnection procedure (see page 22-62).

2. Remove the passenger's dashboard undercover (see page 20-90).

3. Remove the passenger's kick panel (see page 20-54).

4. Disconnect EPS control unit connector A (2P), connector B (2P), connector C (2P), and connector D (28P).

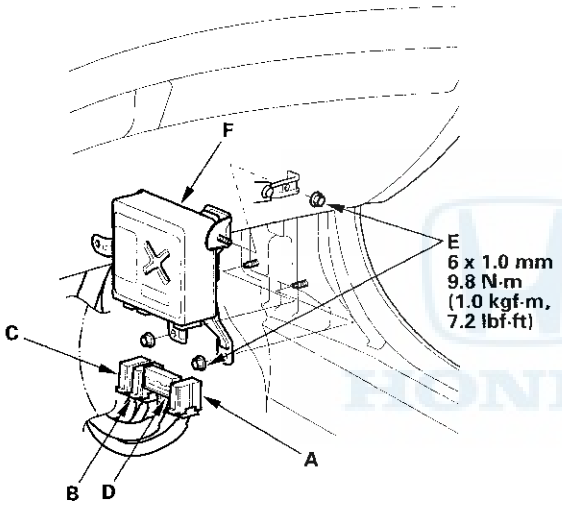

5. Remove the nuts (E) from the EPS control unit (F).

6. Remove the EPS control unit.

7. Install the EPS control unit in the reverse order of removal.

8. Do the battery terminal reconnection procedure (see page 22-62), and do these tasks:

   NOTE:
   - If the IMA battery level gauge (BAT) displays no segments, start the engine, and hold it between 3,500 rpm and 4,000 rpm without load (in Park or neutral) until the BAT displays at least three segments.
   - If the EPS control unit is replaced, the EPS control unit must memorize the torque sensor neutral position (see page 17-22).

9. After installation, start the engine, and let it idle. Turn the steering wheel from lock-to-lock several times. Check that the EPS indicator does not come on.

Tie-rod End Ball Joint Boot Replacement

Special Tools Required
Bushing base 07JAF-SH20330

1. Disconnect the tie-rod ball joint from the knuckle (see step 16 on page 17-66).

2. Remove the tie-rod end from the rack end.

3. Remove the tie-rod ball joint boot from the tie-rod end, and wipe the old grease off the ball pin.

4. Pack the lower area of the ball pin (A) with fresh multipurpose grease.

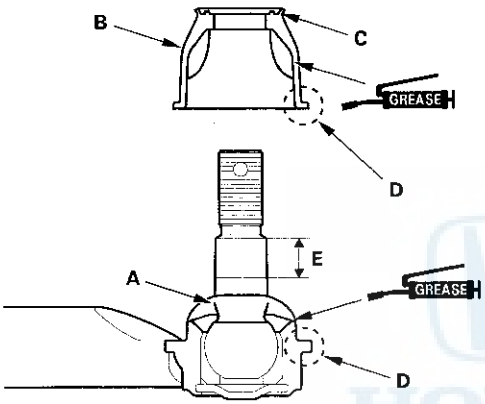

5. Pack the interior of the new tie-rod ball joint boot (B) and lip (C) with fresh multipurpose grease.

   Note these items when installing new grease:
   - Keep grease off the boot mounting area (D) and the tapered section (E) of the ball pin.
   - Do not allow dust, dirt, or other foreign materials to enter the boot.

6. Install the new tie-rod ball joint boot (A) using the bushing base. The boot must not have a gap at the boot installation sections (B). After installing the boot, check the ball pin tapered section for grease contamination, and wipe it if necessary.

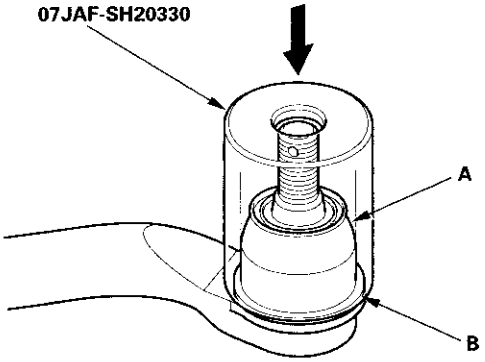

7. Install the tie-rod end to the rack end.

8. Connect the tie-rod ball joint to the knuckle (see step 22 on page 17-74).

9. Check the wheel alignment, and adjust it if necessary (see page 18-6).

Gearbox Mount Cushion Replacement

1. Remove a steering gearbox (see page 17-65).

2. Position a 34 mm socket wrench (A) on the flange part of the gearbox housing with a washer (B), a 10 x 105 mm flange bolt (C), and a 10 mm nut (D) as shown.

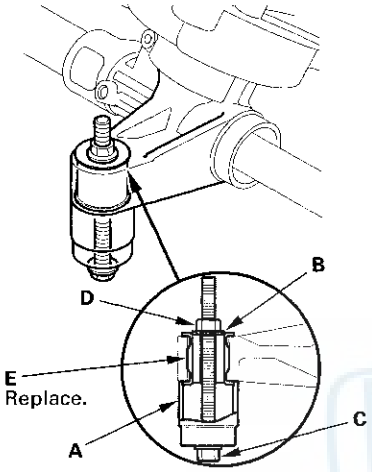

3. Hold the 10 mm nut with a wrench, and tighten the 10 x 105 mm flange bolt with another wrench. Remove the gearbox mount cushion (E).

4. Apply a mild soap and water solution to the new gearbox mount cushion surface (A), then place the mount cushion on the gearbox mounting cushion hole.

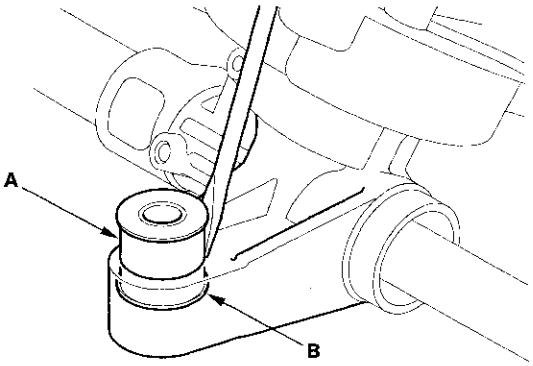

5. Using a flat-tipped screwdriver, push the edge of the mount cushion (B) until it is about 1/3 of the way into the gearbox housing.

   NOTE: Be careful not to damage the surface of the mount cushion when pushing it with the flat-tipped screwdriver.

6. Position a 34 mm socket wrench on the flange part of the gearbox housing with a washer, flange bolt, and a nut as shown.

7. Install the gearbox mount cushion by tightening the nut until the mount cushion edges (A) contact the gearbox flange surface.

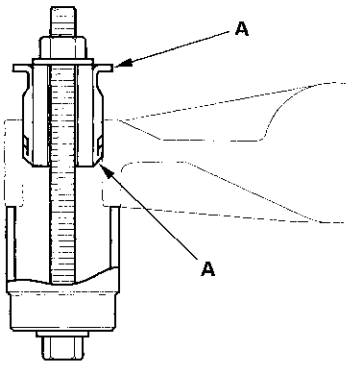

8. Install the steering gearbox (see page 17-71).

9. Check the wheel alignment, and adjust it if necessary (see page 18-6).

Suspension

Front and Rear Suspension

Special Tools 18-2
Component Location Index 18-3
Wheel Alignment 18-6
Wheel Bearing End Play Inspection 18-10
Wheel Runout Inspection 18-10
Wheel Bolt Replacement 18-11
Ball Joint Removal 18-12
Ball Joint Boot Inspection/Replacement 18-13

Front Suspension

Knuckle/Hub/Wheel Bearing Replacement 18-14
Lower Ball Joint Replacement 18-20
Lower Arm Removal/Installation 18-22
Stabilizer Link Removal/Installation 18-25
Stabilizer Bar Replacement 18-25
Damper/Spring Removal and Installation 18-26
Damper/Spring Disassembly,
Inspection, and Reassembly 18-28

Rear Suspension

Knuckle/Hub Bearing Unit Replacement 18-31
Upper Arm Removal/Installation 18-38
Trailing Arm Removal/Installation 18-39
Stabilizer Link Removal/Installation 18-40
Stabilizer Bar Replacement 18-41
Damper Replacement 18-42
Spring Replacement 18-45

TPMS (Tire Pressure Monitoring System) ('08-09 USA Models) 18-51

Special Tools

Ref. No.	Tool Number	Description	Qty
①	07AAA-SVAA100	Strut Nut Adapter	1
②	07AAF-SDAA100	Ball Joint Thread Protector, 12 mm	1
③	07AAF-SVAA100	Bushing Driver	1
④	07AAF-SVAA200	Receiver Set	1
⑤	07GAF-SE00100	Hub Dis/Assembly Tool	1
⑥	07GAF-SE00200	Attachment, 40 mm	1
⑦	07MAC-SL0A102	Ball Joint Remover, 32 mm	1
⑧	07MAC-SL0A202	Ball Joint Remover, 28 mm	1
⑨	071AF-S3VA000	Ball Joint Thread Protector, 14 mm	1
⑩	07746-0010500	Attachment, 62 x 68 mm	1
⑪	07749-0010000	Driver Handle	1
⑫	07965-SD90100	Support Base	1

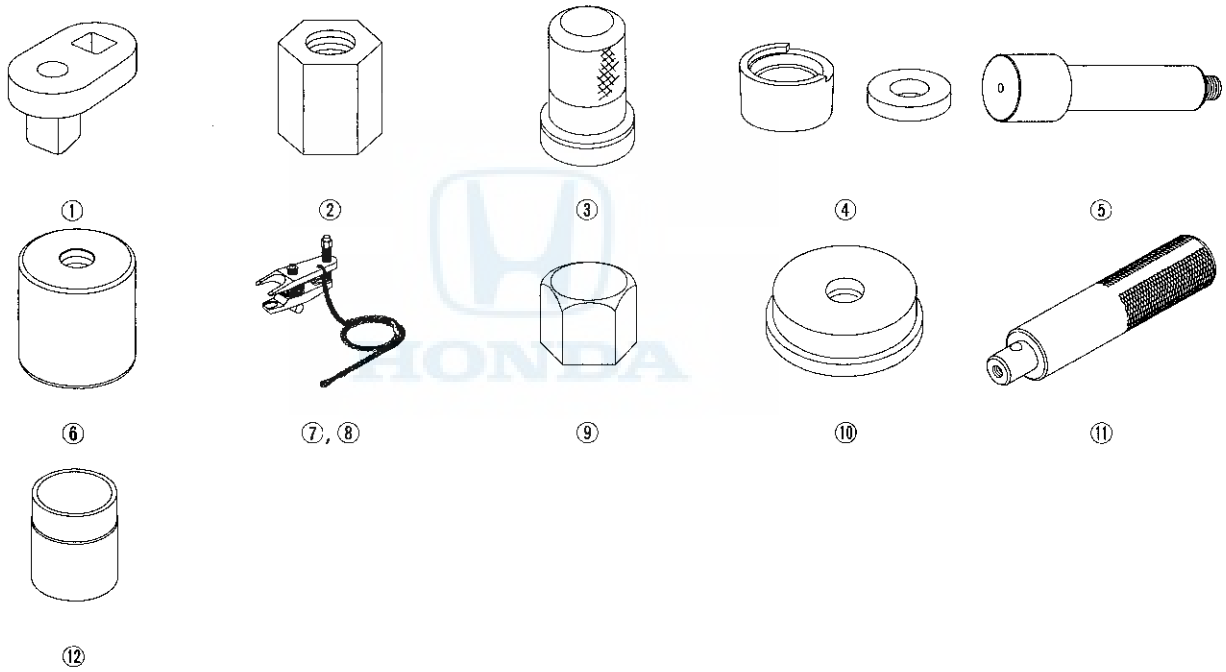

Component Location Index

Front Suspension

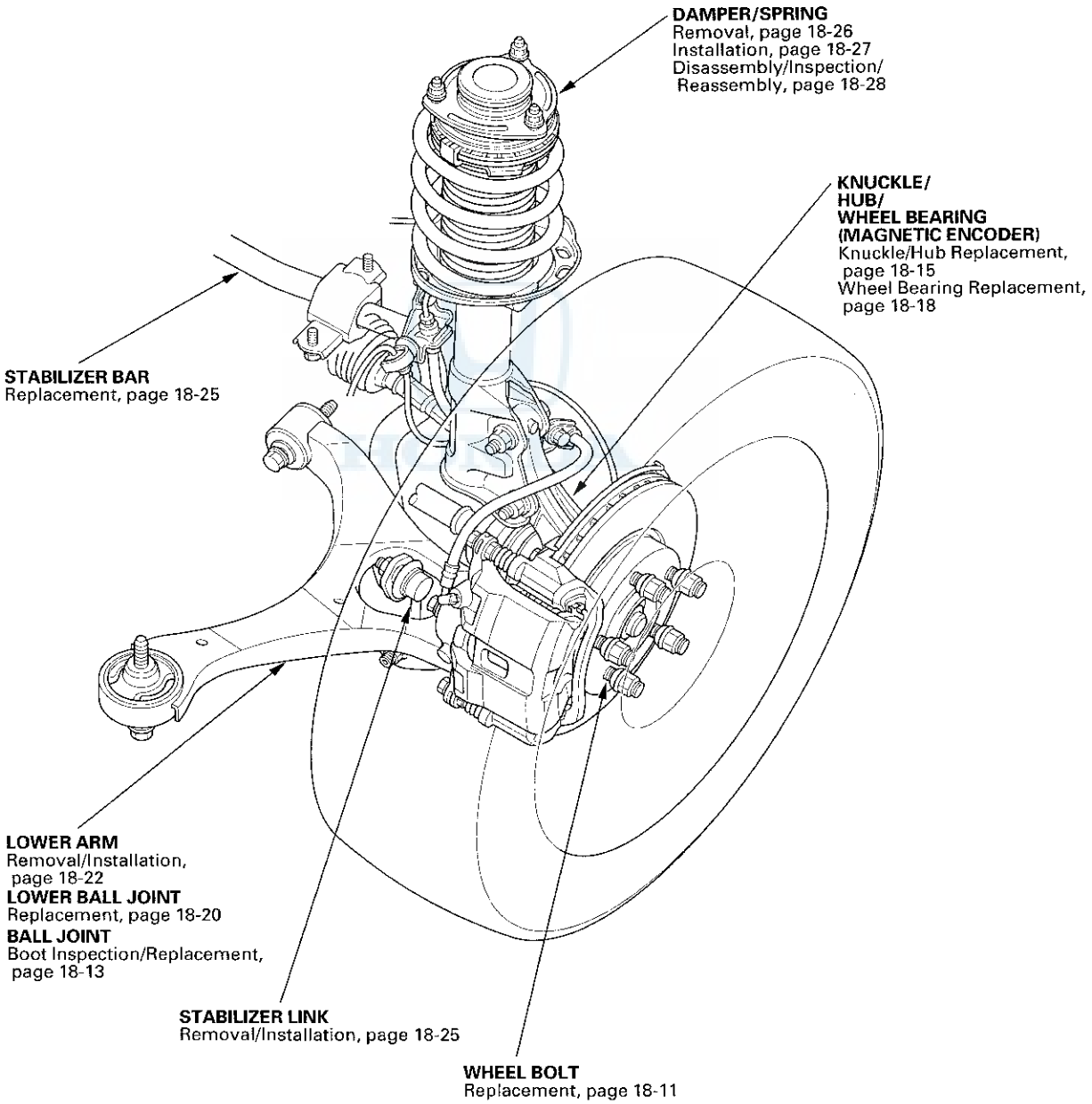

Component Location Index (cont'd)

Rear Suspension - Disc Brake Type

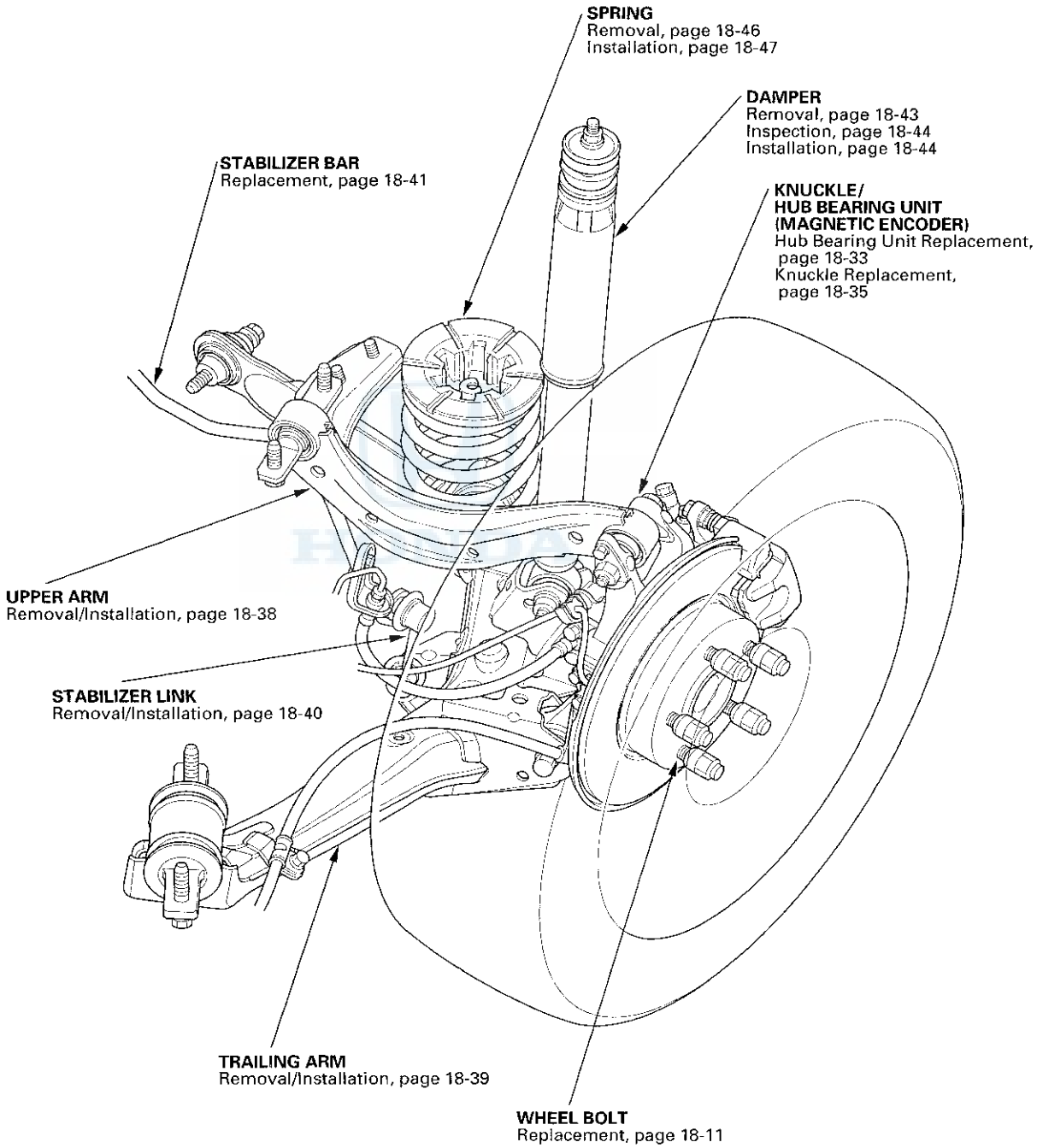

Rear Suspension - Drum Brake Type

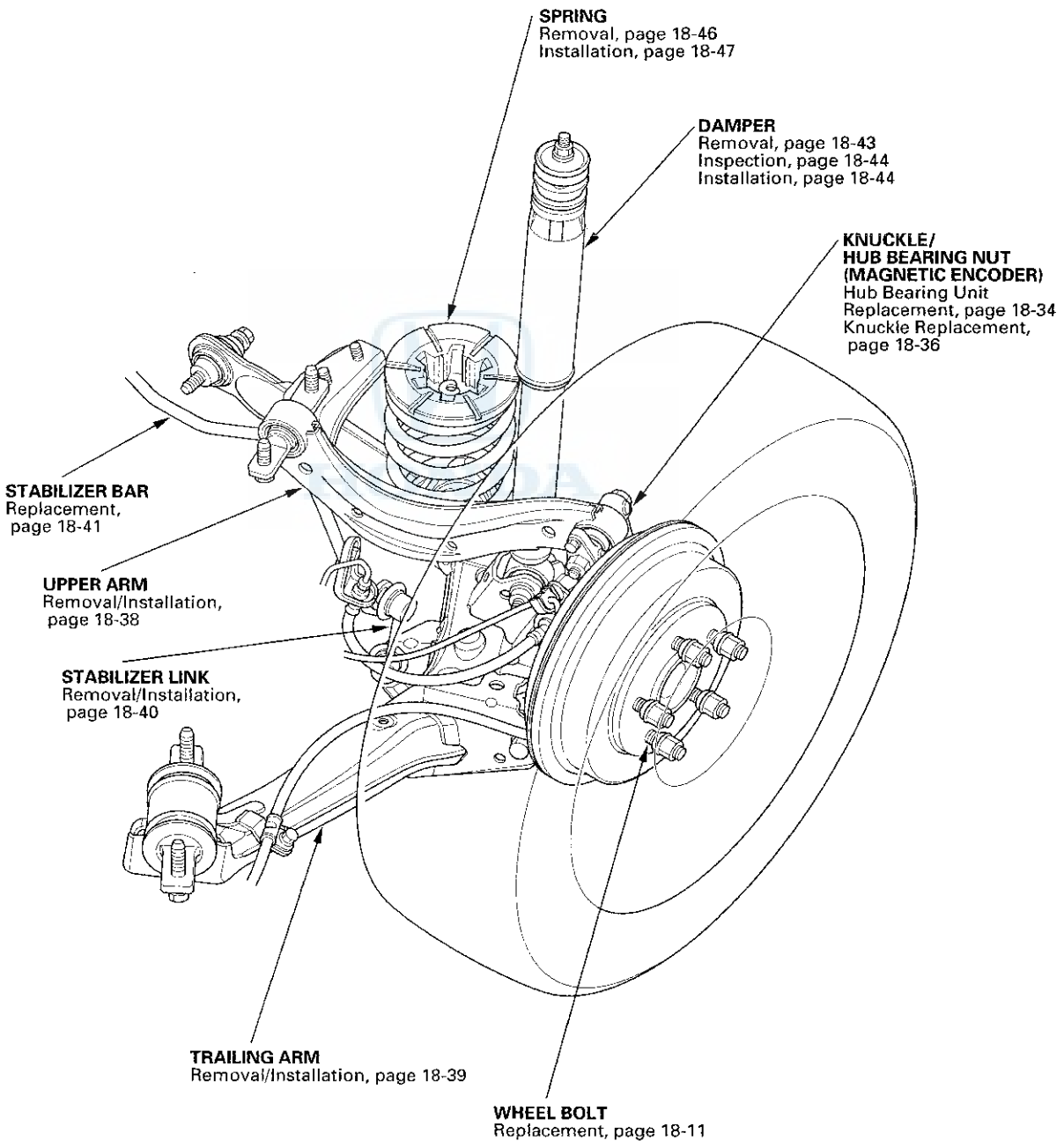

Wheel Alignment

The suspension can be adjusted for front camber, front toe, and rear toe. However, each of these adjustments are related to each other. For example, when you adjust camber, the toe will change. Therefore, you must adjust the front wheel alignment whenever you adjust camber or toe.

Pre-Alignment Checks

For proper inspection and adjustment of the wheel alignment, do these checks:

1. Release the parking brake to avoid an incorrect measurement.
2. Make sure the suspension is not modified.
3. Make sure the fuel tank is full, and that the spare tire, the jack, and the tools are in place on the vehicle.
4. Check the tire size and tire pressure.

   Tire size:
   Front/Rear: P195/65R15 89S

   Tire pressure (at cold):
   Front/Rear: 220 kPa (2.2 kgf/cm^2, 32 psi)

5. Check the runout of the wheels and tires (see page 18-10).
6. Check the suspension ball joints (Hold a tire with your hands, and move it up and down and right and left to check for movement).

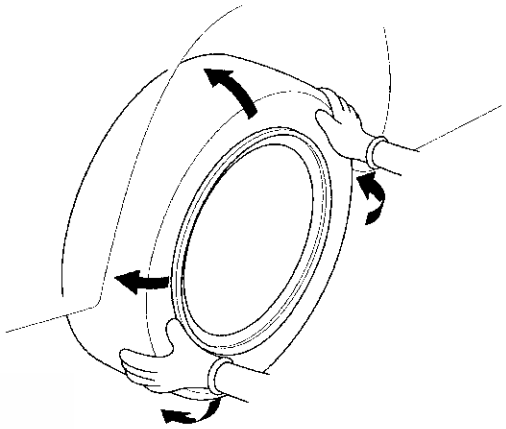

7. Before doing alignment inspections, be sure to remove all extra weight from the vehicle, and no one should be inside the vehicle (driver or passengers).
8. Bounce the vehicle up and down several times to stabilize the suspension.
9. Check that the steering column is set at the center tilt and telescopic position.

Caster Inspection

Use commercially available computerized four wheel alignment equipment to measure wheel alignment (caster, camber, toe, and turning angle). Follow the equipment manufacturer's instructions.

1. Check the caster angle.

   Caster angle: 7°06′±1°

   - If the measurement is within specifications, measure the camber angle.
   - If the measurement is not within specifications, check for bent or damaged suspension components.

Camber Inspection

Use commercially available computerized four wheel alignment equipment to measure wheel alignment (caster, camber, toe, and turning angle). Follow the equipment manufacturer's instructions.

1. Check the camber angle.

   NOTE: There are two types of rear upper arms: those that are marked with "C" (A), and those with no marks. Be sure to use the correct alignment specifications.

   Camber angle:
   Front: −0 °03 ′ ±30 ′
   (Maximum difference between the front right and left side: 0 °35 ′)
   Rear (without "C" marks on the upper arm): −1 °39 ′ $^{+1°05'}_{-0°45'}$
   Rear (with "C" marks on the upper arm): −0 °54 ′ $^{+1°05'}_{-0°45'}$

   - If the measurement is within specification, measure the toe-in.
   - If the measurement for the front camber is outside the specification, go to the front camber adjustment.
   - If the measurement for the rear camber is outside the specification, check for bent or damaged suspension components.

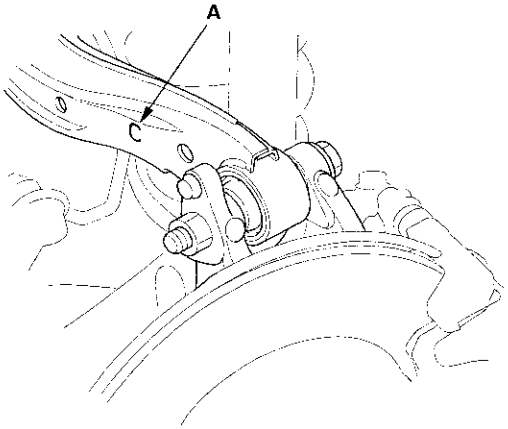

Front Camber Adjustment

The front camber can be adjusted by exchanging one or both of the damper pinch bolts with a smaller diameter adjusting bolt. The difference between the adjusting bolt diameter and the pinch bolt hole diameter allows for a small range of adjustment.

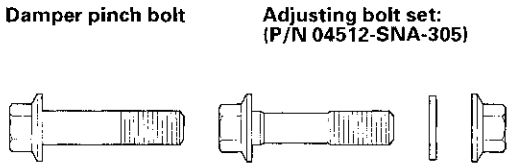

1. Raise the front of the vehicle, and support it with safety stands in the proper locations (see page 1-10).

2. Remove the front wheels.

3. Loosen the damper pinch bolts (A), and adjust the camber angle by moving the bottom of the damper within the range of the damper pinch bolt free play.

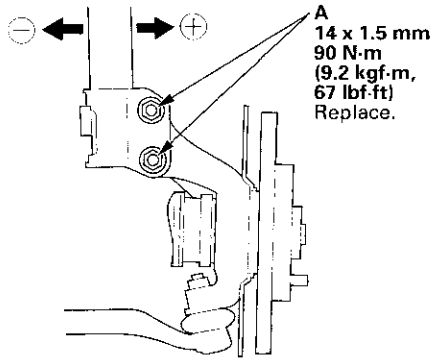

4. Tighten the damper pinch bolts to the specified torque.

5. Clean the mating surfaces of the brake disc and the inside of the wheel, then install the front wheels.

6. Lower the vehicle to the ground, and bounce the front of the vehicle up and down several times to stabilize the suspension.

(cont'd)

Wheel Alignment (cont'd)

7. Measure the camber angle.

   - If the measurement is within specification, measure the toe-in.
   - If the measurement is not within specification, go to step 8.

8. Raise the front of the vehicle, and support it with safety stands in the proper locations (see page 1-10).

9. Remove the front wheels.

10. Replace the damper pinch bolts with the adjusting bolts (A), and adjust the camber angle.

    NOTE:
    - Install the washers (B) included the adjusting bolt set between the front damper and the self-locking nut.
    - The camber angle can be adjusted up to ±25 ′ (center of tolerance) by replacing one damper pinch bolt with the adjusting bolt.
    - The camber angle can be adjusted up to 50 ′ by replacing both damper pinch bolts with the adjusting bolts.

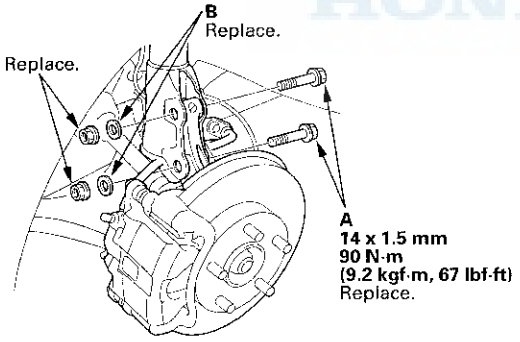

11. Tighten the adjusting bolts to the specified torque value.

12. Clean the mating surfaces of the brake disc and the inside of the wheel, then install the front wheels.

13. Lower the vehicle to the ground, and bounce the front of the vehicle up and down several times to stabilize the suspension.

14. Measure the camber angle. If the camber angle is not within specification, repeat steps 8 through 13 to readjust the camber angle. If the camber measurement is correct, measure the toe-in, and adjust it if necessary.

Front Toe Inspection/Adjustment

Use commercially available computerized four wheel alignment equipment to measure wheel alignment (caster, camber, toe, and turning angle). Follow the equipment manufacturer's instructions.

1. Set the steering column to the middle tilt and center telescopic positions. Center the steering wheel spokes, and install a steering wheel holder tool.

2. Check the toe with the wheels pointed straight ahead.

   Front toe-in: 0±2 mm (0±0.08 in.)

   - If adjustment is required, go to step 3.
   - If no adjustment is required, go to rear toe inspection/adjustment.

3. Loosen the tie-rod locknuts (A) while holding the flat surface sections (B) of the tie-rod end with a wrench, and turn both tie-rods (C) until the front toe is within specifications.

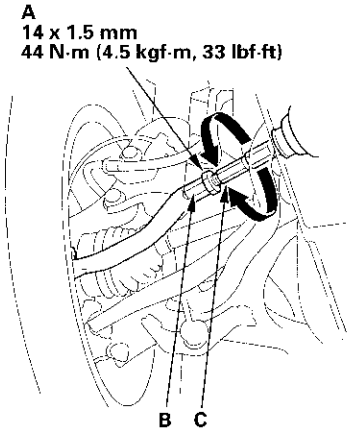

4. After adjusting, tighten the tie-rod locknuts to the specified torque value. Reposition the rack-end boot if it is twisted or displaced.

5. Go to rear toe inspection/adjustment.

Rear Toe Inspection/Adjustment

Use commercially available computerized four wheel alignment equipment to measure wheel alignment (caster, camber, toe, and turning angle). Follow the equipment manufacturer's instructions.

1. Release the parking brake to avoid an incorrect measurement.

2. Check the toe.

   Rear toe-in: 2^{+2}_{-1} mm ($0.08^{+0.08}_{-0.04}$ in.)

   - If adjustment is required, go to step 3.
   - If no adjustment is required, go to turning angle inspection.

3. Hold the adjusting bolt (A) on the trailing arm (B), and loosen the self-locking nut (C).

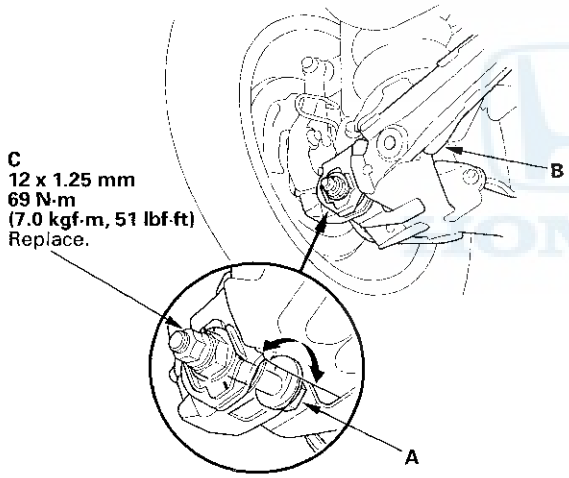

4. Replace the self-locking nut with a new one, and lightly tighten it.

   NOTE:
   - Always use a new self-locking nut whenever it has been tightened to the specified torque.
   - Reassemble the adjusting bolt and the adjusting cam plate with the eccentric facing up.

5. Adjust the rear toe by turning the adjusting bolt until the toe is correct.

6. Tighten the self-locking nut to the specified torque value while holding the adjusting bolt.

Turning Angle Inspection

Use commercially available computerized four wheel alignment equipment to measure wheel alignment (caster, camber, toe, and turning angle). Follow the equipment manufacturer's instructions.

1. Turn the wheel right and left while applying the brake, and measure the turning angle of both wheels.

   Turning angle:

Inward wheel:	**39 ° 53 ′ ±2 °**
Outward wheel (reference):	**31 ° 48 ′**

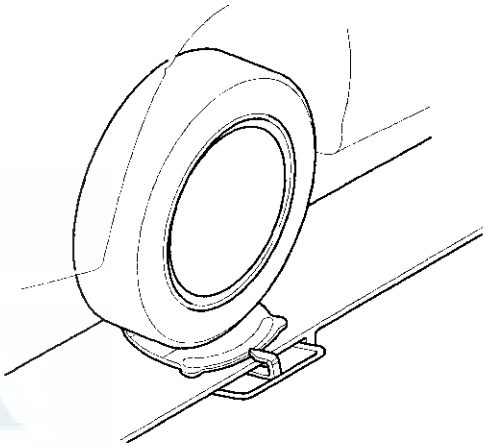

2. If the measurement is not within the specifications, even up both sides of the tie-rod threaded section length while adjusting the front toe. If it is correct, but the turning angle is not within the specifications, check for bent or damaged suspension components.

Wheel Bearing End Play Inspection

1. Raise the vehicle, and support it with safety stands in the proper locations (see page 1-10).

2. Remove the wheels.

3. Install suitable flat washers (A) and the wheel nuts. Tighten the nuts to the specified torque to hold the brake disc or the brake drum securely against the hub.

Front

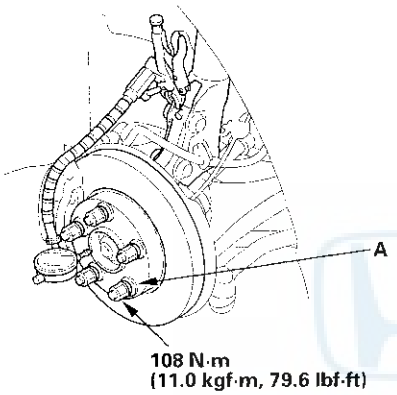

Rear

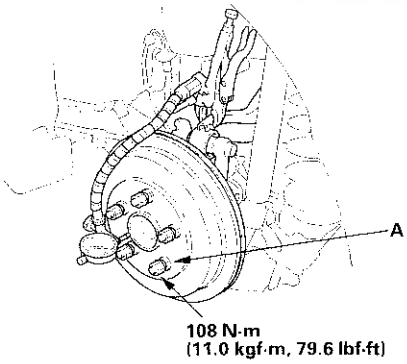

4. Attach the dial gauge. Place the dial gauge against the hub flange.

5. Measure the bearing end play while moving the brake disc or the brake drum inward and outward.

   Wheel bearing end play:
   Front/Rear: 0—0.05 mm (0—0.002 in.)

6. If the bearing end play measurement is more than the standard, replace the wheel bearing or the hub bearing unit.

Wheel Runout Inspection

1. Raise the vehicle, and support it with safety stands in the proper locations (see page 1-10).

2. Check for bent or deformed wheels.

3. Set up the dial gauge as shown, and measure the axial runout by turning the wheel.

   Front and rear wheel axial runout:
   Standard: 0—0.7 mm (0—0.03 in.)
   Service limit: 2.0 mm (0.08 in.)

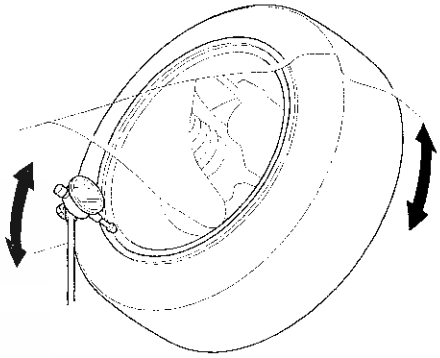

4. Reset the dial gauge to the position shown, and measure the radial runout.

   Front and rear wheel radial runout:
   Standard: 0—0.7 mm (0—0.03 in.)
   Service limit: 1.5 mm (0.06 in.)

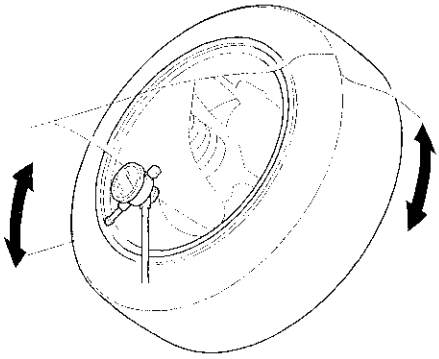

5. If the wheel runout is not within the specification, check the wheel bearing end play (see page 18-10), and make sure the mating surfaces on the brake disc or the brake drum and the inside of the wheel are clean.

6. If the bearing end play is within the specification but the wheel runout is more than the service limit, replace the wheel.

Wheel Bolt Replacement

Special Tools Required
Ball joint remover, 28 mm 07MAC-SL0A202

NOTICE
- Do not use a hammer or impact tools (pneumatic or electric) to remove and install the wheel bolts.
- Be careful not to damage the threads of the wheel bolts.

1. Raise the vehicle, and support it with safety stands in the proper locations (see page 1-10).

2. Remove the brake disc or the brake drum: front (see page 19-18), rear disc brake type (see page 19-25), rear drum brake type (see page 19-29).

3. Separate the wheel bolt (A) from the hub (B) using the ball joint remover (C), and keep the jaw (D) of ball joint remover vertical against the wheel bolt (see page 18-12).

   NOTE:
   - If the angle of the remover against the wheel bolt is not square, readjust the ball joint remover by turning the head (E) of the adjusting bolt (F).
   - Before installing the new wheel bolt, clean the mating surfaces on the bolt and the hub.

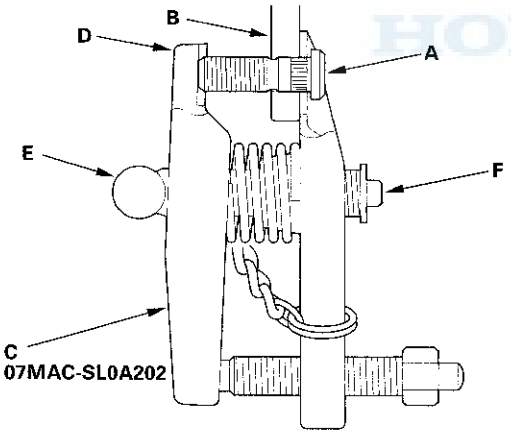

4. Insert the new wheel bolt (A) into the hub (B) while aligning the splined surfaces (C) on the hub hole with the wheel bolt. Adjust the measurement (D) with the washers (P/N 94101-12800 or equivalent) (E), then install a nut (P/N 90304-SC2-000 or equivalent) (F) hand-tight.

   NOTE:
   - Degrease all around the wheel bolt and the threaded section of the nut.
   - Make sure the wheel bolt is installed vertically in relation to the hub disc surface.
   - Do not install the nut and the washers that have been used as tools on a vehicle.

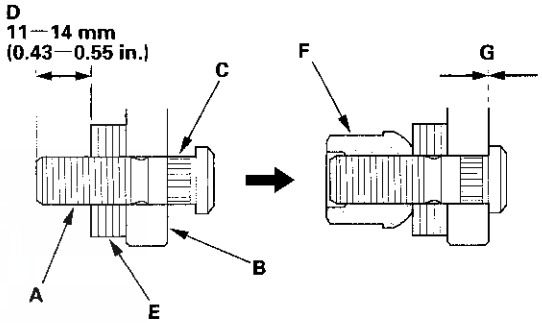

5. Tighten the nut until the wheel bolt is drawn fully into the hub. Do not exceed the maximum torque limit. Make sure there is no gap (G) between the bolt and the hub.

   Limited torque:
   108 N·m (11.0 kgf·m, 79.6 lbf·ft) max.

6. Install the brake disc or the brake drum: front (see page 19-18), rear disc brake type (see page 19-25), rear drum brake type (see page 19-29).

   NOTE:
   - If you cannot tighten the wheel nut to the specified torque value when installing the wheel, replace the front hub or the rear hub bearing unit as an assembly.
   - Before installing the wheel, clean the mating surfaces of the brake disc or the brake drum and the inside of the wheel.

Ball Joint Removal

Special Tools Required
- Ball joint thread protector, 12 mm 07AAF-SDAA100
- Ball joint thread protector, 14 mm 071AF-S3VA000
- Ball joint remover, 32 mm 07MAC-SL0A102
- Ball joint remover, 28 mm 07MAC-SL0A202

NOTICE
Always use a ball joint remover to disconnect a ball joint. Do not strike the housing or any other part of the ball joint connection to disconnect it.

1. Install a hex nut (A) or the ball joint thread protector onto the threads of the ball joint (B).

   NOTE: Using a hex nut, make sure the nut is flush with the ball joint pin end to prevent damage to the threaded end of the ball joint pin.

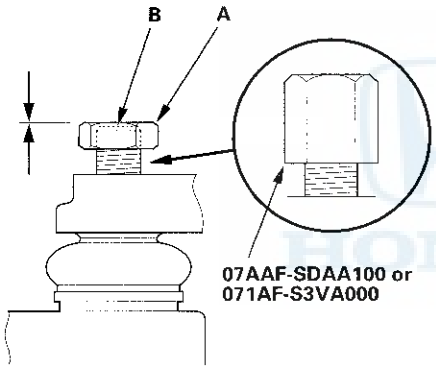

2. Apply grease to the ball joint remover on the areas shown (A). This will ease the installation of the tool, and prevent damage to the pressure bolt (B) threads.

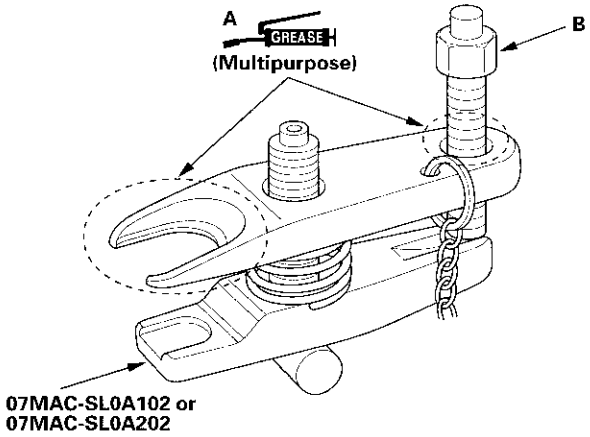

3. Loosen the pressure bolt (A), and install the ball joint remover as shown. Insert the jaws carefully, making sure not to damage the ball joint boot. Adjust the jaw spacing by turning the adjusting bolt (B).

   NOTE: Fasten the safety chain (C) securely to a suspension arm or the subframe (D). Do not fasten it to a brake line or wire harness.

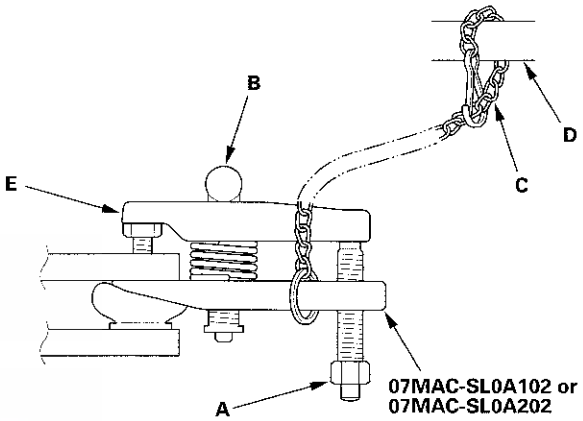

4. After adjusting the adjusting bolt, make sure the head of the adjusting bolt is in the position shown to allow the jaw (E) to pivot.

5. With a wrench, tighten the pressure bolt until the ball joint pin pops loose from the ball joint connecting hole. If necessary, apply penetrating type lubricant to loosen the ball joint pin.

   NOTE: Do not use pneumatic or electric tools on the pressure bolt.

6. Remove the ball joint remover, then remove the nut from the end of the ball joint pin, and pull the ball joint out of the ball joint connecting hole. Inspect the ball joint boot, and replace it if damaged.

Ball Joint Boot Inspection/Replacement

Special Tools Required
Attachment, 40 mm 07GAF-SE00200

1. Check the ball joint boot for weakness, damage, cracks, and grease leaks.

   NOTE:
   - If the ball joint boot is damaged with grease leaks, replace the appropriate part as an assembly.
   - If the ball joint boot is soft and cracked without grease leaks, go to step 2. Replace the appropriate ball joint boot.

2. Disconnect the appropriate ball joint connection, and remove the component including the ball joint: The lower ball joint (see page 18-20).

3. Remove the boot.

4. Pack the interior and lip (A) of a new boot with grease. Keep the grease off of the boot-to-lower ball joint housing mating surfaces (B).

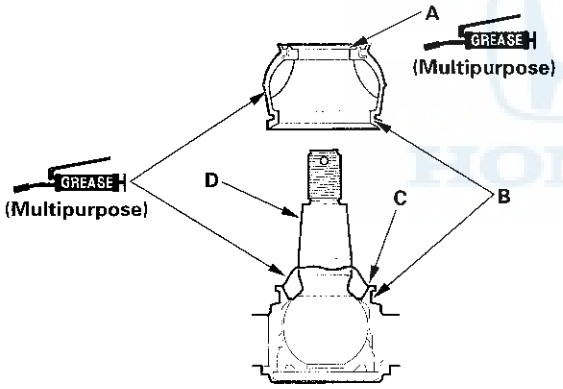

5. Pack fresh grease into the base (C). Do not let dirt or other foreign materials get into the boot.

6. Install the boot on the ball joint, then squeeze it gently to force out any air, then wipe the grease off the tapered portion of the ball joint pin (D).

7. Press the boot with the attachment until the bottom seats on the lower ball joint housing (A) all the way around.

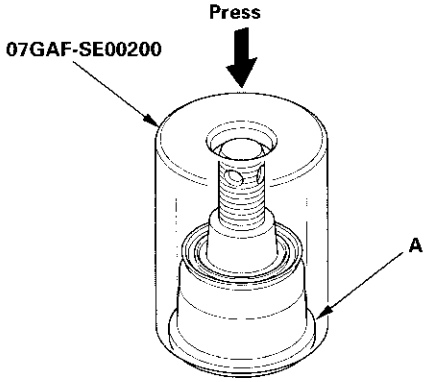

8. After installing a boot, wipe any grease off the exposed portion of the ball joint pin.

9. Install all of the removed parts.

Knuckle/Hub/Wheel Bearing Replacement

Exploded View

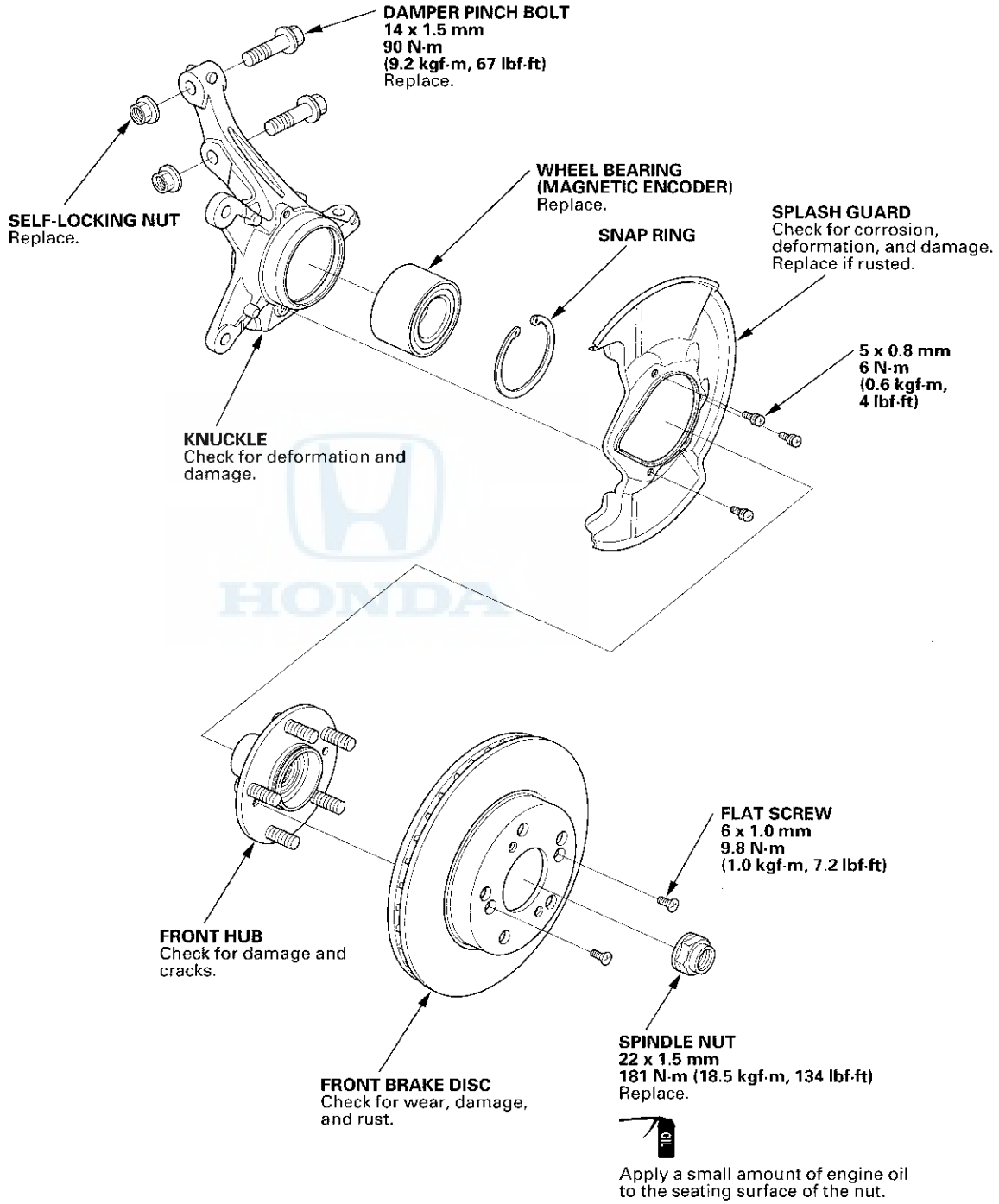

Special Tools Required
- Ball joint thread protector, 12 mm 07AAF-SDAA100
- Ball joint remover, 28 mm 07MAC-SL0A202
- Ball joint thread protector, 14 mm 071AF-S3VA000
- Ball joint remover, 32 mm 07MAC-SL0A102
- Hub dis/assembly tool 07GAF-SE00100
- Driver handle 07749-0010000
- Attachment, 62 x 68 mm 07746-0010500
- Support base 07965-SD90100

Knuckle/Hub Replacement

1. Raise the front of the vehicle, and support it with safety stands in the proper locations (see page 1-10).

2. Remove the center cap (A), the wheel nuts (B) and the front wheel.

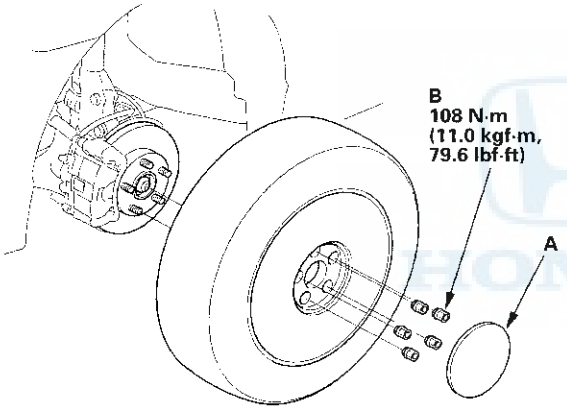

3. Remove the brake hose mounting bolt (A) from the damper.

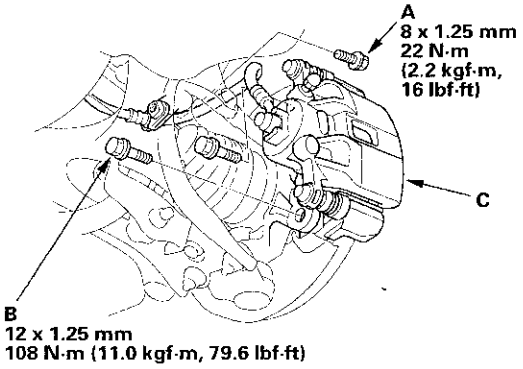

4. Remove the brake caliper bracket mounting bolts (B), then remove the caliper assembly (C) from the knuckle. To prevent damage to the caliper assembly or the brake hose, use a short piece of wire to hang the caliper assembly from the undercarriage. Do not twist the brake hose excessively.

5. Remove the wheel speed sensor (A) from the knuckle (B). Do not disconnect the wheel speed sensor connector.

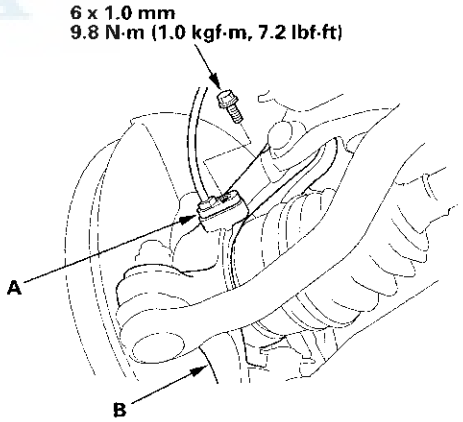

(cont'd)

Knuckle/Hub/Wheel Bearing Replacement (cont'd)

6. Raise the stake (A), then remove the spindle nut (B).

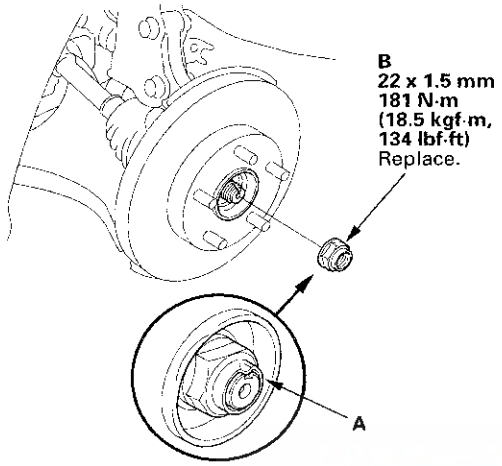

7. Remove the front brake disc (see page 19-18).

8. Check the front hub for damage and cracks.

9. Remove the cotter pin (A) from the tie-rod end ball joint, then remove the nut (B).

   NOTE: During installation, install the new cotter pin after tightening the nut, and bend its end as shown.

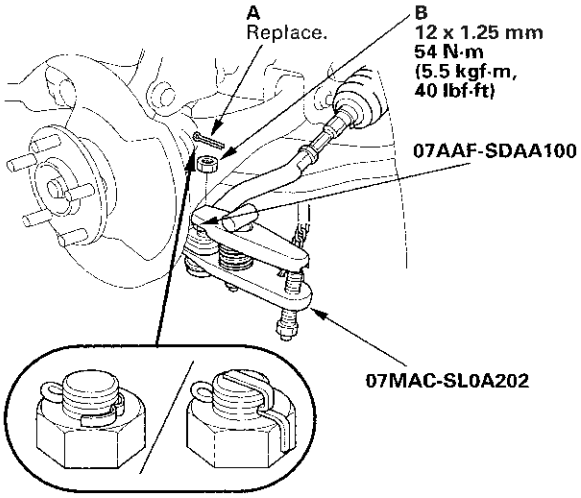

10. Disconnect the tie-rod end ball joint from the knuckle using the ball joint thread protector and the ball joint remover (see page 18-12).

11. Remove the flange bolt and the self-locking nuts from the lower arm (A).

    NOTE: During installation, install the new flange bolt and the new self-locking nuts. After lightly tightening all three fasteners, tighten them to the specified torque in the following order; the nut on the front (B), the nut on the rear (C), then the bolt (D).

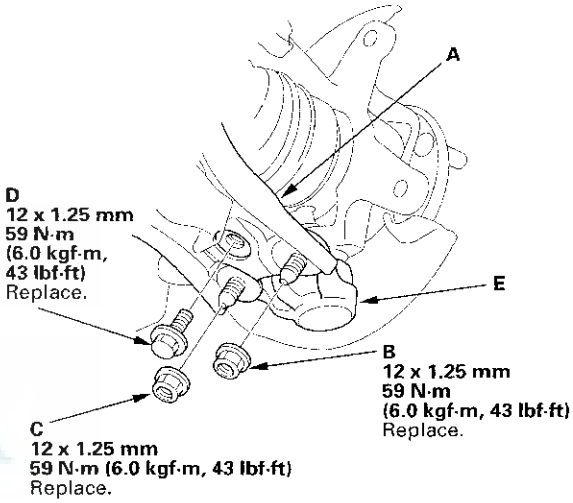

12. Disconnect the lower ball joint (E) from the lower arm.

13. Remove the damper pinch bolts (A) and the self-locking nuts (B) from the damper.

NOTE: Use new damper pinch bolts and new self-locking nuts during reassembly.

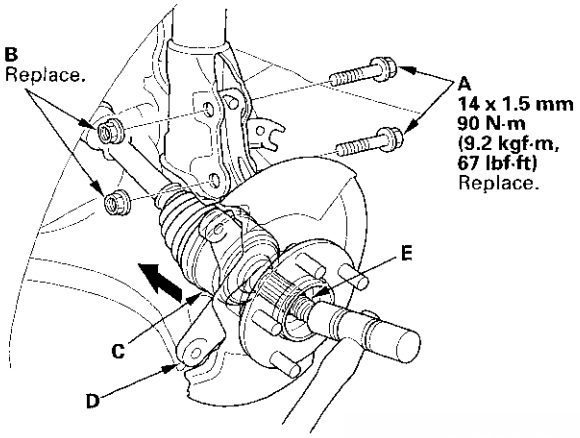

14. Remove the driveshaft outboard joint (C) from the knuckle (D) by tapping the driveshaft end (E) with a soft face hammer while drawing the hub outward, then remove the knuckle.

NOTE:
- Do not pull the driveshaft end outward. The inner driveshaft inboard joint may come apart.
- During installation, apply grease to the mating surfaces of the wheel bearing and the driveshaft outboard joint (see step 1 on page 16-20).

15. Remove the lock pin (A) from the lower ball joint, then remove the castle nut (B).

NOTE: During installation, install a lock pin as shown after tightening the new castle nut.

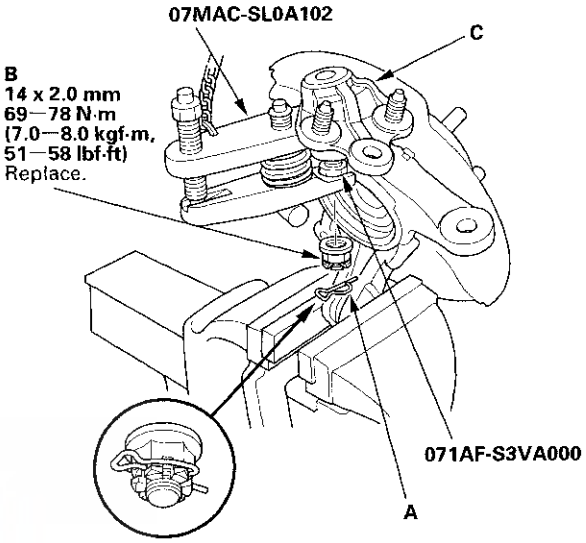

16. Disconnect the lower ball joint (C) from the knuckle using the ball joint thread protector and the ball joint remover (see page 18-12).

(cont'd)

Knuckle/Hub/Wheel Bearing Replacement (cont'd)

17. Install the knuckle/hub in the reverse order of removal, and note these items:

    - First install all of the components, and lightly tighten the bolts and the nuts, then raise the suspension to load it with the vehicle's weight before fully tightening to the specified torque values.
    - Be careful not to damage the ball joint boot when connecting the knuckle.
    - Before connecting the lower ball joint to the knuckle, degrease the threaded section and the tapered portion of the ball joint pin, the ball joint connecting hole, the threaded section, and the mating surfaces of the castle nut.
    - Torque the castle nut to the lower torque specification, then tighten it only far enough to align the slot with the ball joint pin hole. Do not align the castle nut by loosening it.
    - Use a new spindle nut on reassembly.
    - Before installing the spindle nut, apply a small amount of engine oil to the seating surface of the nut. After tightening, use a drift to stake the spindle nut shoulder against the driveshaft.
    - Before installing the brake disc, clean the mating surfaces of the front hub and the inside of the brake disc.
    - Before installing the wheel, clean the mating surfaces of the brake disc and the inside of the wheel.

18. Check the wheel alignment, and adjust it if necessary (see page 18-6).

Wheel Bearing Replacement

1. Separate the hub (A) from the knuckle (B) using the hub dis/assembly tool and a hydraulic press. Hold the knuckle with the attachment (C) of the hydraulic press or equivalent tool. Be careful not to damage or deform the splash guard (D). Hold onto the hub to keep it from falling when pressed clear.

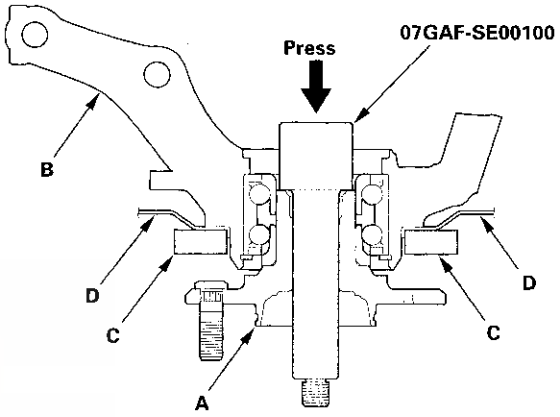

2. Press the wheel bearing inner race (A) off of the hub (B) using the hub dis/assembly tool, a commercially available bearing separator (C), and a press.

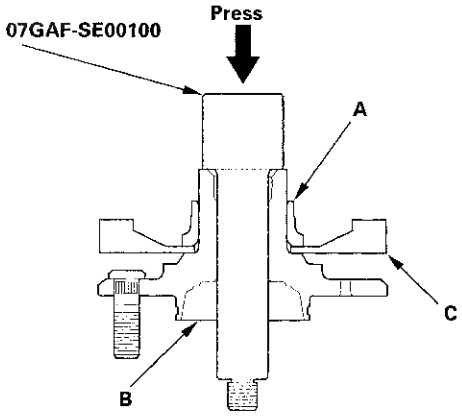

3. Remove the splash guard (A) and the snap ring (B) from the knuckle (C).

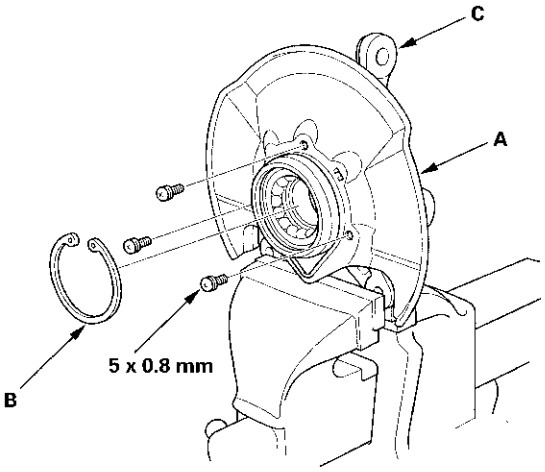

4. Press the wheel bearing (A) out of the knuckle (B) using the attachment, the driver handle, and a press.

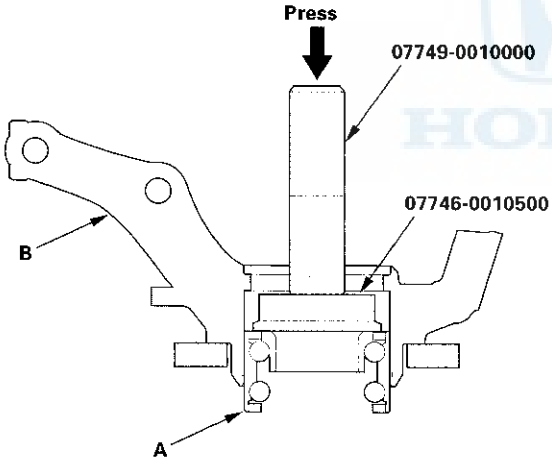

5. Wash the knuckle and the hub thoroughly in high flash point solvent before reassembly.

6. Press a new wheel bearing (A) into the knuckle (B) using the old bearing (C), a steel plate (D), the support base and a press.

NOTE:
- Install the wheel bearing with the wheel speed sensor magnetic encoder (E) (brown color), toward the inside of the knuckle.
- Remove any oil, grease, dust, metal debris, and other foreign material from the encoder surface.
- Keep all magnetic tools away from the encoder surface.
- Be careful not to damage the encoder surface when you insert the wheel bearing.

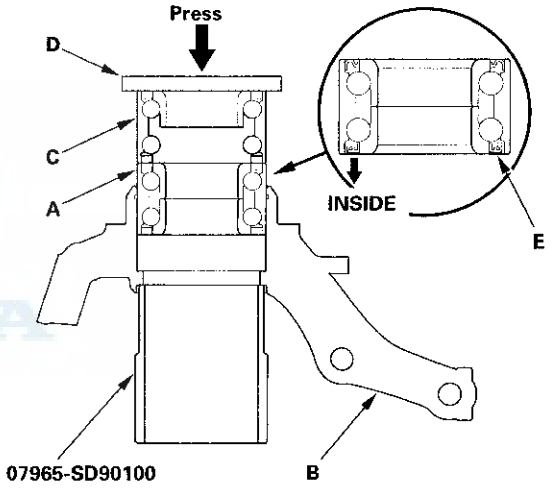

(cont'd)

Knuckle/Hub/Wheel Bearing Replacement (cont'd)

7. Install the snap ring (A) securely in the knuckle (B).

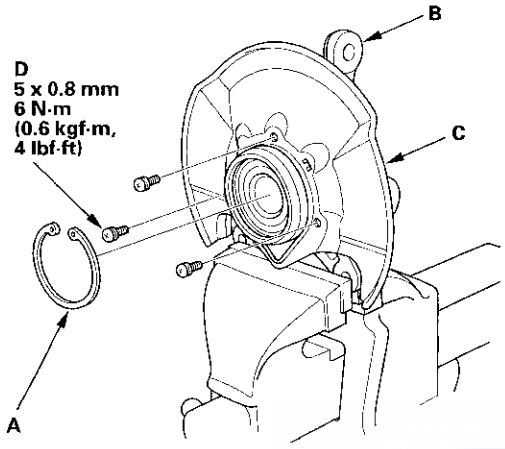

8. Install the splash guard (C), and tighten the screws (D) to the specified torque value.

9. Install the hub (A) onto the knuckle (B) using the attachment, the driver handle, the support base, and a hydraulic press. Be careful not to damage the splash guard (C).

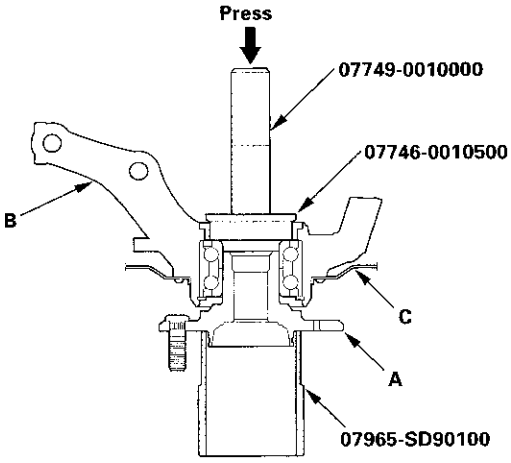

Lower Ball Joint Replacement

Special Tools Required
- Ball joint remover, 32 mm 07MAC-SL0A102
- Ball joint thread protector, 14 mm 071AF-S3VA000

1. Remove the front wheel.

2. Remove the flange bolt and the self-locking nuts from the lower arm (A).

   NOTE: During installation, install the new flange bolt and the new self-locking nuts. After lightly tightening all three fasteners, tighten them to the specified torque in the following order; the nut on the front (B), the nut on the rear (C) then the bolt (D).

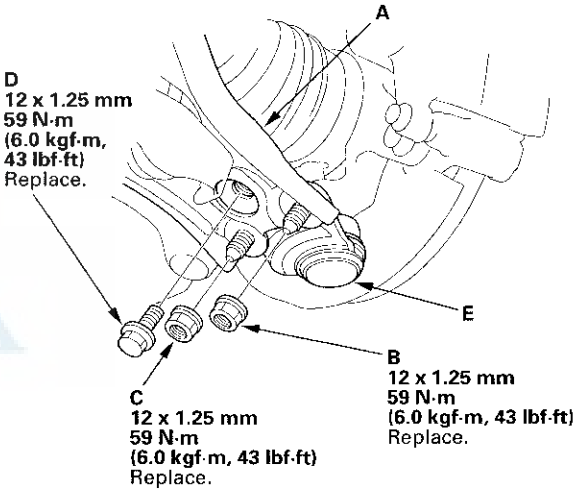

3. Disconnect the lower ball joint (E) from the lower arm.

4. Remove the spindle nut (see step 6 on page 18-16), and remove the outboard joint (A) from the knuckle (B) by tapping the driveshaft end (C) with a soft face hammer while drawing the hub outward.

   NOTE:
   - Do not pull the driveshaft end outward. The driveshaft inboard joint may come apart.
   - During installation, apply grease to the mating surfaces of the wheel bearing and the driveshaft outboard joint (see step 1 on page 16-20).

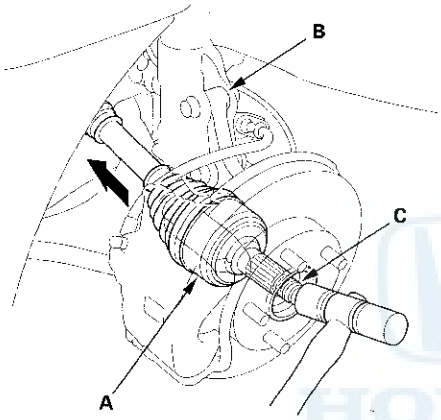

5. Remove the lock pin (A) from the lower ball joint, then remove the castle nut (B).

   NOTE: During installation, install a lock pin as shown after tightening the new castle nut.

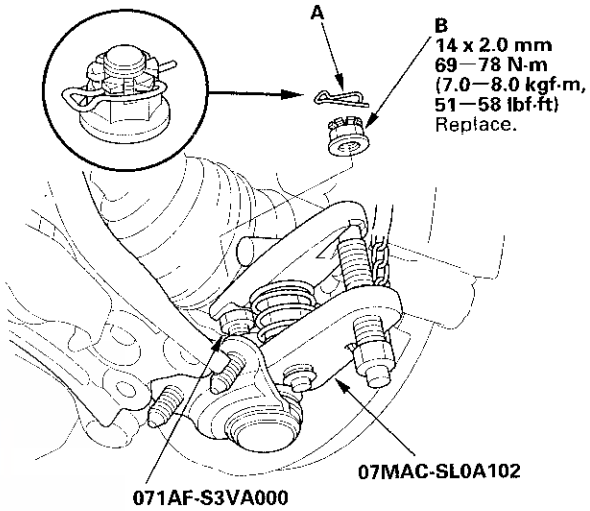

6. Disconnect the lower ball joint from the knuckle using the ball joint thread protector and the ball joint remover (see page 18-12), then remove the lower ball joint.

(cont'd)

Lower Ball Joint Replacement (cont'd)

7. Install the lower ball joint in the reverse order of removal, and note these items:

   - First install all of the components, and lightly tighten the bolts and the nuts, then raise the suspension to load it with the vehicle's weight before fully tightening to the specified torque values.
   - Be careful not to damage the ball joint boot when connecting the knuckle.
   - Before connecting the lower ball joint to the knuckle, degrease the threaded section and the tapered portion of the ball joint pin, the ball joint connecting hole, the threaded section, and the mating surfaces of the castle nuts.
   - Torque the castle nut to the lower torque specification, then tighten it only far enough to align the slot with the ball joint pin hole. Do not align the castle nut by loosening it.
   - Use a new spindle nut during reassembly.
   - Before installing the wheel, clean the mating surfaces on the brake disc and the inside of the wheel.

8. Check the wheel alignment, and adjust it if necessary (see page 18-6).

Lower Arm Removal/Installation

Special Tools Required
- Bushing driver 07AAF-SVAA100
- Receiver set 07AAF-SVAA200

Removal/Installation

1. Raise the front of the vehicle, and support it with safety stands in the proper locations (see page 1-10).

2. Remove the front wheels.

3. Remove the flange nut (A) while holding the joint pin (B) with a hex wrench (C), then disconnect both sides of the stabilizer link from the lower arm (D).

   NOTE: Use the new flange nut during reassembly.

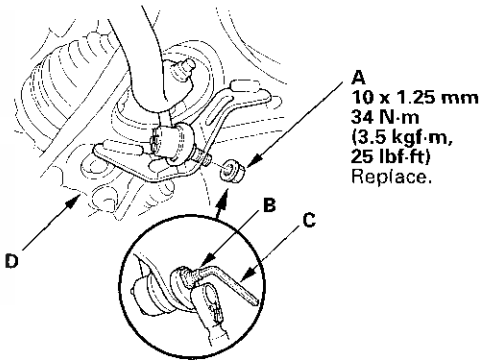

4. Turn the stabilizer bar backward to gain easier access to the front side of the lower arm mounting bolt.

5. Remove the flange bolt and the self-locking nuts from the lower arm (A).

   NOTE: During installation, install the new flange bolt and the new self-locking nuts. After lightly tightening all three fasteners, tighten them to the specified torque in the following order; the nut on the front (B), the nut on the rear (C), then the bolt (D).

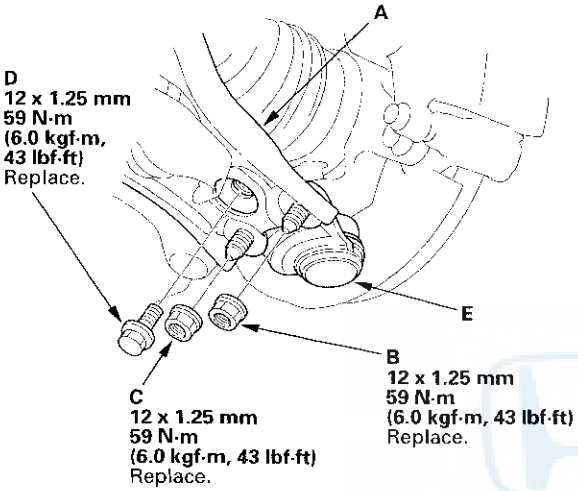

6. Disconnect the lower ball joint (E) from the lower arm.

7. Remove the front side of the lower arm mounting bolt (A).

   NOTE: Use the new mounting bolt during reassembly.

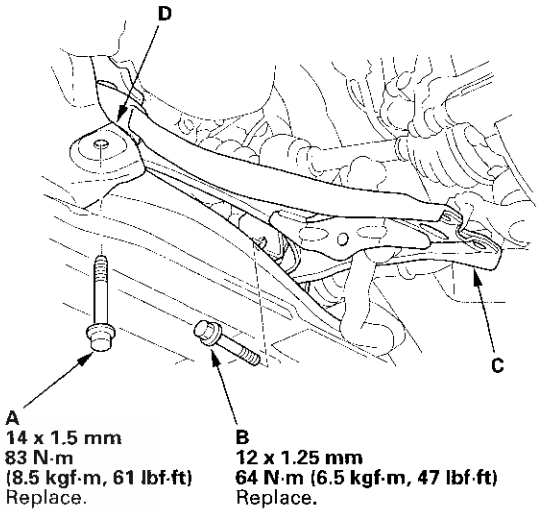

8. Remove the rear side of the lower arm mounting bolt (B), then remove the lower arm (C) from the front suspension subframe (D).

   NOTE: Use the new mounting bolt during reassembly.

9. Install the lower arm in the reverse order of removal, and note these items:

   - First install all of the components, and lightly tighten the bolts and the nuts, then raise the suspension to load it with the vehicle's weight before fully tightening to the specified torque values.
   - Before installing the wheel, clean the mating surfaces of the brake disc and the inside of the wheel.

10. Check the wheel alignment, and adjust it if necessary (see page 18-6).

(cont'd)

Lower Arm Removal/Installation (cont'd)

Bushing Replacement

NOTE: Replace the lower arm (A) as an assembly if the lower arm has the paint mark (B) around the hole near the front bushing. The paint mark can also be seen around a hole on the bottom side of the lower arm in the same area. Paint marks indicate a oversize bushing has been installed.

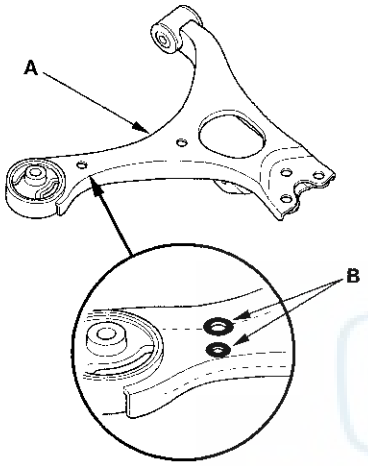

1. Press out the bushing (A) with the bushing driver, receiver set (attachment A), and a hydraulic press, and remove the bushing from the lower arm (B).

   NOTE: Be careful not to damage the inside of the bushing hole when pressing on the bushing.

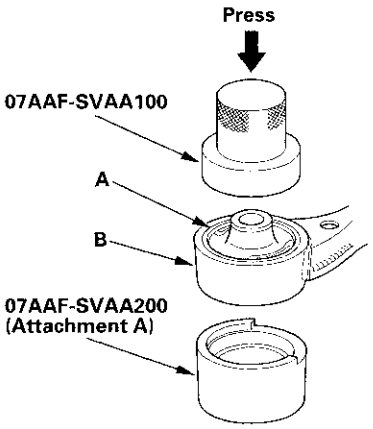

2. Clean the mating surfaces of the new bushing and the lower arm.

3. Position the tab (A) of the bushing (B) with the lower arm (C) as shown.

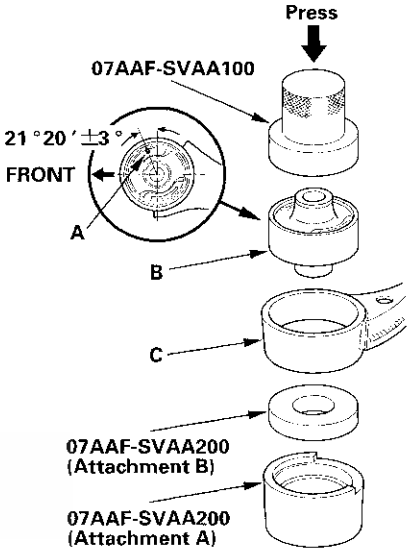

4. Using a hydraulic press, bushing driver, and receiver set (attachments A and B), press in the bushing into the lower arm.

5. Using a yellow oil-based paint marker, paint a mark (A) around the hole (B) near the front bushing (C). Also paint a mark around the hole on the bottom side of the lower arm in the same area.

   NOTE: These marks are used to identify a lower arm that has had the bushing replaced. Do not replace the bushing in a lower arm that has paint marks; you must replace the lower arm.

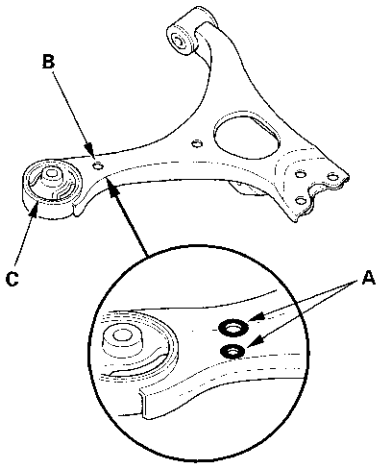

Stabilizer Link Removal/Installation

1. Raise the front of the vehicle, and support it with safety stands in the proper locations (see page 1-10).

2. Remove the front wheel.

3. Remove the self-locking nut (A) and the flange nut (B) while holding the respective joint pin (C) with a hex wrench (D), then remove the stabilizer link (E).

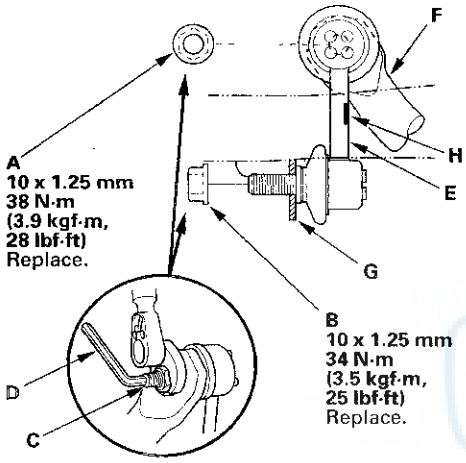

4. Install the stabilizer link on the stabilizer bar (F) and the lower arm (G) with the joint pins set at the center of their range of movement.

   NOTE: The stabilizer link has a paint mark (H). Align the paint mark on the stabilizer link facing rearward.

5. Install the new self-locking nut and the new flange nut, and tighten them to the specified torque values while holding the respective joint pin with a hex wrench.

6. Clean the mating surfaces of the brake disc and the inside of the wheel, then install the front wheel.

7. Test-drive the vehicle.

8. After 5 minutes of driving, torque the self-locking nut again to the specified torque value.

Stabilizer Bar Replacement

1. Raise the front of the vehicle, and support it with safety stands in the proper locations (see page 1-10).

2. Remove the front wheels.

3. Disconnect both stabilizer links from the stabilizer bar (see page 18-25).

4. Remove the flange bolts (A) and the bushing holders (B), then remove the bushings (C) and the stabilizer bar (D).

   NOTE: During installation, align the paint marks (E) on the stabilizer bar with the sides of the bushings.

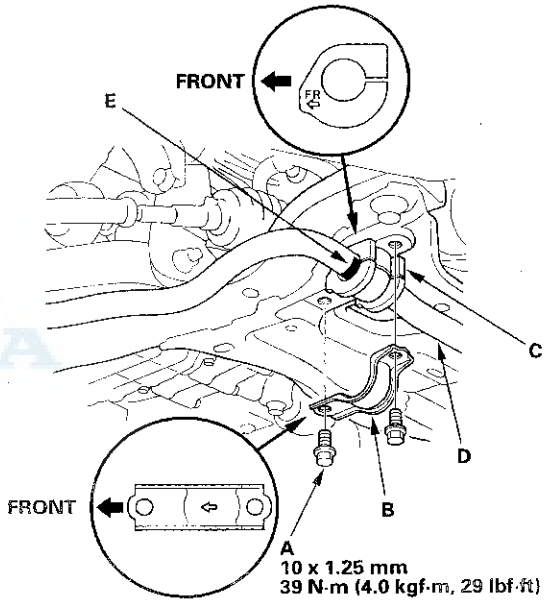

5. Install the stabilizer bar in the reverse order of removal, and note these items:

   - Note the right and left direction of the stabilizer bar.
   - Note the direction of installation for the bushings and the bushing holders.
   - Refer to stabilizer link removal/installation to connect the stabilizer bar to the links (see page 18-25).
   - Before installing the wheel, clean the mating surfaces of the brake disc and the inside of the wheels.

6. Check the wheel alignment, and adjust it if necessary (see page 18-6).

Damper/Spring Removal and Installation

Removal

1. Turn the ignition switch to ON (II), then turn on the windshield wipers. Turn the ignition switch to LOCK (0) when the wipers are near the A-pillars.

2. Raise the front of the vehicle, and support it with safety stands in the proper locations (see page 1-10).

3. Remove the front wheel.

4. Remove the wheel speed sensor harness clip (A) and the brake hose bracket (B) from the damper. Do not disconnect the wheel speed sensor connector.

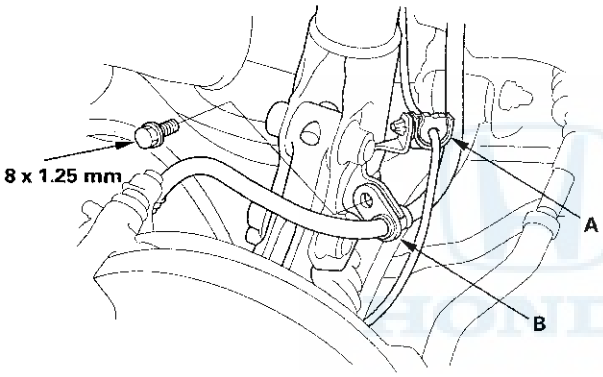

5. Remove the damper pinch bolts (A) and the self-locking nuts (B) from the damper.

   NOTE: Do not allow the knuckle to rotate too far outward. This may allow the driveshaft inboard joint to come apart.

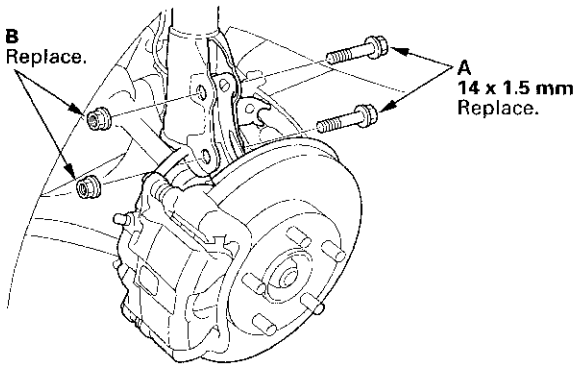

6. Remove the service cap (A) and the lid (B).

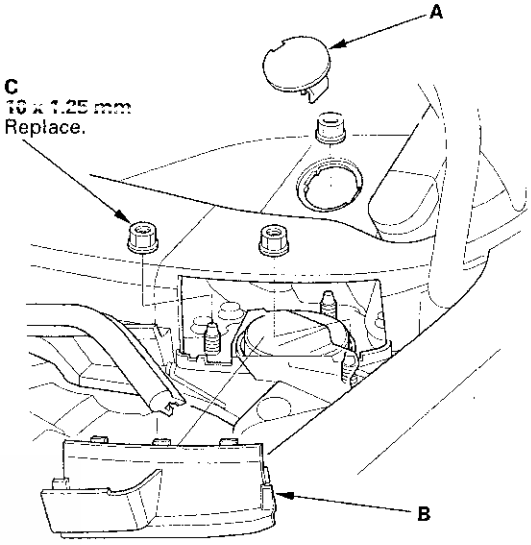

7. Remove the three flange nuts (C) from the top of the damper.

8. Remove the damper/spring (A).

   NOTE:
   - The left and right damper springs are different. Mark the springs L and R before you continue.
   - Be careful not to damage the body.

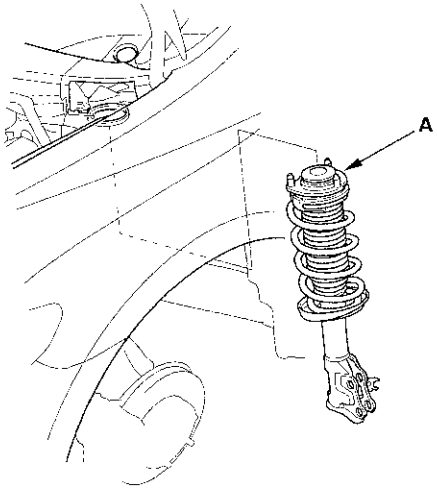

Installation

1. Install the damper/spring (A) onto the frame. Note the direction of the damper mounting base as shown.

   NOTE: Be careful not to damage the body.

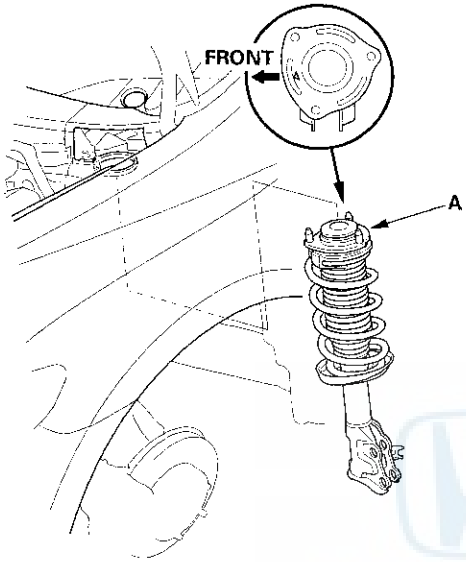

2. Loosely install the new flange nuts (A).

   NOTE: Install the service cap (B) and the lid (C) after tightening the flange nuts to the specified torque value.

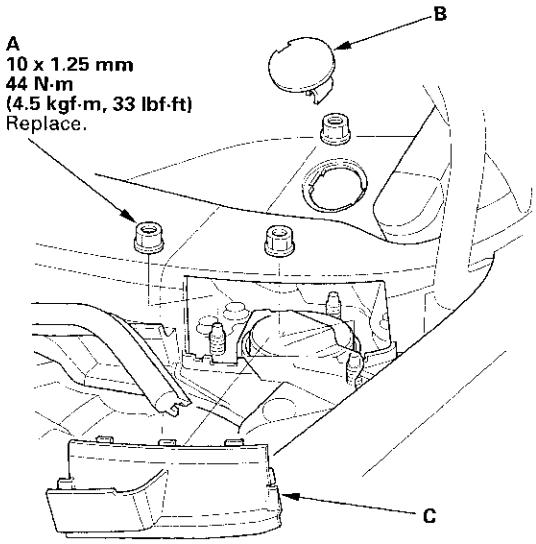

3. Loosely install the new damper pinch bolts (A) and the new self-locking nuts (B) to the damper (C).

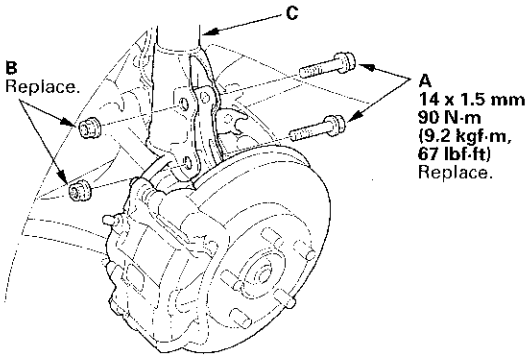

4. Raise the front suspension with a floor jack to load the suspension with the vehicle's weight.

5. Tighten the flange nuts on top of the damper to the specified torque value.

6. Tighten the damper pinch bolts to the specified torque value.

7. Install the wheel speed sensor harness clip (A) and the brake hose bracket (B) to the damper (C).

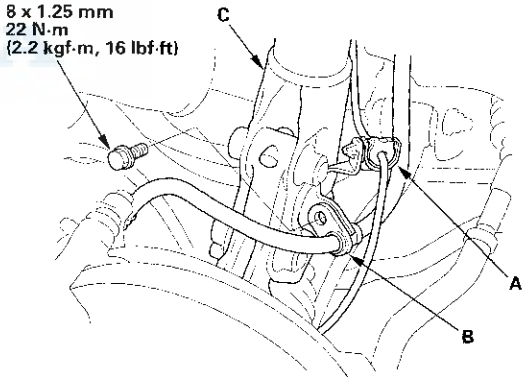

8. Install the service cap and the lid.

9. Clean the mating surfaces of the brake disc and the inside of the wheel, then install the front wheel.

10. Check the wheel alignment, and adjust it if necessary (see page 18-6).

11. Turn the ignition switch to ON (II), then turn the wipers to the park positions, and turn the ignition switch to LOCK (0).

Damper/Spring Disassembly, Inspection, and Reassembly

Exploded View

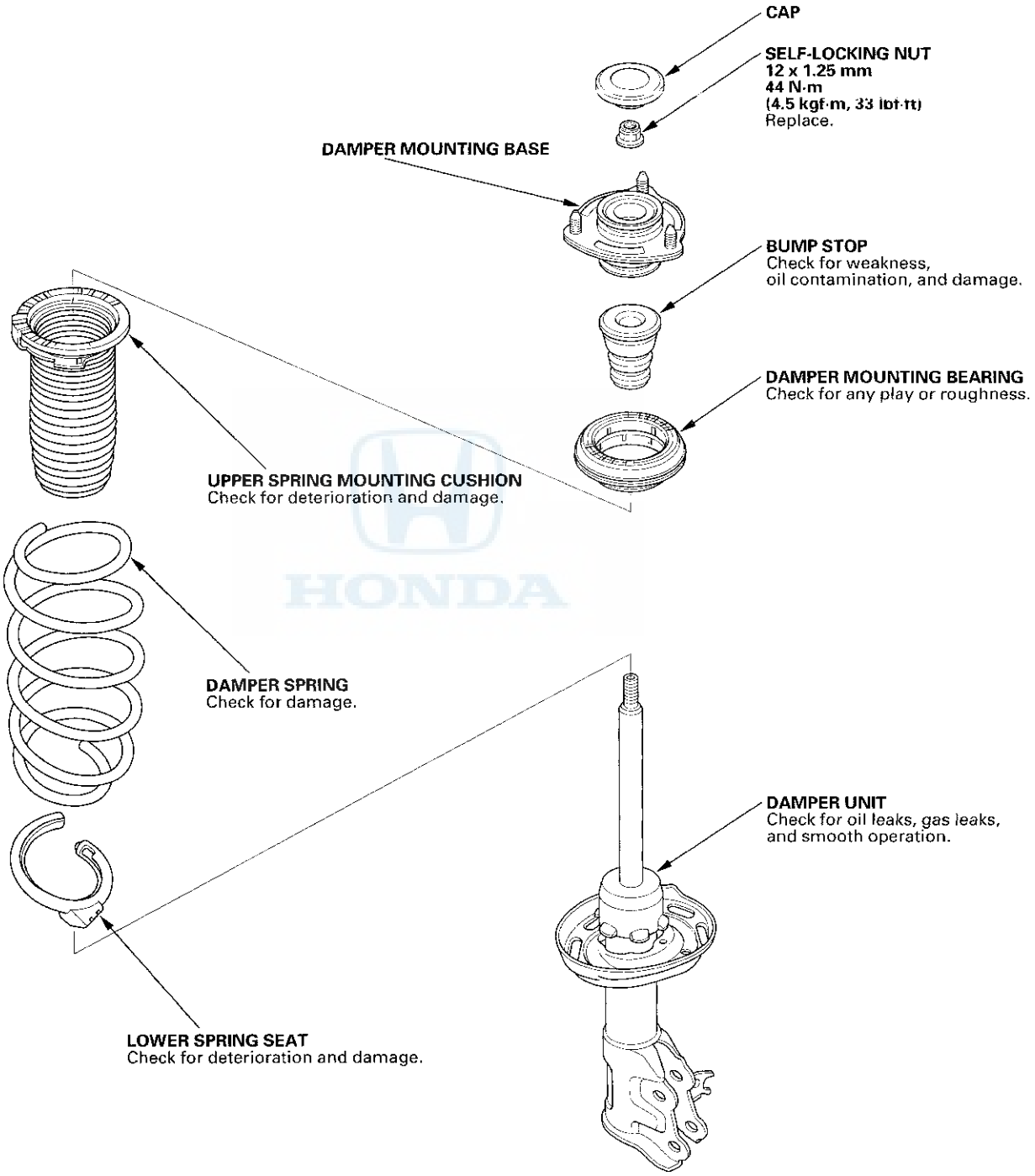

Special Tools Required
Strut nut adapter 07AAA-SVAA100

NOTE: When compressing the damper spring, use a commercially available strut spring compressor (Branick MST-580A or Model 7200, or equivalent) according to the manufacturer's instructions.

Disassembly

1. Remove the cap (A) from the top of the damper.

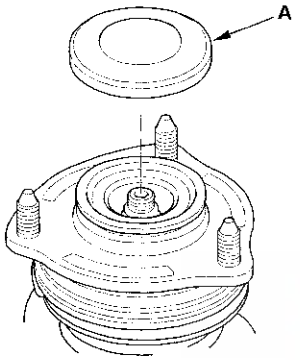

2. Compress the damper spring, then remove the self-locking nut (A) using the strut nut adapter (B) while holding the damper shaft with a hex wrench (C). Do not compress the spring more than necessary to remove the nut.

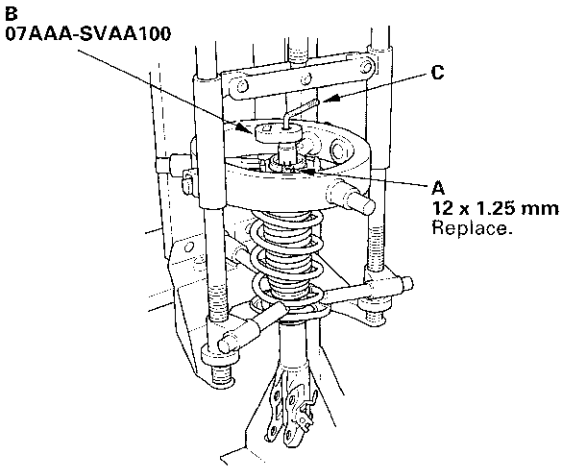

3. Release the pressure from the strut spring compressor, then disassemble the damper as shown in the Exploded View.

Inspection

1. Reassemble the damper mounting base and the self-locking nut.

2. Compress the damper assembly by hand, and check for smooth operation through a full stroke, both compression and extension. The damper should extend smoothly and constantly when compression is released. If it does not, the gas is leaking and the damper should be replaced.

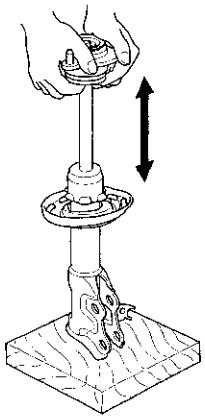

3. Check for oil leaks, abnormal noises, or binding during these tests.

(cont'd)

Damper/Spring Disassembly, Inspection, and Reassembly (cont'd)

Reassembly

1. Install the damper spring (A) on the upper spring mounting cushion (B) by aligning the upper end (C) of the damper spring with the ledge portion (D) of the upper spring mounting cushion.

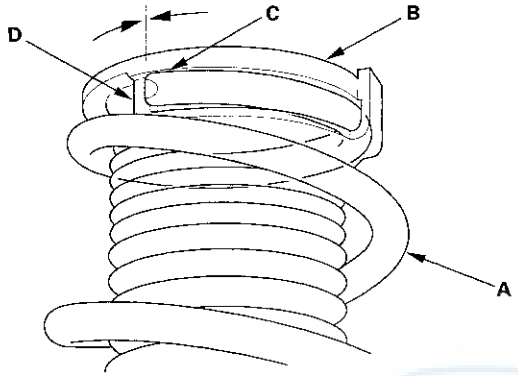

2. Compress the damper spring.

3. Install all the parts except the self-locking nut and the cap onto the damper unit (A) by referring to the Exploded View.

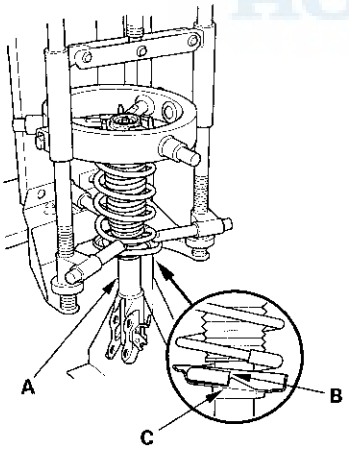

4. Align the bottom of the spring (B) and the stepped part of the lower spring seat (C) on the damper unit.

5. Align the damper bracket (A) and the damper mounting base (B) so that the "△" stamp (C) points toward the front.

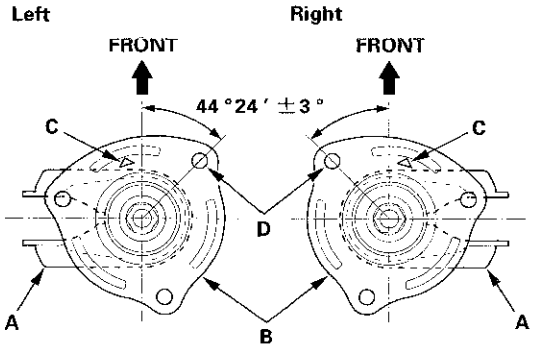

6. Align the angle of the strut bolt (D) on the damper bracket as shown.

7. Install the new self-locking nut (A).

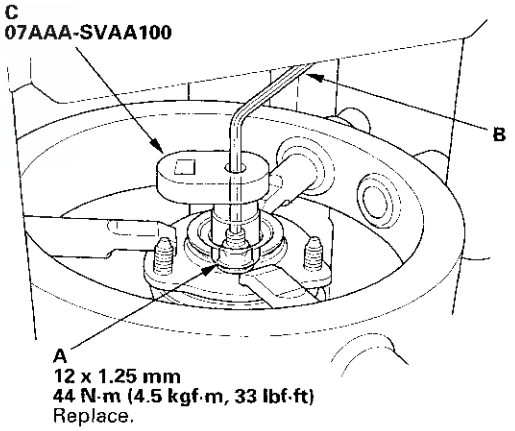

8. Hold the damper shaft using a hex wrench (B), and tighten the self-locking nut using the strut nut adapter (C) to the specified torque value.

9. Remove the damper/spring from the strut spring compressor.

10. Install the cap.

Knuckle/Hub Bearing Unit Replacement

Exploded View - Disc Brake Type

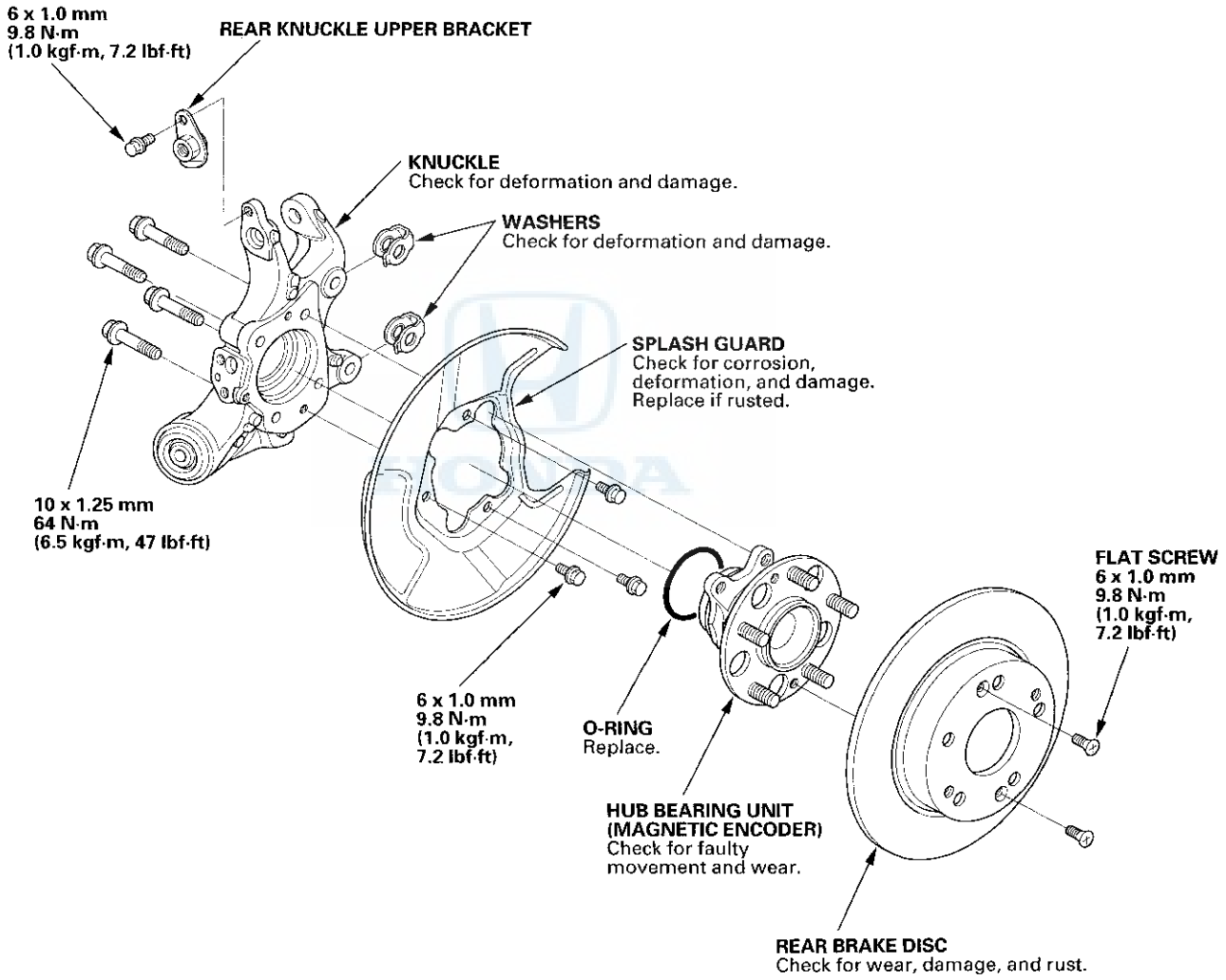

(cont'd)

Knuckle/Hub Bearing Unit Replacement (cont'd)

Exploded View - Drum Brake Type

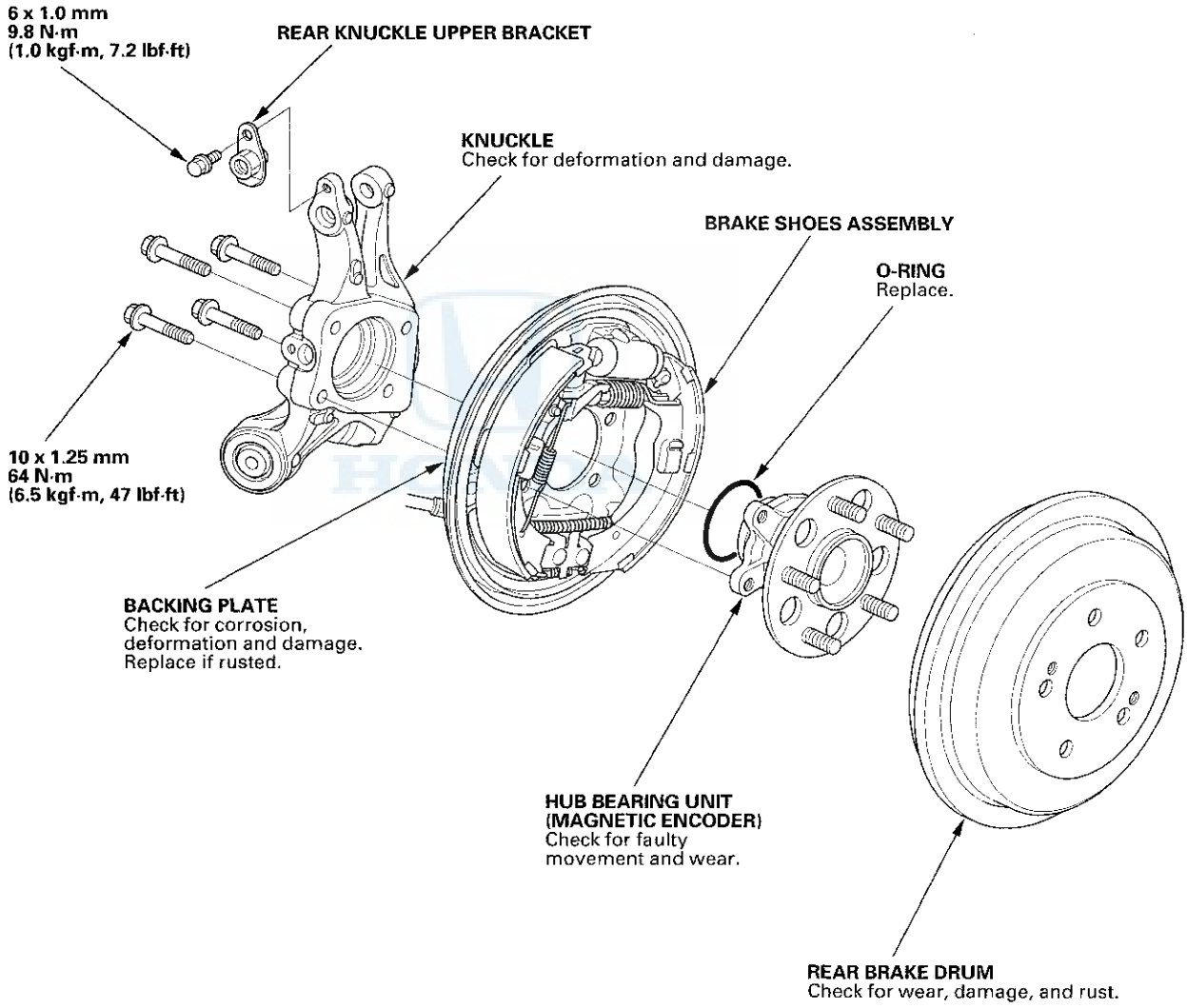

Hub Bearing Unit Replacement - Disc Brake Type

1. Raise the rear of the vehicle, and support it with safety stands in the proper locations (see page 1-10).

2. Remove the center cap (A), the wheel nuts (B), and the rear wheel.

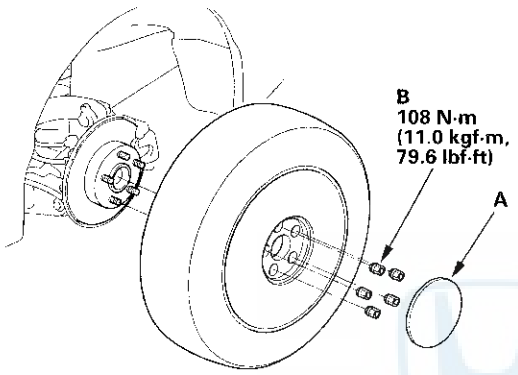

3. Remove the brake hose mounting bolt (A) from the bracket.

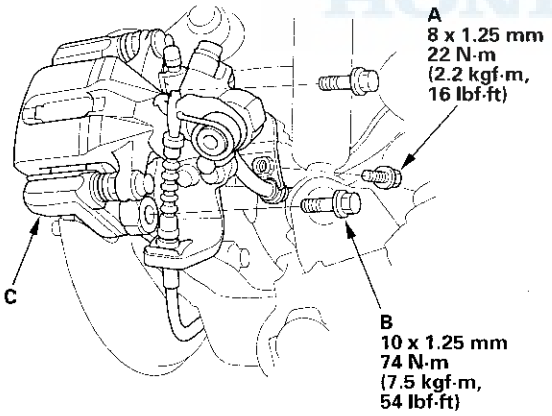

4. Remove the brake caliper bracket mounting bolts (B), then remove the caliper assembly (C) from the knuckle. To prevent damage to the caliper assembly or the brake hose, use a short piece of wire to hang the caliper assembly from the undercarriage. Do not twist the brake hose excessively.

5. Remove the two washers (A).

   NOTE: During installation, make sure the washers are installed between the brake caliper bracket and the knuckle.

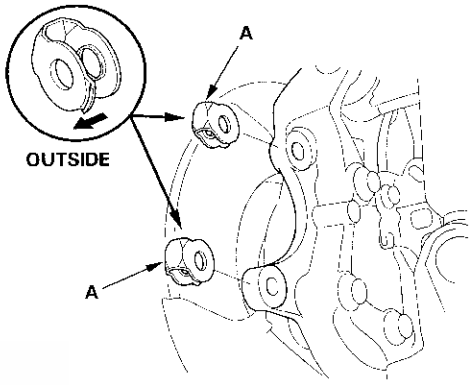

6. Remove the rear brake disc (see page 19-25).

7. Remove the hub bearing unit (A) and the O-ring (B).

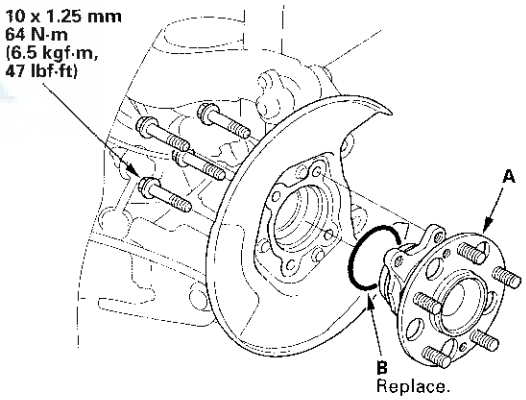

8. Check the hub bearing unit for damage and cracks.

9. Install the hub bearing unit in the reverse order of removal, and note these items:

   - Use a new O-ring on reassembly.
   - Before installing the brake disc, clean the mating surfaces of the hub bearing unit and the inside of the brake disc.
   - Before installing the wheel, clean the mating surfaces of the brake disc and the inside of the wheel.

10. Check the wheel alignment, and adjust it if necessary (see page 18-6).

(cont'd)

Knuckle/Hub Bearing Unit Replacement (cont'd)

Hub Bearing Unit Replacement - Drum Brake Type

1. Raise the rear of the vehicle, and support it with safety stands in the proper locations (see page 1-10).

2. Remove the center cap (A), the wheel nuts (B), and the rear wheel.

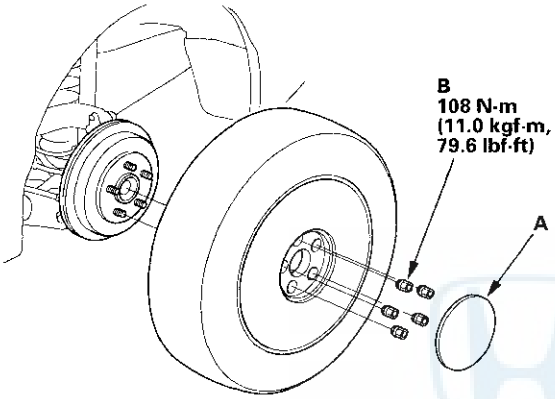

3. Release the parking brake, and remove the rear brake drum (see page 19-29).

4. Remove the hub bearing unit (A) and the O-ring (B).

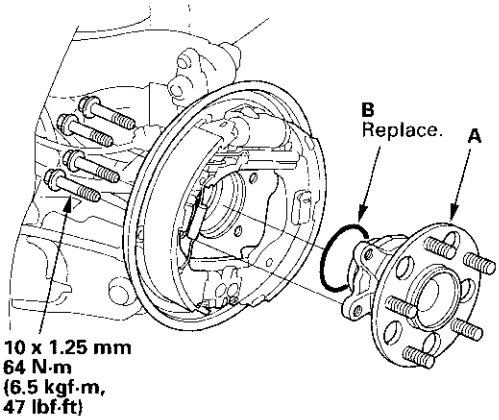

5. Check the hub bearing unit for damage and cracks.

6. Install the hub bearing unit in the reverse order of removal, and note these items:

   - Use a new O-ring on reassembly.
   - Before installing the brake drum, clean the mating surfaces of the hub bearing unit and the inside of the brake drum.
   - Before installing the wheel, clean the mating surfaces of the brake drum and the inside of the wheel.

7. Check the wheel alignment, and adjust it if necessary (see page 18-6).

Knuckle Replacement - Disc Brake Type

1. Remove the hub bearing unit.

2. Remove the splash guard (A).

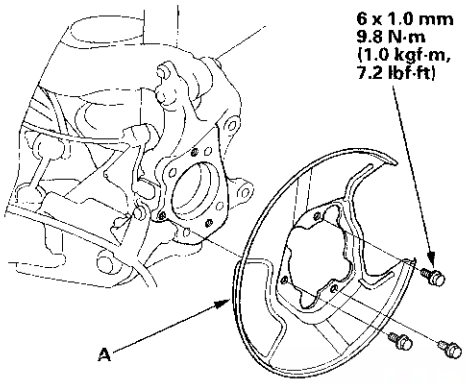

3. Remove the wheel speed sensor (A), and the brake hose mounting bracket (B) from the knuckle (C). Do not disconnect the wheel speed sensor connector.

   NOTE:
   - Apply multipurpose grease to the mating surfaces on the knuckle and the O-ring during reassembly.
   - To prevent O-ring damage, the wheel speed sensor must be installed with the guide pin tool during reassembly (see step 5 on page 19-158).

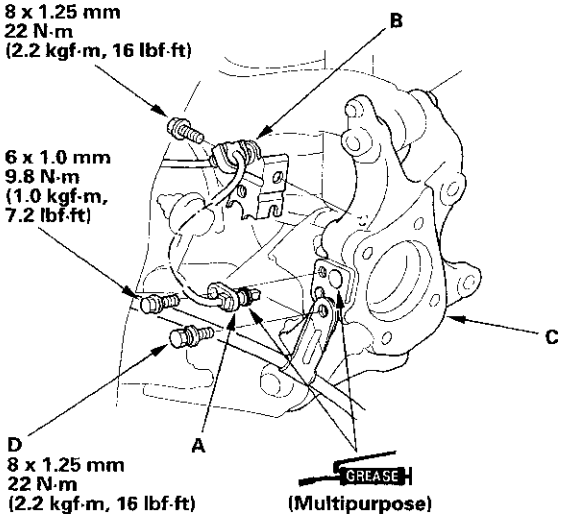

4. Remove the parking brake cable mounting bolt (D) from the knuckle.

5. Place a floor jack under the trailing arm to support it.

   NOTE: Do not place the jack against the plate section of the lower arm. Be careful not to damage any suspension components.

6. Remove the upper arm mounting bolt (A), and disconnect the upper arm (B) from the knuckle.

   NOTE: Use the new upper arm mounting bolt during reassembly.

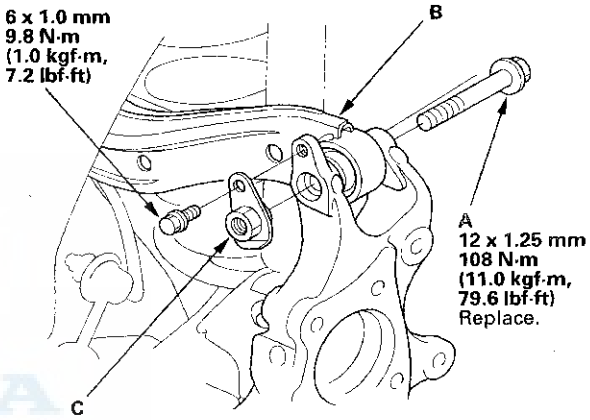

7. Remove the rear knuckle upper bracket (C).

(cont'd)

Knuckle/Hub Bearing Unit Replacement (cont'd)

8. Mark the cam positions of the adjusting bolt (A) and the adjusting cam plate (B) with the frame, then remove the self-locking nut (C), the adjusting cam plate, and the adjusting bolt. Discard the self-locking nut.

   NOTE: Use a new self-locking nut and a new adjusting bolt during reassembly.

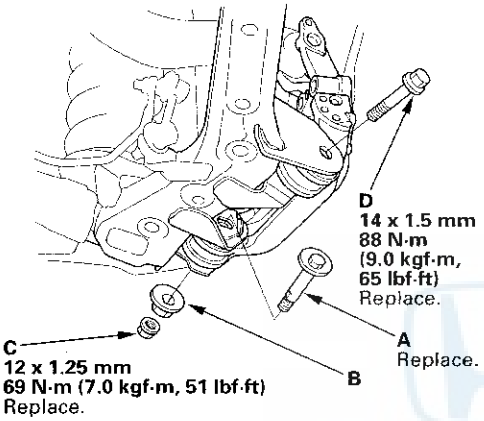

9. Remove the flange bolt (D), and remove the knuckle.

   NOTE: Use the new flange bolt during reassembly.

10. Install the knuckle in the reverse order of removal, and note these items:

    - First install all of the components, and lightly tighten the bolts and the nuts, then raise the suspension to load it with the vehicle's weight before fully tightening to the specified torque values.
    - Align the cam positions of the adjusting bolt and the adjusting cam plate with the marked positions when tightening the self-locking nut.
    - Before installing the wheel, clean the mating surfaces of the brake disc and the inside of the wheel.

11. Check the wheel alignment, and adjust it if necessary (see page 18-6).

Knuckle Replacement - Drum Brake Type

1. Remove the hub bearing unit.

2. Disconnect the brake line (A) from the wheel cylinder (B). Remove the backing plate (C) with brake shoes assembly from the knuckle.

   NOTE:
   - Do not spill brake fluid on the vehicle; it may damage the paint; if brake fluid gets on the paint, wash it off immediately with water.
   - Plug the end of the joint to prevent spilling brake fluid.

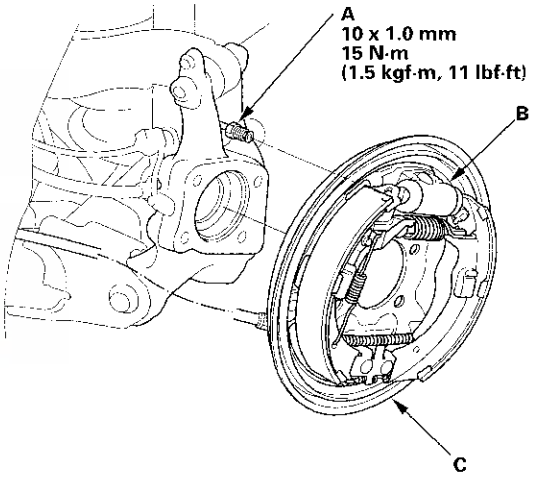

3. Remove the wheel speed sensor (A), and the brake hose mounting bracket (B) from the knuckle (C). Do not disconnect the wheel speed sensor connector.

   NOTE:
   - Apply multipurpose grease to the mating surfaces on the knuckle and the O-ring during reassembly.
   - To prevent O-ring damage, the wheel speed sensor must be installed with the guide pin tool during reassembly (see step 5 on page 19-240).

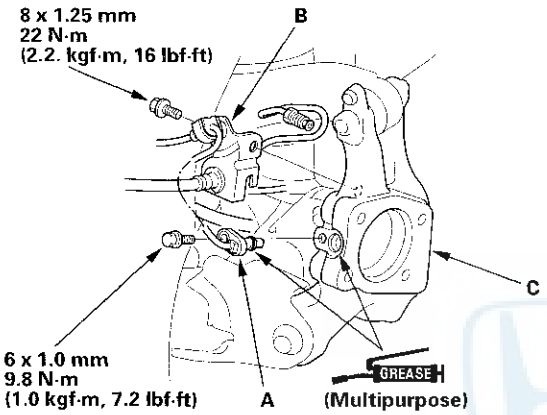

4. Place a floor jack under the trailing arm to support it.

   NOTE: Do not place the jack against the plate section of the lower arm. Be careful not to damage any suspension components.

5. Remove the upper arm mounting bolt (A), and disconnect the upper arm (B) from the knuckle.

   NOTE: Use the new upper arm mounting bolt during reassembly.

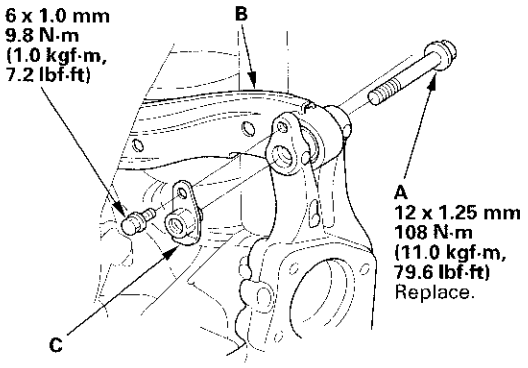

6. Remove the rear knuckle upper bracket (C).

7. Mark the cam positions of the adjusting bolt (A) and the adjusting cam plate (B) with the frame, then remove the self-locking nut (C), the adjusting cam plate, and the adjusting bolt. Discard the self-locking nut.

   NOTE: Use a new self-locking nut and a new adjusting bolt during reassembly.

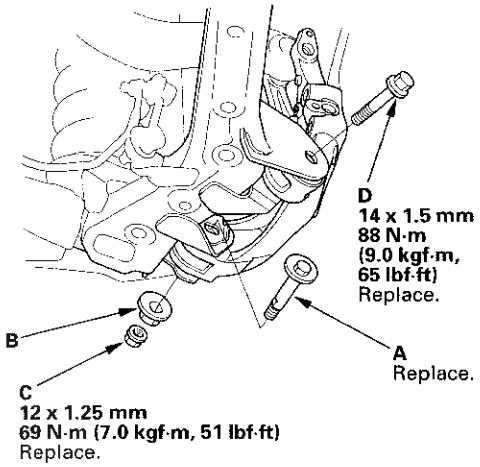

8. Remove the flange bolt (D), and remove the knuckle.

   NOTE: Use the new flange bolt during reassembly.

9. Install the knuckle in the reverse order of removal, and note these items:

   - First install all of the components, and lightly tighten the bolts and the nuts, then raise the suspension to load it with the vehicle's weight before fully tightening to the specified torque values.
   - Align the cam positions of the adjusting bolt and the adjusting cam plate with the marked positions when tightening the self-locking nut.
   - Fill the master cylinder reservoir to the MAX (upper) level line, and bleed the normal brake system (except the servo unit and power unit) (see page 19-97). Check for a leak at the brake hose/line joint, and retighten it if necessary.
   - Before installing the wheel, clean the mating surfaces of the brake drum and the inside of the wheel.

10. Check the wheel alignment, and adjust it if necessary (see page 18-6).

Upper Arm Removal/Installation

NOTE: There are two types of rear upper arms: those that are marked with "C" (A), and those with no marks. Be sure to use the correct alignment specifications.

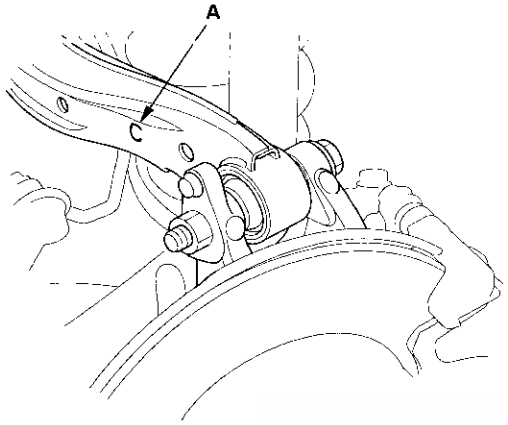

1. Raise the rear of the vehicle, and support it with safety stands in the proper locations (see page 1-10).

2. Remove the rear wheel.

3. Position a floor jack at the connecting point of the trailing arm (A) and the knuckle (B). Raise the floor jack until the suspension begins to compress.

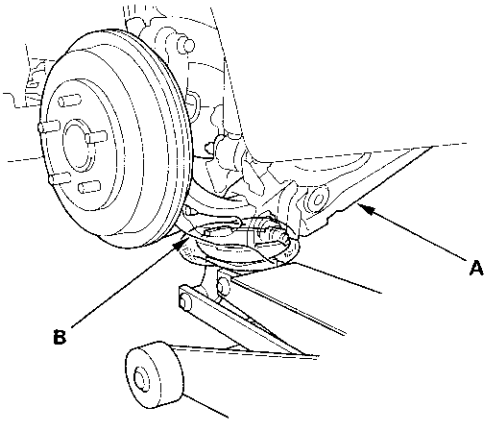

4. Remove the flange bolts (A) from the vehicle.

   NOTE: Use new flange bolts during reassembly.

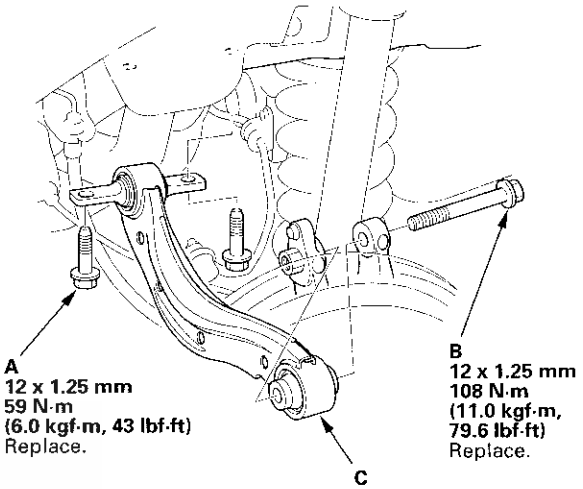

5. Remove the flange bolt (B) from the knuckle, and remove the upper arm (C).

   NOTE: Use the new flange bolt during reassembly.

6. Install the upper arm in the reverse order of removal, and note these items:

   - First install all of the components, and lightly tighten the bolts, then raise the suspension to load it with the vehicle's weight before fully tightening to the specified torque values.
   - Before installing the wheel, clean the mating surfaces of the brake disc or the brake drum and the inside of the wheel.

7. Check the wheel alignment, and adjust it if necessary (see page 18-6).

Trailing Arm Removal/Installation

1. Raise the rear of the vehicle, and support it with safety stands in the proper locations (see page 1-10).

2. Remove the rear wheel.

3. Remove the rear floor undercover (see page 20-151).

4. Remove the parking brake cable mounting bolt (A) from the trailing arm (B).

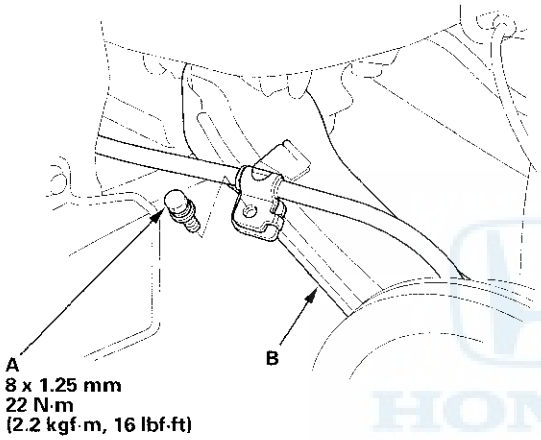

5. Position a floor jack at the connecting point of the trailing arm (A) and the knuckle (B). Raise the floor jack until the suspension begins to compress.

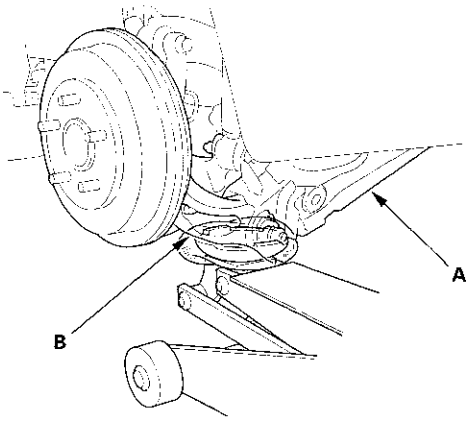

6. Remove the knuckle with the hub bearing unit: Disc brake type (see page 18-33), drum brake type (see page 18-34).

7. Disconnect the stabilizer link from the trailing arm (see page 18-40).

8. Remove the rear spring (see page 18-46).

9. Remove the trailing arm rear mounting bolt (A).

   NOTE: Use the new mounting bolt during reassembly.

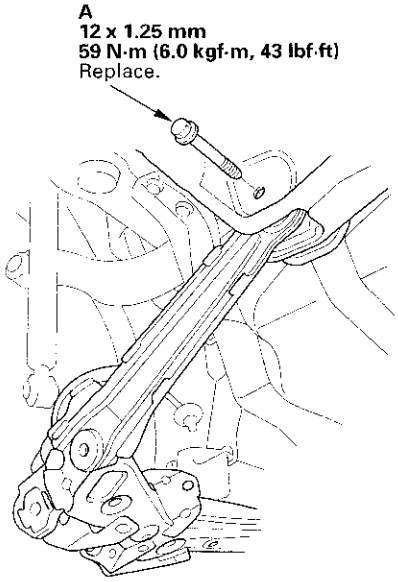

10. Lower the jack and remove the trailing arm.

(cont'd)

Trailing Arm Removal/Installation (cont'd)

11. Install the trailing arm in the reverse order of removal, and note these items:

    - First install all of the components and lightly tighten the bolts, then raise the suspension to load it with the vehicle's weight before fully tightening to the specified torque values.
    - Check the brake hose for interference and twisting.
    - Before installing the wheel, clean the mating surfaces of the brake disc or the brake drum and the inside of the wheel.

12. Check the wheel alignment, and adjust it if necessary (see page 18-6).

Stabilizer Link Removal/Installation

1. Raise the rear of the vehicle, and support it with safety stands in the proper locations (see page 1-10).

2. Remove the rear wheel.

3. Remove the self-locking nut (A) and the flange nut (B) while holding the respective joint pin (C) with a hex wrench (D), then remove the stabilizer link (E).

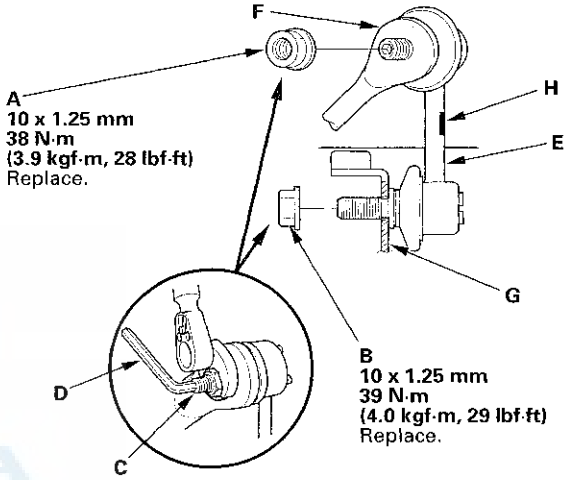

4. Install the stabilizer link on the stabilizer bar (F) and the trailing arm (G) with the joint pins set at the center of their range of movement.

   NOTE: The stabilizer link has a paint mark (H). Align the paint mark on the stabilizer link facing rearward.

5. Install the new self-locking nut and the new flange nut, and tighten them to the specified torque values while holding the respective joint pin with a hex wrench.

6. Clean the mating surfaces of the brake disc or the brake drum and the inside of the wheel, then install the rear wheel.

7. Test-drive the vehicle.

8. After 5 minutes of driving, torque the self-locking nut again to the specified torque value.

Stabilizer Bar Replacement

1. Raise the rear of the vehicle, and support it with safety stands in the proper locations (see page 1-10).

2. Remove the rear wheels.

3. Disconnect both stabilizer links from the stabilizer bar (see page 18-40).

4. Remove the flange bolts (A) and the bushing holders (B), then remove the bushings (C) and the stabilizer bar (D).

   NOTE: During installation, align the paint marks (E) on the stabilizer bar with the sides of the bushings.

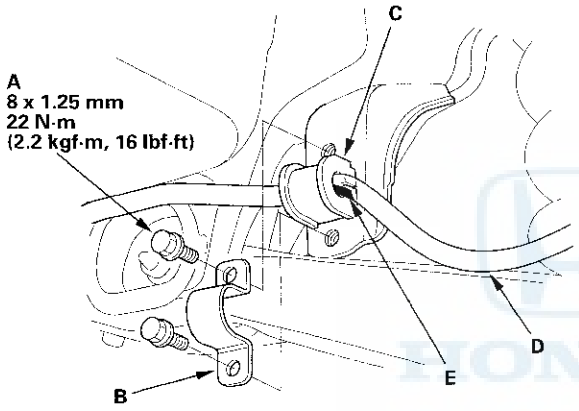

5. Replace the stabilizer bar bracket (A) if necessary.

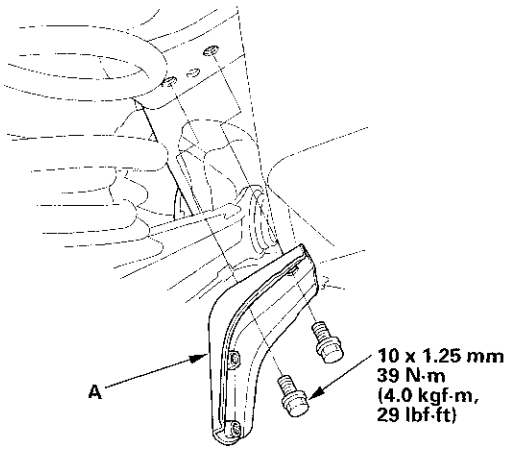

6. Install the stabilizer bar in the reverse order of removal, and note these items:

   - Note the right and left direction of the stabilizer bar.
   - Refer to stabilizer link removal/installation to connect the stabilizer bar to the links (see page 18-40).
   - Before installing the wheel, clean the mating surfaces of the brake disc or the brake drum and the inside of the wheel.

7. Check the wheel alignment, and adjust it if necessary (see page 18-6).

Damper Replacement

Exploded View

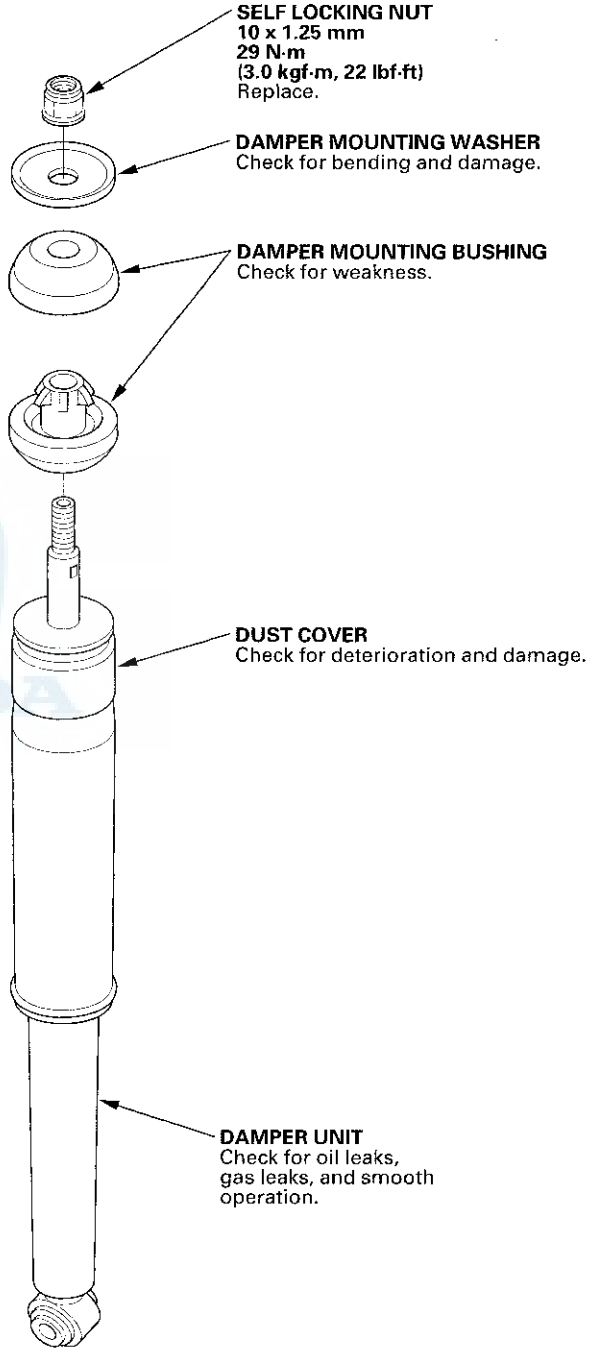

Removal

1. Raise the rear of the vehicle, and support it with safety stands in the proper locations (see page 1-10).

2. Remove the rear wheel.

3. Position a floor jack at the connecting point of the trailing arm (A) and the knuckle (B). Raise the floor jack until the suspension begins to compress.

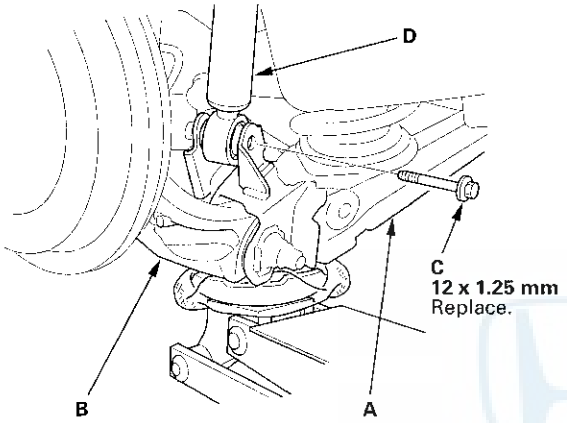

4. Remove the flange bolt (C) that connects the trailing arm and the damper (D).

5. Remove the trunk side trim panel (see page 20-68).

6. Remove the self-locking nut (A) while holding the damper shaft (B) with a hex wrench (C).

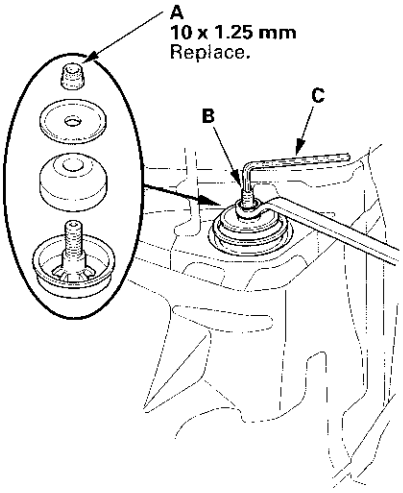

7. Compress the damper unit (A) by hand, and remove it from the vehicle.

   NOTE: Be careful not to damage the body.

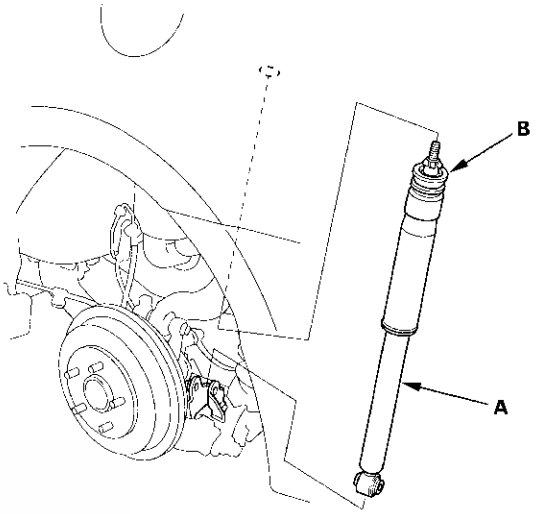

8. Remove the damper mounting bushing (B).

(cont'd)

Damper Replacement (cont'd)

Inspection

1. Push on the damper as shown.

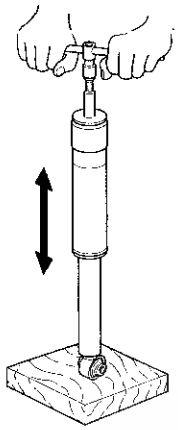

2. Compress the damper assembly by hand, and check for smooth operation through a full stroke, both compression and extension. The damper should extend smoothly and constantly when compression is released. If it does not, the gas is leaking and the damper should be replaced.

3. Check for oil leaks, abnormal noises, and binding during these tests.

Installation

1. Install the damper mounting bushing (A) onto the damper unit. Position the damper assembly (B) between the body and trailing arm.

   NOTE: Be careful not to damage the body.

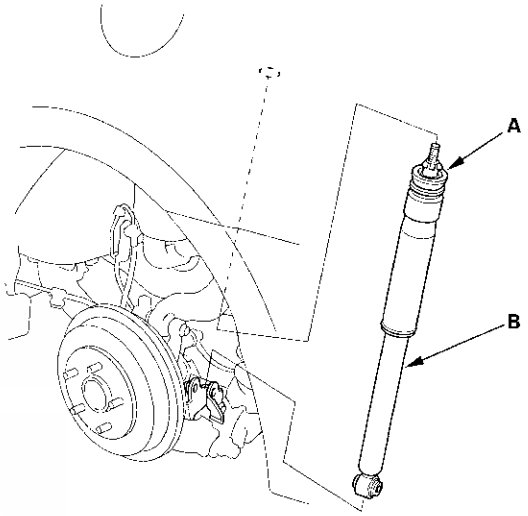

2. Position a floor jack under the trailing arm to support the suspension, then install the new damper mounting bolt (A).

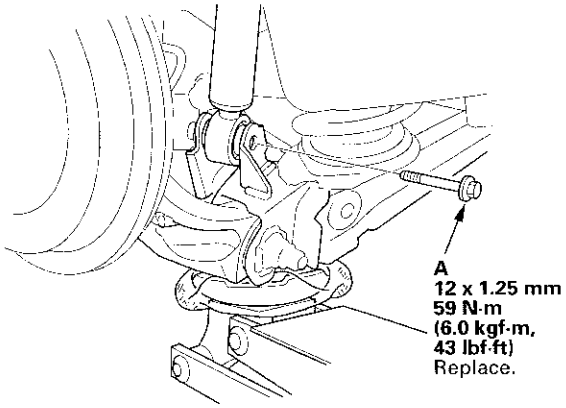

3. Loosely tighten the damper mounting bolt.

4. Raise the rear suspension with the jack until the vehicle just lifts off of the safety stands, then tighten the damper mounting bolt to the specified torque value.

5. Install the damper mounting bushing (A), the damper mounting washer (B), and the new self-locking nut (C) on the damper shaft.

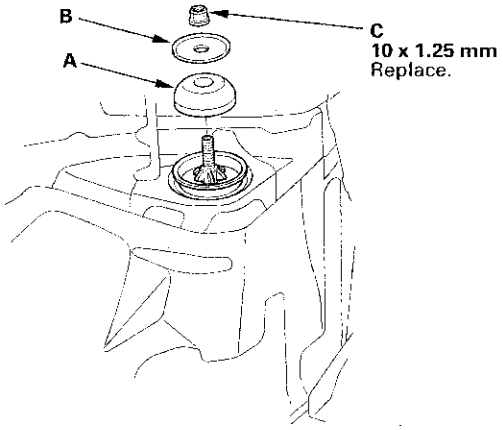

6. Tighten the self-locking nut (A) to the specified torque value while holding the damper shaft (B) with a hex wrench (C).

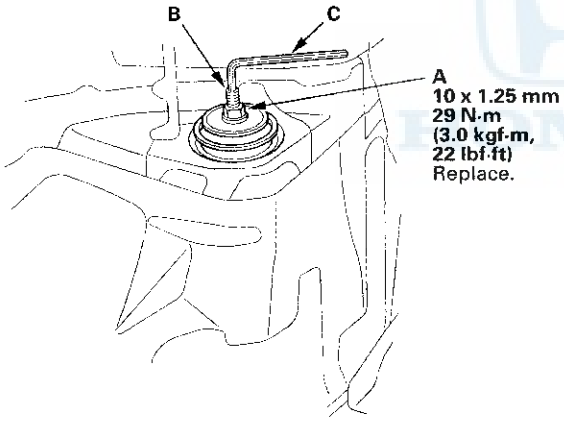

7. Install the trunk side trim panel (see page 20-68).

8. Clean the mating surfaces of the brake disc or the brake drum and the inside of the wheel, then install the rear wheel.

9. Check the wheel alignment, and adjust it if necessary (see page 18-6).

Spring Replacement

Exploded View

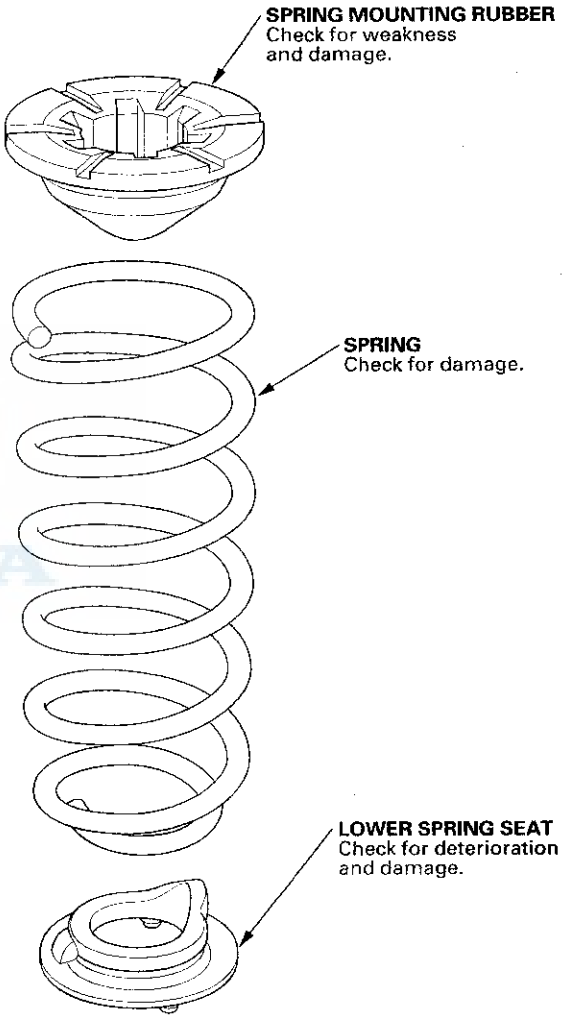

(cont'd)

Spring Replacement (cont'd)

Removal

1. Raise the rear of the vehicle, and support it with safety stands in the proper locations (see page 1-10).

2. Remove the rear wheel.

3. Remove the wheel speed sensor (A) from the knuckle (B). Do not disconnect the wheel speed sensor connector .

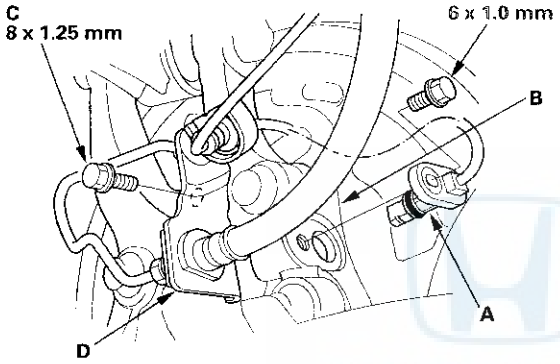

4. Remove the brake hose mounting bolt (C) from the bracket (D).

5. Position a floor jack at the connecting point of the trailing arm (A) and the knuckle (B). Raise the floor jack until the suspension begins to compress.

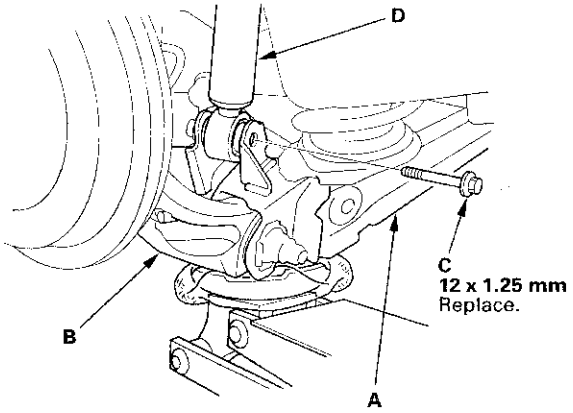

6. Remove the flange bolt (C) that connects the trailing arm and the damper (D).

7. Disconnect the stabilizer link from the trailing arm (see page 18-40).

8. Remove the flange bolt (A) that connects the knuckle (B) and the upper arm (C).

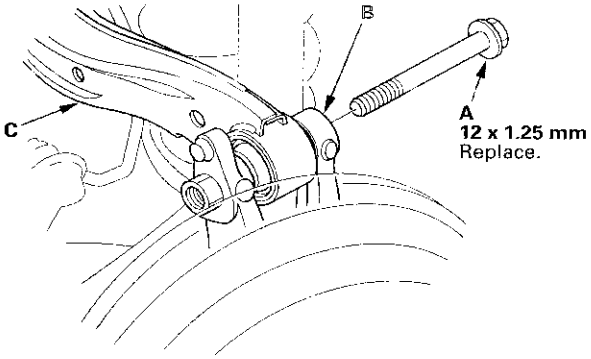

9. Remove the trailing arm front mounting bolts (A).

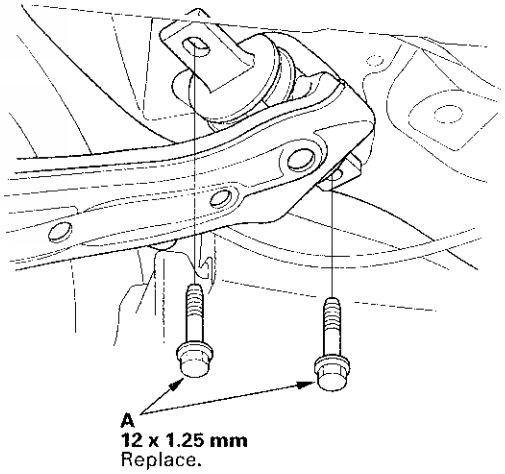

10. Lower the floor jack gradually.

11. Remove the spring mounting rubber (A), the spring (B) and the lower spring seat (C).

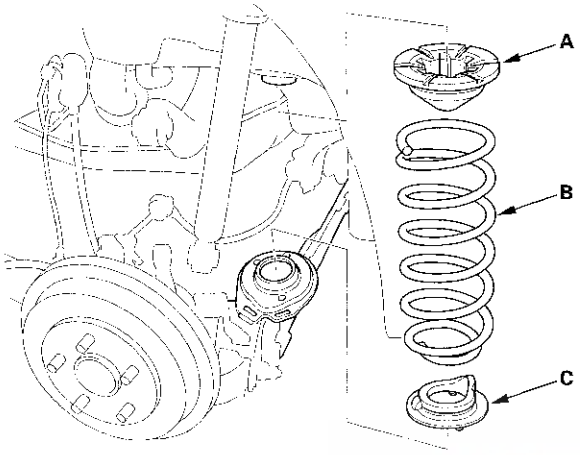

Installation

1. Install the spring mounting rubber (A), the spring (B) and the lower spring seat (C).

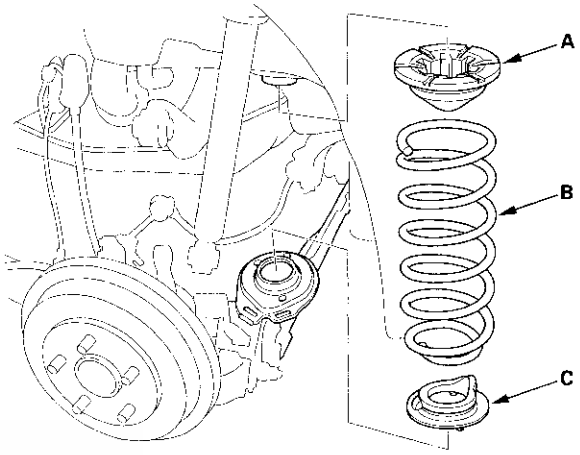

2. Align the bottom of the spring (A) and the lower spring seat (B) with the trailing arm (C) as shown.

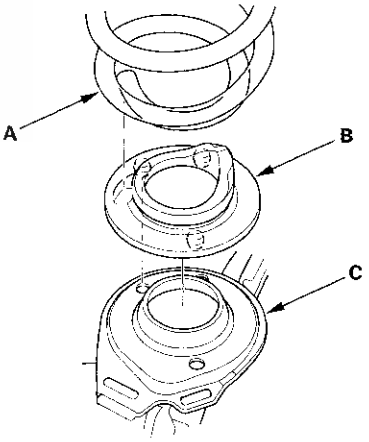

(cont'd)

Spring Replacement (cont'd)

3. Loosely install the new trailing arm front mounting bolts (A).

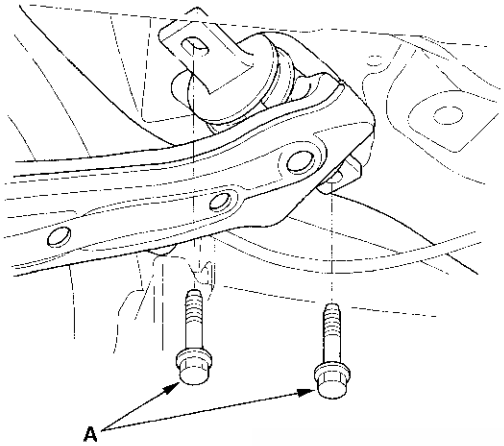

A
'06 model:
12 x 1.25 mm
108 N·m (11.0 kgf·m, 79.6 lbf·ft)
Replace.
'07-09 models:
12 x 1.25 mm
110 N·m (11.2 kgf·m, 81.0 lbf·ft)
Replace.

4. Loosely install the new flange bolt (A) that connects the knuckle (B) and the upper arm (C).

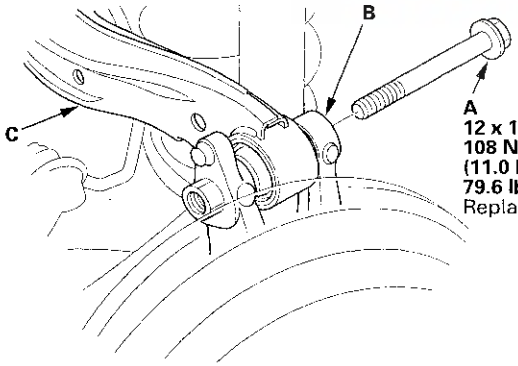

A
12 x 1.25 mm
108 N·m
(11.0 kgf·m,
79.6 lbf·ft)
Replace.

5. Slowly raise the jack until you can align the bolt hole with the holes in the trailing arm (A) and the damper (B), and install the new flange bolt (C).

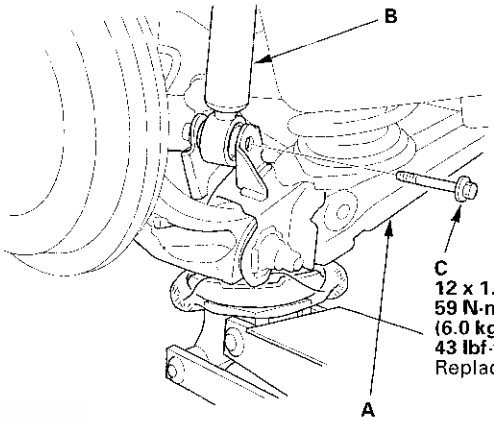

C
12 x 1.25 mm
59 N·m
(6.0 kgf·m,
43 lbf·ft)
Replace.

6. Install the stabilizer link on the trailing arm (see page 18-40).

7. Raise the rear suspension with a floor jack to load the vehicle weight.

8. Tighten all mounting hardware to the specified torque values.

9. Install the wheel speed sensor (A) and the brake hose mounting bracket (B) to the knuckle (C).

   NOTE:
   - Apply multipurpose grease to the mating surfaces on the knuckle and the O-ring during reassembly.
   - To prevent O-ring damage, the wheel speed sensor must be installed with the guide pin tool: rear disc brake type (see step 5 on page 19-158), rear drum brake type (see step 5 on page 19-240).

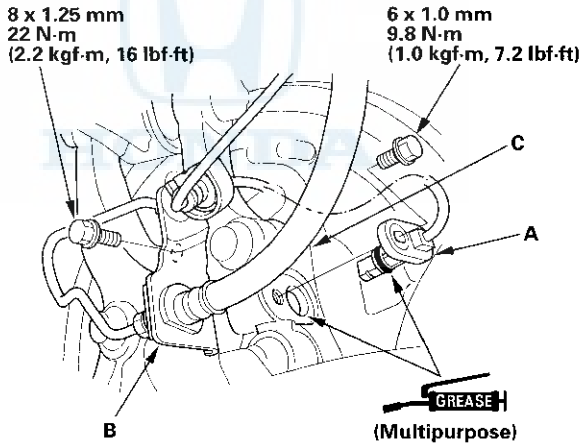

10. Clean the mating surfaces of the brake disc or the brake drum and the inside of the wheel, then install the rear wheel.

11. Check the wheel alignment, adjust it if necessary (see page 18-6).

Suspension

Front and Rear Suspension **18-2**

Front Suspension **18-14**

Rear Suspension **18-31**

TPMS (Tire Pressure Monitoring System) ('08-09 USA Models)

Component Location Index 18-52
General Troubleshooting Information 18-53
Memorizing the Tire Pressure Sensor ID 18-56
Tire Pressure Sensor Location 18-57
DTC Troubleshooting Index 18-59
Symptom Troubleshooting Index 18-60
System Description 18-61
Circuit Diagram 18-65
DTC Troubleshooting 18-67
Symptom Troubleshooting 18-75
TPMS Control Unit Replacement 18-79
Tire Pressure Sensor Replacement 18-80

Component Location Index

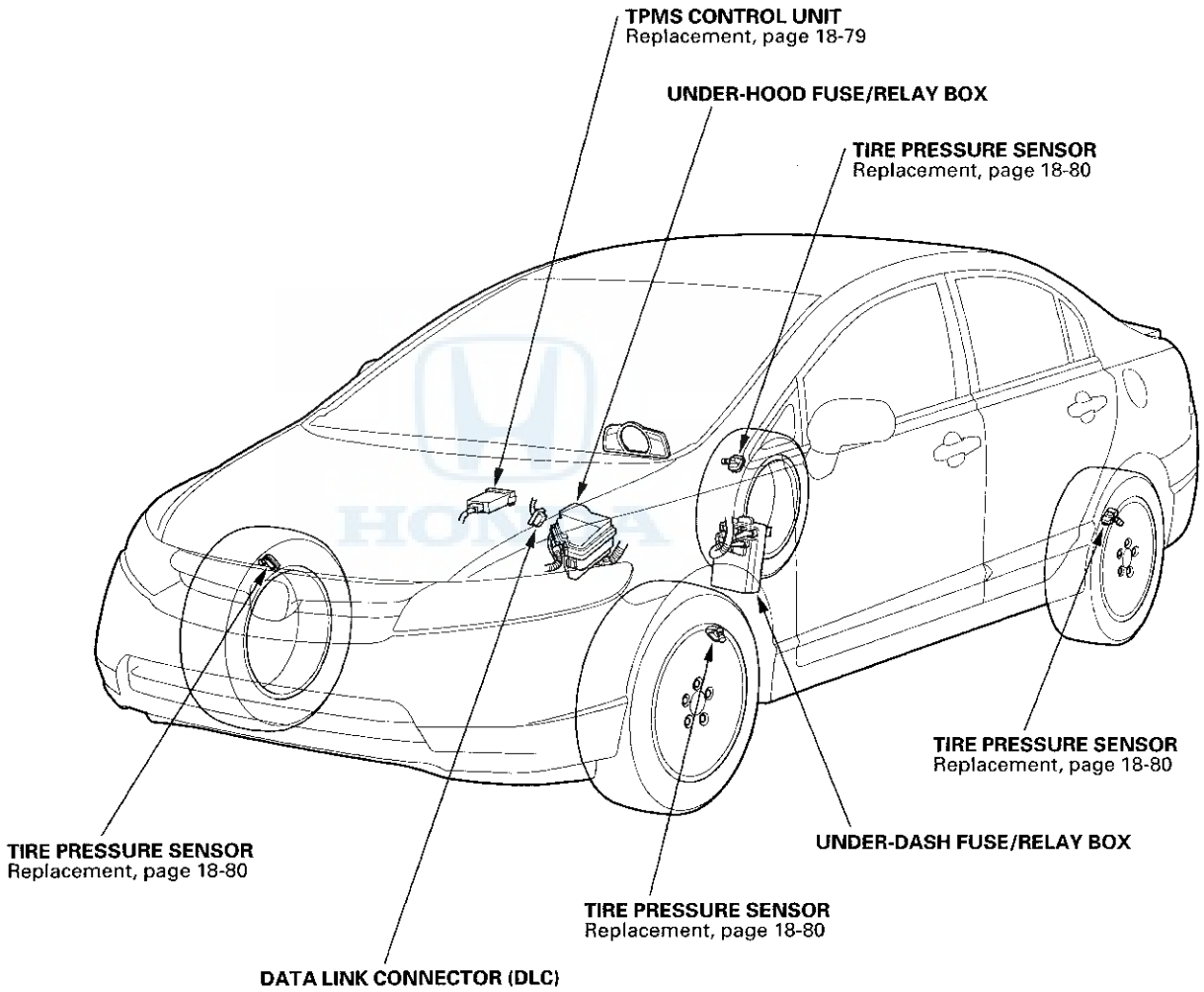

General Troubleshooting Information

System Indicator

The TPMS (tire pressure monitoring system) has the low tire pressure indicator and the TPMS indicator.

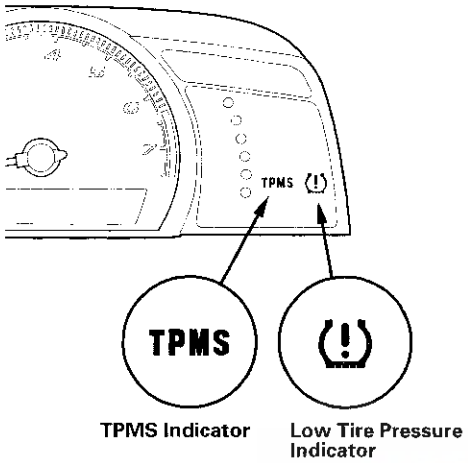

The Low Tire Pressure Indicator

- If the system detects low pressure in any of the four tires, the low tire pressure indicator comes on.
- When this happens, inflate the air and test-drive the vehicle at 28 mph (45 km/h) or more for at least 1 minute, and the low tire pressure indicator will go off.
- If the control unit detects a problem in the system during an indication of low tire pressure, it turns off the low tire pressure indicator, stores the DTC(s), and turns on the TPMS indicator.

The TPMS Indicator

- If a problem is detected in the system, the TPMS indicator comes on.
- If low tire pressure and a problem in the system are detected, only the TPMS indicator comes on.

If the system is OK, the TPMS indicator and the low tire pressure indicator should come on when you turn the ignition switch to ON (II), and then go off 2 seconds later. If they don't, there is a problem with the system.

DTC 11, 13, 15, 17

If the system detects low pressure in any of the four tires, the low tire pressure indicator comes on, and the control unit sets one or more of these codes: DTC 11, 13, 15, 17. When the tire pressure returns to normal, and the TPMS control unit receives the normal pressure signal from the tire pressure sensor, the control unit turns off the indicator. However TPMS control unit still retains the DTC(s).

NOTE: It is necessary to test-drive the vehicle at 28 mph (45 km/h) or more for at least 1 minute so that tire pressure sensor transmits the signal.

Pressure Changing by Temperature

Tire pressures increase slightly as the temperature in the tires rises during driving. Pressures can also increase or decrease slightly with changes in outside air temperature. A temperature change of about 18 °F (10 °C) changes tire pressure by about 10 kPa (0.1 kgf/cm^2, 1.5 psi). If the temperature drops, tire pressure could decrease just enough to turn on the low tire pressure indicator, but later, the tire temperature could increase enough to turn the indicator off. To resolve a complaint of such intermittent indications, confirm and clear the stored DTC(s) and check the tire pressures. Then explain to the customer how temperature changes can affect the system.

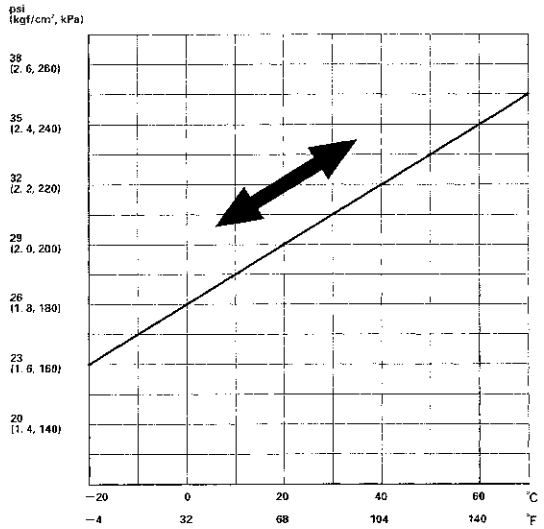

(cont'd)

General Troubleshooting Information (cont'd)

Problems That Are Not System Faults

- Tire Sealant
  Fluid sealant used to repair a punctured tire can damage the tire pressure sensor mounted on each wheel. It can prevent the system from detecting the correct tire pressure, which sets a DTC 11, 13, 15, or 17 even though the system is normal.
- Cold Weather
  When the weather is extremely cold, about −40 °F (−40 °C) or colder, the output of the lithium battery in each tire pressure sensor may drop far enough that the control unit sets a DTC for low battery voltage (31, 33, 35, or 37) even though the system is normal.
- Non-TPMS Wheels (Including Spare Tire)
  Vehicles equipped with TPMS must use wheels made for the system. Every TPMS wheel has an exclusive mark; do not use any other type of wheel.

When a flat tire is replaced with the spare tire, the TPMS indicator comes on (DTC 32, 34, 36, or 38) because the system is no longer receiving the signal from the flat tire's transmitter.
This is not a problem with the spare tire.

How a Diagnostic Trouble Code (DTC) is Set

- When the system detects a problem, the TPMS control unit sets a code, but shifts to fail-safe mode, and does not alert the driver to low tire pressures.
- If the TPMS control unit loses power, or fails, the TPMS indicator comes on, but no DTCs are set.
- The memory can hold all the DTCs that could possibly be set. However, when the same DTC is detected more than once, the most recent one overwrites the previous one, so only the latest DTC of each type is stored.
- DTCs are indicated in ascending order, not in the order they occurred.
- Set DTCs are stored in the EEPROM (nonvolatile memory), and cannot be cleared by disconnecting the battery. To clear a DTC, connect the HDS (Honda Diagnostic System) to the data link connector (DLC), and follow the screen prompts.

How to Troubleshoot DTCs

DTC troubleshooting procedures assume the cause of the problem is still present and the TPMS indicator is still on. Do not use a troubleshooting procedure unless the system has set the DTC listed for it.

NOTE: For DTCs 11, 13, 15, and 17 (tire low pressure), the TPMS indicator comes on only if the DTCs are caused by a system problem rather than low tire pressure.

1. Ask the customer to describe the conditions when the indicator came on, and try to reproduce the same conditions for troubleshooting. Find out if the customer checked and/or adjusted tire pressures since the indicator came on.

2. If an indicator does not come on during the test-drive, check for loose terminals, poor contact due to damaged terminals, etc. before you start troubleshooting.

3. After troubleshooting, repair and clear the DTCs, and test-drive the vehicle. Make sure no indicators come on.

4. Check for DTCs from other control units that are connected via the F-CAN. If there are DTCs that are related to the F-CAN, the most likely cause was that the ignition switch was turned to ON (II) with the TPMS control unit connector disconnected. Clear the DTCs. Check for PGM-FI and TPMS codes, and troubleshoot those first.

How to Retrieve DTCs

1. With the ignition switch in LOCK (0), connect the HDS (Honda Diagnostic System) to the data link connector (DLC) (A) located under the driver's side of the dashboard.

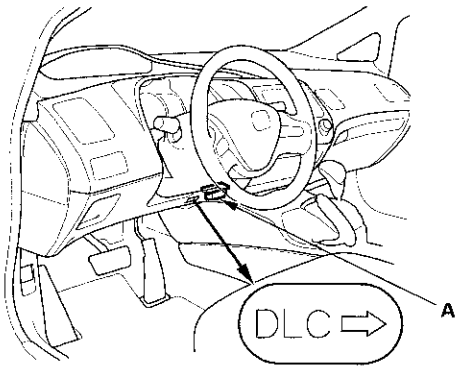

2. Turn the ignition switch to ON (II).

3. Make sure the HDS communicates with the vehicle and the TPMS control unit. If it doesn't, troubleshoot the DLC circuit (see page 11-213).

4. Follow the prompts on the HDS to display the DTC(s) on the screen. After determining the DTC, refer to the DTC troubleshooting.

   NOTE: See the HDS Help menu for specific instructions.

5. Turn the ignition switch to LOCK (0).

How to Clear DTCs

1. With the ignition switch in LOCK (0), connect the HDS to the data link connector (DLC) (A) located under the driver's side of the dashboard.

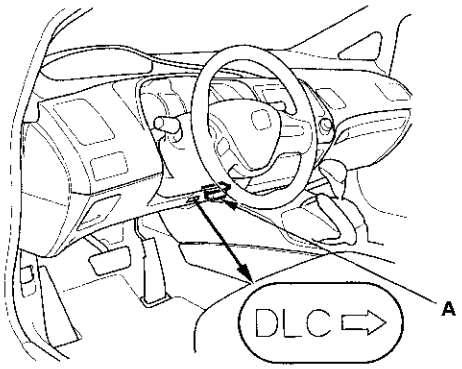

2. Turn the ignition switch to ON (II).

3. Make sure the HDS communicates with the vehicle and the TPMS control unit. If it doesn't, troubleshoot the DLC circuit (see page 11-213).

4. Clear the DTC(s) by following the screen prompts on the HDS.

   NOTE: See the HDS Help menu for specific instructions.

5. Turn the ignition switch to LOCK (0).

Memorizing the Tire Pressure Sensor ID

Special Tools Required
TPMS sensor initializer tool AKS0620006
Available through the Honda Tool and Equipment Program; call 888-424-6857

All four tire pressure sensor IDs must be memorized to the TPMS control unit whenever you do any of these actions:

- Replace the TPMS control unit.
- Replace the tire pressure sensor.
- Substitute a known-good wheel with tire pressure sensor.

NOTE:
- To ensure the control unit memorizes the correct ID, the vehicle with the new sensor must be at least 10 ft (3 m) away from other vehicles that have tire pressure sensors.
- When doing a tire rotation, memorizing the sensors in not needed.

1. With the ignition switch in LOCK (0), connect the HDS to the data link connector (DLC) (A) located under the driver's side of the dashboard.

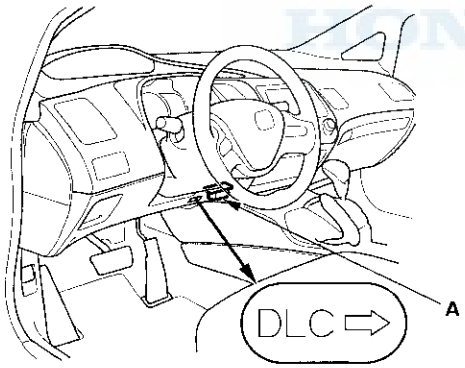

2. Turn the ignition switch to ON (II).

3. Make sure the HDS communicates with the vehicle and the TPMS control unit. If it doesn't, troubleshoot the DLC circuit (see page 11-213).

4. Select Sensor ID Learning from the mode menu on the HDS.

5. Follow HDS screen prompts to turn on the TPMS sensor initializer tool (A). Verify the power switch (B) is in the "Low" position.

   NOTE: If the power switch is in the "High" position, more than one sensor or sensors on other vehicles may be activated. Make sure the power switch is in the "Low" position.

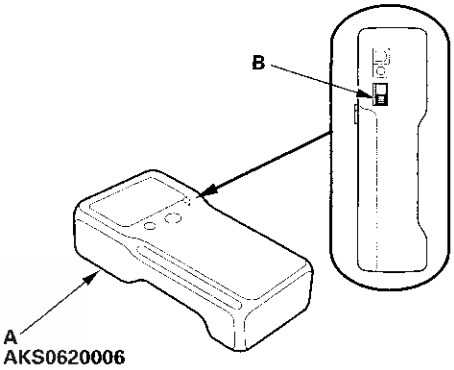

6. Hold the TPMS sensor initializer tool near one wheel, memorize the pressure sensor ID by following the screen prompts on the HDS.

   NOTE:
   - If you turn the ignition switch to LOCK (0) before memorizing all four sensor IDs, the memorizing ID is canceled.
   - If more than one sensor ID is displayed on the HDS, verify that the power switch is in the "Low" position, the vehicle has not been driven for 5 minutes, and there are no other vehicles within 10 ft (3 m).
   - See the HDS Help menu for specific instructions.

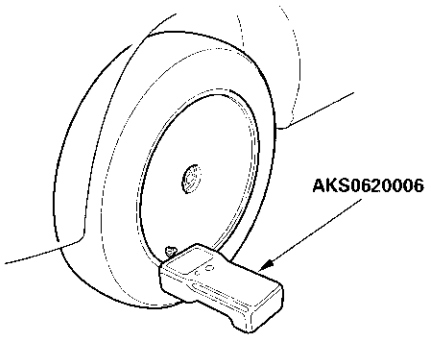

7. Repeat step 6 for each wheel until all four sensor IDs are memorized. When all four IDs are memorized, the low tire pressure indicator blinks.

8. Turn the ignition switch to LOCK (0).

9. Disconnect the HDS from the DLC.

10. Test-drive the vehicle at 28 mph (45 km/h) or more for at least 1 minute.

11. Make sure the low tire pressure indicator does not blink.

12. Make sure the tires are inflated to the specified tire pressure listed on the doorjamb sticker.

13. Turn the ignition switch to LOCK (0).

Tire Pressure Sensor Location

Special Tools Required
TPMS sensor initializer tool AKS0620006
Available through the Honda Tool and Equipment Program; call 888-424-6857

NOTE:
- This procedure locates where the tire pressure sensors 1, 2, 3, 4 are mounted, when activated by the TPMS sensor initializer tool.
- Position the vehicle at least 10 ft (3 m) away from other vehicles that have tire pressure sensors.

1. With the ignition switch at LOCK (0), connect the HDS to the data link connector (DLC) (A) located under the driver's side of the dashboard.

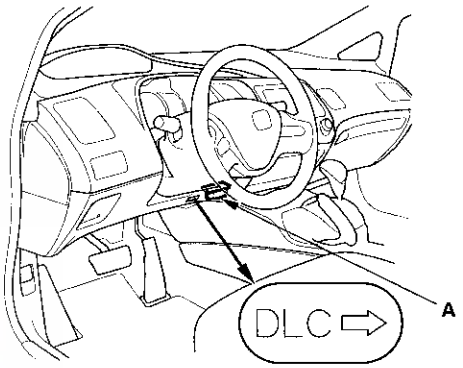

2. Turn the ignition switch to ON (II).

3. Make sure the HDS communicates with the vehicle and the TPMS control unit. If it doesn't, troubleshoot the DLC circuit (see page 11-213).

4. Select Function Test from the mode menu, then select Sensor Position Check on the HDS.

(cont'd)

Tire Pressure Sensor Location (cont'd)

5. Follow HDS screen prompts to turn on the TPMS sensor initializer tool (A). Verify the power switch (B) is in the "Low" position.

   NOTE: If the power switch is in the "High" position, more than one sensor or sensors on other vehicles may be activated. Make sure the power switch is in the "Low" position.

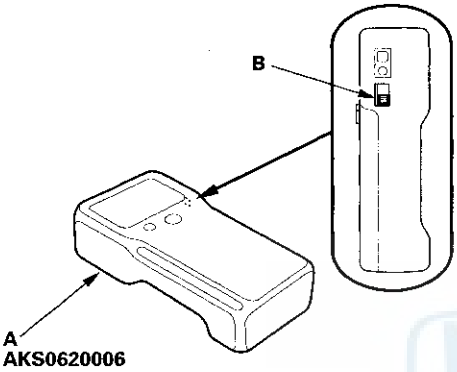

6. Follow the prompts on the HDS to activate the tire pressure sensors using the TPMS sensor initializer tool.

   NOTE: See the HDS Help menu for specific instructions.

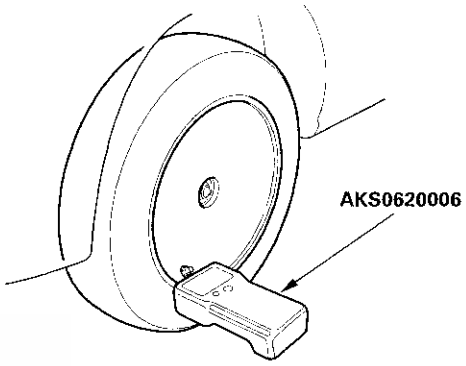

7. Check the HDS screen, and note the active sensor reception order of tire pressure sensor 1, 2, 3, 4.

   NOTE:
   - If the sensor does not respond to the TPMS sensor initializer tool, make sure the tool was turned on properly. Refer to the HDS.
   - If the tool start mode is OK, then rotate the tire 1/4 turn and retry.
   - If the sensor still does not respond after one full rotation of the tire, then check for DTC 32, 34, 36, and 38 with the HDS.

8. Turn the ignition switch to LOCK (0).

DTC Troubleshooting Index

DTC	Detection Item	Troubleshooting
11	Tire 1 Low Air Pressure	(see page 18-67)
13	Tire 2 Low Air Pressure	(see page 18-67)
15	Tire 3 Low Air Pressure	(see page 18-67)
17	Tire 4 Low Air Pressure	(see page 18-67)
21	Tire 1 Pressure Sensor Abnormally High Temperature	(see page 18-68)
22	Tire 2 Pressure Sensor Abnormally High Temperature	(see page 18-68)
23	Tire 3 Pressure Sensor Abnormally High Temperature	(see page 18-68)
24	Tire 4 Pressure Sensor Abnormally High Temperature	(see page 18-68)
31	Tire 1 Pressure Sensor Low Battery Voltage	(see page 18-69)
32	Tire 1 Pressure Sensor Transmission Failure	(see page 18-70)
33	Tire 2 Pressure Sensor Low Battery Voltage	(see page 18-69)
34	Tire 2 Pressure Sensor Transmission Failure	(see page 18-70)
35	Tire 3 Pressure Sensor Low Battery Voltage	(see page 18-69)
36	Tire 3 Pressure Sensor Transmission Failure	(see page 18-70)
37	Tire 4 Pressure Sensor Low Battery Voltage	(see page 18-69)
38	Tire 4 Pressure Sensor Transmission Failure	(see page 18-70)
41	Abnormal Signal Reception Error	(see page 18-71)
51	Tire 1 Pressure Sensor Registration Error	(see page 18-71)
53	Tire 2 Pressure Sensor Registration Error	(see page 18-71)
55	Tire 3 Pressure Sensor Registration Error	(see page 18-71)
57	Tire 4 Pressure Sensor Registration Error	(see page 18-71)
81	TPMS Control Unit Failure	(see page 18-72)
83	No VSP Signal	(see page 18-73)
85	F-CAN Communication Failure	(see page 18-73)
91	Tire 1 Pressure Sensor Internal Error	(see page 18-74)
93	Tire 2 Pressure Sensor Internal Error	(see page 18-74)
95	Tire 3 Pressure Sensor Internal Error	(see page 18-74)
97	Tire 4 Pressure Sensor Internal Error	(see page 18-74)

Symptom Troubleshooting Index

Symptom	Diagnostic procedure	Also check for
HDS does not communicate with the TPMS control unit or the vehicle	Troubleshooting the DLC circuit (see page 11-213)	
Low tire pressure indicator does not come on, and no DTCs are stored	Symptom Troubleshooting (see page 18-75)	
Low tire pressure indicator does not go off, and no DTCs are stored	Symptom Troubleshooting (see page 18-76)	
TPMS indicator does not come on, and no DTCs are stored	Symptom Troubleshooting (see page 18-77)	
TPMS indicator does not go off, and no DTCs are stored	Symptom Troubleshooting (see page 18-77)	

HONDA

System Description

TPMS Control Unit Inputs and Outputs for 20P Connector

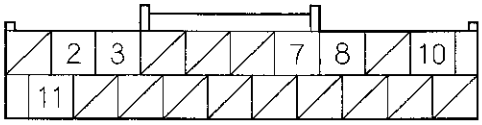

Wire side of female terminals

Terminal number	Wire color	Terminal sign	Description	Signal
2	WHT	CAN H (F-CAN communication signal high)	F-CAN communication circuit	Ignition switch ON (II): pulses
3	BLK	GND (Ground)	Ground for the TPMS control unit	Less than 0.1 V at all times
7	LT BLU	K-LINE (Data link connector)	Communications with the HDS	———
8	BRN	IG1 (Ignition switch 1)	Power source for activating the system	Ignition switch ON (II): battery voltage (about 12 V)
				Ignition switch in LOCK (0): less than 0.1 V
10	BLU	+B (Battery positive)	Power source for the TPMS control unit	Battery voltage at all times (about 12 V)
11	RED	CAN L (F-CAN communication signal low)	F-CAN communication circuit	Ignition switch ON (II): pulses

(cont'd)

System Description (cont'd)

System Structure

Once the vehicle speed exceeds 28 mph (45 km/h), the TPMS control unit monitors all four tire pressure sensors and the system function. If it detects low pressure in a tire, it alerts the driver by turning on the low tire pressure indicator. If it detects a problem in the system, it turns on the TPMS indicator.

Control unit
Mounted inside of the dash, the TPMS control unit receives wireless pressure sensor ID signals every time the vehicle speeds exceeds 28 mph (45 km/h). It also receives wireless signals from the transmitters for tire pressure and the sensor condition, and it continuously monitors and controls the system. The TPMS control unit cannot directly determine the position (location) of a tire pressure sensor(s) on the vehicle since it is a wireless system. TPMS sensor locations will change during scheduled vehicle maintenance (tire rotation).

NOTE: To determine the actual location of each TPMS wheel sensor on the vehicle, do the tire pressure sensor location procedure (see page 18-57). Once the tire pressure sensor locations are identified, write the sensor ID on the side wall of the tire with a tire crayon to eliminate confusion.

Indicators
Two indicators are in the gauge control module (tach): The low tire pressure indicator comes on when any tire pressure is low, and the TPMS indicator that comes on only if there's a problem with the system.
The low tire pressure indicator alerts the driver that a tire(s) pressure is low, but does not specify the tire(s) location.

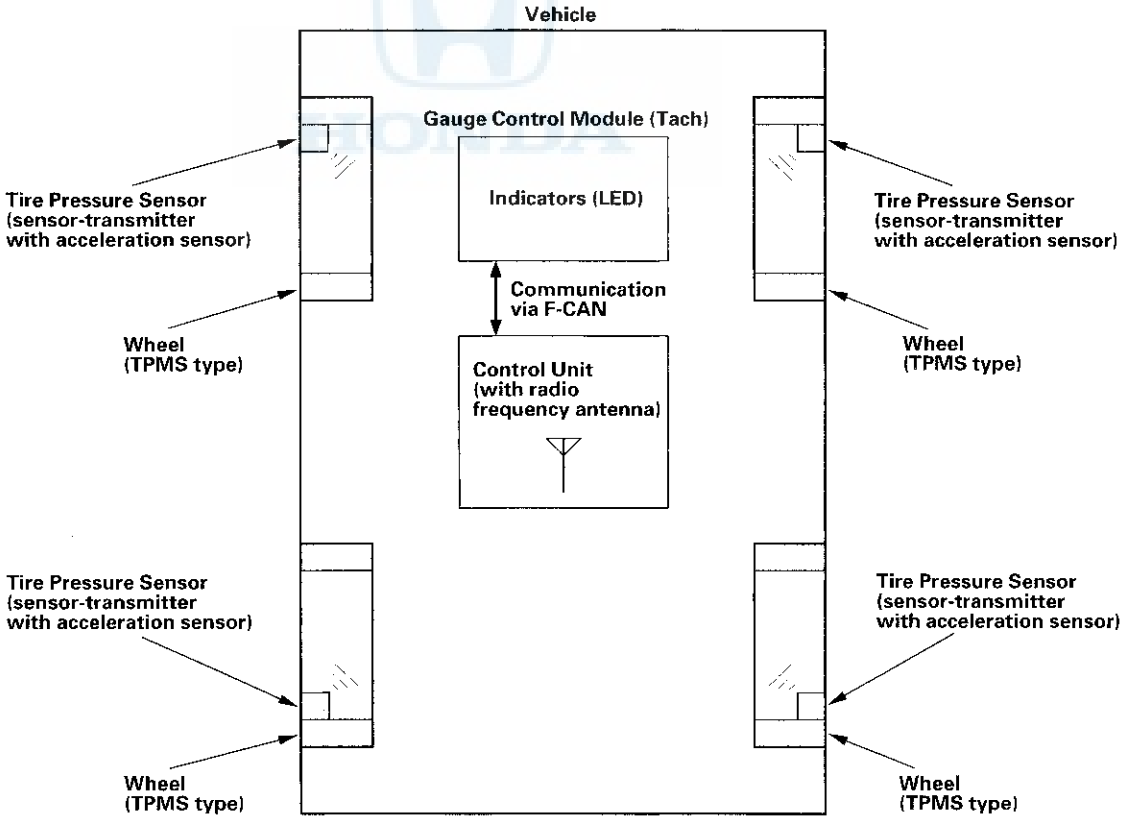

Tire pressure sensor
Each sensor is an integrated unit made up of the tire valve stem, a tire pressure sensor, and a transmitter. The unit is attached to the inside of the wheel, around the valve stem. The sensor transmits the internal tire information to the control unit once every 60 seconds when the vehicle speed exceeds 28 mph (45 km/h). When the TPMS control unit receives a tire pressure signal that is less than 175 kPa (1.8 kgf/cm^2, 25 psi), the TPMS control unit then turns on the low tire pressure indicator. When that tire's pressure is increased to more than 200 kPa (2.0 kgf/cm^2, 29 psi), and the vehicle is driven above 28 mph (45 km/h) the transmitter sends the tire pressure signal to the control unit, and then the control unit turns the indicator off.

NOTE: Do not mix the TPMS tire pressure sensors or wheels with other TPMS types. Be sure to use the correct type sensors and wheels for this system.
Sensor are active:
- When the wheel rotates over 28 mph (45 km/h), the sensor detects the momentum, switches the sensor to the normal function mode.
- The LF (low frequency) signal of the TPMS initializer tool makes the sensor active even though the vehicle is stopped. The tire pressure sensor goes into sleep mode when the acceleration sensor detects the wheel is stationary for 5 minutes or more continuously.

Wheels
The TPMS will not work unless TPMS type wheels are installed on the vehicle. The original equipment wheels have a "TPMS" mark (A) on them and are counterweighted (B) the opposite of the tire pressure sensor (C), and counterbalance the weight of the sensor.

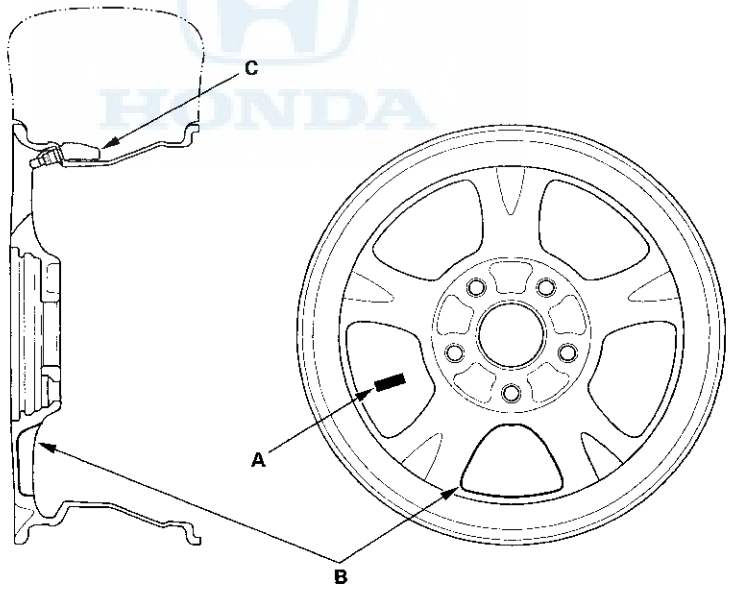

(cont'd)

System Description (cont'd)

System Communication

- When the vehicle is traveling more than 28 mph (45 km/h), an RF (radio frequency) band wave signal is transmitted from each tire pressure sensor to the control unit.
- When the wheels rotate, and the tire pressure sensors momentum is detected, switching them from sleep mode to normal function (awake) mode. After the vehicle is stationary for 5 minutes, the sensors switch from normal function mode back to sleep mode to extend their battery life.
- Each tire pressure sensor has its own ID to prevent jamming by similar systems on other vehicles. After memorizing all the sensor IDs, the control unit recognizes only those specific signals.
- An ID cannot be memorized automatically. The control unit knows which ID belongs to each tire pressure sensor. This recurring ID confirmation prevents any confusion in the system as a result of normal tire rotation.

NOTE: Be careful not to bend the brackets on the TPMS control unit: Misalignment of the control unit could interfere with sending and receiving signals.

Control Unit
(With Radio Frequecy Antenna)

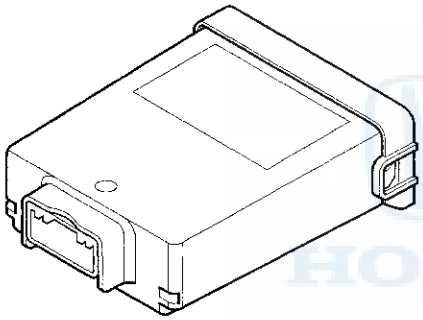

Tire Pressure Sensor
(Sensor-transmitter with acceleration sensor)

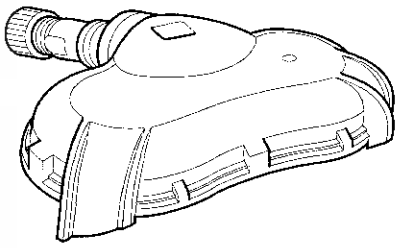

Circuit Diagram

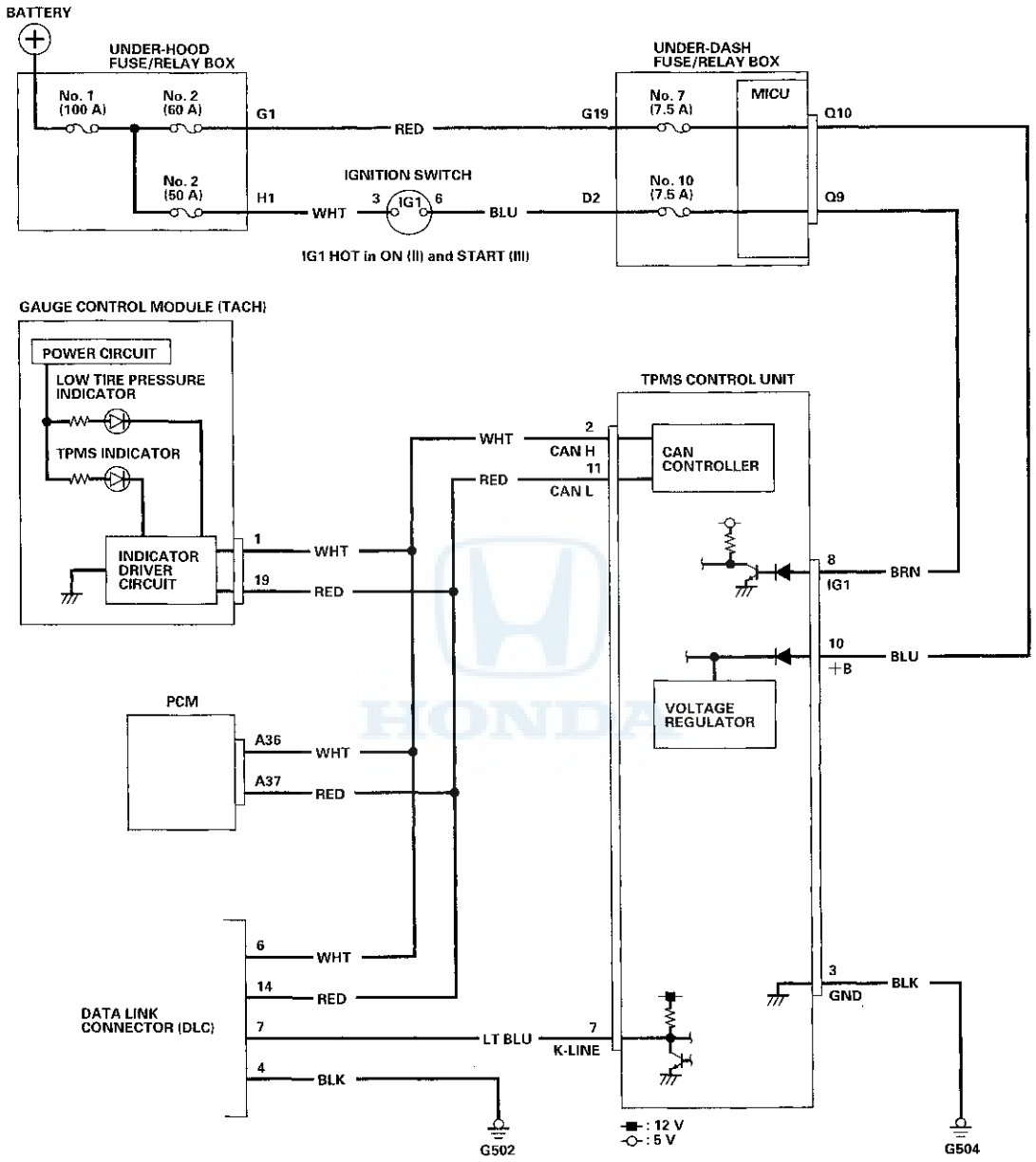

(cont'd)

Circuit Diagram (cont'd)

UNDER-DASH FUSE/RELAY BOX CONNECTOR Q (16P)

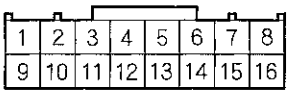

Wire side of female terminals

GAUGE CONTROL MODULE (TACH) 36P CONNECTOR

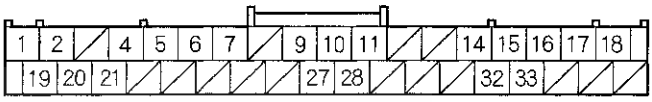

Wire side of female terminals

TPMS CONTROL UNIT 20P CONNECTOR

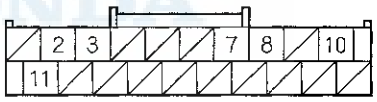

Wire side of female terminals

PCM CONNECTOR A (44P)

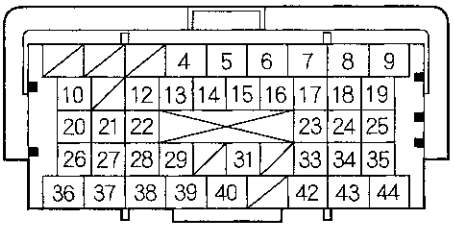

Terminal side of female terminals

DATA LINK CONNECTOR (DLC)

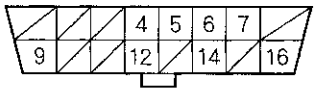

Terminal side of female terminals

DTC Troubleshooting

DTC 11, 13, 15, 17: Tire Low Air Pressure

NOTE: If low tire pressure is detected, the control unit sets one or more of these DTCs, and turns on the low tire pressure indicator. If the low tire pressure indicator comes on because of a low tire pressure, and the customer corrects it before bringing the vehicle in, the DTCs will be stored, but the indicator turns off.

1. Turn the ignition switch to LOCK (0).

2. Make sure the tires are inflated to the specified tire pressure listed on the doorjamb sticker.

3. Test-drive the vehicle at 28 mph (45 km/h) or more for at least 1 minute.

   Does the low tire pressure indicator go off?

   YES—The system is OK at this time. Check for and repair the cause of air loss. ■

   NO—Go to step 4.

4. Check for DTCs with the HDS.

5. Note the tire pressure sensor(s) number by the indicated DTC.

DTC	Tire Pressure Sensor Number
11	No. 1
13	No. 2
15	No. 3
17	No. 4

6. Do the tire pressure sensor location procedure to determine the affected tire location and relate it to the tire pressure sensor number (see page 18-57).

7. Check the TIRE 1, TIRE 2, TIRE 3, or TIRE 4 AIR PRESSURE in the TPMS DATA LIST with the HDS, and compare it with the actual measured tire pressure.

   Is the indicated tire pressure on the HDS within 40 kPa (0.4 kgf/cm², 6 psi) of the actual tire pressure?

   YES—Go to step 8.

   NO—Replace the appropriate tire pressure sensor (see page 18-80). ■

8. Clear the DTC with the HDS.

9. Test-drive the vehicle at 28 mph (45 km/h) or more for at least 1 minute.

10. Check for DTCs with the HDS.

    Is DTC 11, 13, 15, or 17 indicated?

    YES—Replace the TPMS control unit (see page 18-79). ■

    NO—If any other DTCs are indicated, troubleshoot the appropriate DTC. If no DTCs are indicated, the system is OK at this time. ■

DTC Troubleshooting (cont'd)

DTC 21, 22, 23, 24: Tire Pressure Sensor Abnormally High Temperature

1. Turn the ignition switch to LOCK (0).

2. Make sure the tires have cooled down.

   NOTE: An abnormal rise in the internal temperature of the tires can be caused by
   - Excessive braking
   - Failure to release the parking brake (rear tires only)
   - Leaving the vehicle running while parked (front tires only)
   - Improper assembly of a wheel and tire

3. Test-drive the vehicle at 28 mph (45 km/h) or more for at least 1 minute.

   Does the TPMS indicator go off?

   YES—The system is OK at this time. Clear the DTC with the HDS. ■

   NO—Go to step 4.

4. Check for DTCs with the HDS.

5. Note the tire pressure sensor(s) number by the indicated DTC.

DTC	Tire Pressure Sensor Number
21	No. 1
22	No. 2
23	No. 3
24	No. 4

6. Do the tire pressure sensor location procedure to determine the affected tire location and relate it to the tire pressure sensor number (see page 18-57).

7. Check the TIRE 1, TIRE 2, TIRE 3, or TIRE 4 AIR TEMPERATURE in the TPMS DATA LIST with the HDS.

   Is 176 °F (80 °C) or more indicated?

   YES—Replace the appropriate tire pressure sensor (see page 18-80). ■

   NO—Go to step 8.

8. Clear the DTC with the HDS.

9. Test-drive the vehicle at 28 mph (45 km/h) or more for at least 1 minute.

10. Check for DTCs with the HDS.

    Is DTC 21, 22, 23, or 24 indicated?

    YES—Check for loose terminals and poor connections at the TPMS control unit. If necessary, substitute a known-good TPMS control unit (see page 18-79), and recheck. ■

    NO—If any other DTCs are indicated, troubleshoot the appropriate DTC. If no DTC are indicated, the system is OK at this time. ■

DTC 31, 33, 35, 37: Tire Pressure Sensor Low Battery Voltage

NOTE: This problem occurs when the temperature around the sensor is −40 ℉ (−40 ℃) or less. Note that the diagnosis must be made in a place where ambient temperature is −40 ℉ (−40 ℃) or more.

1. Test-drive the vehicle at 28 mph (45 km/h) or more for at least 1 minute.

   Does the TPMS indicator go off?

   YES—The system is OK at this time. Clear the DTC with the HDS. ■

   NO—Go to step 2.

2. Check for DTCs with the HDS.

3. Note the tire pressure sensor(s) number by the indicated DTC.

DTC	Tire Pressure Sensor Number
31	No. 1
33	No. 2
35	No. 3
37	No. 4

4. Do the tire pressure sensor location procedure to determine the affected tire location and relate it to the tire pressure sensor number (see page 18-57).

   Did each tire pressure sensor respond to the TPMS initializer tool?

   YES—Go to step 5.

   NO—Check that the tire pressure sensor is properly mounted. If necessary, replace the appropriate tire pressure sensor (see page 18-80). ■

5. Check the TIRE 1, TIRE 2, TIRE 3, or TIRE 4 PRESSURE SENSOR TRANSMITTER BATTERY in the TPMS DATA LIST with the HDS.

   Is LOW indicated?

   YES—Replace the appropriate tire pressure sensor (see page 18-80). ■

   NO—Check for loose terminals and poor connections at the TPMS control unit. If necessary, substitute a known-good TPMS control unit (see page 18-79), and recheck. ■

HONDA

DTC Troubleshooting (cont'd)

DTC 32, 34, 36, 38: Tire Pressure Sensor Transmission Failure

NOTE: Inspect for an aftermarket electrical device(s) (such as an inverter, battery charger, etc) interfering with the RF signal from the sensors when driving the vehicle.

1. Turn the ignition switch to LOCK (0).

2. Make sure all four wheels are TPMS wheels with the mounted tire pressure sensor.

   Are TPMS type wheels with a tire pressure sensor mounted on the vehicle?

   YES—Go to step 3.

   NO—Install the TPMS wheel, and then memorize the pressure sensor ID with the HDS (see page 18-56).■

3. Turn the ignition switch to ON (II).

4. Check for DTCs with the HDS.

5. Note the tire pressure sensor(s) number by the indicated DTC.

DTC	Tire Pressure Sensor Number
32	No. 1
34	No. 2
36	No. 3
38	No. 4

6. Do the tire pressure sensor location procedure to determine the affected tire location and relate it to the tire pressure sensor number (see page 18-57).

   Did each tire pressure sensor respond to the TPMS initializer tool?

   YES—Go to step 7.

   NO—Check for an aftermarket electrical device(s) interfering with the RF signals from the sensors. If there are no electrical devices causing interference, replace the appropriate tire pressure sensor (see page 18-80).■

7. Turn the ignition switch to LOCK (0), and wait 5 minutes or more.

8. Test-drive the vehicle at 28 mph (45 km/h) or more for at least 1 minute.

9. Check the TIRE 1, TIRE 2, TIRE 3, or TIRE 4 PRESSURE SENSOR TRANSMITTER STATUS in the TPMS DATA LIST with the HDS.

   Is NORMAL indicated for all four tires within one full turn of each tire?

   YES—The system is OK at this time. Clear the DTC with the HDS.■

   NO—Replace the appropriate pressure sensor (see page 18-80).■

DTC 41: Abnormal Signal Reception Error

NOTE:
- Inspect for an aftermarket electrical device(s) (such as an inverter, battery charger, etc) interfering with the RF signal from the sensors when driving the vehicle.
- If DTC 32, 34, 36, or 38 is also set, troubleshoot those DTCs first.

1. Turn the ignition switch to LOCK (0).

2. Make sure all four wheels are TPMS wheels with the mounted tire pressure sensors.

   Are TPMS type wheels with tire pressure sensors mounted on the vehicle?

   YES—Go to step 3.

   NO—Install the TPMS wheel, and then memorize the pressure sensor ID with the HDS (see page 18-56). ■

3. Memorize the tire pressure sensor ID with the HDS (see page 18-56).

   Did each tire pressure sensor respond to the TPMS initializer tool?

   YES—The system is OK at this time, clear the DTC with the HDS. ■

   NO—Replace the TPMS control unit (see page 18-79). ■

DTC 51, 53, 55, 57: Tire Pressure Sensor Registration Error

NOTE:
- These DTCs will only set during initialization with the HDS.
- Inspect for an aftermarket electrical device(s) (such as an inverter, battery charger, etc) interfering with the RF signal from the sensors when driving the vehicle.

1. Turn the ignition switch to LOCK (0).

2. Make sure all four wheels are TPMS wheels with the mounted tire pressure sensors.

   Are TPMS type wheels with a tire pressure sensor mounted on the vehicle?

   YES—Go to step 3.

   NO—Install the TPMS wheel, and then memorize the pressure sensor ID with the HDS (see page 18-56). ■

3. Turn the ignition switch to ON (II).

4. Check for DTCs with the HDS.

5. Note the tire pressure sensor(s) number by the indicated DTC.

DTC	Tire Pressure Sensor Number
51	No. 1
53	No. 2
55	No. 3
57	No. 4

(cont'd)

DTC Troubleshooting (cont'd)

6. Do the tire pressure sensor location procedure to determine the affected tire location and relate it to the tire pressure sensor number (see page 18-57).

   Did each tire pressure sensor respond to the TPMS initializer tool?

   YES—Go to step 7.

   NO—Check for an aftermarket electrical device interfering with the RF signals from the sensors. If there are no electrical devices causing interference, replace the appropriate tire pressure sensor (see page 18-80). ■

7. Turn the ignition switch to LOCK (0), and wait 5 minutes or more.

8. Test-drive the vehicle at 28 mph (45 km/h) or more for at least 1 minute.

9. Check for DTCs with the HDS.

   Is DTC 51, 53, 55, or 57 indicated?

   YES—Check for loose terminals and poor connections at the TPMS control unit. If necessary, substitute a known-good TPMS control unit (see page 18-79), and recheck. ■

   NO—The system is OK at this time. Clear the DTC with the HDS. ■

DTC 81: TPMS Control Unit Failure

NOTE: Low battery voltage can cause this DTC. Make sure the battery is fully charged and in good condition (see page 22-60).

1. Turn the ignition switch to ON (II).

2. Clear the DTC with the HDS.

3. Turn the ignition switch to LOCK (0), then turn the ignition switch to ON (II) again.

4. Check for DTCs with the HDS.

   Is DTC 81 indicated?

   YES—Replace the TPMS control unit (see page 18-79). ■

   NO—The system is OK at this time. ■

DTC 83: No VSP Signal

NOTE: If DTC 85 stored at the same time as DTC 83, troubleshoot DTC 85 first, then recheck for DTC 83.

1. Turn the ignition switch to ON (II).
2. Clear the DTC with the HDS.
3. Test-drive the vehicle at 7 mph (10 km/h) or more.
4. Check the speedometer.

   Does the speedometer register speed?

   YES—Go to step 5.

   NO—Update the PCM if it does not have the latest software (see page 11-236), or substitute a known-good PCM (see page 11-7), then go to step 1 and recheck. If the PCM was updated and DTCs are not indicated, troubleshooting is complete. If the PCM was substituted and DTCs are not indicated, replace the original PCM (see page 11-238).■

5. Check the VEHICLE SPEED in the TPMS DATA LIST with the HDS.

   Is the vehicle speed indicated?

   YES—The system is OK at this time.■

   NO—Substitute a known-good TPMS control unit (see page 18-79), and recheck.■

DTC 85: F-CAN Communication Failure

NOTE: Check for fuel and emission systems DTCs with the HDS, and troubleshoot the PCM and F-CAN communication errors first (see page 11-3).

1. Turn the ignition switch to ON (II).
2. Clear the DTC with the HDS.
3. Turn the ignition switch to LOCK (0), then turn the ignition switch to ON (II) again.
4. Wait about 5 seconds.
5. Check for DTCs with the HDS.

   Is DTC 85 indicated?

   YES—Go to step 6.

   NO—The system is OK at this time.■

6. Test-drive the vehicle.

   Does the speedometer work?

   YES—Go to step 10.

   NO—Go to step 7.

7. Turn the ignition switch to LOCK (0).
8. Disconnect the TPMS control unit 20P connector.
9. Test-drive the vehicle.

   Does the speedometer work?

   YES—Check for loose terminals and poor connections at the TPMS control unit. If necessary, substitute a known-good TPMS control unit (see page 18-79), and recheck.■

   NO—Turn the ignition switch to LOCK (0), and reconnect all the connectors, then check and troubleshoot the fuel and emissions system (see page 11-3).■

(cont'd)

DTC Troubleshooting (cont'd)

10. Turn the ignition switch to LOCK (0).

11. Short the SCS line with the HDS.

12. Disconnect PCM connector A (44P).

13. Disconnect the TPMS control unit 20P connector.

14. Check for continuity between the TPMS control unit 20P connector terminals and the PCM connector A (44P) terminals according to the table.

Terminal Name	TPMS Control Unit 20P Connector Terminal	PCM Connector A (44P) Terminal
CAN L	No. 11	No. 37
CAN H	No. 2	No. 36

TPMS CONTROL UNIT 20P CONNECTOR
Wire side of female terminals

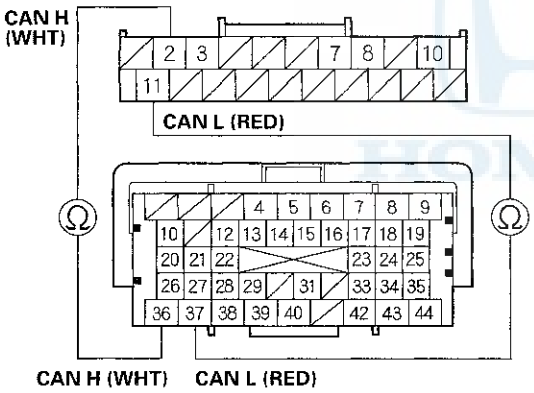

PCM CONNECTOR A (44P)
Terminal side of female terminals

Is there continuity?

YES—Check for loose terminals and poor connections at the TPMS control unit and G504. If necessary, substitute a known-good TPMS control unit (see page 18-79), and recheck. ■

NO—Repair open in the wire between the TPMS control unit and the PCM. ■

DTC 91, 93, 95, 97: Tire Pressure Sensor Internal Error

1. Turn the ignition switch to ON (II).

2. Check for DTCs with the HDS.

3. Note the tire pressure sensor(s) number by the indicated DTC.

DTC	Tire Pressure Sensor Number
91	No. 1
93	No. 2
95	No. 3
97	No. 4

4. Do the tire pressure sensor location procedure to determine the affected tire location and relate it to the tire pressure sensor number (see page 18-57).

   Did each tire pressure sensor respond to the TPMS initializer tool?

   YES—Go to step 5.

   NO—Check that the tire pressure sensor is properly mounted. If necessary, replace the appropriate tire pressure sensor (see page 18-80). ■

5. Clear the DTC with the HDS.

6. Test-drive the vehicle at 28 mph (45 km/h) or more for at least 1 minute.

7. Check for DTCs with the HDS.

   Is DTC 91, 93, 95, or 97 indicated?

   YES—Replace the appropriate tire pressure sensor (see page 18-80) and recheck. If DTCs are still present, substitute a known-good TPMS control unit (see page 18-79), and recheck. ■

   NO—If any other DTCs are indicated, troubleshoot the appropriate DTC. If no DTCs are indicated, the system is OK at this time. ■

Symptom Troubleshooting

Low tire pressure indicator does not come on, and no DTCs are stored

NOTE: Check for gauge DTCs with the HDS (see page 22-6). If gauge DTCs are stored, troubleshoot those DTCs first.

1. Turn the ignition switch to ON (II).

2. Check the low tire pressure indicator for several seconds when the ignition switch is turned ON (II).

   Did the indicator come on, and then go off?

   YES—Go to step 3.

   NO—Do the troubleshooting for the gauge control module (see page 22-223). If necessary, substitute a known-good gauge control module (tach) (see page 22-255), and recheck. ■

3. Test-drive the vehicle at 28 mph (45 km/h) or more for at least 1 minute.

4. Stop the vehicle, and lower the pressure in each tire until the low tire pressure indicator comes on (see table).

   NOTE:
   - Reinflate the tire before continuing to the next tire.
   - After noting whether the low tire pressure indicator came on, make sure it goes off when you reinflate the tire before proceeding to the next tire.
   - If 5 minutes has passed since finishing the last test-drive, reactivate the appropriate tire pressure sensor using the TPMS sensor initializer tool (see page 18-57).

   Does the indicator come on when the pressure drops below 175 kPa (1.8 kgf/cm², 25 psi) or less?

   YES—The system is OK at this time. ■

   NO—Go to step 5.

5. Do the tire pressure sensor location procedure to determine the affected tire location and relate it to the tire pressure sensor number (see page 18-57).

   Did each tire pressure sensor respond to the TPMS initializer tool?

   YES—Go to step 6.

   NO—Check that the tire pressure sensor is properly mounted. If necessary, replace the appropriate tire pressure sensor (see page 18-80). ■

6. Check the TIRE 1, TIRE 2, TIRE 3, or TIRE 4 AIR PRESSURE in the TPMS DATA LIST with the HDS, and compare with the actual measured tire pressure.

   Is the indicated tire pressure on the HDS within 40 kPa (0.4 kgf/cm², 6 psi) of the actual tire pressure?

   YES—Go to step 7.

   NO—Replace the appropriate tire pressure sensor (see page 18-80). ■

7. Turn the ignition switch to LOCK (0).

(cont'd)

Symptom Troubleshooting (cont'd)

8. Disconnect the TPMS control unit 20P connector.

9. Measure the voltage between TPMS control unit 20P connector terminals No. 3 and No. 8.

TPMS CONTROL UNIT 20P CONNECTOR

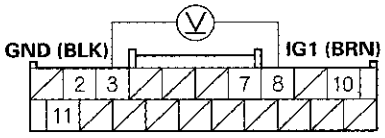

Wire side of female terminals

Is there battery voltage?

YES—Repair short to power in the wire between the TPMS control unit and the No. 10 (7.5 A) fuse in the under-dash fuse/relay box. ■

NO—Check for loose terminals and poor connections at the TPMS control unit. If necessary, substitute a known-good TPMS control unit (see page 18-79), and recheck. ■

Low tire pressure indicator does not go off, and no DTCs are stored

1. Turn the ignition switch to LOCK (0).

2. Disconnect the TPMS control unit 20P connector.

3. Turn the ignition switch to ON (II).

4. Check the low tire pressure indicator for several seconds when the ignition switch is turned ON (II).

   Did the indicator come on, and then go off?

   YES—Check for loose terminals and poor connections at the TPMS control unit. If necessary, substitute a known-good TPMS control unit (see page 18-79), and recheck. ■

   NO—Do the troubleshooting for the gauge control module (see page 22-223). If necessary, substitute a known-good gauge control module (tach) (see page 22-255), and recheck. ■

TPMS indicator does not come on, and no DTCs are stored

1. Turn the ignition switch to LOCK (0).
2. Disconnect the TPMS control unit 20P connector.
3. Turn the ignition switch to ON (II).
4. Check the TPMS indicator for several seconds when the ignition switch is turned ON (II).

   Did the indicator come on?

   YES—Check for loose terminals and poor connections at the TPMS control unit. If necessary, substitute a known-good TPMS control unit (see page 18-79), and recheck. ■

   NO—Do the troubleshooting for the gauge control module (see page 22-223). If necessary, substitute a known-good gauge control module (tach) (see page 22-255), and recheck. ■

TPMS indicator does not go off, and no DTCs are stored

NOTE: Check for gauge DTCs with the HDS (see page 22-6). If gauge DTCs are stored, troubleshoot those DTCs first.

1. Turn the ignition switch to ON (II).
2. Check the TPMS indicator for several seconds when the ignition switch is turned ON (II).

   Did the indicator come on, and then go off?

   YES—The system is OK at this time. ■

   NO—Go to step 3.

3. Turn the ignition switch to LOCK (0).
4. Check the No. 7 (7.5 A) fuse in the under-dash fuse/relay box.

   Is the fuse blown?

   YES—Replace the No. 7 (7.5 A) fuse, and recheck. If the fuse blows again, check for a short to body ground in the wire between the TPMS control unit and the No. 7 (7.5 A) fuse in the under-dash fuse/relay box. ■

   NO—Reinstall the checked fuse, then go to step 5.

5. Check the No. 10 (7.5 A) fuse in the under-dash fuse/relay box.

   Is the fuse blown?

   YES—Replace the No. 10 (7.5 A) fuse, and recheck. If the fuse blows again, check for a short to body ground in the wire between the TPMS control unit and the No. 10 (7.5 A) fuse in the under-dash fuse/relay box. ■

   NO—Reinstall the checked fuse, then go to step 6.

6. Disconnect the TPMS control unit 20P connector.

(cont'd)

Symptom Troubleshooting (cont'd)

7. Measure the voltage between body ground and TPMS control unit 20P connector terminal No. 10.

TPMS CONTROL UNIT 20P CONNECTOR

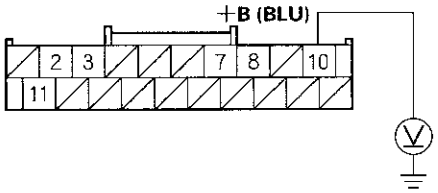

Wire side of female terminals

Is there battery voltage?

YES—Go to step 8.

NO—Repair open in the wire between the TPMS control unit and the No. 7 (7.5 A) fuse in the under-dash fuse/relay box. ■

8. Turn the ignition switch to ON (II).

9. Measure the voltage between body ground and TPMS control unit 20P connector terminal No. 8.

TPMS CONTROL UNIT 20P CONNECTOR

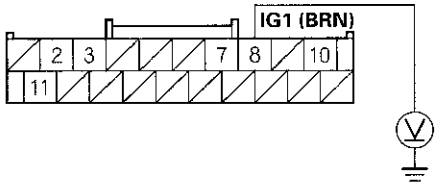

Wire side of female terminals

Is there battery voltage?

YES—Go to step 10.

NO—Repair open in the wire between the TPMS control unit and the No. 10 (7.5 A) fuse in the under-dash fuse/relay box. ■

10. Turn the ignition switch to LOCK (0).

11. Reconnect the TPMS control unit 20P connector.

12. Turn the ignition switch to ON (II).

13. Measure the voltage between body ground and TPMS control unit 20P connector terminal No. 3.

TPMS CONTROL UNIT 20P CONNECTOR

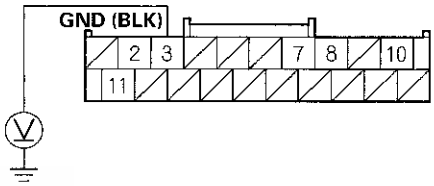

Wire side of female terminals

Is there 0.1 V or more?

YES—Repair open or high resistance in the wire between the TPMS control unit and body ground (G504). ■

NO—Do the troubleshooting for the gauge control module (see page 22-223). If the gauge control module (tach) is OK, check for loose terminals and poor connections at the TPMS control unit. If necessary, substitute a known-good TPMS control unit (see page 18-79), and recheck. ■

TPMS Control Unit Replacement

NOTE: Make sure the TPMS control unit mounting bracket is not bent or twisted as this may affect its communication with the tire pressure sensors.

1. Turn the ignition switch to LOCK (0).

2. Remove the driver's dashboard undercover (see page 20-90).

3. Disconnect the TPMS control unit connector (A).

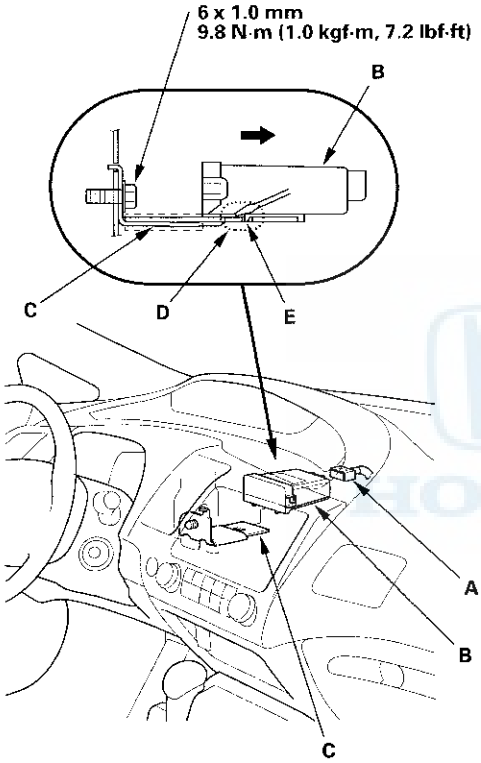

4. Remove the TPMS control unit (B) from the bracket (C).

   NOTE: To disconnect the TPMS control unit from its bracket, insert a small flat-tipped screwdriver between the TPMS control unit and the bracket shown in (D) to release the hook (E), then slide out the TPMS unit.

5. Replace the bracket if necessary.

6. Install the new TPMS control unit in the reverse order of removal.

   NOTE: Make sure the TPMS control unit is properly installed. You will hear a click when the TPMS control unit is securely mounted on the bracket.

7. Connect the HDS, and memorize the pressure sensor IDs using the TPMS sensor initializer tool (see page 18-56).

Tire Pressure Sensor Replacement

Removal

1. Raise the vehicle, and support it with safety stands in the proper locations (see page 1-10).

2. Remove the wheel with the faulty sensor.

3. Remove the tire valve stem cap and the valve stem core, to deflate the tire.

4. Remove any balance weights, and then break the bead loose from the wheel with a commercially available tire changer (A).

   NOTICE
   Note these items to avoid damaging the tire pressure sensor:
   - Do the outside of the wheel first.
   - Position the wheel as shown so the valve stem (B) is 90 degrees from the bead breaker (C) as shown.
   - Do not position the bead breaker of the tire changer too close to the rim.

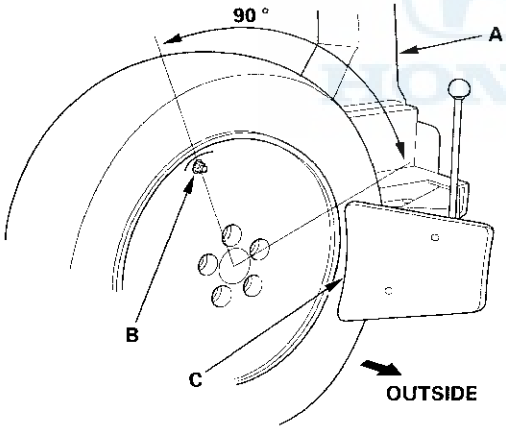

5. Position the wheel so the tire machine (A) and tire iron (B) are next to the valve stem (C), and will move away from it when the machine starts. Then remove the tire from the wheel.

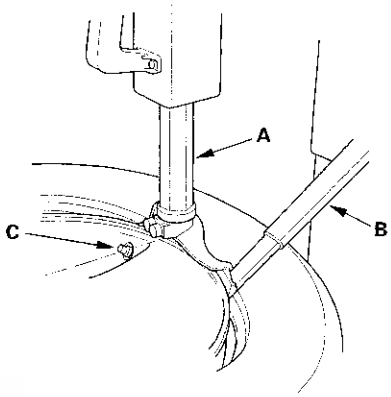

6. Remove the valve stem nut (A) and the washer (B), then remove the tire pressure sensor with the valve stem (C) from the wheel.

   NOTE: Check the nut and the washer, if they have deterioration or damage, replace them with new ones during reassembly.

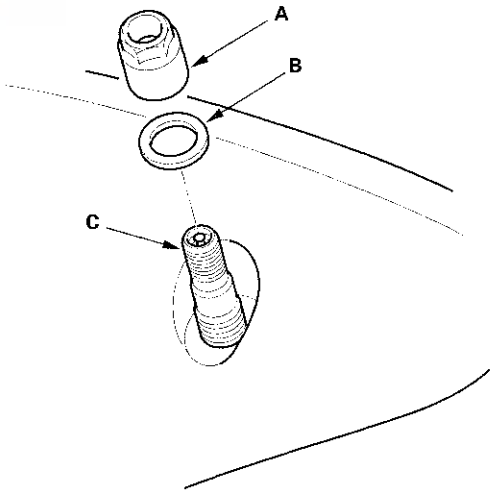

7. Remove and replace the valve stem grommet (A) from the tire pressure sensor (B).

   NOTE:
   - The valve stem grommet might stay in the wheel; make sure you remove it.
   - Always use a new valve stem grommet whenever the tire pressure sensor has been removed from the wheel, or when replacing the tire.

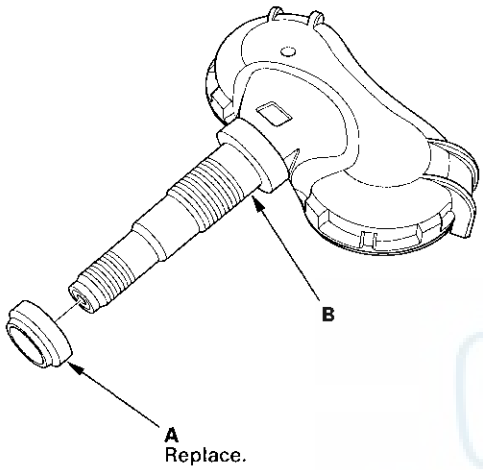

Installation

NOTE: Use only wheels that have a "TPMS" stamp (A) on them.

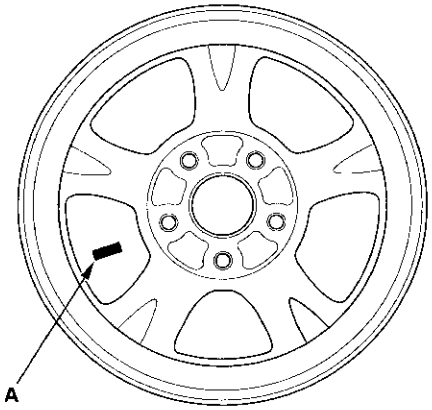

(cont'd)

Tire Pressure Sensor Replacement (cont'd)

1. Before installing the tire pressure sensor, clean the mating surfaces on the sensor and the wheel.

2. Install the tire pressure sensor (A) and the washer (B) to the wheel (C), and tighten the valve stem nut (D) finger tight. Make sure the pressure sensor is resting on the wheel.

   NOTE: Install the tire pressure sensor so that sensor housing surface (E) should not exceed protrusion (F) of wheel to prevent the sensor housing from being caught onto the bead of the tire when assembling the tire.

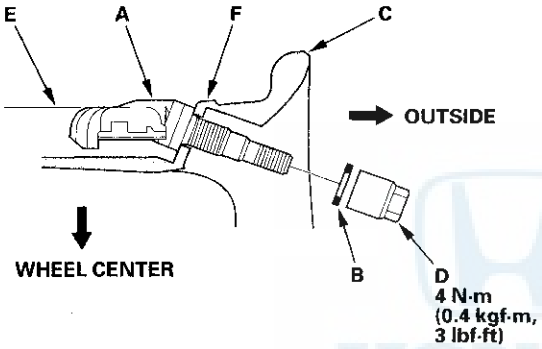

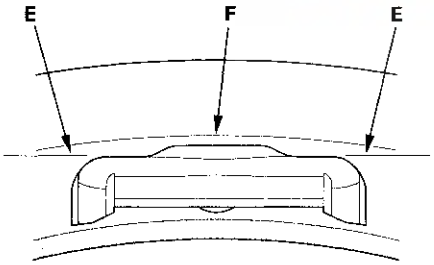

3. Tighten the valve stem nut to the specified torque while holding the tire pressure sensor.

   NOTE:
   - Do not use air or electric impact tools to tighten a valve stem nut.
   - Do not twist the tire pressure sensor to adjust its position with the wheel, as this will damage or deform the valve stem grommet.

4. Lube the tire bead sparingly with a paste-type tire mounting lubricant, and position the wheel so the tire machine (A) and tire iron (B) are next to the valve stem (C) and will move away from it when the machine starts. Then install the tire onto the wheel.

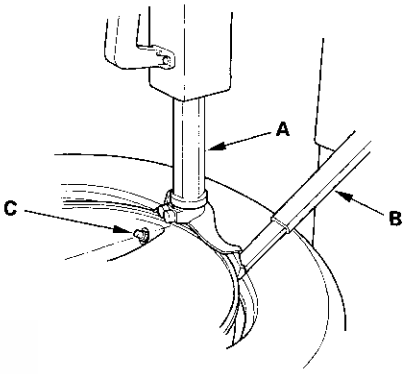

5. With a dry air source, inflate the tire to 300 kPa (3.1 kgf/cm^2, 44 psi) to seat the tire bead to the rim, then adjust the tire pressure (see page 18-6), then install the valve stem cap.

   NOTE: Make sure the tire bead is seated on both sides of the rim uniformly.

6. Check and adjust the wheel balance, then install the wheels on the vehicle.

7. Remove the jack stands, and lower the vehicle. Torque the wheel nuts to specification.

8. Connect the HDS, and memorize the pressure sensor IDs using the TPMS sensor initializer tool (see page 18-56).

INTEGRATED MOTOR ASSIST (IMA) (If brake maintenance is required)

IMA components are located in this area. The IMA is a high-voltage system. The high voltage cables and their covers are identified by orange coloring. The safety labels are attached to high voltage and other related parts (see page 1-7). You must be familiar with the IMA system before working around it. Make sure you have read the Service Precautions in the IMA section before performing repairs or service (see page 12-3).

Brakes

Conventional Brake Components

Special Tools 19-2
Component Location Index 19-3
Brake System Inspection and Test 19-4
Symptom Troubleshooting 19-5
Brake Pedal and Brake Pedal Position Switch Adjustment 19-6
Parking Brake Inspection and Adjustment 19-7
Brake System Indicator Circuit Diagram 19-10
Parking Brake Switch Test 19-11
Brake Fluid Level Switch Test 19-11
Front Brake Pad Inspection and Replacement 19-12
Front Brake Disc Inspection 19-16
Front Brake Disc Replacement 19-18
Front Brake Caliper Overhaul 19-19
Rear Brake Pad Inspection and Replacement 19-20
Rear Brake Disc Inspection 19-23
Rear Brake Disc Replacement 19-25
Rear Brake Caliper Overhaul 19-26
Rear Drum Brake Inspection 19-27
Rear Brake Drum Replacement 19-29
Rear Brake Shoe Replacement 19-30
Rear Wheel Cylinder Replacement 19-33
Brake Hose and Line Inspection 19-34
Brake Hose Replacement 19-35
Parking Brake Cable Replacement 19-37
Parking Brake Lever Grip and Cover Replacement 19-39

Advanced Hydraulic Booster 19-43

ABS (Anti-lock Brake System) Components ('06-09 Models) 19-111

VSA (Vehicle Stability Assist) System Components ('09 Model) 19-159

Conventional Brake Components

Special Tools

Ref. No.	Tool Number	Description	Qty
①	07AAE-SEPA101	Brake Caliper Piston Compressor	1
②	07LAF-SM40200	Brake Spring Installer	1
③	07AAG-SVBA100	Guide Pin Tool	1

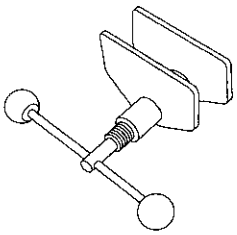

①

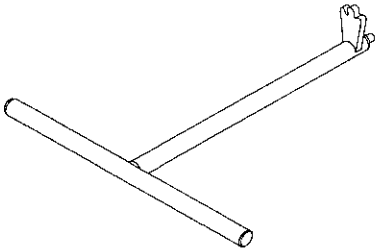

②

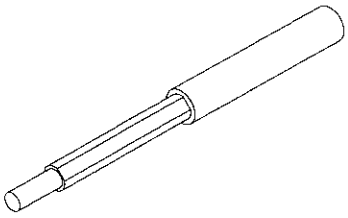

③

Component Location Index

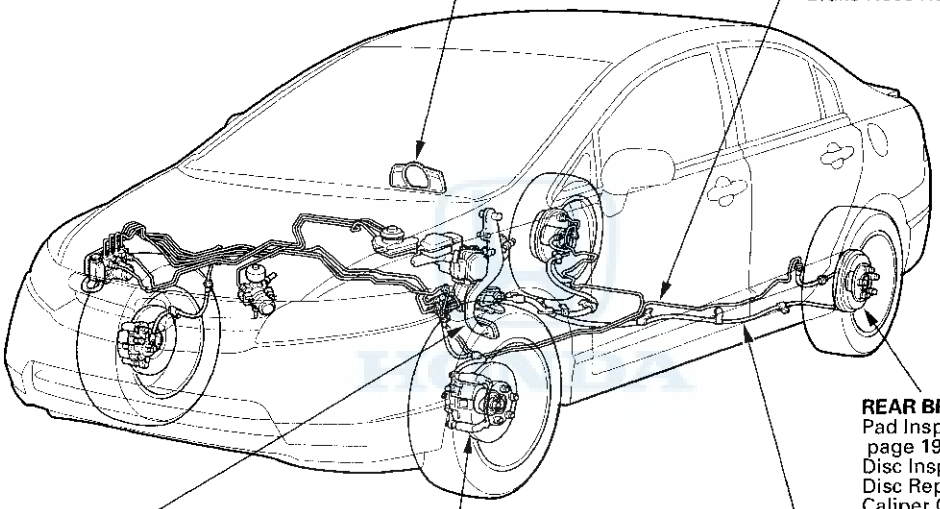

BRAKE SYSTEM INDICATOR
Circuit Diagram, page 19-10
Parking Brake Switch Test, page 19-11
Brake Fluid Level Switch Test, page 19-11

BRAKE HOSE and LINE
Inspection, page 19-34
Brake Hose Replacement, page 19-35

REAR BRAKE
Pad Inspection and Replacement, page 19-20
Disc Inspection, page 19-23
Disc Replacement, page 19-25
Caliper Overhaul, page 19-26
Drum Brake Inspection, page 19-27
Drum Replacement, page 19-29
Shoe Replacement, page 19-30
Rear Wheel Cylinder Replacement, page 19-33

BRAKE PEDAL
Brake Pedal and Brake Pedal Position Switch Adjustment, page 19-6

FRONT BRAKE
Pad Inspection and Replacement, page 19-12
Disc Inspection, page 19-16
Disc Replacement, page 19-18
Caliper Overhaul, page 19-19

PARKING BRAKE
Inspection and Adjustment, page 19-7
Cable Replacement, page 19-37
Lever Grip and Cover Replacement, page 19-39

Conventional Brake Components

Brake System Inspection and Test

Inspect the brake system components listed. Repair or replace any parts that are leaking or damaged.

Component Inspections:

Component	Procedure	Also check for
Master Cylinder	Look for damage or signs of fluid leakage at: • Reservoir tank, subreservoir or master cylinder body. • Lines, reservoir tank hose and grommets, and their joints. • Between master cylinder and booster.	Bulging seal at reservoir cap. This is a sign of fluid contamination.
Brake Hoses	Look for damage or signs of fluid leakage at: • Line joints and banjo bolt connections. • Hoses and lines, also inspect for twisting or damage.	Bulging, twisted, or bent lines.
Caliper	Look for damage or signs of fluid leakage at: • Piston seal. • Banjo bolt connections. • Bleed screw.	Seized or sticking caliper pins.
Wheel Cylinder	Look for damage or signs of fluid leakage at: • Wheel cylinder. • Line joints. • Bleed screw.	
ABS or VSA Modulator-control Unit	Look for damage or signs of fluid leakage at: • Line joints. • Modulator-control unit.	

Brake System Test

Brake pedal sinks/fades when braking

1. Turn the ignition switch to LOCK (0).
2. Press the brake pedal several times until there is a hard brake pedal.
3. Attach a 50 mm (2 in.) piece of masking tape along the bottom of the steering wheel, and draw a horizontal reference mark across it.
4. Holding the brake pedal, with about 98 N (10 kgf, 22 lbf), hook the end of the tape measure behind the brake pedal, then pull the tape up to the steering wheel. Note the measurement between the brake pedal and reference mark on the steering wheel.
5. Apply steady pressure to the brake pedal for 3 minutes.
6. Watch the tape measure.
   - If the measurement increases 10 mm (3/8 in.) or less, the master cylinder is OK.
   - If the measurement increases more than 10 mm (3/8 in.), check the advanced hydraulic booster system (see page 19-45).

Rapid brake pad wear, vehicle vibration (after a long drive), or high, hard brake pedal

NOTICE
If the brake system indicator is on with the buzzer sounding, do not drive the vehicle. Check the advanced hydraulic booster system (see page 19-45).

NOTE: Make sure that the caliper pins are installed correctly.
Upper caliper pin B and lower caliper pin A are different. If the pins are installed in the wrong location, it will cause vibration, uneven and rapid pad wear, and possibly uneven tire wear. For proper caliper pin location (see page 19-19).

1. Check the advanced hydraulic booster system (see page 19-45). Make sure the indicators are not turned on.

2. Drive the vehicle until the brakes drag or until the pedal is high and hard. This can take 20 or more brake pedal applications during an extended test-drive.

3. With the engine running, raise the vehicle on a lift, and spin all four wheels by hand.

   Is there brake drag at any of the wheels?

   YES—Go to step 4.

   NO—Look for other causes of pad wear, high pedal, or vehicle vibration.■

4. Turn the ignition switch to LOCK (0), press the brake pedal to deplete the advanced hydraulic booster system, then spin the wheels again to check for brake drag.

   Is there brake drag at any of the wheels?

   YES—Go to step 5.

   NO—Replace the servo unit (see page 19-100).■

5. Remove the brake pedal position switch, then spin the wheels to check for brake drag.

   Is there brake drag at any of the wheels?

   YES—Go to step 6.

   NO—Check the brake pedal position switch adjustment and pedal free play (see page 19-6).■

6. Loosen the hydraulic lines at the master cylinder, then spin the wheels to check for brake drag.

   Is there brake drag at any of the wheels?

   YES—Go to step 7.

   NO—Check the master cylinder reservoir for contamination in the brake fluid. If you find contamination, flush the entire brake system of all contaminated fluid. If the brake fluid is OK, replace the master cylinder (see page 19-100).■

7. Loosen the bleed screws at each caliper or wheel cylinder, then spin the wheels to check for brake drag.

   Is there brake drag at any of the wheels?

   YES—Check the master cylinder reservoir for contamination in the brake fluid. If you find contamination, flush the entire brake system of all contaminated fluid. If the brake fluid is OK, disassemble and repair the caliper or wheel cylinder on the wheel(s) experiencing brake drag.■

   NO—Look for and replace any damaged brake lines. If all brake lines are OK, replace the ABS or VSA modulator-control unit: ABS (see page 19-154), VSA (see page 19-236).■

Brake Pedal and Brake Pedal Position Switch Adjustment

Pedal Height

1. Turn the brake pedal position switch (A) counterclockwise, and pull it back until it is no longer touching the brake pedal.

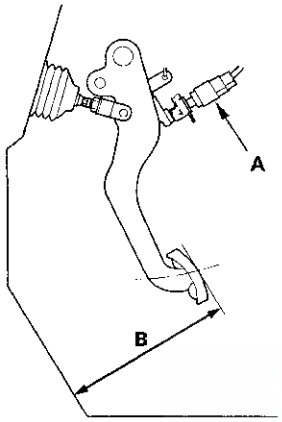

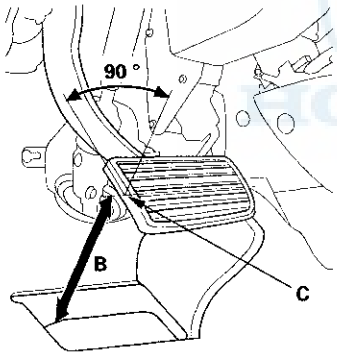

2. Pull back the carpet, and find the cutout in the insulation. Lift up the insulation cutout and measure the pedal height (B) at the middle of the left side center of the pedal pad (C) to the floor without the insulation.

   Standard pedal height (with carpet removed): 158 mm (6 1/4 in.)

3. Loosen the pushrod locknut (A), and screw the pushrod (B) in or out with pliers until the standard pedal height from the floor is reached. After adjustment, tighten the locknut firmly. Do not adjust the pedal height with the pushrod pressed.

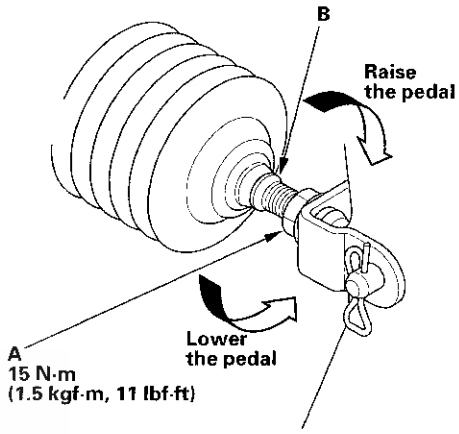

Brake Pedal Position Switch Clearance

4. Lift up on the brake pedal by hand. Push in the brake pedal position switch until its plunger is fully pressed (threaded end (A) touching the pad (B) on the pedal arm). Turn the switch 45 ° clockwise to lock it. The gap between the brake pedal position switch and the pad is automatically adjusted to 0.7 mm (0.028 in.) by locking the switch. Make sure the brake lights go off when the pedal is released.

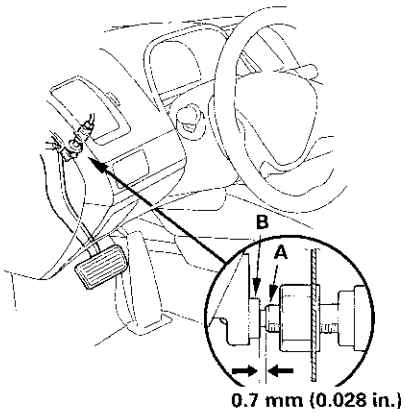

5. Check the brake pedal free play.

6. Do the sensor 0 (zero) position memorization (see page 19-48).

Pedal Free Play

1. With the ignition switch in LOCK (0), inspect the play (A) at the pedal pad (B) by pushing the pedal by hand. If the brake pedal free play is out of specification, adjust the brake pedal position switch (C). If the brake pedal free play is insufficient, it may result in brake drag.

   Free play: 1—5 mm (1/16—3/16 in.)

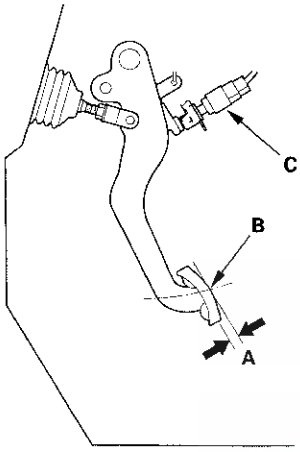

Parking Brake Inspection and Adjustment

Inspection

1. Pull the parking brake lever (A) with 196 N (20 kgf, 44 lbf) of force to fully apply the parking brake. The parking brake lever should be locked within the specified number of clicks.

   Lever locked clicks: 8 to 10

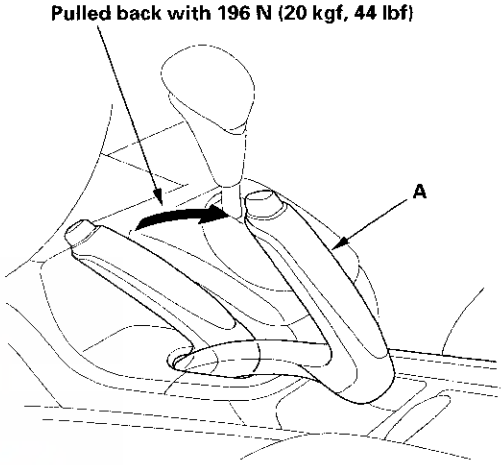

2. If the number of lever clicks is not as specified, adjust the parking brake.

(cont'd)

Parking Brake Inspection and Adjustment (cont'd)

Adjustment - Rear Disc Brake Type

1. Remove the center console panel (see page 20-79).
2. Release the parking brake lever fully.
3. Loosen the parking brake adjusting nut (A).

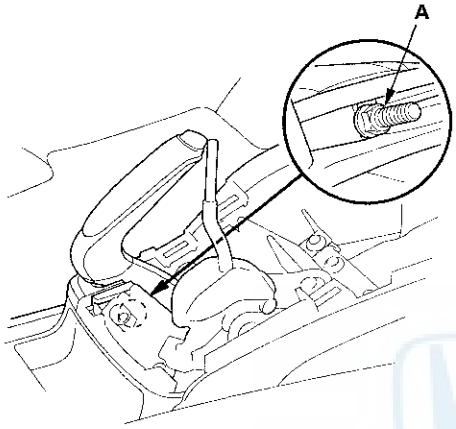

4. Raise the rear of the vehicle, and support it with safety stands in the proper locations (see page 1-10).
5. Remove the rear wheels.
6. Make sure the lever (A) on the rear brake caliper contacts the stop pin (B).

   NOTE: The lever will only contact the stop pin when the parking brake adjusting nut is loosened.

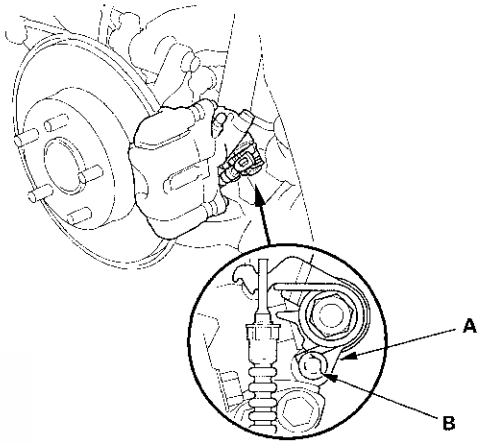

7. Clean the mating surfaces between the brake disc and the inside of the wheel, then install the rear wheels.

8. Pull the parking brake lever 1 click.

9. Tighten the parking brake adjusting nut until the parking brakes drag slightly when the rear wheels are turned.

10. Release the parking brake lever fully, and check that the parking brakes do not drag when the rear wheels are turned. Readjust if necessary.

11. Make sure the parking brake lever is within the specified number of clicks (8 to 10 clicks).

12. Install the center console panel (see page 20-79).

Adjustment - Rear Drum Brake Type

1. Remove the center console panel (see page 20-79).

2. Release the parking brake lever fully.

3. Loosen the parking brake adjusting nut (A).

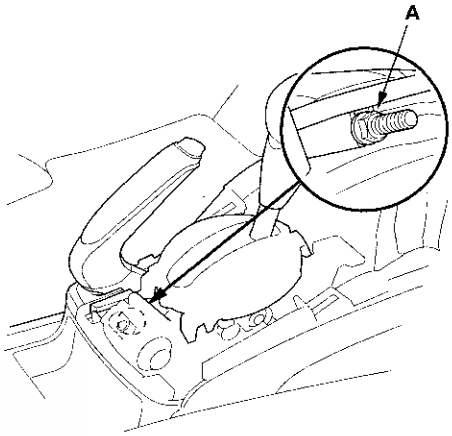

4. Press the brake pedal several times to set the self-adjusting brake before adjusting the parking brake.

5. Pull the parking brake lever 1 click.

6. Raise the rear of the vehicle, and support it with safety stands in the proper locations (see page 1-10).

7. Tighten the parking brake adjusting nut until the parking brakes drag slightly when the rear wheels are turned.

8. Release the parking brake lever fully, and check that the parking brakes do not drag when the rear wheels are turned. Readjust if necessary.

9. Make sure the parking brake lever is within the specified number of clicks (8 to 10 clicks).

10. Install the center console panel (see page 20-79).

Brake System Indicator Circuit Diagram

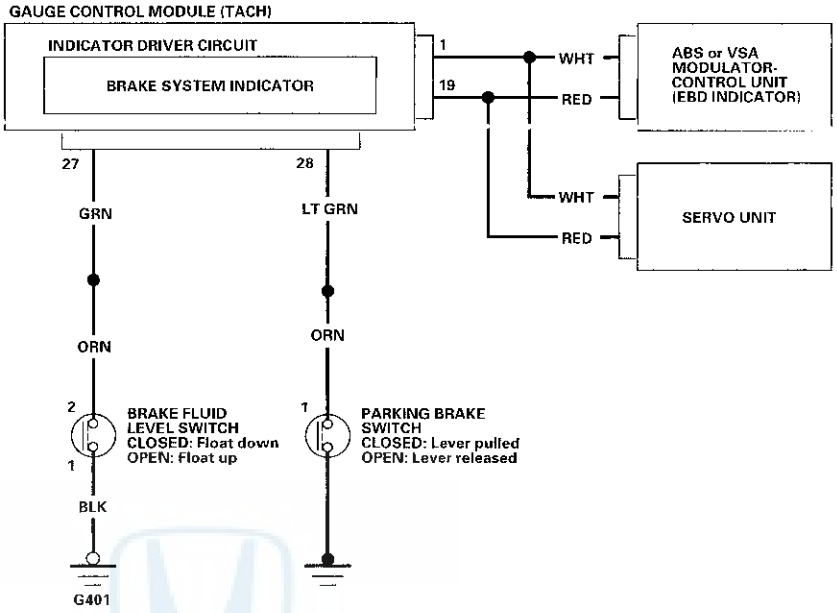

Parking Brake Switch Test

NOTE: If the ABS indicator or the AHB indicator, and the brake system indicator come on at the same time, check the advanced hydraulic booster system for DTC's first (see page 19-45), then check the ABS or VSA: ABS (see page 19-154), VSA (see page 19-236).

1. Remove the center console (see page 20-79).

2. Disconnect the parking brake switch connector (A) from the parking brake switch (B).

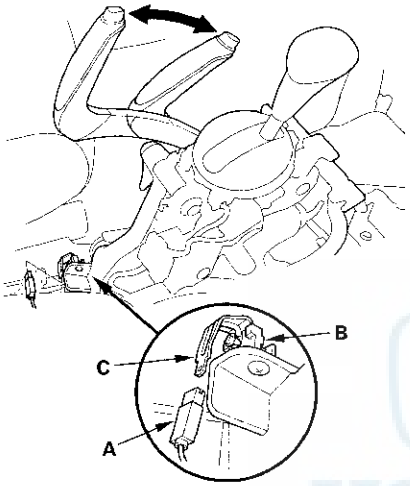

3. Check for continuity between the switch terminal (C) and body ground.

   - With the parking brake lever pulled, there should be continuity.
   - With the parking brake lever released, there should be no continuity.

   NOTE: If the parking brake switch and the fluid level switches are OK, but the brake system indicator does not function, do the gauge control module self-diagnostic function (see page 22-223).

4. Reconnect the parking brake switch connector.

5. Reinstall the center console (see page 20-79).

Brake Fluid Level Switch Test

1. Disconnect the brake fluid level switch connector.

2. Check for continuity between the terminals (1) and (2) with the float in the down position and in the up position.

   NOTE:
   - Remove the brake fluid completely from the subreservoir. With the float down, there should be continuity.
   - Fill the subreservoir with brake fluid to the MAX (upper) level (A). With the float up, there should be no continuity.
   - If the ABS indicator or the AHB indicator, and the brake system indicator come on at the same time, check the advanced hydraulic booster system for DTC's first (see page 19-45), then check the ABS or VSA: ABS (see page 19-154), VSA (see page 19-236).
   - If the parking brake switch and the fluid level switches are OK, but the brake system indicator does not function, do the gauge control module self-diagnostic function (see page 22-223).

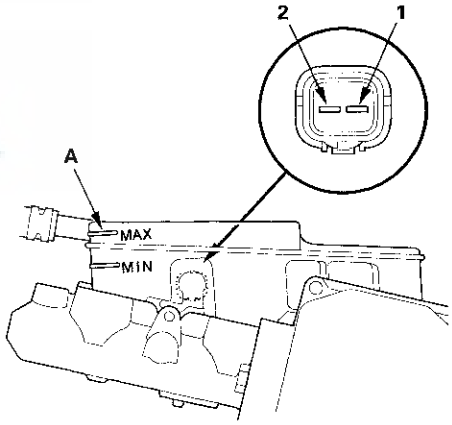

3. Reconnect the brake fluid level switch connector.

Front Brake Pad Inspection and Replacement

Special Tools Required
Brake caliper piston compressor 07AAE-SEPA101

⚠CAUTION

Frequent inhalation of brake pad dust, regardless of material composition, could be hazardous to your health.
- Avoid breathing dust particles.
- Never use an air hose or brush to clean brake assemblies. Use an OSHA-approved vacuum cleaner.

Inspection

1. Raise the front of the vehicle, and support it with safety stands in the proper locations (see page 1-10).

2. Remove the front wheels.

3. Check the thickness (A) of the inner pad (B) and the outer pad (C). Do not include the thickness of the backing plate.

   Brake pad thickness:
   Standard: 9.5—10.5 mm (0.37—0.41 in.)
   Service limit: 1.6 mm (0.06 in.)

   Inner pad

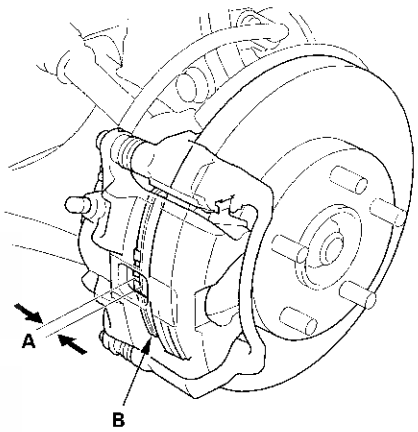

   Outer pad

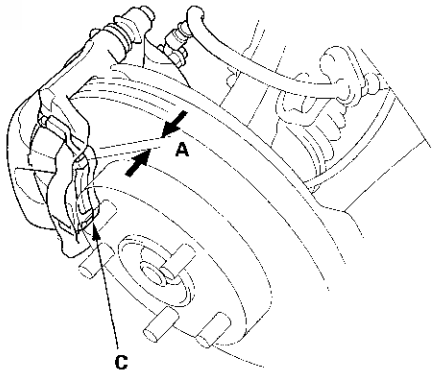

4. If any part of the brake pad thickness is less than the service limit, replace the front brake pads as a set.

5. Clean the mating surfaces between the brake disc and the inside of the wheel, then install the front wheels.

Replacement

1. Remove some of the brake fluid from the master cylinder.

2. Raise the front of the vehicle, and support it with safety stands in the proper locations (see page 1-10).

3. Remove the front wheels.

4. Remove the flange bolt (A) while holding the caliper pin (B) with a wrench. Be careful not to damage the pin boot, and pivot the caliper (C) up out of the way. Check the hose and pin boots for damage and deterioration.

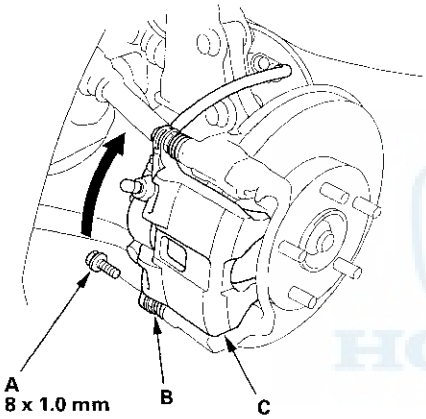

5. Remove the pad return springs (A).

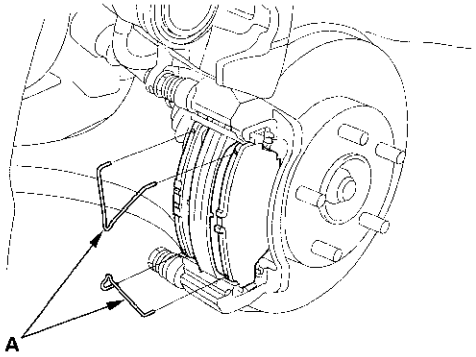

6. Remove the pad shims (A) and the brake pads (B).

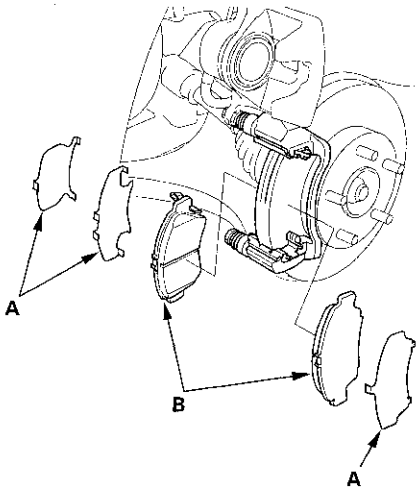

7. Remove the pad retainers (A).

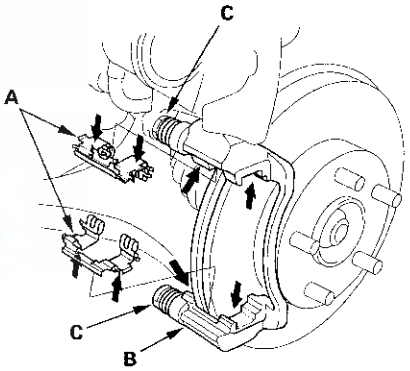

8. Clean the caliper bracket (B) thoroughly; remove any rust, and check for grooves and cracks. Verify that the caliper pins (C) move in and out smoothly. Clean and lube the pins if needed.

9. Inspect the brake disc for runout, thickness, parallelism (see page 19-16), and check for damage and cracks.

10. Apply a thin coat of M-77 assembly paste (P/N 08798-9010) to the retainer mating surface of the caliper bracket (indicated by the arrows).

11. Install the pad retainers. Wipe excess assembly paste off the retainers. Keep the assembly paste off the brake disc and the brake pads.

(cont'd)

Front Brake Pad Inspection and Replacement (cont'd)

12. Install the brake caliper piston compressor tool (A) on the caliper body (B).

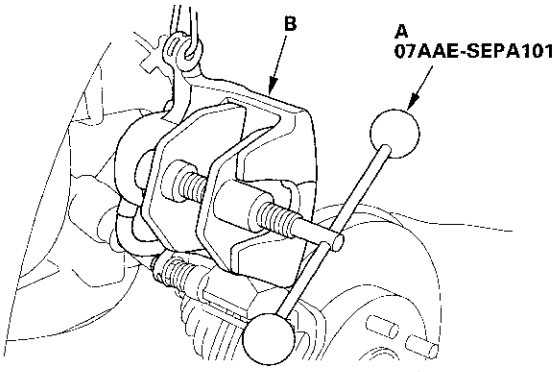

13. Press in the piston with the brake caliper piston compressor tool so the caliper will fit over the brake pads. Make sure the piston boot is in position to prevent damaging it when pivoting the caliper down.

    NOTE: Be careful when pressing in the piston; brake fluid might overflow from the master cylinder's reservoir. If brake fluid gets on any painted surface, wash it off immediately with water.

14. Remove the brake caliper piston compressor tool.

15. Apply a thin coat of M-77 assembly paste (P/N 08798-9010) to the pad side of the shims (A), the back of the brake pads (B), and the other areas indicated by the arrows. Wipe excess assembly paste off the pad shims and the brake pads friction material. Keep grease and assembly paste off the brake disc and the brake pads. Contaminated brake disc or brake pads reduce stopping ability.

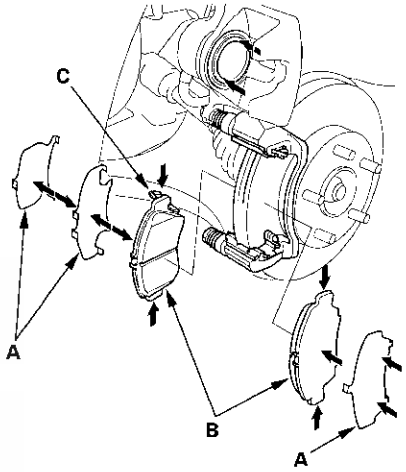

16. Install the brake pads and the pad shims correctly. Install the brake pad with the wear indicator (C) on the upper inside. If you are reusing the brake pads, always reinstall the brake pads in their original positions to prevent a momentary loss of braking efficiency.

17. Install the pad return springs (A).

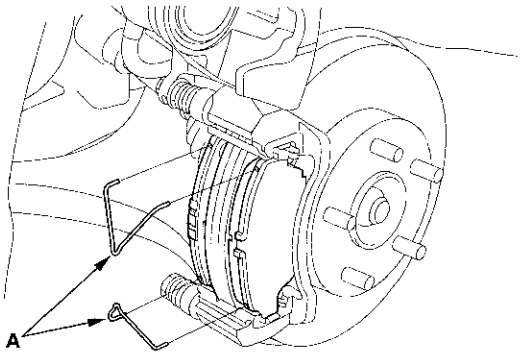

18. Pivot the caliper down into position. Install the flange bolt (A), and tighten it to the specified torque while holding the caliper pin (B) with a wrench. Be careful not to damage the pin boot.

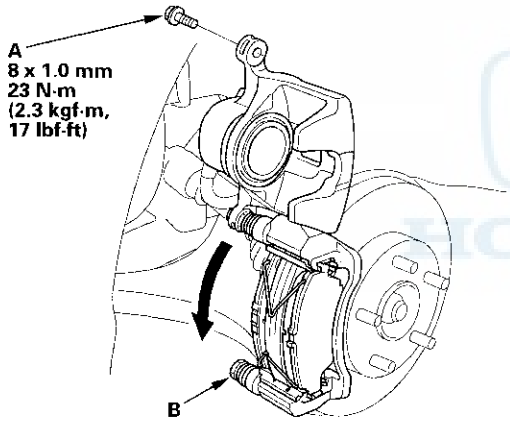

19. Clean the mating surfaces between the brake disc and the inside of the wheel, then install the front wheels.

20. Press the brake pedal several times to make sure the brakes work.

    NOTE: Engagement may require a greater pedal stroke immediately after the brake pads have been replaced as a set. Several applications of the brake pedal will restore the normal pedal stroke.

21. Add brake fluid as needed.

22. After installation, check for leaks at hose and line joints or connections, and retighten if necessary. Test-drive the vehicle, then recheck for leaks (see page 19-34).

Front Brake Disc Inspection

Runout

1. Raise the front of the vehicle, and support it with safety stands in the proper locations (see page 1-10).

2. Remove the front wheels.

3. Remove the brake pads (see page 19-13).

4. Inspect the brake disc to wheel surface for damage and cracks. Clean the brake disc thoroughly, and remove all rust.

5. Install suitable flat washers (A) and wheel nuts (B), and tighten the wheel nuts to the specified torque to hold the brake disc securely against the hub.

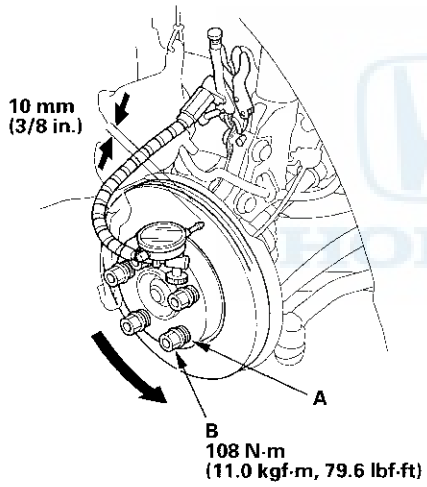

6. Set up the dial gauge against the brake disc as shown, and measure the runout at 10 mm (3/8 in.) from the outer edge of the brake disc.

   Brake disc runout:
   Service limit: 0.04 mm (0.0016 in.)

7. If the brake disc is beyond the service limit, refinish the brake disc with a Honda-approved commercially available on-car brake lathe.

   Max. refinishing limit: 19.0 mm (0.75 in.)

   NOTE:
   - If the brake disc is beyond the service limit for refinishing, replace it (see page 19-18).
   - If the brake disc is replaced with a new one, check the new disc for runout. If the new disc is out of specification, refinish the disc.

8. Install the brake pads (see page 19-13).

9. Clean the mating surfaces between the brake disc and the inside of the wheel, then install the front wheels.

Thickness and Parallelism

1. Raise the front of the vehicle, and support it with safety stands in the proper locations (see page 1-10).

2. Remove the front wheels.

3. Remove the brake pads (see page 19-13).

4. Using a micrometer, measure the brake disc thickness at eight points, about 45 ° apart and 10 mm (3/8 in.) in from the outer edge of the brake disc. Replace the brake disc if the smallest measurement is less than the maximum refinishing limit.

   Brake disc thickness:
   Standard: 20.9—21.1 mm (0.82—0.83 in.)
   Max. refinishing limit: 19.0 mm (0.75 in.)
   Brake disc parallelism: 0.015 mm (0.0006 in.) max.

   NOTE: This is the maximum allowable difference between the thickness measurements.

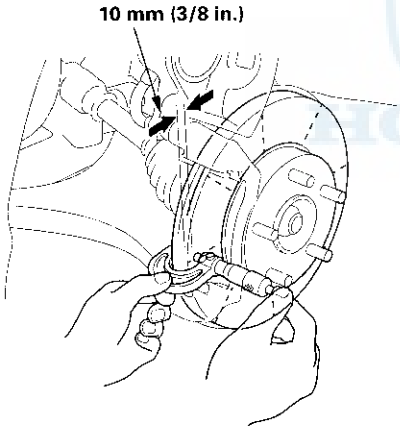

5. If the brake disc is beyond the service limit for parallelism, refinish the brake disc with a Honda-approved commercially available on-car brake lathe.

   NOTE: If the brake disc is beyond the service limit for refinishing, replace it (see page 19-18).

6. Install the brake pads (see page 19-13).

7. Clean the mating surfaces between the brake disc and the inside of the wheel, then install the front wheels.

Front Brake Disc Replacement

NOTE: Keep any grease off the brake disc and brake pads.

1. Raise the front of the vehicle, and support it with safety stands in the proper locations (see page 1-10).

2. Remove the front wheel.

3. Remove the brake hose mounting bolt (A) from the damper.

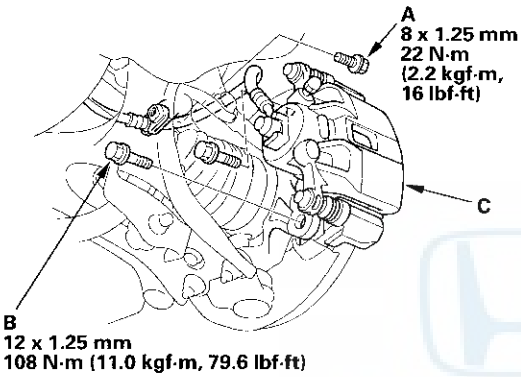

4. Remove the brake caliper bracket mounting bolts (B), and remove the caliper assembly (C) from the knuckle. To prevent damage to the caliper assembly or brake hose, use a short piece of wire to hang the caliper assembly from the undercarriage. Do not twist the brake hose excessively.

5. Remove the brake disc flathead screws (A).

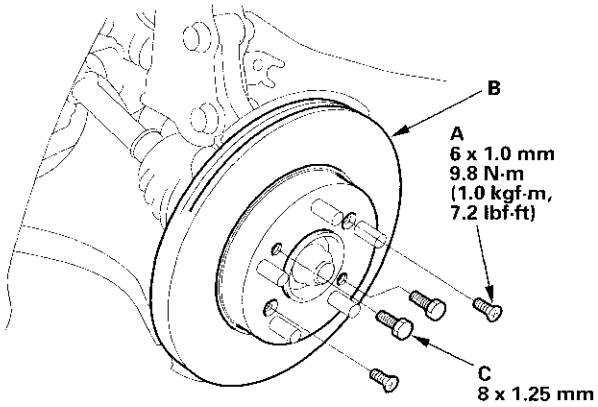

6. Remove the brake disc (B) from the front hub.

   NOTE: If the brake disc is stuck to the front hub, thread two 8 x 1.25 mm bolts (C) into the brake disc to push it away from the front hub. Turn each bolt 90 degrees at a time to prevent the brake disc from binding.

7. Install the brake disc in the reverse order of removal.

   NOTE: Before installing the brake disc, clean the mating surfaces between the front hub and the inside of the brake disc.

8. Inspect the brake disc runout (see page 19-16).

9. Clean the mating surfaces between the brake disc and the inside of the wheel, then install the front wheel.

Front Brake Caliper Overhaul

⚠CAUTION

Frequent inhalation of brake pad dust, regardless of material composition, could be hazardous to your health.
- Avoid breathing dust particles.
- Never use an air hose or brush to clean brake assemblies. Use an OSHA-approved vacuum cleaner.

Remove, disassemble, inspect, reassemble, and install the caliper, and note these items:

NOTE: Make sure that the caliper pins are installed correctly. Upper caliper pin B and lower caliper pin A are different. If these caliper pins are installed in the wrong location, it will cause vibration, uneven or rapid brake pad wear, and possibly uneven tire wear.

- Do not spill brake fluid on the vehicle; it may damage the paint; if brake fluid gets on the paint, wash it off immediately with water.
- To prevent dripping brake fluid, cover disconnected hose joints with rags or shop towels.
- Clean all parts in brake fluid and air dry; blow out all passages with compressed air.
- Before reassembling, check that all parts are free of dirt and other foreign particles.
- Replace parts with new ones as specified in the illustration.
- Make sure no dirt or other foreign matter gets in the brake fluid.
- Make sure no grease or oil gets on the brake discs or pads.
- When reusing brake pads, always reinstall them in their original positions to prevent loss of braking efficiency.
- Do not reuse drained brake fluid. Use only clean Honda DOT 3 Brake Fluid from an unopened container. Using a non-Honda brake fluid can cause corrosion and shorten the life of the system.
- Coat the piston, the piston seal groove, and the caliper bore with clean brake fluid.
- Use recommended greases in the front caliper set.
- After installing the caliper, check the brake hose and line for leaks, interference, and twisting.

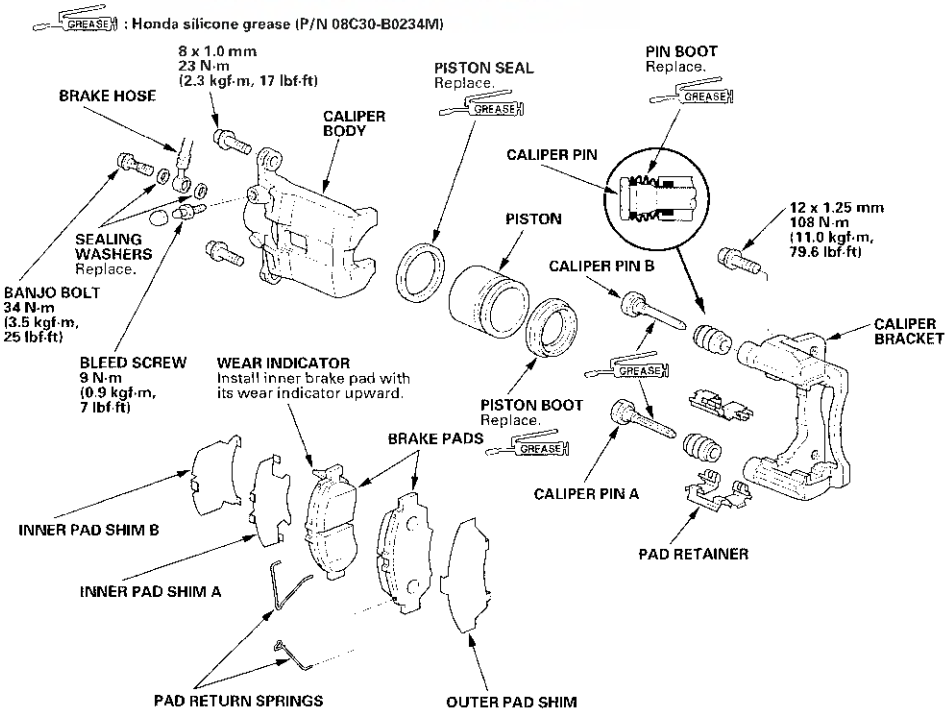

Rear Brake Pad Inspection and Replacement

⚠CAUTION

Frequent inhalation of brake pad dust, regardless of material composition, could be hazardous to your health.
- Avoid breathing dust particles.
- Never use an air hose or brush to clean brake assemblies. Use an OSHA-approved vacuum cleaner.

Inspection

1. Raise the rear of the vehicle, and support it with safety stands in the proper locations (see page 1-10).
2. Remove the rear wheels.
3. Check the thickness (A) of the inner pad (B) and the outer pad (C). Do not include the thickness of the backing plate.

   Brake pad thickness:
   Standard: 8.3—9.4 mm (0.33—0.37 in.)
   Service limit: 1.6 mm (0.06 in.)

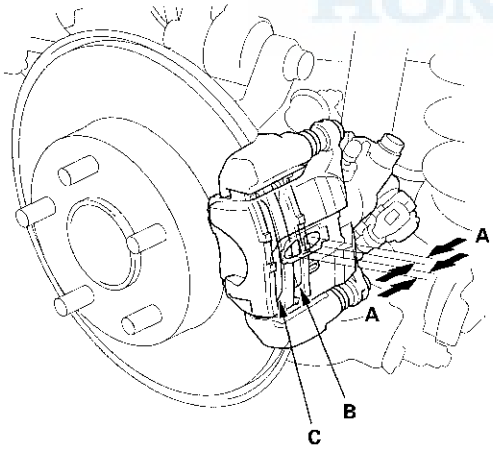

4. If any part of the brake pad thickness is less than the service limit, replace the rear brake pads as a set.
5. Clean the mating surfaces between the brake disc and the inside of the wheel, then install the rear wheels.

Replacement

1. Remove some brake fluid from the master cylinder.
2. Raise the rear of the vehicle, and support it with safety stands in the proper locations (see page 1-10).
3. Remove the rear wheels.
4. Remove the brake hose mounting bolt (A).

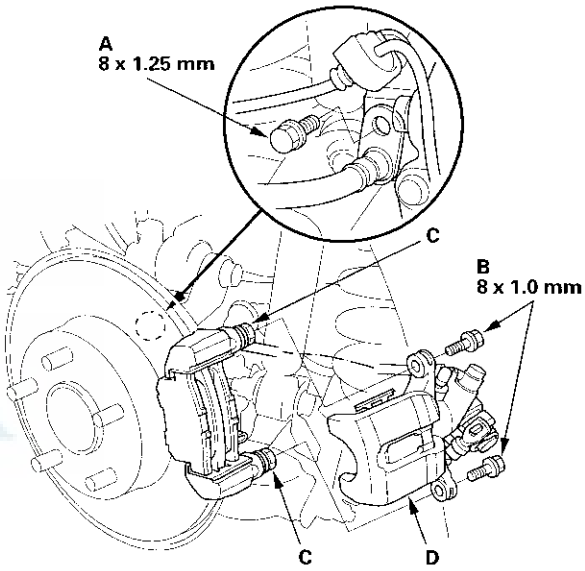

5. Remove the flange bolts (B) while holding respective caliper pin (C) with a wrench. Be careful not to damage the pin boot, and remove the caliper (D). Check the hose and pin boots for damage and deterioration.

   NOTE: Do not twist the brake hose and the parking brake cable to prevent damage.

6. Remove the pad shims (A) and the brake pads (B).

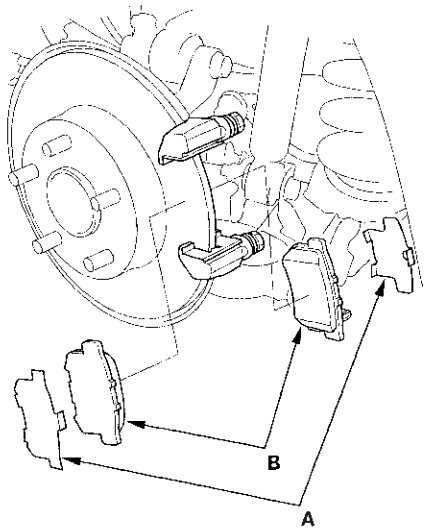

7. Remove the pad retainers (A).

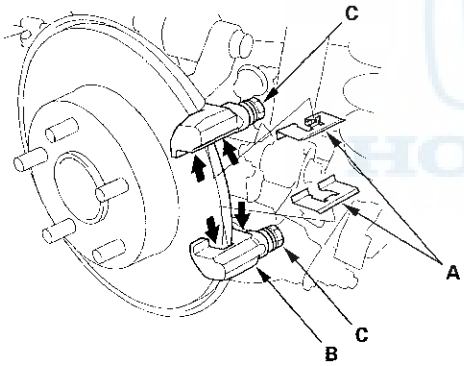

8. Clean the caliper bracket (B) thoroughly; remove any rust, and check for grooves and cracks. Verify that the caliper pins (C) move in and out smoothly. Clean and lube if needed.

9. Inspect the brake disc for runout, thickness, parallelism (see page 19-23) and check for damage and cracks.

10. Apply a thin coat of M-77 assembly paste (P/N 08798-9010) to the retainer mating surface of the caliper bracket (indicated by the arrows).

11. Install the pad retainers. Wipe excess assembly paste off the retainers. Keep the assembly paste off the brake disc and brake pads.

12. Apply a thin coat of M-77 assembly paste (P/N 08798-9010) to the pad side of the shims (A), the back of the brake pads (B), and the other areas indicated by the arrows. Wipe excess assembly paste off the pad shims and the brake pads friction material. Keep grease and assembly paste off the brake disc and the brake pads. Contaminated brake disc or brake pads reduce stopping ability.

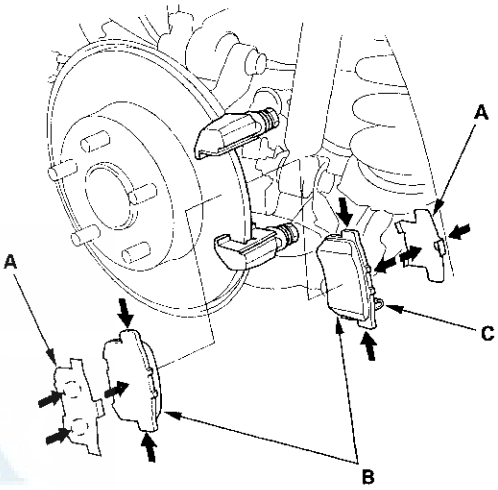

13. Install the brake pads and the pad shims correctly. Install the brake pad with the wear indicator (C) on the bottom inside. If you are reusing the brake pads, always reinstall the brake pads in their original positions to prevent a momentary loss of braking efficiency.

(cont'd)

Rear Brake Pad Inspection and Replacement (cont'd)

14. Rotate the caliper piston (A) clockwise into the cylinder, then align the cutout (B) in the piston with the tab (C) on the inner pad by turning the piston back. Lubricate the boot with rubber grease to avoid twisting the piston boot. If the piston boot is twisted, back it out so it is positioned properly.

    NOTE: Be careful when moving the piston back in the caliper; brake fluid might overflow from the master cylinder's reservoir. If brake fluid gets on any painted surface, wash it off immediately with water.

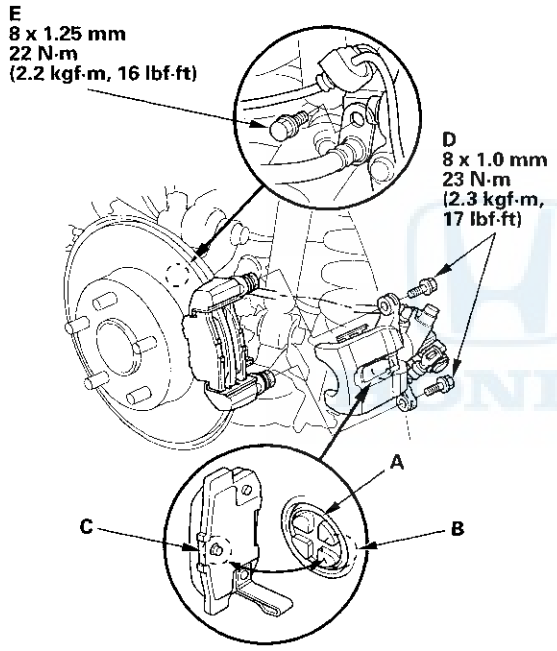

15. Install the caliper. Install the flange bolts (D), and tighten it to the specified torque while holding the respective caliper pin with a wrench being careful not to damage the pin boots.

16. Install the brake hose mounting bolt (E).

17. Clean the mating surfaces between the brake disc and the inside of the wheel, then install the rear wheels.

18. Press the brake pedal several times to make sure the brakes work.

    NOTE: Engagement may require a greater pedal stroke immediately after the brake pads have been replaced as a set. Several applications of the brake pedal will restore the normal pedal stroke.

19. Add brake fluid as needed.

20. After installation, check for leaks at hose and line joints or connections, and retighten if necessary. Test-drive the vehicle, then recheck for leaks (see page 19-34).

Rear Brake Disc Inspection

Runout

1. Raise the rear of the vehicle, and support it with safety stands in the proper locations (see page 1-10).

2. Remove the rear wheels.

3. Remove the brake pads (see page 19-20).

4. Inspect the brake disc to wheel surface for damage and cracks. Clean the brake disc thoroughly, and remove all rust.

5. Install suitable flat washers (A) and wheel nuts (B), and tighten the wheel nuts to the specified torque to hold the brake disc securely against the hub.

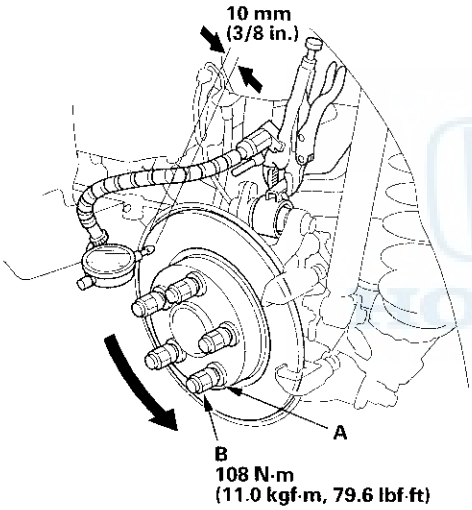

6. Set up the dial gauge against the brake disc as shown, and measure the runout at 10 mm (3/8 in.) from the outer edge of the brake disc.

   Brake disc runout:
   Service limit: 0.04 mm (0.0016 in.)

7. If the brake disc is beyond the service limit, refinish the brake disc with a Honda-approved commercially available on-car brake lathe.

   Max. refinishing limit: 8.0 mm (0.31 in.)

   NOTE:
   - If the brake disc is beyond the service limit for refinishing, replace it (see page 19-25).
   - If the brake disc is replaced with a new one, check the new disc for runout. If the new disc is out of specification, refinish the disc.

8. Install the brake pads (see page 19-20).

9. Clean the mating surfaces between the brake disc and the inside of the wheel, then install the rear wheels.

(cont'd)

Rear Brake Disc Inspection (cont'd)

Thickness and Parallelism

1. Raise the rear of the vehicle, and support it with safety stands in the proper locations (see page 1-10).

2. Remove the rear wheels.

3. Remove the brake pads (see page 19-20).

4. Using a micrometer, measure the brake disc thickness at eight points, about 45 ° apart and 10 mm (3/8 in.) in from the outer edge of the brake disc. Replace the brake disc if the smallest measurement is less than the max. refinishing limit.

   Brake disc thickness:
   Standard: 8.9—9.1 mm (0.35—0.36 in.)
   Max. refinishing limit: 8.0 mm (0.31 in.)
   Brake disc parallelism: 0.015 mm (0.0006 in.) max.

   NOTE: This is the maximum allowable difference between the thickness measurements.

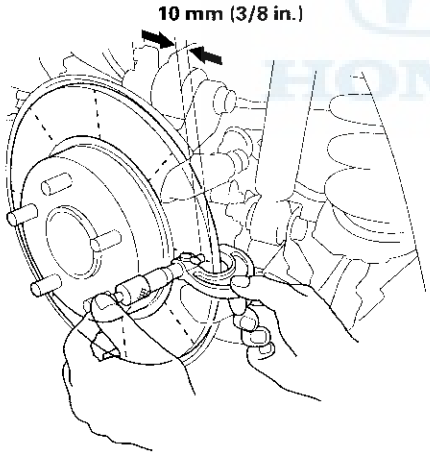

5. If the brake disc is beyond the service limit for parallelism, refinish the brake disc with a Honda-approved commercially available on-car brake lathe.

   NOTE: If the brake disc is beyond the service limit for refinishing, replace it (see page 19-25).

6. Install the brake pads (see page 19-20).

7. Clean the mating surfaces between the brake disc and the inside of the wheel, then install the rear wheels.

Rear Brake Disc Replacement

NOTE: Keep any grease off the brake disc and brake pads.

1. Raise the rear of the vehicle, and support it with safety stands in the proper locations (see page 1-10).

2. Remove the rear wheel.

3. Release the parking brake lever fully.

4. Remove the brake hose mounting bolt (A) from the bracket.

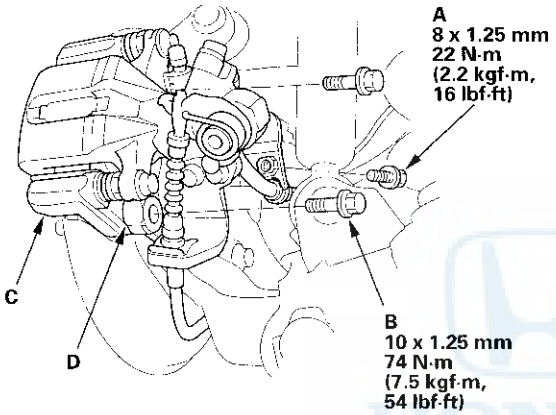

5. Remove the brake caliper bracket mounting bolts (B), then remove the caliper assembly (C) from the knuckle. To prevent damage to the caliper assembly or brake hose, use a short piece of wire to hang the caliper assembly from the undercarriage. Do not twist the brake hose and the parking brake cable excessively.

   NOTE: Make sure the washers (D) position on reassembly, if they are removed (see step 5 on page 18-33).

6. Remove the brake disc flathead screws (A).

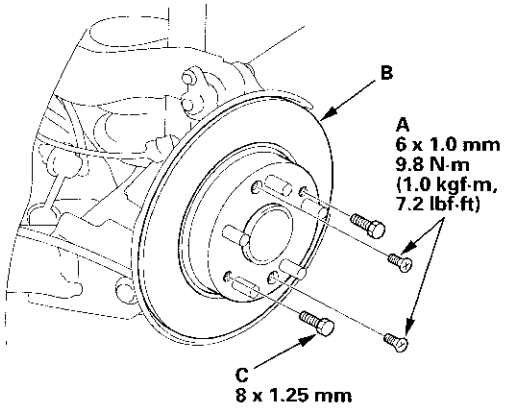

7. Remove the brake disc (B) from the hub bearing unit.

   NOTE: If the brake disc is stuck to the hub bearing unit, thread two 8 x 1.25 mm bolts (C) into the brake disc to push it away from the hub bearing unit. Turn each bolt 90 degrees at a time to prevent the brake disc from binding.

8. Install the brake disc in the reverse order of removal, and note these items:

   - Before installing the brake disc, clean the mating surfaces between the hub bearing unit and the inside of the brake disc.
   - Adjust the parking brake (see page 19-7).

9. Inspect the brake disc runout (see page 19-23).

10. Clean the mating surfaces between the brake disc and the inside of the wheel, then install the rear wheel.

Conventional Brake Components

Rear Brake Caliper Overhaul

⚠CAUTION

Frequent inhalation of brake pad dust, regardless of material composition, could be hazardous to your health.
- Avoid breathing dust particles.
- Never use an air hose or brush to clean brake assemblies. Use an OSHA-approved vacuum cleaner.

Remove, disassemble, inspect, reassemble, and install the caliper, and note these items:

NOTE: Make sure that the caliper pins are installed correctly. Upper caliper pin B and lower caliper pin A are different. If these caliper pins are installed in the wrong location, it will cause vibration, uneven or rapid pad wear, and possibly uneven tire wear.

- Do not spill brake fluid on the vehicle; it may damage the paint; if brake fluid gets on the paint, wash it off immediately with water.
- To prevent dripping brake fluid, cover disconnected hose joints with rags or shop towels.
- Clean all parts in brake fluid and air dry; blow out all passages with compressed air.
- Before reassembling, check that all parts are free of dirt and other foreign particles.
- Replace parts with new ones as specified in the illustration.
- Make sure no dirt or other foreign matter gets into the brake fluid.
- Make sure no grease or oil gets on the brake discs or pads.
- When reusing brake pads, always reinstall them in their original positions to prevent loss of braking efficiency.
- Do not reuse drained brake fluid. Use only clean Honda DOT 3 Brake Fluid from an unopened container. Using a non-Honda brake fluid can cause corrosion and shorten the life of the system.
- Coat the piston, piston seal groove, and caliper bore with clean brake fluid.
- Use recommended greases in the rear caliper set.
- After installing the caliper, check the brake hose and line for leaks, interference, and twisting.

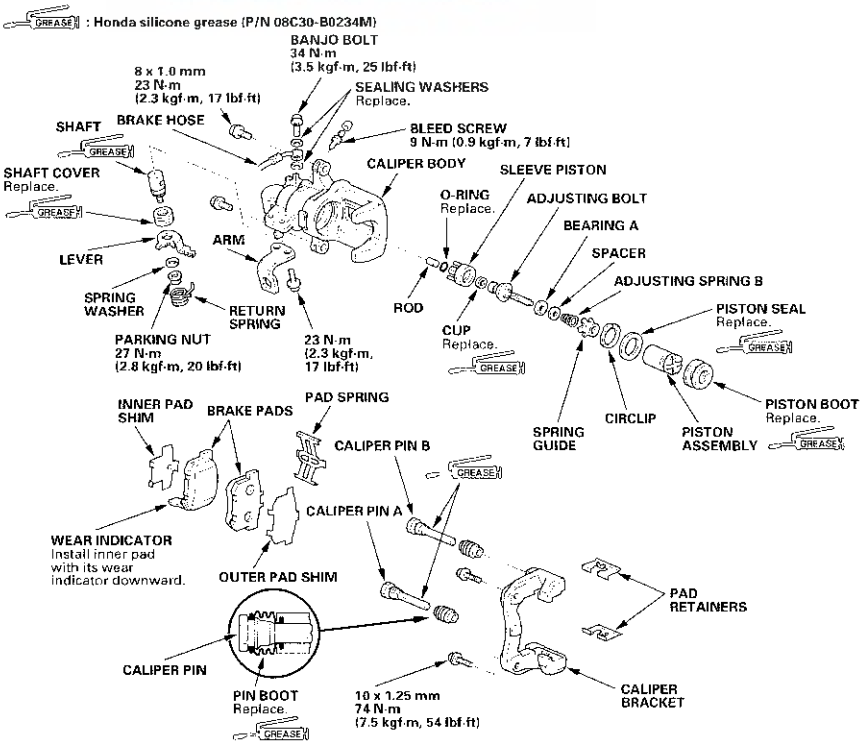

Rear Drum Brake Inspection

⚠CAUTION

Frequent inhalation of brake pad dust, regardless of material composition, could be hazardous to your health.
- Avoid breathing dust particles.
- Never use an air hose or brush to clean brake assemblies. Use an OSHA-approved vacuum cleaner.

1. Raise the rear of the vehicle, and support it with safety stands in the proper locations (see page 1-10).
2. Remove the rear wheels.
3. Release the parking brake, and remove the rear brake drum (see page 19-29).

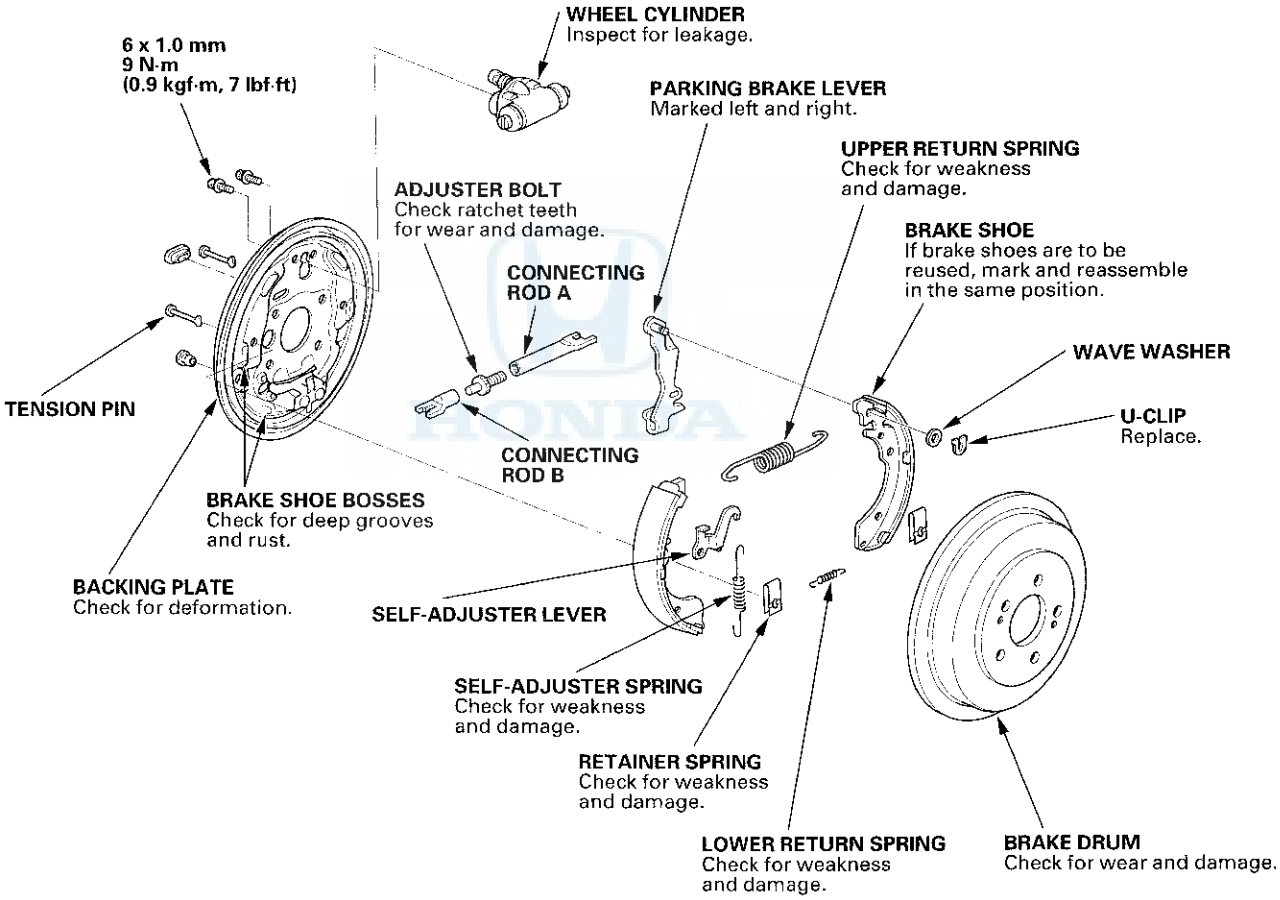

(cont'd)

Rear Drum Brake Inspection (cont'd)

4. Check the wheel cylinder (A) for leakage.

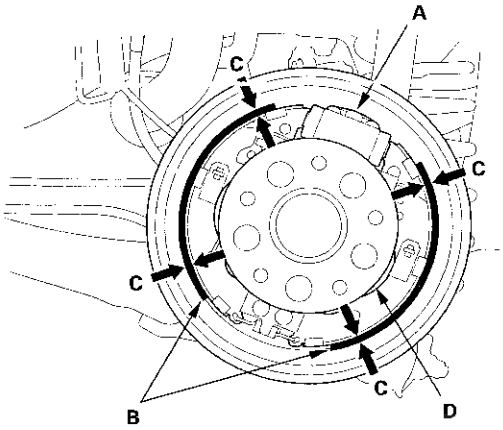

5. Check the brake linings (B) for cracking, glazing, wear, and contamination.

   NOTE: Contaminated brake linings or drums reduce stopping ability.

6. Measure the brake lining thickness (C). Measurement does not include brake shoe thickness.

   Brake lining thickness:
   Standard: 4.5 mm (0.18 in.)
   Service limit: 2.0 mm (0.08 in.)

7. If any part of the brake lining thickness is less than the service limit, replace the brake shoes as a set.

8. Check the hub bearing unit (D) for smooth operation. If it requires servicing, replace the hub bearing unit (see page 18-34).

9. Measure the inside diameter of the brake drum with inside vernier calipers.

   Drum inside diameter:
   Standard: 219.9—220.0 mm (8.657—8.661 in.)
   Service limit: 221 mm (8.70 in.)

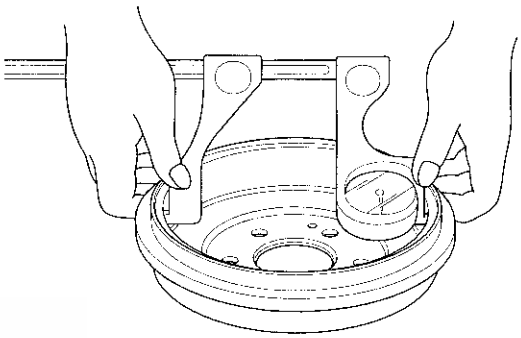

10. If the inside diameter of the brake drum is more than the service limit, replace the brake drum.

11. Check the brake drum for scoring, grooves, corrosion, and cracks.

12. Install the brake drum (see page 19-29).

13. Clean the mating surfaces between the brake disc and the inside of the wheel, then install the rear wheels.

Rear Brake Drum Replacement

NOTE: Keep any grease off the brake drum and brake shoes.

1. Raise the rear of the vehicle, and support it with safety stands in the proper locations (see page 1-10).

2. Remove the rear wheel.

3. Release the parking brake, and remove the brake drum (A) from the hub bearing unit.

   NOTE:
   - If necessary, turn the adjuster bolt (B) with a flat-tip screwdriver until the shoes become loose.
   - If the brake drum is stuck to the hub bearing unit, thread two 8 x 1.25 mm bolts (C) into the brake drum to push it away from the hub bearing unit. Turn each bolt 90 degrees at a time to prevent the brake drum from binding.

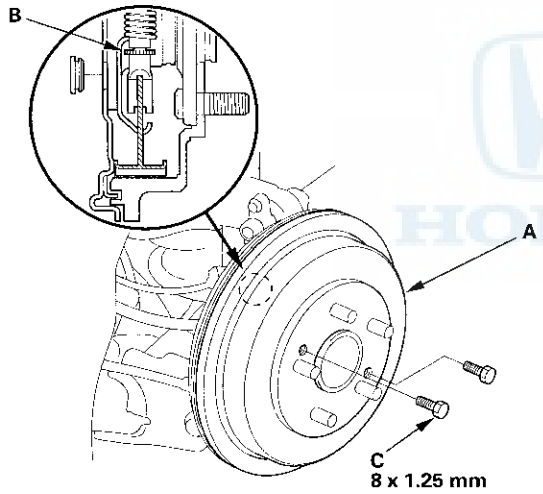

4. Install the brake drum in the reverse order of removal.

   NOTE:
   - Before installing the brake drum, clean the mating surfaces between the rear hub bearing unit and the inside of the brake drum.
   - After installation, press the brake pedal several times to make sure the brakes work and self adjust the brake shoes. Do not drive the vehicle before doing this procedure.

5. Clean the outside mating surfaces between the brake drum and the inside of the wheel, then install the rear wheel.

Rear Brake Shoe Replacement

Special Tools Required
Brake spring installer 07LAF-SM40200

⚠CAUTION

Frequent inhalation of brake pad dust, regardless of material composition, could be hazardous to your health.
- Avoid breathing dust particles.
- Never use an air hose or brush to clean brake assemblies. Use an OSHA-approved vacuum cleaner.

Disassembly

1. Raise the rear of the vehicle, and support it with safety stands in the proper locations (see page 1-10).

2. Remove the rear wheels.

3. Release the parking brake, and remove the brake drum (see page 19-29).

4. Unhook the upper return spring (A) from the rearward shoe using the brake spring installer (B).

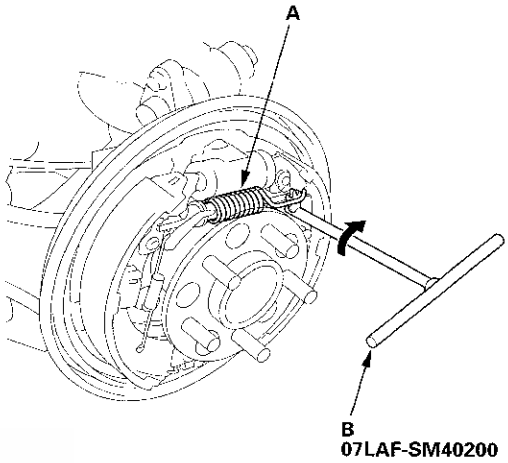

5. Remove the tension pins (A) by pushing respective retainer spring (B), and turning the pin.

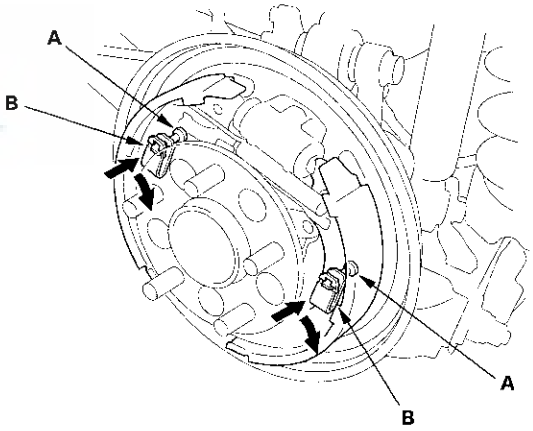

6. Remove the lower return spring (A), and remove the brake shoe assembly over the hub.

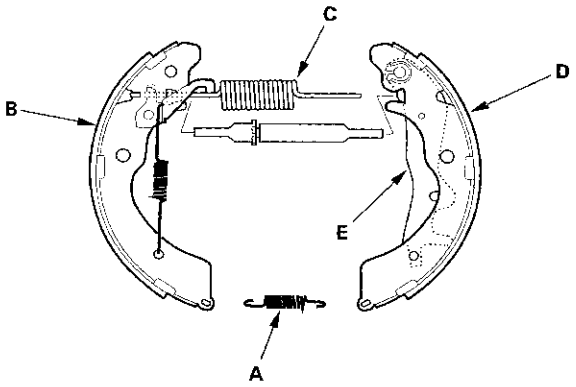

7. Remove the forward brake shoe (B) by removing the upper return spring (C), and disassemble the brake shoe assembly.

8. Remove the rearward brake shoe (D) by disconnecting the parking brake cable from the parking brake lever (E).

9. Remove the U-clip (A), and the wave washer (B), then separate the parking brake lever (C) from the brake shoe (D).

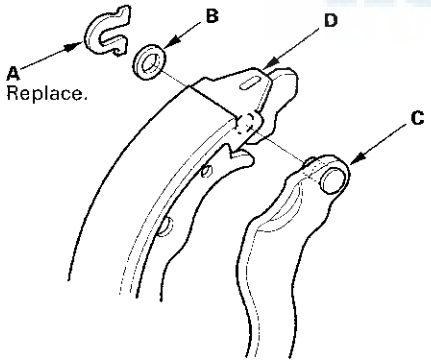

Reassembly

1. Apply Molykote 44MA to the sliding surface of the pivot pin (A) on the parking brake lever (B).

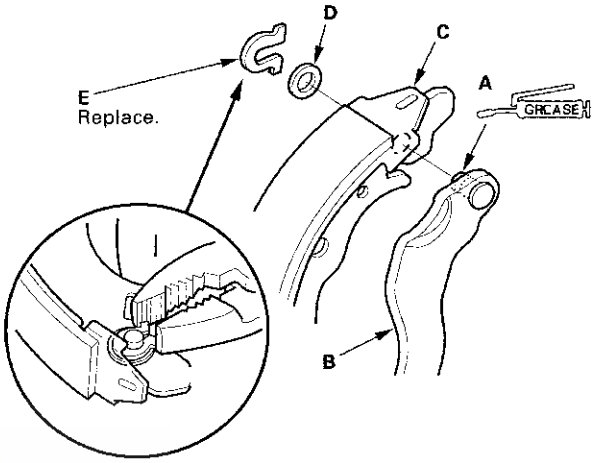

2. Install the rearward brake shoe (C) and the wave washer (D) on the pivot pin, and secure with a new U-clip (E).

   NOTE: Pinch the U-clip securely to prevent the parking brake lever from coming out of the brake shoe.

3. Connect the parking brake cable to the parking brake lever.

4. Apply a thin coat of Molykote 44MA to the connecting rod ends (A), and the sliding surfaces (B) as shown. Wipe off any excess. Keep grease off the brake linings.

   Greasing symbols:

   ➡ • **Connecting rod ends and sliding surfaces**

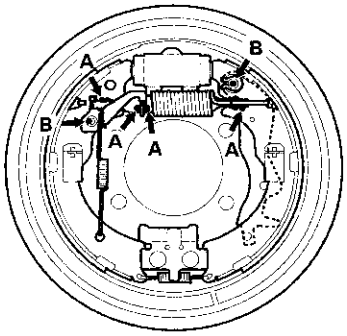

(cont'd)

Rear Brake Shoe Replacement (cont'd)

5. Apply a thin coat of Molykote 44MA to the shoe ends (A) and to the edge of the shoe surfaces (B) that make contact with the backing plate as shown. Wipe off any excess. Keep grease off the brake linings.

   Greasing symbols:

   ➡• **Brake shoe ends**

   ⇨o **Edge of the shoe surfaces**

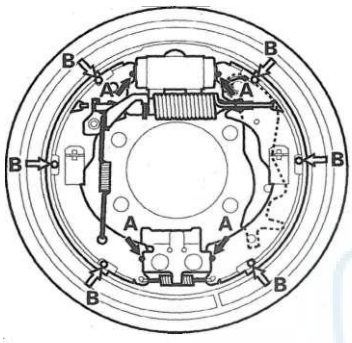

6. Install connecting rods A and B on the adjuster bolt (C).

   NOTE:
   - Clean the threaded portions of connecting rod A and the sliding surface of connecting rod B, then coat them with Molykote 44MA.
   - Shorten connecting rod A by fully turning the adjuster bolt.

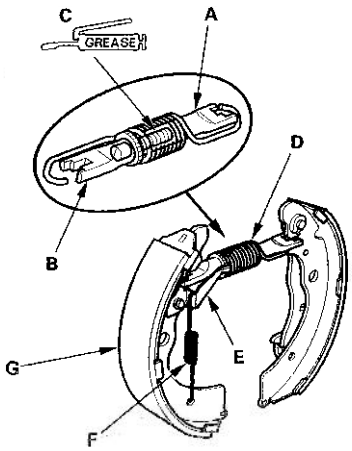

7. Assemble the brake shoes, the upper return spring (D), and the connecting rods with the adjuster bolt against the backing plate, then install the self-adjuster lever (E) and the self-adjuster spring (F) on the forward brake shoe (G).

8. Install the tension pins (A) and the retainer springs (B) by pushing in the respective spring and turning the pin.

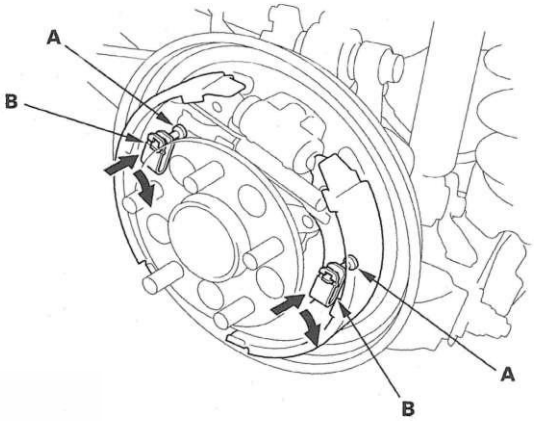

9. Install the lower return spring.

   NOTE: Make sure the brake shoes positioning on the brake shoe bosses of the backing plate, and fitting the top of the brake shoes onto the wheel cylinder pistons.

10. Hook the end (A) of the upper return spring (B) with the brake spring installer (C).

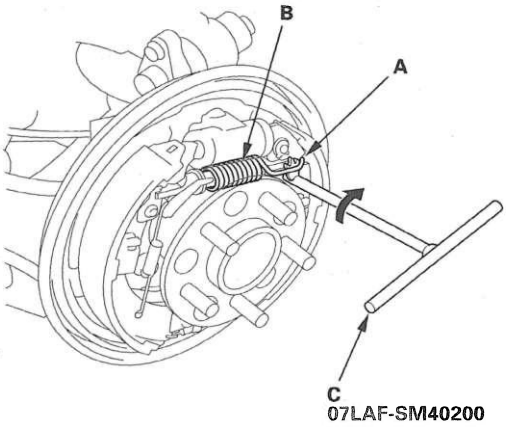

11. Install the brake drum (see page 19-29).

    NOTE: Before installing the brake drum, clean the mating surfaces between the rear hub and the inside of the brake drum.

12. Clean the mating surfaces between the brake drum and the inside of the wheel, then install the rear wheels.

13. Press the brake pedal several times to make sure the brakes work and to set the self-adjusting brake.

    NOTE: Engagement of the brakes may require a greater pedal stroke immediately after the brake shoes have been replaced as a set. Several applications of the brake pedal will restore the normal pedal stroke.

14. Adjust the parking brake (see page 19-7).

Rear Wheel Cylinder Replacement

NOTE:
- Do not spill brake fluid on the vehicle; it may damage the paint; if brake fluid does contact the paint, wash it off immediately with water.
- To prevent spills, cover the hose joints with clean rags or shop towels.

1. Remove the brake shoes (see page 19-30).

2. Disconnect the brake line (A) from the wheel cylinder (B).

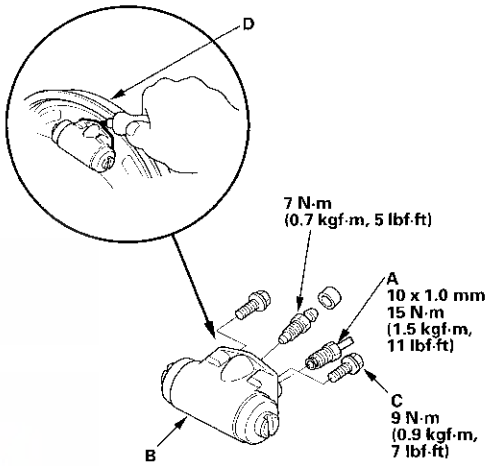

3. Remove the bolts (C) and the wheel cylinder from the backing plate.

   NOTE: Use the special bolts on reassembly.

4. Apply Cemedine 366E sealant or equivalent between the wheel cylinder and backing plate (D), and install the wheel cylinder, then connect the brake line.

5. Install the brake shoes (see page 19-31).

6. Bleed the normal brake system (except the servo unit and power unit) (see page 19-97).

7. Inspect and adjust the parking brake (see page 19-7).

8. Spin the wheels to check for brake drag.

9. After installation, check for leaks at hose and line joints or connections, and retighten if necessary. Test-drive the vehicle, then check for leaks (see page 19-34).

Conventional Brake Components

Brake Hose and Line Inspection

1. Inspect the brake hoses for damage, deterioration, leaks, interference, and twisting.
2. Check the brake lines for damage, rusting, and leaks. Also check for bent brake lines.
3. Check for leaks at hose and line joints and connections, and retighten if necessary.
4. Check the master cylinder, the servo unit, the power unit, and the ABS or VSA modulator-control unit for damage and leaks.

Connection Point	Component	Connected to	Specified Torque Value	Note
A	Front brake caliper	Brake hose	34 N·m (3.5 kgf·m, 25 lbf·ft)	Banjo bolt
		Bleed screw	9 N·m (0.9 kgf·m, 7 lbf·ft)	
B	Rear brake caliper (disc type)	Brake hose	34 N·m (3.5 kgf·m, 25 lbf·ft)	Banjo bolt
		Bleed screw	9 N·m (0.9 kgf·m, 7 lbf·ft)	
	Rear wheel cylinder (drum type)	Brake line	15 N·m (1.5 kgf·m, 11 lbf·ft)	Flare nut
		Bleed screw	7 N·m (0.7 kgf·m, 5 lbf·ft)	
C	Brake hose	Brake line	15 N·m (1.5 kgf·m, 11 lbf·ft)	Flare nut
D	Master cylinder (ABS)	Brake line	15 N·m (1.5 kgf·m, 11 lbf·ft)	Flare nut
	Master cylinder (VSA)		22 N·m (2.2 kgf·m, 16 lbf·ft)	
E	ABS modulator-control unit	Brake line	15 N·m (1.5 kgf·m, 11 lbf·ft)	Flare nut
	VSA modulator-control unit	Brake line (10 mm nut)	15 N·m (1.5 kgf·m, 11 lbf·ft)	
		Brake line (12 mm nut)	22 N·m (2.2 kgf·m, 16 lbf·ft)	
F	4-way joint	Brake line	15 N·m (1.5 kgf·m, 11 lbf·ft)	Flare nut
G	Servo unit	Brake line	15 N·m (1.5 kgf·m, 11 lbf·ft)	Flare nut
		Brake hose	———	Hose clamp
H	Power unit	Brake line	15 N·m (1.5 kgf·m, 11 lbf·ft)	Flare nut
		Brake hose	———	Hose clamp

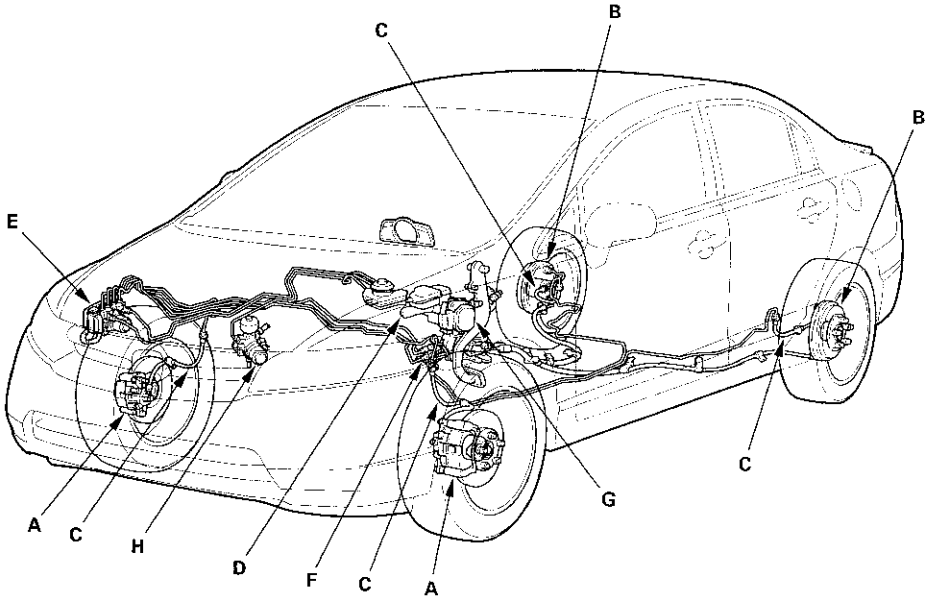

Brake Hose Replacement

NOTE:
- Before reassembling, check that all parts are free of dirt and other foreign particles.
- Replace parts with new ones whenever specified to do so.
- Do not spill brake fluid on the vehicle; it may damage the paint; if brake fluid gets on the paint, wash it off immediately with water.
- Plug the ends of the hoses and the joints to prevent spilling brake fluid.
- The illustrations show only the front of the vehicle except where the procedure is different for the rear.

1. Remove the wheel.

2. Disconnect the brake hose (A) from the brake line (B) using a 10 mm flare-nut wrench (C).

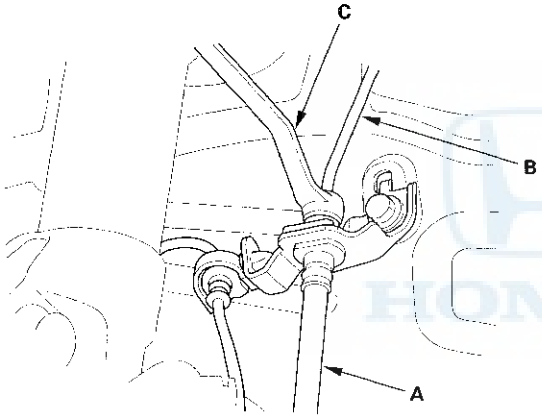

3. With clip type: Remove the brake hose clip (A) from the brake hose (B).

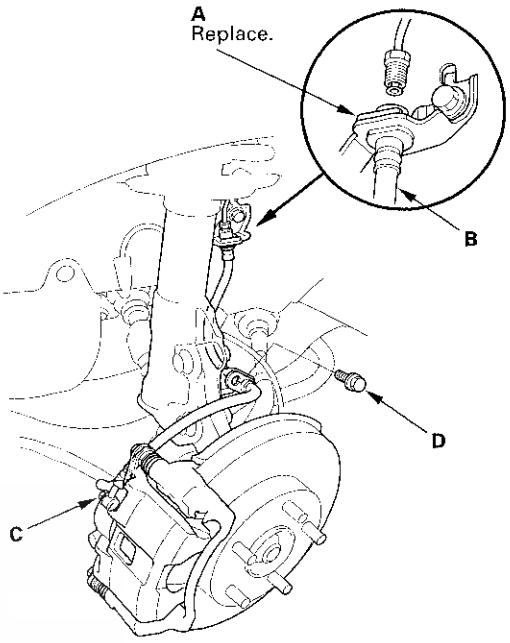

4. Disc brake type: Remove the banjo bolt (C), and disconnect the brake hose from the caliper.

5. Remove the brake hose mounting bolt(s) (D), then remove the brake hose.

   NOTE: Without clip type: Remove the brake hose with the bracket.

(cont'd)

Brake Hose Replacement (cont'd)

6. Install the brake hose (A) with the brake hose mounting bolt (B).

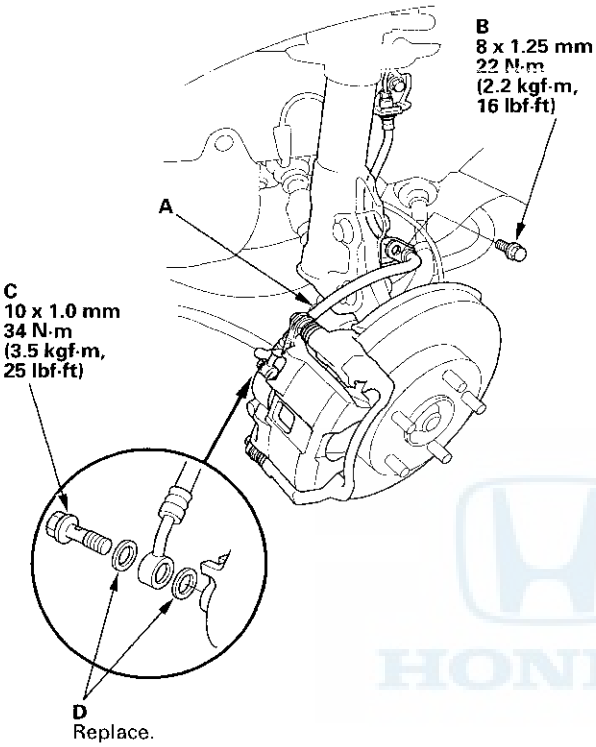

7. Disc brake type: Connect the brake hose to the caliper with the banjo bolt (C) and the new sealing washers (D).

8. Position the brake hose ends (A).

NOTE:
- With clip type: Install the brake hose on the brake hose bracket (B) with a new brake hose clip (C).
- Without clip type: Install the brake hose bracket (D) to the frame.

With clip type

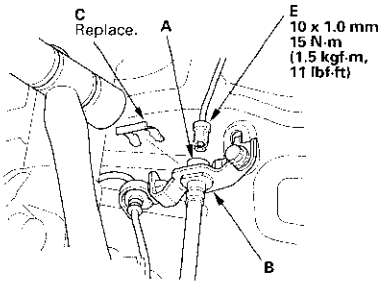

Without clip type

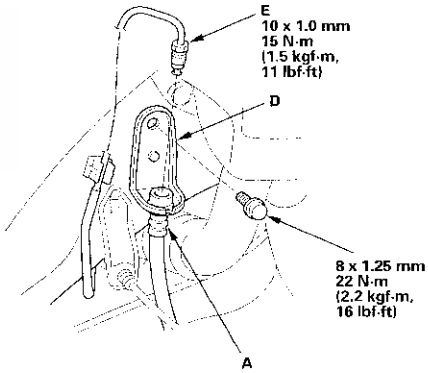

9. Connect the brake line (E) to the brake hose.

10. After installing the brake hose, bleed the normal brake system (except the servo unit and power unit) (see page 19-97).

11. Do the following checks:

- Check the brake hose and line joint for leaks, and tighten if necessary.
- Check the brake hoses for interference and twisting.

12. Clean the mating surfaces between the brake disc or the brake drum and the inside of the wheel, then install the wheel.

Parking Brake Cable Replacement

Exploded View

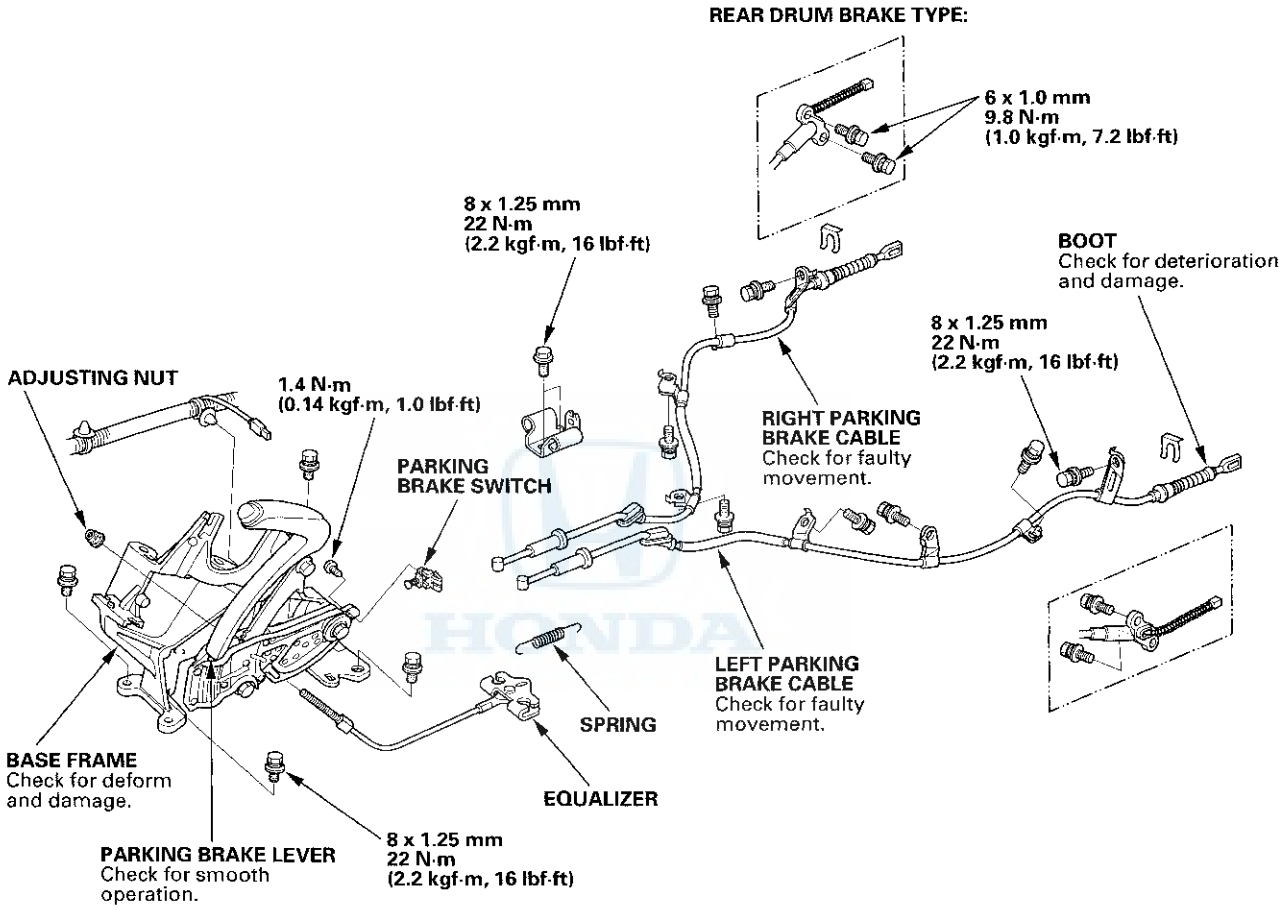

(cont'd)

Parking Brake Cable Replacement (cont'd)

NOTE:
- The parking brake cables must not be bent or distorted. This will lead to stiff operation and premature failure.
- Refer to the Exploded View as needed during this procedure.

Rear Disc Brake Type

1. Release the parking brake lever fully.

2. Loosen the parking brake cable adjustment nut (see page 19-8).

3. Remove the parking brake cable clip (A) from the brake cable (B).

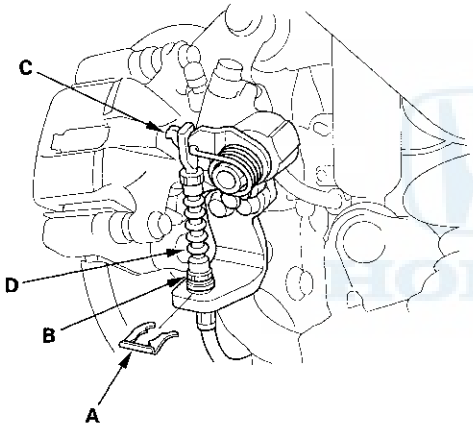

4. Disconnect the parking brake cable from the lever (C).

5. Remove the parking brake cable mounting hardware, then remove the cable.

6. Install the parking brake cable in the reverse order of removal, and note these items:

   - Be careful not to bend or distort the cable and boot (D).
   - Make sure the parking brake cable clip is fully seated on the cable housing.
   - Adjust the parking brake (see page 19-8).

Rear Drum Brake Type

1. Loosen the parking brake cable adjustment nut (see page 19-9).

2. Remove the brake drum and shoes, and disconnect the parking brake cable from the parking brake lever (see page 19-30).

3. Remove the flange bolt (A) and parking brake cable (B) from the backing plate (C).

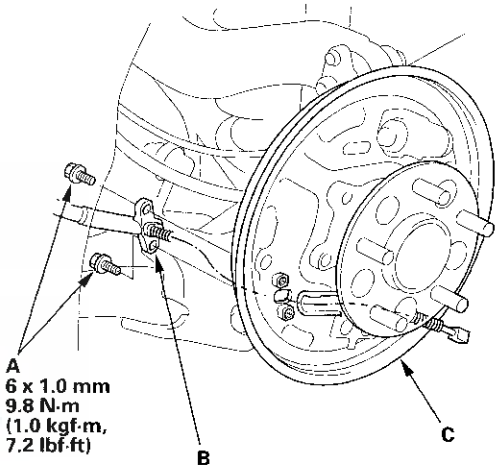

4. Reinstall the parking brake cable in the reverse order of removal, and note these items:

   - Be careful not to bend or distort the cable.
   - Connect the parking brake cable to the brake lever, and install the brake shoes and drum (see page 19-31).
   - Adjust the parking brake (see page 19-9). Apply the parking brake firmly 10 times then adjust it again.

Parking Brake Lever Grip and Cover Replacement

Removal

Lever Grip

1. Remove the center console (see page 20-79).
2. Pull up the parking brake fully (8 to 10 clicks).
3. Start at the front edge (A), peel the lever grip away from lever cap (B). Continue to peel the grip from the lever to gain access to the hooks (C).

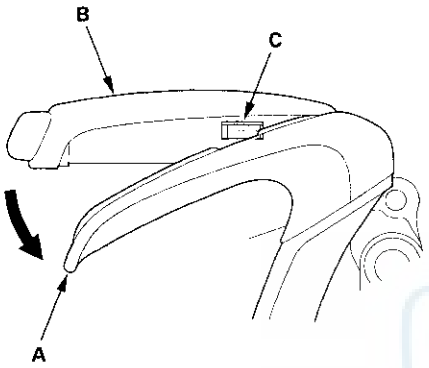

4. Push in both sides of the hook (A) on the lever cap (B), and remove the lever cap and the pushrod (C) with the knob (D).

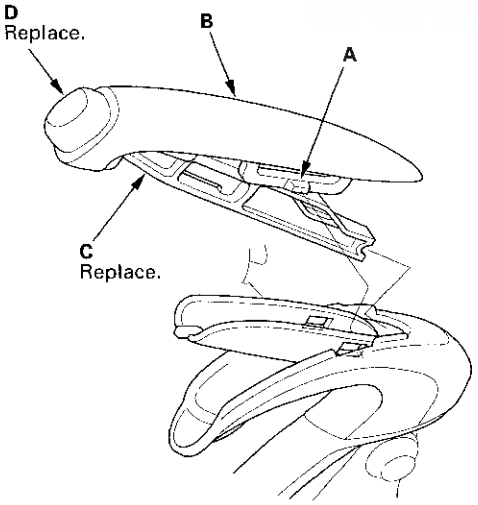

5. Remove the lever grip (A) by sliding it up.

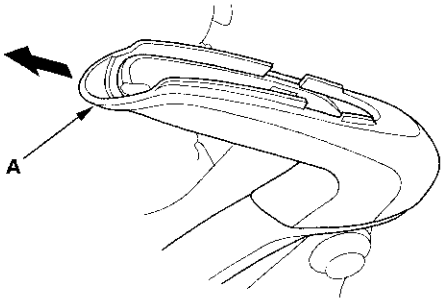

Lever Cover

6. Remove the clip (A) on the driver's side of the parking brake lever cover (B).

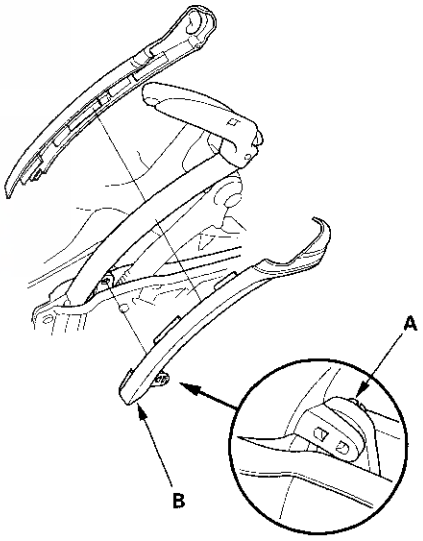

7. Separate the parking brake lever covers, and remove them.

(cont'd)

Parking Brake Lever Grip and Cover Replacement (cont'd)

Installation

Lever Cover

1. Install the clip (A) on the driver's side of the parking brake lever cover (B) to the lever (C).

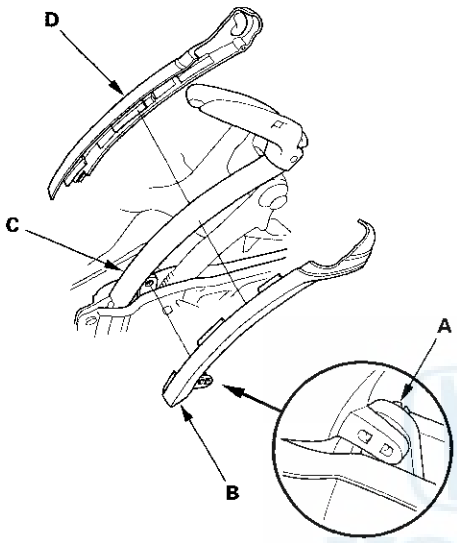

2. Install the passenger's side of the parking brake lever cover (D), and squeeze both sides of the cover together.

Lever Grip

3. Install a new lever grip (A) by sliding it over the cover.

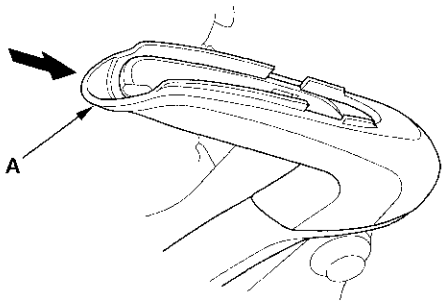

4. Install a new lever cap (A) on to the lever by aligning the notch (B) in the cap with the tab (C) on the lever.

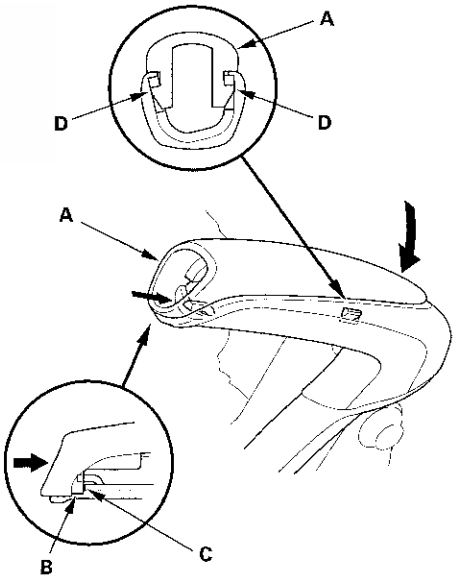

5. With the lever cap and grip in position, push down on the cap to lock the hooks (D) into place.

6. Carefully peel back the front edge (A) of the lever grip, and apply a small amount of gel type super glue (B). Carefully push the grip back into place and hold while waiting a minute for the glue to dry.

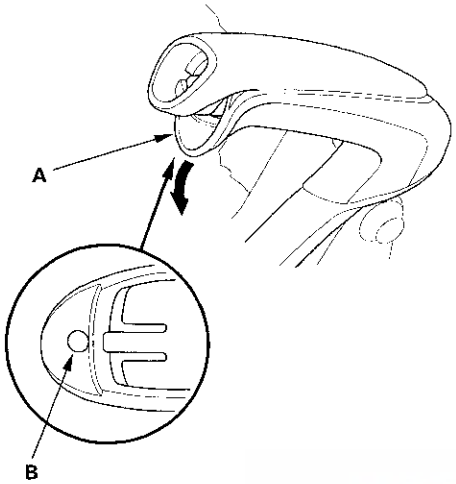

7. Install a new pushrod (A) with the knob (B), and push them into the parking brake lever (C).

   NOTE: Do not use the removed pushrod and knob.

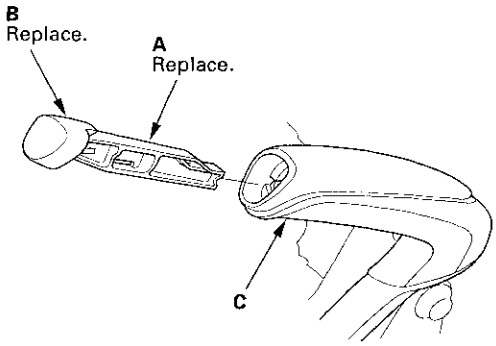

8. Release and pull the parking brake about 10 times.

9. Check if the push knob play is about 2 mm (0.08 in.) and that the parking brake lever moves smoothly, then do the parking brake inspection (see page 19-7).

10. Install the center console (see page 20-79).

Brakes

Conventional Brake Components 19-1

Advanced Hydraulic Booster

Component Location Index 19-44
General Troubleshooting Information 19-45
Memorizing 0 (Zero) Position 19-48
DTC Troubleshooting Index 19-49
Symptom Troubleshooting Index 19-50
System Description 19-51
Circuit Diagram 19-56
DTC Troubleshooting 19-60
Symptom Troubleshooting 19-88
Brake System Bleeding 19-95
Master Cylinder and Servo Unit Replacement 19-100
Master Cylinder Inspection 19-104
Power Unit Replacement 19-105
Power Unit Disassembly 19-107
Accumulator Disposal 19-108
Brake Pedal Replacement 19-108
Brake Pedal Stroke Sensor Replacement 19-109
Buzzer Replacement 19-109

ABS (Anti-lock Brake System) Components ('06-09 Models) 19-111

VSA (Vehicle Stability Assist) System Components ('09 Model) 19-159

Advanced Hydraulic Booster

Component Location Index

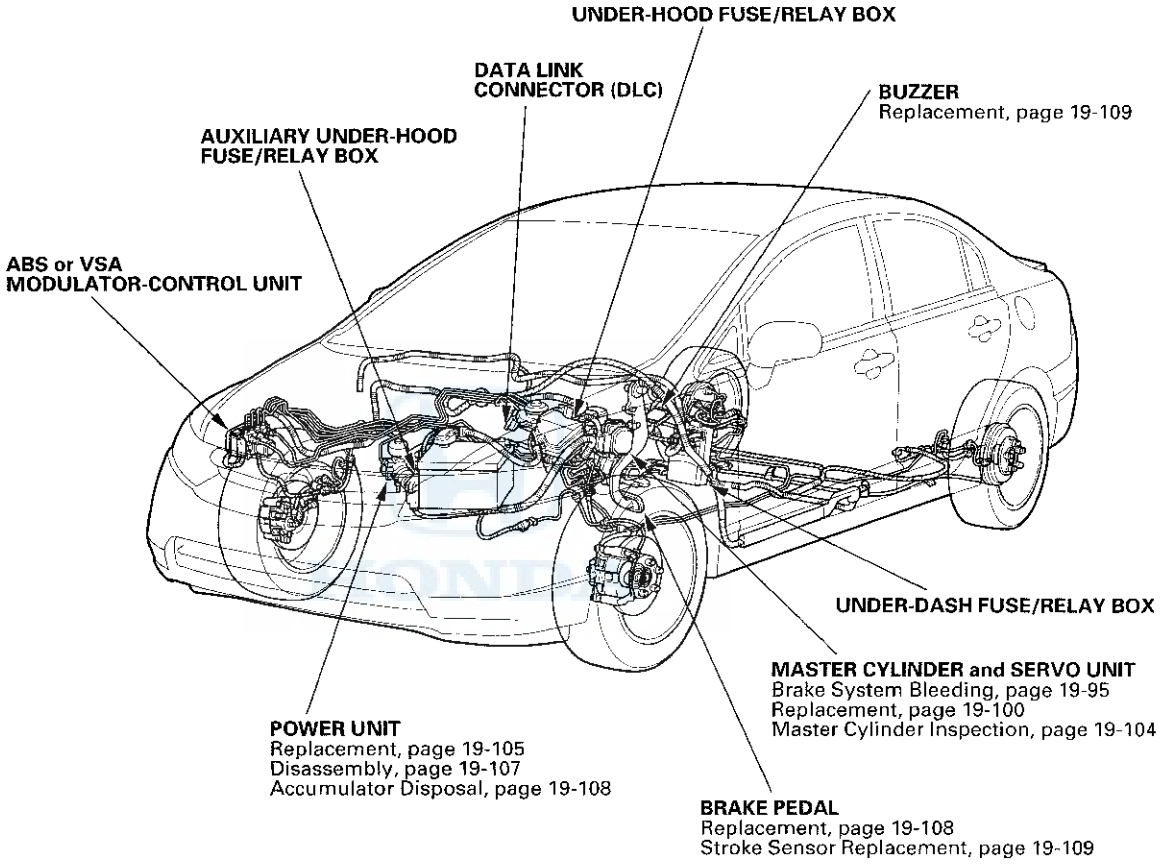

General Troubleshooting Information

NOTICE

A serious advanced hydraulic booster problem will decrease the braking power of the vehicle, and increase the risk of a collision.
If the system indicators come on and the buzzer sounds while driving, stop the vehicle in a safe place as soon as possible, and do not drive the vehicle until the system returns to normal.

System Indicators

This system has two indicators and a buzzer:

- AHB indicator (A) (amber color)
- Brake system indicator (B) (red color)
- Buzzer (audible alert)

When the system detects a problem, it turns on the AHB indicator and buzzer, and/or the brake system indicator. Depending on the failure, the servo unit determines which indicators are turned on.
When the system is OK, the AHB indicator and brake system indicator come on for about 2 seconds after turning the ignition switch to ON (II), then they go off.

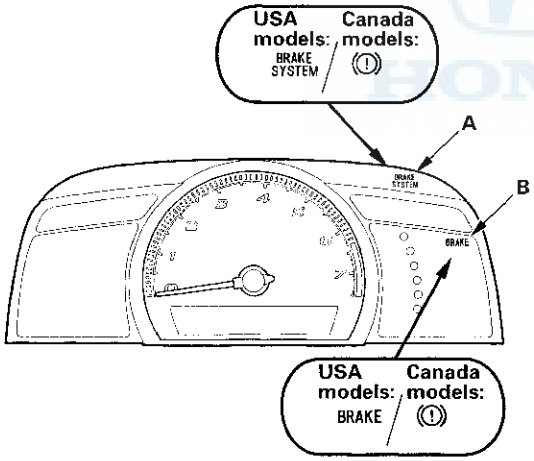

AHB Indicator

The AHB indicator comes on when the advanced hydraulic booster function is lost, and this may affect normal brake operation.
If AHB indicator comes on, press the brake pedal slowly, and check the braking effectiveness then stop the vehicle and inspect above system.

Brake System Indicator

The brake system indicator comes on when the advanced hydraulic booster function is lost, the EBD function is lost, the parking brake is applied, and/or the brake fluid level is low.

Buzzer

The buzzer indicates audibly, in conjunction with the brake system indicator, when the advanced hydraulic booster function is lost, and this may affect normal brake operation.

(cont'd)

General Troubleshooting Information (cont'd)

Diagnostic Trouble Code (DTC)

- The memory holds all DTCs. However, when the same DTC is detected more than once, the more recent DTC is written over the earlier one. Therefore, when the same problem is detected repeatedly, it is memorized as a single DTC.
- The DTCs are indicated in ascending number order, not in the order they occur.
- The DTCs are memorized in the EEPROM. Therefore, the memorized DTCs cannot be erased by disconnecting the battery. Do the specified procedures to clear the DTCs.

Self-diagnosis

- Self-diagnosis can be classified into two categories:
  - Initial diagnosis: Done right after the ignition switch is turned to ON (II) and until the AHB indicator and the brake system indicator go off.
  - Regular diagnosis: Done right after the initial diagnosis until the ignition switch is turned to LOCK (0).
- When the system detects a problem, the servo unit shifts to fail-safe mode.

Pump Motor

- The pump motor in the power unit operates when the accumulator inner pressure becomes low while the ignition switch is turned to ON (II).
- The pump motor is operated by the servo unit. The servo unit has independent main activation and subactivation circuits in the ECU (electric control unit). If either circuit has a problem, the other one will run the pump motor.

Brake Fluid Replacement/Air Bleeding

Brake fluid replacement and air bleeding procedures for the servo unit and power unit are independent of the conventional brake system (see page 19-95).

How to Troubleshoot DTCs

The troubleshooting procedures assume that the cause of the problem is still present, and the AHB and/or brake system indicator is still on. Following a troubleshooting procedure for a code that has been cleared but does not reset can result in incorrect diagnosis.

1. Question the customer about the conditions when the problem occurred, and try to reproduce the same conditions for troubleshooting. Find out when the AHB and/or brake system indicator came on, such as during activation, after activation, when the vehicle was traveling at a certain speed, etc. If necessary, have the customer demonstrate the concern.

2. When the AHB and/or brake system indicator does not come on during the test-drive, but troubleshooting is done based on the DTC, check for loose connectors, poor contact of the terminals, etc. in the circuit indicated by the DTC before you start troubleshooting.

3. After troubleshooting, or repairs are done, clear the DTCs, and test-drive the vehicle under the same conditions that originally set the DTCs. Make sure the AHB and/or brake system indicators do not come on.

4. Check for DTCs from other systems which are connected via F-CAN. If there are DTCs that are related to F-CAN, one possible cause was that the ignition switch was turned to ON (II) with the servo unit connector disconnected. Clear the DTCs. Check for fuel and emissions DTC's first.

   NOTE: Always troubleshoot fuel and emissions DTC's first.

Intermittent Failures

The term "intermittent failure" means a system may have had a failure, but it checks OK now. If you cannot reproduce the condition, check for loose connectors or terminal pins related to the circuit that you are troubleshooting.

How to Use the HDS (Honda Diagnostic System)

1. If the AHB indicator and the brake system indicator stay on, connect the HDS to the data link connector (DLC) (A) located under the driver's side of the dashboard.

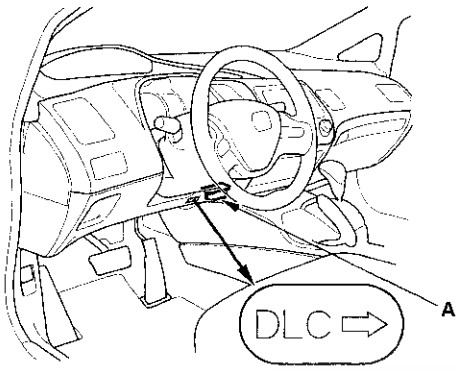

2. Turn the ignition switch to ON (II).

3. Make sure the HDS communicates with the vehicle and the servo unit. If it doesn't, troubleshoot the DLC circuit (see page 11-213).

4. Check the diagnostic trouble code (DTC) for all systems, troubleshoot the powertrain DTCs first and note it. Then refer to the indicated DTC's troubleshooting, and do the appropriate troubleshooting procedure.

   NOTE:
   - The HDS can read the DTC, the current data, and other system data.
   - For specific operations, refer to the Help menu that came with the HDS.

How to Retrieve DTCs

1. With the ignition switch in LOCK (0), connect the HDS to the data link connector (DLC) under the driver's side of the dashboard.

2. Turn the ignition switch to ON (II).

3. Make sure the HDS communicates with the vehicle and the servo unit. If it doesn't, troubleshoot the DLC circuit (see page 11-213).

4. Follow the prompts on the HDS to display the DTC(s) on the screen. After determining the DTC, refer to the DTC troubleshooting. Do the all systems DTC check, and troubleshoot any powertrain DTCs first.

5. Turn the ignition switch to LOCK (0).

How to Clear DTCs

1. With the ignition switch in LOCK (0), connect the HDS to the data link connector (DLC) under the driver's side of the dashboard.

2. Turn the ignition switch to ON (II).

3. Make sure the HDS communicates with the vehicle and the servo unit. If it doesn't, troubleshoot the DLC circuit (see page 11-213).

4. Clear the DTC(s) by following the screen prompts on the HDS.

5. Turn the ignition switch to LOCK (0).

Memorizing 0 (Zero) Position

Do the memorizing 0 (zero) position whenever you do any of these actions:

- Replace the servo unit.
- Replace the brake pedal.
- Replace the brake pedal stroke sensor.
- Adjust the brake pedal height.

1. With the ignition switch in LOCK (0), connect the HDS to the data link connector (DLC) (A) located under the driver's side of the dashboard.

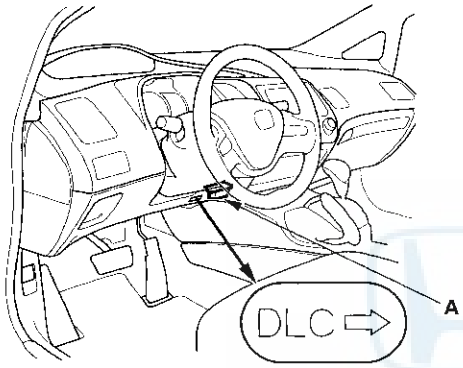

2. Turn the ignition switch to ON (II).

3. Make sure the HDS communicates with the vehicle and the servo unit. If it doesn't, troubleshoot the DLC circuit (see page 11-213).

4. Clear the DTC(s) by following the screen prompts on the HDS.

5. Turn the ignition switch to LOCK (0), then turn it to ON (II) again.

6. Check for DTCs and make sure no DTC is indicated, then memorize the 0 (zero) position of the brake pedal stroke sensor and the servo unit by following the screen prompts on the HDS.

   NOTE:
   - See the HDS Help menu for specific instructions.
   - If the memorization process does not work, replace the servo unit (see page 19-100).

7. Turn the ignition switch to LOCK (0).

DTC Troubleshooting Index

DTC	Detection Item	AHB Indicator	Brake System Indicator	Buzzer (by sound)	Note
11	Motor Lock and Circuit Malfunction	ON	ON	ON	(see page 19-60)
12	Motor Voltage Malfunction 1	ON	ON/OFF	ON/OFF	(see page 19-60)
13	Motor Voltage Malfunction 2	ON	ON/OFF	ON/OFF	(see page 19-60)
14	Motor Stuck ON	ON	ON	ON	(see page 19-63)
21	PACC Sensor Malfunction	ON	ON	ON	(see page 19-64)
22	PREG Sensor Malfunction	ON	OFF	OFF	(see page 19-64)
23	PMC Sensor Malfunction	ON	OFF	OFF	(see page 19-64)
24	Brake Pedal Stroke Sensor Malfunction	ON	OFF	OFF	(see page 19-64)
31	NO Solenoid Valve Malfunction	ON	OFF	OFF	(see page 19-66)
32	NC Solenoid Valve Malfunction	ON	OFF	OFF	(see page 19-66)
33	RNO Solenoid Valve Malfunction	ON	OFF	OFF	(see page 19-66)
34	RNC Solenoid Valve Malfunction	ON	OFF	OFF	(see page 19-66)
35	NO Solenoid Valve Duty Limit Out	ON	OFF	OFF	(see page 19-67)
36	NC Solenoid Valve Duty Limit Out	ON	OFF	OFF	(see page 19-67)
37	RNO Solenoid Valve Duty Limit Out	ON	OFF	OFF	(see page 19-67)
38	RNC Solenoid Valve Duty Limit Out	ON	OFF	OFF	(see page 19-67)
41	Accumulator Stored Pressure Low	ON	OFF	OFF	(see page 19-68)
42	Regulator Malfunction	ON	OFF	OFF	(see page 19-69)
43	Master Cylinder Malfunction	ON	OFF	OFF	(see page 19-69)
44	Partial Brake Pedal Stroke Sensor Malfunction	ON	OFF	OFF	(see page 19-70)
45	Relation of Brake Pedal Stroke Sensor and PMC Sensor Malfunction	ON	OFF	OFF	(see page 19-70)
46	Relation of Brake Pedal Stroke Sensor and PREG Sensor Malfunction	ON	OFF	OFF	(see page 19-71)
47	Relation of PMC Sensor and PREG Sensor Malfunction	ON	OFF	OFF	(see page 19-72)
51	Motor Circuit ON	ON	ON/OFF	ON/OFF	(see page 19-72)
52	Motor Circuit OFF	ON	ON/OFF	ON/OFF	(see page 19-73)
54	Fail-safe Relay Malfunction	ON	OFF	OFF	(see page 19-73)
61	Control Unit Low Voltage	ON	ON/OFF	ON/OFF	(see page 19-74)
62	Control Unit High Voltage	ON	OFF	OFF	(see page 19-76)
63	Back Up Circuit Voltage Malfunction	ON	ON	ON/OFF	(see page 19-76)
64	Brake Pedal Stroke Sensor, PREG Sensor and PMC Sensor Voltage Malfunction	ON	OFF	OFF	(see page 19-78)
65	Control Unit Circuit Stuck ON	ON	OFF	OFF	(see page 19-79)
66	Control Unit Circuit Stuck OFF	ON	OFF	OFF	(see page 19-80)
67	IG1 Voltage Malfunction	ON	OFF	OFF	(see page 19-80)
68	IG2 Voltage Malfunction	ON	OFF	OFF	(see page 19-81)
71	Brake Pedal Position Switch Stuck ON	ON	OFF	OFF	(see page 19-82)
72	Brake Pedal Position Switch Stuck OFF	ON	OFF	OFF	(see page 19-82)
73	Brake Fluid Level Switch Malfunction	ON	OFF	OFF	(see page 19-83)
81	Control Unit Internal Main Circuit Malfunction	ON	ON/OFF	ON/OFF	(see page 19-84)
82	Control Unit Internal Subcircuit Malfunction	ON	ON/OFF	ON/OFF	(see page 19-84)
83	F-CAN Malfunction	ON	ON	OFF	(see page 19-84)
84	Sensor 0 (Zero) Position not Memorized	ON	OFF	OFF	(see page 19-85)
86	F-CAN Malfunction (Bus-off, Communication)	ON	OFF	OFF	(see page 19-85)

Symptom Troubleshooting Index

When the vehicle has one of these symptoms, check for a diagnostic trouble code (DTC) with the HDS. If there is no DTC, do the diagnostic procedure for the symptom, in the sequence listed, until you find the case.

Symptom	Diagnostic procedure
HDS does not communicate with the servo unit or the vehicle	Troubleshoot the DLC circuit (see page 11-213).
AHB indicator and brake system indicator do not come on	1. Do the gauge control module troubleshooting (see page 22-223). 2. Substitute a known-good servo unit, then recheck. If it is OK, replace the original servo unit (see page 19-100).
AHB indicator does not go off, and no DTCs are stored	1. Symptom troubleshooting (see page 19-88). 2. Do the gauge control module troubleshooting (see page 22-223).
Brake system indicator comes on when the brake pedal is pressed, then goes off suddenly (check while pressing the brake pedal for several seconds)	Substitute a known-good accumulator, then recheck. If it is OK, replace the original accumulator (see page 19-107).
Brake system indicator comes on while the brake pedal is pressed, and goes off when the brake pedal is released (check after pressing the brake pedal several seconds)	Substitute a known-good servo unit, then recheck. If it is OK, replace the original servo unit (see page 19-100).
Buzzer does not sound (during the buzzer test)	Symptom troubleshooting (see page 19-91).
Buzzer sounds continually	Symptom troubleshooting (see page 19-94).

HONDA

System Description

Servo Unit Inputs and Outputs for 25P Connector (Connector Disconnected)

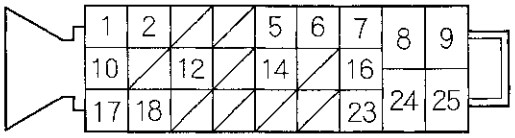

Wire side of female terminals

Terminal number	Wire color	Terminal sign	Description	Signal
1	WHT	CAN-H	F-CAN communication circuit	——
2	RED	SVccA	Detects brake pedal stroke sensor signal	
5	GRN	BUZZER	Detects buzzer signal	
6	BRN	IG2	Power source for activating the system	With ignition switch ON (II): battery voltage (about 12 V)
7	BLK	GND2	Ground for the servo unit	Continuity to ground
8	WHT	MS +B	Power source for the fail-safe relay	Battery voltage (about 12 V) at all times
9	RED	MR +B	Power source for the motor relay	Battery voltage (about 12 V) at all times
10	LT BLU	K-LINE	Communications with HDS	——
12	BLU	BS +B	Power source for activating the system	Battery voltage (about 12 V) at all times
14	BLU	BPS	Detects brake pedal stroke sensor signal	——
16	YEL*1 GRY*2	IG1	Power source for activating the system	With ignition switch ON (II): battery voltage (about 12 V)
17	RED	CAN-L	F-CAN communication circuit	——
18	GRY	SGNDA	Ground for the brake pedal stroke sensor	——
23	BLK	GND3	Ground for the servo unit	Continuity to ground
24	BLK	GND1	Ground for the servo unit	Continuity to ground
25	WHT	MOT (+)	Power source for power unit	——

*1: '06 model
*2: '07-09 models

(cont'd)

System Description (cont'd)

System Communication

The advanced hydraulic booster system has a quick-reacting servo unit and a power unit functioning as a brake booster. This makes it possible to stabilize the braking power while the auto idle stop is operating. This system can raise the brake fluid pressure control quickly, and it works in conjunction with the other systems.

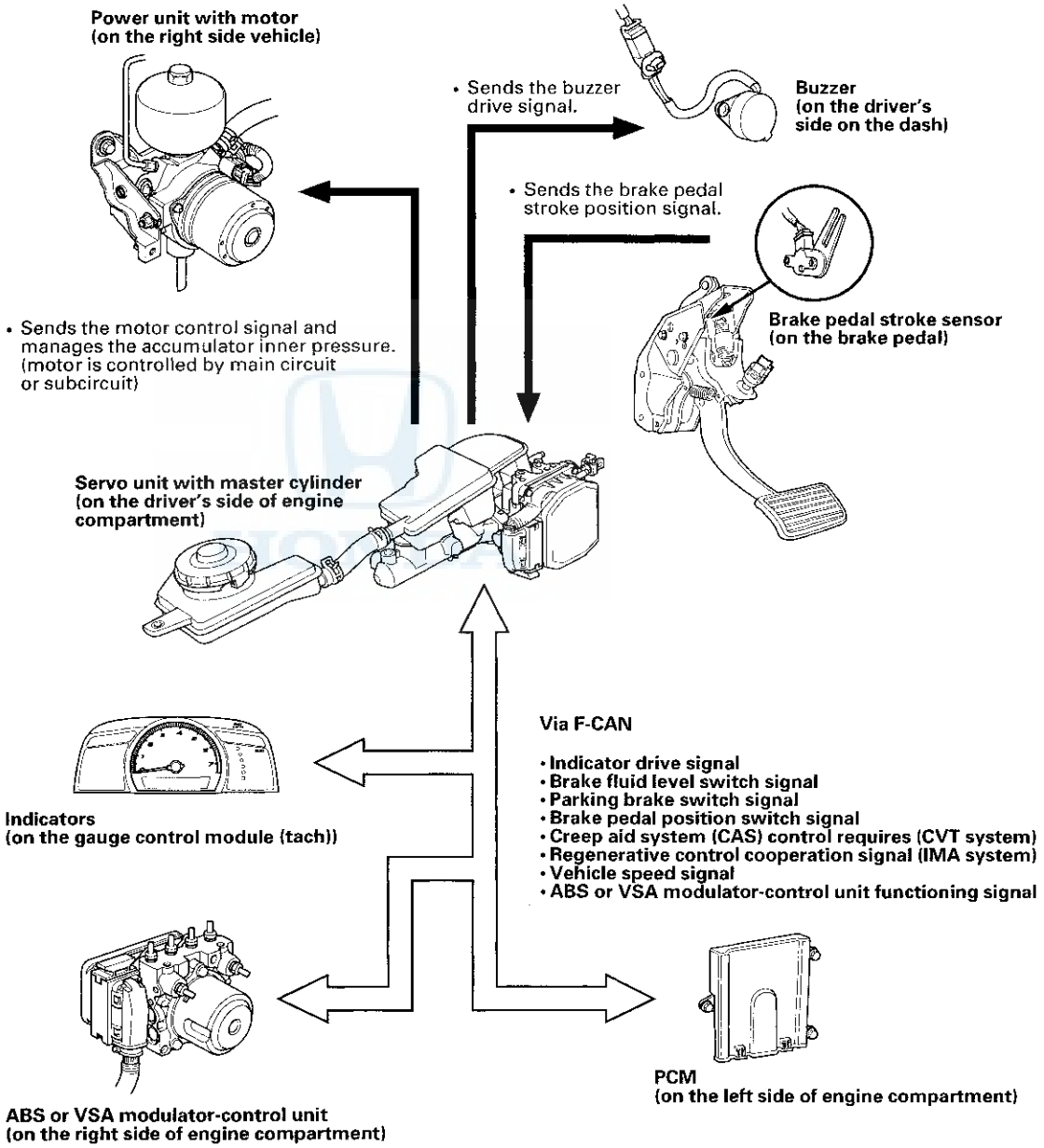

Servo Unit Internal Construction

The servo unit has mechanical and electrical components.

- ECU (electronic control unit)
- Mechanical valves: mechanical IN (inlet) valve, mechanical OUT (outlet) valve.
- Solenoid valves: NO *1, NC *2, RNO *1, RNC *2
- Pressure sensors: PMC sensor, PACC sensor, PREG sensor.

* 1: Normally open
* 2: Normally closed

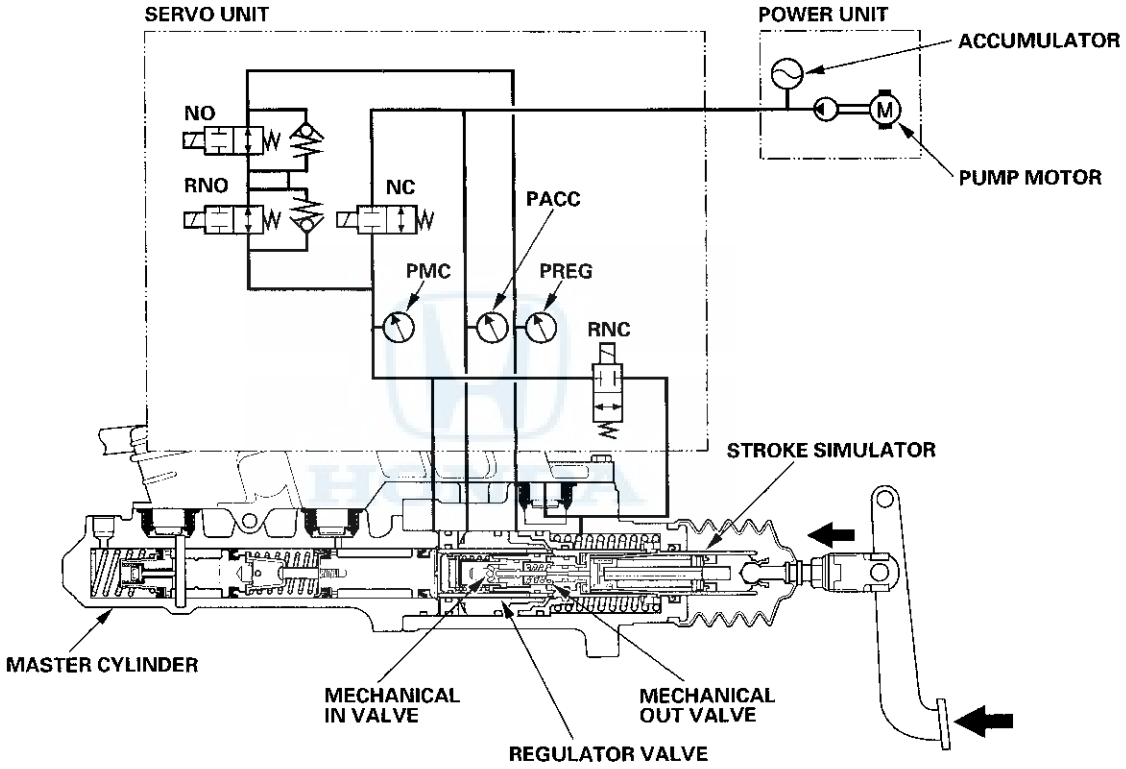

ECU (electronic control unit)
The ECU monitors the pressure in the servo unit and feedback from other system controls.

(cont'd)

System Description (cont'd)

Mechanical Valves for Conventional Brake Operations
When the brake pedal is pressed, force is applied to the regulator valve through the compressed spring, the bushing, and the stroke simulator.
The regulator valve applies accumulator pressure to the master cylinder in proportion to the brake pedal stroke.
The mechanical IN valve and the mechanical OUT valve in the regulator valve are operated by the conventional brake.
The hydraulic control has three operations: Pressure intensifying, pressure retaining, and pressure reducing.

Operation	Mechanical Valve	
	IN	OUT
Pressure Intensifying	Open	Closed
Pressure Retaining	Closed	Closed
Pressure Reducing	Closed	Open

NOTE: If the power unit has a problem, and the accumulator pressure (PACC) is low or depleted, the normal brake system is affected. The primary and the secondary pistons in the master cylinder are pushed by the brake pedal without assist from the booster.

Solenoid Valves for Master Cylinder Electrical Controls
The pressure to the master cylinder is controlled by four solenoid valves.
The solenoid valves control these operations: Regenerate cooperation control, CAS control, brake assist control.

Control	Solenoid Valve			
	NO	NC	RNO	RNC
Regenerate Cooperation Control	——	——	Linear Control	Linear Control
CAS Control	Linear Control	——	——	——
Brake Assist Control	Linear Control	Linear Control	——	——

Pressure Sensors
The servo unit monitors the master cylinder pressure (PMC), the accumulator pressure (PACC), and the regulator pressure (PREG) with independent pressure sensors that send feedback to the CPU.

NOTE: The regulator pressure sensor recognizes brake pedal operation. The brake pedal stroke sensor checks for regulator pressure sensor or servo unit CPU malfunctions.

Servo Unit Electronic Control

The servo unit has a ECU (electronic control unit) that does these functions:

- Checks for system failures.
- Controls the motor on the power unit.
- Controls the indicators.
- Controls the buzzer.
- Receives the brake pedal stroke sensor signal.
- Creep aid system (CAS), in conjunction with the PCM (CVT system).
- Controls the regenerative system in conjunction with the PCM (IMA system).
- Brake assist.
- Receives the pressure sensors signal.

Safety Structure of Motor Control
The pump motor is operated by the servo unit. The servo unit has independent main activation and subactivation circuits in the ECU (electronic control unit). If either circuit has a problem, the other one will run the pump motor.

Creep Aid System (CAS)
The CAS keeps the brakes applied when CVT control requires it during auto idle stop. This prevents the vehicle from rolling forward or backward while the driver releases the brake pedal (to press the accelerator pedal) and the engine starts. When the CVT requires the CAS function, the servo unit operates the solenoid valves to maintain the brake fluid pressure to the master cylinder. The brake fluid pressure is reduced gradually while the solenoid valves in the servo unit are operating.
After the engine starts and the brake pedal is released, the CVT no longer requires the CAS.

Regenerative Control Cooperation
When the driver decelerates or stops by pressing the brake pedal, the servo unit communicates with the PCM to control the balance between the regenerative control and the normal brake system.
In this case, the brake pedal reaction force is the same as a conventional brake system, and the driver is unaware of these controls.

Brake Assist
When the driver does emergency braking the servo unit senses the quick rise in the brake pressure. In this case, the servo unit adds pressure to the inner cylinder, and assists the brake pedal application for the driver.
This control ends at the end of the brake application, when the vehicle stops, the brake pedal is released, or if the system has a problem.

Advanced Hydraulic Booster

Circuit Diagram

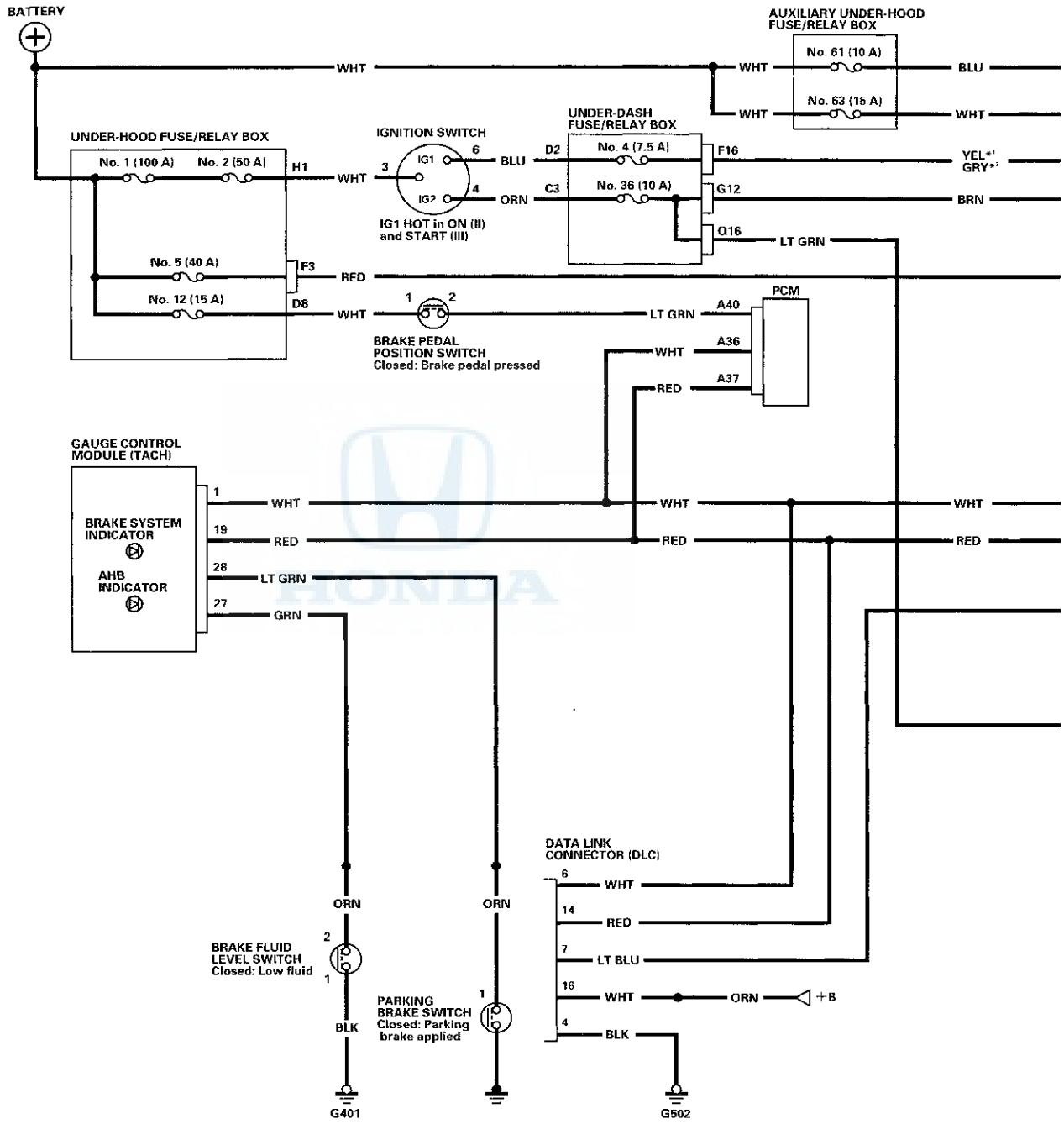

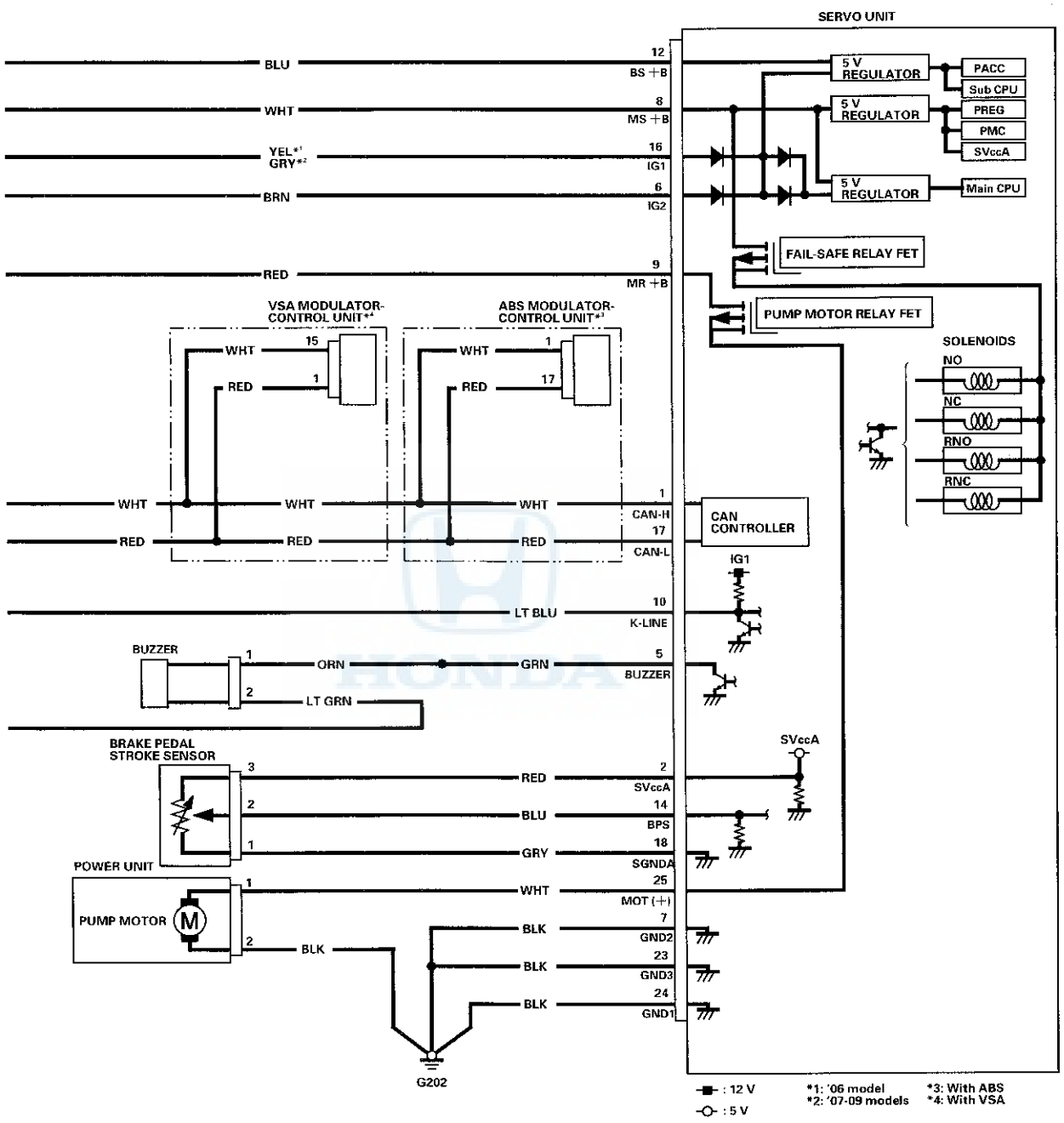
SERVO UNIT
BLU
12
BS +B
WHT
8
MS +B
YEL*1
GRY*2
16
IG1
BRN
6
IG2
RED
9
MR +B
5 V REGULATOR
5 V REGULATOR
5 V REGULATOR
PACC
Sub CPU
PREG
PMC
SVccA
Main CPU
FAIL-SAFE RELAY FET
PUMP MOTOR RELAY FET
VSA MODULATOR-CONTROL UNIT*4
ABS MODULATOR-CONTROL UNIT*3
WHT
15
RED
1
WHT
1
RED
17
SOLENOIDS
NO
NC
RNO
RNC
WHT
WHT
WHT
1
CAN-H
RED
RED
RED
17
CAN-L
CAN CONTROLLER
IG1
LT BLU
10
K-LINE
BUZZER
1
ORN
GRN
5
BUZZER
2
LT GRN
BRAKE PEDAL STROKE SENSOR
3
RED
2
SVccA
SVccA
2
BLU
14
BPS
1
GRY
18
SGNDA
POWER UNIT
1
WHT
25
MOT (+)
PUMP MOTOR
M
2
BLK
BLK
7
GND2
BLK
23
GND3
BLK
24
GND1
G202
: 12 V
: 5 V
*1: '06 model
*2: '07-09 models
*3: With ABS
*4: With VSA

(cont'd)

Circuit Diagram (cont'd)

UNDER-HOOD FUSE/RELAY BOX CONNECTOR F (20P)

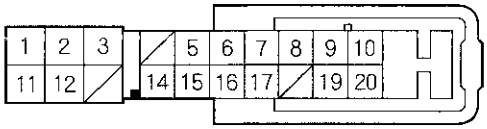

BRAKE FLUID LEVEL SWITCH 2P CONNECTOR

UNDER-DASH FUSE/RELAY BOX CONNECTOR Q (16P)

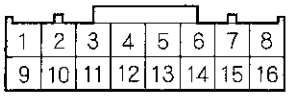

BRAKE PEDAL POSITION SWITCH 4P CONNECTOR

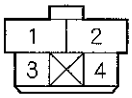

BUZZER 2P CONNECTOR

UNDER-DASH FUSE/RELAY BOX CONNECTOR F (34P)

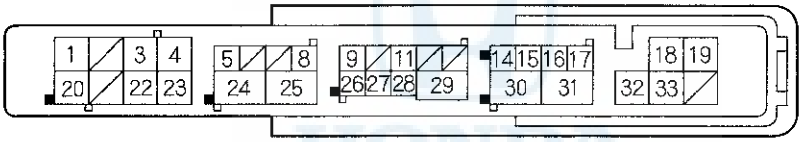

BRAKE PEDAL STROKE SENSOR 3P CONNECTOR

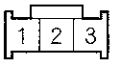

UNDER-DASH FUSE/RELAY BOX CONNECTOR G (21P)

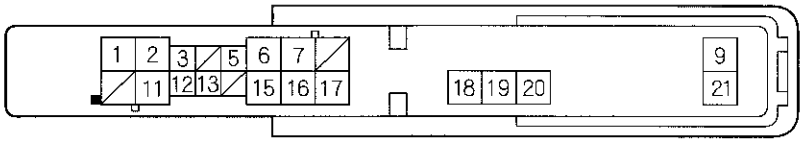

POWER UNIT 2P CONNECTOR

SERVO UNIT 25P CONNECTOR

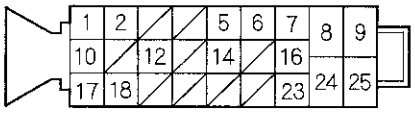

Wire side of female terminals

GAUGE CONTROL MODULE (TACH) 36P CONNECTOR

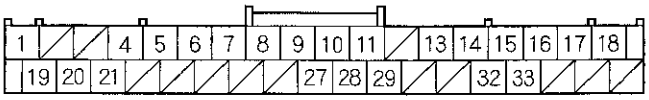

ABS MODULATOR-CONTROL UNIT 25P CONNECTOR (With ABS)

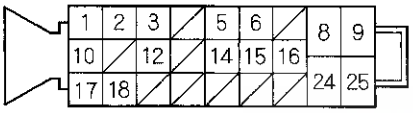

VSA MODULATOR-CONTROL UNIT 37P CONNECTOR (With VSA)

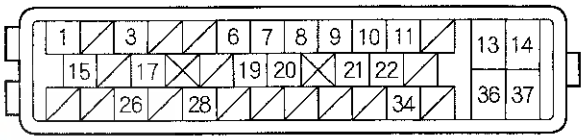

Wire side of female terminals

PCM CONNECTOR A (44P)

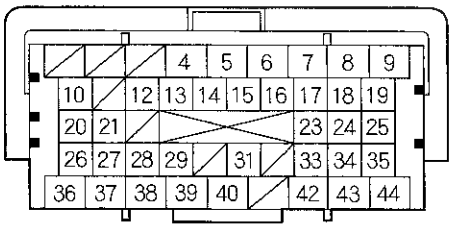

DATA LINK CONNECTOR (DLC)

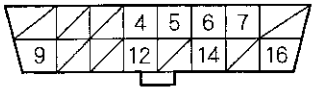

Terminal side of female terminals

DTC Troubleshooting

DTC 11: Motor Lock and Circuit Malfunction

DTC 12: Motor Voltage Malfunction 1

DTC 13: Motor Voltage Malfunction 2

1. Turn the ignition switch to ON (II).
2. Clear the DTC with the HDS.
3. Turn the ignition switch to LOCK (0), then turn it to ON (II) again.
4. Check for DTCs with the HDS.

   Is DTC 11, 12, or 13 indicated?

   YES—Go to step 5.

   NO—Intermittent failure, the system is OK at this time. Check for loose terminals at the power unit 2P connector and the servo unit 25P connector. Refer to intermittent failures troubleshooting (see page 19-46). ■

5. Turn the ignition switch to LOCK (0).
6. Check the No. 5 (40 A) fuse in the under-hood fuse/relay box.

   Is the fuse blown?

   YES—Go to step 7.

   NO—Reinstall the checked fuse, then go to step 14.

7. Disconnect the servo unit 25P connector (see step 13 on page 19-101).
8. Check for continuity between servo unit 25P connector terminal No. 9 and body ground.

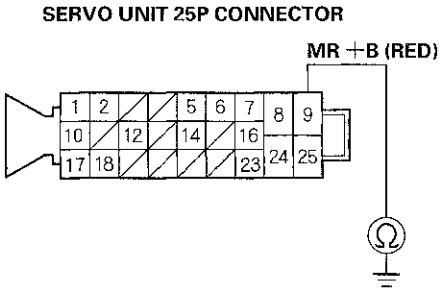

Wire side of female terminals

   Is there continuity?

   YES—Repair short to body ground in the wire between the No. 5 (40 A) fuse and the servo unit. ■

   NO—Install a new No. 5 (40 A) fuse in the under-hood fuse/relay box, then go to step 9.

9. Reconnect the servo unit 25P connector.
10. Turn the ignition switch to ON (II).
11. Clear the DTC with the HDS.
12. Turn the ignition switch to LOCK (0), then turn it to ON (II) again.
13. Check for DTCs with the HDS.

    Is DTC 11, 12, or 13 indicated?

    YES—Replace the servo unit (see page 19-100). ■

    NO—Troubleshooting is complete. ■

14. Disconnect the servo unit 25P connector (see step 13 on page 19-101).

15. Measure the voltage between servo unit 25P connector terminal No. 9 and body ground.

SERVO UNIT 25P CONNECTOR

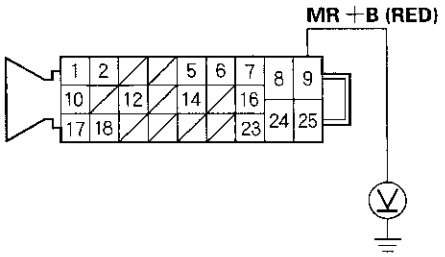

Wire side of female terminals

Is there battery voltage?

YES—Go to step 16.

NO—Repair open in the wire between the No. 5 (40 A) fuse in the under-hood fuse/relay box and the servo unit. ■

16. Check for continuity between servo unit 25P connector terminal No. 25 and body ground.

SERVO UNIT 25P CONNECTOR

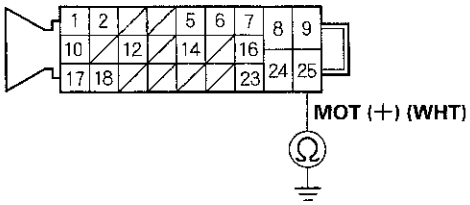

Wire side of female terminals

Is there continuity?

YES—Go to step 17.

NO—Go to step 19.

17. Disconnect the power unit 2P connector.

18. Check for continuity between power unit 2P connector terminal No. 1 and body ground.

POWER UNIT 2P CONNECTOR

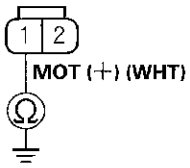

Wire side of female terminals

Is there continuity?

YES—Repair short to body ground in the wire between the power unit and the servo unit. ■

NO—Replace the power unit (see page 19-105). ■

(cont'd)

DTC Troubleshooting (cont'd)

19. Check for continuity between power unit 2P connector terminal No. 1 and servo unit 25P connector terminal No. 25.

SERVO UNIT 25P CONNECTOR
Wire side of female terminals

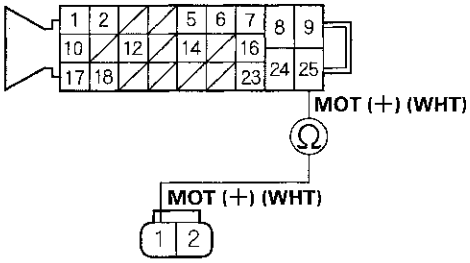

POWER UNIT 2P CONNECTOR
Wire side of female terminals

Is there continuity?

YES—Go to step 20.

NO—Repair open in the wire between the power unit and the servo unit.■

20. Check for continuity between power unit 2P connector terminal No. 2 and body ground.

POWER UNIT 2P CONNECTOR

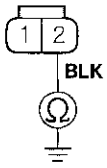

Wire side of female terminals

Is there continuity?

YES—Replace the servo unit (see page 19-100).■

NO—Repair open in the wire between the power unit and the body ground (G202).■

DTC 14: Motor Stuck ON

1. Turn the ignition switch to ON (II).
2. Clear the DTC with the HDS.
3. Turn the ignition switch to LOCK (0), then turn it to ON (II) again.
4. Wait at least 2 minutes.
5. Check for DTCs with the HDS.

   Is DTC 14 indicated?

   YES—Go to step 6.

   NO—Intermittent failure, the system is OK at this time. Check for loose terminals at the servo unit 25P connector. Refer to intermittent failures troubleshooting (see page 19-46). ■

6. Turn the ignition switch to LOCK (0).
7. Check for brake fluid leakage at the servo unit and the power unit hose and line joints (see page 19-34).

   Is there a fluid leak?

   YES—Repair the brake fluid leak (see page 19-34). ■

   NO—Go to step 8.

8. Turn the ignition switch to ON (II).
9. Clear the DTC with the HDS.
10. Turn the ignition switch to LOCK (0), then press the brake pedal 20 times.
11. Turn the ignition switch to ON (II).
12. Wait at least 2 minutes.
13. Check for DTCs with the HDS.

    Is DTC 14 indicated?

    YES—Replace the servo unit (see page 19-100). ■

    NO—If DTC 11 is indicated, do the DTC 11 troubleshooting first (see page 19-60). If no DTC are indicated the system is OK at this time. Check for loose terminals at the servo unit. ■

DTC Troubleshooting (cont'd)

DTC 21: PACC Sensor Malfunction

DTC 22: PREG Sensor Malfunction

DTC 23: PMC Sensor Malfunction

1. Turn the ignition switch to ON (II).
2. Clear the DTC with the HDS.
3. With the ignition switch in ON (II), press the brake pedal several times.
4. Check for DTCs with the HDS.

   Is DTC 21, 22, or 23 indicated?

   YES—Replace the servo unit (see page 19-100). ■

   NO—Intermittent failure, the system is OK at this time. Check for loose terminals at the servo unit 25P connector. Refer to intermittent failures troubleshooting (see page 19-46). ■

DTC 24: Brake Pedal Stroke Sensor Malfunction

1. Turn the ignition switch to ON (II).
2. Clear the DTC with the HDS.
3. With the ignition switch in ON (II), press the brake pedal several times.
4. Check for DTCs with the HDS.

   Is DTC 24 indicated?

   YES—Go to step 5.

   NO—Intermittent failure, the system is OK at this time. Check for loose terminals at the brake pedal stroke sensor 3P connector and the servo unit 25P connector. Refer to intermittent failures troubleshooting (see page 19-46). ■

5. Turn the ignition switch to LOCK (0).

6. Check the brake pedal stroke sensor and its connector for damage and proper installation (see page 19-109).

   Is the brake pedal stroke sensor installation OK?

   YES—Go to step 7.

   NO—Reinstall the brake pedal stroke sensor, and check the mounting position (see page 19-109). ■

7. Disconnect the brake pedal stroke sensor 3P connector.

8. Disconnect the servo unit 25P connector (see step 13 on page 19-101).

9. Check for continuity between servo unit 25P connector terminals No. 2, No. 14, No. 18, and brake pedal stroke sensor 3P connector terminals No. 3, No. 2, No. 1 individually.

SERVO UNIT 25P CONNECTOR
Wire side of female terminals

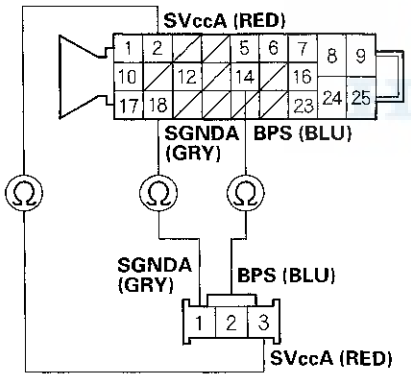

BRAKE PEDAL STROKE SENSOR 3P CONNECTOR
Wire side of female terminals

   Is there continuity?

   YES—Go to step 10.

   NO—Repair open in the wire between the brake pedal stroke sensor and the servo unit. ■

10. Substitute a known-good brake pedal stroke sensor (see page 19-109).

11. Turn the ignition switch to ON (II).

12. Clear the DTC with the HDS.

13. With the ignition switch in ON (II), press the brake pedal several times.

14. Check for DTCs with the HDS.

    Is DTC 24 indicated?

    YES—Replace the servo unit (see page 19-100). ■

    NO—Replace the original brake pedal stroke sensor (see page 19-109). ■

DTC Troubleshooting (cont'd)

DTC 31: NO Solenoid Valve Malfunction

DTC 32: NC Solenoid Valve Malfunction

1. Turn the ignition switch to ON (II).
2. Clear the DTC with the HDS.
3. Turn the ignition switch to LOCK (0), then turn it to ON (II) again.
4. Check for DTCs with the HDS.

   Is DTC 31 or 32 indicated?

   YES—Replace the servo unit (see page 19-100). ■

   NO—Go to step 5.

5. Do the INCREASING MASTER CYLINDER PRESSURE TEST in the FUNCTION TEST with the HDS.

   Does the valve operate?

   YES—Intermittent failure, the system is OK at this time. Check for loose terminals at the servo unit 25P connector. Refer to intermittent failures troubleshooting (see page 19-46). ■

   NO—Replace the servo unit (see page 19-100). ■

DTC 33: RNO Solenoid Valve Malfunction

DTC 34: RNC Solenoid Valve Malfunction

1. Turn the ignition switch to ON (II).
2. Clear the DTC with the HDS.
3. Turn the ignition switch to LOCK (0), then turn it to ON (II) again.
4. Check for DTCs with the HDS.

   Is DTC 33 or 34 indicated?

   YES—Replace the servo unit (see page 19-100). ■

   NO—Go to step 5.

5. Do the REGENERATIVE BRAKE TEST in the FUNCTION TEST with the HDS.

   Does the valve operate?

   YES—Intermittent failure, the system is OK at this time. Check for loose terminals at the servo unit 25P connector. Refer to intermittent failures troubleshooting (see page 19-46). ■

   NO—Replace the servo unit (see page 19-100). ■

DTC 35: NO Solenoid Valve Duty Limit Out

DTC 36: NC Solenoid Valve Duty Limit Out

1. Turn the ignition switch to ON (II).
2. Clear the DTC with the HDS.
3. Turn the ignition switch to LOCK (0), then turn it to ON (II) again.
4. Do the INCREASING MASTER CYLINDER PRESSURE TEST in the FUNCTION TEST with the HDS.
5. Check for DTCs with the HDS.

   Is DTC 35 or 36 indicated?

   YES—Replace the servo unit (see page 19-100). ■

   NO—Intermittent failure, the system is OK at this time. Check for loose terminals at the servo unit 25P connector. Refer to intermittent failures troubleshooting (see page 19-46). ■

DTC 37: RNO Solenoid Valve Duty Limit Out

DTC 38: RNC Solenoid Valve Duty Limit Out

1. Turn the ignition switch to ON (II).
2. Clear the DTC with the HDS.
3. Turn the ignition switch to LOCK (0), then turn it to ON (II) again.
4. Do the REGENERATIVE BRAKE TEST in the FUNCTION TEST with the HDS.
5. Check for DTCs with the HDS.

   Is DTC 37 or 38 indicated?

   YES—Replace the servo unit (see page 19-100). ■

   NO—Intermittent failure, the system is OK at this time. Check for loose terminals at the servo unit 25P connector. Refer to intermittent failures troubleshooting (see page 19-46). ■

HONDA

DTC Troubleshooting (cont'd)

DTC 41: Accumulator Stored Pressure Low

1. Check for brake fluid leakage at the servo unit and the power unit (see page 19-34).

   NOTE: Check the high pressure lines for leaks, particularly on the power unit, the servo unit, and the master cylinder.

   Is there a fluid leak?

   YES—Repair the brake fluid leak (see page 19-34). ■

   NO—Go to step 2.

2. Turn the ignition switch to ON (II).
3. Clear the DTC with the HDS.
4. Turn the ignition switch to LOCK (0), then turn it to ON (II) again.
5. Wait at least 2 minutes.
6. Check for DTCs with the HDS.

   Is DTC 41 indicated?

   YES—Go to step 7.

   NO—Intermittent failure, the system is OK at this time. Check for loose terminals at the servo unit 25P connector. Refer to intermittent failures troubleshooting (see page 19-46). ■

7. Turn the ignition switch to LOCK (0).
8. Replace the accumulator (see page 19-107).
9. Turn the ignition switch to ON (II).
10. Clear the DTC with the HDS.
11. Turn the ignition switch to LOCK (0), then turn it to ON (II) again.
12. Wait at least 2 minutes.
13. Check for DTCs with the HDS.

    Is DTC 41 indicated?

    YES—Replace the servo unit (see page 19-100). ■

    NO—The system is OK at this time. ■

DTC 42: Regulator Malfunction

1. Turn the ignition switch to ON (II).
2. Clear the DTC with the HDS.
3. With the ignition switch in ON (II), press the brake pedal several times.
4. Check for DTCs with the HDS.

   Is DTC 42 indicated?

   YES—Replace the servo unit (see page 19-100). ■

   NO—Intermittent failure, the system is OK at this time. Check for loose terminals at the servo unit 25P connector. Refer to intermittent failures troubleshooting (see page 19-46). ■

DTC 43: Master Cylinder Malfunction

1. Turn the ignition switch to ON (II).
2. Clear the DTC with the HDS.
3. With the ignition switch in ON (II), press the brake pedal several times.
4. Check for DTCs with the HDS.

   Is DTC 43 indicated?

   YES—Replace the servo unit (see page 19-100). ■

   NO—Go to step 5.

5. Do the HYDRAULIC BOOSTER CAS TEST in the FUNCTION MENU with the HDS.
6. Check for DTCs with the HDS.

   Is DTC 43 indicated?

   YES—Replace the servo unit (see page 19-100). ■

   NO—Intermittent failure, the system is OK at this time. Check for loose terminals at the servo unit 25P connector. Refer to intermittent failures troubleshooting (see page 19-46). ■

HONDA

DTC Troubleshooting (cont'd)

DTC 44: Partial Brake Pedal Stroke Sensor Malfunction

1. Turn the ignition switch to ON (II).
2. Clear the DTC with the HDS.
3. With the ignition switch in ON (II), press the brake pedal several times.
4. Check for DTCs with the HDS.

   Is DTC 44 indicated?

   YES—Go to step 5.

   NO—Intermittent failure, the system is OK at this time. Check for loose terminals at the servo unit 25P connector. Refer to intermittent failures troubleshooting (see page 19-46). ■

5. Turn the ignition switch to LOCK (0).
6. Substitute a known-good brake pedal stroke sensor (see page 19-109).
7. Turn the ignition switch to ON (II).
8. Clear the DTC with the HDS.
9. With the ignition switch in ON (II), press the brake pedal several times.
10. Check for DTCs with the HDS.

    Is DTC 44 indicated?

    YES—Replace the servo unit (see page 19-100). ■

    NO—Replace the original brake pedal stroke sensor (see page 19-109). ■

DTC 45: Relation of Brake Pedal Stroke Sensor and PMC Sensor Malfunction

1. Turn the ignition switch to ON (II).
2. Clear the DTC with the HDS.
3. With the ignition switch in ON (II), press the brake pedal several times.
4. Check for DTCs with the HDS.

   Is DTC 45 indicated?

   YES—Go to step 5.

   NO—Intermittent failure, the system is OK at this time. Check for loose terminals at the servo unit 25P connector. Refer to intermittent failures troubleshooting (see page 19-46). ■

5. Turn the ignition switch to LOCK (0).
6. Substitute a known-good brake pedal stroke sensor (see page 19-109).
7. Turn the ignition switch to ON (II).
8. Clear the DTC with the HDS.
9. With the ignition switch in ON (II), press the brake pedal several times.
10. Check for DTCs with the HDS.

    Is DTC 45 indicated?

    YES—Replace the servo unit (see page 19-100). ■

    NO—Replace the original brake pedal stroke sensor (see page 19-109). ■

DTC 46: Relation of Brake Pedal Stroke Sensor and PREG Sensor Malfunction

1. Turn the ignition switch to ON (II).

2. Clear the DTC with the HDS.

3. With the ignition switch in ON (II), press the brake pedal several times.

4. Check for DTCs with the HDS.

   Is DTC 46 indicated?

   YES—Go to step 5.

   NO—Intermittent failure, the system is OK at this time. Check for loose terminals the brake pedal stroke sensor 3P connector and the servo unit 25P connector. Refer to intermittent failures troubleshooting (see page 19-46). ■

5. Turn the ignition switch to LOCK (0).

6. Substitute a known-good brake pedal stroke sensor (see page 19-109).

7. Turn the ignition switch to ON (II).

8. Clear the DTC with the HDS.

9. With the ignition switch in ON (II), press the brake pedal several times.

10. Check for DTCs with the HDS.

    Is DTC 46 indicated?

    YES—Replace the servo unit (see page 19-100). ■

    NO—Replace the original brake pedal stroke sensor (see page 19-109). ■

HONDA

DTC Troubleshooting (cont'd)

DTC 47: Relation of PMC Sensor and PREG Sensor Malfunction

1. Turn the ignition switch to ON (II).
2. Clear the DTC with the HDS.
3. With the ignition switch in ON (II), press the brake pedal several times.
4. Check for DTCs with the HDS.

   Is DTC 47 indicated?

   YES—Replace the servo unit (see page 19-100). ■

   NO—Intermittent failure, the system is OK at this time. Check for loose terminals at the servo unit 25P connector. Refer to intermittent failures troubleshooting (see page 19-46). ■

DTC 51: Motor Circuit ON

1. Turn the ignition switch to ON (II).
2. Clear the DTC with the HDS.
3. Turn the ignition switch to LOCK (0), press the brake pedal 20 times.
4. Turn the ignition switch to ON (II).
5. Check for DTCs with the HDS.

   Is DTC 51 indicated?

   YES—Replace the servo unit (see page 19-100). ■

   NO—Intermittent failure, the system is OK at this time. Check for loose terminals at the servo unit 25P connector. Refer to intermittent failures troubleshooting (see page 19-46). ■

DTC 52: Motor Circuit OFF

1. Turn the ignition switch to ON (II).
2. Clear the DTC with the HDS.
3. Turn the ignition switch to LOCK (0), then turn it to ON (II) again.
4. Wait until the power unit stops operating (When you hear the motor stop.).
5. Check for DTCs with the HDS.

   Is DTC 52 indicated?

   YES—Replace the servo unit (see page 19-100). ■

   NO—Intermittent failure, the system is OK at this time. Check for loose terminals at the power unit 2P connector and the servo unit 25P connector. Refer to intermittent failures troubleshooting (see page 19-46). ■

DTC 54: Fail-safe Relay Malfunction

1. Turn the ignition switch to ON (II).
2. Clear the DTC with the HDS.
3. Turn the ignition switch to LOCK (0), then turn it to ON (II) again.
4. Check for DTCs with the HDS.

   Is DTC 54 indicated?

   YES—Replace the servo unit (see page 19-100). ■

   NO—Intermittent failure, the system is OK at this time. Check for loose terminals at the servo unit 25P connector. Refer to intermittent failures troubleshooting (see page 19-46). ■

HONDA

DTC Troubleshooting (cont'd)

DTC 61: Control Unit Low Voltage

1. Turn the ignition switch to ON (II).
2. Clear the DTC with the HDS.
3. Start the engine, then wait 10 seconds.
4. Check for DTCs with the HDS.

   Is DTC 61 indicated?

   YES—Go to step 5.

   NO—Intermittent failure, the system is OK at this time. Check for loose terminals at the servo unit 25P connector. Refer to intermittent failures troubleshooting (see page 19-46).■

5. Check the 12 V battery voltage.

   Is the voltage OK?

   YES—Go to step 6.

   NO—Check the 12 V battery performance (see page 22-61), then go to step 1 and recheck.

6. Turn the ignition switch to LOCK (0).
7. Check the No. 63 (15 A) fuse in the auxiliary under-hood fuse/relay box.

   Is the fuse blown?

   YES—Go to step 8.

   NO—Reinstall the checked fuse, then go to step 15.

8. Disconnect the servo unit 25P connector (see step 13 on page 19-101).
9. Check for continuity between servo unit 25P connector terminal No. 8 and body ground.

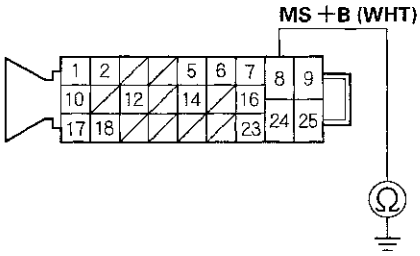

Wire side of female terminals

   Is there continuity?

   YES—Repair short to body ground in the wire between the No. 63 (15 A) fuse and the servo unit.■

   NO—Install a new No. 63 (15 A) fuse in the auxiliary under-hood fuse/relay box, then go to step 10.

10. Reconnect the servo unit 25P connector.
11. Turn the ignition switch to ON (II).
12. Clear the DTC with the HDS.
13. Start the engine, then wait 10 seconds.
14. Check for DTCs with the HDS.

    Is DTC 61 indicated?

    YES—Replace the servo unit (see page 19-100).■

    NO—Troubleshooting is complete.■

15. Check the No. 61 (10 A) fuse in the auxiliary under-hood fuse/relay box.

    Is the fuse blown?

    YES—Go to step 16.

    NO—Reinstall the checked fuse, then go to step 23.

16. Disconnect the servo unit 25P connector (see step 13 on page 19-101).

17. Check for continuity between servo unit 25P connector terminal No. 12 and body ground.

SERVO UNIT 25P CONNECTOR

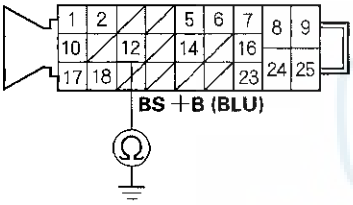

Wire side of female terminals

Is there continuity?

YES—Repair short to body ground in the wire between the No. 61 (10 A) fuse and the servo unit. ■

NO—Install a new No. 61 (10 A) fuse in the auxiliary under-hood fuse/relay box, then go to step 18.

18. Reconnect the servo unit 25P connector.

19. Turn the ignition switch to ON (II).

20. Clear the DTC with the HDS.

21. Start the engine, then wait 10 seconds.

22. Check for DTCs with the HDS.

    Is DTC 61 indicated?

    YES—Replace the servo unit (see page 19-100). ■

    NO—Troubleshooting is complete. ■

23. Disconnect the servo unit 25P connector (see step 13 on page 19-101).

24. Measure the voltage between body ground and servo unit 25P connector terminals No. 8 and No. 12 individually.

SERVO UNIT 25P CONNECTOR

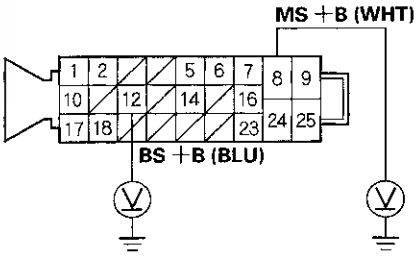

Wire side of female terminals

Is there battery voltage?

YES—Replace the servo unit (see page 19-100). ■

NO—Repair open in the wire between the No. 63 (15 A) fuse or the No. 61 (10 A) fuse and the servo unit. ■

DTC Troubleshooting (cont'd)

DTC 62: Control Unit High Voltage

1. Turn the ignition switch to ON (II).
2. Clear the DTC with the HDS.
3. Start the engine, then wait 10 seconds.
4. Check for DTCs with the HDS.

   Is DTC 62 indicated?

   YES—Go to step 5.

   NO—Intermittent failure, the system is OK at this time. Check for loose terminals at the servo unit 25P connector. Refer to intermittent failures troubleshooting (see page 19-46). ■

5. Check the 12 V battery voltage.

   Is the voltage OK?

   YES—Replace the servo unit (see page 19-100). ■

   NO—Do the charging system indicator circuit troubleshooting (see page 12-179), then go to step 1 and recheck.

DTC 63: Back Up Circuit Voltage Malfunction

1. Turn the ignition switch to ON (II).
2. Clear the DTC with the HDS.
3. Turn the ignition switch to LOCK (0), then turn it to ON (II) again.
4. Check for DTCs with the HDS.

   Is DTC 63 indicated?

   YES—Go to step 5.

   NO—Intermittent failure, the system is OK at this time. Check for loose terminals at the servo unit 25P connector. Refer to intermittent failures troubleshooting (see page 19-46). ■

5. Turn the ignition switch to LOCK (0).
6. Check the No. 61 (10 A) fuse in the auxiliary underhood fuse/relay box.

   Is the fuse blown?

   YES—Go to step 7.

   NO—Reinstall the checked fuse, then go to step 14.

7. Disconnect the servo unit 25P connector (see step 13 on page 19-101).

8. Check for continuity between servo unit 25P connector terminal No. 12 and body ground.

SERVO UNIT 25P CONNECTOR

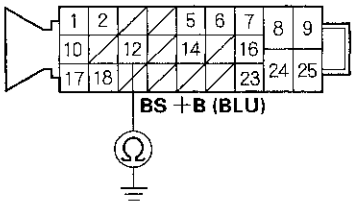

Wire side of female terminals

Is there continuity?

YES—Repair short to body ground in the wire between the No. 61 (10 A) fuse and the servo unit. ■

NO—Install a new No. 61 (10 A) fuse in the auxiliary under-hood fuse/relay box, then go to step 9.

9. Reconnect the servo unit 25P connector.

10. Turn the ignition switch to ON (II).

11. Clear the DTC with the HDS.

12. Turn the ignition switch to LOCK (0), then turn it to ON (II) again.

13. Check for DTCs with the HDS.

Is DTC 63 indicated?

YES—Replace the servo unit (see page 19-100). ■

NO—Troubleshooting is complete. ■

14. Disconnect the servo unit 25P connector (see step 13 on page 19-101).

15. Measure the voltage between servo unit 25P connector terminal No. 12 and body ground.

SERVO UNIT 25P CONNECTOR

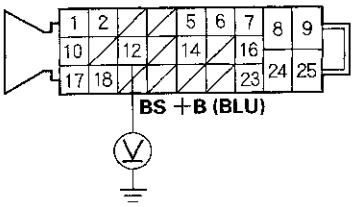

Wire side of female terminals

Is there battery voltage?

YES—Replace the servo unit (see page 19-100). ■

NO—Repair open in the wire between the No. 61 (10 A) fuse and the servo unit. ■

DTC Troubleshooting (cont'd)

DTC 64: Brake Pedal Stroke Sensor, PREG Sensor and PMC Sensor Voltage Malfunction

1. Turn the ignition switch to ON (II).
2. Clear the DTC with the HDS.
3. Turn the ignition switch to LOCK (0), then turn it to ON (II) again.
4. Check for DTCs with the HDS.

   Is DTC 64 indicated?

   YES—Go to step 5.

   NO—Intermittent failure, the system is OK at this time. Check for loose terminals at the servo unit 25P connector. Refer to intermittent failures troubleshooting (see page 19-46). ■

5. Turn the ignition switch to LOCK (0).
6. Disconnect the servo unit 25P connector (see step 13 on page 19-101).
7. Check for continuity between servo unit 25P connector terminal No. 2 and body ground.

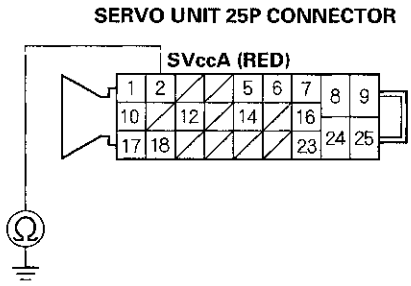

Wire side of female terminals

   Is there continuity?

   YES—Go to step 8.

   NO—Go to step 10.

8. Disconnect the brake pedal stroke sensor 3P connector.
9. Check for continuity between servo unit 25P connector terminal No. 2 and body ground.

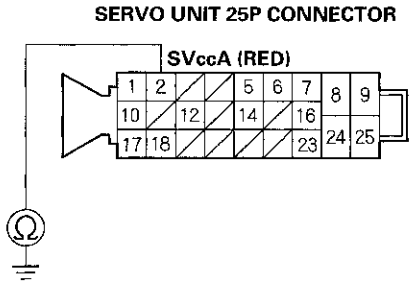

Wire side of female terminals

   Is there continuity?

   YES—Repair short to body ground in the wire between the brake pedal stroke sensor and the servo unit. ■

   NO—Replace the brake pedal stroke sensor (see page 19-109). ■

10. Disconnect the brake pedal stroke sensor 3P connector.

11. Check for continuity between servo unit 25P connector terminals No. 2 and No. 18.

SERVO UNIT 25P CONNECTOR

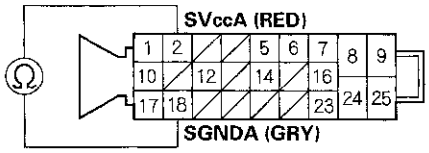

Wire side of female terminals

Is there continuity?

YES—Repair short in the wires between the brake pedal stroke sensor and the servo unit.■

NO—Replace the servo unit (see page 19-100).■

DTC 65: Control Unit Circuit Stuck ON

1. Turn the ignition switch to ON (II).

2. Clear the DTC with the HDS.

3. Turn the ignition switch to LOCK (0), then turn it to ON (II) again.

4. Check for DTCs with the HDS.

Is DTC 65 indicated?

YES—Replace the servo unit (see page 19-100).■

NO—Intermittent failure, the system is OK at this time. Check for loose terminals at the servo unit 25P connector. Refer to intermittent failures troubleshooting (see page 19-46).■

DTC Troubleshooting (cont'd)

DTC 66: Control Unit Circuit Stuck OFF

NOTE: If the battery terminal is disconnected and connected repeatedly, five times or more, while the ignition switch is ON (II), DTC 66 may be indicated.

1. Turn the ignition switch to ON (II).
2. Clear the DTC with the HDS.
3. Turn the ignition switch to ON (II) and to LOCK (0) at least three times.
4. Check for DTCs with the HDS.

   Is DTC 66 indicated?

   YES—Replace the servo unit (see page 19-100).■

   NO—Intermittent failure, the system is OK at this time. Check for loose terminals at the servo unit 25P connector. Refer to intermittent failures troubleshooting (see page 19-46).■

DTC 67: IG1 Voltage Malfunction

1. Turn the ignition switch to LOCK (0).
2. Check the No. 4 (7.5 A) fuse in the under-dash fuse/relay box.

   Is the fuse blown?

   YES—Go to step 8.

   NO—Reinstall the checked fuse, then go to step 3.
3. Check the 12 V battery voltage.

   Is the voltage OK?

   YES—Go to step 4.

   NO—Check the 12 V battery performance (see page 22-61), then go to step 1 and recheck.
4. Turn the ignition switch to ON (II).
5. Clear the DTC with the HDS.
6. Turn the ignition switch to LOCK (0), then turn it to ON (II) again.
7. Check for DTCs with the HDS.

   Is DTC 67 indicated?

   YES—Replace the servo unit (see page 19-100).■

   NO—Intermittent failure, the system is OK at this time. Check for loose terminals at the servo unit 25P connector. Refer to intermittent failures troubleshooting (see page 19-46).■
8. Disconnect the servo unit 25P connector (see step 13 on page 19-101).

9. Check for continuity between servo unit 25P connector terminal No. 16 and body ground.

SERVO UNIT 25P CONNECTOR

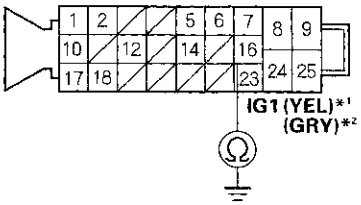

Wire side of female terminals

***1: '06 model**
***2: '07-09 models**

Is there continuity?

YES—Repair short to body ground in the wire between the No. 4 (7.5 A) fuse and the servo unit.■

NO—Install a new No. 4 (7.5 A) fuse in the under-dash fuse/relay box, then go to step 10.

10. Reconnect the servo unit 25P connector.

11. Turn the ignition switch to ON (II).

12. Clear the DTC with the HDS.

13. Turn the ignition switch to LOCK (0), then turn it to ON (II) again.

14. Check for DTCs with the HDS.

Is DTC 67 indicated?

YES—Replace the servo unit (see page 19-100).■

NO—Troubleshooting is complete.■

DTC 68: IG2 Voltage Malfunction

1. Turn the ignition switch to LOCK (0).

2. Check the No. 36 (10 A) fuse in the under-dash fuse/relay box.

Is the fuse blown?

YES—Go to step 8.

NO—Reinstall the checked fuse, then go to step 3.

3. Check the 12 V battery voltage.

Is the voltage OK?

YES—Go to step 4.

NO—Check the 12 V battery performance (see page 22-61), then go to step 1 and recheck.

4. Turn the ignition switch to ON (II).

5. Clear the DTC with the HDS.

6. Turn the ignition switch to LOCK (0), then turn it to ON (II) again.

7. Check for DTCs with the HDS.

Is DTC 68 indicated?

YES—Replace the servo unit (see page 19-100).■

NO—Intermittent failure, the system is OK at this time. Check for loose terminals at the servo unit 25P connector. Refer to intermittent failures troubleshooting (see page 19-46).■

8. Disconnect the servo unit 25P connector (see step 13 on page 19-101).

9. Disconnect the buzzer 2P connector (see page 19-109).

(cont'd)

DTC Troubleshooting (cont'd)

10. Check for continuity between servo unit 25P connector terminal No. 6 and body ground.

SERVO UNIT 25P CONNECTOR

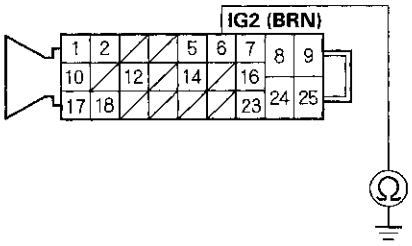

Wire side of female terminals

Is there continuity?

YES—Repair short to body ground in the wire between the No. 36 (10 A) fuse and the buzzer or the servo unit. ■

NO—Install a new No. 36 (10 A) fuse in the under-dash fuse/relay box, then go to step 11.

11. Reconnect the servo unit 25P connector.

12. Reconnect the buzzer 2P connector.

13. Turn the ignition switch to ON (II).

14. Clear the DTC with the HDS.

15. Turn the ignition switch to LOCK (0), then turn it to ON (II) again.

16. Check for DTCs with the HDS.

Is DTC 68 indicated?

YES—Replace the servo unit (see page 19-100). ■

NO—Troubleshooting is complete. ■

DTC 71: Brake Pedal Position Switch Stuck ON

DTC 72: Brake Pedal Position Switch Stuck OFF

1. Check the brake lights while pressing the brake pedal.

Do the brake lights come on when the brake pedal is pressed and go off when the brake pedal is released?

YES—Intermittent failure, the system is OK at this time. ■

NO—Do the brake pedal position switch test (see page 22-168). ■

DTC 73: Brake Fluid Level Switch Malfunction

1. Turn the ignition switch to LOCK (0).

2. Check the brake fluid level in the subreservoir.

   Is brake fluid level OK?

   YES—Go to step 3.

   NO—Do the brake pad inspection: Front (see page 19-12), rear (see page 19-20), check for brake fluid leaks or replace worn pads. Fill the fluid reservoir to the correct level or replace the pads, then go to step 3.

3. Turn the ignition switch to ON (II).

4. Clear the DTC with the HDS.

5. Turn the ignition switch to LOCK (0), then turn it to ON (II) again.

6. Check for DTCs with the HDS.

   Is DTC 73 indicated?

   YES—Go to step 7.

   NO—Intermittent failure, the system is OK at this time. ■

7. Clear the DTC with the HDS.

8. Turn the ignition switch to LOCK (0).

9. Disconnect the brake fluid level switch 2P connector.

10. Disconnect the gauge control module (tach) 36P connector.

11. Check for continuity between brake level switch 2P connector terminal No. 2 and body ground.

BRAKE FLUID LEVEL SWITCH 2P CONNECTOR

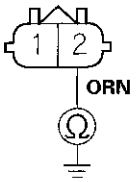

Wire side of female terminals

Is there continuity?

YES—Repair short to body ground in the wire between the gauge control module (tach) and the brake fluid level switch. ■

NO—Replace the subreservoir (brake fluid level switch is included) (see page 19-100). ■

DTC Troubleshooting (cont'd)

DTC 81: Control Unit Internal Main Circuit Malfunction

DTC 82: Control Unit Internal Subcircuit Malfunction

1. Turn the ignition switch to ON (II).
2. Clear the DTC with the HDS.
3. Turn the ignition switch to LOCK (0), then turn it to ON (II) again.
4. Check for DTCs with the HDS.

   Is DTC 81 or 82 indicated?

   YES—Replace the servo unit (see page 19-100). ■

   NO—Intermittent failure, the system is OK at this time. Check for loose terminals at the servo unit 25P connector. Refer to intermittent failures troubleshooting (see page 19-46). ■

DTC 83: F-CAN Malfunction

1. Turn the ignition switch to ON (II).
2. Clear the DTC with the HDS.
3. Turn the ignition switch to LOCK (0), then turn it to ON (II) again.
4. Check for DTCs with the HDS.

   Is DTC 83 indicated?

   YES—Replace the servo unit (see page 19-100). ■

   NO—Intermittent failure, the system is OK at this time. Check for loose terminals at the servo unit 25P connector. Refer to intermittent failures troubleshooting (see page 19-46). ■

DTC 84: Sensor 0 (Zero) Position not Memorized

1. Turn the ignition switch to ON (II).
2. Clear the DTC with the HDS.
3. Do the sensor 0 (zero) position memorization (see page 19-48).

   NOTE: If the memorization process does not work, replace the servo unit (see page 19-100).
4. Turn the ignition switch to LOCK (0), then turn it to ON (II) again.
5. Check for DTCs with the HDS.

   Is DTC 84 indicated?

   YES—Replace the servo unit (see page 19-100). ■

   NO—Troubleshooting is complete. ■

DTC 86: F-CAN Malfunction (Bus-off, Communication)

1. Turn the ignition switch to ON (II).
2. Clear the DTC with the HDS.
3. Turn the ignition switch to LOCK (0), then turn it to ON (II) again.
4. Check for DTCs with the HDS.

   Is DTC 86 indicated?

   YES—Go to step 5.

   NO—Intermittent failure, the system is OK at this time. Check for loose terminals at the gauge control module (tach), the ABS modulator-control unit (if equipped), the PCM, the VSA modulator-control unit (if equipped), and the servo unit. ■
5. Turn the ignition switch to LOCK (0).
6. Short the SCS line with the HDS.
7. Disconnect PCM connector A (44P).
8. Disconnect the servo unit 25P connector (see step 13 on page 19-101).

(cont'd)

DTC Troubleshooting (cont'd)

9. Check for continuity between servo unit 25P connector terminals and PCM connector A (44P) terminals (see table).

Sign	Servo Unit 25P Connector Terminal	PCM Connector A (44P) Terminal
CAN-L	No. 17	No. 37
CAN-H	No. 1	No. 36

SERVO UNIT 25P CONNECTOR
Wire side of female terminals

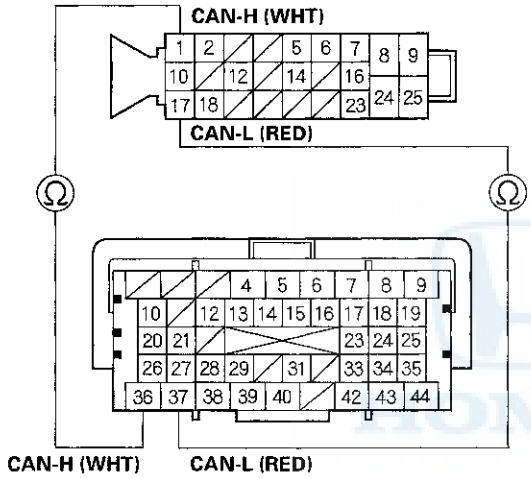

PCM CONNECTOR A (44P)
Terminal side of female terminals

Is there continuity?

YES—Go to step 10.

NO—Repair open in the wire between the PCM and the servo unit.■

10. Disconnect the gauge control module (tach) 36P connector.

11. Check for continuity between servo unit 25P connector terminals and gauge control module (tach) 36P connector terminals (see table).

Sign	Servo Unit 25P Connector Terminal	Gauge Control Module (Tach) 36P Connector Terminal
CAN-L	No. 17	No. 19
CAN-H	No. 1	No. 1

SERVO UNIT 25P CONNECTOR
Wire side of female terminals

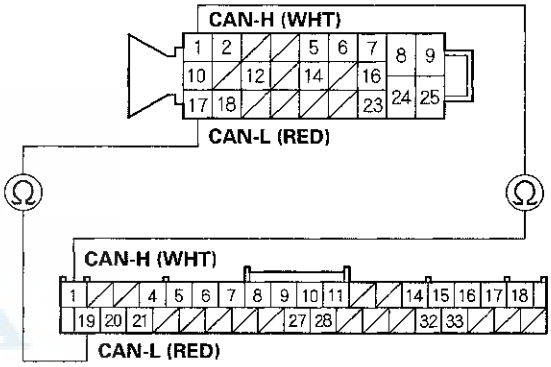

GAUGE CONTROL MODULE (TACH) 36P CONNECTOR
Wire side of female terminals

Is there continuity?

YES—Go to step 12.

NO—Repair open in the wire between the gauge control module (tach) and the servo unit.■

12. Disconnect the ABS modulator-control unit 25P connector (see step 2 on page 19-145) or VSA modulator-control unit 37P connector (see step 2 on page 19-236).

13. Check for continuity between the following servo unit 25P connector terminals and ABS or VSA modulator-control unit terminals (see table).

Sign	Servo Unit 25P Connector Terminal	ABS Modulator-control Unit 25P Connector Terminal	VSA Modulator-control Unit 37P Connector Terminal
CAN-L	No. 17	No. 17	No. 1
CAN-H	No. 1	No. 1	No. 15

With ABS

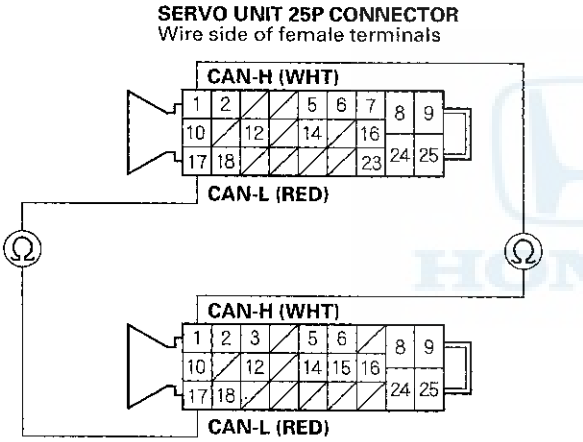

ABS MODULATOR-CONTROL UNIT 25P CONNECTOR
Wire side of female terminals

With VSA

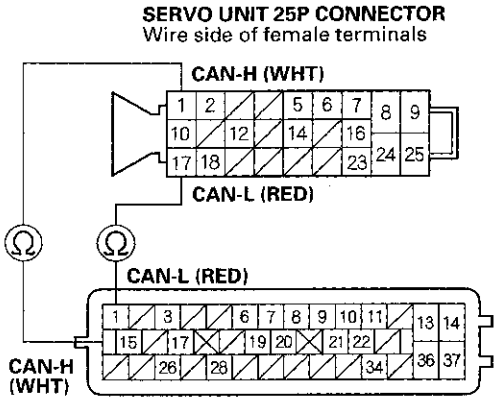

VSA MODULATOR-CONTROL UNIT 37P CONNECTOR
Wire side of female terminals

Is there continuity?

YES—Update the PCM if it does not have the latest softwear (see page 11-236), or substituted a known-good PCM (see page 11-7), then go to step **1**, and recheck. If the PCM was updated and DTCs are not indicated, troubleshooting is complete. If the PCM was substituted and DTCs are not indicated, replace the original PCM (see page 11-238). If DTCs are indicated, replace the servo unit (see page 19-100).

NO—Repair open in the wire between the ABS or VSA modulator-control unit and the servo unit. ■

Symptom Troubleshooting

AHB indicator does not go off, and no DTCs are stored

1. Turn the ignition switch to LOCK (0).
2. Check the No. 63 (15 A) fuse in the auxiliary under-hood fuse/relay box.

   Is the fuse blown?

   YES—Go to step 3.

   NO—Reinstall the checked fuse, then go to step 8.
3. Disconnect the servo unit 25P connector (see step 13 on page 19-101).
4. Check for continuity between servo unit 25P connector terminal No. 8 and body ground.

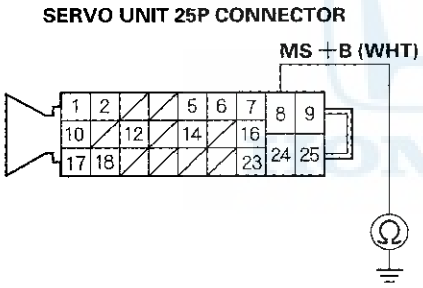

Wire side of female terminals

   Is there continuity?

   YES—Repair short to body ground in the wire between the No. 63 (15 A) fuse and the servo unit. ■

   NO—Install a new No. 63 (15 A) fuse in the auxiliary under-hood fuse/relay box, then go to step 5.
5. Reconnect the servo unit 25P connector.
6. Turn the ignition switch to ON (II).
7. Clear the AHB indicator for several seconds when the ignition switch is turned to ON (II).

   Does the indicator come on then go off?

   YES—Troubleshooting is complete. ■

   NO—Replace the servo unit (see page 19-100). ■
8. Disconnect the servo unit 25P connector (see step 13 on page 19-101).
9. Measure the voltage between servo unit 25P connector terminal No. 8 and body ground.

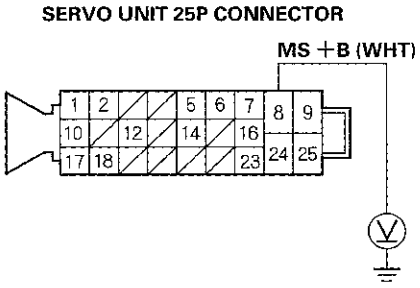

Wire side of female terminals

   Is there battery voltage?

   YES—Go to step 10.

   NO—Repair open in the wire between the No. 63 (15 A) in the auxiliary under-hood fuse/relay box and the servo unit. ■

10. Check the No. 4 (7.5 A) fuse in the under-dash fuse/relay box.

    Is the fuse blown?

    YES—Go to step 11.

    NO—Reinstall the checked fuse, then go to step 15.

11. Check for continuity between servo unit 25P connector terminal No. 16 and body ground.

SERVO UNIT 25P CONNECTOR

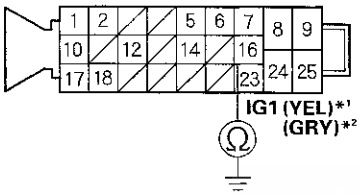

Wire side of female terminals

***1: '06 model**
***2: '07-09 models**

Is there continuity?

YES—Repair short to body ground in the wire between the No. 4 (7.5 A) fuse and the servo unit.■

NO—Install a new No. 4 (7.5 A) fuse in the under-dash fuse/relay box, then go to step 12.

12. Reconnect the servo unit 25P connector.

13. Turn the ignition switch to ON (II).

14. Clear the AHB indicator for several seconds when the ignition switch is turned to ON (II).

    Does the indicator come on then go off?

    YES—Troubleshooting is complete.■

    NO—Replace the servo unit (see page 19-100).■

15. Turn the ignition switch to ON (II).

16. Measure the voltage between servo unit 25P connector terminal No. 16 and body ground.

SERVO UNIT 25P CONNECTOR

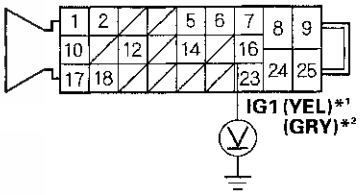

Wire side of female terminals

***1: '06 model**
***2: '07-09 models**

Is there battery voltage?

YES—Go to step 17.

NO—Repair open in the wire between the No. 4 (7.5 A) in the under-dash fuse/relay box and the servo unit.■

17. Turn the ignition switch to LOCK (0).

(cont'd)

Symptom Troubleshooting (cont'd)

18. Check the No. 36 (10 A) fuse in the under-dash fuse/relay box.

    Is the fuse blown?

    YES—Go to step 19.

    NO—Reinstall the checked fuse, then go to step 24.

19. Disconnect the buzzer 2P connector (see page 19-109).

20. Check for continuity between servo unit 25P connector terminal No. 6 and body ground.

SERVO UNIT 25P CONNECTOR

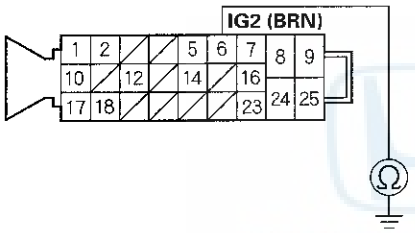

Wire side of female terminals

Is there continuity?

YES—Repair short to body ground in the wire between the No. 36 (10 A) fuse or the buzzer and the servo unit.■

NO—Install a new No. 36 (10 A) fuse in the under-dash fuse/relay box, then go to step 21.

21. Reconnect all connectors.

22. Turn the ignition switch to ON (II).

23. Clear the AHB indicator for several seconds when the ignition switch is turned to ON (II).

    Does the indicator come on then go off?

    YES—Troubleshooting is complete.■

    NO—Replace the servo unit (see page 19-100).■

24. Turn the ignition switch to ON (II).

25. Measure the voltage between servo unit 25P connector terminal No. 6 and body ground.

SERVO UNIT 25P CONNECTOR

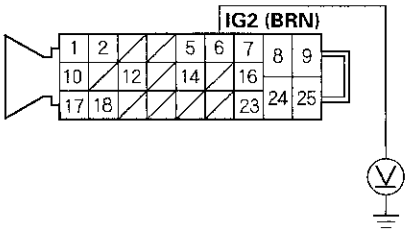

Wire side of female terminals

Is there battery voltage?

YES—Go to step 26.

NO—Repair open in the wire between the No. 36 (10 A) in the under-dash fuse/relay box and the servo unit.■

26. Turn the ignition switch to LOCK (0).

27. Check for continuity between body ground and servo unit 25P connector terminals No. 7, No. 23, and No. 24 individually.

SERVO UNIT 25P CONNECTOR

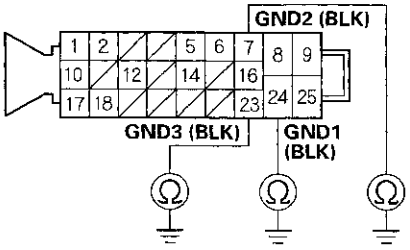

Wire side of female terminals

Is there continuity?

YES—Replace the servo unit (see page 19-100).■

NO—Repair open in the wire between the servo unit and body ground (G202).■

Buzzer does not sound (during the buzzer test)

1. Turn the ignition switch to ON (II).
2. Do the BUZZER ON in the FUNCTION TEST with the HDS.

   Does the buzzer sound?

   YES—The system is OK at this time.■

   NO—Go to step 3.
3. Turn the ignition switch to LOCK (0).
4. Check the No. 36 (10 A) fuse in the under-dash fuse/relay box.

   Is the fuse blown?

   YES—Go to step 5.

   NO—Reinstall the checked fuse, then go to step 11.
5. Disconnect the buzzer 2P connector (see page 19-109).
6. Disconnect the servo unit 25P connector (see step 13 on page 19-101).

(cont'd)

Symptom Troubleshooting (cont'd)

7. Check for continuity between buzzer 2P connector terminal No. 2 and body ground.

BUZZER 2P CONNECTOR

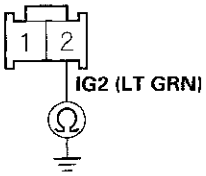

Wire side of female terminals

Is there continuity?

YES—Repair short to body ground in the wire between the No. 36 (10 A) fuse or the buzzer and the servo unit.■

NO—Install a new No. 36 (10 A) fuse in the under-dash fuse/relay box, then go to step 8.

8. Reconnect all connectors.

9. Turn the ignition switch to ON (II).

10. Do the BUZZER ON in the FUNCTION TEST with the HDS.

Does the buzzer sound?

YES—Troubleshooting is complete.■

NO—Replace the buzzer (see page 19-109).■

11. Disconnect the buzzer 2P connector (see page 19-109).

12. Turn the ignition switch to ON (II).

13. Measure the voltage between buzzer 2P connector terminal No. 2 and body ground.

BUZZER 2P CONNECTOR

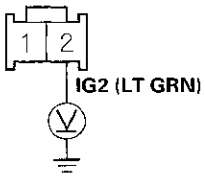

Wire side of female terminals

Is there battery voltage?

YES—Go to step 14.

NO—Repair open in the wire between the No. 36 (10 A) in the under-dash fuse/relay box and the buzzer.■

14. Turn the ignition switch to LOCK (0).

15. Disconnect the servo unit 25P connector (see step 13 on page 19-101).

16. Check for continuity between buzzer 2P connector terminal No. 1 and servo unit 25P connector terminal No. 5.

SERVO UNIT 25P CONNECTOR
Wire side of female terminals

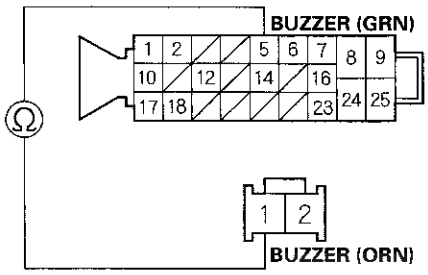

BUZZER 2P CONNECTOR
Wire side of female terminals

Is there continuity?

YES—Go to step 17.

NO—Repair open in the wire between the buzzer and the servo unit.■

17. Reconnect all connectors.

18. Turn the ignition switch to ON (II).

19. Connect buzzer 2P connector terminal No. 1 to body ground with a jumper wire.

BUZZER 2P CONNECTOR

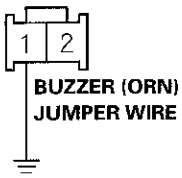

Wire side of female terminals

Does the buzzer sound?

YES—Replace the servo unit (see page 19-100).■

NO—Replace the buzzer (see page 19-109).■

Symptom Troubleshooting (cont'd)

Buzzer sounds continually

NOTE: Check for advanced hydraulic booster DTCs before doing this troubleshooting (see page 19-47). If any DTCs are present, troubleshoot them first.

1. Turn the ignition switch to LOCK (0).
2. Disconnect the buzzer 2P connector (see page 19-109).
3. Disconnect the servo unit 25P connector (see step 13 on page 19-101).
4. Turn the ignition switch to ON (II).
5. Check for continuity between buzzer 2P connector terminal No. 1 and body ground.

BUZZER 2P CONNECTOR

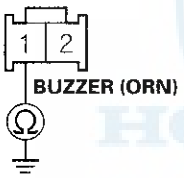

Wire side of female terminals

Is there continuity?

YES—Repair short to body ground in the wire between the buzzer and body ground. ■

NO—Go to step 6.

6. Turn the ignition switch to LOCK (0).
7. Connect the buzzer 2P connector.
8. Turn the ignition switch to ON (II).

Does the buzzer sound?

YES—Replace the buzzer (see page 19-109). ■

NO—Replace the servo unit (see page 19-100). ■

Brake System Bleeding

NOTE:
- Do not reuse the drained fluid. Use only clean Honda DOT 3 Brake Fluid from an unopened container. Using a non-Honda brake fluid can cause corrosion and shorten the life of the system.
- Make sure no dirt or other foreign matter is allowed to contaminate the brake fluid.
- Do not spill brake fluid on the vehicle, it may damage the paint; if brake fluid does contact the paint, wash it off immediately with water.
- When you turn the ignition switch to ON (II), the power unit may operate (you can hear the motor sound).

Brake Fluid Level Inspection

1. Turn the ignition switch to ON (II).
2. Press the brake pedal several times.
3. Turn the ignition switch to LOCK (0), then turn it to ON (II) again.
4. Wait several seconds for the brake fluid in the subreservoir (A) to stabilize.

   NOTE: Do not operate the brake pedal while doing this procedure.

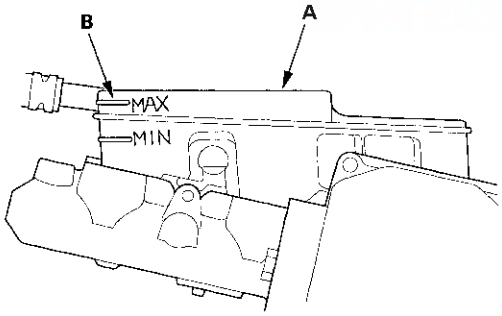

5. Check that the brake fluid level in the subreservoir is at the MAX (upper) level line (B).

Fluid Removal

NOTE: Because the conventional brake system and the AHB system use the same brake fluid reservoir, fluid removal is necessary in order to purge old fluid from the AHB system.

1. Turn the ignition switch to LOCK (0).
2. Press the brake pedal 20 times to release the pressure in the accumulator.
3. Attach a length of drain tube (A) to the bleed screw (B) on the caliper or wheel cylinder.

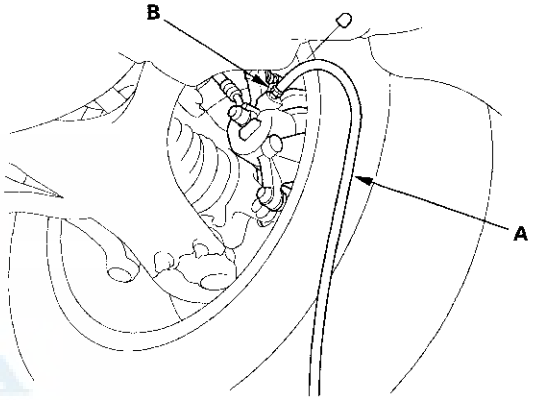

*: The illustration shows the front brake.

4. Loosen the bleed screw, and pump the brake pedal until brake fluid stops coming out.
5. Remove the air cleaner (see page 11-370).

(cont'd)

Brake System Bleeding (cont'd)

6. Remove the IMA system power cable clamp (A).

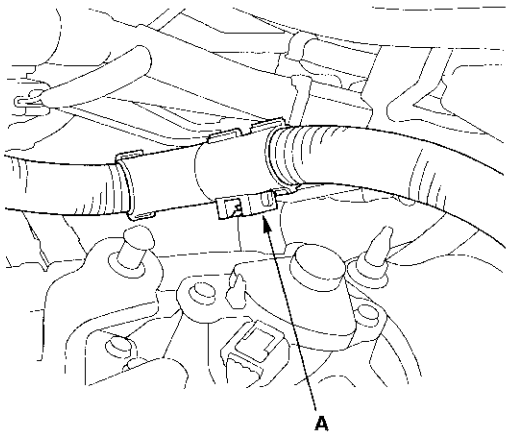

7. Disconnect the auxiliary electric water pump connector (A).

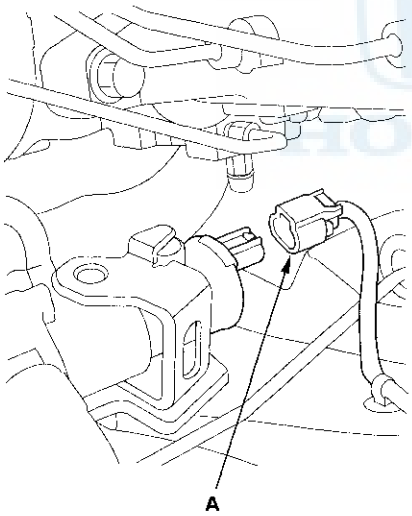

8. Attach a length of clear drain tube (A) to the bleed screw (B) under the servo unit (C), and loosen the bleed screw.

   NOTE: Turn the bleed screw about 180 °.

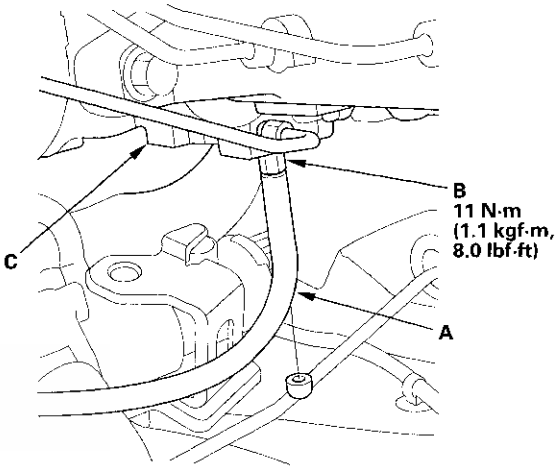

9. Turn the ignition switch to ON (II).

   NOTE: Do not operate the pump motor for more than 110 seconds or it may be damaged.

10. When the brake fluid is drained out, tighten the bleed screw, then turn the ignition switch to LOCK (0).

    NOTE: After draining the brake fluid from the servo unit and the power unit, the sound of the power unit function changes.

11. Do the brake system bleeding.

12. Install all removed parts and reconnect all connectors.

Bleeding - Normal Brake (Except Servo Unit and Power Unit)

NOTE:
- The brake fluid reservoir tank must be at least 1/2 full at the start of the bleeding procedure and checked after bleeding each brake caliper or wheel cylinder. Add fluid as required.
- Turn the ignition switch to LOCK (0) while doing this procedure.

1. Turn the ignition switch to LOCK (0).

2. Press the brake pedal several times until it becomes a hard brake pedal to release the pressure in the accumulator.

3. Make sure the brake fluid level in the reservoir tank (A) is at the middle of the tank line (B).

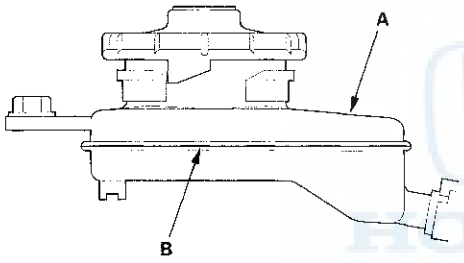

4. Have someone slowly pump the brake pedal several times, then apply steady pressure.

5. Start the bleeding at the driver's side of the front brake system.

   NOTE: Bleed the calipers or the wheel cylinders in the sequence shown.

BLEEDING SEQUENCE:

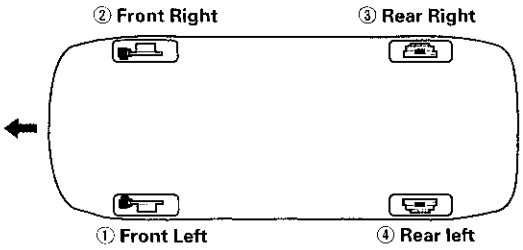

6. Attach a length of clear drain tube (A) to the bleed screw (B), then loosen the bleed screw to allow air to escape from the system. Then tighten the bleed screw securely.

Front

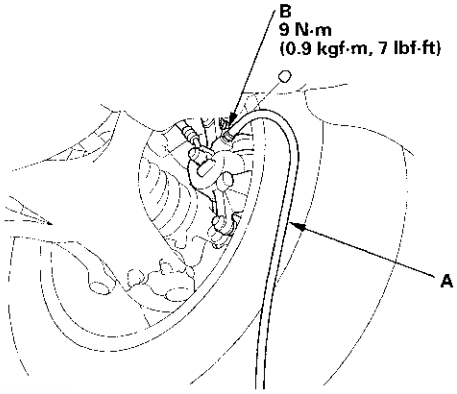

Rear-disc type

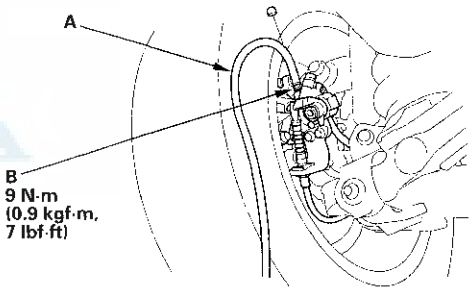

Rear-drum type

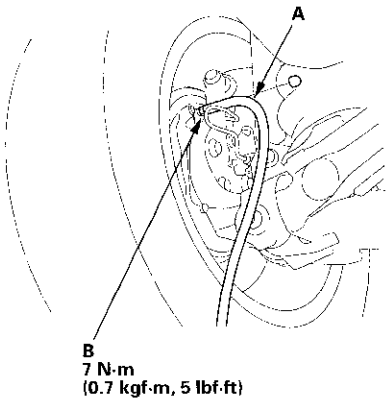

(cont'd)

Brake System Bleeding (cont'd)

7. Repeat the procedure for each brake circuit until there are no air bubbles in the fluid.

8. Refill the master cylinder reservoir tank to the middle of the tank line.

9. Inspect the brake fluid level.

10. Turn the ignition switch to ON (II), and check for the AHB indicator or brake system indicator to come on in the gauge control module (tach).

    - If the indicator(s) come on and stay on, turn the ignition switch to LOCK (0), and do the servo unit and power unit bleeding procedure.
    - If the indicators come on and then go off, the system is OK. Inspect the brake fluid level.

Bleeding - Servo Unit and Power Unit

1. Remove the air cleaner (see page 11-370).

2. Remove the IMA system power cable clamp (A).

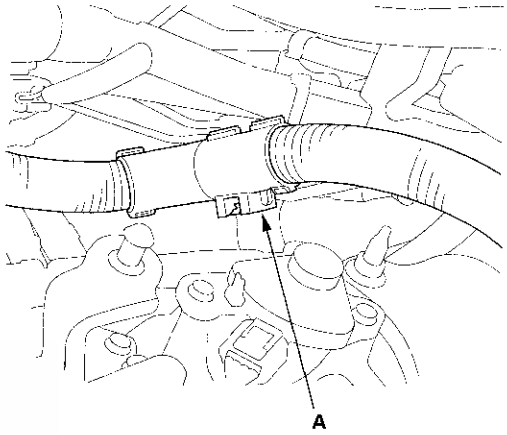

3. Disconnect the auxiliary electric water pump connector (A).

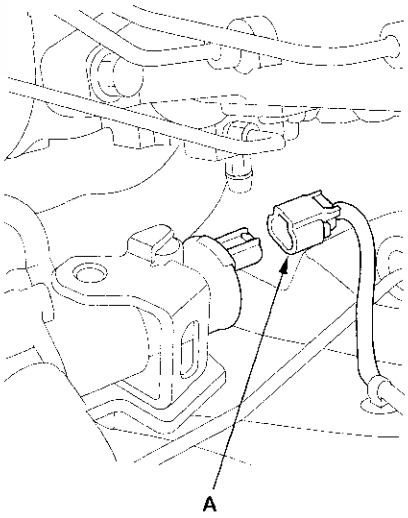

4. Add the brake fluid to the reservoir tank (A) and keep the level at the middle line (B).

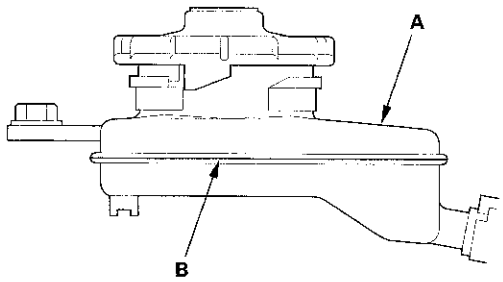

5. Attach a length of clear drain tube (A) to the bleed screw (B) under the servo unit (C), and loosen the bleed screw.

   NOTE: Turn the bleed screw about 180 °.

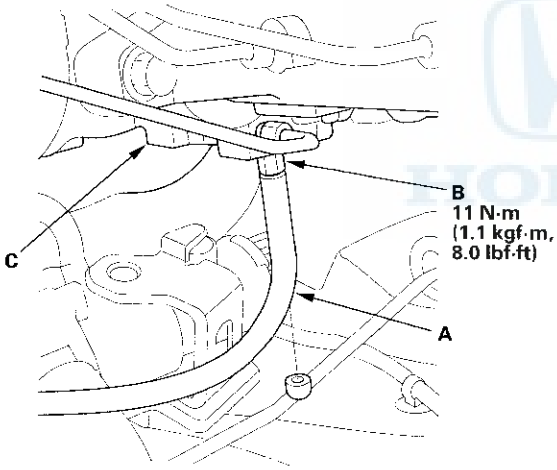

6. Turn the ignition switch to ON (II), and add the brake fluid to the reservoir tank.

   NOTE: Do not operate the pump motor for more than 110 seconds or it may be damaged.

7. Make sure the brake fluid is discharged from the bleed screw to allow air to escape from the system, then tighten the bleed screw securely.

8. Turn the ignition switch to LOCK (0).

9. Add the brake fluid in the reservoir tank, and keep it at the middle of the tank line.

10. Turn the ignition switch to ON (II).

11. Wait several seconds until the AHB indicator and/or brake system indicator goes off (see page 19-45).

12. Turn the ignition switch to LOCK (0).

13. Press the brake pedal 20 times.

14. Wait about 5 minutes.

15. Repeat step 11 to step 15 two times.

16. Make sure the bleed screw is tightened.

17. Inspect the brake fluid level.

18. Check the brake pedal stroke.

19. Install all removed parts and reconnect all connectors.

20. Clear the DTC with the HDS, if necessary (see page 19-47).

Master Cylinder and Servo Unit Replacement

NOTICE
Do not spill brake fluid on the vehicle; it may damage the paint; if brake fluid gets on the paint, wash it off immediately with water.

NOTE:
- Plug the ends of the hoses and the joints to prevent spilling brake fluid.
- The illustrations shows with ABS.

1. Remove the air cleaner (see page 11-370).

2. Remove the IMA system power cable clamps (A).

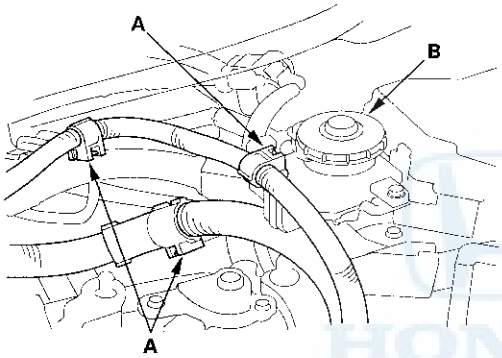

3. Remove the reservoir cap (B), and remove the brake fluid (see page 19-95).

4. Remove the reservoir tank mounting bolt (A).

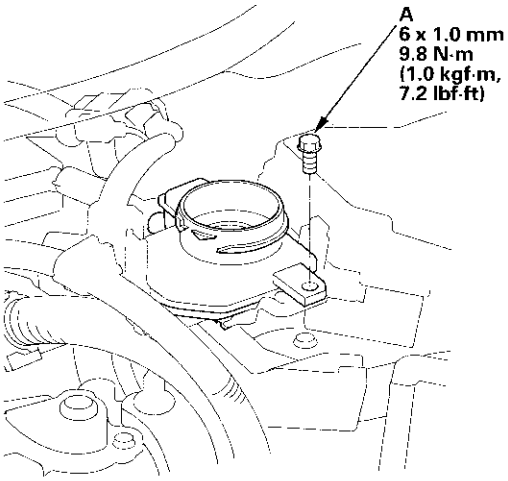

5. Remove the wire harness clamps (A).

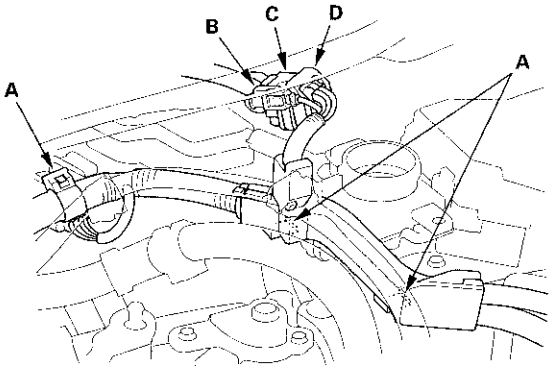

6. Disconnect the wire harness connector (B) and the locked connector (C) by pulling down the lever (D).

7. Remove the reservoir tank bracket (A).

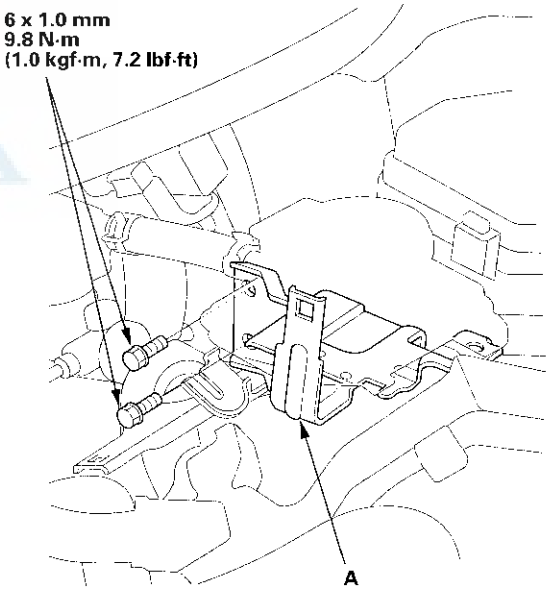

8. Remove the wire harness clamps stay (A).

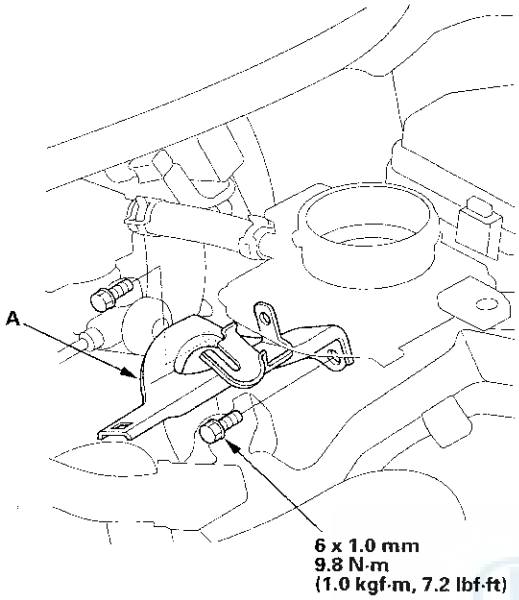

9. Disconnect the brake lines (A) from the master cylinder (B).

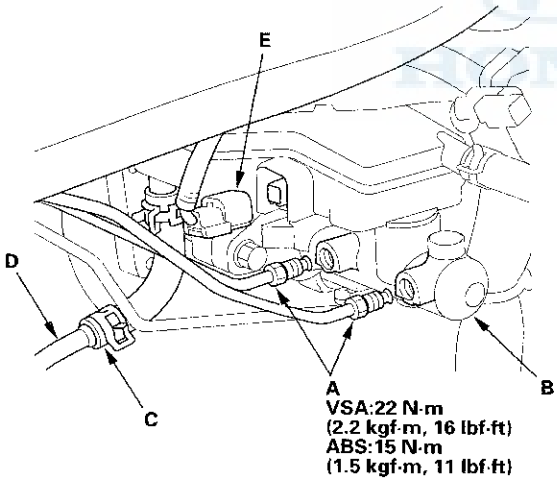

10. Disconnect the suction hose (C) from the brake line (D).

11. Disconnect the brake fluid level switch connector (E).

12. Disconnect the brake line (A) from the servo unit (B).

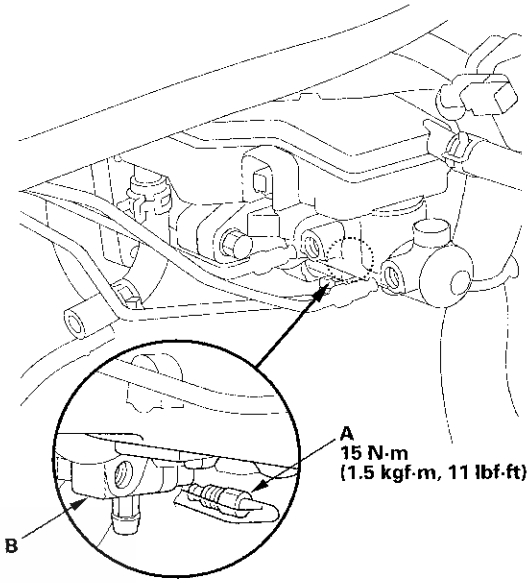

13. Disconnect the servo unit 25P connector (A) by pulling down the lock (B).

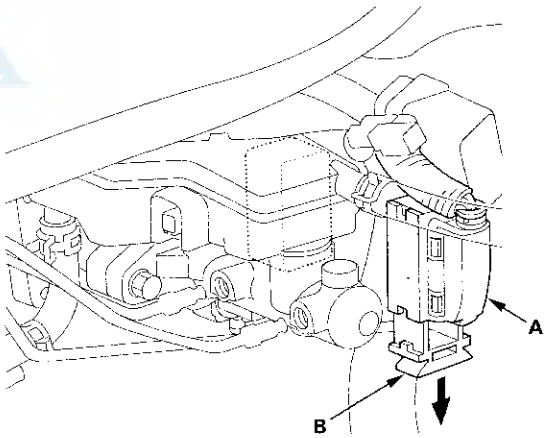

(cont'd)

Advanced Hydraulic Booster

Master Cylinder and Servo Unit Replacement (cont'd)

14. Remove the brake lines (A) from the clamp (B).

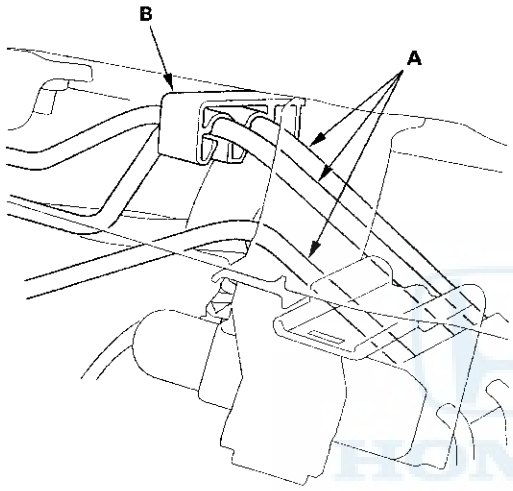

15. Disconnect the brake lines (A) from the ABS or VSA modulator-control unit (B).

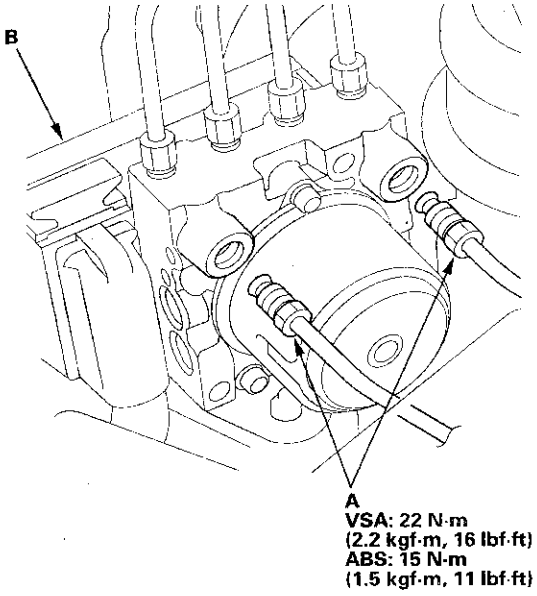

16. Remove the lock pin (A) and the clevis pin (B), then disconnect the yoke (C) from the brake pedal.

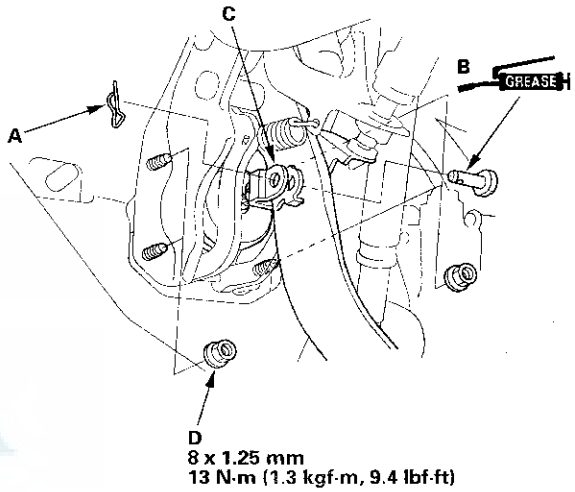

17. Remove the servo unit mounting nuts (D).

18. Remove the servo unit (A) with master cylinder from the engine compartment.

NOTE:
- Be careful not to bend or damage the brake lines.
- Use the new servo unit gasket (B) during reassembly.

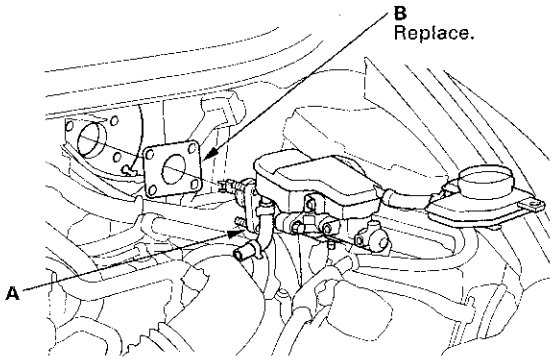

19. Remove the subreservoir (A) and the reservoir grommets (B) from the servo unit (C) with the master cylinder (D).

    NOTE: When removing the subreservoir, replace the reservoir grommets with new ones.

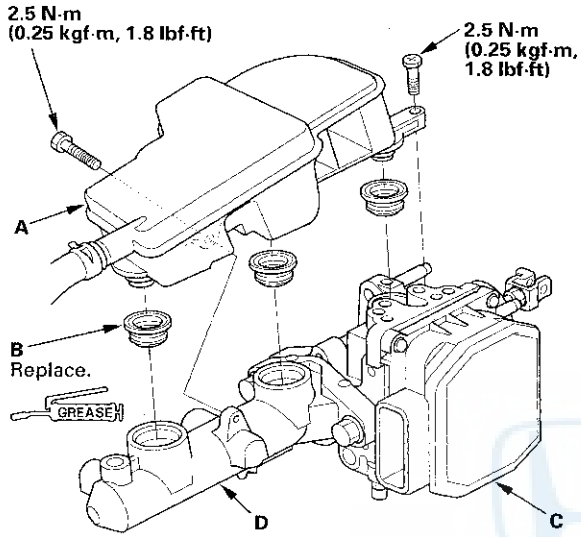

20. Remove the master cylinder mounting bolts (A), and separate the master cylinder (B) from the servo unit (C).

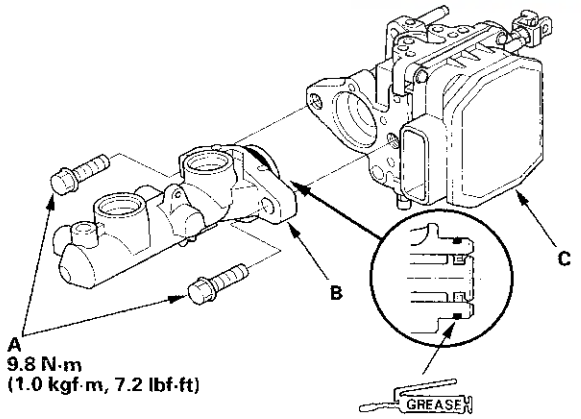

21. Install the master cylinder and the servo unit in the reverse order of removal, and note these items:

    - Coat the new O-ring with the Shin-Etsu silicone grease (P/N 08798-9013).
    - Make sure not to get any silicone grease on the terminal part of the connectors and switches, especially if you have silicone grease on your hands or gloves.
    - Check the brake pedal height and free play, and adjust it if necessary (see page 19-6).

22. Do the normal brake system bleeding (except servo unit and power unit) (see page 19-97).

23. Do the servo unit and power unit system bleeding (see page 19-98).

24. Spin the wheels to check for brake drag.

25. Do the sensor 0 (zero) position memorization (see page 19-48).

Master Cylinder Inspection

1. Inspect and note these items:

   - Before reassembling, check that all parts are free of dirt and other foreign particles.
   - Do not try to disassemble the master cylinder assembly. Replace the master cylinder assembly with a new part if necessary.
   - Do not allow dirt or foreign matter to contaminate the brake fluid.

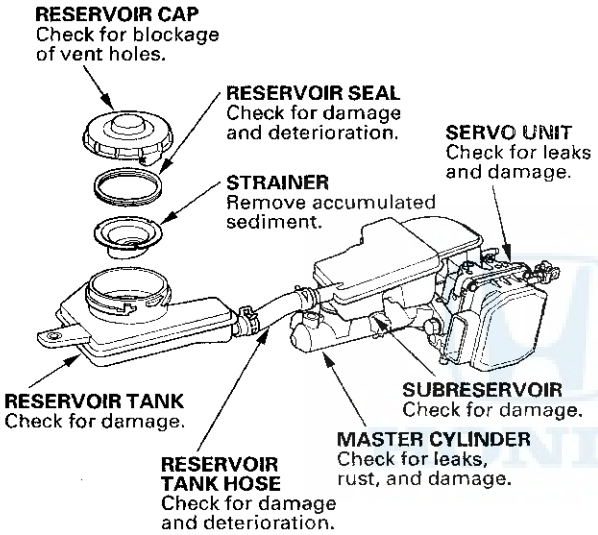

2. If the suction hose (A) from the subreservoir (B) was removed, install the hose.

   NOTE: Position the clamp (C) as shown.

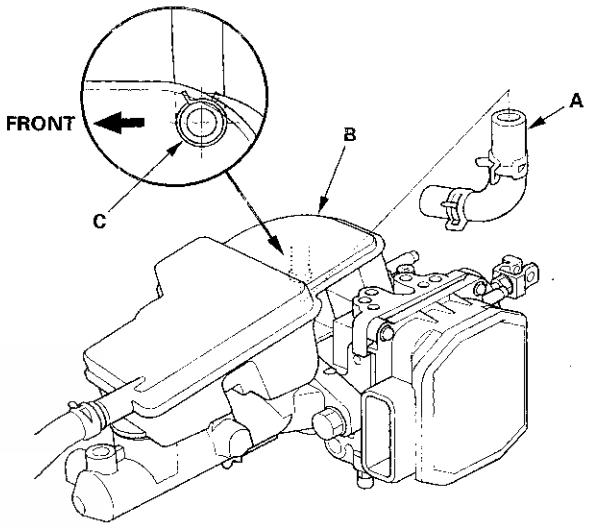

3. If the reservoir tank hose was disconnected, install the reservoir tank (A) and the reservoir tank hose (B) to the subreservoir (C).

   NOTE:
   - Align the "△" mark (D) on the reservoir tank and subreservoir with the paint mark (E) on the hose.
   - Position the clamps (F) as shown.

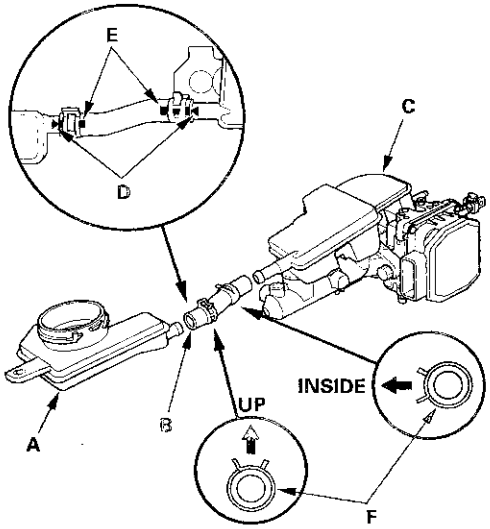

Power Unit Replacement

NOTICE
Do not spill brake fluid on the vehicle; it may damage the paint; if brake fluid gets on the paint, wash it off immediately with water.

NOTE: Plug the ends of the hoses and the joints to prevent spilling brake fluid.

1. Remove the cowl cover and the under-cowl panel (see page 20-140).
2. Remove the brake fluid (see page 19-95).
3. Remove the heat shield (A).

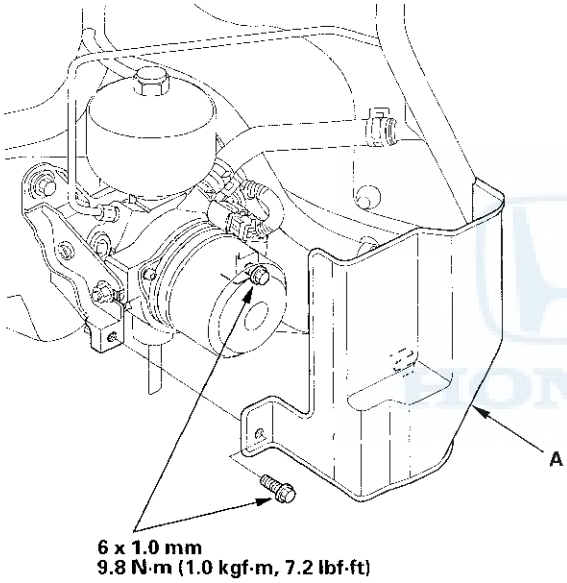

4. Disconnect the brake line (A) from the power unit (B).

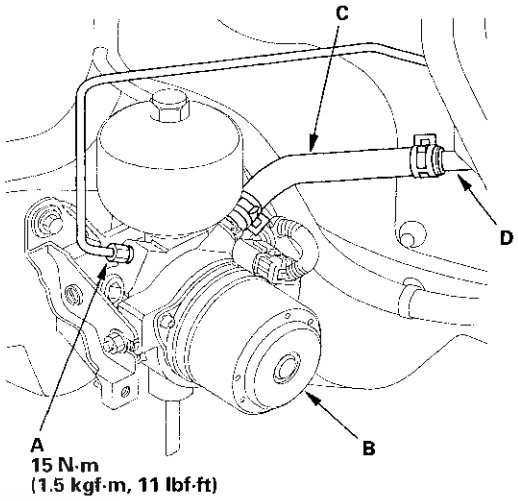

5. Disconnect the suction hose (C) from the brake line (D).
6. Disconnect the power unit 2P connector (A), and remove the clip (B).

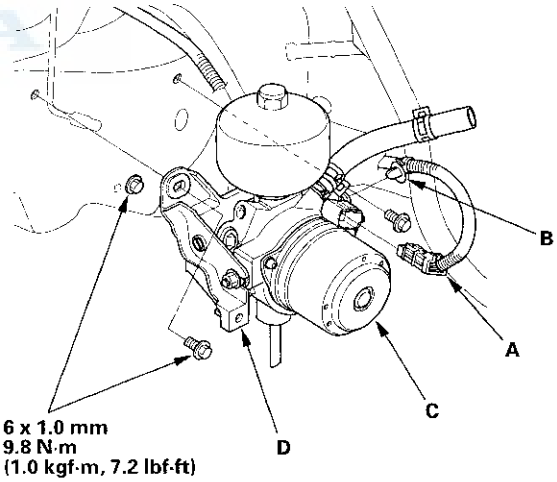

7. Remove the power unit (C) with the bracket (D) from the frame.

(cont'd)

Power Unit Replacement (cont'd)

8. Separate the power unit (A) and the bracket (B), and remove the suction hose (C).

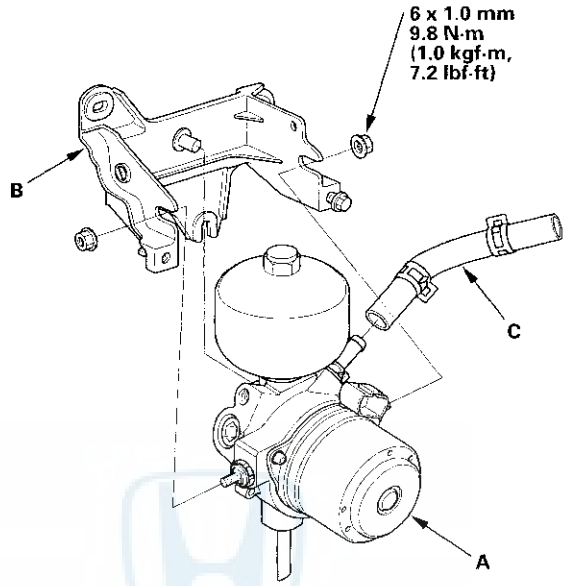

9. Install the power unit in the reverse order of removal.

10. Do the normal brake system bleeding (except the servo unit and the power unit) (see page 19-97).

11. Do the servo unit and power unit system bleeding (see page 19-98).

Power Unit Disassembly

Exploded View

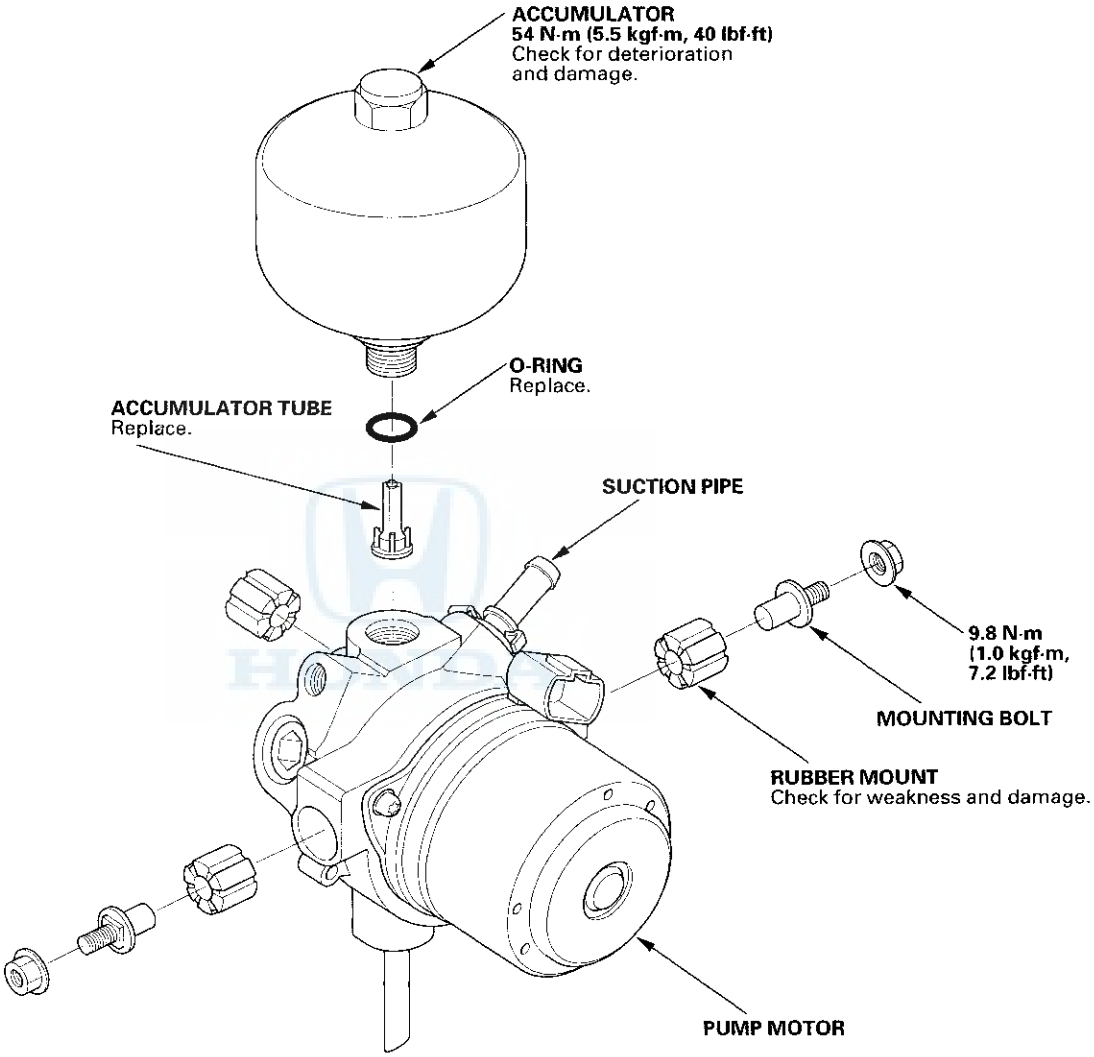

Accumulator Disposal

⚠ WARNING

The accumulator contains nitrogen gas under pressure.
The pressure must be relieved before disposal to prevent explosion and possible injury when scrapping.

⚠ WARNING

Always wear eye protection to avoid getting metal shavings in your eyes when the accumulator pressure is relieved.

Firmly clamp the accumulator in a vise, and drill a hole of 2—3 mm (0.078—0.118 in.) diameter in marked area (A) of the body to release the gas.

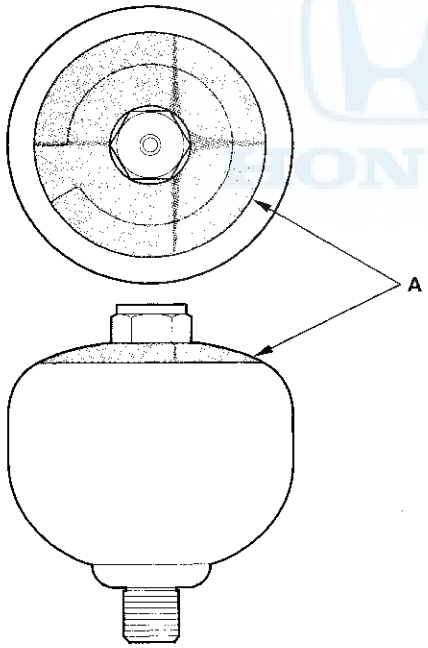

Brake Pedal Replacement

1. Disconnect the brake pedal position switch connector (A).

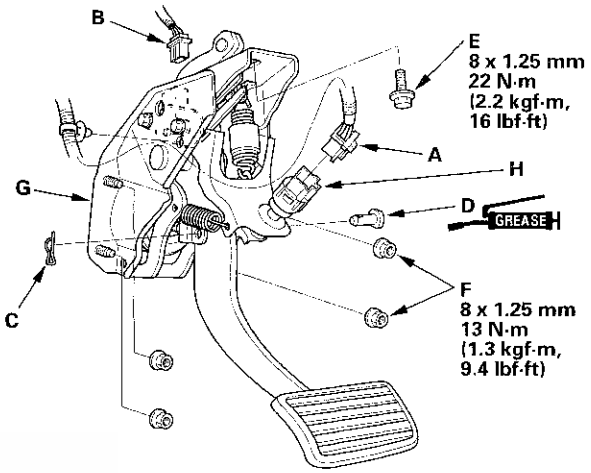

2. Disconnect the brake pedal stroke sensor connector (B).
3. Remove the lock pin (C) and clevis pin (D).
4. Remove the brake pedal bracket mounting bolt (E) and nuts (F).
5. Remove the brake pedal with bracket (G).
6. Remove the brake pedal position switch (H) by turning it counterclockwise.
7. Install the brake pedal in the reverse order of removal.

   NOTE: Make sure movement of the brake pedal and the brake pedal stroke sensor.
8. Do the brake pedal and brake pedal position switch adjustment (see page 19-6).
9. Do the sensor 0 (zero) position memorization (see page 19-48).

Brake Pedal Stroke Sensor Replacement

1. Remove the brake pedal (see page 19-108).
2. Remove the bolts (A), and remove the brake pedal stroke sensor (B).

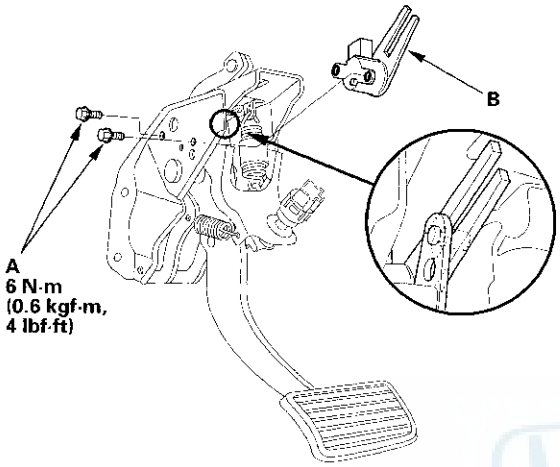

3. Install the brake pedal stroke sensor in the reverse order of removal.
4. Do the sensor 0 (zero) position memorization (see page 19-48).

Buzzer Replacement

1. Remove the subdisplay visor (see page 20-87).
2. Remove the clip (A), and disconnect the buzzer 2P connector (B).

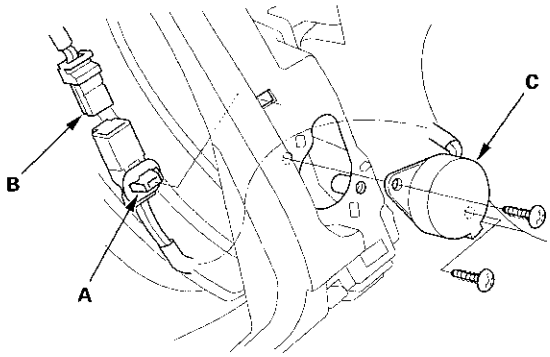

3. Remove the buzzer (C).
4. Install the buzzer in the reverse order of removal.
5. Do the BUZZER ON in the FUNCTION TEST with the HDS, and check that the buzzer can sound.

Brakes

Conventional Brake Components **19-1**

Advanced Hydraulic Booster **19-43**

ABS (Anti-lock Brake System) Components ('06-08 Models)

Component Location Index 19-112
General Troubleshooting Information 19-113
DTC Troubleshooting Index 19-116
Symptom Troubleshooting Index 19-119
System Description 19-120
Circuit Diagram 19-126
DTC Troubleshooting 19-129
Symptom Troubleshooting 19-152
ABS Modulator-Control Unit
Removal and Installation 19-154
Wheel Speed Sensor Replacement 19-156

VSA (Vehicle Stability Assist) System Components ('09 Model) **19-159**

ABS Components

Component Location Index

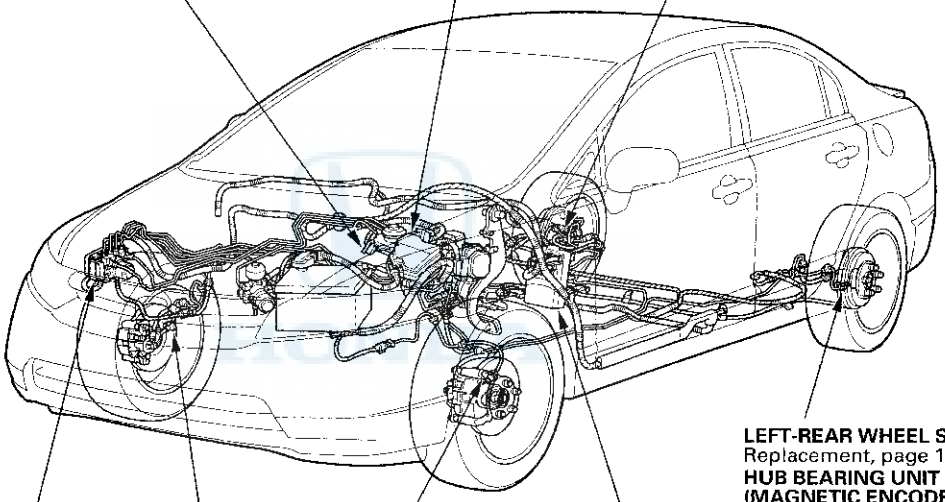

General Troubleshooting Information

System Indicator

This system has two indicators:

- ABS indicator (A)
- Brake system indicator (B)

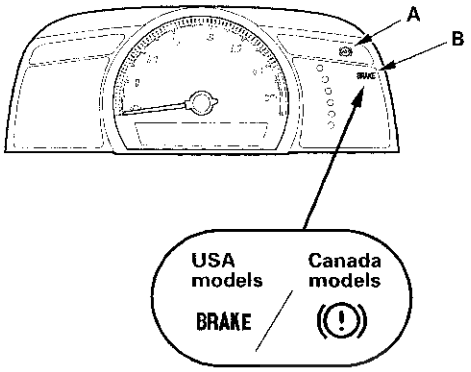

When the system is OK, each indicator comes on for about 2 seconds after turning the ignition switch to ON (II), then goes off.
When the system detects a problem, a DTC is set and, depending upon the failure, the ABS modulator-control unit determines which indicator(s) are turned on. If the problem goes away (system returns to normal), the indicator(s) are controlled in the following way depending upon the DTC that is set:

- The indicator(s) will come on and stay on when the ignition switch is ON (II).
- The indicator(s) automatically go off.
- The indicator(s) go off after the vehicle is driven.

ABS Indicator

The ABS indicator comes on when the ABS function is lost. The brakes still work like a conventional system with the advanced hydraulic booster.

Brake System Indicator

The brake system indicator comes on when the EBD function is lost, the advanced hydraulic booster function is lost, the parking brake is applied, and/or the brake fluid level is low.

NOTE: If two or more wheel speed sensors fail, the brake system indicator comes on.

(cont'd)

General Troubleshooting Information (cont'd)

Diagnostic Trouble Code (DTC)

- The memory holds all DTCs. However, when the same DTC is detected more than once, the more recent DTC is written over the earlier one. Therefore, when the same problem is detected repeatedly, it is memorized as a single DTC.
- The DTCs are indicated in the order they occur.
- The DTCs are memorized in the EEPROM. Therefore, the memorized DTCs cannot be erased by disconnecting the battery. Do the specified procedures to clear the DTCs.

Self-diagnosis

- Self-diagnosis can be classified into two categories:
  - Initial diagnosis: Done right after the ignition switch is turned to ON (II) and until the ABS indicator goes off.
  - Regular diagnosis: Done right after the initial diagnosis until the ignition switch is turned to LOCK (0).
- When the system detects a problem, the ABS modulator-control unit shifts to fail-safe mode.

Kickback

The pump motor operates when the ABS modulator-control unit is functioning, and the fluid in the reservoir is forced out to the master cylinder, causing kickback at the brake pedal.

Pump Motor

- The pump motor operates when the ABS modulator-control unit is functioning.
- The ABS modulator-control unit checks the pump motor operation one time after completing initial diagnosis, during regular diagnosis when the vehicle is driven over 10 mph (15 km/h).

Brake Fluid Replacement/Air Bleeding

Brake fluid replacement and air bleeding procedures are identical to the procedures of advanced hydraulic booster (see page 19-95).

How to Troubleshoot DTCs

The troubleshooting procedures assume that the cause of the problem is still present, and the ABS indicator is still on. Following a troubleshooting procedure for a code that has been cleared but does not reset can result in incorrect diagnosis.

1. Question the customer about the conditions when the problem occurred, and try to reproduce the same conditions for troubleshooting. Find out when the ABS indicator came on, such as during activation, after activation, when the vehicle was traveling at a certain speed, etc. If necessary, have the customer demonstrate the concern.

2. When the ABS indicator does not come on during the test-drive, but troubleshooting is done based on the DTC, check for loose connectors, poor contact of the terminals, etc. in the circuit indicated by the DTC before you start troubleshooting.

3. After troubleshooting, or the repairs are done, clear the DTCs, and test-drive the vehicle under the same conditions that originally set the DTCs. Make sure the ABS indicator does not come on.

4. Check for DTCs from other systems which are connected via F-CAN. If there are DTCs that are related to F-CAN, one possible cause was that the ignition switch was turned to ON (II) with the ABS modulator-control unit connector disconnected. Clear the DTCs. Check for fuel and emissions DTC's first.

   NOTE: Always troubleshoot fuel and emissions DTC's first.

Intermittent Failures

The term "intermittent failure" means a system may have had a failure, but it checks OK now. If you cannot reproduce the condition, check for loose connectors or terminal pins related to the circuit that you are troubleshooting.

How to Use the HDS (Honda Diagnostic System)

1. If the system indicators stay on, connect the HDS to the data link connector (DLC) (A) located under the driver's side of the dashboard.

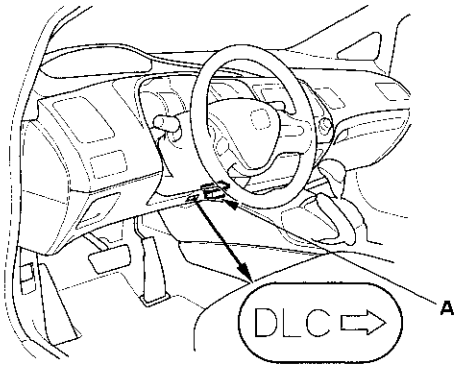

2. Turn the ignition switch to ON (II).

3. Make sure the HDS communicates with the vehicle and the ABS modulator-control unit. If it doesn't, troubleshoot the DLC circuit (see page 11-213).

4. Check the diagnostic trouble code (DTC) for all systems, troubleshoot the powertrain DTCs first and note it. Then refer to the indicated DTC's troubleshooting, and do the appropriate troubleshooting procedure.

   NOTE:
   - The HDS communication stops when the vehicle speed is at 31 mph (50 km/h) or more.
   - The HDS reads the DTC, the current data, and other system data.
   - For specific operations, refer to the Help menu that came with the HDS.

How to Retrieve DTCs

1. With the ignition switch in LOCK (0), connect the HDS to the data link connector (DLC) under the driver's side of the dashboard.

2. Turn the ignition switch to ON (II).

3. Make sure the HDS communicates with the vehicle and the ABS modulator-control unit. If it doesn't, troubleshoot the DLC circuit (see page 11-213).

4. Follow the prompts on the HDS to display the DTC(s) on the screen. After determining the DTC, refer to the DTC troubleshooting. Do all systems DTC check, and troubleshoot any powertrain DTCs first.

5. Turn the ignition switch to LOCK (0).

How to Clear DTCs

1. With the ignition switch in LOCK (0), connect the HDS to the data link connector (DLC) under the driver's side of the dashboard.

2. Turn the ignition switch to ON (II).

3. Make sure the HDS communicates with the vehicle and the ABS modulator-control unit. If it doesn't, troubleshoot the DLC circuit (see page 11-213).

4. Clear the DTC(s) by following the screen prompts on the HDS.

5. Turn the ignition switch to LOCK (0).

ABS Components

DTC Troubleshooting Index

DTC		Detection Item	ABS Indicator	Brake System Indicator	Note
11	-13	Right-front Wheel Speed Sensor Circuit Malfunction	ON	ON/OFF*	(see page 19-129)
12	-11	Right-front Wheel Speed Sensor Electrical Noise or Intermittent Interruption	ON	ON/OFF*	(see page 19-132)
	-12	Right-front Wheel Speed Sensor Short to the Other Sensor Circuit	ON	ON/OFF*	(see page 19-133)
	-21	Right-front Wheel Speed Sensor Installation Error	ON	ON/OFF*	(see page 19-135)
	-22	Right-front Wheel Speed Sensor Installation Error (19mph (30 km/h) or More)	ON	ON/OFF*	(see page 19-135)
	-23	Right-front Wheel Speed Sensor Installation Error (0 to 9 mph (0 to 15 km/h))	ON	ON/OFF*	(see page 19-136)
13	-13	Left-front Wheel Speed Sensor Circuit Malfunction	ON	ON/OFF*	(see page 19-129)
14	-11	Left-front Wheel Speed Sensor Electrical Noise or Intermittent Interruption	ON	ON/OFF*	(see page 19-132)
	-12	Left-front Wheel Speed Sensor Short to the Other Sensor Circuit	ON	ON/OFF*	(see page 19-133)
	-21	Left-front Wheel Speed Sensor Installation Error	ON	ON/OFF*	(see page 19-135)
	-22	Left-front Wheel Speed Sensor Installation Error (19 mph (30 km/h) or More)	ON	ON/OFF*	(see page 19-135)
	-23	Left-front Wheel Speed Sensor Installation Error (0 to 9 mph (0 to 15 km/h))	ON	ON/OFF*	(see page 19-136)
15	-13	Right-rear Wheel Speed Sensor Circuit Malfunction	ON	ON/OFF*	(see page 19-129)
16	-11	Right-rear Wheel Speed Sensor Electrical Noise or Intermittent Interruption	ON	ON/OFF*	(see page 19-132)
	-12	Right-rear Wheel Speed Sensor Short to the Other Sensor Circuit	ON	ON/OFF*	(see page 19-133)
	-21	Right-rear Wheel Speed Sensor Installation Error	ON	ON/OFF*	(see page 19-135)
	-22	Right-rear Wheel Speed Sensor Installation Error (19 mph (30 km/h) or More)	ON	ON/OFF*	(see page 19-135)
	-23	Right-rear Wheel Speed Sensor Installation Error (0 to 9 mph (0 to 15 km/h))	ON	ON/OFF*	(see page 19-136)
17	-13	Left-rear Wheel Speed Sensor Circuit Malfunction	ON	ON/OFF*	(see page 19-129)
18	-11	Left-rear Wheel Speed Sensor Electrical Noise or Intermittent Interruption	ON	ON/OFF*	(see page 19-132)
	-12	Left-rear Wheel Speed Sensor Short to the Other Sensor Circuit	ON	ON/OFF*	(see page 19-133)
	-21	Left-rear Wheel Speed Sensor Installation Error	ON	ON/OFF*	(see page 19-135)
	-22	Left-rear Wheel Speed Sensor Installation Error (19 mph (30 km/h) or More)	ON	ON/OFF*	(see page 19-135)
	-23	Left-rear Wheel Speed Sensor Installation Error (0 to 9 mph (0 to 15 km/h))	ON	ON/OFF*	(see page 19-136)
21	-11	Right-front Magnetic Encoder (Wheel Bearing) Malfunction (Pulse Missing)	ON	ON/OFF*	(see page 19-136)
22	-11	Left-front Magnetic Encoder (Wheel Bearing) Malfunction (Pulse Missing)	ON	ON/OFF*	(see page 19-136)
23	-11	Right-rear Magnetic Encoder (Wheel Bearing) Malfunction (Pulse Missing)	ON	ON/OFF*	(see page 19-136)
24	-11	Left-rear Magnetic Encoder (Wheel Bearing) Malfunction (Pulse Missing)	ON	ON/OFF*	(see page 19-136)
31	-01	ABS Right-front Inlet Solenoid Valve Malfunction (Solenoid Initial Pulse)	ON	ON	(see page 19-137)
	-21	ABS Right-front Inlet Solenoid Valve Malfunction (Solenoid Pulse)	ON	ON	(see page 19-137)
	-22	ABS Right-front Inlet Solenoid Valve Malfunction (Solenoid Speculative)	ON	ON	(see page 19-137)
	-23	ABS Right-front Inlet Solenoid Valve Malfunction (Solenoid Stuck ON)	ON	ON	(see page 19-137)
32	-01	ABS Right-front Outlet Solenoid Valve Malfunction (Solenoid Initial Pulse)	ON	ON	(see page 19-137)
	-21	ABS Right-front Outlet Solenoid Valve Malfunction (Solenoid Pulse)	ON	ON	(see page 19-137)
	-22	ABS Right-front Outlet Solenoid Valve Malfunction (Solenoid Speculative)	ON	ON	(see page 19-137)
	-23	ABS Right-front Outlet Solenoid Valve Malfunction (Solenoid Stuck ON)	ON	ON	(see page 19-137)

*: Brake system indicator turns ON when two or more wheels fail.

DTC		Detection Item	ABS Indicator	Brake System Indicator	Note
33	-01	ABS Left-front Inlet Solenoid Valve Malfunction (Solenoid Initial Pulse)	ON	ON	(see page 19-137)
	-21	ABS Left-front Inlet Solenoid Valve Malfunction (Solenoid Pulse)	ON	ON	(see page 19-137)
	-22	ABS Left-front Inlet Solenoid Valve Malfunction (Solenoid Speculative)	ON	ON	(see page 19-137)
	-23	ABS Left-front Inlet Solenoid Valve Malfunction (Solenoid Stuck ON)	ON	ON	(see page 19-137)
34	-01	ABS Left-front Outlet Solenoid Valve Malfunction (Solenoid Initial Pulse)	ON	ON	(see page 19-137)
	-21	ABS Left-front Outlet Solenoid Valve Malfunction (Solenoid Pulse)	ON	ON	(see page 19-137)
	-22	ABS Left-front Outlet Solenoid Valve Malfunction (Solenoid Speculative)	ON	ON	(see page 19-137)
	-23	ABS Left-front Outlet Solenoid Valve Malfunction (Solenoid Stuck ON)	ON	ON	(see page 19-137)
35	-01	ABS Right-rear Inlet Solenoid Valve Malfunction (Solenoid Initial Pulse)	ON	ON	(see page 19-137)
	-21	ABS Right-rear Inlet Solenoid Valve Malfunction (Solenoid Pulse)	ON	ON	(see page 19-137)
	-22	ABS Right-rear Inlet Solenoid Valve Malfunction (Solenoid Speculative)	ON	ON	(see page 19-137)
	-23	ABS Right-rear Inlet Solenoid Valve Malfunction (Solenoid Stuck ON)	ON	ON	(see page 19-137)
36	-01	ABS Right-rear Outlet Solenoid Valve Malfunction (Solenoid Initial Pulse)	ON	ON	(see page 19-137)
	-21	ABS Right-rear Outlet Solenoid Valve Malfunction (Solenoid Pulse)	ON	ON	(see page 19-137)
	-22	ABS Right-rear Outlet Solenoid Valve Malfunction (Solenoid Speculative)	ON	ON	(see page 19-137)
	-23	ABS Right-rear Outlet Solenoid Valve Malfunction (Solenoid Stuck ON)	ON	ON	(see page 19-137)
37	-01	ABS Left-rear Inlet Solenoid Valve Malfunction (Solenoid Initial Pulse)	ON	ON	(see page 19-137)
	-21	ABS Left-rear Inlet Solenoid Valve Malfunction (Solenoid Pulse)	ON	ON	(see page 19-137)
	-22	ABS Left-rear Inlet Solenoid Valve Malfunction (Solenoid Speculative)	ON	ON	(see page 19-137)
	-23	ABS Left-rear Inlet Solenoid Valve Malfunction (Solenoid Stuck ON)	ON	ON	(see page 19-137)
38	-01	ABS Left-rear Outlet Solenoid Valve Malfunction (Solenoid Initial Pulse)	ON	ON	(see page 19-137)
	-21	ABS Left-rear Outlet Solenoid Valve Malfunction (Solenoid Pulse)	ON	ON	(see page 19-137)
	-22	ABS Left-rear Outlet Solenoid Valve Malfunction (Solenoid Speculative)	ON	ON	(see page 19-137)
	-23	ABS Left-rear Outlet Solenoid Valve Malfunction (Solenoid Stuck ON)	ON	ON	(see page 19-137)
41	-21	Right-front Wheel Lock	ON	ON/OFF*	(see page 19-138)
42	-21	Left-front Wheel Lock	ON	ON/OFF*	(see page 19-138)
43	-21	Right-rear Wheel Lock	ON	ON/OFF*	(see page 19-138)
44	-21	Left-rear Wheel Lock	ON	ON/OFF*	(see page 19-138)
51	-11	Motor Lock	ON	OFF	(see page 19-139)
	-12	Motor Drive Circuit Malfunction	ON	OFF	(see page 19-140)
	-13	Motor Drive Circuit Malfunction	ON	OFF	(see page 19-139)
52	-12	Motor Stuck OFF	ON	OFF	(see page 19-142)
53	-01	Motor Relay Stuck ON 1	ON	OFF	(see page 19-142)
	-12	Motor Relay Stuck ON 2	ON	OFF	(see page 19-142)
54	-03	Fail-safe Relay 1 Stuck ON	ON	ON	(see page 19-143)
	-04	Fail-safe Relay 1 Stuck OFF (Initial)	ON	ON	(see page 19-144)
	-21	Fail-safe Relay 1 Stuck OFF (Main)	ON	ON	(see page 19-144)

* : Brake system indicator turns ON when two or more wheels fail.

(cont'd)

DTC Troubleshooting Index (cont'd)

DTC		Detection Item	ABS Indicator	Brake System Indicator	Note
61	-01	ABS Modulator-control Unit initial IG Low Voltage	ON	ON	(see page 19-145)
	-21	ABS Modulator-control Unit Power Source Low Voltage 1	ON	ON	(see page 19-145)
	-22	ABS Modulator-control Unit Power Source Low Voltage 2	ON	OFF	(see page 19-145)
	-23	ABS Modulator-control Unit Power Source Low Voltage 3	ON	ON	(see page 19-145)
62	-21	ABS Modulator-control Unit IG High Voltage	ON	ON	(see page 19-146)
71	-21	Right-front or Left-rear Different Diameter Tire Malfunction	ON	ON	(see page 19-147)
	-22	Left-front or Right-rear Different Diameter Tire Malfunction	ON	ON	(see page 19-147)
	-23	Right-front and Right-rear Different Diameter Tire Malfunction	ON	ON	(see page 19-147)
	-24	Left-front and Left-rear Different Diameter Tire Malfunction	ON	ON	(see page 19-147)
	-25	Right-front and Left-front Different Diameter Tire Malfunction	ON	ON	(see page 19-147)
	-26	Right-rear and Left-rear Different Diameter Tire Malfunction	ON	ON	(see page 19-147)
81	-01	Central Processing Unit (CPU) Internal Circuit Malfunction	ON	ON	(see page 19-148)
	-05	Central Processing Unit (CPU) Internal Circuit Malfunction	ON	ON	(see page 19-148)
	-06	Central Processing Unit (CPU) Internal Circuit Malfunction	ON	ON	(see page 19-148)
	-08	Central Processing Unit (CPU) Internal Circuit Malfunction	ON	ON	(see page 19-148)
	-11	Central Processing Unit (CPU) Internal Circuit Malfunction	ON	ON	(see page 19-148)
	-14	Central Processing Unit (CPU) Internal Circuit Malfunction	ON	ON	(see page 19-148)
	-23	Central Processing Unit (CPU) Internal Circuit Malfunction	ON	ON	(see page 19-148)
	-30	Central Processing Unit (CPU) Internal Circuit Malfunction	ON	ON	(see page 19-148)
	-31	Central Processing Unit (CPU) Internal Circuit Malfunction	ON	ON	(see page 19-148)
	-32	Central Processing Unit (CPU) Internal Circuit Malfunction	ON	ON	(see page 19-148)
	-51	Central Processing Unit (CPU) Internal Circuit Malfunction	ON	ON	(see page 19-148)
	-52	Central Processing Unit (CPU) Internal Circuit Malfunction	ON	ON	(see page 19-148)
	-71	Central Processing Unit (CPU) Internal Circuit Malfunction	ON	OFF	(see page 19-148)
86	-01	F-CAN Bus-off Malfunction	OFF	OFF	(see page 19-149)
	-24	F-CAN Communication with Engine Malfunction	OFF	OFF	(see page 19-150)
	-25	F-CAN Communication with Engine Malfunction	OFF	OFF	(see page 19-150)
	-FF	F-CAN Communication with ABS Malfunction	OFF	OFF	(see page 19-151)

HONDA

Symptom Troubleshooting Index

When the vehicle has one of these symptoms, check for a diagnostic trouble code (DTC) with the HDS. If there is no DTC, do the diagnostic procedure for the symptom, in the sequence listed, until you find the cause.

Symptom	Diagnostic procedure
HDS does not communicate with the ABS modulator-control unit or the vehicle	Troubleshoot the DLC circuit (see page 11-213).
ABS indicator and brake system indicator do not come on	1. Do the gauge control module troubleshooting (see page 22-223). 2. Substitute a known-good ABS modulator-control unit, then recheck. If it is OK, replace the original ABS modulator-control unit (see page 19-154).
ABS indicator and brake system indicator do not go off	1. Check for F-CAN DTCs, and troubleshoot and repair those first. 2. Do the gauge control module troubleshooting (see page 22-223). 3. Symptom troubleshooting (see page 19-152).

HONDA

ABS Components

System Description

ABS Modulator-control Unit Inputs and Outputs for 25P Connector (Connector Disconnected)

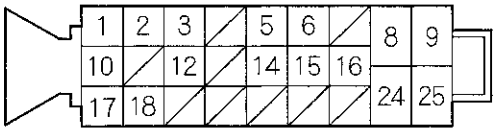

Wire side of female terminals

Terminal number	Wire color	Terminal sign	Description	Signal
1	WHT	CAN-H	F-CAN communication circuit	———
2	GRN	FR +B	Detects right-front wheel speed sensor signal	
3	RED	FL-GND	Detects left-front wheel speed sensor signal	
5	PUR	RL-GND	Detects left-rear wheel speed sensor signal	
6	LT GRN	RR +B	Detects right-rear wheel speed sensor signal	
8	WHT	FSR +B	Power source for the fail-safe relay	Battery voltage (about 12 V) at all times
9	RED	MR +B	Power source for the motor relay	Battery voltage (about 12 V) at all times

* 1: '06 model
* 2: '07-09 models

Terminal number	Wire color	Terminal sign	Description	Signal
10	LT BLU	K-LINE	Communication with HDS	——
12	WHT	FL +B	Detects left-front wheel speed sensor signal	
14	YEL	RL +B	Detects left-rear wheel speed sensor signal	
15	BLU	RR-GND	Detects right-rear wheel speed sensor signal	
16	YEL *1 GRY *2	IG1	Power source for activating the system	With ignition switch ON (II): battery voltage (about 12 V)
17	RED	CAN-L	F-CAN communication circuit	——
18	PNK	FR-GND	Detects right-front wheel speed sensor signal	
24	BLK	GND	Ground for the ABS modulator-control unit	Continuity to ground
25	BLK	MR-GND	Ground for the pump motor	Continuity to ground

* 1: '06 model
* 2: '07-09 models

(cont'd)

System Description (cont'd)

System Outline

This system is composed of the ABS modulator-control unit, the servo unit, the wheel speed sensors, and the system indicators in the gauge control module (tach). The ABS modulator-control unit controls the anti-lock brake and the brakes distribution functions.

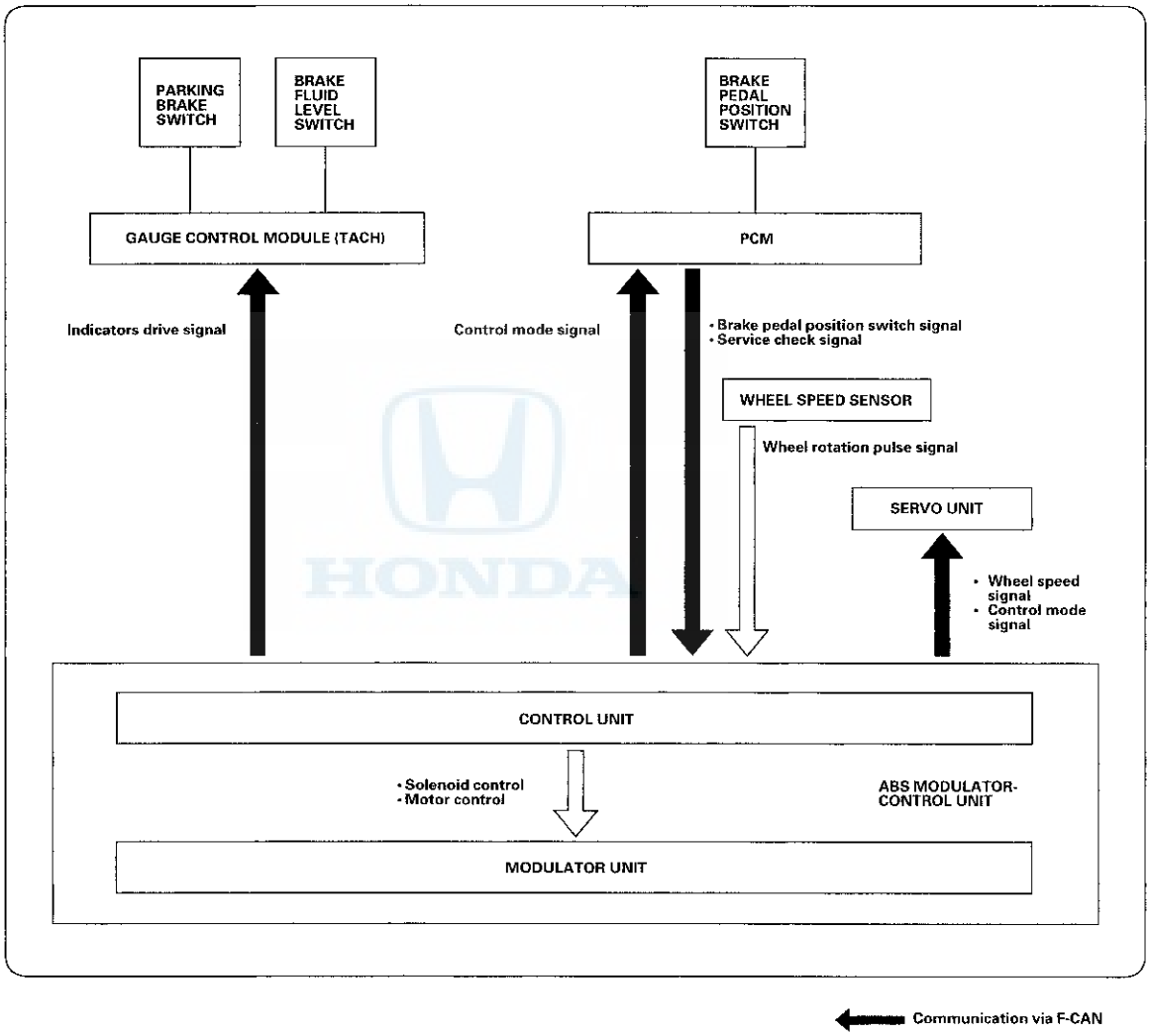

Communication via F-CAN

ABS Features

Without ABS, when the brake pedal is pressed while driving, the wheels sometimes lock before the vehicle comes to a stop. In such an event, the maneuverability of the vehicle is reduced if the front wheels are locked, and the stability of the vehicle is reduced if the rear wheels are locked, creating an extremely unstable condition. With ABS, the system precisely controls the slip rate of the wheels to ensure maximum grip force from the tires, and it thereby ensures maneuverability and stability of the vehicle. The ABS calculates the slip rate of the wheels based on the four wheel speeds, and then it controls the brake fluid pressure to reach the target slip rate.

Grip force of tire and road surface

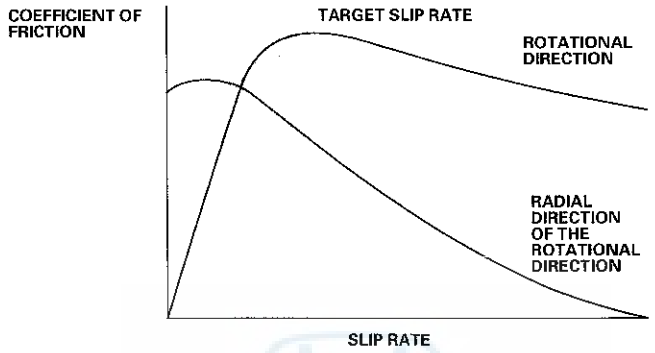

Main Control

The control unit detects the wheel speed based on the wheel speed sensor signals it receives, then it calculates the vehicle speed based on the detected wheel speed. The control unit detects the vehicle speed during deceleration based on the wheel speeds.

The control unit calculates the slip rate of each wheel, and transmits the control signal to the modulator unit solenoid valve when the slip rate is high.

The hydraulic control has three modes: Pressure intensifying, pressure reducing, and pressure retaining.

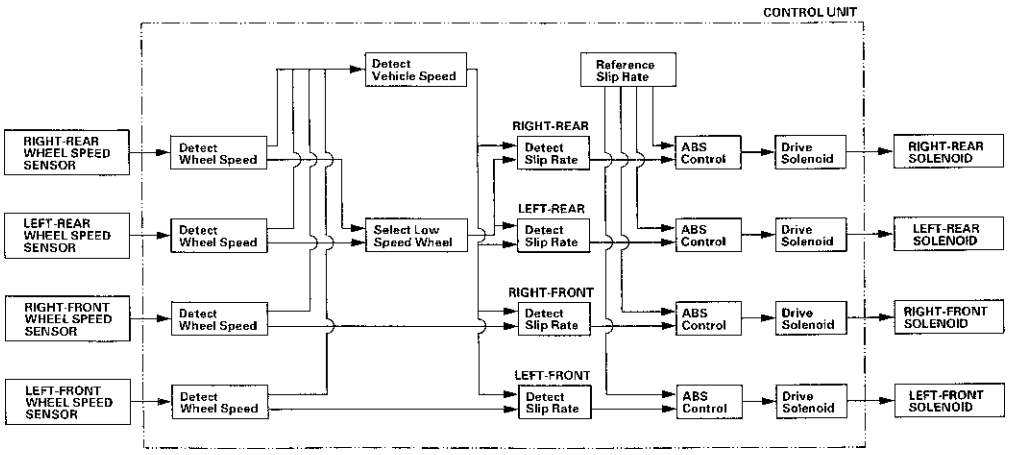

(cont'd)

System Description (cont'd)

EBD Features

The electronic brake distribution (EBD) feature helps control vehicle braking by adjusting the rear brake force in accordance with the rear wheel load before the ABS operates. Based on the wheel speed sensor signals, the control unit uses the modulator to control the rear brakes individually. When the rear wheel speed is less than the front wheel speed, the ABS modulator-control unit retains the current rear brake fluid pressure by closing the inlet valve in the modulator. As the rear wheel speed increases, and approaches the front wheel speed, the ABS modulator-control unit increases the rear brake fluid pressure by momentarily opening the inlet valve. This whole process is repeated very rapidly. While this is happening, kickback may be felt at the brake pedal.

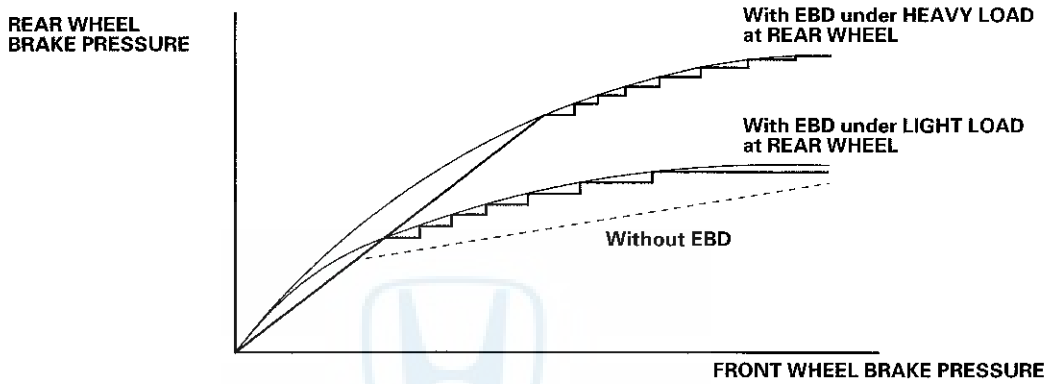

Modulator Unit

The ABS modulator consists of the inlet solenoid valve, the outlet solenoid valve, the reservoir, the pump, the pump motor, and the damping chamber. The modulator reduces the caliper fluid pressure directly. It is a circulating-type modulator because the brake fluid circulates through the caliper, the reservoir, and the master cylinder. The hydraulic control has three modes; pressure intensifying, pressure retaining, and pressure reducing. The hydraulic circuit is an independent four channel type; one channel for each wheel.

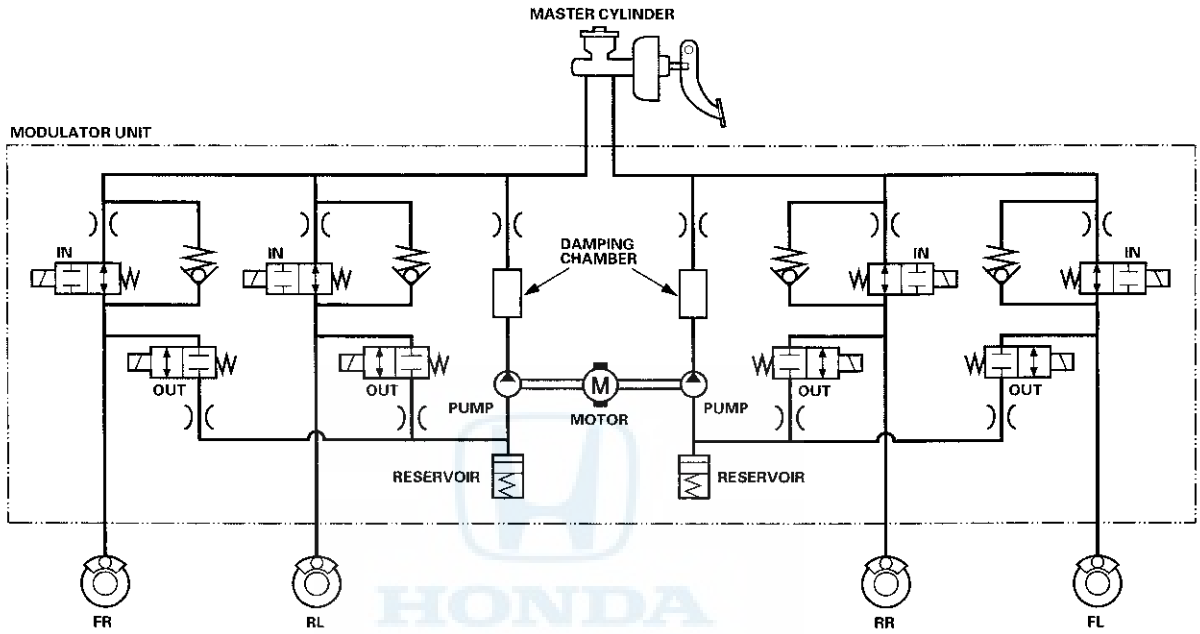

IN: INLET SOLENOID VALVE (NORMALLY OPEN)
OUT: OUTLET SOLENOID VALVE (NORMALLY CLOSED)

Mode	Inlet Solenoid Valve	Outlet Solenoid Valve	Brake Fluid
Pressure intensifying mode	open	closed	Master cylinder fluid is pumped out to the caliper.
Pressure retaining mode	closed	closed	Caliper fluid is retained by the inlet and outlet valves.
Pressure reducing mode	closed	open	• Caliper fluid flows through the outlet valve to the reservoir. • The motor pumps the reservoir fluid through the damping chamber to the master cylinder*.

*: The motor will keep running until the operation of the one anti-lock brake control is finished with the first pressure reducing mode.

ABS Components

Circuit Diagram

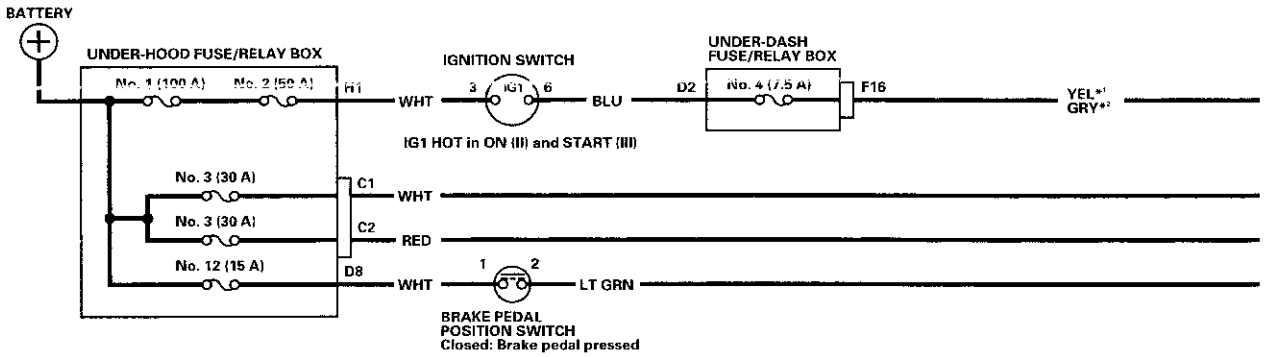

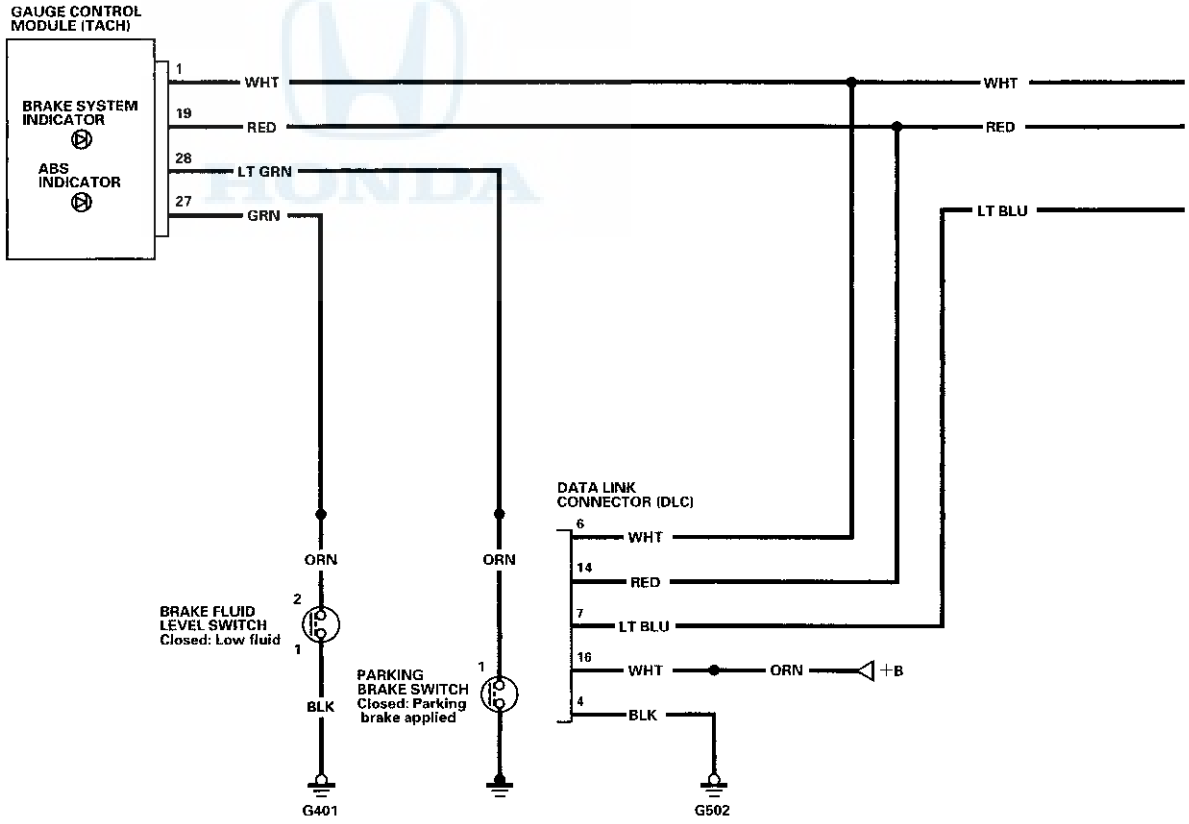

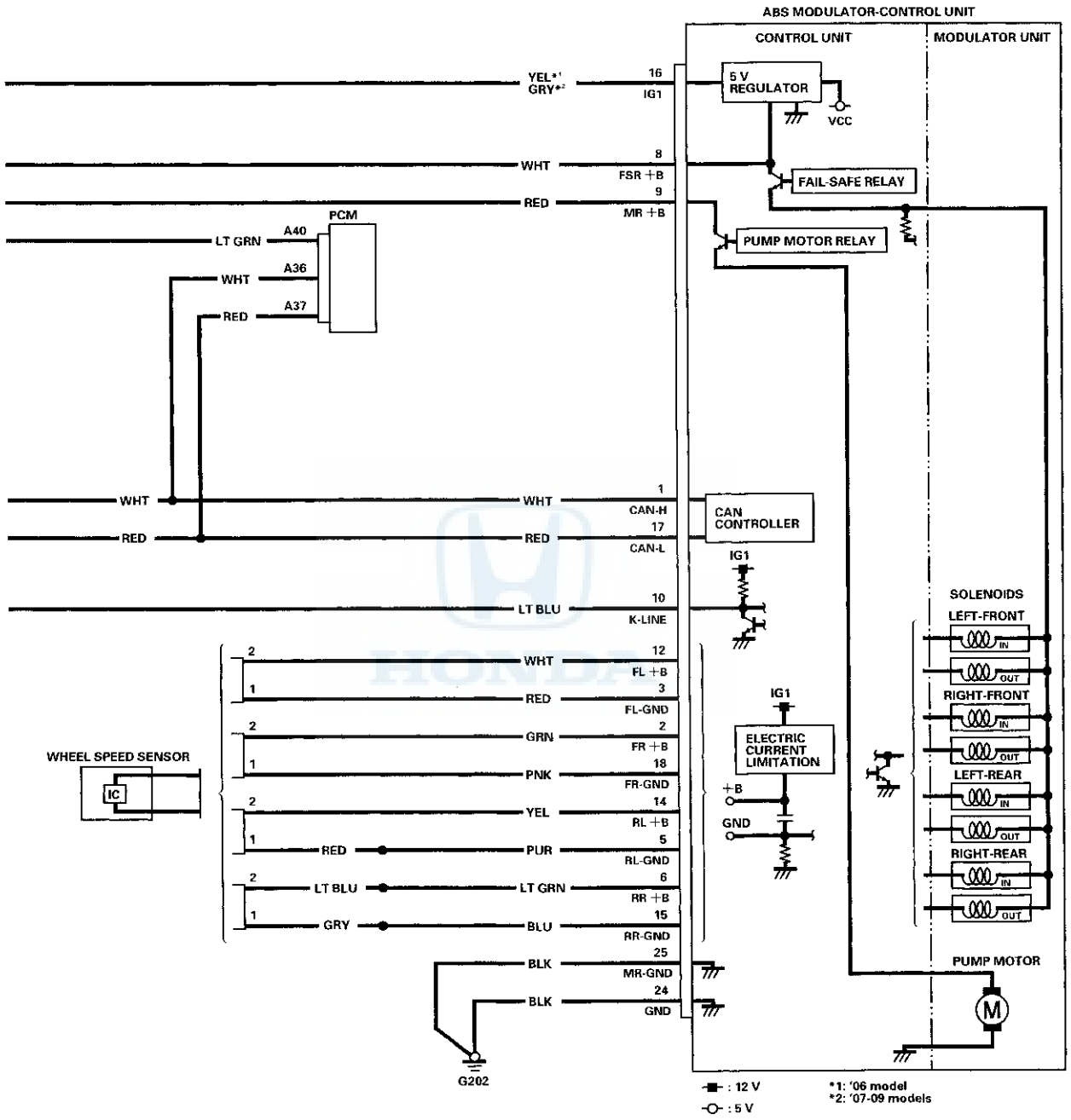
ABS MODULATOR-CONTROL UNIT
CONTROL UNIT
MODULATOR UNIT
YEL*1
GRY*2
16
IG1
5 V REGULATOR
VCC
WHT
8
FSR +B
FAIL-SAFE RELAY
RED
9
MR +B
PCM
LT GRN
A40
WHT
A36
RED
A37
PUMP MOTOR RELAY
WHT
WHT
1
CAN-H
CAN CONTROLLER
RED
RED
17
CAN-L
IG1
LT BLU
10
K-LINE
SOLENOIDS
LEFT-FRONT
IN
OUT
RIGHT-FRONT
IN
OUT
LEFT-REAR
IN
OUT
RIGHT-REAR
IN
OUT
WHT
12
FL +B
RED
3
FL-GND
GRN
2
FR +B
PNK
18
FR-GND
YEL
14
RL +B
RED
PUR
5
RL-GND
LT BLU
LT GRN
6
RR +B
GRY
BLU
15
RR-GND
WHEEL SPEED SENSOR
IC
IG1
ELECTRIC CURRENT LIMITATION
+B
GND
BLK
25
MR-GND
BLK
24
GND
PUMP MOTOR
M
G202
: 12 V
: 5 V
*1: '06 model
*2: '07-09 models

(cont'd)

Circuit Diagram (cont'd)

UNDER-HOOD FUSE/RELAY BOX CONNECTOR C (2P)

BRAKE PEDAL POSITION SWITCH 4P CONNECTOR

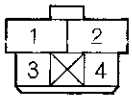

BRAKE FLUID LEVEL SWITCH 2P CONNECTOR

UNDER-DASH FUSE/RELAY BOX CONNECTOR F (34P)

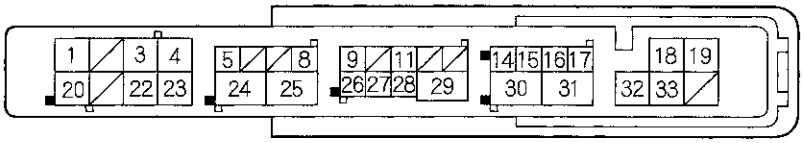

PARKING BRAKE SWITCH 1P CONNECTOR

GAUGE CONTROL MODULE (TACH) 36P CONNECTOR

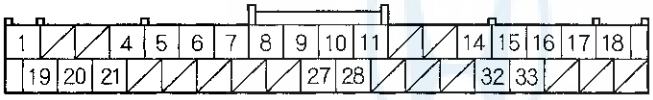

ABS MODULATOR-CONTROL UNIT 25P CONNECTOR

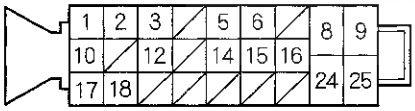

WHEEL SPEED SENSOR 2P CONNECTOR

Wire side of female terminals

PCM CONNECTOR A (44P)

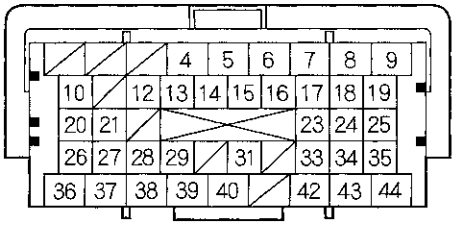

DATA LINK CONNECTOR (DLC)

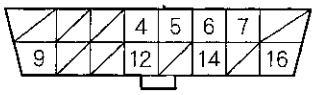

Terminal side of female terminals

DTC Troubleshooting

DTC 11-13: Right-front Wheel Speed Sensor Circuit Malfunction

DTC 13-13: Left-front Wheel Speed Sensor Circuit Malfunction

DTC 15-13: Right-rear Wheel Speed Sensor Circuit Malfunction

DTC 17-13: Left-rear Wheel Speed Sensor Circuit Malfunction

1. Turn the ignition switch to ON (II).
2. Clear the DTC with the HDS.
3. Turn the ignition switch to LOCK (0), then turn it to ON (II) again.
4. Check for DTCs with the HDS.

   Is DTC 11-13, 13-13, 15-13, and/or 17-13 indicated?

   YES—Go to step 5.

   NO—Intermittent failure, the system is OK at this time. Check for loose terminals between the wheel speed sensor 2P connector and the ABS modulator-control unit 25P connector. Refer to intermittent failures troubleshooting (see page 19-114).■

5. Turn the ignition switch to LOCK (0).
6. Disconnect the ABS modulator-control unit 25P connector (see step 2 on page 19-154).
7. Disconnect the appropriate wheel speed sensor 2P connector.
8. Check for continuity between the appropriate ABS modulator-control unit 25P connector wheel speed sensor +B and GND terminals (see table).

DTC	ABS Modulator-control Unit 25P Connector Terminal	
11-13	No. 2	No. 18
13-13	No. 12	No. 3
15-13	No. 6	No. 15
17-13	No. 14	No. 5

ABS MODULATOR-CONTROL UNIT 25P CONNECTOR

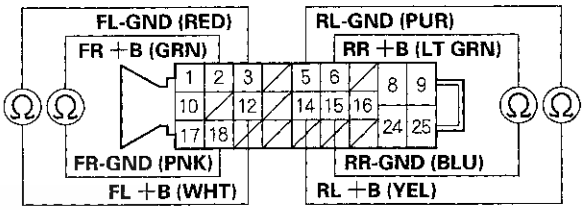

Wire side of female terminals

Is there continuity?

YES—Repair short in the wires between the appropriate wheel speed sensor and the ABS modulator-control unit.■

NO—Go to step 9.

(cont'd)

DTC Troubleshooting (cont'd)

9. Check for continuity between the appropriate ABS modulator-control unit 25P connector terminals and the wheel speed sensor 2P connector terminal (see table).

DTC	ABS Modulator-control Unit 25P Connector Terminal	Appropriate Wheel Speed Sensor 2P connector Terminal
11-13	No. 2	Right-front
13-13	No. 12	Left-front
15-13	No. 6	Right-rear
17-13	No. 14	Left-rear

WHEEL SPEED SENSOR 2P CONNECTOR
Terminal side of female terminals

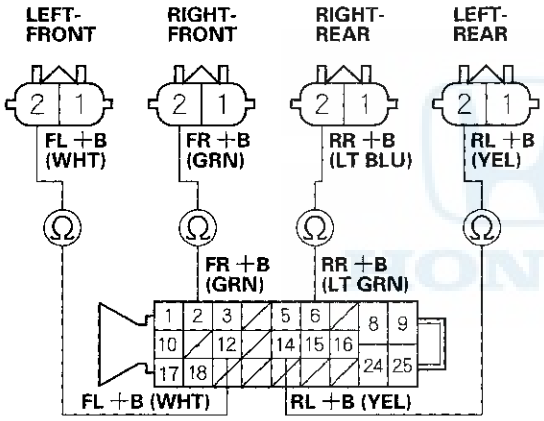

ABS MODULATOR-CONTROL UNIT 25P CONNECTOR
Wire side of female terminals

Is there continuity?

YES—Go to step 10.

NO—Repair open in the wire between the appropriate wheel speed sensor and the ABS modulator-control unit.■

10. Check for continuity between the appropriate ABS modulator-control unit 25P connector terminals and the wheel speed sensor 2P connector terminal (see table).

DTC	ABS Modulator-control Unit 25P Connector Terminal	Appropriate Wheel Speed Sensor 2P Connector Terminal
11-13	No. 18	Right-front
13-13	No. 3	Left-front
15-13	No. 15	Right-rear
17-13	No. 5	Left-rear

WHEEL SPEED SENSOR 2P CONNECTOR
Terminal side of female terminals

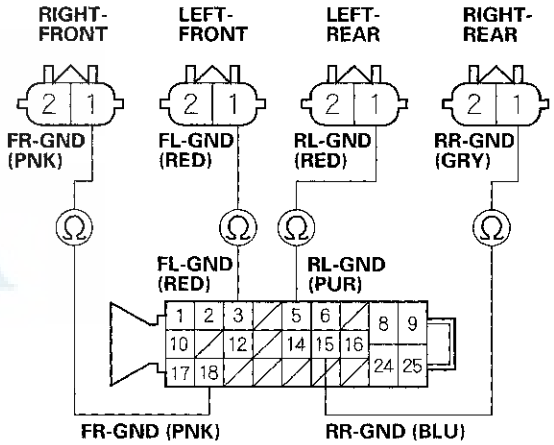

ABS MODULATOR-CONTROL UNIT 25P CONNECTOR
Wire side of female terminals

Is there continuity?

YES—Go to step 11.

NO—Repair open in the wire between the appropriate wheel speed sensor and the ABS modulator-control unit.■

11. Check for continuity between body ground and the appropriate ABS modulator-control unit 25P connector terminals (see table).

DTC	ABS Modulator-control Unit 25P Connector Terminal	
11-13	No. 2	No. 18
13-13	No. 12	No. 3
15-13	No. 6	No. 15
17-13	No. 14	No. 5

ABS MODULATOR-CONTROL UNIT 25P CONNECTOR

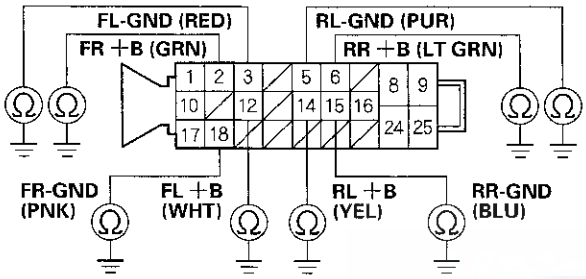

Wire side of female terminals

Is there continuity?

YES—Repair short to body ground in the wire between the appropriate wheel speed sensor and the ABS modulator-control unit.■

NO—Go to step 12.

12. Turn the ignition switch to ON (II).

13. Measure the voltage between body ground and the appropriate ABS modulator-control unit 25P connector terminals (see table).

DTC	ABS Modulator-control Unit 25P Connector Terminal	
11-13	No. 2	No. 18
13-13	No. 12	No. 3
15-13	No. 6	No. 15
17-13	No. 14	No. 5

ABS MODULATOR-CONTROL UNIT 25P CONNECTOR

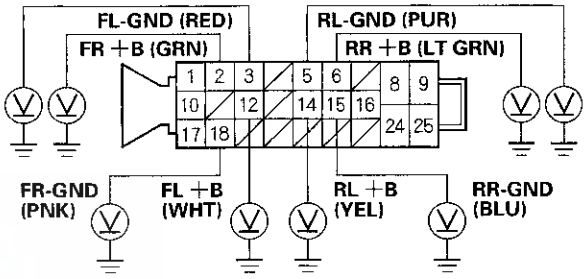

Wire side of female terminals

Is there 0.1 V or more?

YES—Repair short to power in the wire between the appropriate wheel speed sensor and the ABS modulator-control unit.■

NO—Go to step 14.

(cont'd)

DTC Troubleshooting (cont'd)

14. Turn the ignition switch to LOCK (0).

15. Substitute the appropriate wheel speed sensor with opposite wheel speed sensor, or with a known-good wheel speed sensor.

16. Reconnect all connectors.

17. Turn the ignition switch to ON (II).

18. Clear the DTC with the HDS.

19. Turn the ignition switch to LOCK (0), then turn it to ON (II) again.

20. Check for DTCs with the HDS.

    Is DTC indicated that is indicated in step 4?

    YES—Check for loose terminals in the ABS modulator-control unit 25P connector. If necessary, substitute a known-good ABS modulator-control unit (see page 19-154), and retest. ■

    NO—Replace the original wheel speed sensor (see page 19-156). ■

DTC 12-11: Right-front Wheel Speed Sensor Electrical Noise or Intermittent Interruption

DTC 14-11: Left-front Wheel Speed Sensor Electrical Noise or Intermittent Interruption

DTC 16-11: Right-rear Wheel Speed Sensor Electrical Noise or Intermittent Interruption

DTC 18-11: Left-rear Wheel Speed Sensor Electrical Noise or Intermittent Interruption

NOTE: These DTCs may be caused by electrical interference. Check for aftermarket devices installed in the vehicle when these DTCs are indicated.

1. Turn the ignition switch to ON (II).

2. Clear the DTC with the HDS.

3. Test-drive the vehicle.

   NOTE: Drive the vehicle on the road, not on a lift.

4. Check for DTCs with the HDS.

   Is DTC 12-11, 14-11, 16-11, and/or 18-11 indicated?

   YES—If DTC 12-12, 14-12, 16-12, or 18-12 is indicated at the same time, do the DTC 12-12, 14-12, 16-12, or 18-12 troubleshooting first (see page 19-133). If DTC 12-12, 14-12, 16-12, or 18-12 is not indicated, go to step 5.

   NO—If any other DTCs are indicated, go to the indicated DTCs troubleshooting. If DTCs are not indicated, there is an intermittent failure, the system is OK at this time. Check for loose terminals between the wheel speed sensor 2P connector and the ABS modulator-control unit 25P connector. Refer to intermittent failures troubleshooting (see page 19-114). ■

5. Turn the ignition switch to LOCK (0).

6. Check that the appropriate wheel speed sensor is properly mounted (see page 19-156).

DTC	Appropriate Wheel Speed Sensor
12-11	Right-front
14-11	Left-front
16-11	Right-rear
18-11	Left-rear

Is the wheel speed sensor installation OK?

YES—Check for loose terminals in the ABS modulator-control unit 25P connector. If necessary, substitute a known-good ABS modulator-control unit (see page 19-154), and retest.■

NO—Reinstall the wheel speed sensor, and check the mounting position (see page 19-156).■

DTC 12-12: Right-front Wheel Speed Sensor Short to the Other Sensor Circuit

DTC 14-12: Left-front Wheel Speed Sensor Short to the Other Sensor Circuit

DTC 16-12: Right-rear Wheel Speed Sensor Short to the Other Sensor Circuit

DTC 18-12: Left-rear Wheel Speed Sensor Short to the Other Sensor Circuit

1. Turn the ignition switch to ON (II).

2. Clear the DTC with the HDS.

3. Test-drive the vehicle at 13 mph (20 km/h) or more, and go a distance of 328 ft (100 m) or more.

   NOTE: Drive the vehicle on the road, not on a lift.

4. Check for DTCs with the HDS.

   Is DTC 12-12, 14-12, 16-12, and/or 18-12 indicated?

   YES—Go to step 5.

   NO—Intermittent failure, the system is OK at this time. Check for loose terminals between the wheel speed sensor 2P connector and the ABS modulator-control unit 25P connector. Refer to intermittent failures troubleshooting (see page 19-114).■

5. Turn the ignition switch to LOCK (0).

6. Disconnect the ABS modulator-control unit 25P connector (see step 2 on page 19-154).

(cont'd)

DTC Troubleshooting (cont'd)

7. Check for continuity between the appropriate ABS modulator-control unit 25P connector wheel speed sensor GND terminals (see table).

DTC	ABS Modulator-control Unit 25P Connector Terminal			
	Appropriate Terminal	Other Terminals		
12-12	No. 18	No. 3	No. 15	No. 5
14-12	No. 3	No. 18	No. 15	No. 5
16-12	No. 15	No. 18	No. 3	No. 5
18-12	No. 5	No. 18	No. 3	No. 15

ABS MODULATOR-CONTROL UNIT 25P CONNECTOR

DTC 12-12

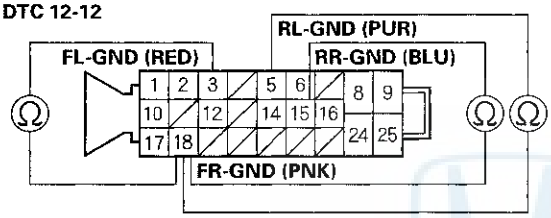

DTC 14-12

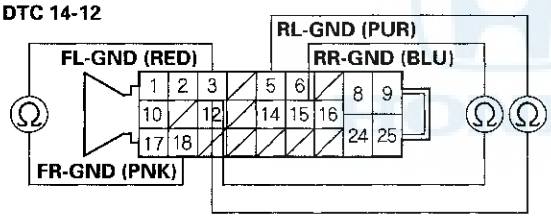

DTC 16-12

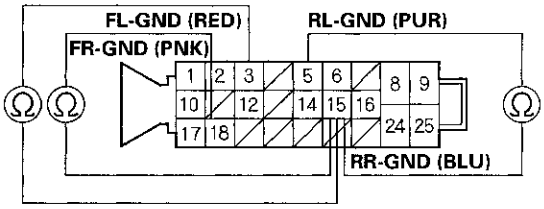

DTC 18-12

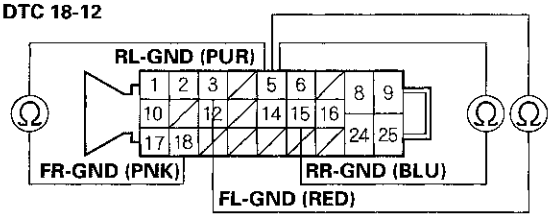

Wire side of female terminals

Is there continuity?

YES—Repair short in the wires between the appropriate wheel speed sensor and the ABS modulator-control unit. ■

NO—Check for loose terminals in the ABS modulator-control unit 25P connector. If necessary, substitute a known-good ABS modulator-control unit (see page 19-154), and retest. ■

DTC 12-21: Right-front Wheel Speed Sensor Installation Error

DTC 14-21: Left-front Wheel Speed Sensor Installation Error

DTC 16-21: Right-rear Wheel Speed Sensor Installation Error

DTC 18-21: Left-rear Wheel Speed Sensor Installation Error

1. Test-drive the vehicle at 7 mph (10 km/h).

   NOTE: Drive the vehicle on the road, not on a lift.

2. Check the RF, LF, RR, LR WHEEL SPEED in the ABS DATA LIST with the HDS.

   Are all four values the same?

   YES—Intermittent failure, the system is OK at this time. Check for loose terminals between the wheel speed sensor 2P connector and the ABS modulator-control unit 25P connector. Refer to intermittent failures troubleshooting (see page 19-114). ■

   NO—Go to step 3.

3. Turn the ignition switch to LOCK (0).

4. Check that the appropriate wheel speed sensor is properly mounted (see page 19-156).

DTC	Appropriate Wheel Speed Sensor
12-21	Right-front
14-21	Left-front
16-21	Right-rear
18-21	Left-rear

Is the wheel speed sensor installation OK?

YES—Replace the appropriate wheel speed sensor (see page 19-156). ■

NO—Reinstall the wheel speed sensor, and check the mounting position (see page 19-156). ■

DTC 12-22: Right-front Wheel Speed Sensor Installation Error (19 mph (30 km/h) or More)

DTC 14-22: Left-front Wheel Speed Sensor Installation Error (19 mph (30 km/h) or More)

DTC 16-22: Right-rear Wheel Speed Sensor Installation Error (19 mph (30 km/h) or More)

DTC 18-22: Left-rear Wheel Speed Sensor Installation Error (19 mph (30 km/h) or More)

1. Test-drive the vehicle between 19 mph (30 km/h) and 31 mph (50 km/h) for 70 seconds or more.

   NOTE: Drive the vehicle on the road, not on a lift.

2. Check the RF, LF, RR, LR WHEEL SPEED in the ABS DATA LIST with the HDS.

   Are all four values the same?

   YES—Intermittent failure, the system is OK at this time. Check for loose terminals between the wheel speed sensor 2P connector and the ABS modulator-control unit 25P connector. Refer to intermittent failures troubleshooting (see page 19-114). ■

   NO—Go to step 3.

3. Turn the ignition switch to LOCK (0).

4. Check that the appropriate wheel speed sensor is properly mounted (see page 19-156).

DTC	Appropriate Wheel Speed Sensor
12-22	Right-front
14-22	Left-front
16-22	Right-rear
18-22	Left-rear

Is the wheel speed sensor installation OK?

YES—Replace the appropriate wheel speed sensor (see page 19-156). ■

NO—Reinstall the wheel speed sensor, and check the mounting position (see page 19-156). ■

DTC Troubleshooting (cont'd)

DTC 12-23: Right-front Wheel Speed Sensor Installation Error (0 to 9 mph (0 to 15 km/h))

DTC 14-23: Left-front Wheel Speed Sensor Installation Error (0 to 9 mph (0 to 15 km/h))

DTC 16-23: Right-rear Wheel Speed Sensor Installation Error (0 to 9 mph (0 to 15 km/h))

DTC 18-23: Left-rear Wheel Speed Sensor Installation Error (0 to 9 mph (0 to 15 km/h))

1. Test-drive the vehicle between 1 mph (1 km/h) and 9 mph (15 km/h).

   NOTE: Drive the vehicle on the road, not on a lift.

2. Check the RF, LF, RR, LR WHEEL SPEED in the ABS DATA LIST with the HDS.

   Are all four values the same?

   YES—Intermittent failure, the system is OK at this time. Check for loose terminals between the wheel speed sensor 2P connector and the ABS modulator-control unit 25P connector. Refer to intermittent failures troubleshooting (see page 19-114).■

   NO—Go to step 3.

3. Turn the ignition switch to LOCK (0).

4. Check that the appropriate wheel speed sensor is properly mounted (see page 19-156).

DTC	Appropriate Wheel Speed Sensor
12-23	Right-front
14-23	Left-front
16-23	Right-rear
18-23	Left-rear

   Is the wheel speed sensor installation OK?

   YES—Replace the appropriate wheel speed sensor (see page 19-156).■

   NO—Reinstall the wheel speed sensor, and check the mounting position (see page 19-156).■

DTC 21-11: Right-front Magnetic Encoder (Wheel Bearing) Malfunction (Pulse Missing)

DTC 22-11: Left-front Magnetic Encoder (Wheel Bearing) Malfunction (Pulse Missing)

DTC 23-11: Right-rear Magnetic Encoder (Wheel Bearing) Malfunction (Pulse Missing)

DTC 24-11: Left-rear Magnetic Encoder (Wheel Bearing) Malfunction (Pulse Missing)

1. Turn the ignition switch to ON (II).

2. Clear the DTC with the HDS.

3. Test-drive the vehicle at 13 mph (20 km/h) or more, and go a distance of 328 ft (100 m) or more.

   NOTE: Drive the vehicle on the road, not on a lift.

4. Check for DTCs with the HDS.

   Is DTC 21-11, 22-11, 23-11, and/or 24-11 indicated?

   YES—Go to step 5.

   NO—Intermittent failure, the system is OK at this time. Check for loose terminals between the wheel speed sensor 2P connector and the ABS modulator-control unit 25P connector. Refer to intermittent failures troubleshooting (see page 19-114).■

5. Turn the ignition switch to LOCK (0).

6. Inspect the appropriate magnetic encoder for damage, debris, and correct installation.

DTC	Appropriate Magnetic Encoder	Note
21-11	Right-front	Remove the driveshaft outboard joint from the appropriate wheel hub (see page 18-14).
22-11	Left-front	
23-11	Right-rear	Remove the hub bearing unit (see page 18-31).
24-11	Left-rear	

Is the magnetic encoder surface OK?

YES—Remove the debris from the magnetic encoder, or replace the wheel bearing (front) or the hub bearing unit (rear): ■

- Front: Replace the front wheel bearing (see page 18-18).
- Rear: Replace the rear hub bearing unit (see page 18-31).

NO—Clean off debris from the appropriate magnetic encoder surface on the wheel bearing or the hub bearing unit, then go to step 1, and recheck. If the DTC is still present, replace the appropriate wheel bearing or hub bearing unit.

DTC 31-xx*: ABS Right-front Inlet Solenoid Valve Malfunction

DTC 32-xx*: ABS Right-front Outlet Solenoid Valve Malfunction

DTC 33-xx*: ABS Left-front Inlet Solenoid Valve Malfunction

DTC 34-xx*: ABS Left-front Outlet Solenoid Valve Malfunction

DTC 35-xx*: ABS Right-rear Inlet Solenoid Valve Malfunction

DTC 36-xx*: ABS Right-rear Outlet Solenoid Valve Malfunction

DTC 37-xx*: ABS Left-rear Inlet Solenoid Valve Malfunction

DTC 38-xx*: ABS Left-rear Outlet Solenoid Valve Malfunction

* : Any two-character subcode (see table)

Subcode	Malfunction	Note (DTC)
01	Solenoid Initial Pulse	31-01, 32-01, 33-01, 34-01, 35-01, 36-01, 37-01, 38-01
21	Solenoid Pulse	31-21, 32-21, 33-21, 34-21, 35-21, 36-21, 37-21, 38-21
22	Solenoid Speculative	31-22, 32-22, 33-22, 34-22, 35-22, 36-22, 37-22, 38-22
23	Solenoid Stuck ON	31-23, 32-23, 33-23, 34-23, 35-23, 36-23, 37-23, 38-23

1. Turn the ignition switch to ON (II).
2. Clear the DTC with the HDS.
3. Turn the ignition switch to LOCK (0), then turn it to ON (II) again.

(cont'd)

DTC Troubleshooting (cont'd)

4. Check for DTCs with the HDS.

   Is DTC 31-xx, 32-xx, 33-xx, 34-xx, 35-xx, 36-xx, 37-xx, or 38-xx indicated?

   YES—Replace the ABS modulator-control unit (see page 19-154).■

   NO—Intermittent failure, the system is OK at this time.■

DTC 41-21: Right-front Wheel Lock

DTC 42-21: Left-front Wheel Lock

DTC 43-21: Right-rear Wheel Lock

DTC 44-21: Left-rear Wheel Lock

The DTCs may be indicated under these conditions:
- The vehicle goes into a spin.
- The ABS continues to operate for a long time.
- Snow, dirt, or debris build-up on the wheel speed sensor or magnetic encoder.
- Misadjusted brake pedal position switch.
- Contaminated brake fluid.

1. Raise the vehicle, and support it with safety stands in the proper locations (see page 1-10).

2. Turn the appropriate wheel by hand.

DTC	Appropriate Wheel
41-21	Right-front
42-21	Left-front
43-21	Right-rear
44-21	Left-rear

   Is there brake drag?

   YES—Repair the brake drag.■

   NO—Go to step 3.

3. Check that the appropriate wheel speed sensor is properly mounted (see page 19-156).

   Is the wheel speed sensor installation OK?

   YES—Go to step 4.

   NO—Reinstall the wheel speed sensor, and check the mounting position (see page 19-156).■

4. Turn the ignition switch to ON (II).

5. Clear the DTC with the HDS.

6. Test-drive the vehicle at 7 mph (10 km/h) for 20 seconds or more.

   NOTE: Drive the vehicle on the road, not on a lift.

7. Check for DTCs with the HDS.

   Is DTC 41-21, 42-21, 43-21, or 44-21 indicated?

   YES—Check for loose terminals between the wheel speed sensor 2P connector and the ABS modulator-control unit 25P connector. If necessary, substitute a known-good ABS modulator-control unit (see page 19-154), and retest.■

   NO—If any other DTCs are indicated, go to the indicated DTCs troubleshooting. If DTCs are not indicated, intermittent failure, the system is OK at the time■

DTC 51-11: Motor Lock

DTC 51-13: Motor Drive Circuit Malfunction

1. Turn the ignition switch to ON (II).

2. Clear the DTC with the HDS.

3. Turn the ignition switch to LOCK (0), then turn it to ON (II) again.

4. Wait 5 seconds.

5. Operate any one of the four solenoids, as listed, in the ABS FUNCTION TEST five times with the HDS.

-LFT FT SOLENOID
-RT FT SOLENOID
-LFT REAR SOLENOID
-RT REAR SOLENOID

6. Check for DTCs with the HDS.

   Is DTC 51-11 or 51-13 indicated?

   YES—Replace the ABS modulator-control unit (see page 19-154).■

   NO—Intermittent failure, the system is OK at this time.■

HONDA

DTC Troubleshooting (cont'd)

DTC 51-12: Motor Drive Circuit Malfunction

1. Turn the ignition switch to ON (II).
2. Clear the DTC with the HDS.
3. Turn the ignition switch to LOCK (0), then turn it to ON (II) again.
4. Check for DTCs with the HDS.

   Is DTC 51-12 indicated?

   YES—Go to step 5.

   NO—Intermittent failure, the system is OK at this time. Check for loose terminals at the ABS modulator-control unit 25P connector. Refer to intermittent failures troubleshooting (see page 19-114).■

5. Turn the ignition switch to LOCK (0).
6. Check the No. 3 (30 A) fuse in the under-hood fuse/relay box.

   Is the fuse blown?

   YES—Go to step 7.

   NO—Reinstall the checked fuse, then go to step 14.

7. Disconnect the ABS modulator-control unit 25P connector (see step 2 on page 19-154).
8. Check for continuity between ABS modulator-control unit 25P connector terminal No. 9 and body ground.

ABS MODULATOR-CONTROL UNIT 25P CONNECTOR

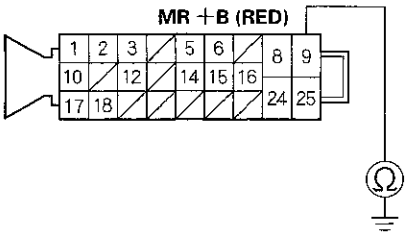

Wire side of female terminals

Is there continuity?

YES—Repair short to body ground in the wire between the No. 3 (30 A) fuse in the under-hood fuse/relay box and the ABS modulator-control unit.■

NO—Install a new No. 3 (30 A) fuse in the under-hood fuse/relay box, then go to step 9.

9. Reconnect the ABS modulator-control unit 25P connector.

10. Turn the ignition switch to ON (II).

11. Clear the DTC with the HDS.

12. Turn the ignition switch to LOCK (0), then turn it to ON (II) again.

13. Check for DTCs with the HDS.

    Is DTC 51-12 indicated?

    YES—Replace the ABS modulator-control unit (see page 19-154).■

    NO—Troubleshooting is complete.■

14. Disconnect the ABS modulator-control unit 25P connector (see step 2 on page 19-154).

15. Measure the voltage between ABS modulator-control unit 25P connector terminal No. 9 and body ground.

ABS MODULATOR-CONTROL UNIT 25P CONNECTOR

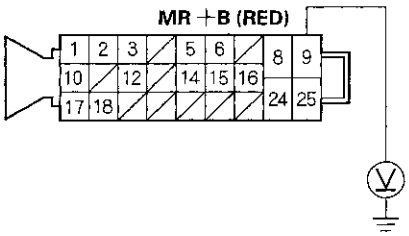

Wire side of female terminals

Is there battery voltage?

YES—Check for loose terminals in the ABS modulator-control unit 25P connector. If necessary, substitute a known-good ABS modulator-control unit (see page 19-154), and retest.■

NO—Repair open in the wire between the No. 3 (30 A) fuse in the under-hood fuse/relay box and the ABS modulator-control unit.■

DTC Troubleshooting (cont'd)

DTC 52-12: Motor Stuck OFF

1. Turn the ignition switch to ON (II).
2. Clear the DTC with the HDS.
3. Turn the ignition switch to LOCK (0), then turn it to ON (II) again.
4. Operate any one of the four solenoids, as listed, in the ABS FUNCTION TEST five times with the HDS.

-LFT FT SOLENOID
-RT FT SOLENOID
-LFT REAR SOLENOID
-RT REAR SOLENOID

5. Check for DTCs with the HDS.

   Is DTC 52-12 indicated?

   YES—Replace the ABS modulator-control unit (see page 19-154).■

   NO—Intermittent failure, the system is OK at this time.■

DTC 53-01: Motor Relay Stuck ON 1

DTC 53-12: Motor Relay Stuck ON 2

1. Turn the ignition switch to ON (II).
2. Clear the DTC with the HDS.
3. Turn the ignition switch to LOCK (0), then turn it to ON (II) again.
4. Check for DTCs with the HDS.

   Is DTC 53-01 or 53-12 indicated?

   YES—Go to step 5.

   NO—Intermittent failure, the system is OK at this time. Check for loose terminals at the ABS modulator-control unit 25P connector. Refer to intermittent failures troubleshooting (see page 19-114).■

5. Turn the ignition switch to LOCK (0).
6. Disconnect the ABS modulator-control unit 25P connector (see step 2 on page 19-154).

7. Check for continuity between ABS modulator-control unit 25P connector terminal No. 25 and body ground.

ABS MODULATOR-CONTROL UNIT 25P CONNECTOR

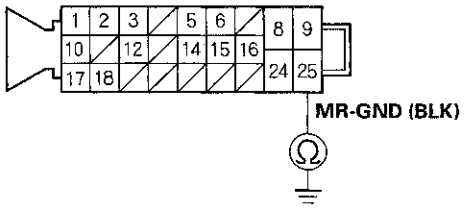

Wire side of female terminals

Is there continuity?

YES—Check for loose terminals in the ABS modulator-control unit 25P connector. If necessary, substitute a known-good ABS modulator-control unit (see page 19-154), and retest.■

NO—Repair open in the wire between the ABS modulator-control unit and body ground (G202).■

DTC 54-03: Fail-safe Relay 1 Stuck ON

1. Turn the ignition switch to ON (II).
2. Clear the DTC with the HDS.
3. Turn the ignition switch to LOCK (0), then turn it to ON (II) again.
4. Check for DTCs with the HDS.

Is DTC 54-03 indicated?

YES—Replace the ABS modulator-control unit (see page 19-154).■

NO—Intermittent failure, the system is OK at this time.■

DTC Troubleshooting (cont'd)

DTC 54-04: Fail-safe Relay 1 Stuck OFF (Initial)

DTC 54-21: Fail-safe Relay 1 Stuck OFF (Main)

1. Turn the ignition switch to ON (II).
2. Clear the DTC with the HDS.
3. Turn the ignition switch to LOCK (0), then turn it to ON (II) again.
4. Check for DTCs with the HDS.

   Is DTC 54-04 or 54-21 indicated?

   YES—Go to step 5.

   NO—Intermittent failure, the system is OK at this time. Check for loose terminals at the ABS modulator-control unit 25P connector. Refer to intermittent failures troubleshooting (see page 19-114).■

5. Turn the ignition switch to LOCK (0).
6. Check the No. 3 (30 A) fuse in the under-hood fuse/relay box.

   Is the fuse blown?

   YES—Go to step 7.

   NO—Reinstall the checked fuse, then go to step 14.

7. Disconnect the ABS modulator-control unit 25P connector (see step 2 on page 19-154).
8. Check for continuity between ABS modulator-control unit 25P connector terminal No. 8 and body ground.

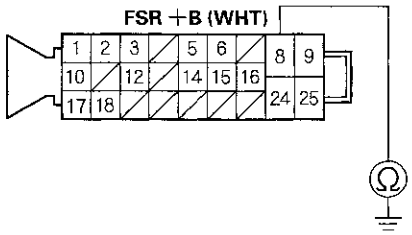

Wire side of female terminals

   Is there continuity?

   YES—Repair short to body ground in the wire between the No. 3 (30 A) fuse in the under-hood fuse/relay box and the ABS modulator-control unit.■

   NO—Install a new No. 3 (30 A) fuse in the under-hood fuse/relay box, then go to step 9.

9. Reconnect the ABS modulator-control unit 25P connector.
10. Turn the ignition switch to ON (II).
11. Clear the DTC with the HDS.
12. Turn the ignition switch to LOCK (0), then turn it to ON (II) again.
13. Check for DTCs with the HDS.

    Is DTC 54-04 or 54-21 indicated?

    YES—Replace the ABS modulator-control unit (see page 19-154).■

    NO—Troubleshooting is complete.■

14. Disconnect the ABS modulator-control unit 25P connector (see step 2 on page 19-154).

15. Measure the voltage between ABS modulator-control unit 25P connector terminal No. 8 and body ground.

ABS MODULATOR-CONTROL UNIT 25P CONNECTOR

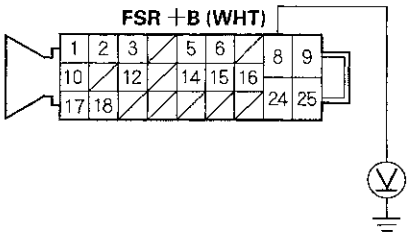

Wire side of female terminals

Is there battery voltage?

YES—Check for loose terminals in the ABS modulator-control unit 25P connector. If necessary, substitute a known-good ABS modulator-control unit (see page 19-154), and retest.■

NO—Repair open in the wire between the No. 3 (30 A) fuse in the under-hood fuse/relay box and the ABS modulator-control unit.■

DTC 61-01: ABS Modulator-control Unit Initial IG Low Voltage

DTC 61-21: ABS Modulator-control Unit Power Source Low Voltage 1

DTC 61-22: ABS Modulator-control Unit Power Source Low Voltage 2

DTC 61-23: ABS Modulator-control Unit Power Source Low Voltage 3

1. Turn the ignition switch to ON (II).

2. Clear the DTC with the HDS.

3. Turn the ignition switch to LOCK (0), then start the engine.

4. Check for DTCs with the HDS.

   Is DTC 61-01, 61-21, 61-22, or 61-23 indicated?

   YES—Go to step 5.

   NO—Intermittent failure, the system is OK at this time. Check for loose terminals at the ABS modulator-control unit 25P connector. Refer to intermittent failures troubleshooting (see page 19-114).■

5. Check and note BATTERY voltage in the ABS DATA LIST with the HDS.

6. Using a voltmeter, measure and note the voltage between the battery terminals.

   NOTE: If the battery voltage is below 9.5 V, check the 12 V battery performance (see page 22-61), and troubleshoot the charging system indicator circuit (see page 12-179).

(cont'd)

DTC Troubleshooting (cont'd)

7. Compare the data list voltage noted in step 5 to the battery voltage in step 6.

   Is the difference between the two voltage readings less than 3 V?

   YES—Intermittent failure, the system is OK at this time. Check for loose terminals at the ABS modulator-control unit 25P connector. Refer to intermittent failures troubleshooting (see page 19-114). If the code resets after clearing, replace the ABS modulator-control unit (see page 19-154).■

   NO—Check for loose terminals in the ABS modulator-control unit 25P connector. If necessary, substitute a known-good ABS modulator-control unit (see page 19-154), and retest.■

DTC 62-21: ABS Modulator-control Unit IG High Voltage

1. Turn the ignition switch to ON (II).
2. Clear the DTC with the HDS.
3. Turn the ignition switch to LOCK (0), then start the engine.
4. Check for DTCs with the HDS.

   Is DTC 62-21 indicated?

   YES—Go to step 5.

   NO—Intermittent failure, the system is OK at this time.■

5. Check and note BATTERY voltage in the ABS DATA LIST with the HDS.
6. Using a voltmeter, measure and note the voltage between the battery terminals.

   NOTE: If the voltage is above 15.1 V, troubleshoot the charging system indicator circuit (see page 12-179).

7. Compare the data list voltage noted in step 5 to the battery voltage in step 6.

   Is the difference between the two voltage readings less than 3 V?

   YES—Intermittent failure, the system is OK at this time. Check for loose terminals at the ABS modulator-control unit 25P connector. Refer to intermittent failures troubleshooting (see page 19-114). If the code resets after clearing, replace the ABS modulator-control unit (see page 19-154).■

   NO—Replace the ABS modulator-control unit (see page 19-154), and retest.■

DTC 71-21: Right-front or Left-rear Different Diameter Tire Malfunction

DTC 71-22: Left-front or Right-rear Different Diameter Tire Malfunction

DTC 71-23: Right-front and Right-rear Different Diameter Tire Malfunction

DTC 71-24: Left-front and Left-rear Different Diameter Tire Malfunction

DTC 71-25: Right-front and Left-front Different Diameter Tire Malfunction

DTC 71-26: Right-rear and Left-rear Different Diameter Tire Malfunction

NOTE: The DTC is indicated when the vehicle has a different diameter tire(s) compared to the other tires.

DTC	Sectional
71-21	Right-front or left-rear
71-22	Left-front or right-rear
71-23	Right-front and right-rear
71-24	Left-front and left-rear
71-25	Right-front and left-front
71-26	Right-rear and left-rear

1. Check the tires for proper inflation and the correct size (see page 18-6).
2. Turn the ignition switch to ON (II).
3. Clear the DTC with the HDS.
4. Test-drive the vehicle.

   NOTE: Drive the vehicle on the road, not on a lift.

5. Check for DTCs with the HDS.

   Is DTC 71-21, 71-22, 71-23, 71-24, 71-25, or 71-26 indicated?

   YES—Replace tires as needed until all their diameters match (see page 18-6).■

   NO—Intermittent failure, the system is OK at this time.■

HONDA

DTC Troubleshooting (cont'd)

DTC 81-xx*: Central Processing Unit (CPU) Internal Circuit Malfunction

*: Any two-character subcode (Except these combinations: DTC 81-11, 81-51, and 81-52)

1. Turn the ignition switch to ON (II).
2. Clear the DTC with the HDS.
3. Turn the ignition switch to LOCK (0), then turn it to ON (II) again.
4. Check for DTCs with the HDS.

   Is DTC 81-xx indicated?

   YES—If DTC 81-11, 81-51, or 81-52 is indicated at the same time, do the appropriate troubleshooting first. If DTC 81-11, 81-51, or 81-52 is not indicated, replace the ABS modulator-control unit (see page 19-154), and retest. ■

   NO—Intermittent failure, the system is OK at this time. ■

DTC 81-11: Central Processing Unit (CPU) Internal Circuit Malfunction

DTC 81-51: Central Processing Unit (CPU) Internal Circuit Malfunction

DTC 81-52: Central Processing Unit (CPU) Internal Circuit Malfunction

1. Turn the ignition switch to ON (II).
2. Clear the DTC with the HDS.
3. Test-drive the vehicle.

   NOTE: Drive the vehicle on the road, not on a lift.

4. Check for DTCs with the HDS.

   Is DTC 81-11, 81-51, or 81-52 indicated?

   YES—Replace the ABS modulator-control unit (see page 19-154). ■

   NO—Intermittent failure, the system is OK at this time. ■

DTC 86-01: F-CAN Bus-off Malfunction

1. Turn the ignition switch to ON (II).
2. Clear the DTC with the HDS.
3. Turn the ignition switch to LOCK (0), then turn it to ON (II) again.
4. Check for DTCs with the HDS.

   Is DTC 86-01 indicated?

   YES—Go to step 5.

   NO—Intermittent failure, the system is OK at this time. Check for loose terminals between PCM connector A (44P) and the ABS modulator-control unit 25P connector. Refer to intermittent failures troubleshooting (see page 19-114).■

5. Turn the ignition switch to LOCK (0).
6. Short the SCS line with the HDS.
7. Disconnect PCM connector A (44P).
8. Disconnect the ABS modulator-control unit 25P connector (see step 2 on page 19-154).
9. Check for continuity between ABS modulator-control unit 25P connector terminals and PCM connector A (44P) terminals (see table).

Sign	ABS Modulator-control Unit 25P Connector Terminal	PCM Connector A (44P) Terminal
CAN-L	No. 17	No. 37
CAN-H	No. 1	No. 36

ABS MODULATOR-CONTROL UNIT 25P CONNECTOR
Wire side of female terminals

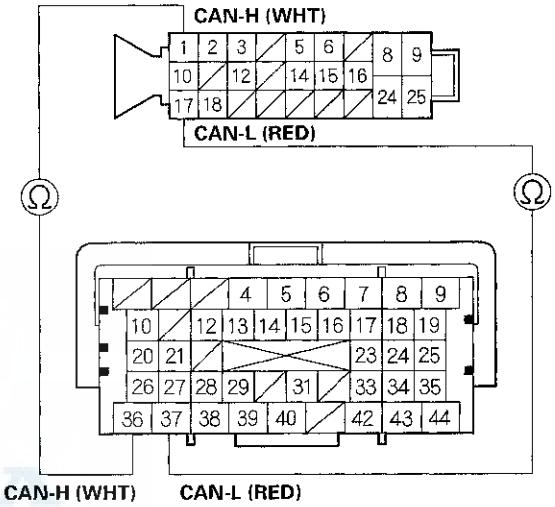

PCM CONNECTOR A (44P)
Terminal side of female terminals

Is there continuity?

YES—Check for loose terminals in the ABS modulator-control unit 25P connector. If necessary, substitute a known-good ABS modulator-control unit (see page 19-154), and retest.■

NO—Repair open in the wire between the PCM and the ABS modulator-control unit.■

DTC Troubleshooting (cont'd)

DTC 86-24: F-CAN Communication with Engine Malfunction

DTC 86-25: F-CAN Communication with Engine Malfunction

1. Turn the ignition switch to ON (II).
2. Clear the DTC with the HDS.
3. Test-drive the vehicle at 7 mph (10 km/h) or more.

   NOTE: Drive the vehicle on the road, not on a lift.
4. Check for DTCs with the HDS.

   Is DTC 86-24 and/or 86-25 indicated?

   YES—Go to step 5.

   NO—Intermittent failure, the system is OK at this time. Check for loose terminals between PCM connector A (44P) and the ABS modulator-control unit 25P connector. Refer to intermittent failures troubleshooting (see page 19-114).■
5. Turn the ignition switch to LOCK (0).
6. Short the SCS line with the HDS.
7. Disconnect PCM connector A (44P).
8. Disconnect the ABS modulator-control unit 25P connector (see step 2 on page 19-154).
9. Check for continuity between ABS modulator-control unit 25P connector terminals and PCM connector A (44P) terminals (see table).

Sign	ABS Modulator-control Unit 25P Connector Terminal	PCM Connector A (44P) Terminal
CAN-L	No. 17	No. 37
CAN-H	No. 1	No. 36

ABS MODULATOR-CONTROL UNIT 25P CONNECTOR
Wire side of female terminals

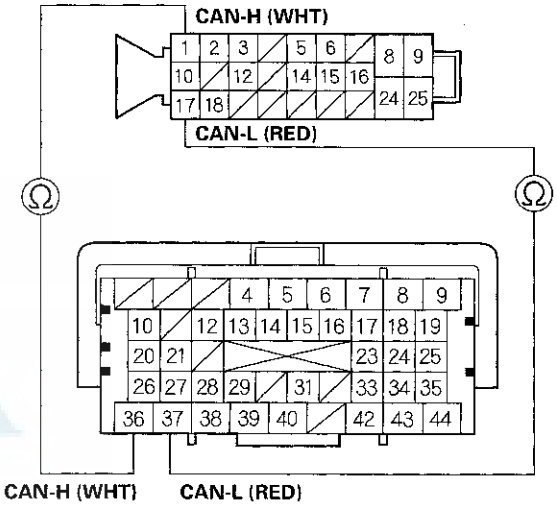

PCM CONNECTOR A (44P)
Terminal side of female terminals

Is there continuity?

YES—Go to step 10.

NO—Repair open in the wire between the PCM and the ABS modulator-control unit.■

10. Reconnect all connectors.

11. Update the PCM if it does not have the latest software (see page 11-236), or substitute a known-good PCM (see page 11-7).

12. Clear the DTC with the HDS.

13. Test-drive the vehicle at 7 mph (10 km/h) or more.

    NOTE: Drive the vehicle on the road, not on a lift.

14. Check for DTCs with the HDS.

    Is DTC 86-24 and/or 86-25 indicated?

    YES—Replace the ABS modulator-control unit (see page 19-154).

    NO—If the PCM was updated, troubleshooting is complete. If the PCM was substituted, replace the original PCM (see page 11-238). ■

DTC 86-FF: F-CAN Communication with ABS Malfunction

1. Turn the ignition switch to ON (II).

2. Clear the DTC with the HDS.

3. Turn the ignition switch to LOCK (0), then turn it to ON (II) again.

4. Check for DTCs with the HDS.

   Is DTC 86-FF indicated?

   YES—Replace the ABS modulator-control unit (see page 19-154). ■

   NO—Intermittent failure, the system is OK at this time. ■

HONDA

Symptom Troubleshooting

ABS indicator and brake system indicator do not go off

1. Turn the ignition switch to LOCK (0).

2. Check the No. 4 (7.5 A) fuse in the under-dash fuse/relay box.

   Is the fuse blown?

   YES—Go to step 3.

   NO—Reinstall the checked fuse, then go to step 8.

3. Disconnect the ABS modulator-control unit 25P connector (see step 2 on page 19-154).

4. Check for continuity between ABS modulator-control unit 25P connector terminal No. 16 and body ground.

ABS MODULATOR-CONTROL UNIT 25P CONNECTOR

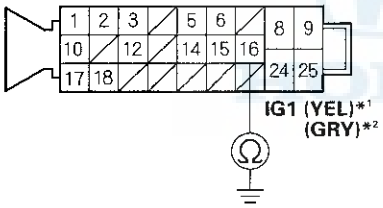

Wire side of female terminals

***1: '06 model**
***2: '07-09 models**

Is there continuity?

YES—Repair short to body ground in the wire between the No. 4 (7.5 A) fuse in the under-dash fuse/relay box and the ABS modulator-control unit. ■

NO—Install a new No. 4 (7.5 A) fuse in the under-dash fuse/relay box, then go to step 5.

5. Reconnect the ABS modulator-control unit 25P connector.

6. Turn the ignition switch to ON (II).

7. Check the ABS indicator and the brake system indicator for several seconds when the ignition switch is turned to ON (II).

   Does the indicators come on then go off?

   YES—Troubleshooting is complete. ■

   NO—Replace the ABS modulator-control unit (see page 19-154). ■

8. Disconnect the ABS modulator-control unit 25P connector (see step 2 on page 19-154).

9. Turn the ignition switch to ON (II).

10. Measure the voltage between ABS modulator-control unit 25P connector terminal No. 16 and body ground.

ABS MODULATOR-CONTROL UNIT 25P CONNECTOR

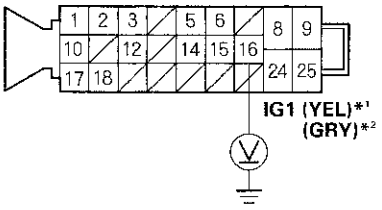

Wire side of female terminals

***1: '06 model**
***2: '07-09 models**

Is there battery voltage?

YES—Go to step 11.

NO—Repair open in the wire between the No. 4 (7.5 A) fuse in the under-dash fuse/relay box and the ABS modulator-control unit. ■

11. Turn the ignition switch to LOCK (0).

12. Check for continuity between ABS modulator-control unit 25P connector terminal No. 24 and body ground.

ABS MODULATOR-CONTROL UNIT 25P CONNECTOR

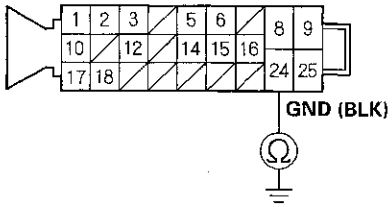

Wire side of female terminals

Is there continuity?

YES—Go to step 13.

NO—Repair open in the wire between the ABS modulator-control unit and body ground (G202). ■

13. Disconnect the gauge control module (tach) 36P connector.

14. Check for continuity between the ABS modulator-control unit 25P connector terminal and gauge control module (tach) 36P connector terminal (see table).

Sign	ABS Modulator-control Unit 25P Connector Terminal	Gauge Control Module (Tach) 36P Connector Terminal
CAN-L	No. 17	No. 19
CAN-H	No. 1	No. 1

ABS MODULATOR-CONTROL UNIT 25P CONNECTOR
Wire side of female terminals

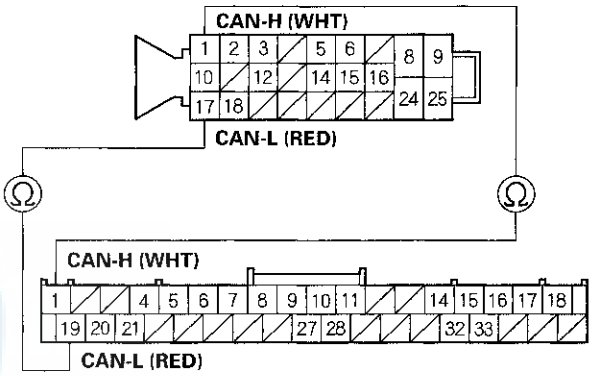

GAUGE CONTROL MODULE (TACH) 36P CONNECTOR
Wire side of female terminals

Is there continuity?

YES—Check for loose terminals in the ABS modulator-control unit 25P connector. If necessary, substitute a known-good ABS modulator-control unit (see page 19-154), and retest. ■

NO—Repair open in the wire between the gauge control module (tach) and the ABS modulator-control unit. ■

ABS Modulator-Control Unit Removal and Installation

NOTE:
- Do not spill brake fluid on the vehicle; it may damage the paint; if brake fluid gets on the paint, wash it off immediately with water.
- Be careful not to damage or deform the brake lines during removal and installation.
- Plug the ends of the hoses and the joints to prevent spilling brake fluid.

Removal

1. Turn the ignition switch to LOCK (0).

2. Disconnect the ABS modulator-control unit 25P connector (A) by pulling up the lock (B); the connector disconnects itself.

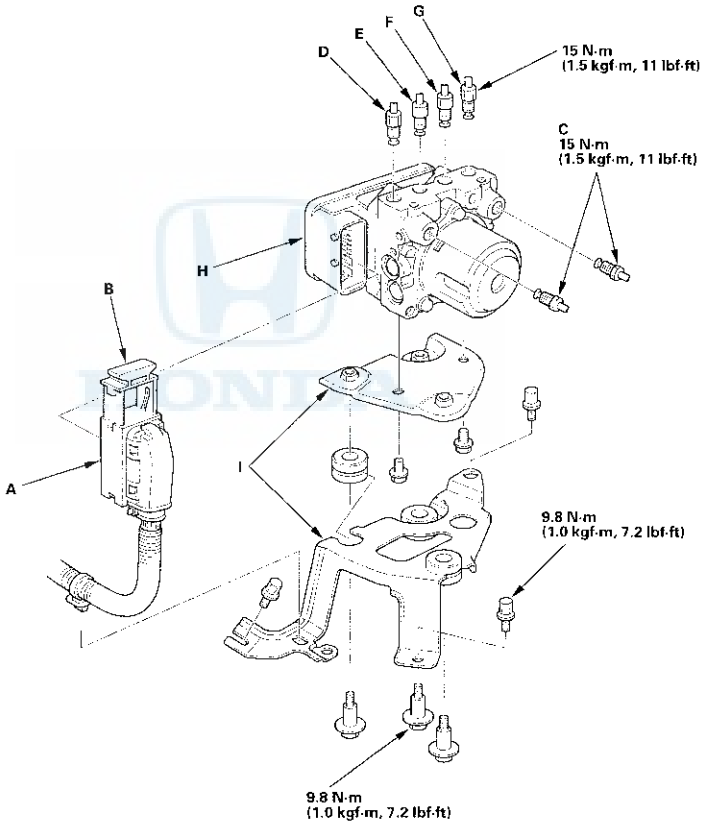

3. Disconnect the six brake lines from the ABS modulator-control unit.

   NOTE: Brake lines are connected to the master cylinder (C) and to the right-front (D), the left-rear (E), the right-rear (F), and the left-front (G) brake systems.

4. Remove the ABS modulator-control unit (H) with the brackets (I) from the body.

5. Remove the ABS modulator-control unit from the brackets.

6. Separate the bracket if necessary.

Installation

1. Install the ABS modulator-control unit onto the brackets.
2. Install the bracket with the ABS modulator-control unit to the body.
3. Reconnect the six brake lines, then tighten the flare nuts to the specified torque.
4. Align the connecting surface of the ABS modulator-control unit 25P connector to the ABS modulator-control unit.
5. Lower the lock of the ABS modulator-control unit 25P connector, then confirm the connector is fully seated.
6. Bleed the brake system (except the servo unit and power unit) (see page 19-97).
7. Start the engine, and make sure the ABS indicator goes off.
8. Test-drive the vehicle, and make sure the ABS indicator does not come on.

   NOTE: If the brake pedal is spongy, there may be air trapped in the modulator which could then be induced into the normal brake system during modulation. Bleed the brake system (except the servo unit and power unit) again (see page 19-97).

HONDA

Wheel Speed Sensor Replacement

Special Tools Required
Guide pin tool 07AAG-SVBA100

Front

1. Turn the ignition switch to LOCK (0).
2. Release the connector clamp (A), then disconnect the wheel speed sensor connector (B).

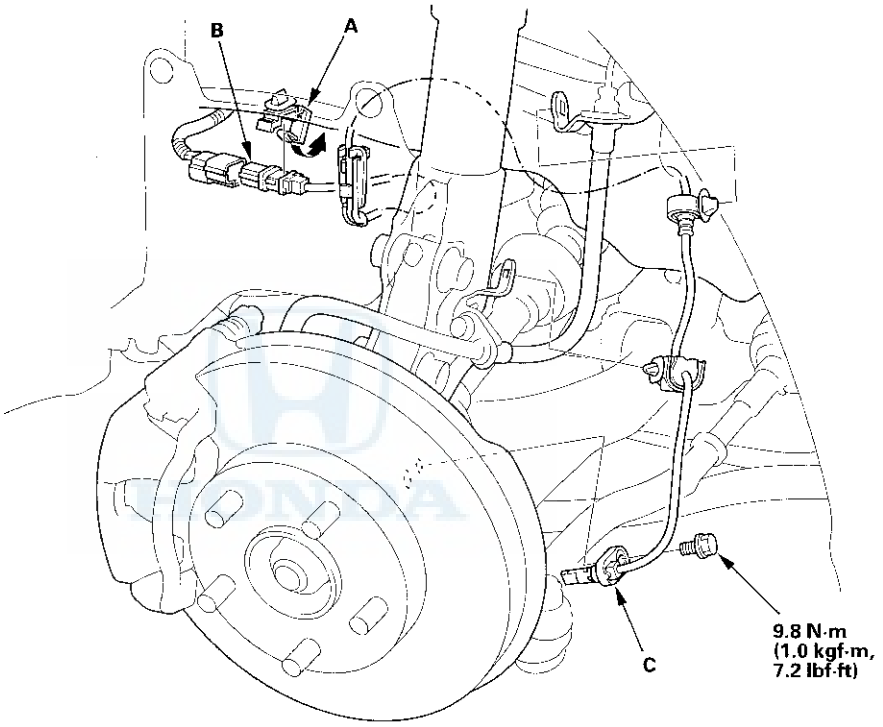

3. Remove the clips, the bolt, and the wheel speed sensor (C).
4. Install the wheel speed sensor in the reverse order of removal, and note these items:
   - Install the sensor carefully to avoid twisting the wires.
   - If the wheel speed sensor comes in contact with the wheel bearing, it is faulty. Investigate the cause before replacing the sensor.
5. Start the engine, and make sure the ABS indicator goes off.
6. Test-drive the vehicle, and make sure the ABS indicator does not come on.

Rear

1. Turn the ignition switch to LOCK (0).
2. Release the connector clamp (A), then disconnect the wheel speed sensor connector (B).

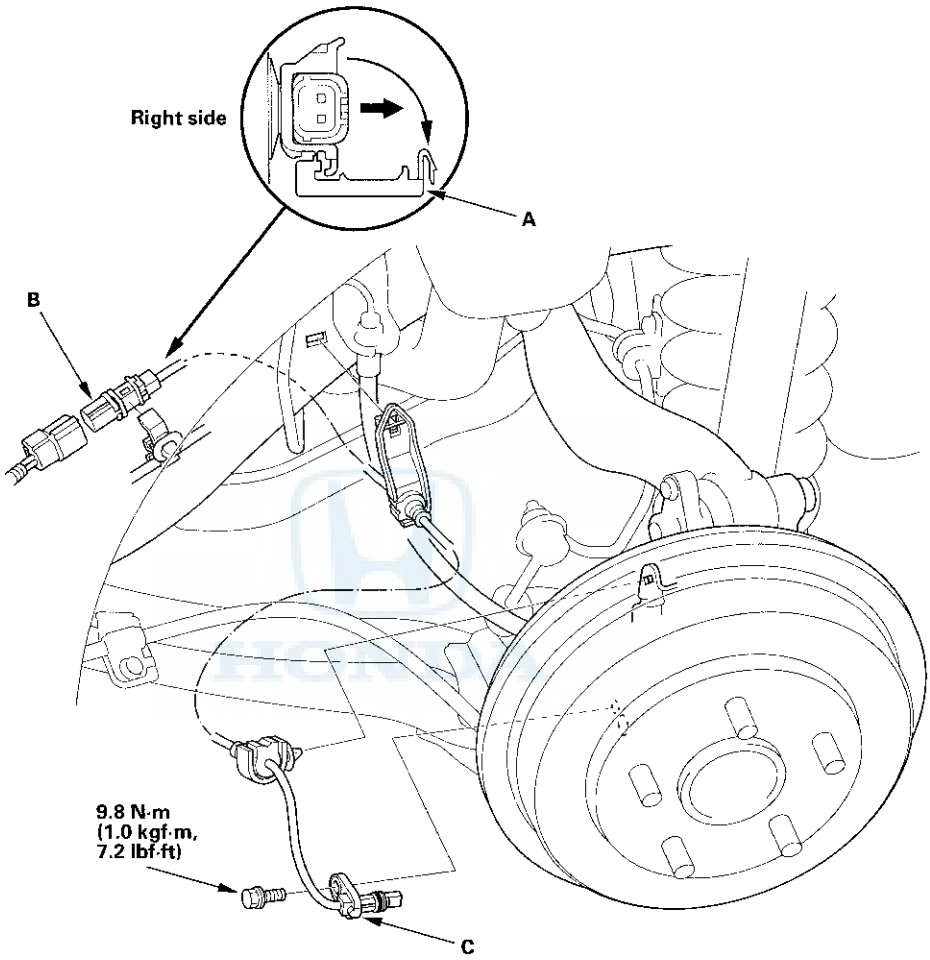

3. Remove the clips, the bolt, and the wheel speed sensor (C).

(cont'd)

Wheel Speed Sensor Replacement (cont'd)

4. Apply multi-purpose grease to the wheel speed sensor O-ring (A) and the sensor hole (B) in the knuckle.

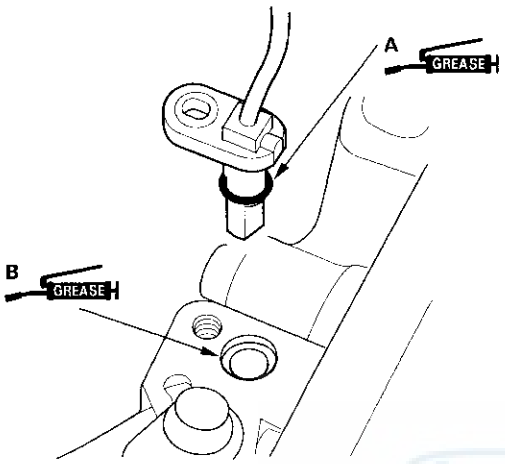

5. Insert the guide pin tool (A) into the wheel speed sensor bolt hole until the shoulder of the tool contacts the wheel speed sensor bracket.

   NOTE: To prevent O-ring damage, the wheel speed sensor must be installed with the guide pin tool.

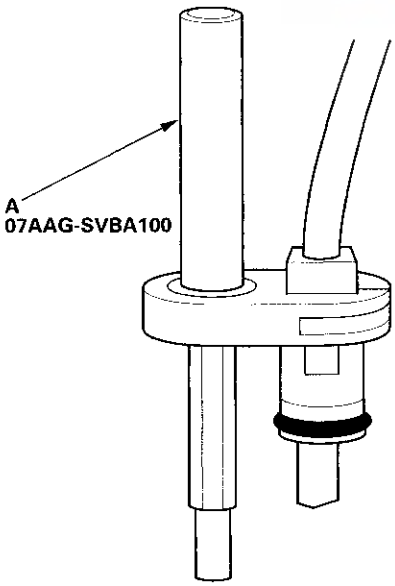

6. Insert the wheel speed sensor (A) and the guide pin tool (B) into the bolt hole on the knuckle.

   NOTE: To ensure proper alignment when pushing the wheel speed sensor into the knuckle housing, do not hold the sensor bracket during installation, hold the sensor wire.

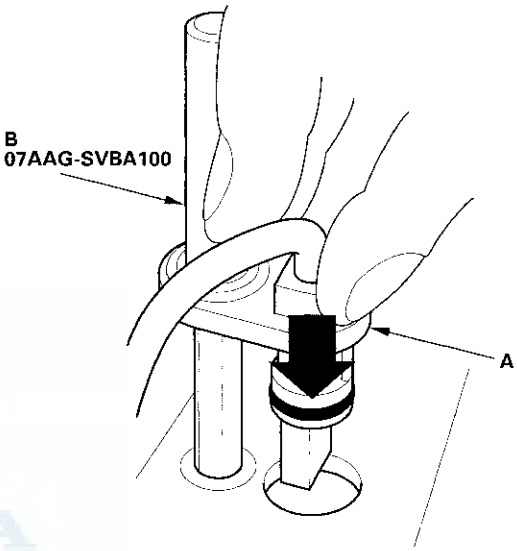

7. Gently push and pull the wheel speed sensor in and out to make sure the O-ring is sliding properly in its housing. While you are doing this, make sure the sensor doesn't come out of the knuckle assembly. If the sliding effort is too high, remove the wheel speed sensor, inspect the O-ring for damage, and start the installation process again.

8. Remove the guide pin tool, then install the bolt, and tighten it to specified torque.

9. Clean the mating surfaces between the brake drum and the inside of the wheel, then install the rear wheel.

10. Start the engine, and make sure the ABS indicator goes off.

11. Test-drive the vehicle, and make sure the ABS indicator does not come on.

Brakes

Conventional Brake Components **19-1**

Advanced Hydraulic Booster **19-43**

ABS (Anti-lock Brake System) Components ('06-08 Models) **19-111**

VSA (Vehicle Stability Assist) System Components ('09 Model)

Component Location Index 19-160
General Troubleshooting Information 19-162
DTC Troubleshooting Index 19-165
Symptom Troubleshooting Index 19-170
System Description 19-171
Circuit Diagram 19-178
DTC Troubleshooting 19-181
Symptom Troubleshooting 19-230
Steering Angle Sensor Replacement 19-233
Yaw Rate-Lateral Acceleration Sensor Replacement 19-234
VSA Sensor Neutral Position Memorization 19-234
VSA OFF Switch Test 19-235
VSA Modulator-Control Unit Removal and Installation 19-236
Wheel Speed Sensor Replacement 19-238

VSA System Components

Component Location Index

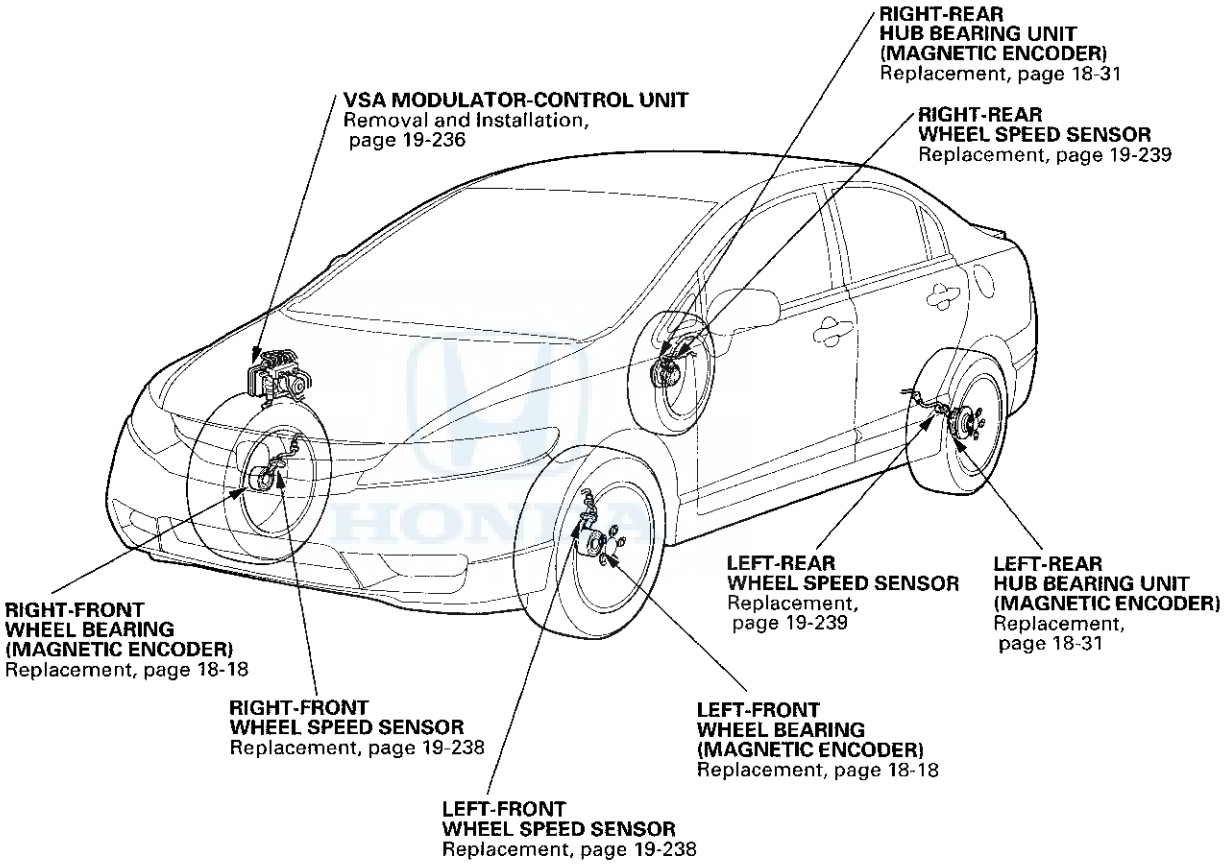

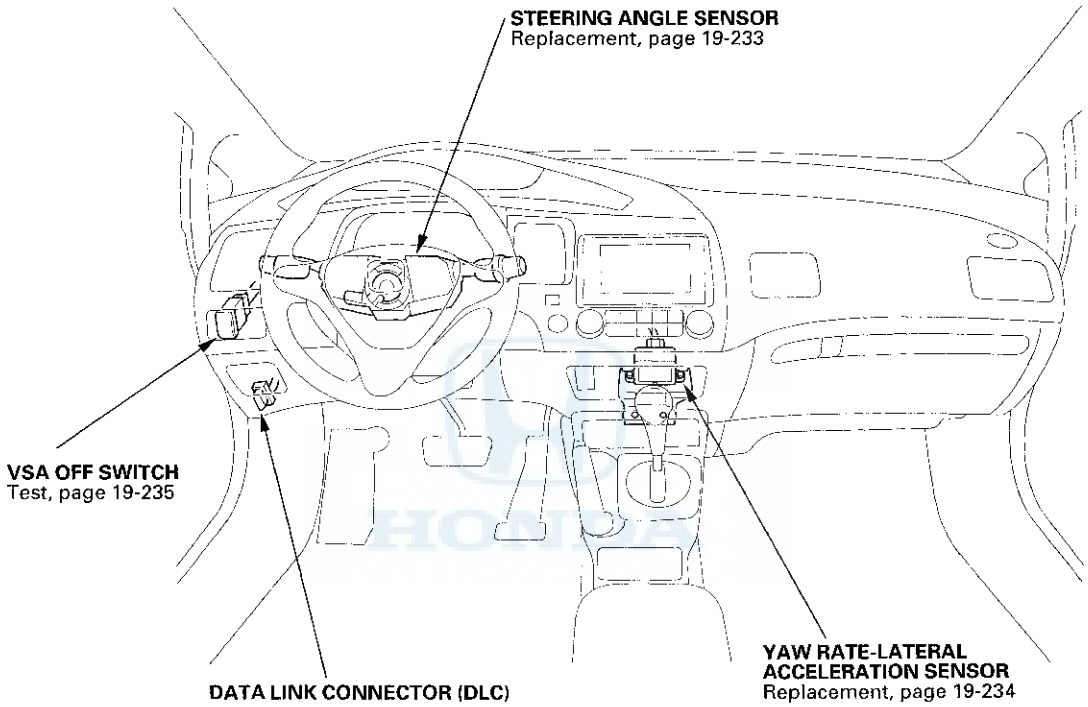
STEERING ANGLE SENSOR
Replacement, page 19-233
VSA OFF SWITCH
Test, page 19-235
DATA LINK CONNECTOR (DLC)
YAW RATE-LATERAL ACCELERATION SENSOR
Replacement, page 19-234

VSA System Components

General Troubleshooting Information

System Indicator

This system has four indicators:

- ABS indicator (A)
- Brake system indicator (B)
- VSA indicator (C)
- VSA activation indicator (D)

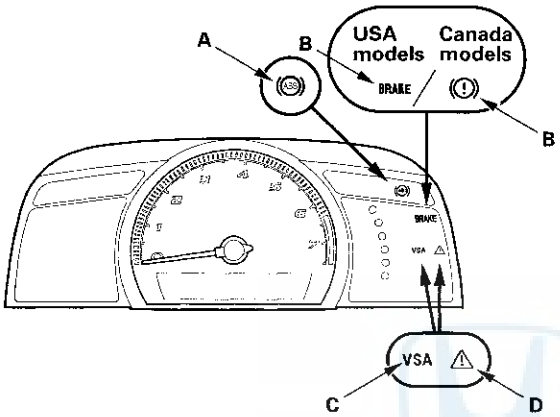

When the system is OK, each indicator comes on for about 2 seconds after turning the ignition switch to ON (II), then goes off.
When the system detects a problem, a DTC is set and, depending upon the failure, the VSA modulator-control unit determines which indicator(s) are turned on. If the problem goes away (system returns to normal), the indicator(s) are controlled in the following way depending upon the DTC that is set:

- The indicator(s) will come on and stay on when the ignition switch is ON (II).
- The indicator(s) automatically go off.
- The indicator(s) go off after the vehicle is driven.

ABS Indicator

The ABS indicator comes on when the ABS function is lost. The brakes still work like a conventional system.

Brake System Indicator

The brake system indicator comes on when the EBD function is lost, the advanced hydraulic booster function is lost, the parking brake is applied, and/or the brake fluid level is low.

NOTE: If two or more wheel speed sensors fail, the brake system indicator comes on.

VSA Indicator

The VSA indicator comes on when the VSA function is lost.

VSA Activation Indicator

The VSA activation indicator blinks when the VSA function is activating. The VSA activation indicator comes on and stays on when the VSA is turned OFF by using the VSA OFF switch, or when the VSA function is lost.

Diagnostic Trouble Code (DTC)

- The memory holds all DTCs. However, when the same DTC is detected more than once, the more recent DTC is written over the earlier one. Therefore, when the same problem is detected repeatedly, it is memorized as a single DTC.
- The DTCs are indicated in the order they occur.
- The DTCs are memorized in the EEPROM. Therefore, the memorized DTCs cannot be erased by disconnecting the battery. Do the specified procedures to clear the DTCs.

Self-diagnosis

- Self-diagnosis can be classified into two categories:
  - Initial diagnosis: Done right after the ignition switch is turned to ON (II) and until the ABS and VSA indicators go off.
  - Regular diagnosis: Done right after the initial diagnosis until the ignition switch is turned to LOCK (0).
- When the system detects a problem, the VSA modulator-control unit shifts to fail-safe mode.

Kickback

The pump motor operates when the VSA modulator-control unit is functioning, and the fluid in the reservoir is forced out to the master cylinder, causing kickback at the brake pedal.

Pump Motor

- The pump motor operates when the VSA modulator-control unit is functioning.
- The VSA modulator-control unit checks the pump motor operation one time after completing initial diagnosis during regular diagnosis when the vehicle is driven over 10 mph (15 km/h).

Brake Fluid Replacement/Air Bleeding

Brake fluid replacement and air bleeding procedures are identical to the procedures of advanced hydraulic booster (see page 19-95).

How to Troubleshoot DTCs

The troubleshooting procedures assume that the cause of the problem is still present, and the ABS and/or VSA indicator is still on. Following a troubleshooting procedure for a code that has been cleared but does not reset can result in incorrect diagnosis.

1. Question the customer about the conditions when the problem occurred, and try to reproduce the same conditions for troubleshooting. Find out when the ABS and/or VSA indicator came on, such as during activation, after activation, when the vehicle was traveling at a certain speed, etc. If necessary, have the customer demonstrate the concern.

2. When the ABS or VSA indicator does not come on during the test-drive, but troubleshooting is done based on the DTC, check for loose connectors, poor contact of the terminals, etc. in the circuit indicated by the DTC before you start troubleshooting.

3. After troubleshooting, or the repairs are done, clear the DTCs, and test-drive the vehicle under the same conditions that originally set the DTCs. Make sure the ABS and VSA indicators do not come on.

4. Check for DTCs from other systems which are connected via F-CAN. If there are DTCs that are related to F-CAN, one possible cause was that the ignition switch was turned to ON (II) with the VSA modulator-control unit connector disconnected. Clear the DTCs. Check for fuel and emissions DTC's first.

   NOTE: Always troubleshoot fuel and emissions DTC's first.

Intermittent Failures

The term "intermittent failure" means a system may have had a failure, but it checks OK now. If you cannot reproduce the condition, check for loose connectors or terminal pins related to the circuit that you are troubleshooting.

(cont'd)

General Troubleshooting Information (cont'd)

How to Use the HDS (Honda Diagnostic System)

1. If the system indicators stay on, connect the HDS to the data link connector (DLC) (A) located under the driver's side of the dashboard.

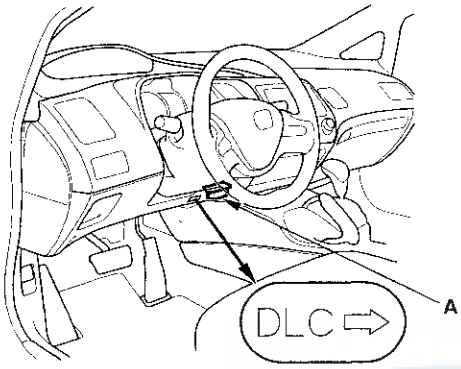

2. Turn the ignition switch to ON (II).
3. Make sure the HDS communicates with the vehicle and the VSA modulator-control unit. If it doesn't, troubleshoot the DLC circuit (see page 11-213).
4. Check the diagnostic trouble code (DTC) for all systems, troubleshoot the powertrain DTCs first and note it. Then refer to the indicated DTC's troubleshooting, and do the appropriate troubleshooting procedure.

   NOTE:
   - The HDS communication stops when the vehicle speed is at 31 mph (50 km/h) or more.
   - The HDS reads the DTC, current data, and other system data.
   - For specific operations, refer to the Help menu that came with the HDS.

How to Retrieve DTCs

1. With the ignition switch in LOCK (0), connect the HDS to the data link connector (DLC) under the driver's side of the dashboard.
2. Turn the ignition switch to ON (II).
3. Make sure the HDS communicates with the vehicle and the VSA modulator-control unit. If it doesn't troubleshoot the DLC circuit (see page 11-213).
4. Follow the prompts on the HDS to display the DTC(s) on the screen. After determining the DTC, refer to the DTC troubleshooting. Do the all systems DTC check, and troubleshoot any powertrain DTCs first.
5. Turn the ignition switch to LOCK (0).

How to Clear DTCs

1. With the ignition switch in LOCK (0), connect the HDS to the data link connector (DLC) under the driver's side of the dashboard.
2. Turn the ignition switch to ON (II).
3. Make sure the HDS communicates with the vehicle and the VSA modulator-control unit. If it doesn't troubleshoot the DLC circuit (see page 11-213).
4. Clear the DTC(s) by following the screen prompts on the HDS.
5. Turn the ignition switch to LOCK (0).

DTC Troubleshooting Index

DTC		Detection Item	ABS Indicator	Brake System Indicator	VSA Indicator	VSA Activation Indicator	Note
11	-13	Right-front Wheel Speed Sensor Circuit Malfunction	ON	ON/OFF*	ON	ON	(see page 19-181)
12	-11	Right-front Wheel Speed Sensor Electrical Noise or Intermittent Interruption	ON	ON/OFF*	ON	ON	(see page 19-184)
	-12	Right-front Wheel Speed Sensor Short to the Other Sensor Circuit	ON	ON/OFF*	ON	ON	(see page 19-185)
	-21	Right-front Wheel Speed Sensor Installation Error	ON	ON/OFF*	ON	ON	(see page 19-187)
	-22	Right-front Wheel Speed Sensor Installation Error (19 mph (30 km/h) or More)	ON	ON/OFF*	ON	ON	(see page 19-188)
	-23	Right-front Wheel Speed Sensor Installation Error (0 to 9 mph (0 to 15 km/h))	ON	ON/OFF*	ON	ON	(see page 19-188)
13	-13	Left-front Wheel Speed Sensor Circuit Malfunction	ON	ON/OFF*	ON	ON	(see page 19-181)
14	-11	Left-front Wheel Speed Sensor Electrical Noise or Intermittent Interruption	ON	ON/OFF*	ON	ON	(see page 19-184)
	-12	Left-front Wheel Speed Sensor Short to the Other Sensor Circuit	ON	ON/OFF*	ON	ON	(see page 19-185)
	-21	Left-front Wheel Speed Sensor Installation Error	ON	ON/OFF*	ON	ON	(see page 19-187)
	-22	Left-front Wheel Speed Sensor Installation Error (19 mph (30 km/h) or More)	ON	ON/OFF*	ON	ON	(see page 19-188)
	-23	Left-front Wheel Speed Sensor Installation Error (0 to 9 mph (0 to 15 km/h))	ON	ON/OFF*	ON	ON	(see page 19-188)
15	-13	Right-rear Wheel Speed Sensor Circuit Malfunction	ON	ON/OFF*	ON	ON	(see page 19-181)
16	-11	Right-rear Wheel Speed Sensor Electrical Noise or Intermittent Interruption	ON	ON/OFF*	ON	ON	(see page 19-184)
	-12	Right-rear Wheel Speed Sensor Short to the Other Sensor Circuit	ON	ON/OFF*	ON	ON	(see page 19-185)
	-21	Right-rear Wheel Speed Sensor Installation Error	ON	ON/OFF*	ON	ON	(see page 19-187)
	-22	Right-rear Wheel Speed Sensor Installation Error (19 mph (30 km/h) or More)	ON	ON/OFF*	ON	ON	(see page 19-188)
	-23	Right-rear Wheel Speed Sensor Installation Error (0 to 9 mph (0 to 15 km/h))	ON	ON/OFF*	ON	ON	(see page 19-188)
17	-13	Left-rear Wheel Speed Sensor Circuit Malfunction	ON	ON/OFF*	ON	ON	(see page 19-181)
18	-11	Left-rear Wheel Speed Sensor Electrical Noise or Intermittent Interruption	ON	ON/OFF*	ON	ON	(see page 19-184)
	-12	Left-rear Wheel Speed Sensor Short to the Other Sensor Circuit	ON	ON/OFF*	ON	ON	(see page 19-185)
	-21	Left-rear Wheel Speed Sensor Installation Error	ON	ON/OFF*	ON	ON	(see page 19-187)
	-22	Left-rear Wheel Speed Sensor Installation Error (19 mph (30 km/h) or More)	ON	ON/OFF*	ON	ON	(see page 19-188)
	-23	Left-rear Wheel Speed Sensor Installation Error (0 to 9 mph (0 to 15 km/h))	ON	ON/OFF*	ON	ON	(see page 19-188)
21	-11	Right-front Magnetic Encoder (Wheel Bearing) Malfunction (Pulse Missing)	ON	ON/OFF*	ON	ON	(see page 19-189)
22	-11	Left-front Magnetic Encoder (Wheel Bearing) Malfunction (Pulse Missing)	ON	ON/OFF*	ON	ON	(see page 19-189)
23	-11	Right-rear Magnetic Encoder (Wheel Bearing) Malfunction (Pulse Missing)	ON	ON/OFF*	ON	ON	(see page 19-189)
24	-11	Left-rear Magnetic Encoder (Wheel Bearing) Malfunction (Pulse Missing)	ON	ON/OFF*	ON	ON	(see page 19-189)
25	-12	Yaw Rate Sensor Internal Circuit Malfunction (Open, Short)	OFF	OFF	ON	ON	(see page 19-190)
	-13	Yaw Rate Sensor Communication Error	OFF	OFF	ON	ON	(see page 19-190)
	-17	Yaw Rate/Lateral Acceleration Sensor Power Source Voltage Malfunction	OFF	OFF	ON	ON	(see page 19-190)
	-18	Yaw Rate/Lateral Acceleration Sensor Internal Circuit Malfunction	OFF	OFF	ON	ON	(see page 19-190)
	-19	Yaw Rate/Lateral Acceleration Sensor Startup Time Malfunction	OFF	OFF	ON	ON	(see page 19-191)
	-21	Yaw Rate Sensor Neutral Position Malfunction	OFF	OFF	ON	ON	(see page 19-190)
	-22	Yaw Rate Sensor Stuck	OFF	OFF	ON	ON	(see page 19-191)
	-23	Yaw Rate Sensor Circuit Intermittent Interruption	OFF	OFF	ON	ON	(see page 19-191)
	-24	Yaw Rate Sensor Gain Low	OFF	OFF	ON	ON	(see page 19-192)
	-25	Yaw Rate Sensor Gain High	OFF	OFF	ON	ON	(see page 19-192)

*: Brake system indicator turns ON when two or more wheels fail.

(cont'd)

DTC Troubleshooting Index (cont'd)

DTC		Detection Item	ABS Indicator	Brake System Indicator	VSA Indicator	VSA Activation Indicator	Note
26	-12	Lateral Acceleration Sensor Internal Circuit Malfunction (Open, Short)	OFF	OFF	ON	ON	(see page 19-190)
	-13	Lateral Acceleration Sensor Communication Error	OFF	OFF	ON	ON	(see page 19-190)
	-21	Lateral Acceleration Sensor Neutral Position Malfunction	OFF	OFF	ON	ON	(see page 19-192)
	-22	Lateral Acceleration Sensor Stuck	OFF	OFF	ON	ON	(see page 19-193)
	-23	Lateral Acceleration Sensor Circuit Intermittent Interruption	OFF	OFF	ON	ON	(see page 19-192)
	-24	Lateral Acceleration Sensor Gain Low	OFF	OFF	ON	ON	(see page 19-192)
	-25	Lateral Acceleration Sensor Gain High	OFF	OFF	ON	ON	(see page 19-192)
27	-11	Steering Angle Sensor DIAG Signal Error (Initial)	OFF	OFF	ON	ON	(see page 19-194)
	-21	Steering Angle Sensor Stuck Neutral Position	OFF	OFF	ON	ON	(see page 19-196)
	-22	Steering Angle Sensor Stuck Offset Position	OFF	OFF	ON	ON	(see page 19-196)
	-23	Steering Angle Sensor Counter Malfunction	OFF	OFF	ON	ON	(see page 19-199)
	-24	Steering Angle Sensor Exchange Malfunction	OFF	OFF	ON	ON	(see page 19-199)
	-26	Steering Angle Sensor DIAG Signal Error (main)	OFF	OFF	ON	ON	(see page 19-194)
31	-01	ABS Right-front Inlet Solenoid Valve Malfunction (Solenoid Initial Pulse)	ON	ON	ON	ON	(see page 19-200)
	-21	ABS Right-front Inlet Solenoid Valve Malfunction (Solenoid Pulse)	ON	ON	ON	ON	(see page 19-200)
	-22	ABS Right-front Inlet Solenoid Valve Malfunction (Solenoid Speculative)	ON	ON	ON	ON	(see page 19-200)
	-23	ABS Right-front Inlet Solenoid Valve Malfunction (Solenoid Stuck ON)	ON	ON	ON	ON	(see page 19-200)
32	-01	ABS Right-front Outlet Solenoid Valve Malfunction (Solenoid Initial Pulse)	ON	ON	ON	ON	(see page 19-200)
	-21	ABS Right-front Outlet Solenoid Valve Malfunction (Solenoid Pulse)	ON	ON	ON	ON	(see page 19-200)
	-22	ABS Right-front Outlet Solenoid Valve Malfunction (Solenoid Speculative)	ON	ON	ON	ON	(see page 19-200)
	-23	ABS Right-front Outlet Solenoid Valve Malfunction (Solenoid Stuck ON)	ON	ON	ON	ON	(see page 19-200)
33	-01	ABS Left-front Inlet Solenoid Valve Malfunction (Solenoid Initial Pulse)	ON	ON	ON	ON	(see page 19-200)
	-21	ABS Left-front Inlet Solenoid Valve Malfunction (Solenoid Pulse)	ON	ON	ON	ON	(see page 19-200)
	-22	ABS Left-front Inlet Solenoid Valve Malfunction (Solenoid Speculative)	ON	ON	ON	ON	(see page 19-200)
	-23	ABS Left-front Inlet Solenoid Valve Malfunction (Solenoid Stuck ON)	ON	ON	ON	ON	(see page 19-200)
34	-01	ABS Left-front Outlet Solenoid Valve Malfunction (Solenoid Initial Pulse)	ON	ON	ON	ON	(see page 19-200)
	-21	ABS Left-front Outlet Solenoid Valve Malfunction (Solenoid Pulse)	ON	ON	ON	ON	(see page 19-200)
	-22	ABS Left-front Outlet Solenoid Valve Malfunction (Solenoid Speculative)	ON	ON	ON	ON	(see page 19-200)
	-23	ABS Left-front Outlet Solenoid Valve Malfunction (Solenoid Stuck ON)	ON	ON	ON	ON	(see page 19-200)
35	-01	ABS Right-rear Inlet Solenoid Valve Malfunction (Solenoid Initial Pulse)	ON	ON	ON	ON	(see page 19-200)
	-21	ABS Right-rear Inlet Solenoid Valve Malfunction (Solenoid Pulse)	ON	ON	ON	ON	(see page 19-200)
	-22	ABS Right-rear Inlet Solenoid Valve Malfunction (Solenoid Speculative)	ON	ON	ON	ON	(see page 19-200)
	-23	ABS Right-rear Inlet Solenoid Valve Malfunction (Solenoid Stuck ON)	ON	ON	ON	ON	(see page 19-200)

DTC		Detection Item	ABS Indicator	Brake System Indicator	VSA Indicator	VSA Activation Indicator	Note
36	-01	ABS Right-rear Outlet Solenoid Valve Malfunction (Solenoid Initial Pulse)	ON	ON	ON	ON	(see page 19-200)
	-21	ABS Right-rear Outlet Solenoid Valve Malfunction (Solenoid Pulse)	ON	ON	ON	ON	(see page 19-200)
	-22	ABS Right-rear Outlet Solenoid Valve Malfunction (Solenoid Speculative)	ON	ON	ON	ON	(see page 19-200)
	-23	ABS Right-rear Outlet Solenoid Valve Malfunction (Solenoid Stuck ON)	ON	ON	ON	ON	(see page 19-200)
37	-01	ABS Left-rear Inlet Solenoid Valve Malfunction (Solenoid Initial Pulse)	ON	ON	ON	ON	(see page 19-200)
	-21	ABS Left-rear Inlet Solenoid Valve Malfunction (Solenoid Pulse)	ON	ON	ON	ON	(see page 19-200)
	-22	ABS Left-rear Inlet Solenoid Valve Malfunction (Solenoid Speculative)	ON	ON	ON	ON	(see page 19-200)
	-23	ABS Left-rear Inlet Solenoid Valve Malfunction (Solenoid Stuck ON)	ON	ON	ON	ON	(see page 19-200)
38	-01	ABS Left-rear Outlet Solenoid Valve Malfunction (Solenoid Initial Pulse)	ON	ON	ON	ON	(see page 19-200)
	-21	ABS Left-Rear Outlet Solenoid Valve Malfunction (Solenoid Pulse)	ON	ON	ON	ON	(see page 19-200)
	-22	ABS Left-rear Outlet Solenoid Valve Malfunction (Solenoid Speculative)	ON	ON	ON	ON	(see page 19-200)
	-23	ABS Left-rear Outlet Solenoid Valve Malfunction (Solenoid Stuck ON)	ON	ON	ON	ON	(see page 19-200)
41	-21	Right-front Wheel Lock	ON	ON/OFF*	ON	ON	(see page 19-201)
42	-21	Left-front Wheel Lock	ON	ON/OFF*	ON	ON	(see page 19-201)
43	-21	Right-rear Wheel Lock	ON	ON/OFF*	ON	ON	(see page 19-201)
44	-21	Left-rear Wheel Lock	ON	ON/OFF*	ON	ON	(see page 19-201)
51	-11	Motor Lock	ON	OFF	ON	ON	(see page 19-202)
	-12	Motor Lock Circuit Malfunction	ON	OFF	ON	ON	(see page 19-202)
	-13	Motor Relay OFF Malfunction	ON	OFF	ON	ON	(see page 19-202)
52	-12	Motor Stuck OFF	ON	OFF	ON	ON	(see page 19-204)
53	-01	Motor Relay Stuck ON 1	ON	OFF	ON	ON	(see page 19-205)
	-12	Motor Relay Stuck ON 2	ON	OFF	ON	ON	(see page 19-205)
54	-03	Fail-safe Relay 1 Stuck ON	ON	ON	ON	ON	(see page 19-206)
	-04	Fail-safe Relay 1 Stuck OFF (Initial)	ON	ON	ON	ON	(see page 19-206)
	-21	Fail-safe Relay 1 Stuck OFF (Main)	ON	ON	ON	ON	(see page 19-206)
56	-01	Initial VIG FET Stuck OFF	ON	ON	ON	ON	(see page 19-206)
	-02	Initial VIG FET Stuck ON	ON	ON	ON	ON	(see page 19-206)
	-11	VIG FET Stuck OFF	ON	ON	ON	ON	(see page 19-206)
61	-01	VSA Modulator-control Unit Initial IG low Voltage	ON	ON	ON	ON	(see page 19-207)
	-21	VSA Modulator-control Unit Power Source Low Voltage 1	ON	ON	ON	ON	(see page 19-207)
	-22	VSA Modulator-control Unit Power Source Low Voltage 2	ON	OFF	ON	ON	(see page 19-207)
	-23	VSA Modulator-control Unit Power Source Low Voltage 3	ON	ON	ON	ON	(see page 19-207)
62	-21	VSA Modulator-control Unit IG High Voltage	ON	ON	ON	ON	(see page 19-208)
64	-11	Steering Angle Sensor Power Circuit Short	OFF	OFF	ON	ON	(see page 19-208)
	-12	Steering Angle Sensor Power Circuit Open	OFF	OFF	ON	ON	(see page 19-209)
65	-21	Brake Fluid Level Stuck ON	OFF	OFF	ON	ON	(see page 19-211)
66	-11	Pressure Sensor (Inside of VSA Modulator-control Unit) Malfunction	OFF	OFF	ON	ON	(see page 19-212)
	-12	Pressure Sensor (Inside of VSA Modulator-control Unit) Malfunction	OFF	OFF	ON	ON	(see page 19-212)
	-13	Pressure Sensor (Inside of VSA Modulator-control Unit) Malfunction	OFF	OFF	ON	ON	(see page 19-212)
	-14	Pressure Sensor (Inside of VSA Modulator-control Unit) Malfunction	OFF	OFF	ON	ON	(see page 19-212)
	-15	Pressure Sensor (Inside of VSA Modulator-control Unit) Malfunction	OFF	OFF	ON	ON	(see page 19-213)
	-16	Pressure Sensor (Inside of VSA Modulator-control Unit) Malfunction	OFF	OFF	ON	ON	(see page 19-212)
68	-21	Brake Pedal Position Switch Stuck OFF	OFF	OFF	ON	ON	(see page 19-213)
	-22	Brake Pedal Position Switch Stuck ON	OFF	OFF	ON	ON	(see page 19-215)

* : Brake system indicator turns ON when two or more wheels fail.

(cont'd)

DTC Troubleshooting Index (cont'd)

DTC		Detection Item	ABS Indicator	Brake System Indicator	VSA Indicator	VSA Activation Indicator	Note
71	-21	Right-front or Left-rear Different Diameter Tire Malfunction	ON	ON	ON	ON	(see page 19-216)
	-22	Left-front or Right-rear Different Diameter Tire Malfunction	ON	ON	ON	ON	(see page 19-216)
	-23	Right-front and Right-rear Different Diameter Tire Malfunction	ON	ON	ON	ON	(see page 19-216)
	-24	Left-front and Left-rear Different Diameter Tire Malfunction	ON	ON	ON	ON	(see page 19-216)
	-25	Right-front and Left-front Different Diameter Tire Malfunction	ON	ON	ON	ON	(see page 19-216)
	-26	Right-rear and Left-rear Different Diameter Tire Malfunction	ON	ON	ON	ON	(see page 19-216)
	-27	Right-front or Left-rear Different Diameter Tire Malfunction	OFF	OFF	ON	ON	(see page 19-216)
	-28	Left-front or Right-rear Different Diameter Tire Malfunction	OFF	OFF	ON	ON	(see page 19-216)
	-29	Right-front and Right-rear Different Diameter Tire Malfunction	OFF	OFF	ON	ON	(see page 19-216)
	-2A	Left-front and Left-rear Different Diameter Tire Malfunction	OFF	OFF	ON	ON	(see page 19-216)
	-2B	Right-front and Left-front Different Diameter Tire Malfunction	OFF	OFF	ON	ON	(see page 19-216)
	-2C	Right-rear and Left-rear Different Diameter Tire Malfunction	OFF	OFF	ON	ON	(see page 19-216)
81	-01	Central Processing Unit (CPU) Internal Circuit Malfunction	ON	ON	ON	ON	(see page 19-217)
	-02	Central Processing Unit (CPU) Internal Circuit Malfunction	ON	ON	ON	ON	(see page 19-217)
	-03	Central Processing Unit (CPU) Internal Circuit Malfunction	ON	ON	ON	ON	(see page 19-217)
	-05	Central Processing Unit (CPU) Internal Circuit Malfunction	ON	ON	ON	ON	(see page 19-217)
	-06	Central Processing Unit (CPU) Internal Circuit Malfunction	ON	ON	ON	ON	(see page 19-217)
	-07	Central Processing Unit (CPU) Internal Circuit Malfunction	ON	ON	ON	ON	(see page 19-217)
	-08	Central Processing Unit (CPU) Internal Circuit Malfunction	ON	ON	ON	ON	(see page 19-217)
	-11	Central Processing Unit (CPU) Internal Circuit Malfunction	ON	ON	ON	ON	(see page 19-217)
	-12	Central Processing Unit (CPU) Internal Circuit Malfunction	ON	ON	ON	ON	(see page 19-217)
	-13	Central Processing Unit (CPU) Internal Circuit Malfunction	ON	ON	ON	ON	(see page 19-217)
	-14	Central Processing Unit (CPU) Internal Circuit Malfunction	ON	ON	ON	ON	(see page 19-217)
	-21	Central Processing Unit (CPU) Internal Circuit Malfunction	ON	ON	ON	ON	(see page 19-217)
	-22	Central Processing Unit (CPU) Internal Circuit Malfunction	ON	ON	ON	ON	(see page 19-217)
	-23	Central Processing Unit (CPU) Internal Circuit Malfunction	ON	ON	ON	ON	(see page 19-217)
	-31	Central Processing Unit (CPU) Internal Circuit Malfunction	ON	ON	ON	ON	(see page 19-217)
	-32	Central Processing Unit (CPU) Internal Circuit Malfunction	ON	ON	ON	ON	(see page 19-217)
	-33	Central Processing Unit (CPU) Internal Circuit Malfunction	ON	ON	ON	ON	(see page 19-217)
	-35	Central Processing Unit (CPU) Internal Circuit Malfunction	ON	ON	ON	ON	(see page 19-217)
	-36	Central Processing Unit (CPU) Internal Circuit Malfunction	ON	ON	ON	ON	(see page 19-217)
	-37	Central Processing Unit (CPU) Internal Circuit Malfunction	ON	ON	ON	ON	(see page 19-217)
	-38	Central Processing Unit (CPU) Internal Circuit Malfunction	ON	ON	ON	ON	(see page 19-217)
	-39	Central Processing Unit (CPU) Internal Circuit Malfunction	ON	ON	ON	ON	(see page 19-217)
	-3A	Central Processing Unit (CPU) Internal Circuit Malfunction	ON	ON	ON	ON	(see page 19-217)
	-3C	Central Processing Unit (CPU) Internal Circuit Malfunction	ON	ON	ON	ON	(see page 19-217)
	-3D	Central Processing Unit (CPU) Internal Circuit Malfunction	ON	ON	ON	ON	(see page 19-219)
	-3E	Central Processing Unit (CPU) Internal Circuit Malfunction	ON	ON	ON	ON	(see page 19-219)
	-40	Central Processing Unit (CPU) Internal Circuit Malfunction	ON	ON	ON	ON	(see page 19-217)
	-41	Central Processing Unit (CPU) Internal Circuit Malfunction	ON	ON	ON	ON	(see page 19-217)
	-42	Central Processing Unit (CPU) Internal Circuit Malfunction	ON	ON	ON	ON	(see page 19-217)
	-51	Central Processing Unit (CPU) Internal Circuit Malfunction	ON	ON	ON	ON	(see page 19-218)
	-52	Central Processing Unit (CPU) Internal Circuit Malfunction	ON	ON	ON	ON	(see page 19-217)
	-53	Central Processing Unit (CPU) Internal Circuit Malfunction	ON	ON	ON	ON	(see page 19-218)
	-54	Central Processing Unit (CPU) Internal Circuit Malfunction	ON	ON	ON	ON	(see page 19-217)
	-55	Central Processing Unit (CPU) Internal Circuit Malfunction	ON	ON	ON	ON	(see page 19-218)
	-56	Central Processing Unit (CPU) Internal Circuit Malfunction	ON	ON	ON	ON	(see page 19-217)
	-57	Central Processing Unit (CPU) Internal Circuit Malfunction	ON	ON	ON	ON	(see page 19-218)
	-58	Central Processing Unit (CPU) Internal Circuit Malfunction	ON	ON	ON	ON	(see page 19-217)
	-59	Central Processing Unit (CPU) Internal Circuit Malfunction	ON	ON	ON	ON	(see page 19-219)
	-61	Central Processing Unit (CPU) Internal Circuit Malfunction	ON	ON	ON	ON	(see page 19-217)
	-71	Central Processing Unit (CPU) Internal Circuit Malfunction	ON	OFF	ON	ON	(see page 19-217)
	-80	Central Processing Unit (CPU) Internal Circuit Malfunction	ON	ON	ON	ON	(see page 19-217)

DTC		Detection Item	ABS Indicator	Brake System Indicator	VSA Indicator	VSA Activation Indicator	Note
83	-13	PCM Communication Error	OFF	OFF	ON	ON	(see page 19-219)
	-14	PCM Communication Error	OFF	OFF	ON	ON	(see page 19-219)
84	-21	VSA Sensor Neutral Position not Writing	OFF	OFF	ON	ON	(see page 19-220)
86	-01	F-CAN Bus-off Malfunction	OFF	OFF	ON	ON	(see page 19-220)
	-11	F-CAN Communication with PCM Malfunction	OFF	OFF	ON	ON	(see page 19-221)
	-21	F-CAN Communication with Engine Malfunction	OFF	OFF	ON	ON	(see page 19-221)
	-22	F-CAN Communication with Engine Malfunction	OFF	OFF	ON	ON	(see page 19-221)
	-23	F-CAN Communication with Engine Malfunction	OFF	OFF	ON	ON	(see page 19-221)
	-24	F-CAN Communication with Engine Malfunction	OFF	OFF	ON	ON	(see page 19-221)
	-25	F-CAN Communication with Engine Malfunction	OFF	OFF	ON	ON	(see page 19-221)
	-31	F-CAN Communication with Gauge Control Module Malfunction	OFF	OFF	ON	ON	(see page 19-223)
	-41	F-CAN Communication with CVT Malfunction	OFF	OFF	ON	ON	(see page 19-221)
	-71	F-CAN Communication with Yaw Rate-Lateral Acceleration Sensor Malfunction	OFF	OFF	ON	ON	(see page 19-224)
	-81	F-CAN Communication with AHB Malfunction	OFF	OFF	ON	ON	(see page 19-226)
107	-22	Central Processing Unit (CPU) Internal Circuit Malfunction	OFF	OFF	OFF	ON	(see page 19-227)
108	-21	Steering Angle Sensor Malfunction	OFF	OFF	OFF	ON	(see page 19-227)
112	-01	Central Processing Unit (CPU) Internal Circuit Malfunction	ON	ON	ON	ON	(see page 19-228)
121	-01	VSA Solenoid Valve Malfunction	ON	ON	ON	ON	(see page 19-229)
	-02	VSA Solenoid Valve Malfunction	ON	ON	ON	ON	(see page 19-229)
	-11	VSA Solenoid Valve Malfunction	ON	ON	ON	ON	(see page 19-229)
	-21	VSA Solenoid Valve Malfunction	ON	ON	ON	ON	(see page 19-229)
	-24	VSA Solenoid Valve Malfunction	ON	ON	ON	ON	(see page 19-229)
122	-01	VSA Solenoid Valve Malfunction	ON	ON	ON	ON	(see page 19-229)
	-21	VSA Solenoid Valve Malfunction	ON	ON	ON	ON	(see page 19-229)
	-22	VSA Solenoid Valve Malfunction	ON	ON	ON	ON	(see page 19-229)
	-23	VSA Solenoid Valve Malfunction	ON	ON	ON	ON	(see page 19-229)
123	-01	VSA Solenoid Valve Malfunction	ON	ON	ON	ON	(see page 19-229)
	-02	VSA Solenoid Valve Malfunction	ON	ON	ON	ON	(see page 19-229)
	-11	VSA Solenoid Valve Malfunction	ON	ON	ON	ON	(see page 19-229)
	-21	VSA Solenoid Valve Malfunction	ON	ON	ON	ON	(see page 19-229)
	-24	VSA Solenoid Valve Malfunction	ON	ON	ON	ON	(see page 19-229)
124	-01	VSA Solenoid Valve Malfunction	ON	ON	ON	ON	(see page 19-229)
	-21	VSA Solenoid Valve Malfunction	ON	ON	ON	ON	(see page 19-229)
	-22	VSA Solenoid Valve Malfunction	ON	ON	ON	ON	(see page 19-229)
	-23	VSA Solenoid Valve Malfunction	ON	ON	ON	ON	(see page 19-229)

VSA System Components

Symptom Troubleshooting Index

When the vehicle has one of these symptoms, check for VSA diagnostic trouble codes (DTCs) with the HDS. If there are no DTCs, do the diagnostic procedure for the symptom, in the sequence listed, until you find the cause.

Symptom	Diagnostic procedure
HDS does not communicate with the VSA modulator-control unit or the vehicle	Troubleshoot the DLC circuit (see page 11-213).
VSA activation indicator does not come on at start-up (bulb check)	1. Do the gauge control module troubleshooting (see page 22-223). 2. Substitute a known-good VSA modulator-control unit, then recheck. If it is OK, replace the original VSA modulator-control unit (see page 19-236).
VSA activation indicator does not go off, and no DTCs are stored	1. Symptom Troubleshooting (see page 19-230). 2. Substitute a known-good VSA modulator-control unit, then recheck. If it is OK, replace the original VSA modulator-control unit (see page 19-236).
ABS indicator, brake system indicator, and VSA indicator do not come on	1. Do the gauge control module troubleshooting (see page 22-223). 2. Substitute a known-good VSA modulator-control unit, then recheck. If it is OK, replace the original VSA modulator-control unit (see page 19-236).
ABS indicator, brake system indicator, and VSA indicator do not go off	1. Check for F-CAN DTCs, and troubleshoot and repair those first. 2. Do the gauge control module troubleshooting (see page 22-223). 3. Symptom Troubleshooting (see page 19-231).

HONDA

System Description

VSA Modulator-control Unit Inputs and Outputs for 37P Connector (Connector Disconnected)

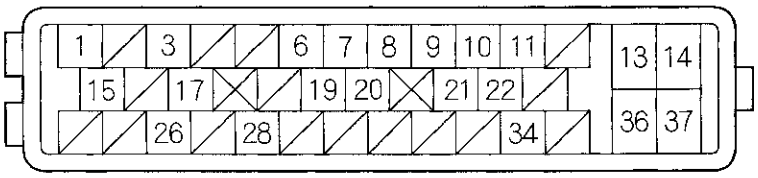

Wire side of female terminals

Terminal number	Wire color	Terminal sign	Description	Signal
1	RED	CAN-L	F-CAN communication circuit	——
3	BLU	STR-D	Detects steering angle sensor signal	
6	PNK	FR-GND	Detects right-front wheel speed sensor signal	
7	ORN	SVCC	Power source for the steering angle sensor	With ignition switch ON (II): about 5.0 V
8	PUR	RL-GND	Detects left-rear wheel speed sensor signal	——
9	LT GRN	RR +B	Detects right-rear wheel speed sensor signal	
10	BRN	SGND	Ground for the steering angle sensor	
11	RED	FL-GND	Detects left-front wheel speed sensor signal	
13	WHT	FSR +B	Power source for the fail-safe relay	Battery voltage (about 12 V) at all times
14	RED	MR +B	Power source for the motor relay	Battery voltage (about 12 V) at all times

(cont'd)

System Description (cont'd)

Terminal number	Wire color	Terminal sign	Description	Signal
15	WHT	CAN-H	F-CAN communication circuit	———
17	PUR	STR-B	Detects steering angle sensor signal	
19	GRN	FR +B	Detects right-front wheel speed sensor signal	
20	YEL	RL +B	Detects left-rear wheel speed sensor signal	
21	BLU	RR-GND	Detects right-rear wheel speed sensor signal	
22	WHT	FL +B	Detects left-front wheel speed sensor signal	
26	LT BLU	K-LINE	Communication with HDS	
28	GRY	IG1	Power source for activating the system	With ignition switch ON (II): battery voltage (about 12 V)
34	GRN	STR-A	Detects steering angle sensor signal	———
36	BLK	GND	Ground for the VSA modulator-control unit	Continuity to ground
37	BLK	MR-GND	Ground for the pump motor	Continuity to ground

HONDA

System Outline

This system is composed of the VSA modulator-control unit, the wheel speed sensors, the steering angle sensor, the yaw rate-lateral acceleration sensor, and the system indicators in the gauge control module (tach). The VSA modulator-control unit controls the ABS, EBD, TCS, and VSA, with the brake pressure of each wheel and reduces engine torque.

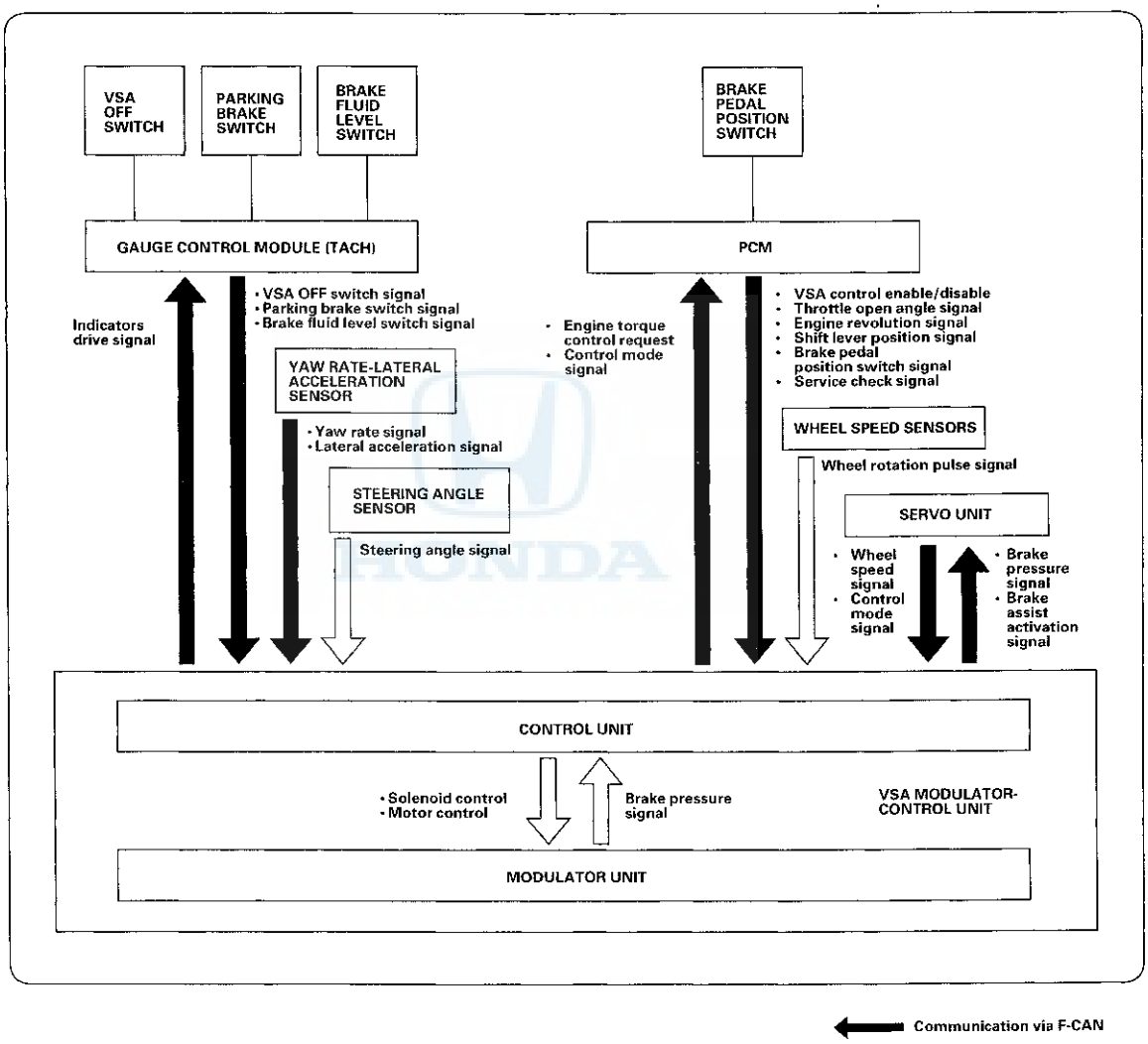

(cont'd)

System Description (cont'd)

ABS Features

Anti-lock control
Without ABS, when the brake pedal is pressed while driving, the wheels sometimes lock before the vehicle comes to a stop. In such an event, the maneuverability of the vehicle is reduced if the front wheels are locked, and the stability of the vehicle is reduced if the rear wheels are locked, creating an extremely unstable condition. With ABS, the system precisely controls the slip rate of the wheels to ensure maximum grip force from the tires, and it thereby ensures maneuverability and stability of the vehicle. The ABS calculates the slip rate of the wheels based on the four wheel speeds, and then it controls the brake fluid pressure to reach the target slip rate.

Grip force of tire and road surface

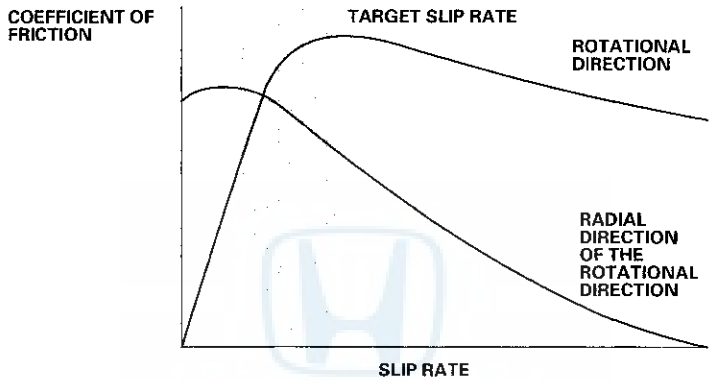

Main Control
The control unit detects the wheel speed based on the wheel speed sensor signals it receives, then it calculates the vehicle speed based on the detected wheel speed. The control unit detects the vehicle speed during deceleration based on the wheel speeds.

The control unit calculates the slip rate of each wheel, and transmits the control signal to the modulator unit solenoid valve when the slip rate is high.

The hydraulic control has three modes: Pressure intensifying, pressure reducing, and pressure retaining.

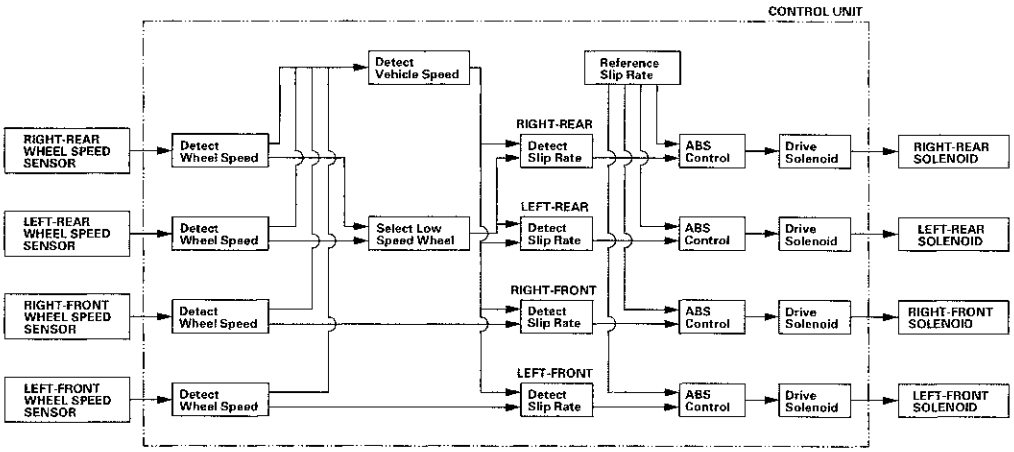

EBD Features

The electronic brake distribution (EBD) feature helps control vehicle braking by adjusting the rear brake force in accordance with the rear wheel load before the ABS operates. Based on the wheel speed sensor signals, the control unit uses the modulator to control the rear brakes individually. When the rear wheel speed is less than the front wheel speed, the VSA modulator-control unit retains the current rear brake fluid pressure by closing the inlet valve in the modulator. As the rear wheel speed increases, and approaches the front wheel speed, the VSA modulator-control unit increases the rear brake fluid pressure by momentarily opening the inlet valve. This whole process is repeated very rapidly. While this is happening, kickback may be felt at the brake pedal.

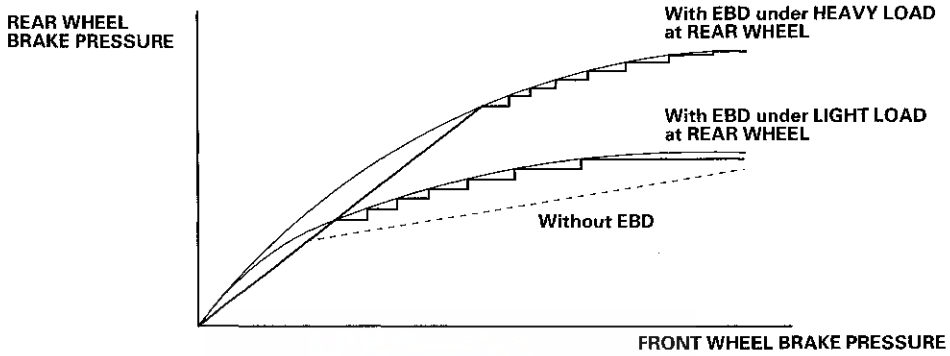

TCS Features

When a drive wheel loses traction on a slippery road surface and starts to spin, the VSA modulator-control unit applies brake pressure to the spinning wheel, and sends an engine torque control request to the PCM to slow the spinning wheel and keep traction.

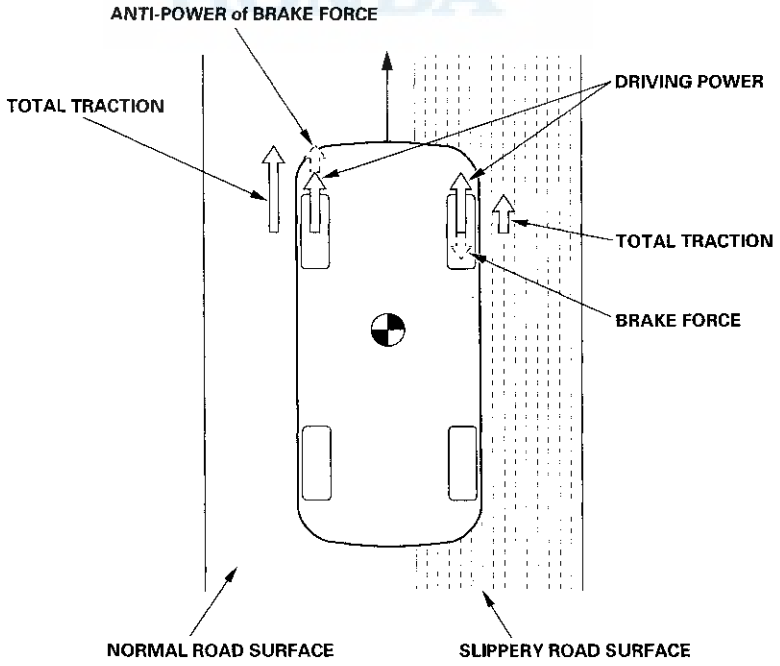

(cont'd)

System Description (cont'd)

VSA System Features

Oversteer control
Applies the brake to the front and rear outside wheels

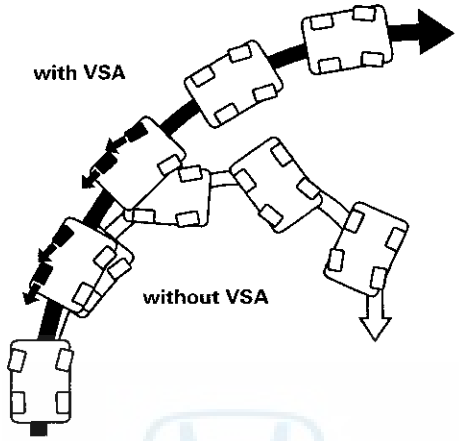

The brake makes the yaw rate opposite to the turning direction

Understeer control
- Applies the brake to the rear inside wheel
- Controls the engine torque when accelerating

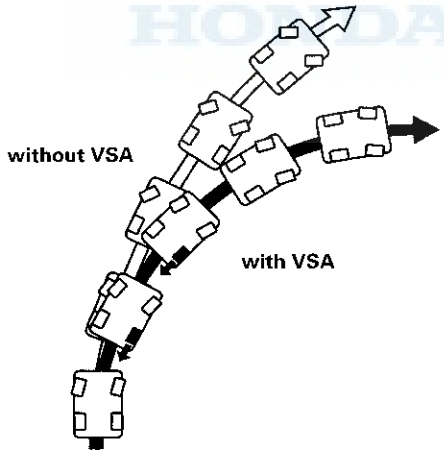

The brake increases the yaw rate toward the turning direction

The throttle control effect;
- **reduces vehicle speed**
- **increases cornering force**

Modulator Unit

The modulator unit consists of the inlet solenoid valve, the outlet solenoid valve, the VSA NO (normally open) solenoid valve, the VSA NC (normally closed) solenoid valve, the reservoir, the pump, the pump motor, and the damping chamber.
The hydraulic control has three modes at ABS action; pressure intensifying, pressure retaining, and pressure reducing. Pressure adding mode is combined the TCS and VSA action.
The hydraulic circuit is an independent four channel type; one channel for each wheel.

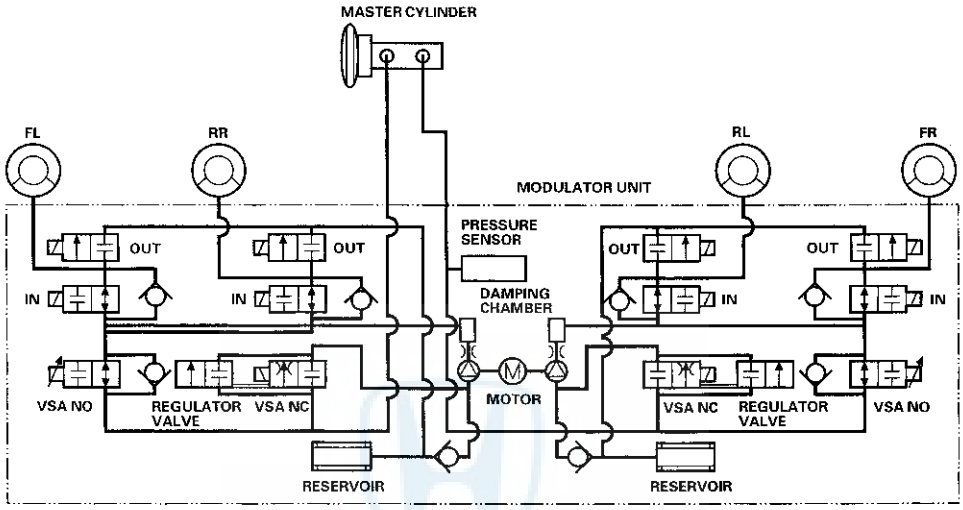

Mode	VSA NO Valve	VSA NC Valve	Inlet Solenoid Valve	Outlet Solenoid Valve	Brake Fluid
Pressure intensifying mode	open	closed	open	closed	Master cylinder fluid is pumped out to the caliper.
Pressure retaining mode	open	closed	closed	closed	Caliper fluid is retained by the inlet and outlet valves.
Pressure reducing mode	open	closed	closed	open	• Caliper fluid flows through the outlet valve to the reservoir. • The motor pumps the reservoir fluid through the damping chamber to the master cylinder*.
Pressure adding mode	closed	open	open	closed	• Master cylinder fluid is pumped out by pump with motor through VSA NC valve to the caliper. • Caliper fluid pressure exceeds master cylinder pressure.

*: The motor will keep running until the operation of the one anti-lock brake control is finished with the first pressure reducing mode.

VSA System Components

Circuit Diagram

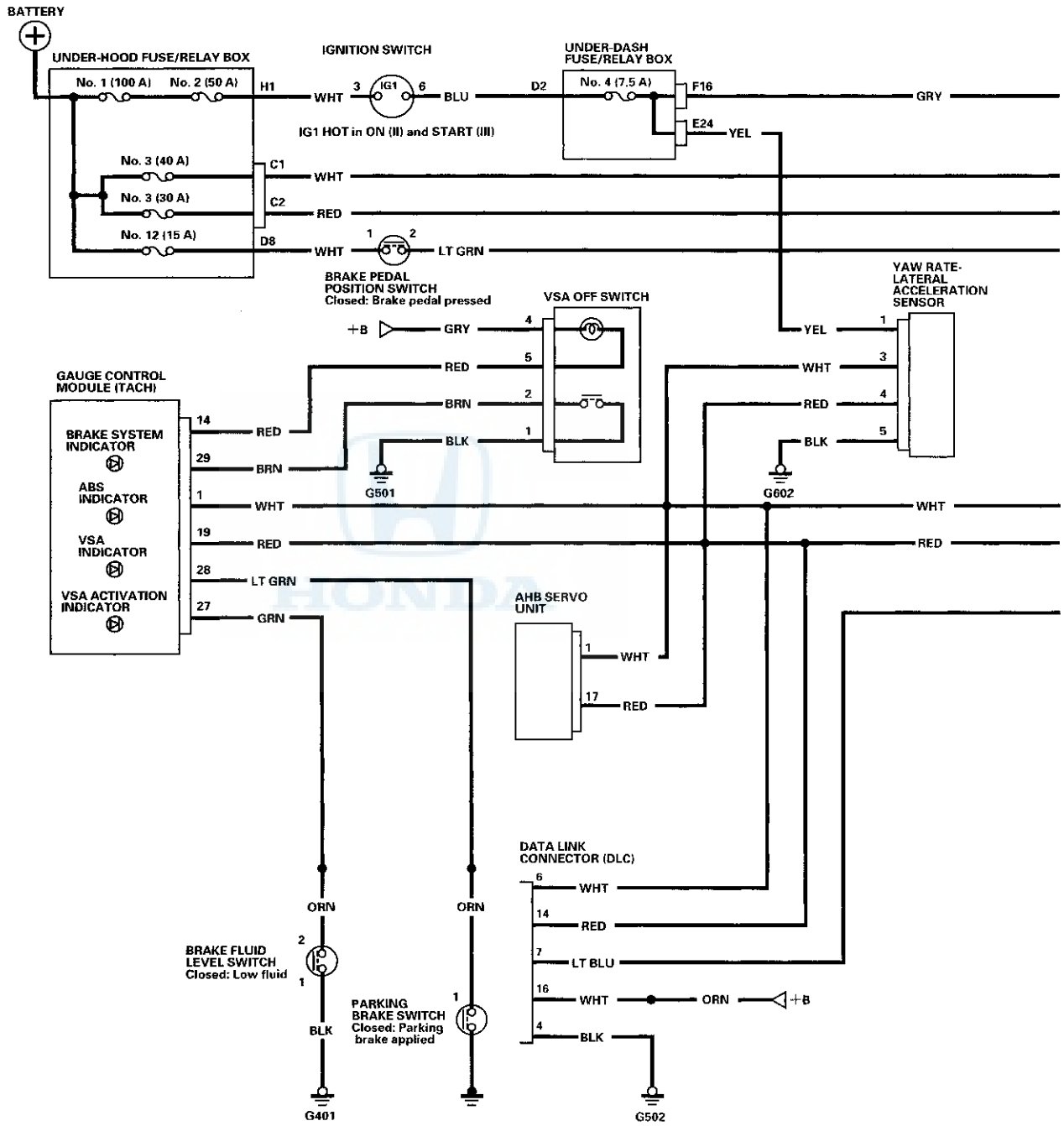

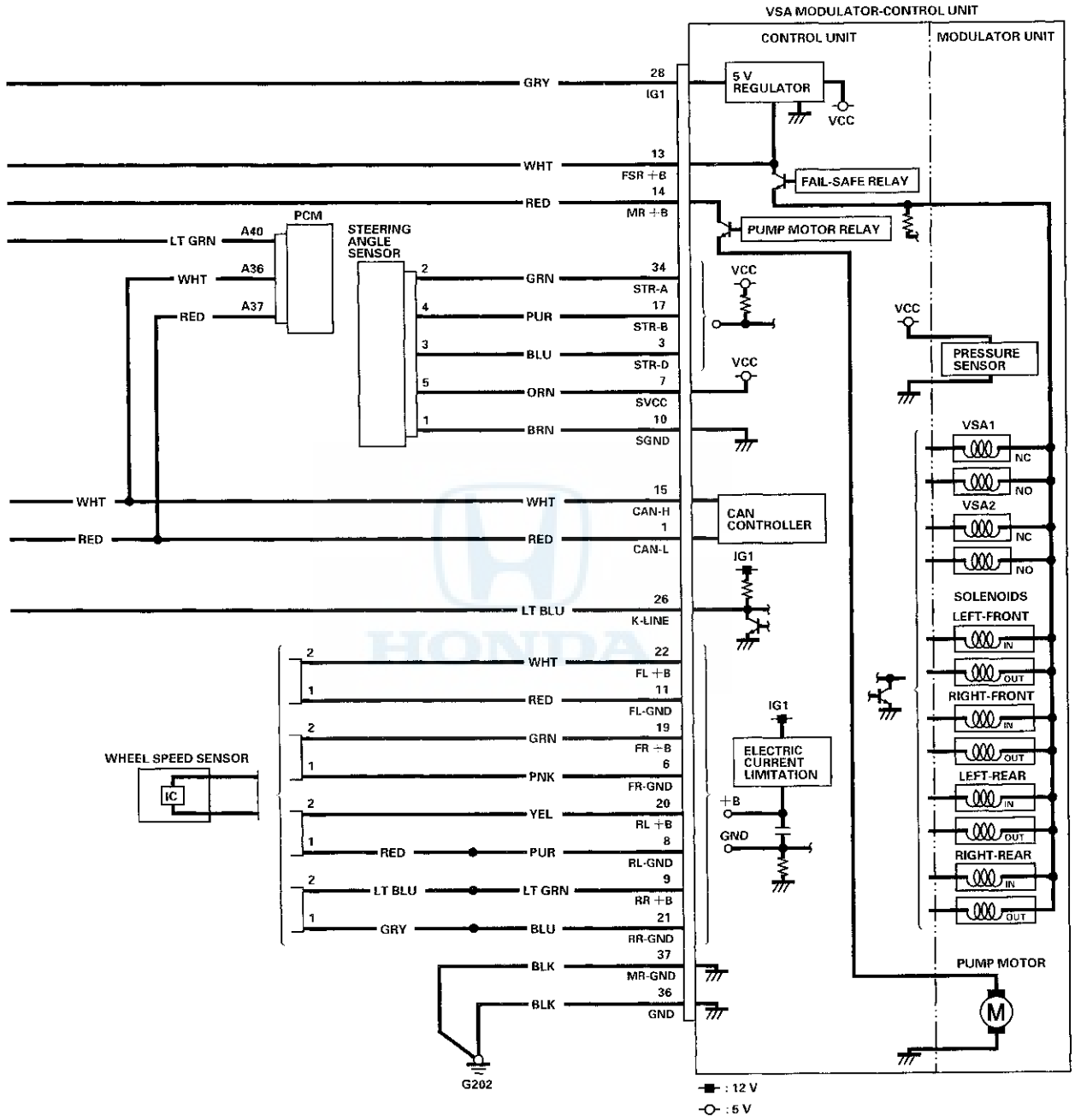
VSA MODULATOR-CONTROL UNIT
CONTROL UNIT
MODULATOR UNIT
GRY
28
IG1
5 V REGULATOR
VCC
WHT
13
FSR +B
FAIL-SAFE RELAY
RED
14
MR +B
PUMP MOTOR RELAY
PCM
LT GRN
A40
WHT
A36
RED
A37
STEERING ANGLE SENSOR
2
GRN
34
STR-A
4
PUR
17
STR-B
3
BLU
3
STR-D
5
ORN
7
SVCC
1
BRN
10
SGND
VCC
PRESSURE SENSOR
VSA1
NC
NO
VSA2
WHT
15
CAN-H
RED
1
CAN-L
CAN CONTROLLER
LT BLU
26
K-LINE
SOLENOIDS
LEFT-FRONT
IN
OUT
RIGHT-FRONT
LEFT-REAR
RIGHT-REAR
WHT
22
FL +B
RED
11
FL-GND
GRN
19
FR +B
PNK
6
FR-GND
YEL
20
RL +B
PUR
8
RL-GND
LT GRN
9
RR +B
BLU
21
RR-GND
WHEEL SPEED SENSOR
IC
BLK
37
MR-GND
BLK
36
GND
G202
+B
GND
ELECTRIC CURRENT LIMITATION
PUMP MOTOR
M
: 12 V
: 5 V

(cont'd)

Circuit Diagram (cont'd)

UNDER-HOOD FUSE/RELAY BOX CONNECTOR C (2P)

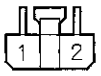

BRAKE PEDAL POSITION SWITCH 4P CONNECTOR

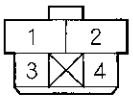

BRAKE FLUID LEVEL SWITCH 2P CONNECTOR

PARKING BRAKE SWITCH 1P CONNECTOR

UNDER-DASH FUSE/RELAY BOX CONNECTOR F (34P)

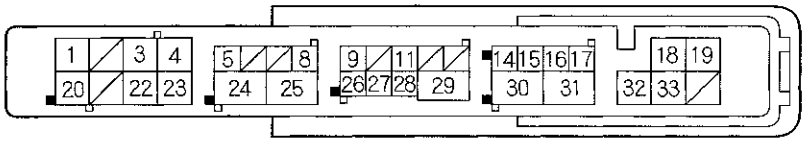

VSA OFF SWITCH 5P CONNECTOR

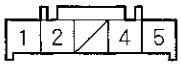

UNDER-DASH FUSE/RELAY BOX CONNECTOR E (42P)

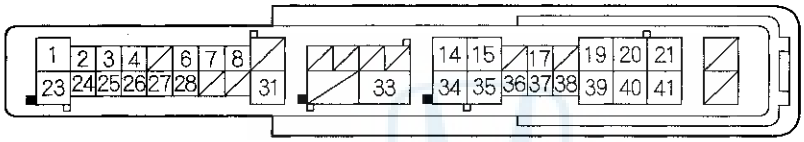

YAW RATE-LATERAL ACCELERATION SENSOR 5P CONNECTOR

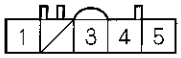

GAUGE CONTROL MODULE (TACH) 36P CONNECTOR

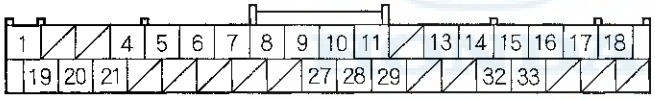

STEERING ANGLE SENSOR 5P CONNECTOR

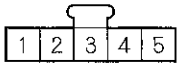

VSA MODULATOR-CONTROL UNIT 37P CONNECTOR

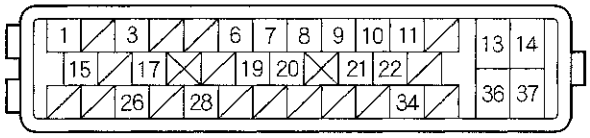

WHEEL SPEED SENSOR 2P CONNECTOR

Wire side of female terminals

PCM CONNECTOR A (44P)

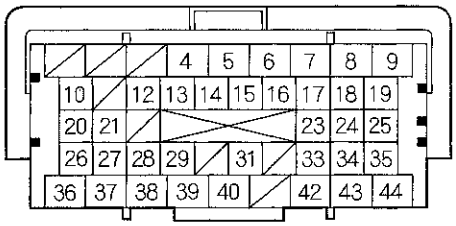

DATA LINK CONNECTOR (DLC)

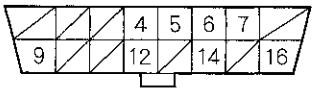

Terminal side of female terminals

DTC Troubleshooting

DTC 11-13: Right-front Wheel Speed Sensor Circuit Malfunction

DTC 13-13: Left-front Wheel Speed Sensor Circuit Malfunction

DTC 15-13: Right-rear Wheel Speed Sensor Circuit Malfunction

DTC 17-13: Left-rear Wheel Speed Sensor Circuit Malfunction

1. Turn the ignition switch to ON (II).
2. Clear the DTC with the HDS.
3. Turn the ignition switch to LOCK (0), then turn it to ON (II) again.
4. Check for DTCs with the HDS.

   Is DTC 11-13, 13-13, 15-13, and/or 17-13 indicated?

   YES—Go to step 5.

   NO—Intermittent failure, the system is OK at this time. Check for loose terminals between the wheel speed sensor 2P connector and the VSA modulator-control unit 37P connector. Refer to intermittent failures troubleshooting (see page 19-163). ■

5. Turn the ignition switch to LOCK (0).
6. Disconnect the VSA modulator-control unit 37P connector (see step 2 on page 19-236).
7. Disconnect the appropriate wheel speed sensor 2P connector.
8. Check for continuity between the appropriate VSA modulator-control unit 37P connector wheel speed sensor +B and GND terminals (see table).

DTC	VSA Modulator-control Unit 37P Connector Terminal	
11-13	No. 19	No. 6
13-13	No. 22	No. 11
15-13	No. 9	No. 21
17-13	No. 20	No. 8

VSA MODULATOR-CONTROL UNIT 37P CONNECTOR

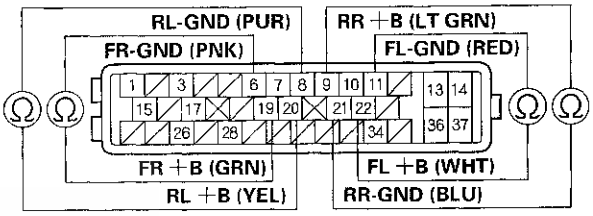

Wire side of female terminals

Is there continuity?

YES—Repair short in the wires between the appropriate wheel speed sensor and the VSA modulator-control unit. ■

NO—Go to step 9.

(cont'd)

DTC Troubleshooting (cont'd)

9. Check for continuity between the appropriate VSA modulator-control unit 37P connector terminal and the wheel speed sensor 2P connector terminal (see table).

DTC	VSA Modulator-control Unit 37P Connector Terminal	Appropriate Wheel Speed Sensor 2P Connector Terminal
11-13	No. 19	Right-front
13-13	No. 22	Left-front
15-13	No. 9	Right-rear
17-13	No. 20	Left-rear

WHEEL SPEED SENSOR 2P CONNECTOR
Terminal side of female terminals

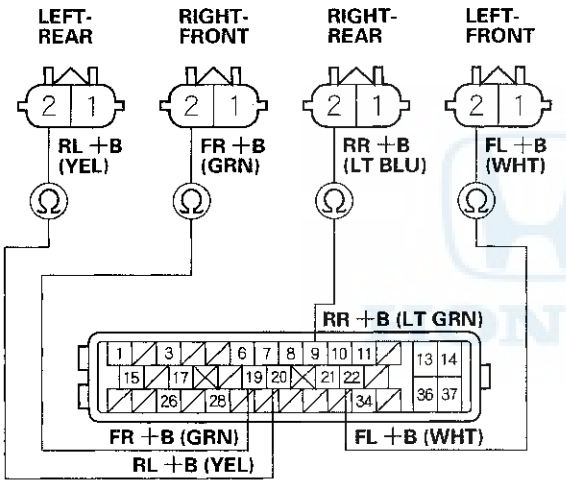

VSA MODULATOR-CONTROL UNIT 37P CONNECTOR
Wire side of female terminals

Is there continuity?

YES—Go to step 10.

NO—Repair open in the wire between the appropriate wheel speed sensor and the VSA modulator-control unit.■

10. Check for continuity between the appropriate VSA modulator-control unit 37P connector terminal and the wheel speed sensor 2P connector terminal (see table).

DTC	VSA Modulator-control Unit 37P Connector Terminal	Appropriate Wheel Speed Sensor 2P Connector Terminal
11-13	No. 6	Right-front
13-13	No. 11	Left-front
15-13	No. 21	Right-rear
17-13	No. 8	Left-rear

WHEEL SPEED SENSOR 2P CONNECTOR
Terminal side of female terminals

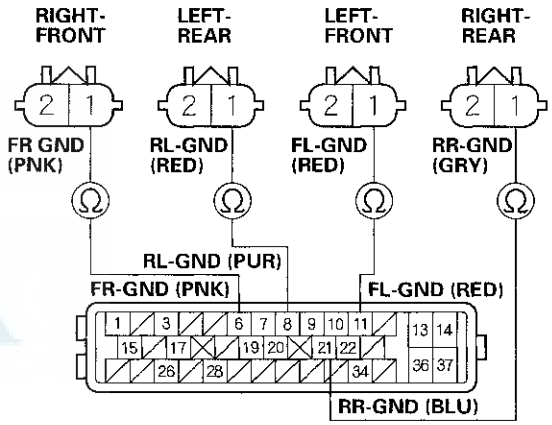

VSA MODULATOR-CONTROL UNIT 37P CONNECTOR
Wire side of female terminals

Is there continuity?

YES—Go to step 11.

NO—Repair open in the wire between the appropriate wheel speed sensor and the VSA modulator-control unit.■

11. Check for continuity between body ground and the appropriate VSA modulator-control unit 37P connector terminal (see table).

DTC	VSA Modulator-control Unit 37P Connector Terminal	
11-13	No. 19	No. 6
13-13	No. 22	No. 11
15-13	No. 9	No. 21
17-13	No. 20	No. 8

VSA MODULATOR-CONTROL UNIT 37P CONNECTOR

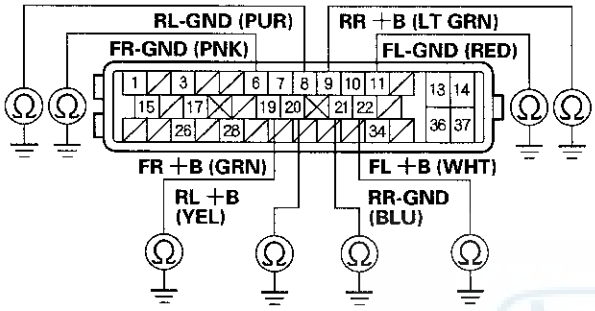

Wire side of female terminals

Is there continuity?

YES—Repair short to body ground in the wire between the appropriate wheel speed sensor and the VSA modulator-control unit.■

NO—Go to step 12.

12. Turn the ignition switch to ON (II).

13. Measure the voltage between body ground and the appropriate VSA modulator-control unit 37P connector terminal (see table).

DTC	VSA Modulator-control Unit 37P Connector Terminal	
11-13	No. 19	No. 6
13-13	No. 22	No. 11
15-13	No. 9	No. 21
17-13	No. 20	No. 8

VSA MODULATOR-CONTROL UNIT 37P CONNECTOR

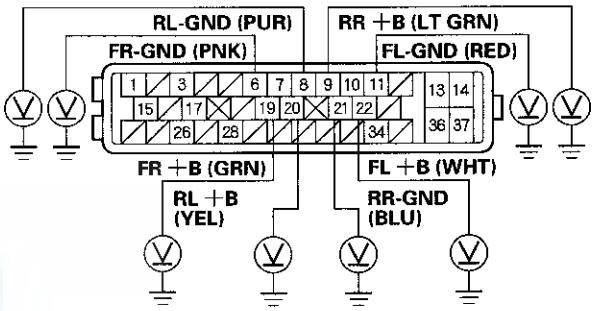

Wire side of female terminals

Is there 0.1 V or more?

YES—Repair short to power in the wire between the appropriate wheel speed sensor and the VSA modulator-control unit.■

NO—Go to step 14.

(cont'd)

DTC Troubleshooting (cont'd)

14. Turn the ignition switch to LOCK (0).

15. Substitute the appropriate wheel speed sensor with opposite wheel speed sensor, or with a known-good wheel speed sensor.

16. Reconnect all connectors.

17. Turn the ignition switch to ON (II).

18. Check for DTCs with the HDS.

19. Turn the ignition switch to LOCK (0), then turn it to ON (II) again.

20. Check for DTCs with the HDS.

    Are any of the DTCs from step 4 indicated?

    YES—Check for loose terminals in the VSA modulator-control unit 37P connector. If necessary, substitute a known-good VSA modulator-control unit (see page 19-236), then retest. ■

    NO—Replace the original wheel speed sensor (see page 19-238). ■

DTC 12-11: Right-front Wheel Speed Sensor Electrical Noise or Intermittent Interruption

DTC 14-11: Left-front Wheel Speed Sensor Electrical Noise or Intermittent Interruption

DTC 16-11: Right-rear Wheel Speed Sensor Electrical Noise or Intermittent Interruption

DTC 18-11: Left-rear Wheel Speed Sensor Electrical Noise or Intermittent Interruption

NOTE: These DTCs may be caused by electrical interference. Check for aftermarket devices installed in the vehicle when these DTCs are indicated.

1. Turn the ignition switch to ON (II).

2. Clear the DTC with the HDS.

3. Test-drive the vehicle.

   NOTE: Drive the vehicle on the road, not on a lift.

4. Check for DTCs with the HDS.

   Is DTC 12-11, 14-11, 16-11, and/or 18-11 indicated?

   YES—If DTC 12-12, 14-12, 16-12, or 18-12 is indicated at the same time, do the DTC 12-12, 14-12, 16-12, or 18-12 troubleshooting first, (see page 19-185). If DTC 12-12, 14-12, 16-12, or 18-12 is not indicated, go to step 5.

   NO—If any other DTCs are indicated, go to the indicated DTCs troubleshooting. If DTCs are not indicated, there is an intermittent failure, the system is OK at this time. Check for loose terminals between the wheel speed sensor 2P connector and the VSA modulator-control unit 37P connector. Refer to intermittent failures troubleshooting (see page 19-163). ■

5. Turn the ignition switch to LOCK (0).

6. Check that the appropriate wheel speed sensor is properly mounted (see page 19-238).

DTC	Appropriate Wheel Speed Sensor
12-11	Right-front
14-11	Left-front
16-11	Right-rear
18-11	Left-rear

Is the wheel speed sensor installation OK?

YES—Check for loose terminals in the VSA modulator-control unit 37P connector. If necessary, substitute a known-good VSA modulator-control unit (see page 19-236), and retest. ■

NO—Reinstall the wheel speed sensor, and check the mounting position (see page 19-238). ■

DTC 12-12: Right-front Wheel Speed Sensor Short to the Other Sensor Circuit

DTC 14-12: Left-front Wheel Speed Sensor Short to the Other Sensor Circuit

DTC 16-12: Right-rear Wheel Speed Sensor Short to the Other Sensor Circuit

DTC 18-12: Left-rear Wheel Speed Sensor Short to the Other Sensor Circuit

1. Turn the ignition switch to ON (II).

2. Clear the DTC with the HDS.

3. Test-drive the vehicle at 13 mph (20 km/h) or more, and go a distance of 328 ft (100 m) or more.

   NOTE: Drive the vehicle on the road, not on a lift.

4. Check for DTCs with the HDS.

   Is DTC 12-12, 14-12, 16-12, and/or 18-12 indicated?

   YES—Go to step 5.

   NO—Intermittent failure, the system is OK at this time. Check for loose terminals between the wheel speed sensor 2P connector and the VSA modulator-control unit 37P connector. Refer to intermittent failures troubleshooting (see page 19-163). ■

(cont'd)

DTC Troubleshooting (cont'd)

5. Turn the ignition switch to LOCK (0).

6. Disconnect the VSA modulator-control unit 37P connector (see step 2 on page 19-236).

7. Check for continuity between the appropriate VSA modulator-control unit 37P connector wheel speed sensor GND terminals (see table).

DTC	VSA Modulator-control Unit 37P Connector Terminal			
	Appropriate Terminal	Other Terminals		
12-12	No. 6	No. 11	No. 21	No. 8
14-12	No. 11	No. 6	No. 21	No. 8
16-12	No. 21	No. 6	No. 11	No. 8
18-12	No. 8	No. 6	No. 11	No. 21

VSA MODULATOR-CONTROL UNIT 37P CONNECTOR

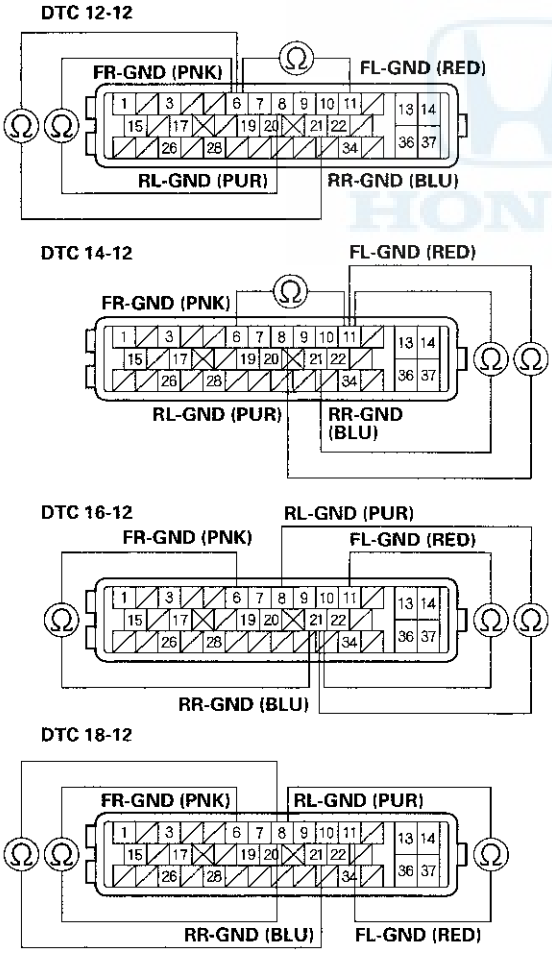

Wire side of female terminals

Is there continuity?

YES—Repair short in the wires between the appropriate wheel speed sensor and the VSA modulator-control unit. ■

NO—Check for loose terminals in the VSA modulator-control unit 37P connector. If necessary, substitute a known-good VSA modulator-control unit (see page 19-236), and retest. ■

DTC 12-21: Right-front Wheel Speed Sensor Installation Error

DTC 14-21: Left-front Wheel Speed Sensor Installation Error

DTC 16-21: Right-rear Wheel Speed Sensor Installation Error

DTC 18-21: Left-rear Wheel Speed Sensor Installation Error

1. Test-drive the vehicle at 7 mph (10 km/h).

   NOTE: Drive the vehicle on the road, not on a lift.

2. Check the RF, LF, RR, LR WHEEL SPEED in the VSA DATA LIST with the HDS.

   Are all four values the same?

   YES—Intermittent failure, the system is OK at this time. Check for loose terminals between the wheel speed sensor 2P connector and the VSA modulator-control unit 37P connector. Refer to intermittent failures troubleshooting (see page 19-163). ■

   NO—Go to step 3.

3. Turn the ignition switch to LOCK (0).

4. Check that the appropriate wheel speed sensor is properly mounted (see page 19-238).

DTC	Appropriate Wheel Speed Sensor
12-21	Right-front
14-21	Left-front
16-21	Right-rear
18-21	Left-rear

Is the wheel speed sensor installation OK?

YES—Replace the appropriate wheel speed sensor (see page 19-238). ■

NO—Reinstall the wheel speed sensor, and check the mounting position (see page 19-238). ■

DTC Troubleshooting (cont'd)

DTC 12-22: Right-front Wheel Speed Sensor Installation Error (19 mph (30 km/h) or More)

DTC 14-22: Left-front Wheel Speed Sensor Installation Error (19 mph (30 km/h) or More)

DTC 16-22: Right-rear Wheel Speed Sensor Installation Error (19 mph (30 km/h) or More)

DTC 18-22: Left-rear Wheel Speed Sensor Installation Error (19 mph (30 km/h) or More)

1. Test-drive the vehicle between 19 mph (30 km/h) and 31 mph (50 km/h) for 70 seconds or more.

   NOTE: Drive the vehicle on the road, not on a lift.

2. Check the RF, LF, RR, LR WHEEL SPEED in the VSA DATA LIST with the HDS.

   Are all four values the same?

   YES—Intermittent failure, the system is OK at this time. Check for loose terminals between the wheel speed sensor 2P connector and the VSA modulator-control unit 37P connector. Refer to intermittent failures troubleshooting (see page 19-163).■

   NO—Go to step 3.

3. Turn the ignition switch to LOCK (0).

4. Check that the appropriate wheel speed sensor is properly mounted (see page 19-238).

DTC	Appropriate Wheel Speed Sensor
12-22	Right-front
14-22	Left-front
16-22	Right-rear
18-22	Left-rear

Is the wheel speed sensor installation OK?

YES—Replace the appropriate wheel speed sensor (see page 19-238).■

NO—Reinstall the wheel speed sensor, and check the mounting position (see page 19-238).■

DTC 12-23: Right-front Wheel Speed Sensor Installation Error (0 to 9 mph (0 to 15 km/h))

DTC 14-23: Left-front Wheel Speed Sensor Installation Error (0 to 9 mph (0 to 15 km/h))

DTC 16-23: Right-rear Wheel Speed Sensor Installation Error (0 to 9 mph (0 to 15 km/h))

DTC 18-23: Left-rear Wheel Speed Sensor Installation Error (0 to 9 mph (0 to 15 km/h))

1. Test-drive the vehicle between 1 mph (1 km/h) and 9 mph (15 km/h).

   NOTE: Drive the vehicle on the road, not on a lift.

2. Check the RF, LF, RR, LR WHEEL SPEED in the VSA DATA LIST with the HDS.

   Are all four values the same?

   YES—Intermittent failure, the system is OK at this time. Check for loose terminals between the wheel speed sensor 2P connector and the VSA modulator-control unit 37P connector. Refer to intermittent failures troubleshooting (see page 19-163).■

   NO—Go to step 3.

3. Turn the ignition switch to LOCK (0).

4. Check that the appropriate wheel speed sensor is properly mounted (see page 19-238).

DTC	Appropriate Wheel Speed Sensor
12-23	Right-front
14-23	Left-front
16-23	Right-rear
18-23	Left-rear

Is the wheel speed sensor installation OK?

YES—Replace the appropriate wheel speed sensor (see page 19-238).■

NO—Reinstall the wheel speed sensor, and check the mounting position (see page 19-238).■

DTC 21-11: Right-front Magnetic Encoder (Wheel Bearing) Malfunction (Pulse Missing)

DTC 22-11: Left-front Magnetic Encoder (Wheel Bearing) Malfunction (Pulse Missing)

DTC 23-11: Right-rear Magnetic Encoder (Wheel Bearing) Malfunction (Pulse Missing)

DTC 24-11: Left-rear Magnetic Encoder (Wheel Bearing) Malfunction (Pulse Missing)

1. Turn the ignition switch to ON (II).

2. Clear the DTC with the HDS.

3. Test-drive the vehicle at 13 mph (20 km/h) or more, and go a distance of 328 ft (100 m) or more.

   NOTE: Drive the vehicle on the road, not on a lift.

4. Check for DTCs with the HDS.

   Is DTC 21-11, 22-11, 23-11, and/or 24-11 indicated?

   YES—Go to step 5.

   NO—Intermittent failure, the system is OK at this time. Check for loose terminals between the wheel speed sensor 2P connector and the VSA modulator-control unit 37P connector. Refer to intermittent failures troubleshooting (see page 19-163).■

5. Turn the ignition switch to LOCK (0).

6. Inspect the appropriate magnetic encoder for damage, debris, and correct installation.

DTC	Appropriate Magnetic Encoder	Note
21-11	Right-front	Remove the driveshaft outboard joint from the appropriate wheel hub (see page 18-18).
22-11	Left-front	
23-11	Right-rear	Remove the hub bearing unit (see page 18-31).
24-11	Left-rear	

Is the magnetic encoder surface OK?

YES—Remove the debris from the magnetic encoder, or replace the wheel bearing (front) or the hub bearing unit (rear):■

- Front: Replace the front wheel bearing (see page 18-18).
- Rear: Replace the rear hub bearing unit (see page 18-31).

NO—Clean off debris from the appropriate magnetic encoder surface on the wheel bearing or the hub bearing unit, then go to step 1, and recheck. If the DTC is still present, replace the appropriate wheel bearing or hub bearing unit.■

DTC Troubleshooting (cont'd)

DTC 25-12: Yaw Rate Sensor Internal Circuit Malfunction (Open, Short)

DTC 25-13: Yaw Rate Sensor Communication Error

DTC 25-18: Yaw Rate/Lateral Acceleration Sensor Internal Circuit Malfunction

DTC 25-21: Yaw Rate Sensor Neutral Position Malfunction

DTC 26-12: Lateral Acceleration Sensor Internal Circuit Malfunction (Open, Short)

DTC 26-13: Lateral Acceleration Sensor Communication Error

1. Turn the ignition switch to ON (II).
2. Clear the DTC with the HDS.
3. Turn the ignition switch to LOCK (0), then turn it to ON (II) again.
4. Check for DTCs with the HDS.

   Is DTC 25-12, 25-13, 25-18, 25-21, 26-12, or 26-13 indicated?

   YES—Replace the yaw rate-lateral acceleration sensor (see page 19-234).■

   NO—Intermittent failure, the system is OK at this time.■

DTC 25-17: Yaw Rate/Lateral Acceleration Sensor Power Source Voltage Malfunction

1. Turn the ignition switch to ON (II).
2. Clear the DTC with the HDS.
3. Turn the ignition switch to LOCK (0), then turn it to ON (II) again.
4. Check for DTCs with the HDS.

   Is DTC 25-17 indicated?

   YES—If DTC 61-01, 61-21, 61-22, 61-23, and/or 62-21 is indicated at the same time, check the 12 V battery performance (see page 22-61), and troubleshoot the charging system indicator circuit first (see page 12-179). If DTC 61-01, 61-21, 61-22, 61-23, and/or 62-21 is not indicated at the same time, replace the yaw rate-lateral acceleration sensor (see page 19-234).■

   NO—Intermittent failure, the system is OK at this time.■

DTC 25-19: Yaw Rate/Lateral Acceleration Sensor Startup Time Malfunction

DTC 25-23: Yaw Rate Sensor Circuit Intermittent Interruption

1. Turn the ignition switch to ON (II).
2. Clear the DTC with the HDS.
3. Turn the ignition switch to LOCK (0), then turn it to ON (II) again.
4. Wait 60 seconds or more.
5. Check for DTCs with the HDS.

   Is DTC 25-19 or 25-23 indicated?

   YES—Replace the yaw rate-lateral acceleration sensor (see page 19-234). ■

   NO—Intermittent failure, the system is OK at this time. ■

DTC 25-22: Yaw Rate Sensor Stuck

1. Turn the ignition switch to ON (II).
2. Clear the DTC with the HDS.
3. Test-drive the vehicle. Drive the vehicle at 7 mph (10 km/h) or more.

   NOTE: Drive the vehicle on the road, not on a lift.

4. Check for DTCs with the HDS.

   Is DTC 25-22 indicated?

   YES—Go to step 5.

   NO—If any other DTCs are indicated, go to the indicated DTCs troubleshooting. If DTCs are not indicated, there was an intermittent failure, the system is OK at this time. ■

5. Test-drive the vehicle. Check the YAW RATE S in the VSA DATA LIST with the HDS while driving in corners.

   Does the indicated value change?

   YES—Intermittent failure, the system is OK at this time. ■

   NO—Replace the yaw rate-lateral acceleration sensor (see page 19-234). ■

DTC Troubleshooting (cont'd)

DTC 25-24: Yaw Rate Sensor Gain Low

DTC 25-25: Yaw Rate Sensor Gain High

DTC 26-24: Lateral Acceleration Sensor Gain Low

DTC 26-25: Lateral Acceleration Sensor Gain High

1. Turn the ignition switch to ON (II).
2. Clear the DTC with the HDS.
3. Test-drive the vehicle at 10 mph (15 km/h) or more.

   NOTE: Drive the vehicle on the road, not on a lift.
4. Check for DTCs with the HDS.

   Is DTC 25-24, 25-25, 26-24, or 26-25 indicated?

   YES—Replace the yaw rate-lateral acceleration sensor (see page 19-234). ■

   NO—Intermittent failure, the system is OK at this time. ■

DTC 26-21: Lateral Acceleration Sensor Neutral Position Malfunction

DTC 26-23: Lateral Acceleration Sensor Circuit Intermittent Interruption

NOTE: While doing this troubleshooting, avoid vibrations or shaking the vehicle.

1. Turn the ignition switch to ON (II).
2. Clear the DTC with the HDS.
3. Turn the ignition switch to LOCK (0), then turn it to ON (II) again.
4. Wait 60 seconds or more.
5. Check for DTCs with the HDS.

   Is DTC 26-21 or 26-23 indicated?

   YES—Replace the yaw rate-lateral acceleration sensor (see page 19-234). ■

   NO—Intermittent failure, the system is OK at this time. ■

DTC 26-22: Lateral Acceleration Sensor Stuck

1. Turn the ignition switch to ON (II).
2. Clear the DTC with the HDS.
3. Test-drive the vehicle at 7 mph (10 km/h) or more.

   NOTE: Drive the vehicle on the road, not on a lift.
4. Check for DTCs with the HDS.

   Is DTC 26-22 indicated?

   YES—Go to step 5.

   NO—If any other DTCs are indicated, go to the indicated DTCs troubleshooting. If DTCs are not indicated, there was an intermittent failure, the system is OK at this time.■
5. Test-drive the vehicle. Check the YAW RATE S in the VSA DATA LIST with the HDS while driving in corners.

   Does the indicated value change?

   YES—Intermittent failure, the system is OK at this time.■

   NO—Replace the yaw rate-lateral acceleration sensor (see page 19-234).■

HONDA

DTC Troubleshooting (cont'd)

DTC 27-11: Steering Angle Sensor DIAG Signal Error (Initial)

DTC 27-26: Steering Angle Sensor DIAG Signal Error (Main)

1. Turn the ignition switch to ON (II).
2. Clear the DTC with the HDS.
3. Turn the ignition switch to LOCK (0), then turn it to ON (II) again.
4. Check for DTCs with the HDS.

   Is DTC 27-11 or 27-26 indicated?

   YES—Go to step 5.

   NO—Intermittent failure, the system is OK at this time. Check for loose terminals between the steering angle sensor 5P connector and the VSA modulator-control unit 37P connector. Refer to intermittent failures troubleshooting (see page 19-163). ■

5. Turn the ignition switch to LOCK (0).
6. Disconnect the steering angle sensor 5P connector.
7. Disconnect the VSA modulator-control unit 37P connector (see step 2 on page 19-236).
8. Check for continuity between steering angle sensor 5P connector terminal No. 3 and body ground.

STEERING ANGLE SENSOR 5P CONNECTOR

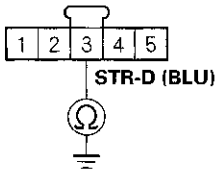

Wire side of female terminals

Is there continuity?

YES—Repair short to body ground in the wire between the steering angle sensor and the VSA modulator-control unit. ■

NO—Go to step 9.

9. Check for continuity between the VSA modulator-control unit 37P connector terminal and the steering angle sensor 5P connector terminal individually (see table).

Sign	VSA Modulator-control Unit 37P Connector Terminal	Steering Angle Sensor 5P Connector Terminal
STR-D	No. 3	No. 3
SVCC	No. 7	No. 5
SGND	No. 10	No. 1

STEERING ANGLE SENSOR 5P CONNECTOR
Wire side of female terminals

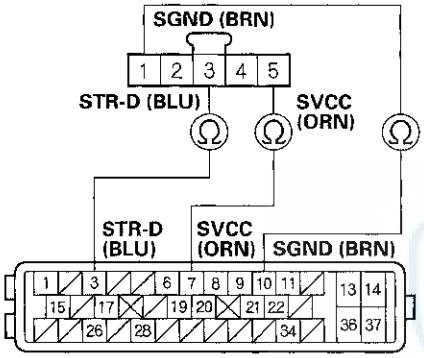

VSA MODULATOR-CONTROL UNIT 37P CONNECTOR
Wire side of female terminals

Is there continuity?

YES—Go to step 10.

NO—Repair open in the wire between the steering angle sensor and the VSA modulator-control unit.■

10. Turn the ignition switch to ON (II).

11. Measure the voltage between steering angle sensor 5P connector terminal No. 3 and body ground.

STEERING ANGLE SENSOR 5P CONNECTOR

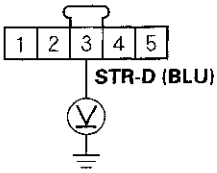

Wire side of female terminals

Is there 0.1 V or more?

YES—Repair short to power in the wire between the steering angle sensor and the VSA modulator-control unit.■

NO—Replace the steering angle sensor (see page 19-233).■

DTC Troubleshooting (cont'd)

DTC 27-21: Steering Angle Sensor Stuck Neutral Position

DTC 27-22: Steering Angle Sensor Stuck Offset Position

1. Turn the ignition switch to ON (II).

2. Turn the steering wheel left and right 90 degrees or more. Check the STEERING ANGLE in the VSA DATA LIST with the HDS.

   Is there +90 ° or more, and −90 ° or less?

   YES—Intermittent failure, the system is OK at this time. Check for loose terminals between the steering angle sensor 5P connector and the VSA modulator-control unit 37P connector. Refer to intermittent failures troubleshooting (see page 19-163).■

   NO—Go to step 3.

3. Turn the ignition switch to LOCK (0).

4. Disconnect the steering angle sensor 5P connector.

5. Disconnect the VSA modulator-control unit 37P connector (see step 2 on page 19-236).

6. Check for continuity between body ground and steering angle sensor 5P connector terminals No. 2 and No. 4 individually.

STEERING ANGLE SENSOR 5P CONNECTOR

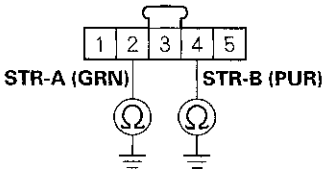

Wire side of female terminals

Is there continuity?

YES—Repair short to body ground in the wire between the steering angle sensor and the VSA modulator-control unit.■

NO—Go to step 7.

7. Check for continuity between the VSA modulator-control unit 37P connector terminal and the steering angle sensor 5P connector terminal individually.

Sign	VSA Modulator-control Unit 37P Connector Terminal	Steering Angle Sensor 5P Connector Terminal
STR-A	No. 34	No. 2
STR-B	No. 17	No. 4
SVCC	No. 7	No. 5
SGND	No. 10	No. 1

STEERING ANGLE SENSOR 5P CONNECTOR
Wire side of female terminals

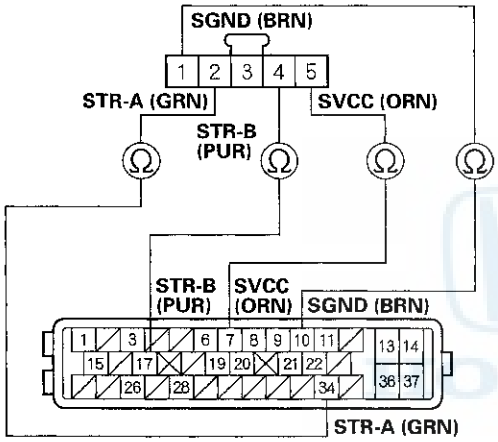

VSA MODULATOR-CONTROL UNIT 37P CONNECTOR
Wire side of female terminals

Is there continuity?

YES—Go to step 8.

NO—Repair open in the wire between the steering angle sensor and the VSA modulator-control unit.■

8. Check for continuity between steering angle sensor 5P connector terminals No. 2 and No. 4.

STEERING ANGLE SENSOR 5P CONNECTOR

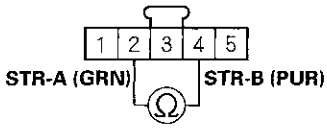

Wire side of female terminals

Is there continuity?

YES—Repair short in the wires between the steering angle sensor and the VSA modulator-control unit.■

NO—Go to step 9.

9. Check for continuity between steering angle sensor 5P connector terminals No. 5 and No. 2, and between No. 5 and No. 4 individually.

STEERING ANGLE SENSOR 5P CONNECTOR

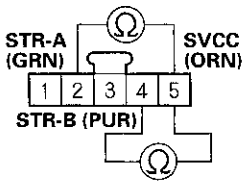

Wire side of female terminals

Is there continuity?

YES—Repair short in the wires between the steering angle sensor and the VSA modulator-control unit.■

NO—Go to step 10.

(cont'd)

DTC Troubleshooting (cont'd)

10. Check for continuity between steering angle sensor 5P connector terminals No. 1 and No. 2, and between No. 1 and No. 4 individually.

STEERING ANGLE SENSOR 5P CONNECTOR

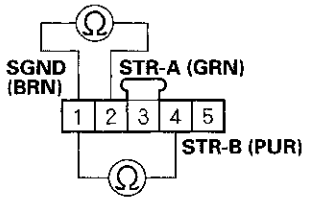

Wire side of female terminals

Is there continuity?

YES—Repair short in the wires between the steering angle sensor and the VSA modulator-control unit.■

NO—Go to step 11.

11. Turn the ignition switch to ON (II).

12. Measure the voltage between body ground and steering angle sensor 5P connector terminals No. 2 and No. 4 individually.

STEERING ANGLE SENSOR 5P CONNECTOR

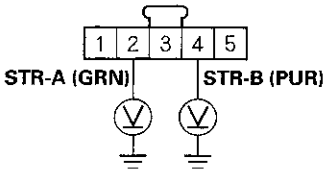

Wire side of female terminals

Is there 0.1 V or more?

YES—Repair short to power in the wire between the steering angle sensor and the VSA modulator-control unit.■

NO—Replace the steering angle sensor (see page 19-233).■

DTC 27-23: Steering Angle Sensor Counter Malfunction

1. Turn the ignition switch to ON (II).
2. Clear the DTC with the HDS.
3. Turn the ignition switch to LOCK (0), then turn it to ON (II) again.
4. Turn the steering wheel from lock to lock.
5. Check for DTCs with the HDS.

   Is DTC 27-23 indicated?

   YES—Replace the steering angle sensor (see page 19-233).■

   NO—Intermittent failure, the system is OK at this time.■

DTC 27-24: Steering Angle Sensor Exchange Malfunction

1. Turn the ignition switch to ON (II).
2. Turn the steering wheel one turn from where the center. Check the STEERING ANGLE in the VSA DATA LIST with the HDS.

   Is there about 288–432 °(–288– –432 °)?

   YES—Intermittent failure, the system is OK at this time.■

   NO—Replace the steering angle sensor (see page 19-233).■

DTC Troubleshooting (cont'd)

DTC 31-xx*: ABS Right-front Inlet Solenoid Valve Malfunction

DTC 32-xx*: ABS Right-front Outlet Solenoid Valve Malfunction

DTC 33-xx*: ABS Left-front Inlet Solenoid Valve Malfunction

DTC 34-xx*: ABS Left-front Outlet Solenoid Valve Malfunction

DTC 35-xx*: ABS Right-rear Inlet Solenoid Valve Malfunction

DTC 36-xx*: ABS Right-rear Outlet Solenoid Valve Malfunction

DTC 37-xx*: ABS Left-rear Inlet Solenoid Valve Malfunction

DTC 38-xx*: ABS Left-rear Outlet Solenoid Valve Malfunction

*: Any two-character subcode (see table)

Subcode	Malfunction	Note (DTC)
01	Solenoid Initial Pulse	31-01, 32-01, 33-01, 34-01, 35-01, 36-01, 37-01, 38-01
21	Solenoid Pulse	31-21, 32-21, 33-21, 34-21, 35-21, 36-21, 37-21, 38-21
22	Solenoid Speculative	31-22, 32-22, 33-22, 34-22, 35-22, 36-22, 37-22, 38-22
23	Solenoid Stuck ON	31-23, 32-23, 33-23, 34-23, 35-23, 36-23, 37-23, 38-23

1. Turn the ignition switch to ON (II).
2. Clear the DTC with the HDS.
3. Turn the ignition switch to LOCK (0), then turn it to ON (II) again.
4. Check for DTCs with the HDS.

   Is DTC 31-xx, 32-xx, 33-xx, 34-xx, 35-xx, 36-xx, 37-xx, or 38-xx indicated?

   YES—Replace the VSA modulator-control unit (see page 19-236).■

   NO—Intermittent failure, the system is OK at this time.■

DTC 41-21: Right-front Wheel Lock

DTC 42-21: Left-front Wheel Lock

DTC 43-21: Right-rear Wheel Lock

DTC 44-21: Left-rear Wheel Lock

The DTCs may be indicated under these conditions:

- The vehicle goes into a spin.
- The ABS or VSA continues to operate for a long time.
- Snow, dirt, or debris build-up on the wheel speed sensor or magnetic encoder.
- Misadjusted brake pedal position switch.
- Contaminated brake fluid.

1. Raise the vehicle, and support it with safety stands in the proper locations (see page 1-10).

2. Turn the appropriate wheel by hand.

DTC	Appropriate Wheel
41-21	Right-front
42-21	Left-front
43-21	Right-rear
44-21	Left-rear

Is there brake drag?

YES—Repair the brake drag.■

NO—Go to step 3.

3. Check that the appropriate wheel speed sensor is properly mounted (see page 19-238).

Is the wheel speed sensor installation OK?

YES—Go to step 4.

NO—Reinstall the wheel speed sensor, and check the mounting position (see page 19-238).■

4. Turn the ignition switch to ON (II).

5. Clear the DTC with the HDS.

6. Test-drive the vehicle. Drive the vehicle at 7 mph (10 km/h) for 20 seconds or more.

NOTE: Drive the vehicle on the road, not on a lift.

7. Check for DTCs with the HDS.

Is DTC 41-21, 42-21, 43-21, and/or 44-21 indicated?

YES—Check for loose terminals between the wheel speed sensor 2P connector and the VSA modulator-control unit 37P connector. If necessary, substitute a known-good VSA modulator-control unit (see page 19-236), and retest.■

NO—If any other DTCs are indicated, go to the indicated DTCs troubleshooting. If DTCs are not indicated, intermittent failure, the system is OK at this time.■

HONDA

DTC Troubleshooting (cont'd)

DTC 51-11: Motor Lock

DTC 51-13: Motor Relay OFF Malfunction

1. Turn the ignition switch to ON (II).
2. Clear the DTC with the HDS.
3. Turn the ignition switch to LOCK (0), then turn it to ON (II) again.
4. Wait 5 seconds.
5. Operate any one of the four solenoids, as listed, in the VSA FUNCTION TEST five times with the HDS.

-LFT FT SOLENOID
-RT FT SOLENOID
-LFT REAR SOLENOID
-RT REAR SOLENOID

6. Check for DTCs with the HDS.

   Is DTC 51-11 or 51-13 indicated?

   YES—Replace the VSA modulator-control unit (see page 19-236). ■

   NO—Intermittent failure, the system is OK at this time. ■

DTC 51-12: Motor Lock Circuit Malfunction

1. Turn the ignition switch to ON (II).
2. Clear the DTC with the HDS.
3. Turn the ignition switch to LOCK (0), then turn it to ON (II) again.
4. Check for DTCs with the HDS.

   Is DTC 51-12 indicated?

   YES—Go to step 5.

   NO—Intermittent failure, the system is OK at this time. Check for loose terminals at the VSA modulator-control unit 37P connector. Refer to intermittent failures troubleshooting (see page 19-163). ■

5. Turn the ignition switch to LOCK (0).
6. Check the No. 3 (30 A) fuse in the under-hood fuse/relay box.

   Is the fuse blown?

   YES—Go to step 7.

   NO—Reinstall the checked fuse, then go to step 14.

7. Disconnect the VSA modulator-control unit 37P connector (see step 2 on page 19-236).

8. Check for continuity between VSA modulator-control unit 37P connector terminal No. 14 and body ground.

VSA MODULATOR-CONTROL UNIT 37P CONNECTOR

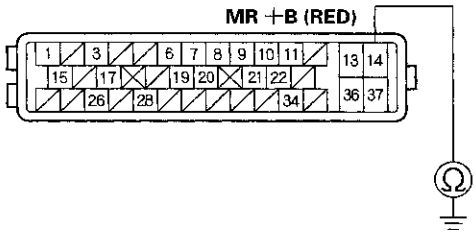

Wire side of female terminals

Is there continuity?

YES—Repair short to body ground in the wire between the No. 3 (30 A) fuse in the under-hood fuse/relay box and the VSA modulator-control unit. ■

NO—Install a new No. 3 (30 A) fuse in the under-hood fuse/relay box, then go to step 9.

9. Reconnect the VSA modulator-control unit 37P connector.

10. Turn the ignition switch to ON (II).

11. Clear the DTC with the HDS.

12. Turn the ignition switch to LOCK (0), then turn it to ON (II) again.

13. Check for DTCs with the HDS.

Is DTC 51-12 indicated?

YES—Replace the VSA modulator-control unit (see page 19-236). ■

NO—Troubleshooting is complete. ■

(cont'd)

DTC Troubleshooting (cont'd)

14. Disconnect the VSA modulator-control unit 37P connector (see step 2 on page 19-236).

15. Measure the voltage between VSA modulator-control unit 37P connector terminal No. 14 and body ground.

VSA MODULATOR-CONTROL UNIT 37P CONNECTOR

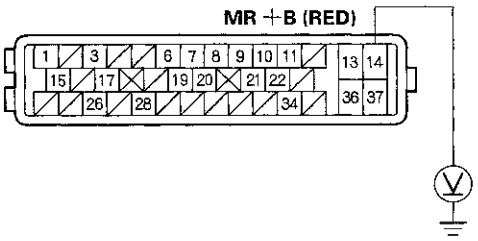

Wire side of female terminals

Is there battery voltage?

YES—Check for loose terminals in the VSA modulator-control unit 37P connector. If necessary, substitute a known-good VSA modulator-control unit (see page 19-236), and retest. ■

NO—Repair open in the wire between the No. 3 (30 A) fuse in the under-hood fuse/relay box and the VSA modulator-control unit. ■

DTC 52-12: Motor Stuck OFF

1. Turn the ignition switch to ON (II).

2. Clear the DTC with the HDS.

3. Turn the ignition switch to LOCK (0), then turn it to ON (II) again.

4. Operate any one of the four solenoids, as listed, in the VSA FUNCTION TEST five times with the HDS.

-LFT FT SOLENOID
-RT FT SOLENOID
-LFT REAR SOLENOID
-RT REAR SOLENOID

5. Check for DTCs with the HDS.

Is DTC 52-12 indicated?

YES—Replace the VSA modulator-control unit (see page 19-236). ■

NO—Intermittent failure, the system is OK at this time. ■

DTC 53-01: Motor Relay Stuck ON 1

DTC 53-12: Motor Relay Stuck ON 2

1. Turn the ignition switch to ON (II).
2. Clear the DTC with the HDS.
3. Turn the ignition switch to LOCK (0), then turn it to ON (II) again.
4. Check for DTCs with the HDS.

   Is DTC 53-01 or 53-12 indicated?

   YES—Go to step 5.

   NO—Intermittent failure, the system is OK at this time. Check for loose terminals at the VSA modulator-control unit 37P connector. Refer to intermittent failures troubleshooting (see page 19-163). ■

5. Turn the ignition switch to LOCK (0).
6. Disconnect the VSA modulator-control unit 37P connector (see step 2 on page 19-236).
7. Check for continuity between VSA modulator-control unit 37P connector terminal No. 37 and body ground.

VSA MODULATOR-CONTROL UNIT 37P CONNECTOR

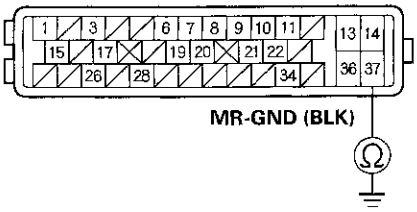

Wire side of female terminals

Is there continuity?

YES—Check for loose terminals in the VSA modulator-control unit 37P connector. If necessary, substitute a known-good VSA modulator-control unit (see page 19-236), and retest. ■

NO—Repair open in the wire between the VSA modulator-control unit and body ground (G202). ■

DTC Troubleshooting (cont'd)

DTC 54-03: Fail-safe Relay 1 Stuck ON

DTC 54-04: Fail-safe Relay 1 Stuck OFF (Initial)

DTC 54-21: Fail-safe Relay 1 Stuck OFF (Main)

1. Turn the ignition switch to ON (II).
2. Clear the DTC with the HDS.
3. Turn the ignition switch to LOCK (0), then turn it to ON (II) again.
4. Check for DTCs with the HDS.

   Is DTC 54-03, 54-04, or 54-21 indicated?

   YES—Replace the VSA modulator-control unit (see page 19-236).■

   NO—Intermittent failure, the system is OK at this time.■

DTC 56-01: Initial VIG FET Stuck OFF

DTC 56-02: Initial VIG FET Stuck ON

DTC 56-11: VIG FET Stuck OFF

1. Turn the ignition switch to ON (II).
2. Clear the DTC with the HDS.
3. Turn the ignition switch to LOCK (0), then turn it to ON (II) again.
4. Check for DTCs with the HDS.

   Is DTC 56-01, 56-02, or 56-11 indicated?

   YES—Replace the VSA modulator-control unit (see page 19-236).■

   NO—Intermittent failure, the system is OK at this time.■

DTC 61-01: VSA Modulator-control Unit Initial IG Low Voltage

DTC 61-21: VSA Modulator-control Unit Power Source Low Voltage 1

DTC 61-22: VSA Modulator-control Unit Power Source Low Voltage 2

DTC 61-23: VSA Modulator-control Unit Power Source Low Voltage 3

1. Turn the ignition switch to ON (II).

2. Clear the DTC with the HDS.

3. Turn the ignition switch to LOCK (0), then start the engine.

4. Check for DTCs with the HDS.

   Is DTC 61-01, 61-21, 61-22, or 61-23 indicated?

   YES—Go to step 5.

   NO—Intermittent failure, the system is OK at this time. Check for loose terminals at the VSA modulator-control unit 37P connector. Refer to intermittent failures troubleshooting (see page 19-163).■

5. Check and note BATTERY voltage in the VSA DATA LIST with the HDS.

6. Using a voltmeter, measure and note the voltage between the battery terminals.

   NOTE: If the battery voltage is below 9.5 V, check the 12V battery performance (see page 22-61), and troubleshoot the charging system (see page 12-179).

7. Compare the data list voltage noted in step 5 to the battery voltage in step 6.

   Is the difference between the two voltage readings less then 3 V?

   YES—Intermittent failure, the system is OK at this time. Check for loose terminals at the VSA modulator-control unit 37P connector. Refer to intermittent failures troubleshooting (see page 19-163). If the code resets after clearing, replace the VSA modulator-control unit (see page 19-236).■

   NO—Check for loose terminals in the VSA modulator-control unit 37P connector. If necessary, substitute a known-good VSA modulator-control unit (see page 19-236), and retest.■

DTC Troubleshooting (cont'd)

DTC 62-21: VSA Modulator-control Unit IG High Voltage

1. Turn the ignition switch to ON (II).
2. Clear the DTC with the HDS.
3. Turn the ignition switch to LOCK (0), then start the engine.
4. Check for DTCs with the HDS.

   Is DTC 62-21 indicated?

   YES—Go to step 5.

   NO—Intermittent failure, the system is OK at this time. ■

5. Check and note BATTERY voltage in the VSA DATA LIST with the HDS.
6. Using a voltmeter, measure and note the voltage between the battery terminals.

   NOTE: If the battery voltage is above 15.1 V, troubleshoot the charging system (see page 12-179).

7. Compare the data list voltage noted in step 5 to the battery voltage in step 6.

   Is the difference between the two voltage readings less then 3 V?

   YES—Intermittent failure, the system is OK at this time. Check for loose terminals at the VSA modulator-control unit 37P connector. Refer to intermittent failures troubleshooting (see page 19-163). If the code resets after clearing, replace the VSA modulator-control unit (see page 19-236). ■

   NO—Replace the VSA modulator-control unit (see page 19-236), and retest. ■

DTC 64-11: Steering Angle Sensor Power Circuit Short

1. Turn the ignition switch to ON (II).
2. Clear the DTC with the HDS.
3. Turn the ignition switch to LOCK (0), then turn it to ON (II) again.
4. Check for DTCs with the HDS.

   Is DTC 64-11 indicated?

   YES—Go to step 5.

   NO—Intermittent failure, the system is OK at this time. ■

5. Turn the ignition switch to LOCK (0).
6. Disconnect the steering angle sensor 5P connector.
7. Disconnect the VSA modulator-control unit 37P connector (see step 2 on page 19-236).

8. Check for continuity between steering angle sensor 5P connector terminal No. 5 and body ground.

STEERING ANGLE SENSOR 5P CONNECTOR

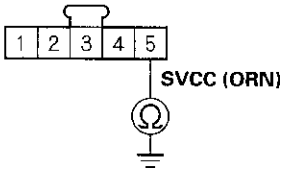

Wire side of female terminals

Is there continuity?

YES—Repair short to body ground in the wire between the steering angle sensor and the VSA modulator-control unit. ■

NO—Replace the VSA modulator-control unit (see page 19-236). ■

DTC 64-12: Steering Angle Sensor Power Circuit Open

1. Turn the ignition switch to ON (II).
2. Clear the DTC with the HDS.
3. Turn the ignition switch to LOCK (0), then turn it to ON (II) again.
4. Check for DTCs with the HDS.

   Is DTC 64-12 indicated?

   YES—Go to step 5.

   NO—Intermittent failure, the system is OK at this time. Check for loose terminals between the steering angle sensor 5P connector and the VSA modulator-control unit 37P connector. Refer to intermittent failures troubleshooting (see page 19-163). ■

5. Turn the ignition switch to LOCK (0).
6. Disconnect the steering angle sensor 5P connector.
7. Disconnect the VSA modulator-control unit 37P connector (see step 2 on page 19-236).

(cont'd)

DTC Troubleshooting (cont'd)

8. Check for continuity between VSA modulator-control unit 37P connector terminal No. 7 and steering angle sensor 5P connector terminal No. 5.

STEERING ANGLE SENSOR 5P CONNECTOR
Wire side of female terminals

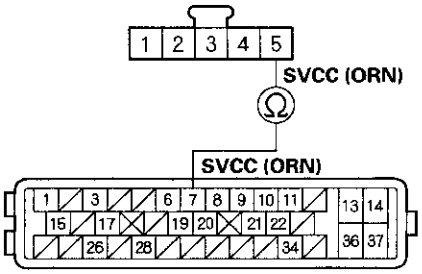

VSA MODULATOR-CONTROL UNIT 37P CONNECTOR
Wire side of female terminals

Is there continuity?

YES—Go to step 9.

NO—Repair open in the wire between the steering angle sensor and the VSA modulator-control unit.■

9. Turn the ignition switch to ON (II).

10. Measure the voltage between steering angle sensor 5P connector terminal No. 5 and body ground.

STEERING ANGLE SENSOR 5P CONNECTOR

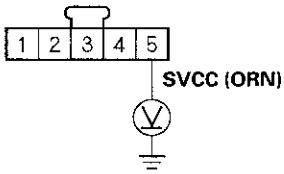

Wire side of female terminals

Is there 0.1 V or more?

YES—Repair short to power in the wire between the steering angle sensor and the VSA modulator-control unit.■

NO—Check for loose terminals in the VSA modulator-control unit 37P connector. If necessary, substitute a known-good VSA modulator-control unit (see page 19-236), and retest.■

DTC 65-21: Brake Fluid Level Stuck ON

NOTE: Bleeding the brake system while the ignition switch is ON can cause this DTC.

1. Check the brake fluid level in the subreservoir.

   Is the brake fluid level OK?

   YES—Go to step 2.

   NO—Do the brake pad inspection: Front (see page 19-12), rear (see page 19-20), check for brake fluid leaks or replace worn brake pads, then go to step 2, and recheck.

2. Turn the ignition switch to ON (II).

3. Clear the DTC with the HDS.

4. Turn the ignition switch to LOCK (0), then turn it to ON (II) again.

5. Check for DTCs with the HDS.

   Is DTC 65-21 indicated?

   YES—Go to step 6.

   NO—Intermittent failure, the system is OK at this time.■

6. Release the parking brake.

7. Turn the ignition switch to LOCK (0), then turn it to ON (II) again.

8. Check the brake system indicator in the gauge control module (tach).

   Does the indicator come on then go off?

   YES—Check for loose terminals in the VSA modulator-control unit 37P connector. If necessary, substitute a known-good VSA modulator-control unit (see page 19-236), and retest.■

   NO—Go to step 9.

9. Check the BRAKE FLUID LEVEL SWITCH in the VSA DATA LIST with the HDS.

   Does the HDS indicate the BRAKE FLUID LEVEL SWITCH as OFF?

   YES—Substitute a known-good gauge control module (tach), then go to step 1, and recheck. If no DTCs are indicated, replace the original gauge control module (tach) (see page 22-255).

   NO—Go to step 10.

10. Disconnect the brake fluid level switch 2P connector, then check the BRAKE FLUID LEVEL SWITCH in the VSA DATA LIST.

    Does the HDS indicate OFF?

    YES— Replace the brake fluid subreservoir (the brake fluid level switch is included) (see page 19-100).

    NO—Go to step 11.

11. Disconnect the gauge control module (tach) 36P connector.

(cont'd)

DTC Troubleshooting (cont'd)

12. Check for continuity between brake fluid level switch 2P connector terminal No. 2 and body ground.

BRAKE FLUID LEVEL SWITCH 2P CONNECTOR

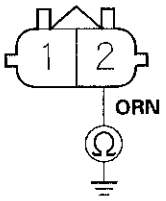

Wire side of female terminals

Is there continuity?

YES—Repair short to body ground in the wire between the gauge control module (tach) and the brake fluid level switch. ■

NO—Substitute a known-good gauge control module (tach), then go to step 1 and recheck. If no DTCs are indicated, replace the original gauge control module (tach) (see page 22-255).

DTC 66-11: Pressure Sensor (Inside of VSA Modulator-control Unit) Malfunction

DTC 66-12: Pressure Sensor (Inside of VSA Modulator-control Unit) Malfunction

DTC 66-13: Pressure Sensor (Inside of VSA Modulator-control Unit) Malfunction

DTC 66-14: Pressure Sensor (Inside of VSA Modulator-control Unit) Malfunction

DTC 66-16: Pressure Sensor (Inside of VSA Modulator-control Unit) Malfunction

1. Turn the ignition switch to ON (II).
2. Clear the DTC with the HDS.
3. Turn the ignition switch to LOCK (0), then turn it to ON (II) again.
4. Check for DTCs with the HDS.

   Is DTC 66-11, 66-12, 66-13, 66-14, or 66-16 indicated?

   YES—Replace the VSA modulator-control unit (see page 19-236). ■

   NO—Intermittent failure, the system is OK at this time. ■

DTC 66-15: Pressure Sensor (Inside of VSA Modulator-control Unit) Malfunction

1. Test-drive the vehicle.

   NOTE: Drive the vehicle on the road, not on a lift.

2. Turn the ignition switch to LOCK (0).

3. Raise the vehicle, and support it with safety stands in the proper locations (see page 1-10).

4. Turn all four wheels by hand.

   Is there brake drag?

   YES—Repair the brake drag.■

   NO—Go to step 5.

5. Turn the ignition switch to ON (II).

6. Check the BRAKE PRESS in the VSA DATA LIST with the HDS while moving the brake pedal.

   Does the indicated value change?

   YES—Intermittent failure, the system is OK at this time.■

   NO—Replace the VSA modulator-control unit (see page 19-236).■

DTC 68-21: Brake Pedal Position Switch Stuck OFF

1. Start the engine.

2. Check the BRAKE PRESS in the VSA DATA LIST with the HDS. Do not press the brake pedal.

   Is there 10 MPa or less?

   YES—Go to step 3.

   NO—Check for brake drag or a misadjusted brake pedal position switch. If they are normal, replace the VSA modulator-control unit (see page 19-236). ■

3. Check the BRAKE SWITCH in the VSA DATA LIST with the HDS while moving the brake pedal.

   Does it indicate ON when the pedal is pressed, and OFF when the pedal is released?

   YES—Intermittent failure, the system is OK at this time. Check for loose terminals between the brake pedal position switch 4P connector, PCM connector A (44P), and the VSA modulator-control unit 37P connector. Refer to intermittent failures troubleshooting (see page 19-163).■

   NO—Go to step 4.

4. Turn the ignition switch to LOCK (0).

5. Disconnect the brake pedal position switch 4P connector.

(cont'd)

DTC Troubleshooting (cont'd)

6. Connect the brake pedal position switch 4P connector terminal No. 1 and No. 2 to with a jumper wire.

BRAKE PEDAL POSITION SWITCH 4P CONNECTOR

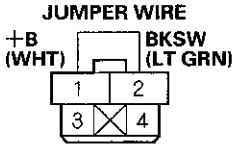

Wire side of female terminals

7. Turn the ignition switch to ON (II).

8. Check the BRAKE SWITCH in the VSA DATA LIST with the HDS.

   Does it indicate ON?

   YES—Check the brake pedal position switch adjustment (see page 19-6). If it is OK, replace the brake pedal position switch. ■

   NO—Go to step 9.

9. Disconnect the jumper wire.

10. Turn the ignition switch to LOCK (0).

11. Short the SCS line with the HDS.

12. Disconnect PCM connector A (44P).

13. Check for continuity between brake pedal position switch 4P connector terminal No. 2 and PCM connector A (44P) terminal No. 40.

PCM CONNECTOR A (44P)
Terminal side of female terminals

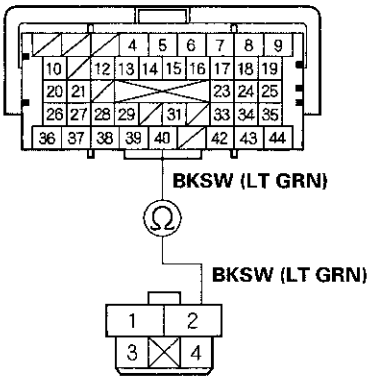

BRAKE PEDAL POSITION SWITCH 4P CONNECTOR
Wire side of female terminals

Is there continuity?

YES—Update the PCM if it does not have the latest software (see page 11-236), or substitute a known-good PCM (see page 11-7), then go to step 1, and recheck. If the PCM was updated and DTCs are not indicated, troubleshooting is complete. If the PCM was substituted and DTCs are not indicated, replace the original PCM (see page 11-238).

NO—Repair open in the wire between the PCM and the brake pedal position switch. ■

DTC 68-22: Brake Pedal Position Switch Stuck ON

1. Turn the ignition switch to ON (II).

2. Check the BRAKE PRESS in the VSA DATA LIST with the HDS. Do not press the brake pedal.

   Is it 10 MPa or more?

   YES—Check the brake pedal height and the brake pedal position switch adjustment (see page 19-6). If the brake pedal height and the brake pedal position switch adjustment is OK, replace the VSA modulator-control unit (see page 19-236).■

   NO—Go to step 3.

3. Check the BRAKE SWITCH in the VSA DATA LIST with the HDS while moving the brake pedal.

   Does it indicate ON when the pedal is pressed, and OFF when the pedal is released?

   YES—Intermittent failure, the system is OK at this time.■

   NO—Go to step 4.

4. Check the BRAKE SWITCH in the VSA DATA LIST with the HDS, and disconnect the brake pedal position switch 4P connector.

   Does the indicator change from ON to OFF?

   YES—Inspect the brake pedal position switch and adjustment (see page 19-6). If the brake pedal position switch and adjustment are OK, replace the brake pedal position switch (see page 19-6).■

   NO—Go to step 5.

5. Turn the ignition switch to LOCK (0).

6. Short the SCS line with the HDS.

7. Disconnect PCM connector A (44P).

8. Turn the ignition switch to ON (II).

9. Measure the voltage between brake pedal position switch 4P connector terminal No. 2 and body ground.

BRAKE PEDAL POSITION SWITCH 4P CONNECTOR

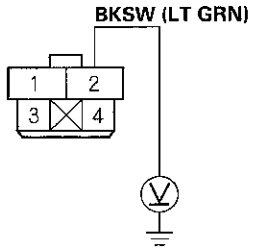

Wire side of female terminals

Is there 0.1 V or more?

YES—Repair short to power in the wire between the PCM and the brake pedal position switch.■

NO—Update the PCM if it does not have the latest software (see page 11-236), or substitute a known-good PCM (see page 11-7), then go to step 1, and recheck. If the PCM was updated and DTCs are not indicated, troubleshooting is complete. If the PCM was substituted and DTCs are not indicated, replace the original PCM (see page 11-238).

DTC Troubleshooting (cont'd)

DTC 71-21: Right-front or Left-rear Different Diameter Tire Malfunction

DTC 71-22: Left-front or Right-rear Different Diameter Tire Malfunction

DTC 71-23: Right-front and Right-rear Different Diameter Tire Malfunction

DTC 71-24: Left-front and Left-rear Different Diameter Tire Malfunction

DTC 71-25: Right-front and Left-front Different Diameter Tire Malfunction

DTC 71-26: Right-rear and Left-rear Different Diameter Tire Malfunction

DTC 71-27: Right-front or Left-rear Different Diameter Tire Malfunction

DTC 71-28: Left-front or Right-rear Different Diameter Tire Malfunction

DTC 71-29: Right-front and Right-rear Different Diameter Tire Malfunction

DTC 71-2A: Left-front and Left-rear Different Diameter Tire Malfunction

DTC 71-2B: Right-front and Left-front Different Diameter Tire Malfunction

DTC 71-2C: Right-rear and Left-rear Different Diameter Tire Malfunction

NOTE: The DTC is indicated when the vehicle has a different diameter tire(s) compared to the other tire(s).

DTC	Sectional
71-21	Right-front or left-rear
71-22	Left-front or right-rear
71-23	Right-front and right-rear
71-24	Left-front and left-rear
71-25	Right-front and left-front
71-26	Right-rear and left-rear
71-27	Right-front or left-rear
71-28	Left-front or right-rear
71-29	Right-front and right-rear
71-2A	Left-front and left-rear
71-2B	Right-front and left-front
71-2C	Right-rear and left-rear

1. Check the tires for proper inflation and the correct size (see page 18-6).
2. Turn the ignition switch to ON (II).
3. Clear the DTC with the HDS.
4. Test-drive the vehicle.

   NOTE: Drive the vehicle on the road, not on a lift.

5. Check for DTCs with the HDS.

   Is DTC 71-21, 71-22, 71-23, 71-24, 71-25, 71-26, 71-27, 71-28, 71-29, 71-2A, 71-2B, or 71-2C indicated?

   YES—Replace tires as needed until all their diameters match (see page 18-6). ■

   NO—Intermittent failure, the system is OK at this time. ■

DTC 81-xx*: Central Processing Unit (CPU) Internal Circuit Malfunction

*: Any two-character subcode (Except these combinations: DTC 81-11, 81-3D, 81-3E, 81-51, 81-52, 81-53, 81-54, 81-55, 81-56, 81-57, 81-58, and 81-59)

1. Turn the ignition switch to ON (II).
2. Clear the DTC with the HDS.
3. Turn the ignition switch to LOCK (0), then turn it to ON (II) again.
4. Check for DTCs with the HDS.

   Is DTC 81-xx indicated?

   YES—If DTC 81-11, 81-3D, 81-3E, 81-51, 81-52, 81-53, 81-54, 81-55, 81-56, 81-57, 81-58, or 81-59 is indicated at the same time, do the appropriate troubleshooting first. If DTC 81-11, 81-3D, 81-3E, 81-51, 81-52, 81-53, 81-54, 81-55, 81-56, 81-57, 81-58, or 81-59 is not indicated. Replace the VSA modulator-control unit (see page 19-236).■

   NO—Intermittent failure, the system is OK at this time.■

DTC 81-11: Central Processing Unit (CPU) Internal Circuit Malfunction

DTC 81-52: Central Processing Unit (CPU) Internal Circuit Malfunction

DTC 81-54: Central Processing Unit (CPU) Internal Circuit Malfunction

DTC 81-56: Central Processing Unit (CPU) Internal Circuit Malfunction

DTC 81-58: Central Processing Unit (CPU) Internal Circuit Malfunction

1. Turn the ignition switch to ON (II).
2. Clear the DTC with the HDS.
3. Test-drive the vehicle.

   NOTE: Drive the vehicle on the road, not on a lift.

4. Check for DTCs with the HDS.

   Is DTC 81-11, 81-52, 81-54, 81-56, or 81-58 indicated?

   YES—Replace the VSA modulator-control unit (see page 19-236).■

   NO—Intermittent failure, the system is OK at this time.■

DTC Troubleshooting (cont'd)

DTC 81-51: Central Processing Unit (CPU) Internal Circuit Malfunction

DTC 81-53: Central Processing Unit (CPU) Internal Circuit Malfunction

DTC 81-55: Central Processing Unit (CPU) Internal Circuit Malfunction

DTC 81-57: Central Processing Unit (CPU) Internal Circuit Malfunction

1. Turn the ignition switch to ON (II).
2. Clear the DTC with the HDS.
3. Test-drive the vehicle.

   NOTE: Drive the vehicle on the road, not on a lift.
4. Check for DTCs with the HDS.

   Is DTC 81-51, 81-53, 81-55, or 81-57 indicated?

   YES—Go to step 5.

   NO—Intermittent failure, the system is OK at this time.■
5. Turn the ignition switch to LOCK (0).
6. Disconnect the VSA modulator-control unit 37P connector (see step 2 on page 19-236).
7. Turn the ignition switch to ON (II).
8. Measure the voltage between body ground and the appropriate VSA modulator-control unit 37P connector terminals (see table).

DTC	VSA Modulator-control Unit 37P Connector Terminals
81-51	No. 19
81-53	No. 22
81-55	No. 9
81-57	No. 20

VSA MODULATOR-CONTROL UNIT 37P CONNECTOR

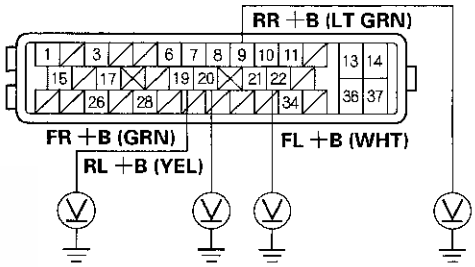

Wire side of female terminals

Is there 0.1 V or more?

YES—Repair short to power in the wire between the appropriate wheel speed sensor and the VSA modulator-control unit.■

NO—Replace the VSA modulator-control unit (see page 19-236).■

DTC 81-3D: Central Processing Unit (CPU) Internal Circuit Malfunction

DTC 81-3E: Central Processing Unit (CPU) Internal Circuit Malfunction

DTC 81-59: Central Processing Unit (CPU) Internal Circuit Malfunction

1. Turn the ignition switch to ON (II).
2. Clear the DTC with the HDS.
3. Start the engine.
4. Turn the steering wheel from lock to lock several times.
5. Check for DTCs with the HDS.

   Is DTC 81-3D, 81-3E, or 81-59 indicated?

   YES—Replace the VSA modulator-control unit (see page 19-236). ■

   NO—Intermittent failure, the system is OK at this time. ■

DTC 83-13: PCM Communication Error

DTC 83-14: PCM Communication Error

1. Turn the ignition switch to ON (II).
2. Clear the DTC with the HDS.
3. Test-drive the vehicle.

   NOTE: Drive the vehicle on the road, not on a lift.

4. Check for DTCs with the HDS.

   Is DTC 83-13 or 83-14 indicated?

   YES—Go to step 5.

   NO—Intermittent failure, the system is OK at this time. Check for loose terminals between PCM connector A (44P) and the VSA modulator-control unit 37P connector. Refer to intermittent failures troubleshooting (see page 19-163). ■

5. Turn the ignition switch to LOCK (0).
6. Update the PCM if it does not have the latest software (see page 11-236), or substitute a known-good PCM (see page 11-7).
7. Turn the ignition switch to ON (II).
8. Clear the DTC with the HDS.
9. Test-drive the vehicle.

   NOTE: Drive the vehicle on the road, not on a lift.

10. Check for DTCs with the HDS.

    Is DTC 83-13 or 83-14 indicated?

    YES—Replace the VSA modulator-control unit (see page 19-236). ■

    NO—If the PCM was updated, troubleshooting is complete. If the PCM was substituted, replace the original PCM (see page 11-238).

DTC Troubleshooting (cont'd)

DTC 84-21: VSA Sensor Neutral Position not Writing

1. Turn the ignition switch to ON (II).
2. Clear the DTC with the HDS.
3. Do the VSA sensor neutral position memorization (see page 19-234).
4. Turn the ignition switch to LOCK (0), then turn it to ON (II) again.
5. Check for DTCs with the HDS.

   Is DTC 84-21 indicated?

   YES—Check for loose terminals in the VSA modulator-control unit 37P connector. If necessary, substitute a known-good VSA modulator-control unit (see page 19-236), and retest. ■

   NO—The system is OK at this time. ■

DTC 86-01: F-CAN Bus-off Malfunction

1. Turn the ignition switch to ON (II).
2. Clear the DTC with the HDS.
3. Turn the ignition switch to LOCK (0), then turn it to ON (II) again.
4. Check for DTCs with the HDS.

   Is DTC 86-01 indicated?

   YES—Go to step 5.

   NO—Intermittent failure, the system is OK at this time. Check for loose terminals between PCM connector A (44P) and the VSA modulator-control unit 37P connector. Refer to intermittent failures troubleshooting (see page 19-163). ■

5. Turn the ignition switch to LOCK (0).
6. Short the SCS line with the HDS.
7. Disconnect PCM connector A (44P).
8. Disconnect the VSA modulator-control unit 37P connector (see step 2 on page 19-236).

9. Check for continuity between the VSA modulator-control unit 37P connector terminal and PCM connector A (44P) terminal (see table).

Sign	VSA Modulator-control Unit 37P Connector Terminal	PCM Connector A (44P) Terminal
CAN-L	No. 1	No. 37
CAN-H	No. 15	No. 36

VSA MODULATOR-CONTROL UNIT 37P CONNECTOR
Wire side of female terminals

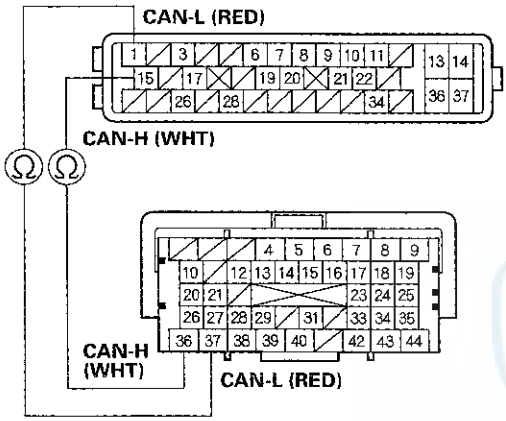

PCM CONNECTOR A (44P)
Terminal side of female terminals

Is there continuity?

YES—Check for loose terminals in the VSA modulator-control unit 37P connector. If necessary, substitute a known-good VSA modulator-control unit (see page 19-236), and retest. ■

NO—Repair open in the wire between the PCM and the VSA modulator-control unit. ■

DTC 86-11: F-CAN Communication with PCM Malfunction

DTC 86-21: F-CAN Communication with Engine Malfunction

DTC 86-22: F-CAN Communication with Engine Malfunction

DTC 86-23: F-CAN Communication with Engine Malfunction

DTC 86-24: F-CAN Communication with Engine Malfunction

DTC 86-25: F-CAN Communication with Engine Malfunction

DTC 86-41: F-CAN Communication with CVT Malfunction

1. Turn the ignition switch to ON (II).
2. Clear the DTC with the HDS.
3. Test-drive the vehicle at 7 mph (10 km/h) or more.

   NOTE: Drive the vehicle on the road, not on a lift.

4. Check for DTCs with the HDS.

   Is DTC 86-11, 86-21, 86-22, 86-23, 86-24, 86-25, and/or 86-41 indicated?

   YES—If DTC 86-01 is indicated at the same time, do the DTC 86-01 troubleshooting first (see page 19-220). If DTC 86-01 is not indicated, go to step 5.

   NO—If any other DTCs are indicated, go to the indicated DTCs troubleshooting. If DTCs are not indicated, there was an intermittent failure, the system is OK at this time. Check for loose terminals between PCM connector A (44P) and the VSA modulator-control unit 37P connector. Refer to intermittent failures troubleshooting (see page 19-163). ■

(cont'd)

DTC Troubleshooting (cont'd)

5. Turn the ignition switch to LOCK (0).

6. Short the SCS line with the HDS.

7. Disconnect PCM connector A (44P).

8. Disconnect the VSA modulator-control unit 37P connector (see step 2 on page 19-236).

9. Check for continuity between the VSA modulator-control unit 37P connector terminal and PCM connector A (44P) terminal (see table).

Sign	VSA Modulator-control Unit 37P Connector Terminal	PCM Connector A (44P) Terminal
CAN-L	No. 1	No. 37
CAN-H	No. 15	No. 36

VSA MODULATOR-CONTROL UNIT 37P CONNECTOR
Wire side of female terminals

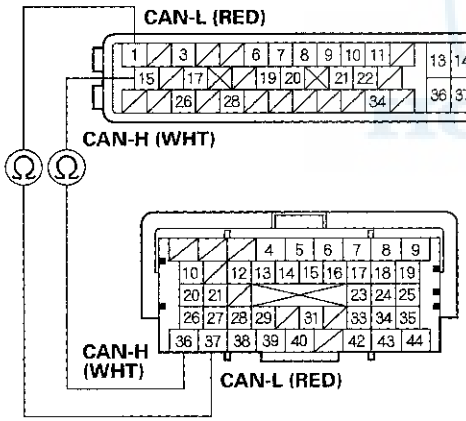

PCM CONNECTOR A (44P)
Terminal side of female terminals

Is there continuity?

YES—Go to step 10.

NO—Repair open in the wire between the PCM and the VSA modulator-control unit. ■

10. Reconnect all connectors.

11. Update the PCM if it does not have the latest software (see page 11-236), or substitute a known-good PCM (see page 11-7).

12. Clear the DTC with the HDS.

13. Test-drive the vehicle at 7 mph (10 km/h) or more.

    NOTE: Drive the vehicle on the road, not on a lift.

14. Check for DTCs with the HDS.

    Is DTC 86-11, 86-21, 86-22, 86-23, 86-24, 86-25, and/or 86-41 indicated?

    YES—Check for loose terminals in the VSA modulator-control unit 37P connector. If necessary, substitute a known-good VSA modulator-control unit (see page 11-236), and retest. ■

    NO—If the PCM was updated, troubleshooting is complete. If the PCM was substituted, replace the original PCM (see page 11-238). ■

DTC 86-31: F-CAN Communication with Gauge Control Module Malfunction

1. Turn the ignition switch to ON (II).

2. Clear the DTC with the HDS.

3. Turn the ignition switch to LOCK (0), then turn it to ON (II) again.

4. Check for DTCs with the HDS.

   Is DTC 86-31 indicated?

   YES—If DTC 86-01 is indicated at the same time, do the DTC 86-01 troubleshooting first (see page 19-220). If DTC 86-01 is not indicated, go to step 5.

   NO—If any other DTCs are indicated, go to the indicated DTCs troubleshooting. If DTCs are not indicated, there was an intermittent failure, the system is OK at this time. Check for loose terminals between the gauge control module (tach) 36P connector and the VSA modulator-control unit 37P connector. Refer to intermittent failures troubleshooting (see page 19-163).■

5. Turn the ignition switch to LOCK (0), then turn it to ON (II) again.

   Does the gauge indicators come on?

   YES—Go to step 6.

   NO—Do the gauge control module troubleshooting (see page 22-223).■

6. Turn the ignition switch to LOCK (0).

7. Disconnect the gauge control module (tach) 36P connector.

8. Disconnect the VSA modulator-control unit 37P connector (see step 2 on page 19-236).

9. Check for continuity between the VSA modulator-control unit 37P connector terminal and gauge control module (tach) 36P connector terminal (see table).

Sign	VSA Modulator-control Unit 37P Connector Terminal	Gauge Control Module (Tach) 36P Connector Terminal
CAN-L	No. 1	No. 19
CAN-H	No. 15	No. 1

VSA MODULATOR-CONTROL UNIT 37P CONNECTOR
Wire side of female terminals

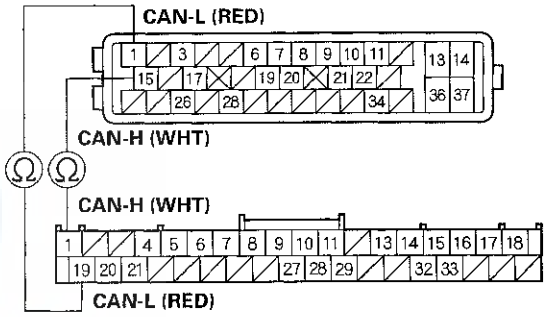

GAUGE CONTROL MODULE (TACH) 36P CONNECTOR
Wire side of female terminals

Is there continuity?

YES—Check for loose terminals in the gauge control module (tach) 36P connector. If necessary, substitute a known-good gauge control module (tach), then go to step 1, and recheck. If no DTCs are indicated, replace the original gauge control module (tach) (see page 22-255). If DTC 86-31 resets, replace the VSA modulator-control unit (see page 19-236).

NO—Repair open in the wire between the gauge control module (tach) and the VSA modulator-control unit.■

DTC Troubleshooting (cont'd)

DTC 86-71: F-CAN Communication with Yaw Rate-Lateral Acceleration Sensor Malfunction

1. Turn the ignition switch to ON (II).
2. Clear the DTC with the HDS.
3. Turn the ignition switch to LOCK (0), then turn it to ON (II) again.
4. Check for DTCs with the HDS.

   Is DTC 86-71 indicated?

   YES—If DTC 86-01 is indicated at the same time, do the DTC 86-01 troubleshooting first (see page 19-220). If DTC 86-01 is not indicated, go to step 5.

   NO—If any other DTCs are indicated, go to the indicated DTCs troubleshooting. If DTCs are not indicated, there was an intermittent failure, the system is OK at this time. Check for loose terminals at the yaw rate-lateral acceleration sensor 5P connector and the VSA modulator-control unit 37P connector. Refer to intermittent failures troubleshooting (see page 19-163).■

5. Turn the ignition switch to LOCK (0).
6. Disconnect the yaw rate-lateral acceleration sensor 5P connector (see page 19-234).
7. Disconnect the VSA modulator-control unit 37P connector (see step 2 on page 19-236).
8. Check for continuity between the VSA modulator-control unit 37P connector terminal and the yaw rate-lateral acceleration sensor 5P connector terminal (see table).

Sign	VSA Modulator-control Unit 37P Connector Terminal	Yaw Rate-lateral Acceleration Sensor 5P Connector Terminal
CAN-L	No. 1	No. 4
CAN-H	No. 15	No. 3

VSA MODULATOR-CONTROL UNIT 37P CONNECTOR
Wire side of female terminals

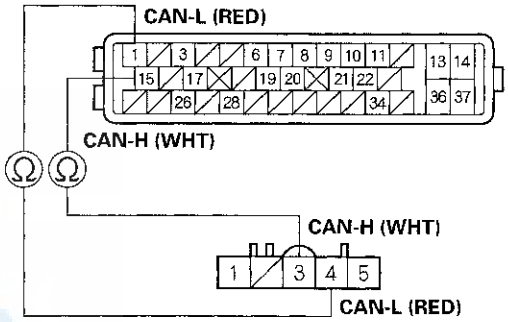

YAW RATE-LATERAL ACCELERATION SENSOR 5P CONNECTOR
Wire side of female terminals

Is there continuity?

YES—Go to step 9.

NO—Repair open in the wire between the yaw rate-lateral acceleration sensor and the VSA modulator-control unit.■

9. Turn the ignition switch to ON (II).

10. Measure the voltage between yaw rate-lateral acceleration sensor 5P connector terminal No. 1 and body ground.

YAW RATE-LATERAL ACCELERATION SENSOR 5P CONNECTOR

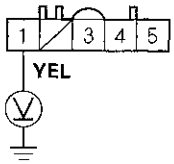

Wire side of female terminals

Is there battery voltage?

YES—Go to step 11.

NO—Check the No. 4 (7.5 A) fuse in the under-dash fuse/relay box. If the fuse is OK, repair open in the wire between the No. 4 (7.5 A) fuse and yaw rate-lateral acceleration sensor.■

11. Turn the ignition switch to LOCK (0).

12. Reconnect the yaw rate-lateral acceleration sensor 5P connector.

13. Turn the ignition switch to ON (II).

14. Measure the voltage between yaw rate-lateral acceleration sensor 5P connector terminal No. 5 and body ground.

YAW RATE-LATERAL ACCELERATION SENSOR 5P CONNECTOR

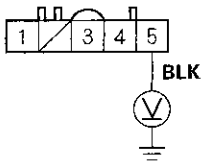

Wire side of female terminals

Is there 0.1 V or less?

YES—Replace the yaw rate-lateral acceleration sensor (see page 19-234).■

NO—Repair open in the wire between the yaw rate-lateral acceleration sensor and body ground (G602).■

DTC Troubleshooting (cont'd)

DTC 86-81: F-CAN Communication with AHB Malfunction

1. Turn the ignition switch to ON (II).
2. Clear the DTC with the HDS.
3. Turn the ignition switch to LOCK (0), then turn it to ON (II) again.
4. Check for DTCs with the HDS.

   Is DTC 86-81 indicated?

   YES—If DTC 86-01 is indicated at the same time, do the DTC 86-01 troubleshooting first (see page 19-220). If DTC 86-01 is not indicated, go to step 5.

   NO—If any other DTCs are indicated, go to the indicated DTCs troubleshooting. If DTCs are not indicated, intermittent failure, the system is OK at this time. Check for loose terminals between the AHB servo unit 25P connector and the VSA modulator-control unit 37P connector. Refer to intermittent failures troubleshooting (see page 19-163).■

5. Turn the ignition switch to LOCK (0).
6. Disconnect the AHB servo unit 25P connector (see step 13 on page 19-101).
7. Disconnect the VSA modulator-control unit 37P connector (see step 2 on page 19-236).
8. Check for continuity between the VSA modulator-control unit 37P connector terminal and AHB servo unit 25P connector terminal (see table).

Sign	VSA Modulator-control Unit 37P Connector Terminal	AHB Servo Unit 25P Connector Terminal
CAN-L	No. 1	No. 17
CAN-H	No. 15	No. 1

VSA MODULATOR-CONTROL UNIT 37P CONNECTOR
Wire side of female terminals

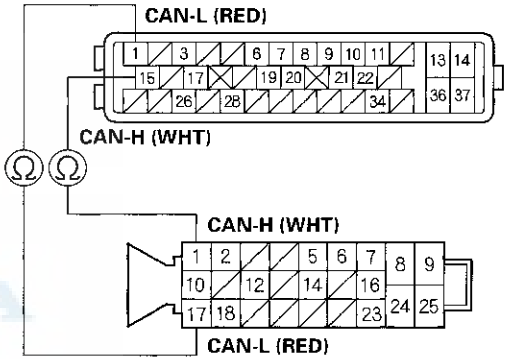

AHB SERVO UNIT 25P CONNECTOR
Wire side of female terminals

Is there continuity?

YES—Check for loose terminals in the AHB servo unit 25P connector. If necessary, substitute a known-good AHB servo unit, then go to step 1, and recheck. If no DTCs are indicated, replace the original AHB servo unit (see page 19-100). If DTC 86-81 resets, replace the VSA modulator-control unit (see page 19-236).

NO—Repair open in the wire between the AHB servo unit and the VSA modulator-control unit.■

DTC 107-22: Central Processing Unit (CPU) Internal Circuit Malfunction

1. Turn the ignition switch to LOCK (0) to cool the VSA modulator-control unit, and wait 1 hour or more.
2. Turn the ignition switch to ON (II).
3. Clear the DTC with the HDS.
4. Turn the ignition switch to LOCK (0), then turn it to ON (II) again.
5. Check for DTCs with the HDS.

   Is DTC 107-22 indicated?

   YES—Replace the VSA modulator-control unit (see page 19-236).■

   NO—The system is OK at this time.■

DTC 108-21: Steering Angle Sensor Malfunction

1. Turn the ignition switch to ON (II).
2. Clear the DTC with the HDS.
3. Test-drive the vehicle.

   NOTE: Drive the vehicle on the road, not on a lift.

4. Check for DTCs with the HDS.

   Is DTC 108-21 indicated?

   YES—Go to step 5.

   NO—Intermittent failure, the system is OK at this time.■

5. Turn the ignition switch to LOCK (0).
6. Substitute a known-good steering angle sensor (see page 19-233).
7. Turn the ignition switch to ON (II).
8. Clear the DTC with the HDS.
9. Test-drive the vehicle.

   NOTE: Drive the vehicle on the road, not on a lift.

10. Check for DTCs with the HDS.

    Is DTC 108-21 indicated?

    YES—Replace the VSA modulator-control unit (see page 19-236).■

    NO—Replace the original steering angle sensor (see page 19-233).■

DTC Troubleshooting (cont'd)

DTC 112-01: Central Processing Unit (CPU) Internal Circuit Malfunction

1. Turn the ignition switch to ON (II).
2. Clear the DTC with the HDS.
3. Turn the ignition switch to LOCK (0).
4. Disconnect the VSA modulator-control unit 37P connector (see step 2 on page 19-236).
5. Measure the voltage between VSA modulator-control unit 37P connector terminal No. 13 and body ground.

VSA MODULATOR-CONTROL UNIT 37P CONNECTOR

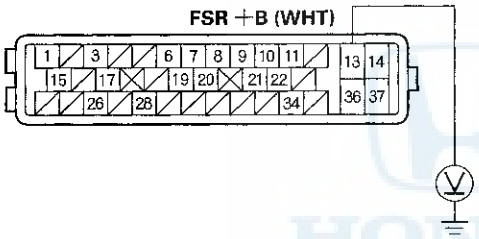

Wire side of female terminals

Is there battery voltage?

YES—Go to step 6.

NO—Check the 12V battery performance (see page 22-61), and troubleshoot the charging system indicator circuit (see page 12-179).■

6. Measure the voltage between VSA modulator-control unit 37P connector terminal No. 28 and body ground.

VSA MODULATOR-CONTROL UNIT 37P CONNECTOR

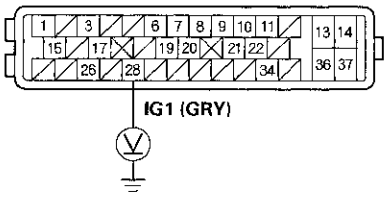

Wire side of female terminals

Is there 0 V?

YES—Go to step 7.

NO—Repair short to power in the wire between the No. 4 (7.5 A) fuse in the under-dash fuse-relay box and the VSA modulator-control unit.■

7. Turn the ignition switch to ON (II).
8. Measure the voltage between VSA modulator-control unit 37P connector terminal No. 28 and body ground.

VSA MODULATOR-CONTROL UNIT 37P CONNECTOR

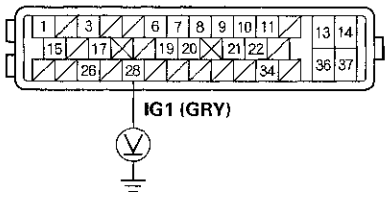

Wire side of female terminals

Is there battery voltage?

YES—Check for loose terminals in the VSA modulator-control unit 37P connector. If necessary, substitute a known-good VSA modulator-control unit (see page 19-236), and retest.■

NO—Repair open in the wire between the No. 4 (7.5 A) fuse in the under-dash fuse-relay box and the VSA modulator-control unit.■

DTC 121-xx*: VSA Solenoid Valve Malfunction

DTC 122-xx*: VSA Solenoid Valve Malfunction

DTC 123-xx*: VSA Solenoid Valve Malfunction

DTC 124-xx*: VSA Solenoid Valve Malfunction

*: Any two-character subcode (see table)

DTC		Sectional	Valve
121	-01	Right-front and left-rear	Regulator
	-02		
	-11		
	-21		
	-24		
122	-01		Suction
	-21		
	-22		
	-23		
123	-01	Left-front and right-rear	Regulator
	-02		
	-11		
	-21		
	-24		
124	-01		Suction
	-21		
	-22		
	-23		

1. Turn the ignition switch to ON (II).
2. Clear the DTC with the HDS.
3. Turn the ignition switch to LOCK (0), then turn it to ON (II) again.
4. Check for DTCs with the HDS.

   Is DTC 121-xx, 122-xx, 123-xx, or 124-xx indicated?

   YES—Replace the VSA modulator-control unit (see page 19-236). ■

   NO—Intermittent failure, the system is OK at this time. ■

Symptom Troubleshooting

VSA activation indicator does not go off, and no DTCs are stored

1. Turn the ignition switch to ON (II).

2. Check the VSA activation indicator for several seconds when the ignition switch is turned to ON (II).

   Does the indicator come on then go off?

   YES—The system is OK at this time.■

   NO—Go to step 3.

3. Turn the ignition switch to LOCK (0).

4. Disconnect the VSA OFF switch 5P connector.

5. Check the VSA OFF switch (see page 19-235).

   Is the VSA OFF switch OK?

   YES—Go to step 6.

   NO—Replace the VSA OFF switch (see page 19-235).■

6. Disconnect the gauge control module (tach) 36P connector.

7. Check for continuity between VSA OFF switch 5P connector terminal No. 2 and body ground.

VSA OFF SWITCH 5P CONNECTOR

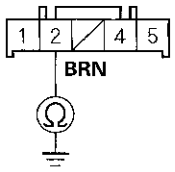

Wire side of female terminals

Is there continuity?

YES—Repair short to body ground in the wire between the gauge control module (tach) and the VSA OFF switch.■

NO—Substitute a known-good gauge control module (tach) (see page 22-255), then go to step 1 and recheck. If it is OK, replace the original gauge control module (tach) (see page 22-255).■

ABS indicator, brake system indicator, and VSA indicator do not go off

1. Turn the ignition switch to LOCK (0).

2. Check the No. 4 (7.5 A) fuse in the under-dash fuse/relay box.

   Is the fuse blown?

   YES—Go to step 3.

   NO—Reinstall the checked fuse, then go to step 9.

3. Disconnect the VSA modulator-control unit 37P connector (see step 2 on page 19-236).

4. Disconnect the yaw rate-lateral acceleration sensor 5P connector (see page 19-234).

5. Check for continuity between VSA modulator-control unit 37P connector terminal No. 28 and body ground.

VSA MODULATOR-CONTROL UNIT 37P CONNECTOR

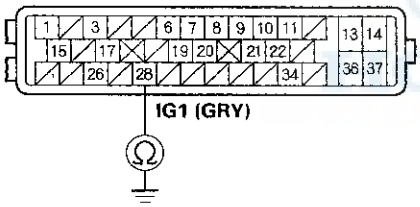

Wire side of female terminals

Is there continuity?

YES—Repair short to body ground in the wire between the No. 4 (7.5 A) fuse in the under-dash fuse/relay box and the VSA modulator-control unit or the yaw rate-lateral acceleration sensor. ■

NO—Install a new No. 4 (7.5 A) fuse in the under-dash fuse/relay box, then go to step 6.

6. Reconnect all connectors.

7. Turn the ignition switch to ON (II).

8. Check the ABS indicator, the brake system indicator and the VSA indicator for several seconds when the ignition switch is turned to ON (II).

   Do the indicators come on then go off?

   YES—Troubleshooting is complete. ■

   NO—Replace the VSA modulator-control unit (see page 19-236). ■

9. Disconnect the VSA modulator-control unit 37P connector (see step 2 on page 19-236).

10. Turn the ignition switch to ON (II).

11. Measure the voltage between VSA modulator-control unit 37P connector terminal No. 28 and body ground.

VSA MODULATOR-CONTROL UNIT 37P CONNECTOR

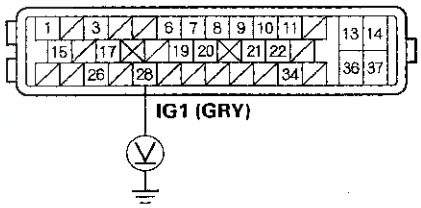

Wire side of female terminals

Is there battery voltage?

YES—Go to step 12.

NO—Repair open in the wire between the No. 4 (7.5 A) fuse in the under-dash fuse/relay box and the VSA modulator-control unit. ■

12. Turn the ignition switch to LOCK (0).

(cont'd)

Symptom Troubleshooting (cont'd)

13. Check for continuity between VSA modulator-control unit 37P connector terminal No. 36 and body ground.

VSA MODULATOR-CONTROL UNIT 37P CONNECTOR

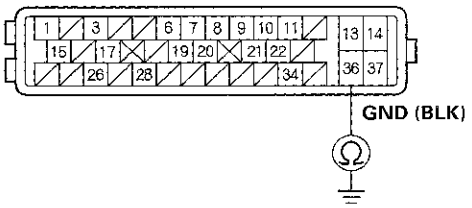

Wire side of female terminals

Is there continuity?

YES—Go to step 14.

NO—Repair open in the wire between the VSA modulator-control unit and body ground (G202). ■

14. Measure the voltage between VSA modulator-control unit 37P connector terminal No. 13 and body ground.

VSA MODULATOR-CONTROL UNIT 37P CONNECTOR

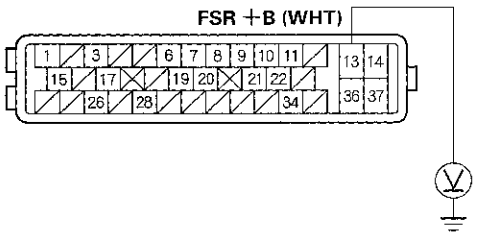

Wire side of female terminals

Is there battery voltage?

YES—Go to step 15.

NO—Repair open in the wire between the No. 3 (40 A) fuse in the under-hood fuse/relay box and the VSA modulator-control unit. ■

15. Disconnect the gauge control module (tach) 36P connector.

16. Check for continuity between the VSA modulator-control unit 37P connector terminal and gauge control module (tach) 36P connector terminal (see table).

Sign	VSA Modulator-control Unit 37P Connector Terminal	Gauge Control Module (Tach) 36P Connector Terminal
CAN-L	No. 1	No. 19
CAN-H	No. 15	No. 1

VSA MODULATOR-CONTROL UNIT 37P CONNECTOR
Wire side of female terminals

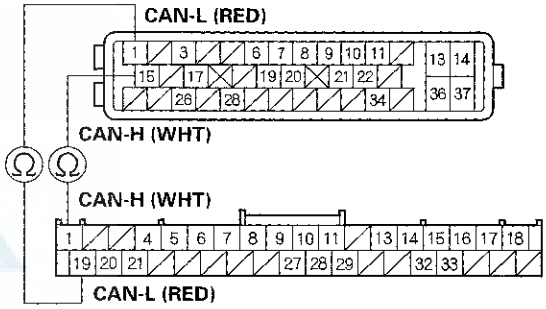

GAUGE CONTROL MODULE (TACH) 36P CONNECTOR
Wire side of female terminals

Is there continuity?

YES—Check for loose terminals in the VSA modulator-control unit 37P connector. If necessary, substitute a known-good VSA modulator-control unit (see page 19-236), and retest. ■

NO—Repair open in the wire between the gauge control module (tach) and the VSA modulator-control unit. ■

Steering Angle Sensor Replacement

NOTE: Do not damage or drop the combination switch as the steering angle sensor is sensitive to shock and vibration.

1. With the wheels in the straight-ahead position and the steering wheel centered, remove the steering wheel (see page 17-6).

2. Remove the steering column covers and the cable reel (see page 24-196).

3. Remove the combination switch assembly (see page 17-11).

4. Remove the combination light switch (A) and the wiper/washer switch (B) from the combination switch body assembly (C).

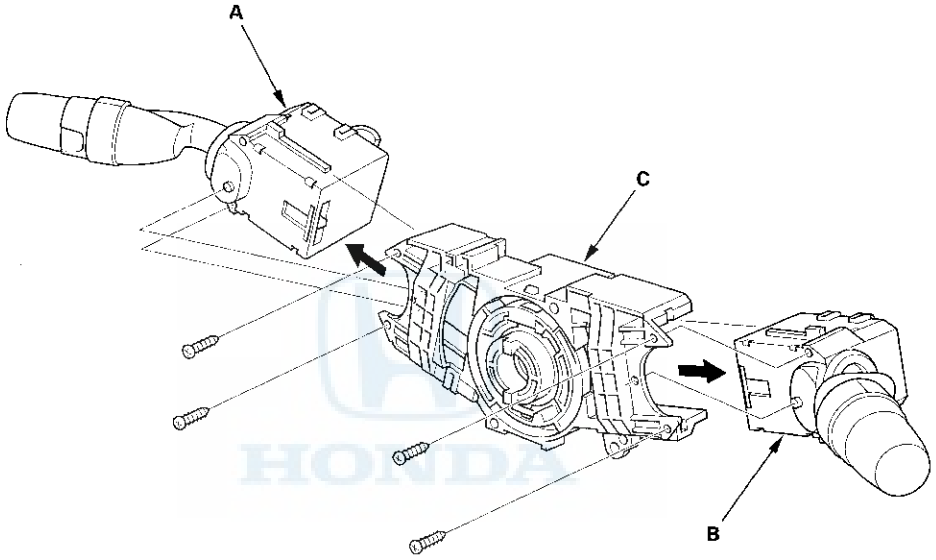

5. Install the combination switch body assembly in the reverse order of removal.

   NOTE:
   - Do not remove the steering angle sensor from the combination switch body.
   - When installing the cable reel, set the turn signal canceling sleeve position so that the arrow points straight up (see page 24-197).
   - When installing the combination switch, tighten the mounting screws to the specified torque and sequence shown (see page 17-13).

Yaw Rate-Lateral Acceleration Sensor Replacement

NOTE:
- Do not damage or drop the sensor as it is sensitive.
- Do not use power tools.

1. Turn the ignition switch to LOCK (0).
2. Remove the center console (see page 20-79).
3. Remove the yaw rate-lateral acceleration sensor (A) mounting bolts.

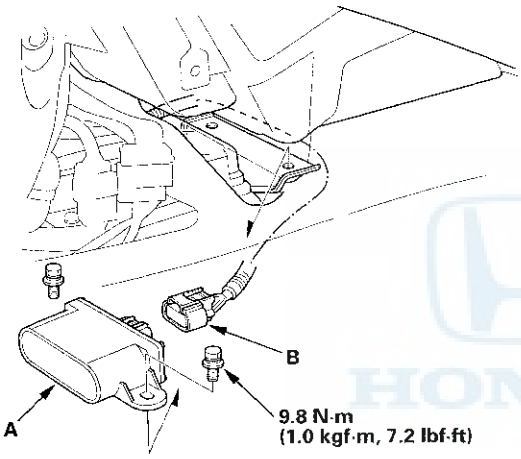

4. Pull out the yaw rate-lateral acceleration sensor, then disconnect the sensor connector (B).
5. Install the yaw rate-lateral acceleration sensor in the reverse order of removal.
6. Do the VSA sensor neutral position memorization (see page 19-234).

VSA Sensor Neutral Position Memorization

NOTE: Do not press the brake pedal during this procedure.

1. Park the vehicle on a flat and level surface, with the steering wheel in the straight ahead position.
2. With the ignition switch at to LOCK (0), connect the HDS to the data link connector (DLC) (A) under the driver's side of the dashboard.

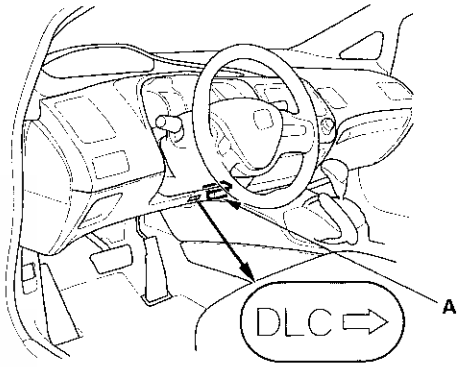

3. Turn the ignition switch to ON (II).
4. Make sure the HDS communicates with the vehicle and the VSA modulator-control unit. If it doesn't troubleshoot the DLC circuit (see page 11-213).
5. Select VSA ADJUSTMENT with the HDS, and follow the screen prompts.

   NOTE: See the HDS Help menu for specific instructions.
6. Turn the ignition switch to LOCK (0).

VSA OFF Switch Test

1. Turn the ignition switch to LOCK (0).
2. Remove the driver's dashboard lower cover (see page 20-89).
3. Push out the VSA OFF switch (A) from the back of the instrument panel.

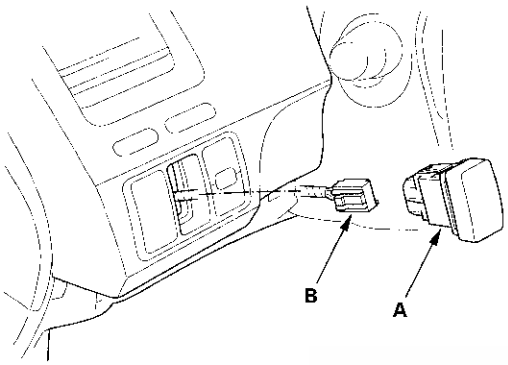

4. Disconnect the VSA OFF switch 5P connector (B).
5. Check for continuity between VSA OFF switch 5P connector terminals No. 1 and No. 2. There should be continuity when the button is pressed, and no continuity when the button is released.

VSA OFF SWITCH 5P CONNECTOR

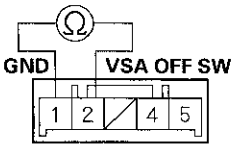

Terminal side of male terminals

6. Check for continuity between VSA OFF switch 5P connector terminals No. 4 and No. 5. There should be continuity at all times.

VSA OFF SWITCH 5P CONNECTOR

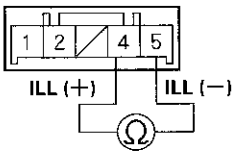

Terminal side of male terminals

7. Install the VSA OFF switch in the reverse order of removal.

VSA Modulator-Control Unit Removal and Installation

NOTE:
- Do not spill brake fluid on the vehicle; it may damage the paint; if brake fluid gets on the paint, wash it off immediately with water.
- Be careful not to damage or deform the brake lines during removal and installation.
- Plug the ends of the hoses and the joints to prevent spilling brake fluid.

Removal

1. Turn the ignition switch to LOCK (0).

2. Disconnect the VSA modulator-control unit 37P connector (A) by pushing the lock (B) and pulling down the lever (C); the connector disconnects itself.

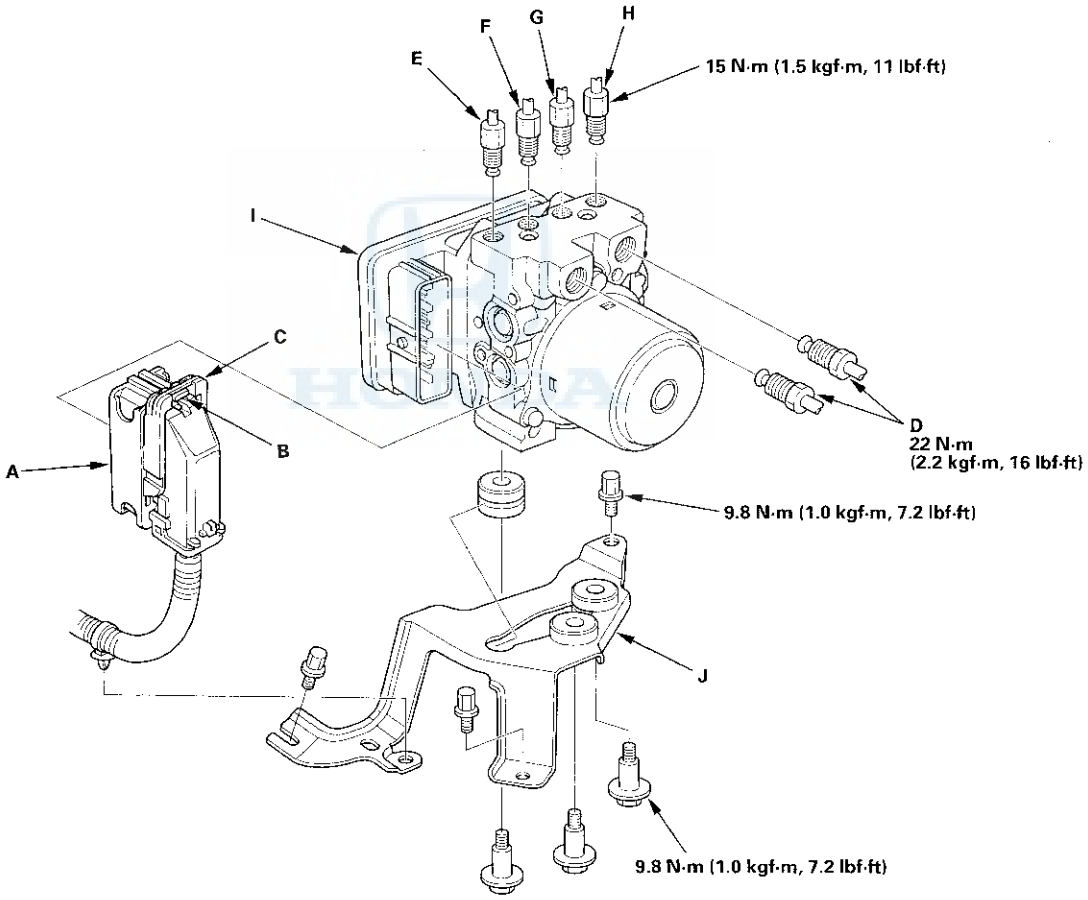

3. Disconnect the six brake lines from the VSA modulator-control unit.

   NOTE: Brake lines are connected to the master cylinder (D) and to the right-front (E), the left-rear (F), the right-rear (G), and the left-front (H) brake systems.

4. Remove the VSA modulator-control unit (I) with the bracket (J) from the body.

5. Remove the VSA modulator-control unit from the bracket.

Installation

1. Install the VSA modulator-control unit onto the bracket.
2. Install the bracket with the VSA modulator-control unit to the body.
3. Reconnect the six brake lines, then tighten the flare nuts to the specified torque.
4. Align the connecting surface of the VSA modulator-control unit 37P connector to the VSA modulator-control unit.
5. Pull up the lever of the VSA modulator-control unit 37P connector, then confirm the connector is fully seated.
6. Bleed the brake system (except the AHB servo unit and power unit) (see page 19-97).
7. Do the VSA sensor neutral position memorization (see page 19-234).
8. Start the engine, and make sure the ABS and the VSA indicators go off.
9. Test-drive the vehicle, and make sure the ABS and the VSA indicators do not come on.

   NOTE: If the brake pedal is spongy, there may be air trapped in the modulator which could then be induced into the normal brake system during modulation. Bleed the brake system (except the AHB servo unit and power unit) again (see page 19-97).

HONDA

Wheel Speed Sensor Replacement

Special Tools Required
Guide pin tool 07AAG-SVBA100

Front

1. Turn the ignition switch to LOCK (0).

2. Release the connector clamp (A), then disconnect the wheel speed sensor connector (B).

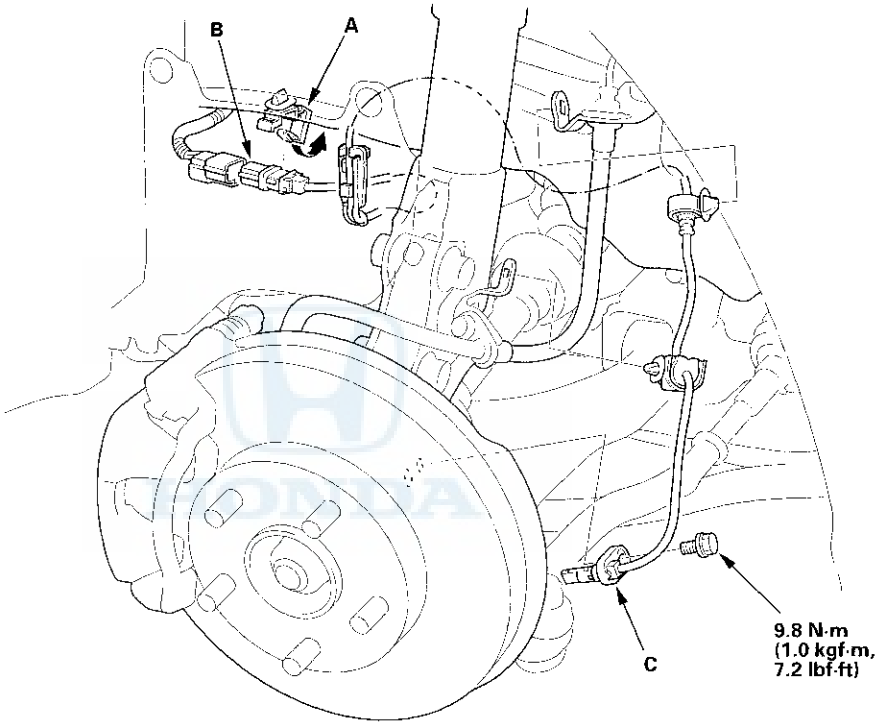

3. Remove the clips, the bolt, and the wheel speed sensor (C).

4. Install the wheel speed sensor in the reverse order of removal, and note these items:

   - Install the sensor carefully to avoid twisting the wires.
   - If the wheel speed sensor comes in contact with the wheel bearing. Investigate the cause before replacing the wheel speed sensor.

5. Start the engine, and make sure the ABS and VSA indicators go off.

6. Test-drive the vehicle, and make sure the ABS and VSA indicators do not come on.

Rear

1. Turn the ignition switch to LOCK (0).
2. Release the clamp (A), then disconnect the wheel speed sensor connector (B).

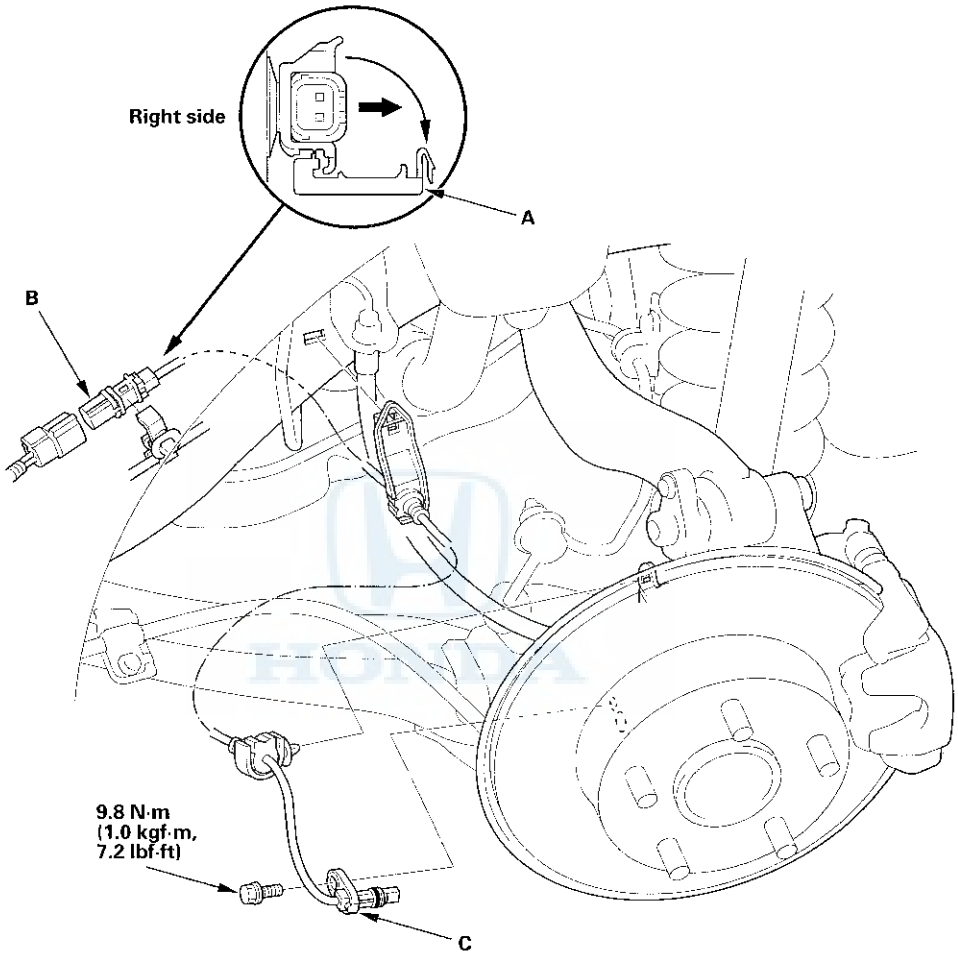

3. Remove the clips, the bolt, and the wheel speed sensor (C).

(cont'd)

Wheel Speed Sensor Replacement (cont'd)

4. Apply multi-purpose grease to the wheel speed sensor O-ring (A) and the sensor hole (B) in the knuckle.

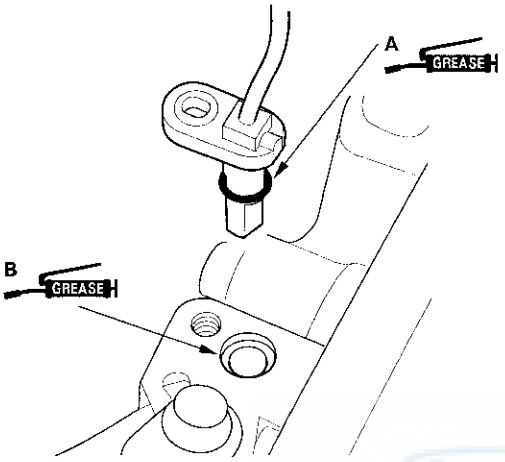

5. Insert the guide pin tool (A) into the wheel speed sensor bolt hole until the shoulder of the tool contacts the wheel speed sensor bracket.

   NOTE: To prevent O-ring damage, the wheel speed sensor must be installed with the guide pin tool.

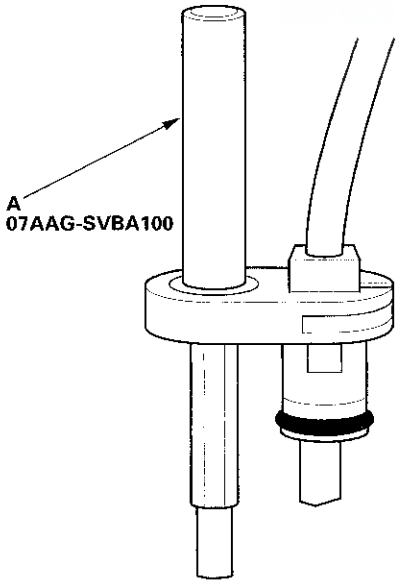

6. Insert the wheel speed sensor (A) and the guide pin tool (B) into the bolt hole on the knuckle.

   NOTE: To ensure proper alignment when pushing the wheel speed sensor into the knuckle housing, do not hold the sensor bracket during installation, hold the sensor wire.

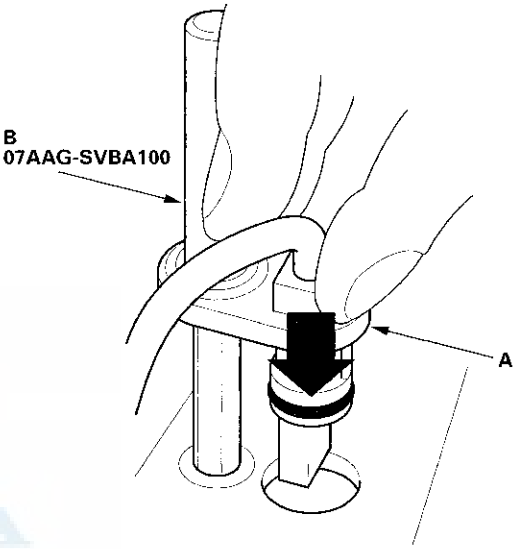

7. Gently push and pull the wheel speed sensor in and out to make sure the O-ring is sliding properly in its housing. While you are doing this, make sure the sensor doesn't come out of the knuckle assembly. If the sliding effort is too high, remove the wheel speed sensor, inspect the O-ring for damage, and start the installation process again.

8. Remove the guide pin tool, then install the bolt, and tighten it to specified torque.

9. Clean the mating surfaces between the brake disc and the inside of the wheel, then install the rear wheel.

10. Start the engine, and make sure the ABS and the VSA indicators go off.

11. Test-drive the vehicle, and make sure the ABS and the VSA indicators do not come on.

SUPPLEMENTAL RESTRAINT SYSTEM (SRS) (If body maintenance is required)

The Civic Hybrid SRS includes a driver's airbag in the steering wheel hub, a passenger's airbag in the dashboard above the glove box, seat belt tensioners in the front seat belt retractors, seat belt buckle tensioners in the front seat belt buckles, side curtain airbags in the sides of the roof, and side airbags in the front seat-backs. Information necessary to safely service the SRS is included in this Service Manual. Items marked with an asterisk (*) on the contents page include or are located near SRS components. Servicing, disassembling, or replacing these items requires special precautions and tools, and should be done by an authorized Honda dealer.

- To avoid rendering the SRS inoperative, which could lead to personal injury or death in the event of a severe frontal or side collision, all SRS service work should be done by an authorized Honda dealer.
- Improper service procedures, including incorrect removal and installation of the SRS, could lead to personal injury caused by unintentional deployment of the airbags, side airbags, and/or side curtain airbags.
- Do not bump or impact the SRS unit, front impact sensors, side impact sensors, or rear safing sensor when the ignition switch is in ON (II), or for at least 3 minutes after the ignition switch is turned to LOCK (0); otherwise, the system may fail in a collision, or the airbags may deploy.
- SRS electrical connectors are identified by yellow color coding. Related components are located in the steering column, front console, dashboard, dashboard lower panel, in the dashboard above the glove box, in the front seats, in the roof side, and around the floor. Do not use electrical test equipment on these circuits.

INTEGRATED MOTOR ASSIST (IMA) SYSTEM (If body maintenance is required)

IMA components are located in this area. The IMA is a high-voltage system. The high voltage cables and their covers are identified by orange coloring. The safety labels are attached to high voltage and other related parts (see page 1-7). You must be familiar with the IMA system before working around it. Make sure you have read the Service Precautions in the IMA section before performing repairs or service (see page 12-3).

Body

Special Tools 20-2

Doors
Component Location Index - Front Door 20-3
Component Location Index - Rear Door 20-5
Front Door Panel Removal/Installation 20-7
Front Door Outer Handle Replacement 20-9
Front Door Latch Replacement 20-12
Front Door Glass and Regulator Replacement 20-14
Front Door Glass Outer Weatherstrip Replacement 20-15
Front Door Weatherstrip Replacement 20-16
Rear Door Panel Removal/Installation 20-17
Rear Door Outer Handle Replacement 20-19
Rear Door Latch Replacement 20-21
Rear Door Glass and Regulator Replacement 20-23
Rear Door Glass Outer Weatherstrip Replacement 20-26
Rear Door Weatherstrip Replacement 20-27
Front and Rear Door Glass Adjustment 20-28
Front and Rear Door Position Adjustment 20-29
Front and Rear Door Striker Adjustment 20-31

Mirrors
Component Location Index 20-32
Power Mirror Replacement 20-33
Mirror Holder Replacement 20-34
Rearview Mirror Replacement 20-35

Glass
Component Location Index 20-36
Windshield Replacement 20-38
Front Corner Glass Replacement 20-43
Rear Window Replacement 20-47

Interior Trim
Component Location Index 20-53
Trim Removal/Installation - Door Areas 20-54
* Trim Removal/Installation - Pillar Areas 20-57
* Trim Removal/Installation - Rear Shelf Area 20-66
Trim Removal/Installation - Trunk Area 20-68
Trim Removal/Installation - Trunk Lid 20-69
Grab Handle Removal/Installation 20-70
* Headliner Removal/Installation 20-71
* Carpet Replacement 20-75

Consoles
* Center Console Removal/Installation 20-79
Center Console Disassembly/Reassembly 20-81
Center Console Armrest Replacement 20-82
Armrest Lock Replacement 20-83

Dashboard
Instrument Panel Removal/Installation 20-85
Gauge Control Module (Speedo) Trim Removal/Installation 20-86
Subdisplay Visor Removal/Installation 20-87
Driver's Dashboard Lower Cover Removal/Installation 20-89
Driver's Dashboard Undercover Removal/Installation 20-90
Center Pocket Removal/Installation 20-90
Passenger's Dashboard Undercover Removal/Installation 20-91
* Glove Box Removal/Installation 20-91
Dashboard Vent Removal/Installation 20-92
* Glove Box Striker Replacement 20-94
Dashboard Side Trim Removal/Installation 20-94
Side Defogger Vent Trim Removal/Installation 20-95
* Dashboard/Steering Hanger Beam Removal/Installation 20-95
Dashboard/Steering Hanger Beam Disassembly/Reassembly 20-101

Seats
Component Location Index 20-103
Front Seat Active Head Restraint Inspection 20-104
* Front Seat Removal/Installation 20-105
Front Seat Frame Replacement 20-107
* Front Seat-back Cover Replacement 20-110
* Front Seat Cushion Cover Replacement 20-114
Rear Seat Removal/Installation 20-118
Rear Seat-back Cover Replacement 20-119
Rear Seat Cushion Cover Replacement 20-121

Bumpers
Front Bumper Removal/Installation 20-122
Front Bumper Lower Grille Replacement 20-124
Front Air Spoiler Replacement 20-125
Front Bumper Air Deflector Replacement 20-126
Rear Bumper Removal/Installation 20-127

Hood
Hood Adjustment 20-129
Hood Seal Replacement 20-130
Hood Insulator Replacement 20-131

Trunk Lid
Trunk Lid Adjustment 20-132
Trunk Lid Torsion Bar Replacement 20-133
Trunk Lid Weatherstrip Replacement 20-134
Trunk Lid Cushion Replacement 20-134

Fuel Fill Door
Fuel Fill Door Adjustment 20-135
Fuel Cap Adapter Replacement 20-136

Exterior Trim

Front Grille Replacement 20-137
Front Fender Trim Replacement 20-138
Front Grille Cover Replacement 20-139
Cowl Cover Replacement 20-140
Roof Molding Replacement 20-141
Door Molding Replacement 20-143
Side Sill Protection Tape Replacement 20-144
Rear License Trim Replacement 20-144
Trunk Lid Spoiler Replacement 20-145
Emblem/Sticker Replacement 20-146

Fenderwell

Front Inner Fender Replacement 20-147
Splash Shield Replacement 20-148
Front Fender Fairing Replacement 20-149
Front Undercover Replacement 20-150
Front Floor Undercover Replacement 20-150
Middle Floor Undercover Replacement 20-151
Rear Floor Undercover Replacement 20-151
Fuel Pipe Protector Replacement 20-152
Rear Fender Cover Replacement 20-152
Rear Strake Replacement 20-153
Rear Air Outlet Replacement 20-153

Openers

Component Location Index 20-154
Hood Opener Cable Replacement 20-155
* Trunk Lid Opener Cable/Fuel Fill Door Opener Cable Replacement 20-156
Hood Latch Replacement 20-158
Trunk Lid Opener/Fuel Fill Door Opener Replacement 20-159
Trunk Lid Lock Cylinder Replacement 20-161
Trunk Lid Latch Replacement 20-162

Frame

Upper Dashboard Support Gusset Replacement 20-164
Rear Floor Upper Cross-member Gusset Replacement 20-164
Rear Floor Brace Replacement 20-165
Subframe Replacement 20-166
Frame Repair Chart 20-168

Special Tools

Ref. No.	Tool Number	Description	Qty
①	07AAF-SNAA100	Torsion Bar Assembly Tool	1

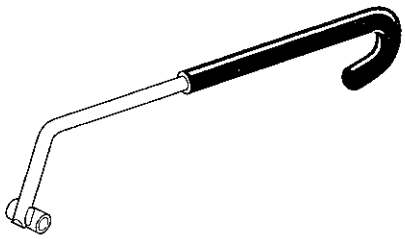

①

Component Location Index - Front Door

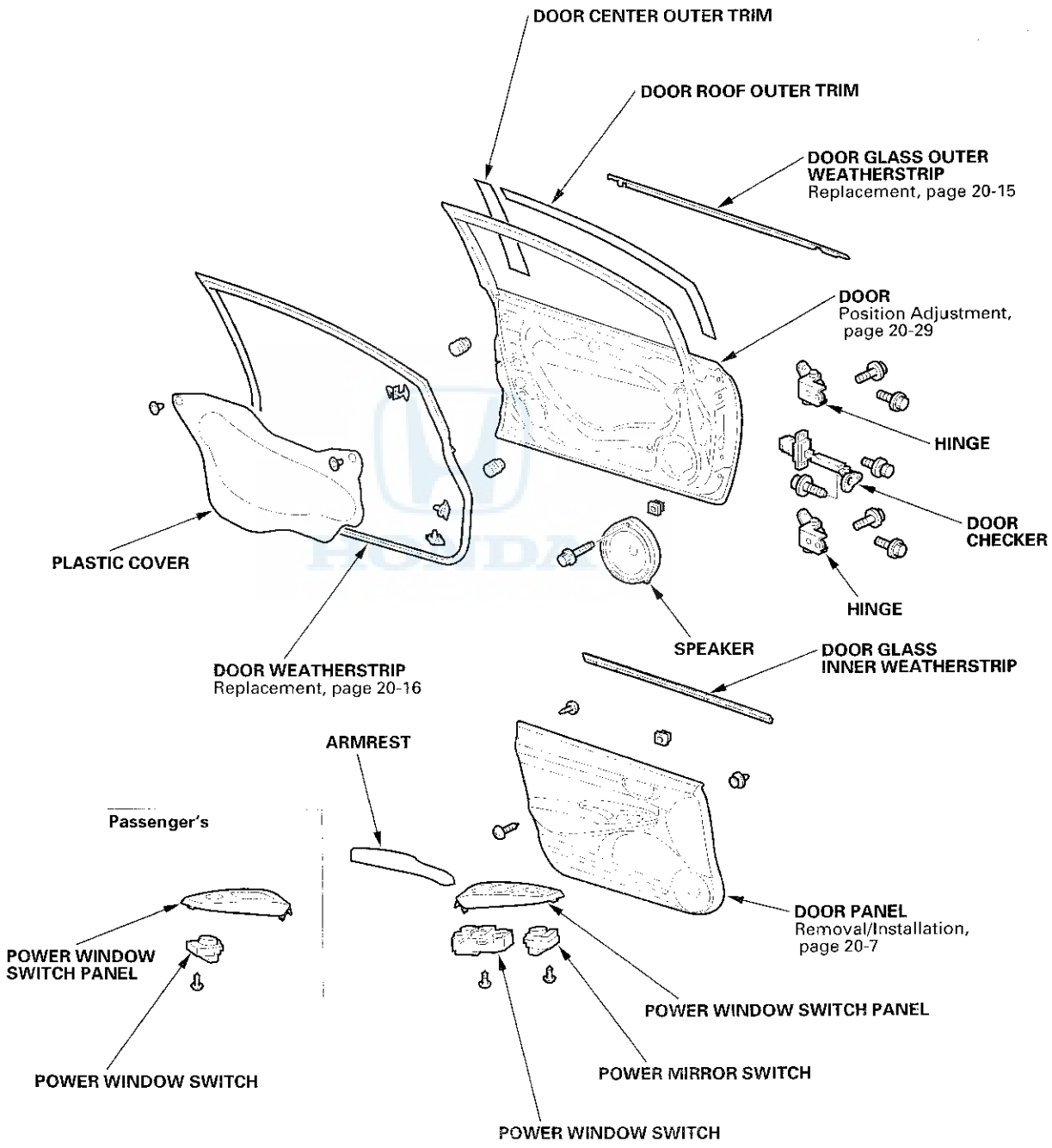

(cont'd)

Component Location Index - Front Door (cont'd)

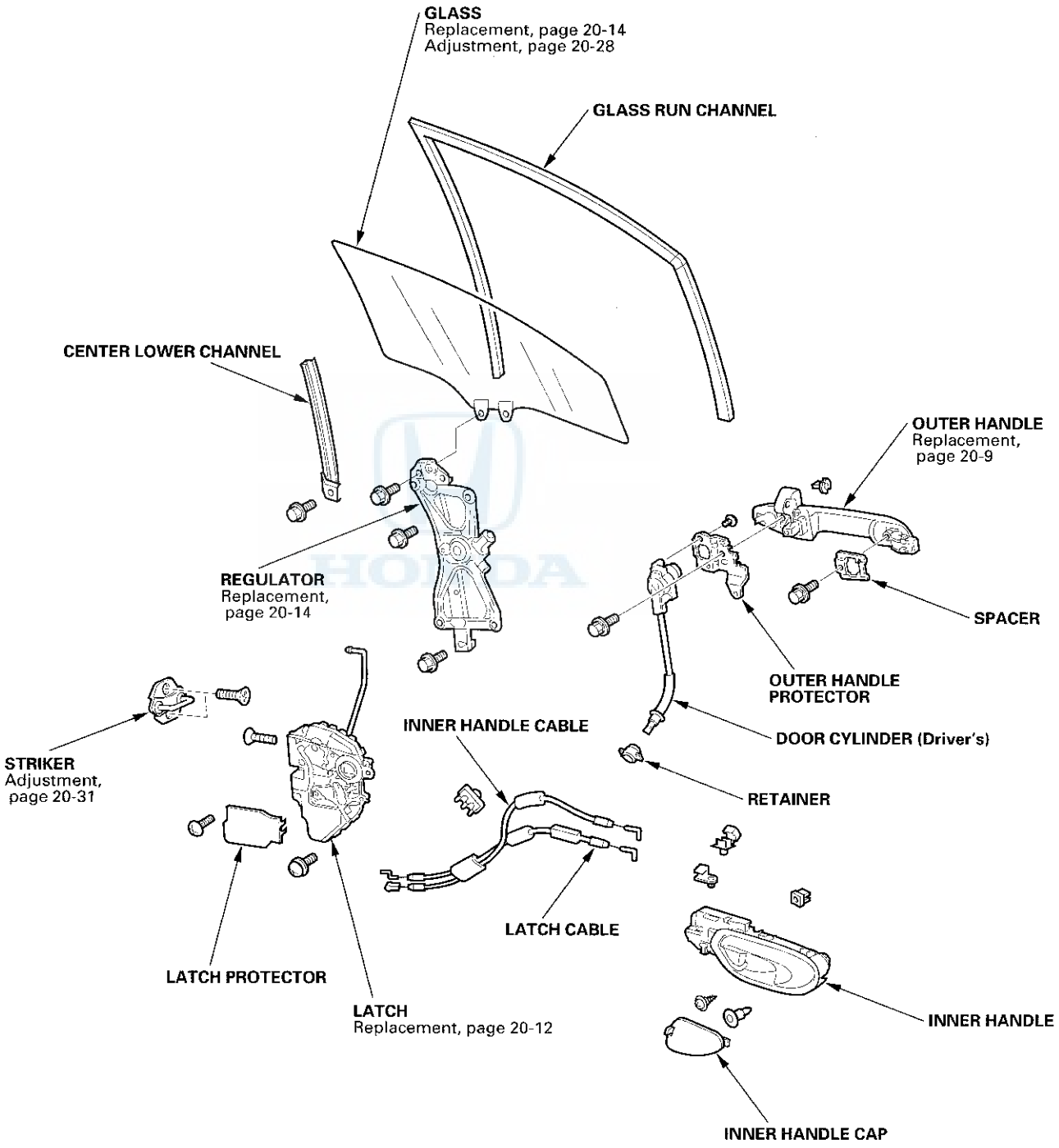

Component Location Index - Rear Door

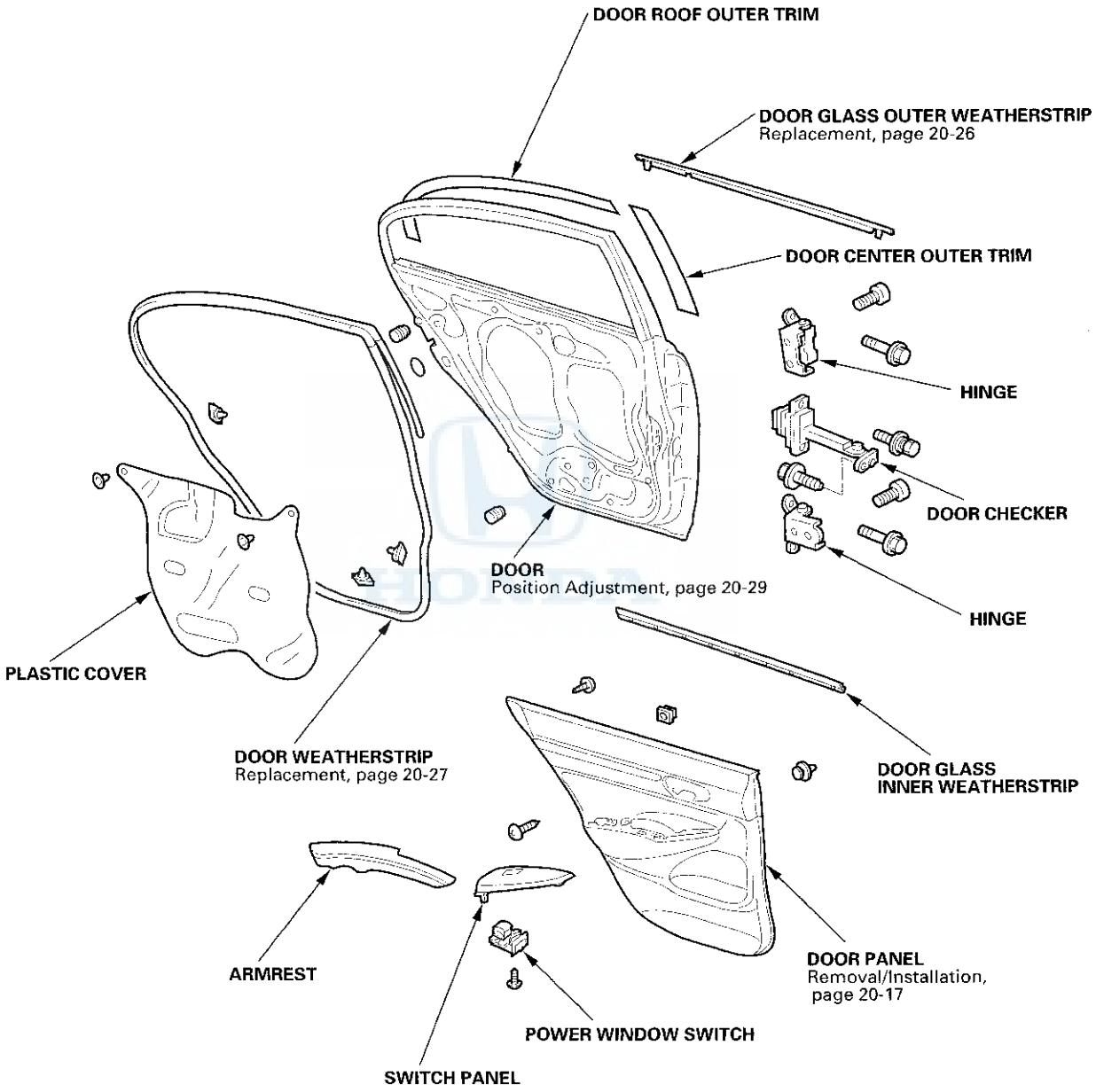

(cont'd)

Component Location Index - Rear Door (cont'd)

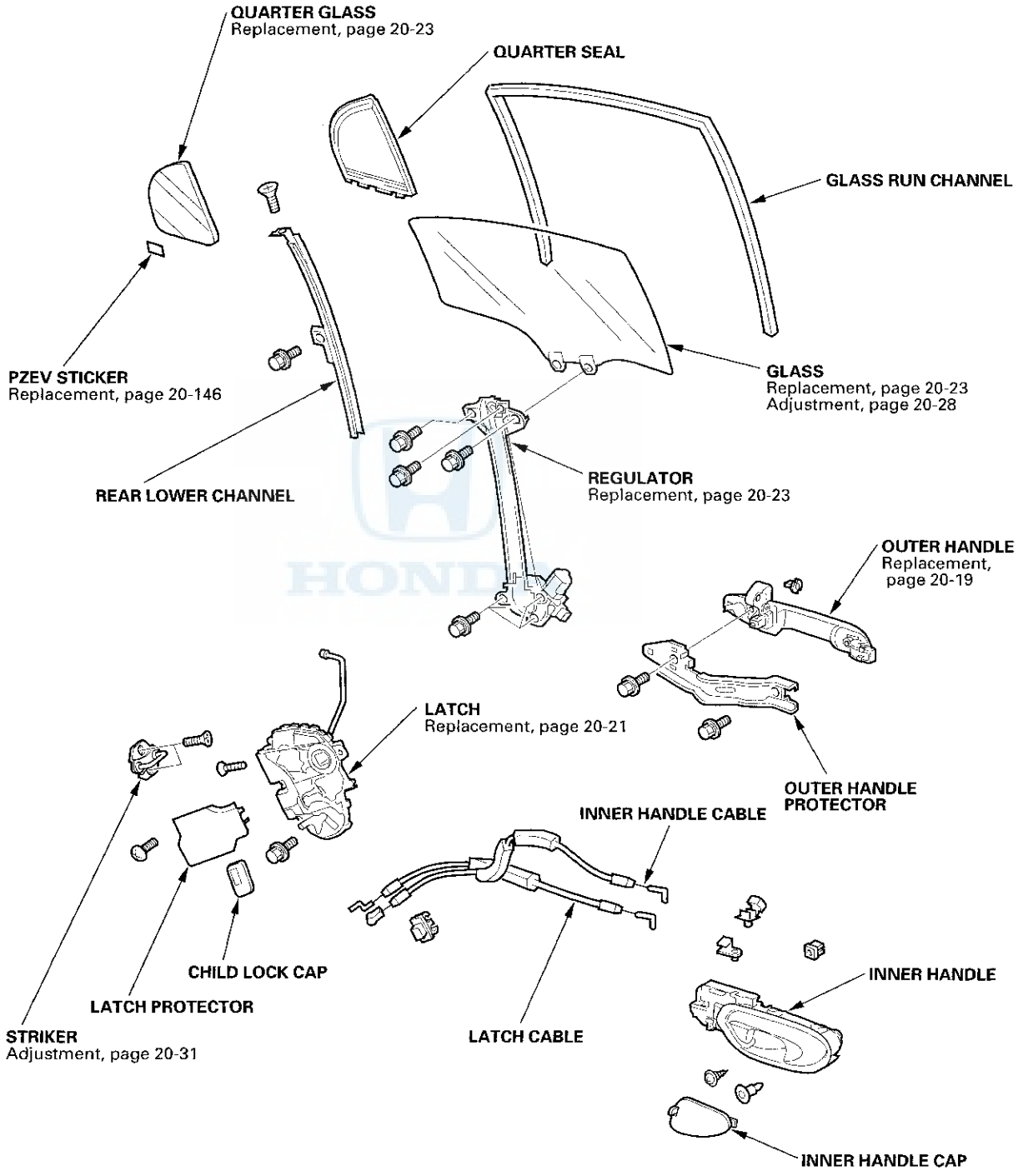

Front Door Panel Removal/Installation

Special Tools Required
- KTC trim tool set SOJATP2014 *
- Trim pad remover, Snap-on A 177A or equivalent, commercially available

* Available through the Honda Tool and Equipment Program; call 888-424-6857

NOTE: Use the appropriate tool from the KTC trim tool set to avoid damage when removing components.

1. Raise the glass fully.

2. Pry out on the rear portion of the inner handle cap (A) to release the hooks (B, C) with the appropriate trim tool.

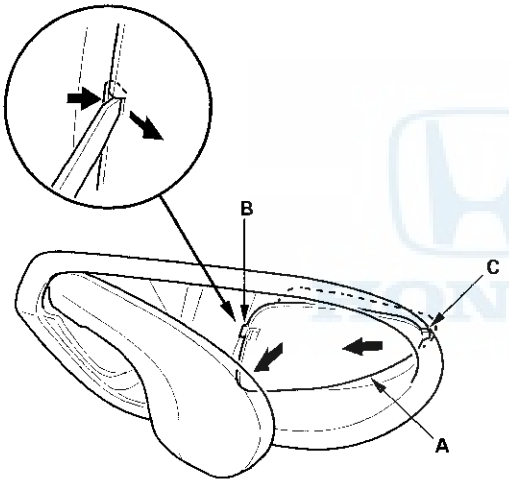

3. Remove the screw and clip securing the inner handle (A).

Fastener Locations

▶ : Screw, 1 ▷ : Clip, 1

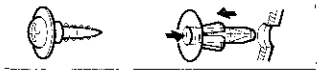

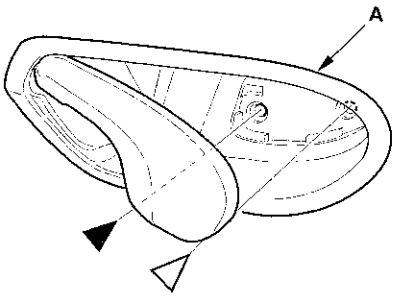

4. Remove the power window switch panel (A).

   -1 Pry up on the rear edge of the switch panel with the appropriate trim tool to release the rear clip.
   -2 Pull out along the edge of the panel to release all of the hooks (B).
   -3 Pull the switch panel rearward to release the front hook (C).
   -4 Disconnect the power mirror switch connector (D) (driver's) and the power window switch connector (E).

Fastener Location

▷ : Clip, 1

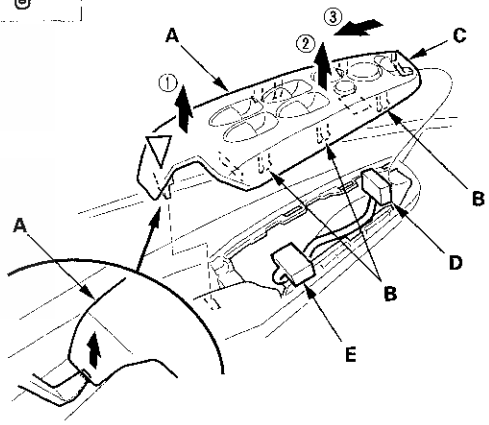

5. Remove the screw.

Fastener Location

▶ : Screw, 1

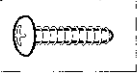

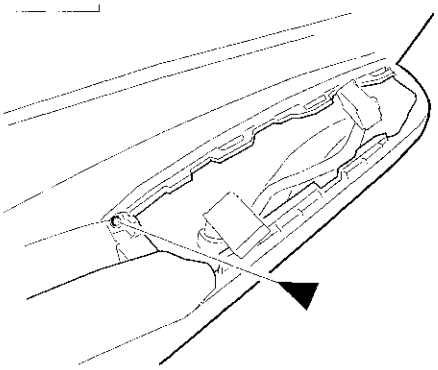

(cont'd)

Front Door Panel Removal/Installation (cont'd)

6. Remove the door panel (A) with as little bending as possible to avoid creasing or breaking it.

   -1 Start at the bottom edge of the door panel, release the clips (B, C) that are just above the marks (D) on the edge of the panel with a commercially available trim pad remover.
   -2 Detach the upper clips.
   -3 Starting at the rear, pull the door panel upward.

   NOTE: The inner handle cable (E) and the latch cable (F) are connected to the inner handle (G). Do not pull the door panel up too far, or these cables will be damaged.

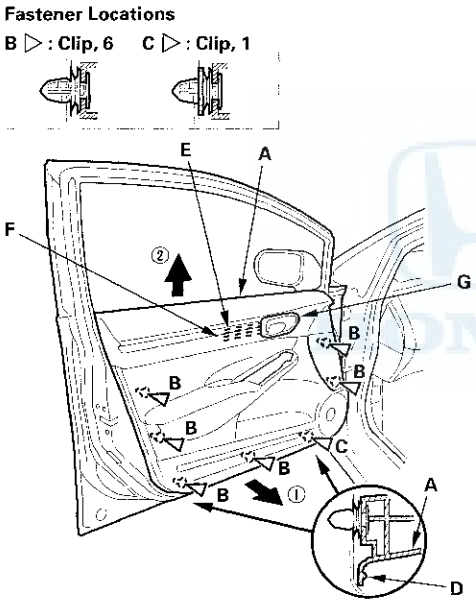

7. While holding the door panel (A) away from the door, remove the inner handle (B) from the door panel by releasing the hooks (C).

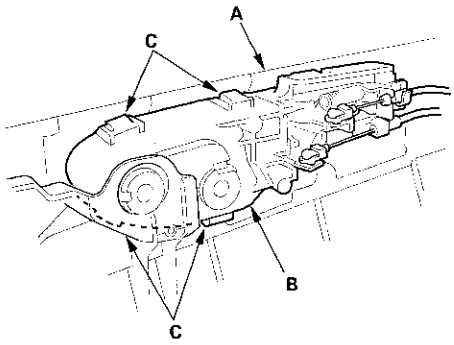

8. Remove the door panel (A) while pulling the inner handle (B) out through the hole in the door panel.

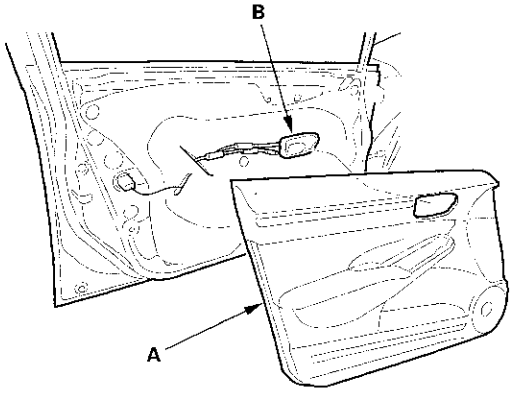

9. If necessary, disconnect the inner handle cable (A) and the latch cable (B) from the inner handle (C), then remove the handle.

   -1 Detach the inner handle cable fastener (D), then disconnect the inner handle cable from the cable fastener (E).
   -2 Detach the latch cable fastener (F) with a flat-tip screwdriver, then disconnect the latch cable from the cable fastener (G).

   NOTE: If the cable fasteners are damaged or stress-whitened, replace them with new ones.

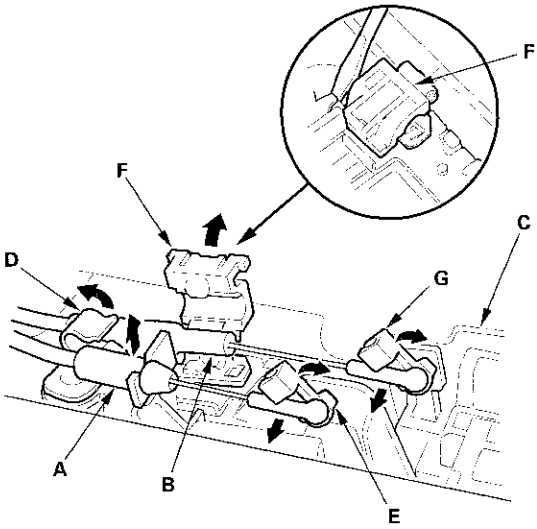

10. Install the door panel in the reverse order of removal, and note these items:

- If the clips are damaged or stress-whitened, replace them with new ones.
- Replace any damaged cable fasteners with new ones.
- The latch cable (A) should be fixed to the cable fastener (B) with the latch in lock position as shown.
- Make sure the connectors are plugged in properly, and the cables are connected securely.
- Make sure the window and the power door lock operate properly.
- When reinstalling the door panel, make sure the plastic cover is installed properly and sealed around its outside perimeter to seal out water.

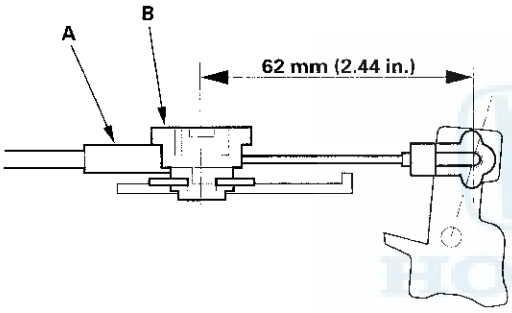

Front Door Outer Handle Replacement

NOTE: Put on gloves to protect your hands.

1. Raise the glass fully.
2. Remove the door panel (see page 20-7).
3. Disconnect the power door lock actuator connector (A).

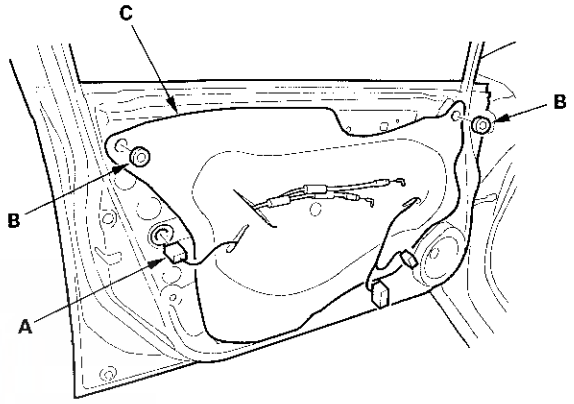

4. Remove the plug caps (B), then remove the plastic cover (C), as needed.
5. Detach the rod fastener (A).

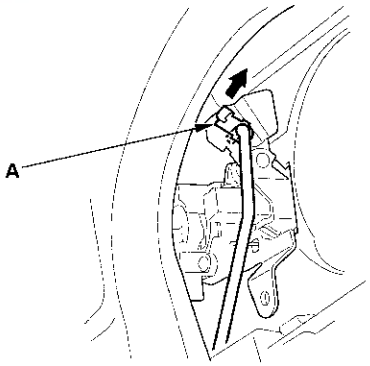

(cont'd)

Front Door Outer Handle Replacement (cont'd)

6. Remove the maintenance cap (A). Disconnect the outer handle rod (B) with a clip remover.

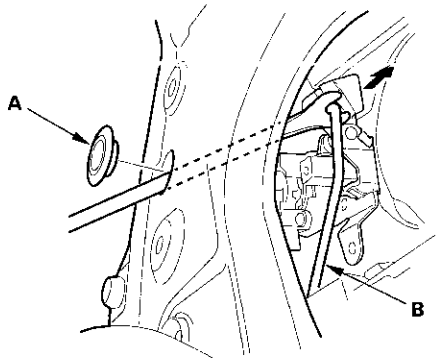

7. Driver's side: Pull both side flanges (A) of the retainer (B) outward, and pull the middle flange portion (C) of the outer casing cover (D) out, then disconnect the cylinder cable (E) from the latch.

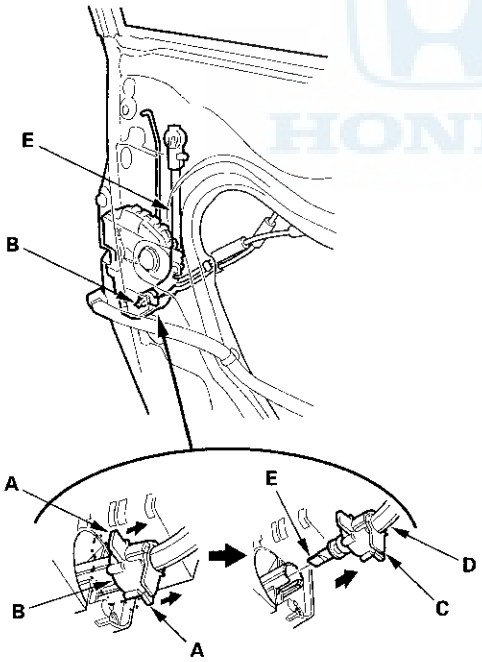

8. Remove the bolt, then remove the spacer (A).

Fastener Location

▶ : Bolt, 1

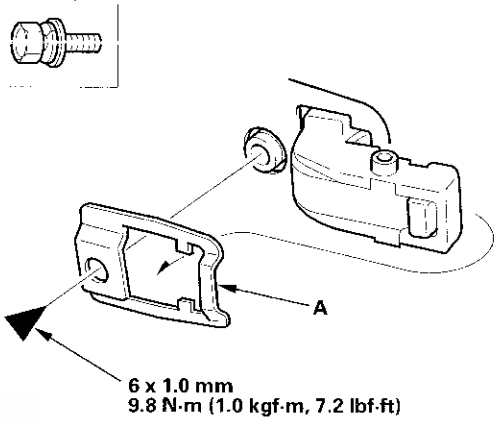

9. Remove the bolt securing the outer handle protector (A), then remove the protector by releasing the hook (B).

Fastener Location

▶ : Bolt, 1

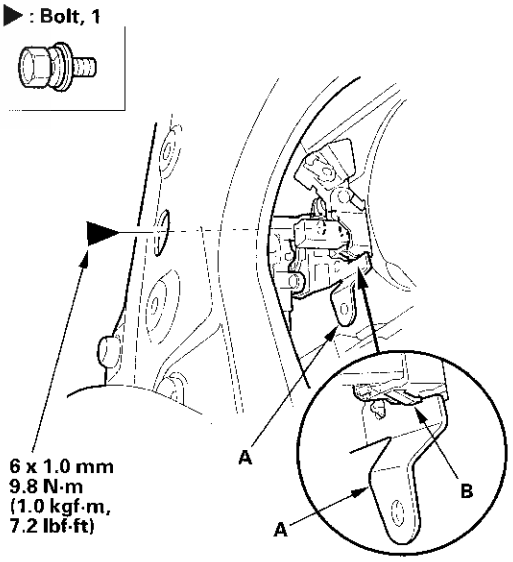

10. If necessary, remove the special screws, then separate the door cylinder (A) and the outer handle protector (B). If the retainer (C) is damaged, release the hooks (D), and replace it.

NOTE: If removed, the special screws (P/N 90101-SJK-003) must be replaced.

Fastener Locations

▶ : Screw, 2

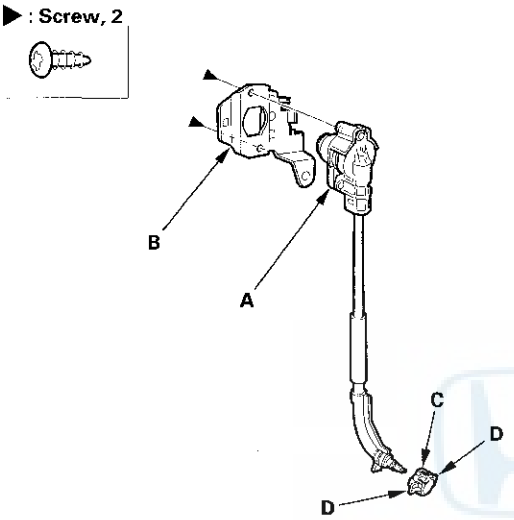

11. While pulling the outer handle (A), remove the handle from the holes in the door panel. Take care not to scratch the door.

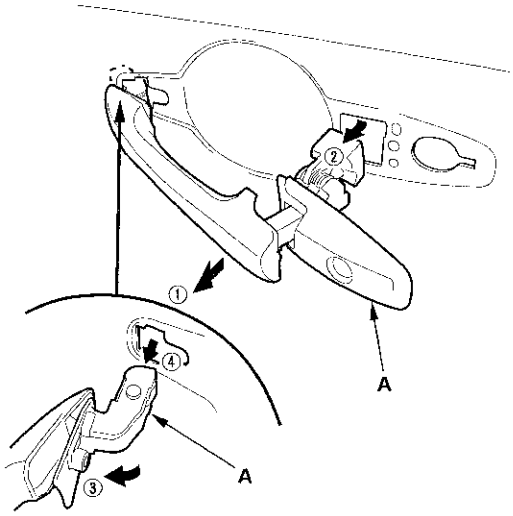

12. Remove the rod fastener (A) from the outer handle (B), then replace it with a new one.

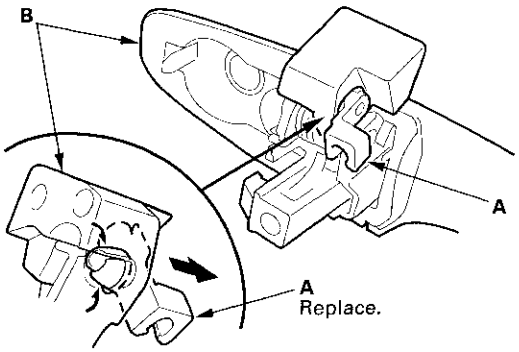

13. Install the handle in the reverse order of removal, and note these items:

- Make sure the cylinder cable and each rod is connected securely.
- Make sure the door key cylinder/door locks operate properly.
- Make sure the door handle works properly.
- When reinstalling the door panel, make sure the plastic cover is installed properly and sealed around its outside perimeter to seal out water.
- Check for water leaks (see step 9 on page 20-29).

Front Door Latch Replacement

NOTE: Put on gloves to protect your hands.

1. Raise the glass fully.
2. Remove the door panel and the inner handle (see page 20-7).
3. Remove the plastic cover, as needed (see step 3 on page 20-9).
4. Detach the rod fastener (see step 5 on page 20-9).
5. Disconnect the outer handle rod from the outer handle (see step 6 on page 20-10).
6. Disconnect the cylinder cable from the latch (see step 7 on page 20-10).
7. Pull the glass run channel (A) away as needed, and remove the bolt, then remove the center lower channel (B) by pulling it downward.

Fastener Location

▶ : Bolt, 1

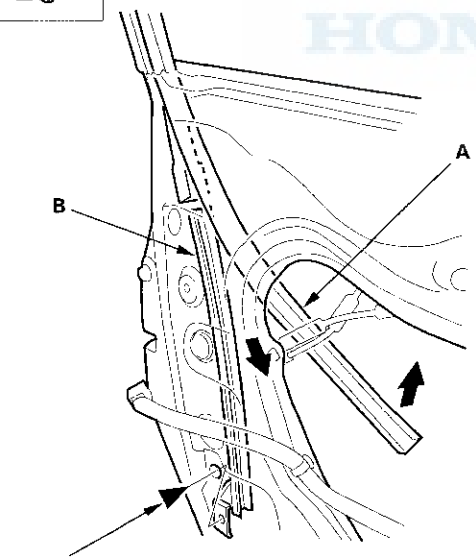

8. Detach the latch cable (A) and the inner handle cable (B) from the holder (C), then remove the screws (D, E) securing the latch (F). Remove the latch through the hole in the door. Take care not to bend the outer handle rod (G), the latch cable, or the inner handle cable.

Fastener Locations

D ▶ : Screw, 3 E ▶ : Screw, 1

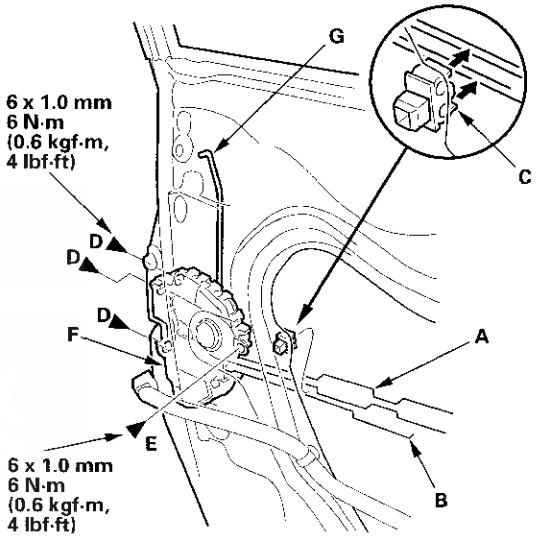

9. Remove the screw, then remove the latch protector (A) by releasing the hook (B).

Fastener Location

▶ : Screw, 1

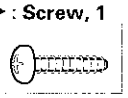

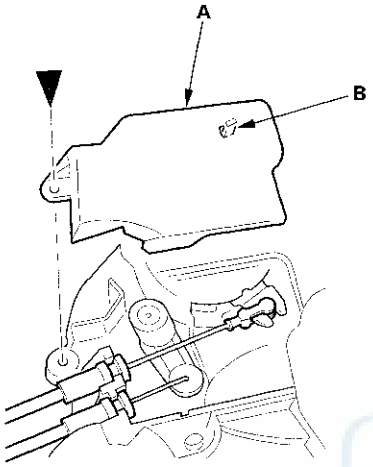

10. Detach the latch cable (A) and the inner handle cable (B) from the latch (C).

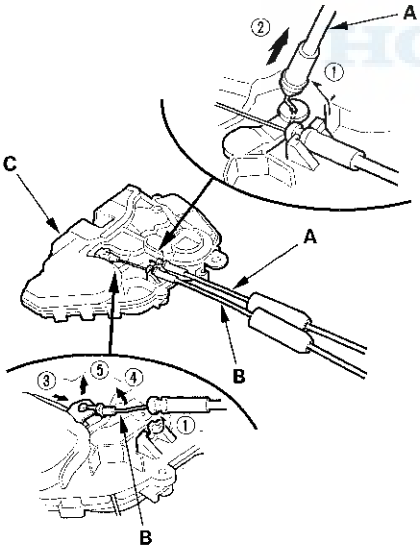

11. Install the latch in the reverse order of removal, and note these items:

- Make sure the actuator connector is plugged in properly and each rod is connected securely.
- Make sure the door locks and opens properly.
- When reinstalling the door panel, make sure the plastic cover is installed properly and sealed around its outside perimeter to seal out water.
- Check for water leaks (see step 9 on page 20-29).

Front Door Glass and Regulator Replacement

NOTE: Put on gloves to protect your hands.

1. Remove the door panel (see page 20-7).

2. Disconnect the power door lock actuator connector (A), and remove the plug caps (B).

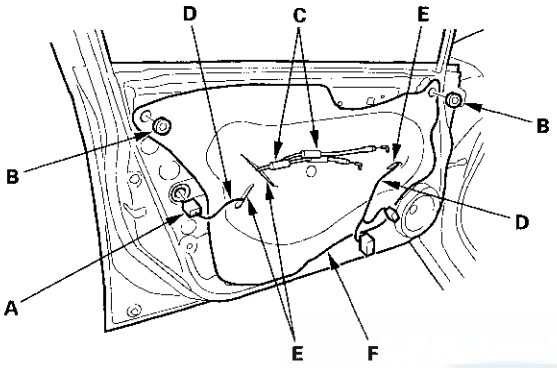

3. Pass the cables (C) and the harnesses (D) through the slits (E) in the plastic cover (F), then remove them.

4. Carefully raise the glass (A) until you can see the bolts, then remove them. Carefully pull the glass out through the window slot. Take care not to drop the glass inside the door.

Fastener Locations

▶ : Bolt, 2

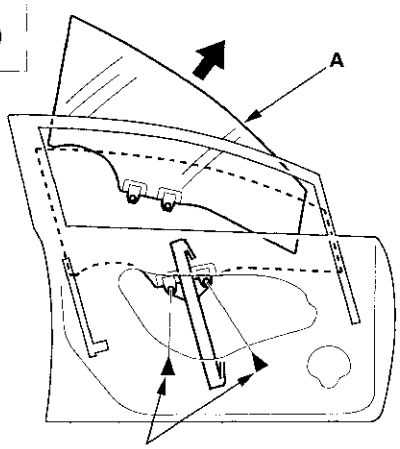

6 x 1.0 mm
9.8 N·m (1.0 kgf·m, 7.2 lbf·ft)

5. Disconnect the connector (A), and detach the harness clip (B) from the regulator (C).

Fastener Locations

D ▶ : Bolt, 2 (Black) **E ▶ : Bolt, 2 (Gold)**

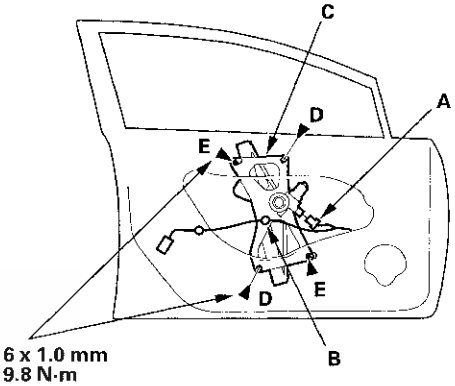

6 x 1.0 mm
9.8 N·m
(1.0 kgf·m, 7.2 lbf·ft)

6. Remove the bolts (D), and loosen the bolts (E), then remove the regulator through the hole in the door.

7. Apply multipurpose grease to all the sliding surfaces of the regulator (A) where shown.

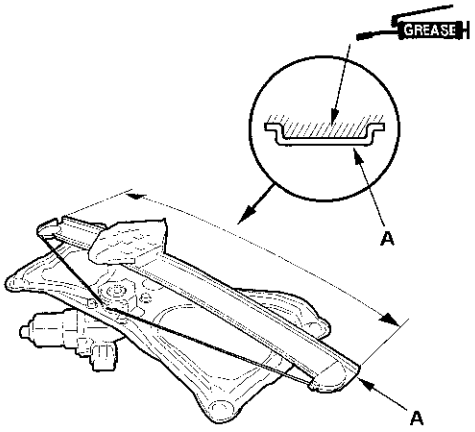

8. Install the glass and regulator in the reverse order of removal, and note these items:

   - Roll the glass up and down to verify it moves freely without binding.
   - Make sure that there is no clearance between the glass and the glass run channel when the glass is closed.
   - Adjust the position of the glass as necessary (see page 20-28).
   - Do the power window control unit reset procedure (see page 22-193).
   - When reinstalling the door panel, make sure the plastic cover is installed properly and sealed around its outside perimeter to seal out water.
   - Check for water leaks (see step 9 on page 20-29).
   - Make sure the power door locks, the windows, and the power mirror operate properly.
   - Test-drive, and check for wind noise and rattles.

Front Door Glass Outer Weatherstrip Replacement

NOTE:
- Put on gloves to protect your hands.
- Take care not to scratch the door.

1. Lower the glass fully.

2. Release the front hook (A) from inside of the door, then pull up the front door glass outer weatherstrip (B).

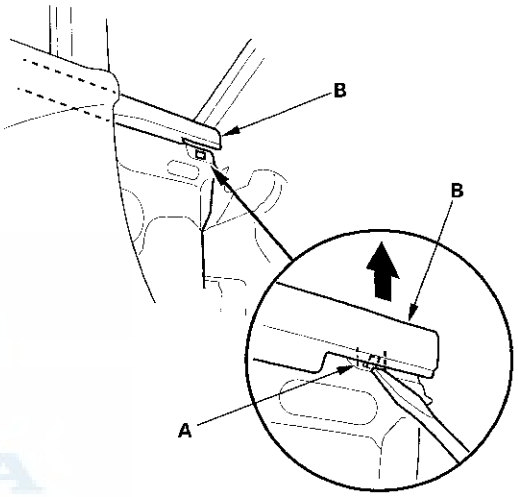

3. Starting at the front, slowly pull up the front door glass outer weatherstrip (A).

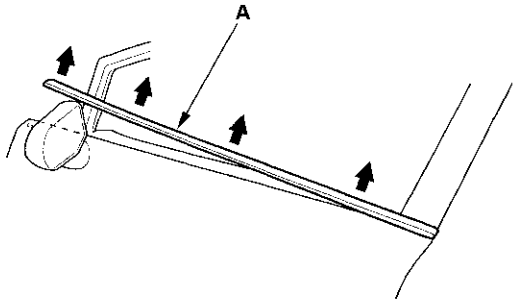

(cont'd)

Front Door Glass Outer Weatherstrip Replacement (cont'd)

4. Slide the front door glass outer weatherstrip (A) forward.

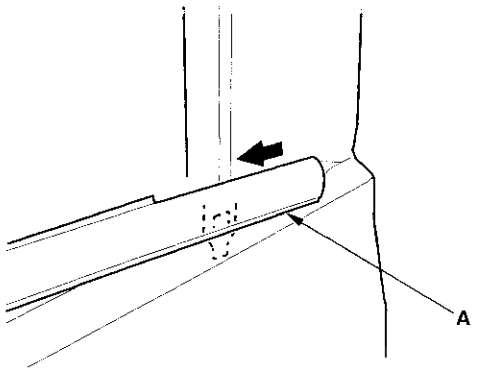

5. Twist the front door glass outer weatherstrip (A) to pull the rear hook (B) out from the inside of the door, then remove the weatherstrip.

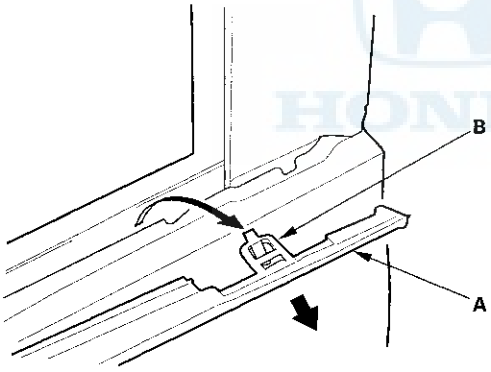

6. Push the clip portions of new front door glass outer weatherstrip into place securely.

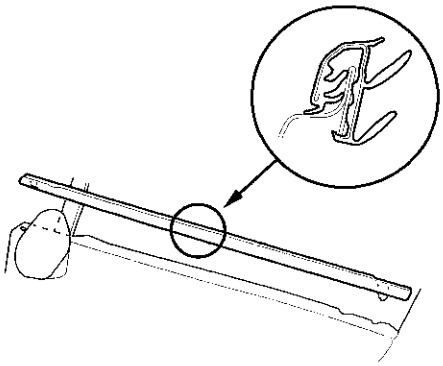

Front Door Weatherstrip Replacement

NOTE:
- Put on gloves to protect your hands.
- Take care not to scratch the door.
- Use a clip remover to remove the clips.

1. Remove the door checker mounting bolt (A) at the A-pillar.

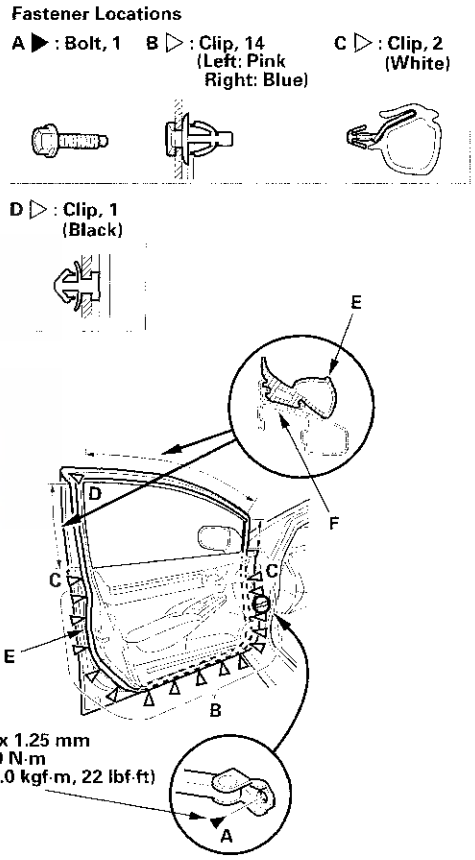

2. Detach the clips (B, C, D), then remove the door weatherstrip (E).

3. Install the weatherstrip in the reverse order of removal, and note these items:

   - If the clips are damaged or stress-whitened, replace them with new ones.
   - Make sure the weatherstrip is installed in the holder (F) securely.
   - Apply medium strength liquid thread lock to the door checker mounting bolt before installation.
   - Check for water leaks (see step 9 on page 20-29).

Rear Door Panel Removal/Installation

Special Tools Required
- KTC trim tool set SOJATP2014 *
- Trim pad remover, Snap-on A 177A or equivalent, commercially available

* Available through the Honda Tool and Equipment Program; call 888-424-6857

NOTE: Use the appropriate tool from the KTC trim tool set to avoid damage when removing components.

1. Raise the glass fully.

2. Pry out on the rear portion of the inner handle cap (A) to release the hooks (B, C) with the appropriate trim tool.

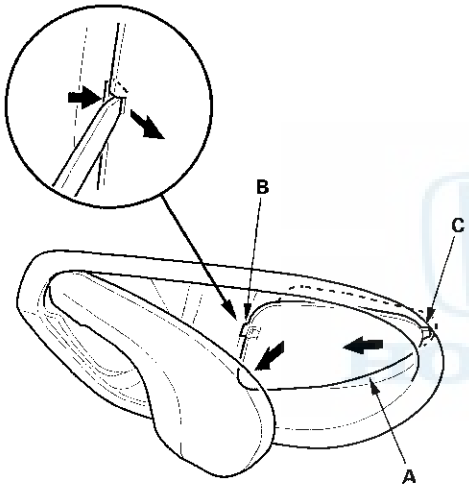

3. Remove the screw and clip securing the inner handle (A).

Fastener Locations
▶ : Screw, 1 ▷ : Clip, 1

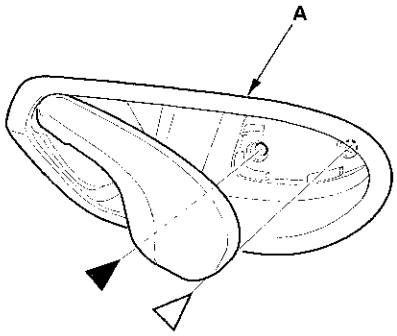

4. Remove the power window switch panel (A).
   - 1 Pry up on the rear edge of the switch panel with the appropriate trim tool to release the rear clip.
   - 2 Pull out along the edge of the panel to release the hooks (B).
   - 3 Pull the switch panel rearward to release the front hook (C).
   - 4 Disconnect the power window switch connector (D).

Fastener Location
▷ : Clip, 1

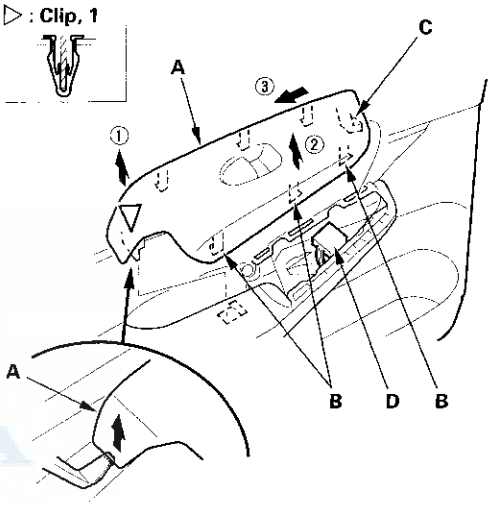

5. Remove the screw.

Fastener Location
▶ : Screw, 1

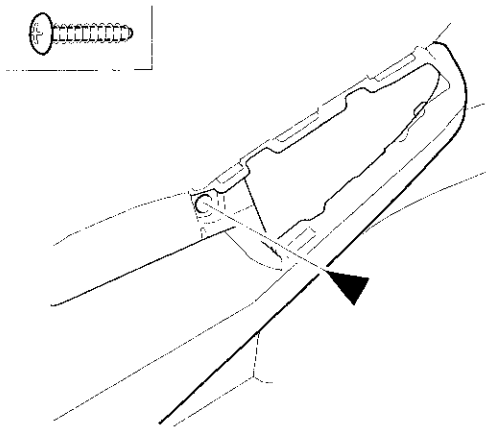

(cont'd)

Rear Door Panel Removal/Installation (cont'd)

6. Remove the door panel (A) with as little bending as possible to avoid creasing or breaking it.

   -1 Start at the bottom edge of the door panel, release the clips (B, C) that are just above the marks (D) on the edge of the panel with a commercially available trim pad remover.
   -2 Detach the upper clips.
   -3 Stating at the rear, pull the door panel upward.

   NOTE: The inner handle cable (E) and the latch cable (F) are connected to the inner handle (G). Do not pull the door panel up too far, or these cables will be damaged.

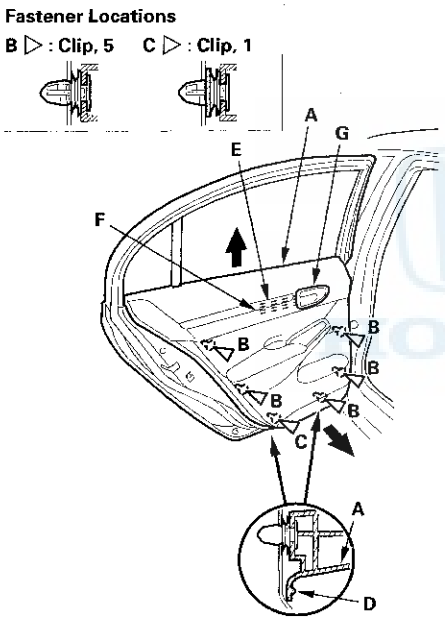

7. While holding the door panel (A) away from the door, remove the inner handle (B) from the door panel by releasing the hooks (C).

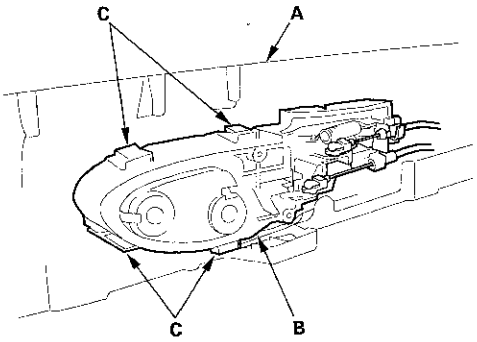

8. Remove the door panel (A) while pulling the inner handle (B) out through the hole in the door panel.

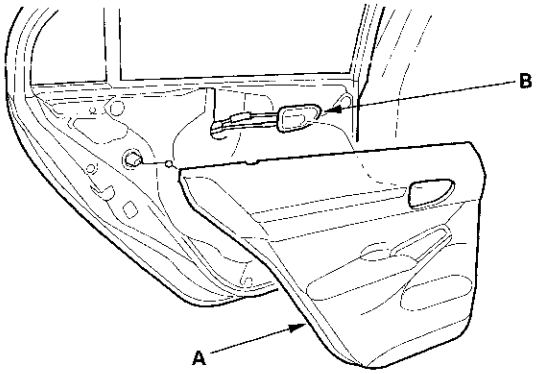

9. If necessary, disconnect the inner handle cable (A) and the latch cable (B) from the inner handle (C).

   -1 Detach the inner handle cable fastener (D), then disconnect the inner handle cable from the cable fastener (E).
   -2 Detach the latch cable fastener (F) with a flat-tip screwdriver, then disconnect the latch cable from the cable fastener (G).

   NOTE: If the cable fasteners are damaged or stress-whitened, replace them with new ones.

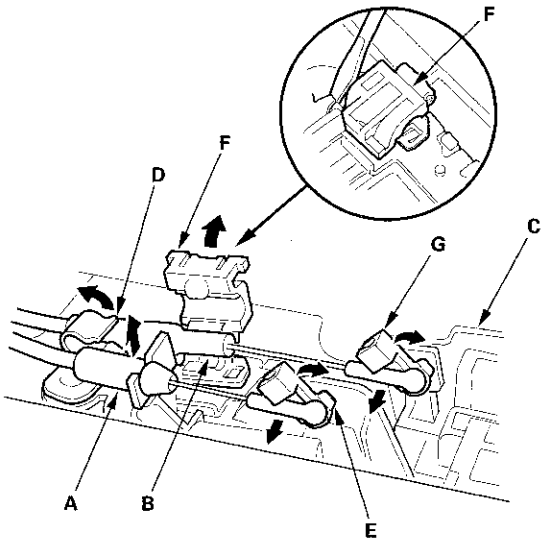

10. Install the door panel in the reverse order of removal, and note these items:

- If the clips are damaged or stress-whitened, replace them with new ones.
- Replace any damaged cable fasteners with new ones.
- The latch cable (A) should be fixed to the cable fastener (B) with the latch in lock position as shown.
- Make sure the connector is plugged in properly, and the cables are connected securely.
- Make sure the window and power door lock operate properly.
- When reinstalling the door panel, make sure the plastic cover is installed properly and sealed around its outside perimeter to seal out water.

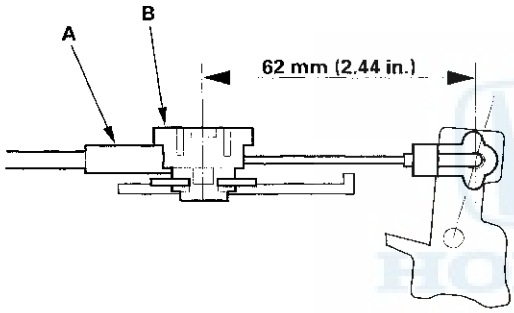

Rear Door Outer Handle Replacement

NOTE: Put on gloves to protect your hands.

1. Raise the glass fully.

2. Remove the door panel (see page 20-17).

3. Detach the harness clip (A), and disconnect the power door lock actuator connector (B).

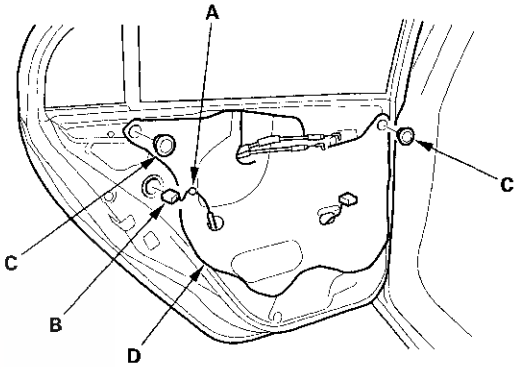

4. Remove the rear portion of the plug caps (C), then remove the plastic cover (D), as needed.

5. Remove the latch mounting screws, then lower the latch (see step 4 on page 20-21).

6. Detach the rod fastener (A).

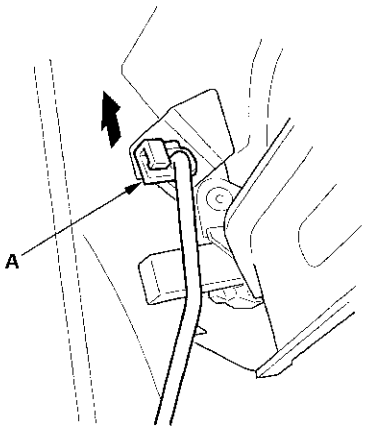

(cont'd)

Rear Door Outer Handle Replacement (cont'd)

7. Disconnect the outer handle rod (A) with a clip remover (B) from the outer handle (C).

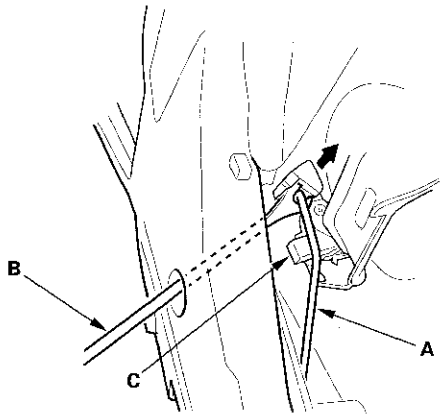

8. Remove the maintenance seal (A). Remove the bolts securing the outer handle protector (B), then remove the protector by releasing the hook (C).

Fastener Locations

▶ : Bolt, 2

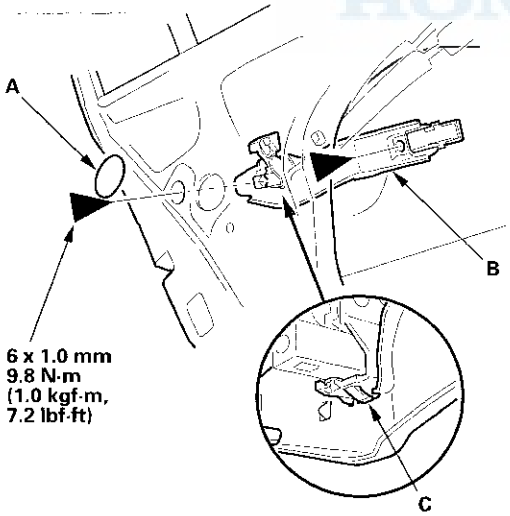

9. While pulling the outer handle (A), remove the handle from the holes in the door panel. Take care not to scratch the door.

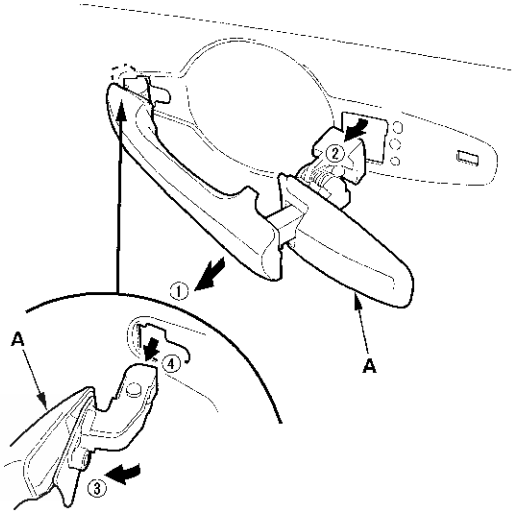

10. Remove the rod fastener (A) from the outer handle (B), then replace it with a new one.

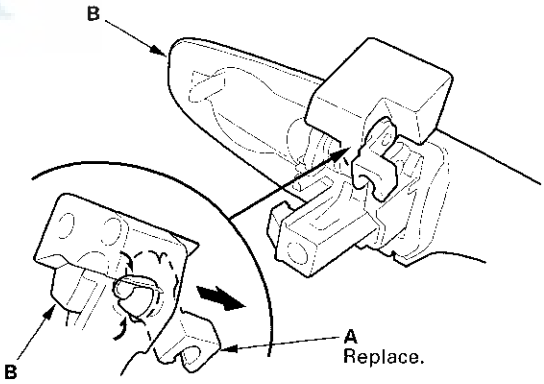

11. Install the handle in the reverse order of removal, and note these items:

    - Make sure the door locks and opens properly.
    - When reinstalling the door panel, make sure the plastic cover is installed properly and sealed around its outside perimeter to seal out water.

Rear Door Latch Replacement

NOTE: Put on gloves to protect your hands.

1. Raise the glass fully.
2. Remove the door panel (see page 20-17).
3. Remove the plastic cover, as needed (see step 3 on page 20-19).
4. Remove the screws (A, B) securing the latch (C), then lower it.

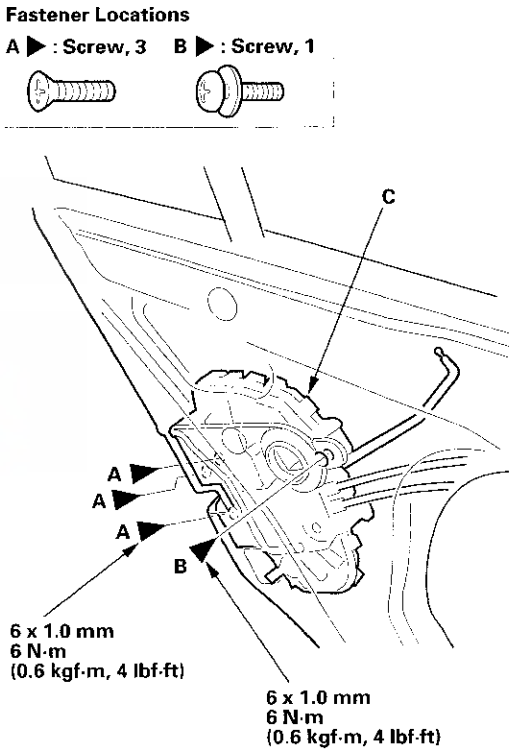

5. Detach the rod fastener (see step 6 on page 20-19).
6. Disconnect the outer handle rod from the outer handle (see step 7 on page 20-20).

(cont'd)

Rear Door Latch Replacement (cont'd)

7. Detach the latch cable (A) and the inner handle cable (B) from the holder (C), then remove the latch (D) out from between the rear lower channel (E) and the door. Take care not to bend the outer handle rod (F), the latch cable, or the inner handle cable.

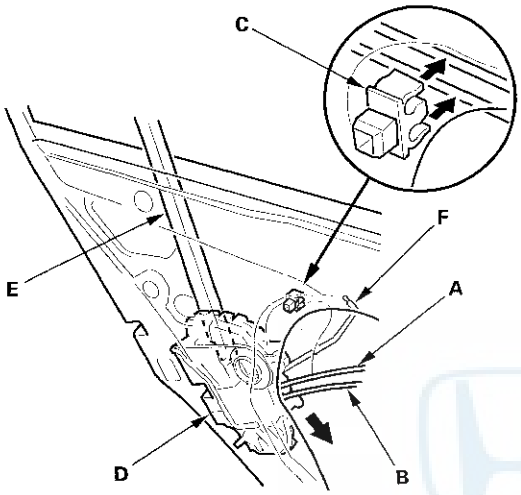

8. Remove the screw, then remove the latch protector (A) by releasing the hook (B).

Fastener Location

▶ : Screw, 1

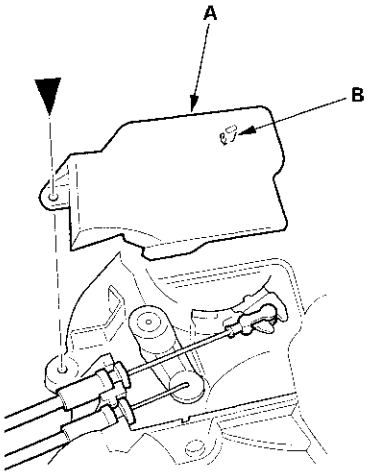

9. Detach the latch cable (A) and the inner handle cable (B) from the latch (C).

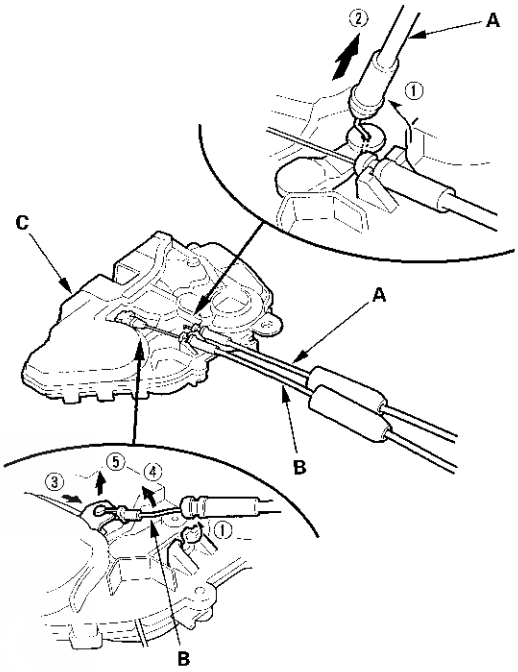

10. Install the latch in the reverse order of removal, and note these items:

- Make sure the connector is plugged in properly, and each rod is connected securely.
- Make sure the door locks and opens properly.
- When reinstalling the door panel, make sure the plastic cover is installed properly and sealed around its outside perimeter to seal out water.

Rear Door Glass and Regulator Replacement

NOTE: Put on gloves to protect your hands.

1. Remove the door panel (see page 20-17).

2. Detach the harness clip (A), and disconnect the power door lock actuator connector (B). Remove the plug caps (C).

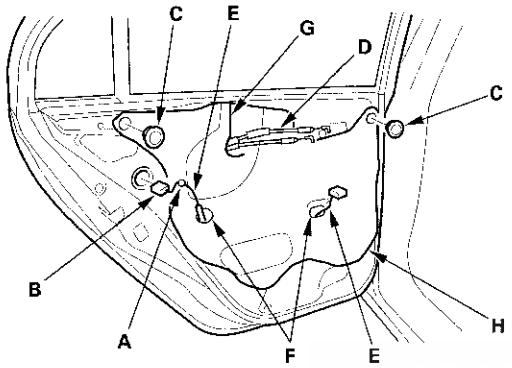

3. Pass the cable (D) and the harnesses (E) through the holes (F) and slit (G) in the plastic cover (H), then remove it.

4. Carefully move the glass (A) until you can see the bolts, then remove them. Release the glass from the holder (B), then remove it from the regulator (C), and carefully lower the glass. Take care not to drop the glass inside the door.

Fastener Locations

▶ : Bolt, 2

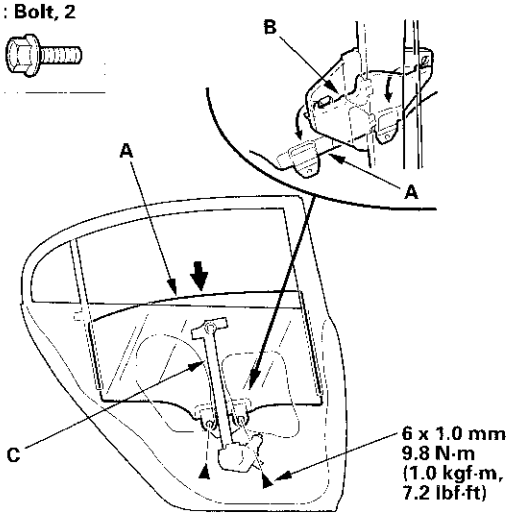

5. Remove the bolt (A) from the rear lower channel (B). Pull the glass run channel (C) away as needed, and remove the screw (D).

Fastener Locations

A ▶ : Bolt, 1 D ▶ : Screw, 1

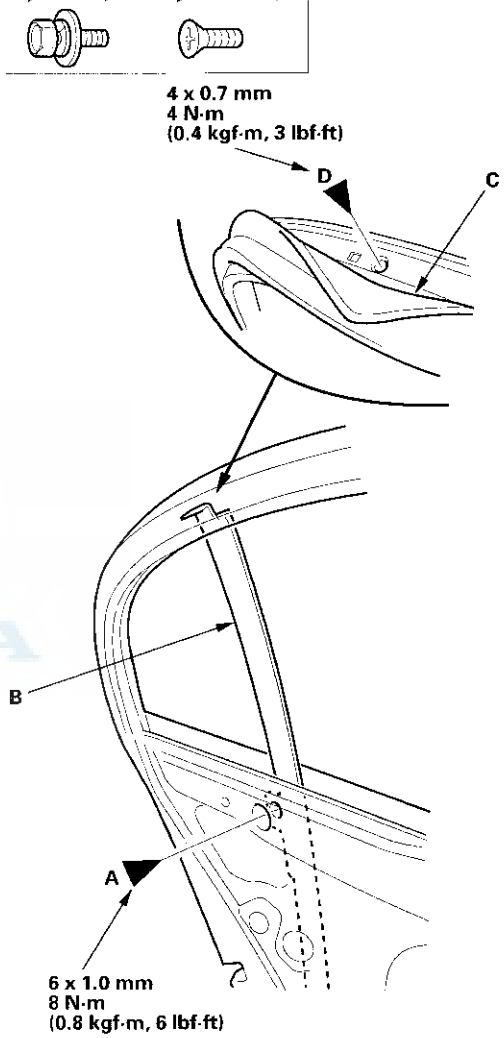

(cont'd)

Rear Door Glass and Regulator Replacement (cont'd)

6. Pull the glass run channel (A) away as needed. Pull the rear lower channel (B) forward from the quarter glass seal (C), then release the upper hook (D) from the door. Remove the rear lower channel from the rear door glass (E), then pull the channel up to remove it.

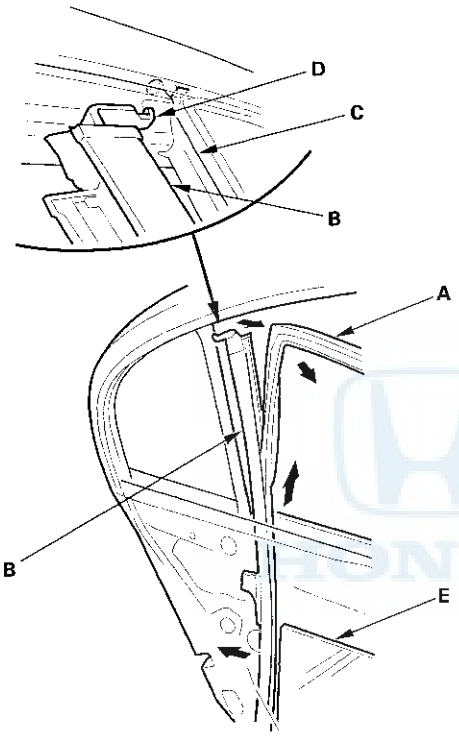

7. Remove the rear lower channel (A) from the glass run channel (B).

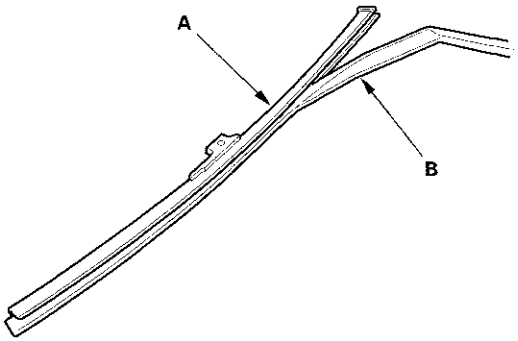

8. Carefully remove the glass (A) out through the window slot. Take care not to drop the glass inside the door.

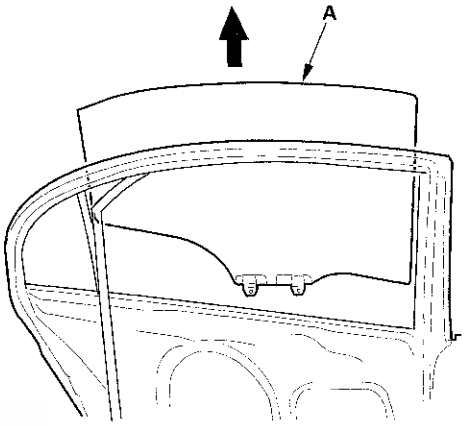

9. Remove the quarter glass (A). Take care not to damage the outer weatherstrip (B).

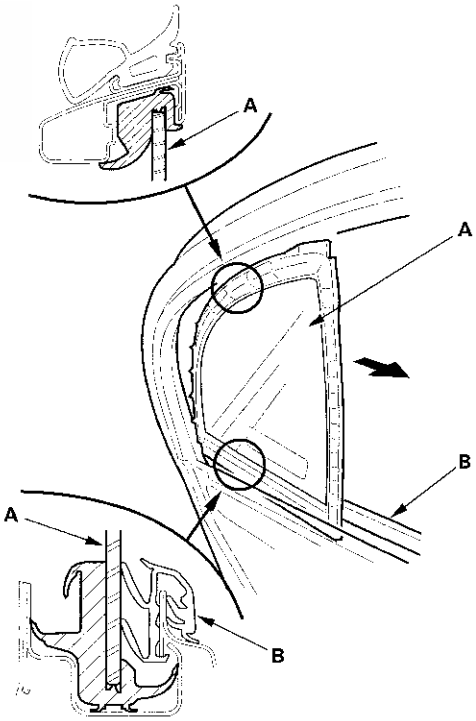

10. Disconnect the connector (A) from the regulator (B).

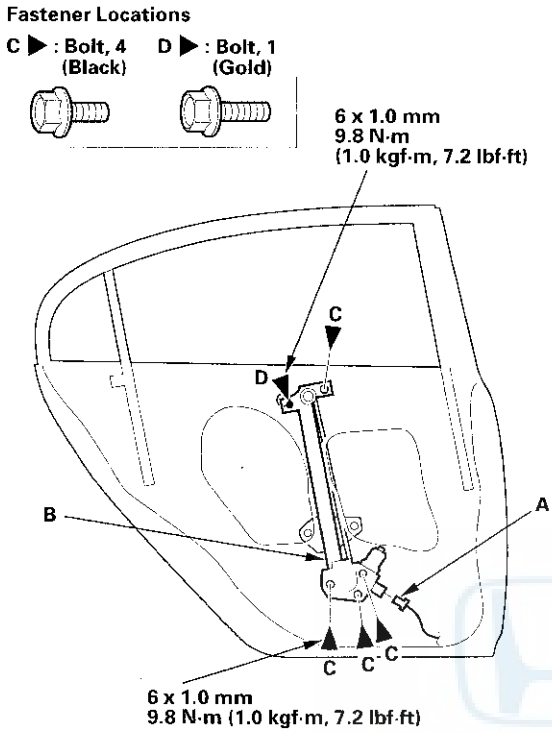

11. Remove the bolts (C), and loosen the bolt (D), then remove the regulator through the hole in the door.

12. Grease all the sliding surfaces of the regulator (A) where shown.

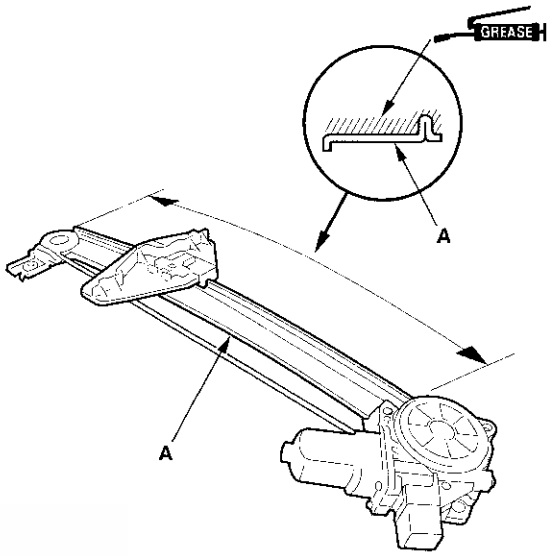

13. Install the glass and regulator in the reverse order of removal, and note these items:

- Roll the glass up and down to verify it moves freely without binding.
- Make sure that there is no clearance between the glass and the glass run channel when the glass is closed.
- Adjust the position of the glass as necessary (see page 20-28).
- When reinstalling the door panel, make sure the plastic cover is installed properly and sealed around its outside perimeter to seal out water.
- Check for water leaks (see step 9 on page 20-29).

Rear Door Glass Outer Weatherstrip Replacement

NOTE:
- Put on gloves to protect your hands.
- Take care not to scratch the door.

1. Remove these items:

   - Door panel (see page 20-17)
   - Plastic cover (see step 3 on page 20-19)
   - Rear door glass (see page 20-23)
   - Quarter glass (see step 9 on page 20-24)

2. Release the front hook (A) from inside of the door, then pull up the front portion of the rear door glass outer weatherstrip (B).

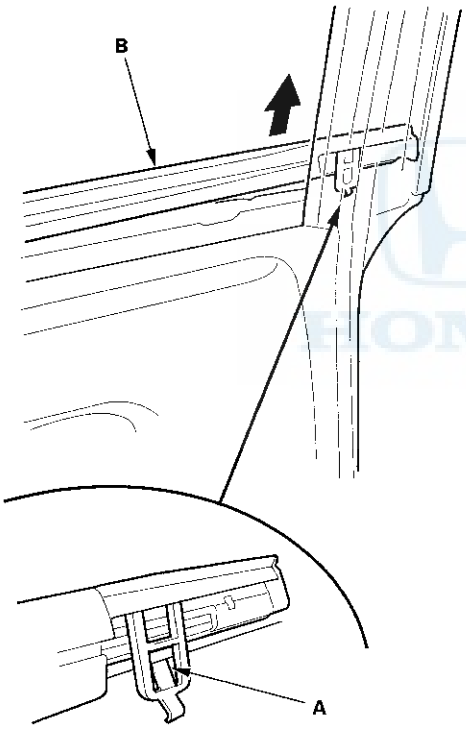

3. Starting at the front, slowly pull up the rear door glass outer weatherstrip (A).

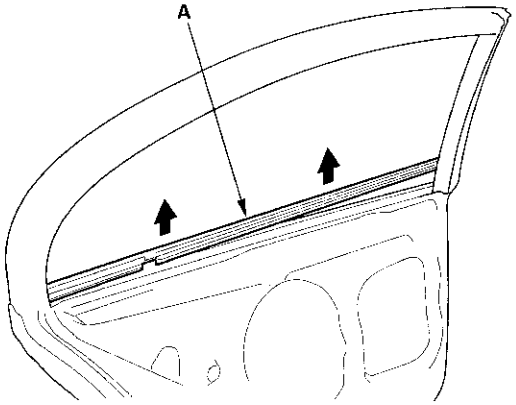

4. Push the rear hook (A) out from inside of the door, then remove the rear door glass outer weatherstrip (B).

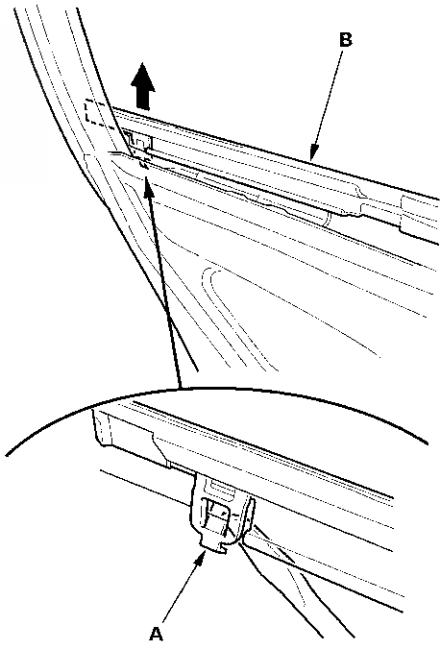

5. Push the clip portions of the rear door glass outer weatherstrip into place securely.

Rear Door Weatherstrip Replacement

NOTE:
- Put on glove to protect your hands.
- Take care not to scratch the door.
- Use a clip remover to remove the clips.

1. Remove the door checker mounting bolt (A) at the B-pillar.

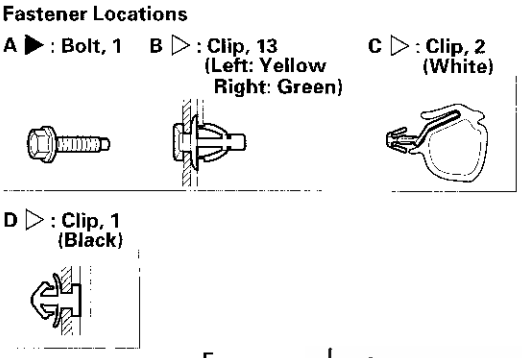

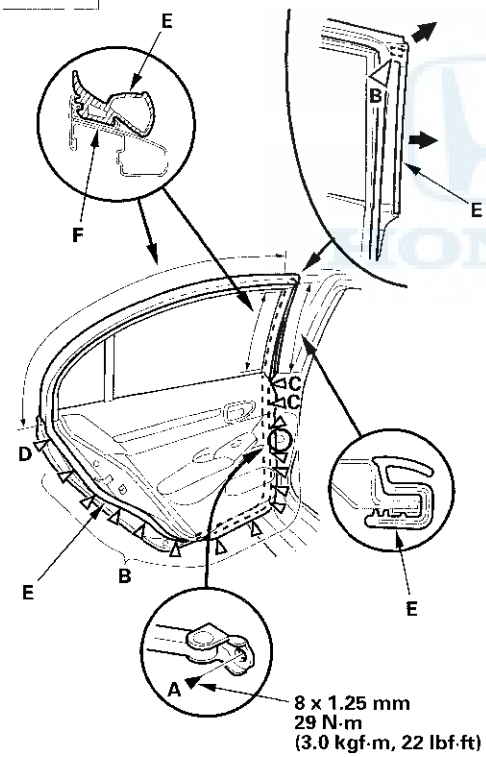

2. Detach the clips (B, C, D), then remove the door weatherstrip (E).

3. Install the weatherstrip in the reverse order of removal, and note these items:

   - If the clips are damaged or stress-whitened, replace them with new ones.
   - Make sure the weatherstrip is installed in the holder (F) securely.
   - Apply medium strength liquid thread lock to the door checker mounting bolt before installation.
   - Check for water leaks (see step 9 on page 20-29).

Front and Rear Door Glass Adjustment

NOTE: If the weatherstrip or the glass run channel are damaged or deteriorated, replace them with new ones.

1. Place the vehicle on a firm, level surface.

2. Remove these items:

   - Door panel:
     - Front door (see page 20-7)
     - Rear door (see page 20-17)
   - Plastic cover:
     - Front door (see step 2 on page 20-14)
     - Rear door (see step 3 on page 20-19)

3. Carefully move the glass (A) until you can see the glass mounting bolts (B), then loosen them.

Front

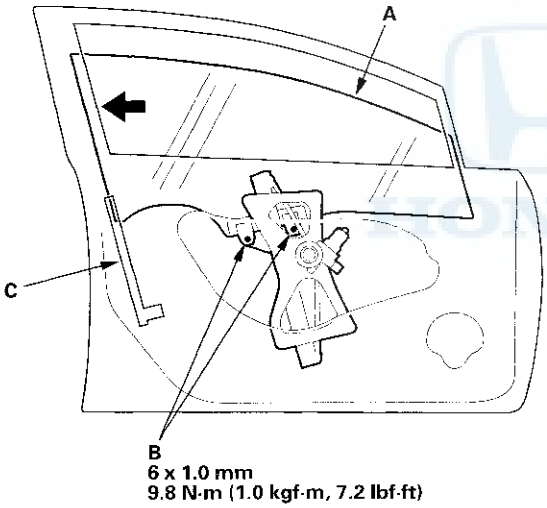

Rear

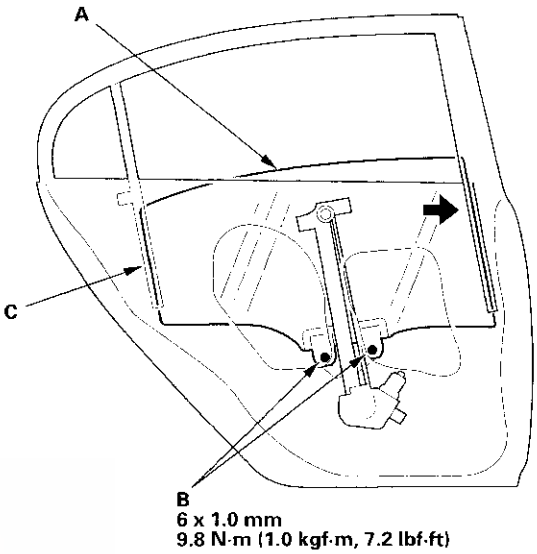

4. Push the glass against the channel (C), then tighten the glass mounting bolts.

5. Check that the glass moves smoothly.

6. Raise the glass fully, and check for gaps. Also make sure that the glass (A) contacts the glass run channel (B) evenly.

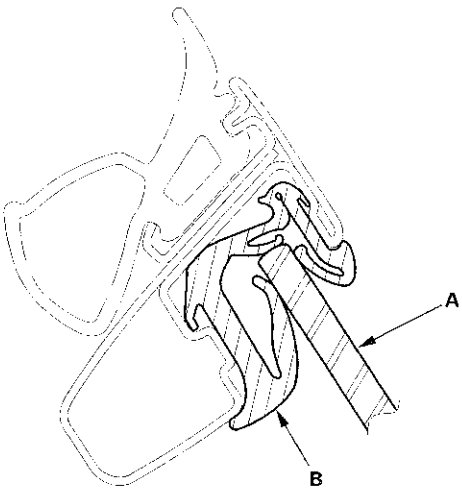

7. Attach the plastic cover making sure it is sealed around its outside perimeter to seal out water.

8. Reinstall the door panel:

   - Front door (see page 20-7)
   - Rear door (see page 20-17)

9. Check for water leaks. Run water over the roof and on the sealing area as shown, and note these items:

   - Use a 12 mm (1/2 in.) diameter hose (A).
   - Adjust the rate of water flow as shown (B).
   - Do not use a nozzle.
   - Hold the hose about 300 mm (12 in.) away from the door (C).

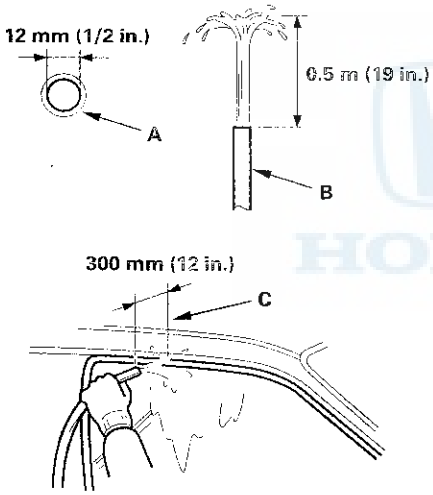

Front and Rear Door Position Adjustment

NOTE: Check for a flush fit with the body, then check for equal gaps between the front, the rear, and bottom door edges and the body. Check that the door and the body edges are parallel. If necessary, replace the mounting bolts before adjusting the door position.

1. Place the vehicle on a firm, level surface when adjusting the doors.

2. Adjust at the hinges (A):

   - Pad a floor jack (B) with shop towels (C), then use the jack to support the door to prevent damage to the door while adjusting it.
   - On the front door: Remove the front inner fender (see page 20-147). Loosen the hinge mounting bolts (D) slightly, and move the door backward or forward, up or down as necessary to equalize the gaps.
   - On the rear door: Loosen the hinge mounting bolts (E) slightly, and move the door backward or forward, up or down as necessary to equalize the gaps.

Front door

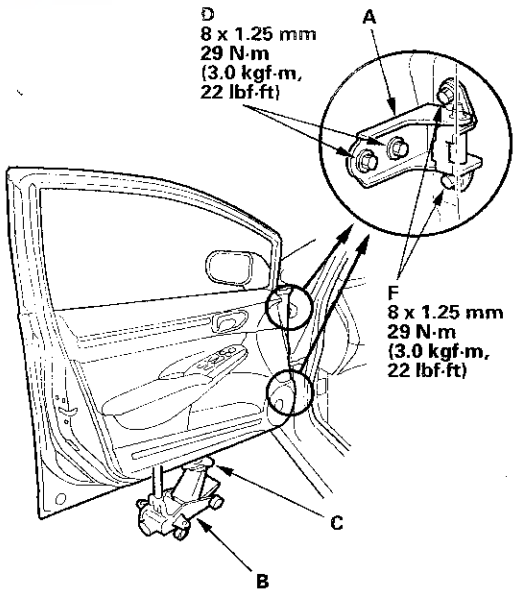

(cont'd)

Front and Rear Door Position Adjustment (cont'd)

Rear door

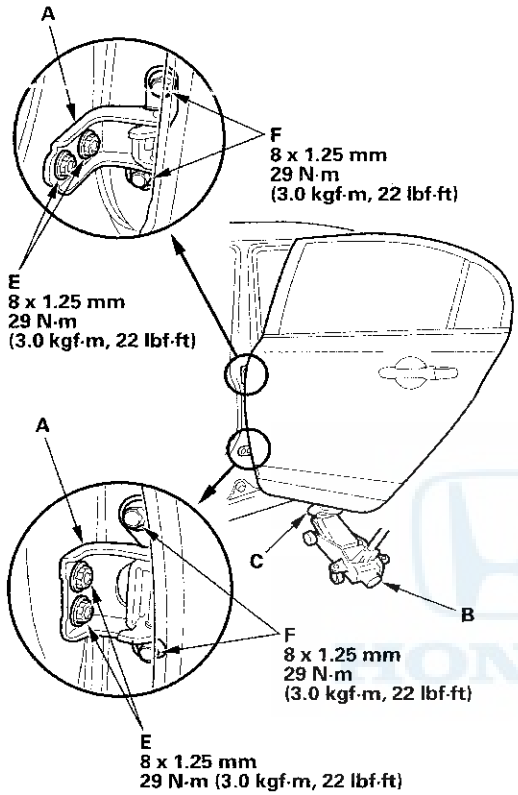

3. If necessary, replace the door mounting bolts with the adjusting bolts (P/N 90102-SFA-305) made specifically for door adjustment, then adjust at the door: Loosen the door mounting bolts (F) slightly, and move the door up or down as necessary to equalize the gaps, and move it in or out until it's flush with the body.

4. Check that the door and body edges are parallel. If necessary, adjust the door cushions (A) to make the rear of the doors flush with the body.

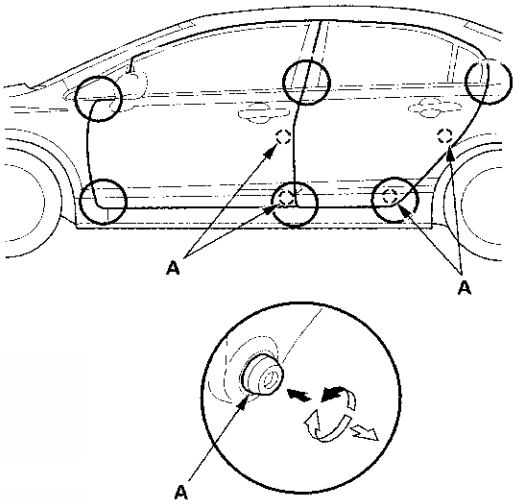

5. Apply touch-up paint to the hinge mounting bolts, and around the hinges.

6. Check for water leaks (see step 9 on page 20-29).

Front and Rear Door Striker Adjustment

Make sure the door latches securely without slamming it. If necessary, adjust the striker (A): The striker nuts are fixed, but the striker can be adjusted slightly up or down, and in or out.

1. Loosen the screws (B).

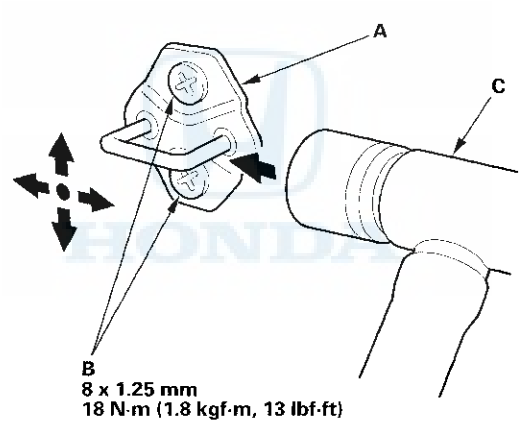

2. Wrap the striker with a shop towel, then adjust the striker by tapping it with a plastic hammer (C). Do not tap the striker too hard.

3. Lightly tighten the screws.

4. Hold the outer handle out, and push the door against the body to be sure the striker allows a flush fit. If the door latches properly, tighten the screws to the specified torque, and recheck.

Component Location Index

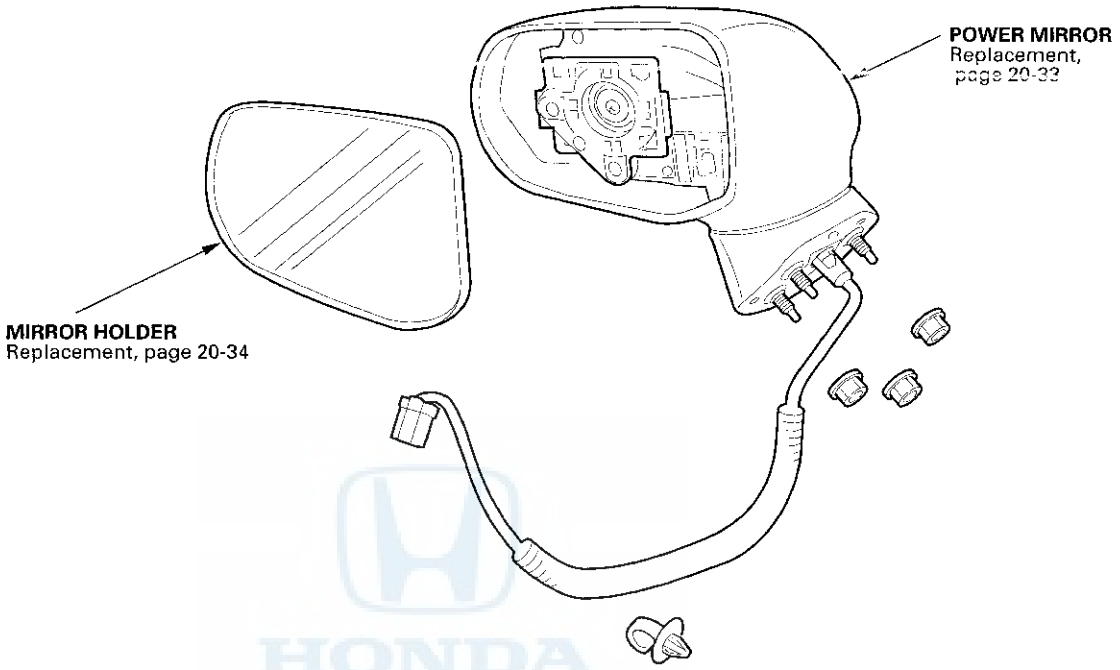

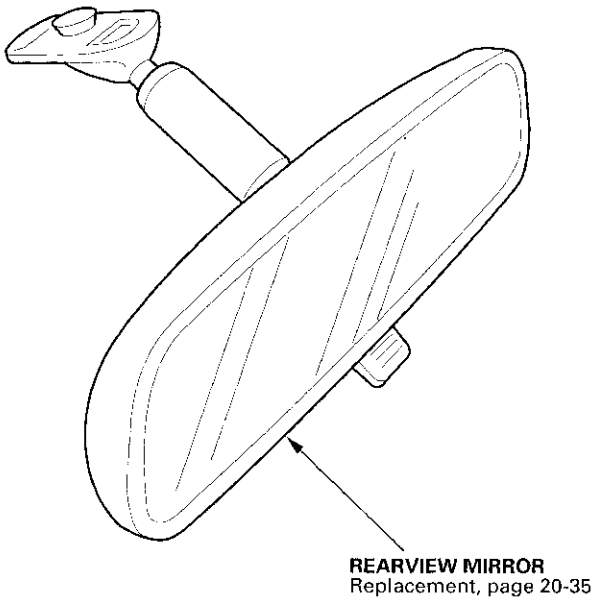

Power Mirror Replacement

1. Raise the door glass fully.

2. Remove these items:

   - Door panel (see page 20-7)
   - Plastic cover, as needed (see step 3 on page 20-9)

3. Disconnect the connector (A), and detach the harness clip (B).

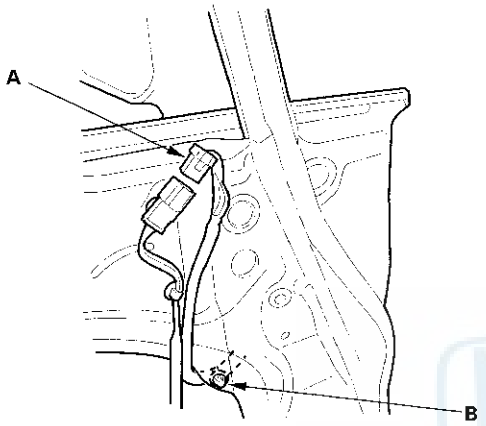

4. Remove the maintenance caps (A), and remove the nuts.

Fastener Locations

● : Nut, 3

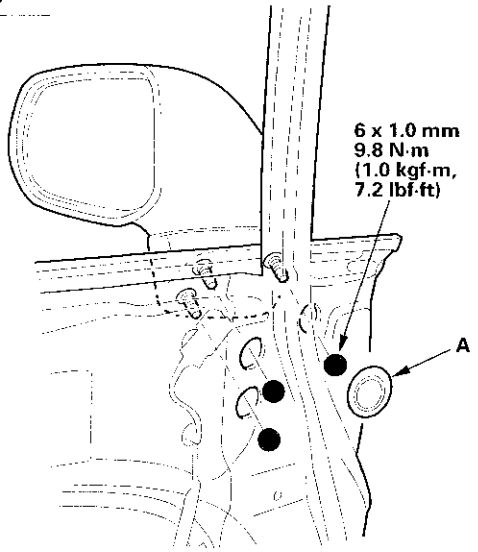

5. While holding the mirror (A), detach the clip (B), then remove the mirror, and pull the harness (C) out through the hole in the door. Take care not to scratch the door.

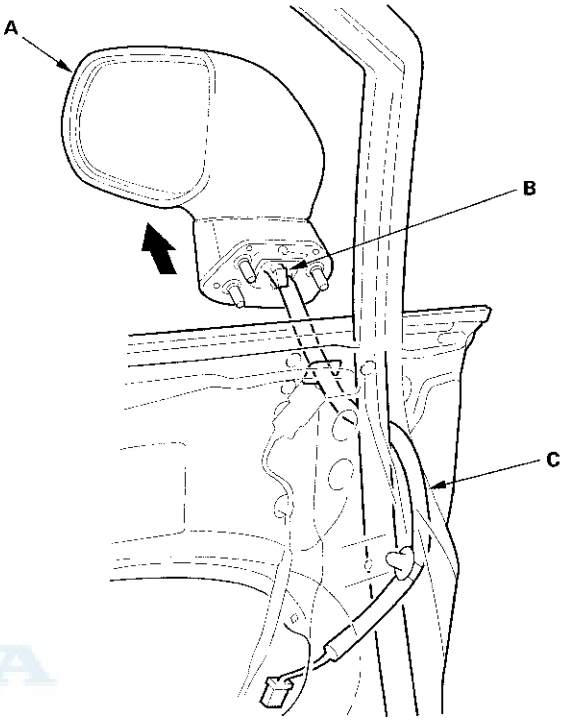

6. Install the mirror in the reverse order of removal, and make sure the connector is plugged in properly.

Mirror Holder Replacement

NOTE: Put on gloves to protect your hands.

1. Carefully push on the top edge of the mirror holder (A) by hand.

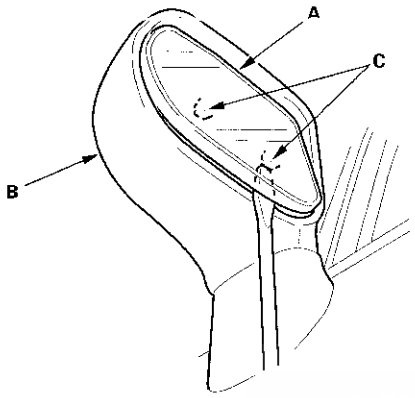

2. Put a shop towel in the opening between the lower edge of the mirror holder and the mirror housing (B) to prevent scratches, and detach the bottom clips (C) with a flat-tip screwdriver wrapped with protective tape.

3. Carefully pull out the bottom edge of the mirror holder (A) to separate the adhesive (B), and then release the side clips (C).

   NOTE: In cold weather, gently heat the mirror holder to at least 68 °F (20 °C) before removing it.

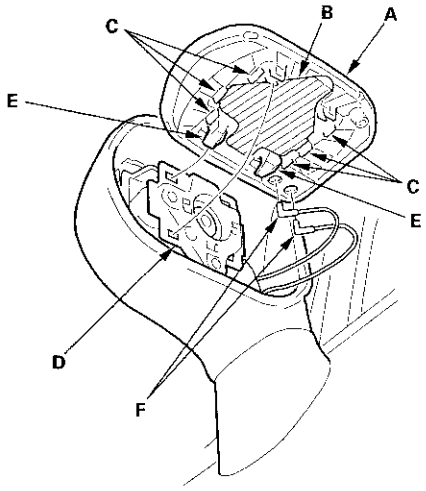

4. Separate the mirror holder from the actuator (D) by releasing the hooks (E). If equipped, disconnect the mirror defogger connectors (F).

5. Before reinstalling the mirror holder to the inner holder (A) on the actuator, check the actuator rods (B) and the actuator boots (C). Make sure the actuator rods are securely mounted in the holes, and that the boots properly cover each rod.

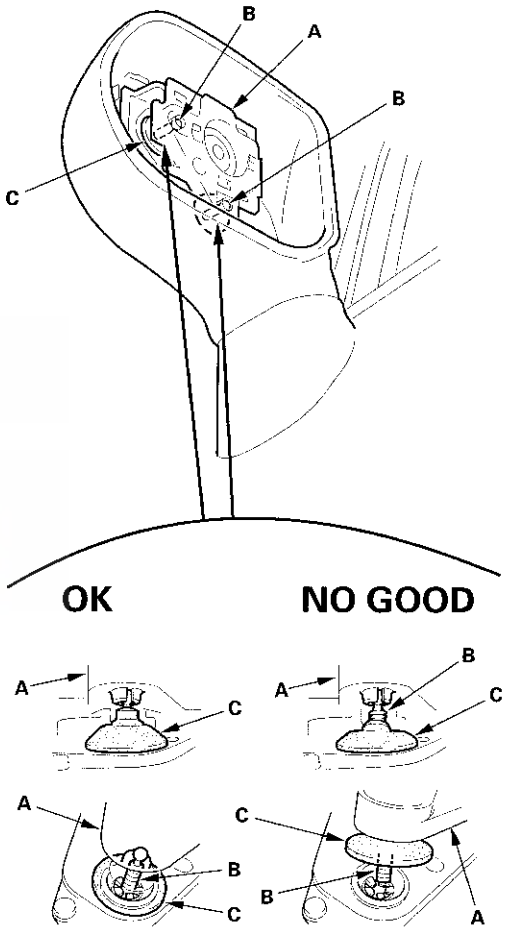

6. If equipped, reconnect the mirror defogger connectors.

7. Reattach the hooks of the mirror holder to the actuator, then position the mirror holder on the actuator. Carefully push on the clip portions of the mirror holder until the mirror holder locks into place.

8. Check the actuator operation.

Rearview Mirror Replacement

1. Turn the rearview mirror base (A) 90 °.

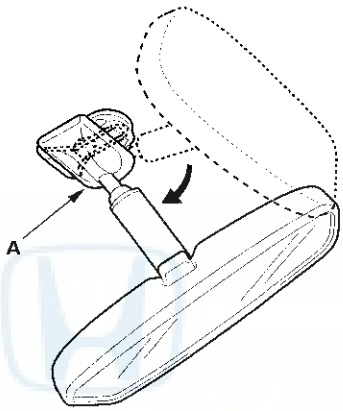

2. Slide the rearview mirror (A) down toward the bottom of the windshield to detach it from the spring (B) in the mount (C).

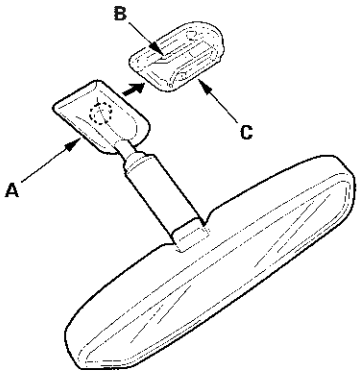

3. Install the rearview mirror in the reverse order of removal.

Component Location Index

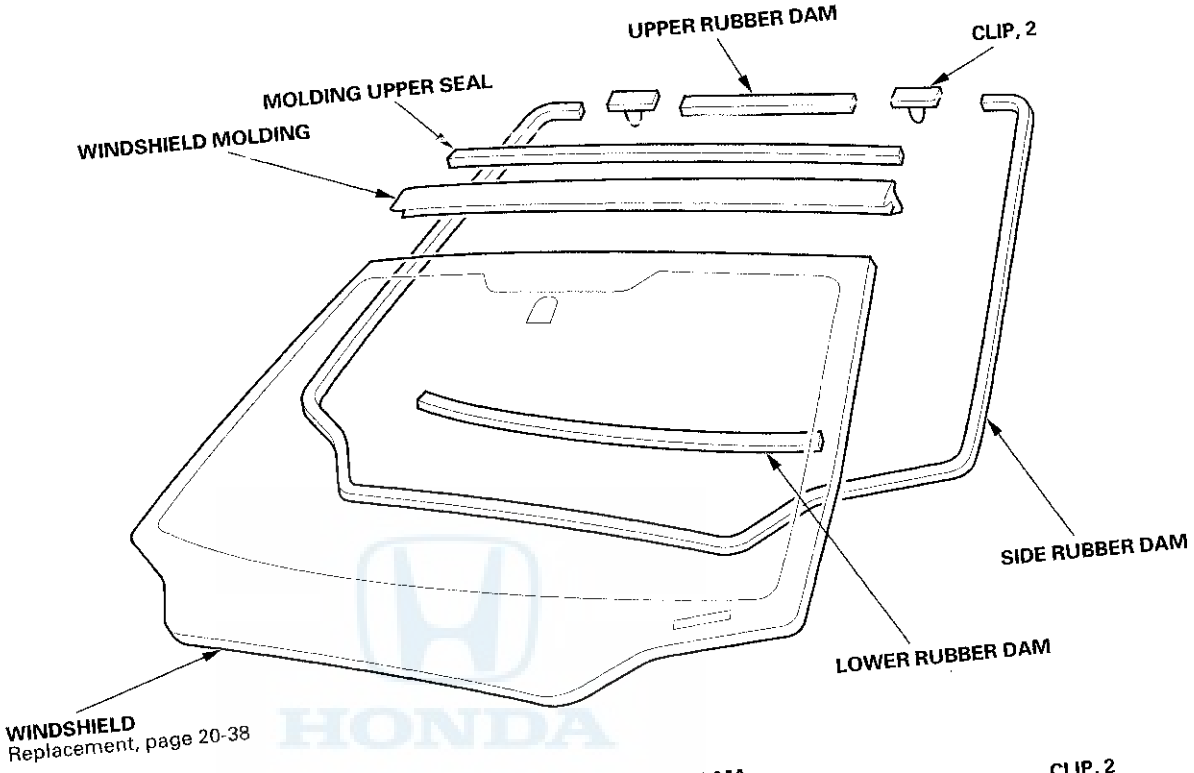

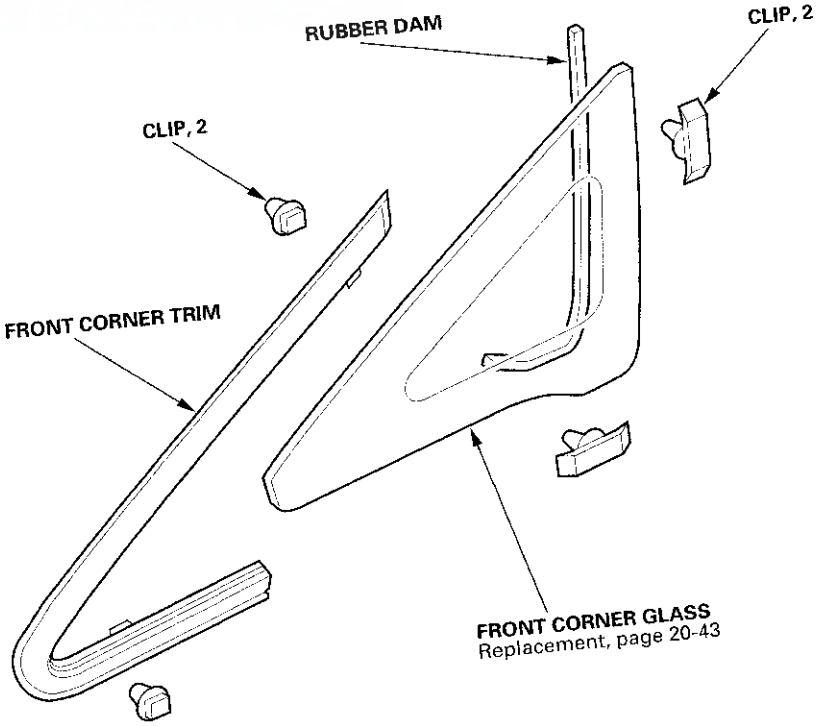

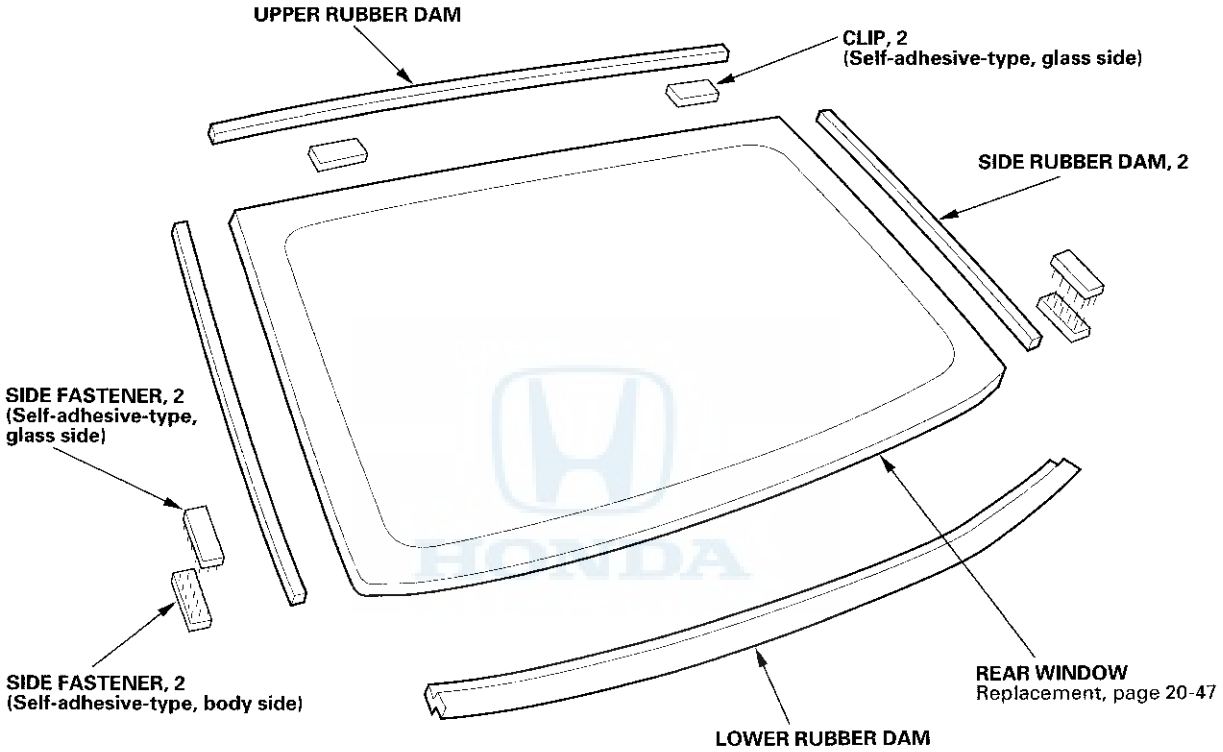
UPPER RUBBER DAM
CLIP, 2
(Self-adhesive-type, glass side)
SIDE RUBBER DAM, 2
SIDE FASTENER, 2
(Self-adhesive-type,
glass side)
SIDE FASTENER, 2
(Self-adhesive-type, body side)
REAR WINDOW
Replacement, page 20-47
LOWER RUBBER DAM

Windshield Replacement

NOTE:
- Put on gloves to protect your hands.
- Wear eye protection while cutting the glass adhesive with a piano wire.
- Use seat covers to avoid damaging the seat.
- When replacing a broken windshield, a commercially available windshield cutter can be efficiently used for cutting the adhesive. For details, follow the tool manufacturer's instructions.

1. Remove these items:

   - Windshield wiper arms (see page 22-215)
   - Cowl covers (see page 20-140)
   - Rearview mirror (see page 20-35)
   - A-pillar trim, both sides (see page 20-57)
   - Roof moldings (see page 20-141)

2. Remove the molding (A) from the upper edge of the windshield (B). If necessary, cut the molding with a utility knife.

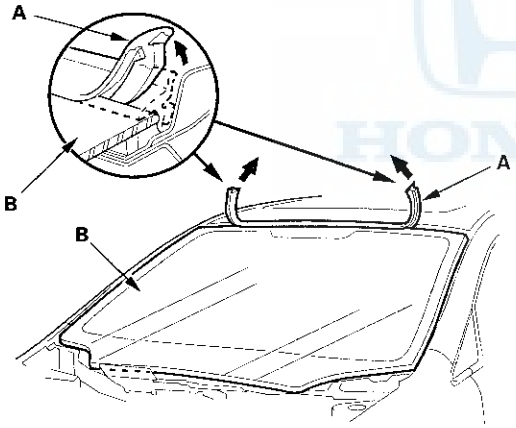

3. If the old windshield will be reinstalled, make alignment marks across the glass and the body with a grease pencil.

4. Pull down the front portion of the headliner (see page 20-71). Take care not to bend the headliner excessively, or you may crease or break it.

5. Apply protective tape along the edge of the dashboard and the body. Make a hole with an awl through the rubber dam and the adhesive from inside the vehicle at a corner of the windshield. Push a piece of piano wire through the hole, and wrap each end around a piece of wood.

6. With a helper on the outside, pull the piano wire (A) back and forth in a sawing motion. Hold the piano wire as close to the windshield (B) as possible to prevent damage to the body and the dashboard. Carefully cut through the rubber dam and the adhesive (C) around the entire windshield.

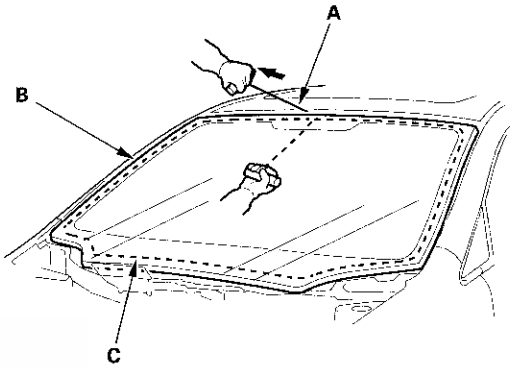

Cutting positions

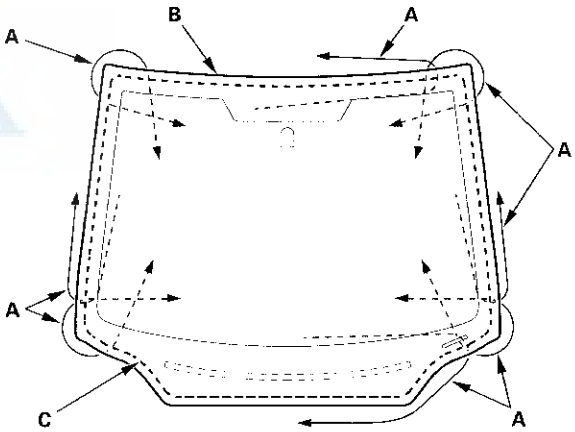

7. Carefully remove the windshield.

8. Scrape smooth the old adhesive, using a putty knife or similar tool, until there is a thickness of about 2 mm (0.08 in.) on the bonding surface around the entire windshield opening flange:

   - Do not scrape down to the painted surface of the body; damaged paint will interfere with proper bonding.
   - Remove the rubber dam and the fasteners from the body.
   - Replace the dashboard seal with a new one.

9. Clean the body bonding surface with a shop towel dampened in isopropyl alcohol. After cleaning, keep oil, grease and water from getting on the clean surface.

10. If the old windshield will be reinstalled, scrape off the old adhesive, the fasteners, and the rubber dam from the windshield with a putty knife. Clean the bonding surfaces on the inside face and the edge of the windshield with isopropyl alcohol. Make sure the bonding surface is kept free of water, oil, and grease.

11. Attach the upper rubber dam (A), the side rubber dam (B), and the clips (C) with adhesive tape to the inside face of the windshield (D) as shown:

   - Be sure the rubber dam and the clips line up with the alignment marks (E).
   - Be sure the index tabs (F) of the left and the right clips faces the left side.
   - Be careful not to touch the windshield where the adhesive will be applied.

Rubber dams adhesive tape:
Thickness 0.16 mm (0.006 in.)
Width 3.5 mm (0.14 in.)
Clips adhesive tape:
Thickness 0.4 mm (0.016 in.)
Width 10 mm (0.39 in.)

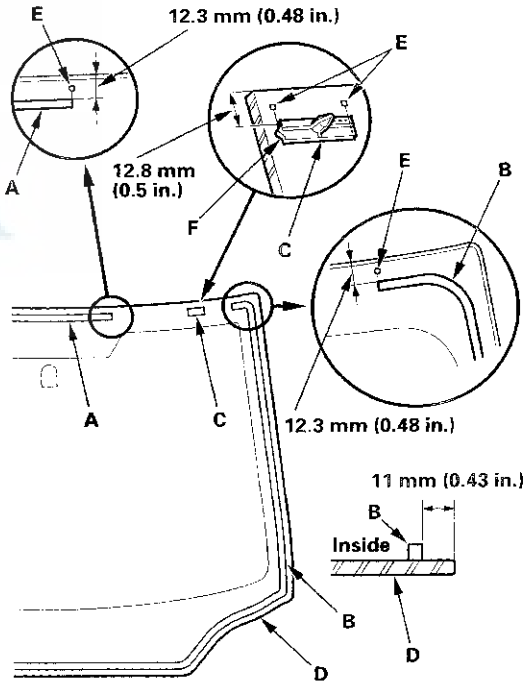

(cont'd)

Windshield Replacement (cont'd)

12. Attach the molding (A) with adhesive tape (B) to the upper edge of the windshield (C). Be careful not to touch the windshield where the adhesive will be applied.

    Molding adhesive tape:
    Thickness 0.8 mm (0.03 in.)
    Width 4 mm (0.16 in.)

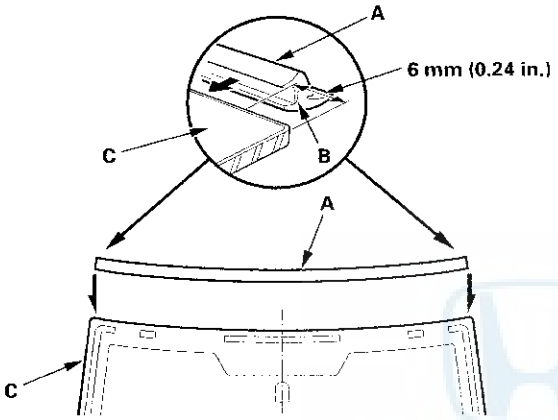

13. Apply primer to the molding (A), then attach the molding upper seal (B) with adhesive tape to the inside surface of the molding as shown.

    Seals adhesive tape: Thickness 0.16 mm (0.006 in.)
    Width 7 mm (0.28 in.)

    : Apply primer here.

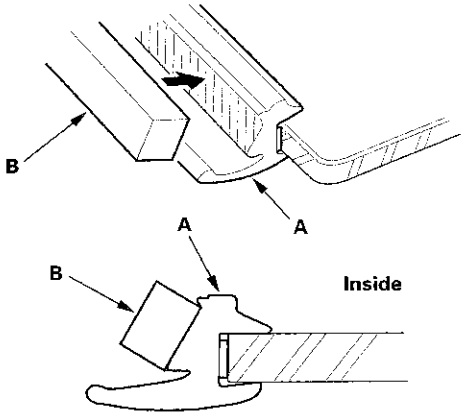

14. Attach the lower rubber dam (A) with adhesive tape to the body as shown.
    Do not peel the glass side adhesive backing.

    Rubber dam adhesive tape:
    Thickness 0.16 mm (0.006 in.)
    Width 5 mm (0.2 in.)

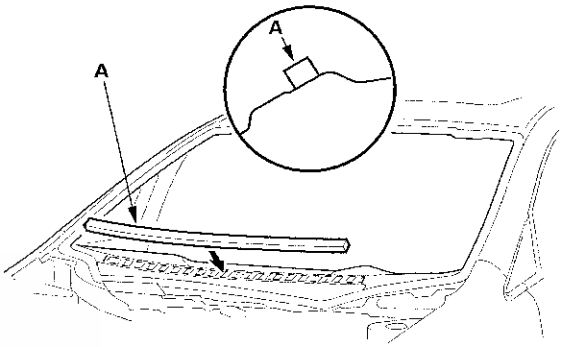

15. Set the windshield in the opening, and center it. Make alignment marks (A) across the windshield and the body with a grease pencil at the four points shown. Make sure both clips (B) contact with the edge of the body holes. Be careful not to touch the windshield where the adhesive will be applied.

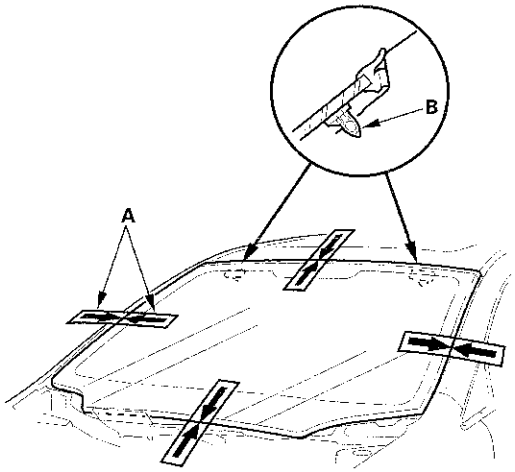

16. Remove the windshield.

17. Apply a light coat of glass primer with a sponge applicator around the edge of the windshield (A) between the dams (B) and the molding (C) as shown, then lightly wipe it off with a gauze or cheesecloth:

- Apply glass primer to the molding.
- Do not apply body primer to the windshield, and do not get the body and the glass primer sponge applicators mixed up.
- Never touch the primed surfaces with your hands. If you do, the adhesive may not bond to the windshield properly, causing a leak after the windshield is installed.
- Keep water, dust, and abrasive materials away from primed surfaces.

: Apply glass primer here.

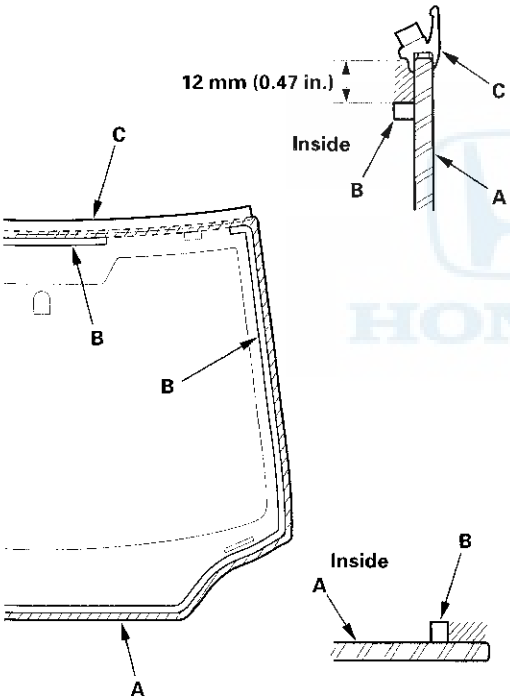

18. Carefully apply a light coat of body primer with a sponge applicator to any exposed paint or metal around the flange where the new adhesive will be applied. Let the primer dry for at least 10 minutes:

- Do not apply body primer to any remaining original adhesive on the flange.
- Be careful not to mix up the body and the glass primer sponge applicators.
- Never touch the primed surfaces with your hands.

: Apply body primer to exposed paint as shown.

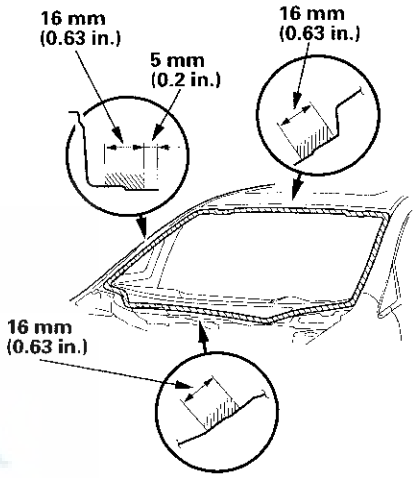

19. Cut a "V" in the end of the nozzle (A) on the adhesive cartridge as shown.

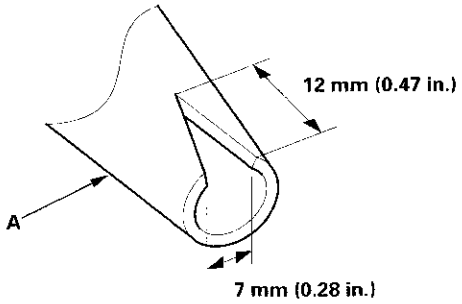

(cont'd)

Windshield Replacement (cont'd)

20. Put the cartridge in a caulking gun, and run a continuous bead of adhesive (A) around the edge of the windshield (B) between the dams (C) and the molding (D) as shown. Apply the adhesive within 30 minutes after applying the glass primer. Make a slightly thicker bead at each corner.

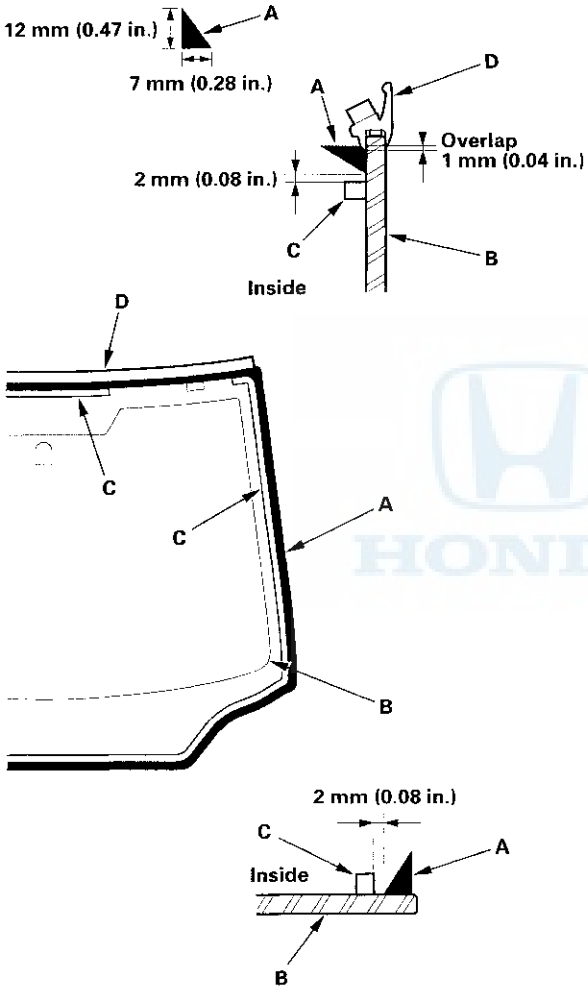

21. Pull out the glass side adhesive backing away from the lower rubber dam.

22. Hold the windshield with suction cups over the opening, align it with the alignment marks made in step 15, and set it down on the adhesive. Lightly push on the windshield until its edges are fully seated on the adhesive all the way around.

    NOTE: Do not open or close any of the doors for about an hour until the adhesive is dry.

23. Scrape or wipe off the excess adhesive with a putty knife or towel. To remove the adhesive from a painted surface or the windshield, wipe with a soft shop towel dampened with isopropyl alcohol.

24. After the adhesive has dried, spray water over the windshield and check for leaks. Mark the leaking areas, let the windshield dry, then seal with sealant:

    NOTE: Let the vehicle stand for at least 4 hours after windshield installation. If the vehicle has to be used within the first 4 hours, it must be driven slowly.

25. Reinstall all remaining removed parts.

    NOTE: Advise the customer not to do the following things for 2 to 3 days:
    - Slam the doors with all the windows rolled up.
    - Twist the body excessively (such as when going in and out of driveways at an angle or driving over rough, uneven roads).

Front Corner Glass Replacement

NOTE:
- Put on gloves to protect your hands.
- Wear eye protection while cutting the glass adhesive.
- Use seat covers to avoid damaging any surface.

1. Remove the A-pillar trim (see page 20-57).

2. From inside the vehicle, cut through the front corner glass adhesive (A) with a utility knife (B) all the way around. Apply protective tape along the edge of the entire front corner glass opening flange.

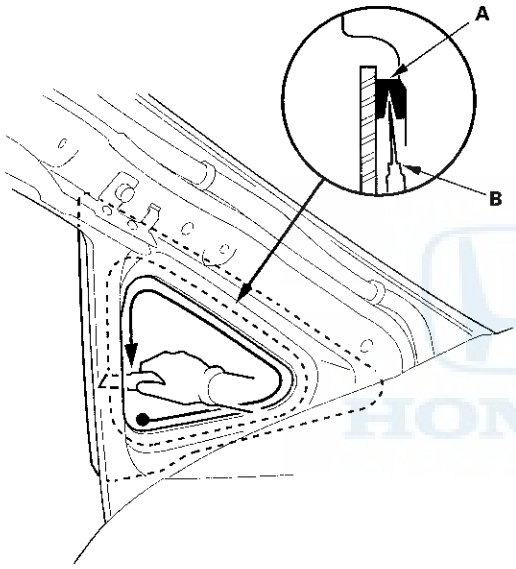

3. From outside the vehicle, pry the front corner glass clips (A) and the front corner trim clips (B), then carefully remove the glass (C) and the trim (D) together. The trim is not attached to the glass.

Fastener Locations

A ▷ : Clip, 2 B ▷ : Clip, 2

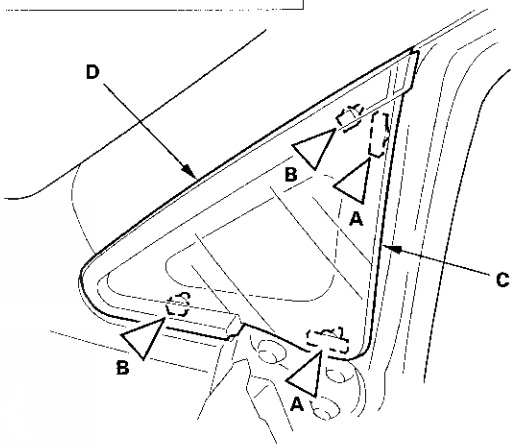

(cont'd)

Front Corner Glass Replacement (cont'd)

4. Scrape smooth the old adhesive, using a putty knife or similar tool, until there is a thickness of about 2 mm (0.08 in.) on the bonding surface around the entire front corner glass opening flange:

   - Do not scrape down to the painted surface of the body; damaged paint will interfere with proper bonding.
   - If any of the clips are broken, remove them from the body.

5. Clean the body bonding surface with a shop towel dampened in isopropyl alcohol. After cleaning, keep oil, grease, and water from getting on the surface.

6. If the old front corner glass will be reinstalled, scrape off the old adhesive with a putty knife from the front corner glass. Clean the bonding surfaces on the inside face of the front corner glass and the edge of the glass with isopropyl alcohol. Make sure the bonding surface is kept free of water, oil, and grease.

7. Attach the rubber dam (A) and the clips (B) with adhesive tape to the inside face of the front corner glass (C) as shown.
   Be careful not to touch the front corner glass where the adhesive will be applied.

   Rubber dam adhesive tape:
   Thickness 0.16 mm (0.006 in.)
   Width 3 mm (0.12 in.)
   Clip adhesive tape:
   Thickness 1.2 mm (0.047 in.)
   Width 9 mm (0.35 in.)

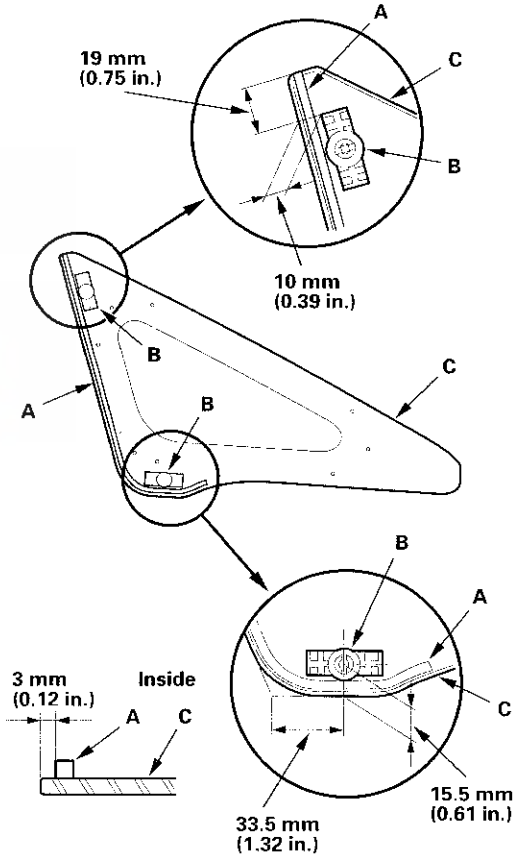

8. Apply a light coat of glass primer with a sponge applicator to the inside face of the front corner glass (A) as shown, then lightly wipe it off with a gauze or cheesecloth:

   - With the printed dots (B) on the front corner glass as a guide, apply the glass primer to both lower corner portions of the front corner glass.
   - Do not apply body primer to the front corner glass, and do not get the body and the glass primer sponge applicators mixed up.
   - Never touch the primed surfaces with your hands. If you do the adhesive may not bond to the front corner glass properly, causing a leak after the front corner glass is installed.
   - Keep water, dust, and abrasive materials away from primed surfaces.

: Apply glass primer here.

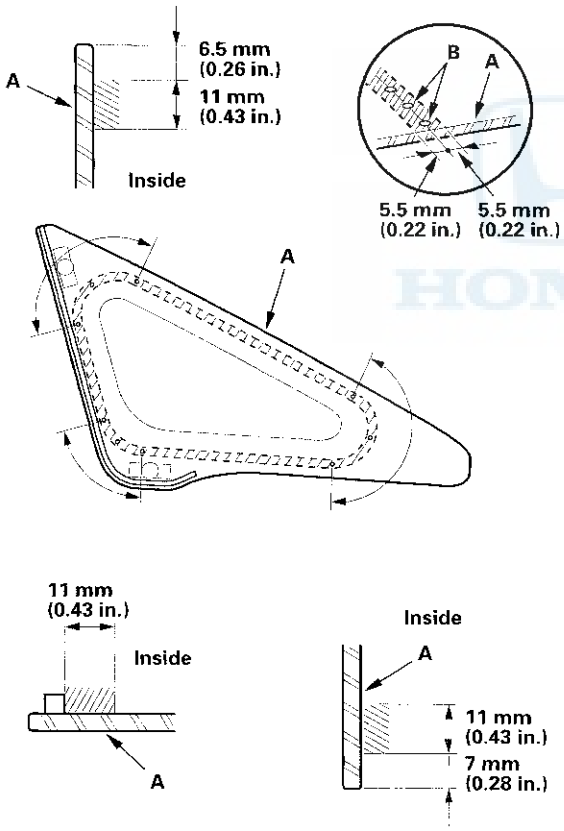

9. Carefully apply a light coat of body primer with a sponge applicator to any exposed paint or metal around the flange where the new adhesive will be applied. Let the primer dry for at least 10 minutes:

   - Do not apply body primer to any remaining original adhesive on the flange.
   - Be careful not to mix up the body and the glass primer sponge applicators.
   - Never touch the primed surfaces with your hands.
   - Mask off the dashboard before painting the flange.

: Apply body primer here.

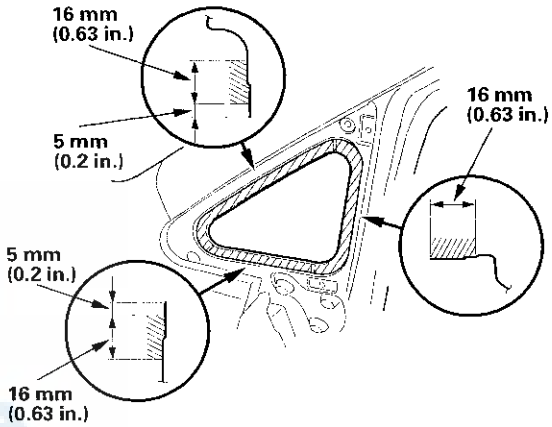

10. Cut a "V" in the end of the nozzle (A) on the adhesive cartridge as shown.

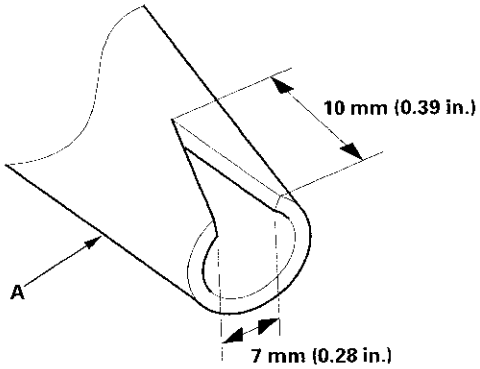

(cont'd)

Front Corner Glass Replacement (cont'd)

11. Put the cartridge in a caulking gun, and run a continuous bead of adhesive (A) around the front corner glass (B) as shown:

    - With the printed dots (C) on the front corner glass as a guide, apply the adhesive to both side portions of the front corner glass.
    - Apply the adhesive within 30 minutes after applying the glass primer. Make a slightly thicker bead at each corner.

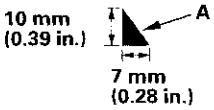

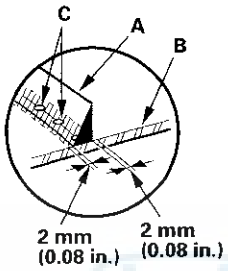

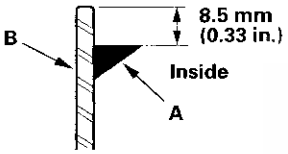

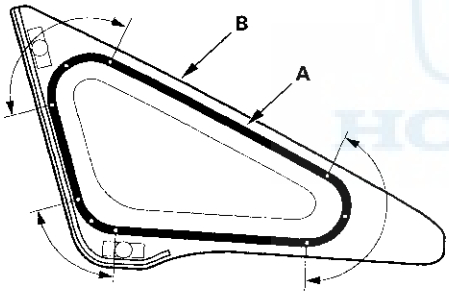

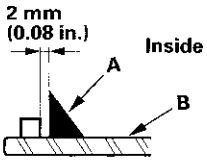

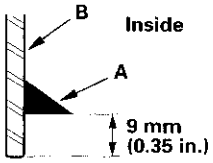

12. Set the front corner glass (A) to the front corner trim (B) quickly. Be careful not to touch the adhesive.

    NOTE: Make sure there is no clearance between the glass and the front lower sash.

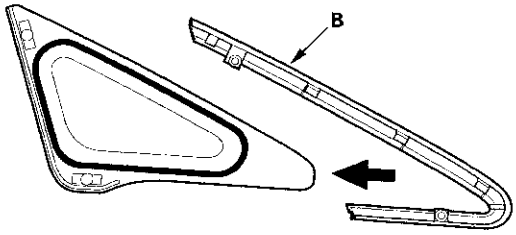

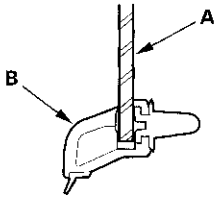

13. Hold the front corner glass (A) with a suction cup over the opening while holding the front corner trim (B) by the other hand, align the clips, and set it down on the adhesive. Lightly push on the front corner glass until its edges are fully seated on the adhesive all the way around.

    NOTE: Do not open or close any of the doors for about an hour until the adhesive is dry.

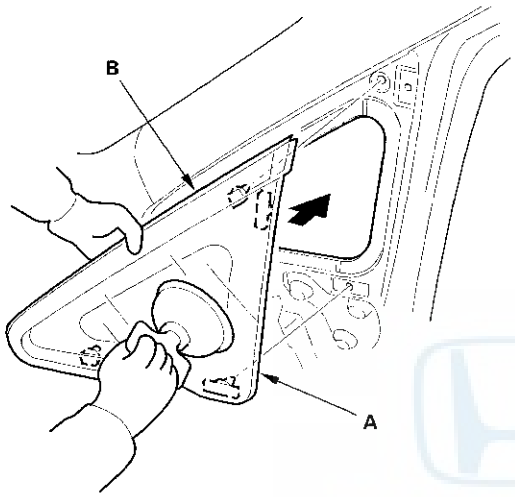

14. Scrape or wipe the excess adhesive off with a putty knife or towel. To remove the adhesive from a painted surface or the front corner glass, wipe with a soft shop towel dampened with isopropyl alcohol.

15. After the adhesive has dried, spray water over the corner glass and check for leaks. Mark the leaking areas, let the corner glass dry, then seal with sealant. Let the vehicle stand for at least 4 hours after corner glass installation. If the vehicle has to be used within the first 4 hours, it must be driven slowly.

16. Reinstall all remaining removed parts.

    NOTE: Advise the customer not to do the following things for 2 to 3 days:
    - Slam the doors with all the windows rolled up.
    - Twist the body excessively (such as when going in and out of driveways at an angle or driving over rough, uneven roads).

Rear Window Replacement

NOTE:
- Put on gloves to protect your hands.
- Wear eye protection while cutting the glass adhesive with a piano wire.
- Use seat covers to avoid damaging any surfaces.
- Do not damage the rear window defogger grid lines, window antenna grid lines, and terminals.

1. Remove these items:
    - Trunk lid
    - C-pillar trim (see page 20-63)
    - Rear shelf (see page 20-66)

2. Disconnect the rear window defogger connectors (A).

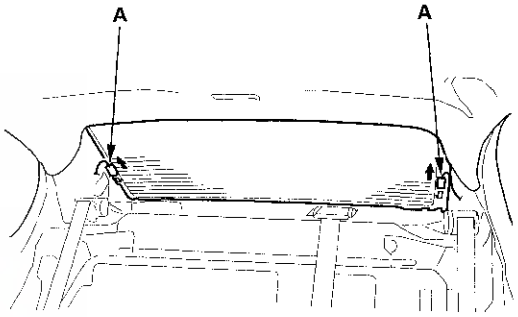

3. If the old rear window will be reinstalled, make alignment marks across the glass and the body with a grease pencil.

(cont'd)

Rear Window Replacement (cont'd)

4. Pull down the rear portion of the headliner (A) by detaching the clips. Take care not to bend the headliner excessively, or you may crease or break it.

Fastener Locations

▷ : Clip, 2

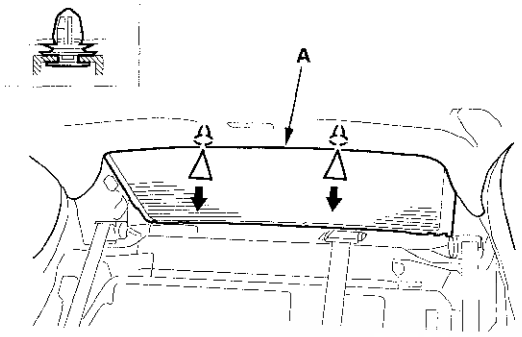

5. Apply protective tape along the inside and the outside edges of the body. Make a hole with an awl through the adhesive from inside the vehicle at a corner of the rear window. Push a piece of piano wire through the hole, and wrap each end around a piece of wood.

6. Remove the lower rubber dam (A) from the lower edge of the rear window (B). If necessary, cut the molding with a utility knife.

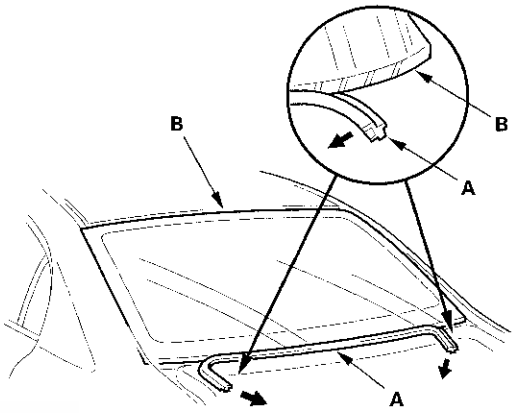

7. With a helper on the outside, pull the piano wire (A) back and forth in a sawing motion. Hold the piano wire as close to the rear window (B) as possible to prevent damage to the body, and carefully cut through the adhesive (C) around the entire rear window.

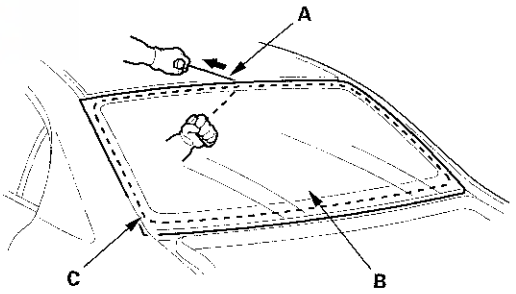

Cutting positions

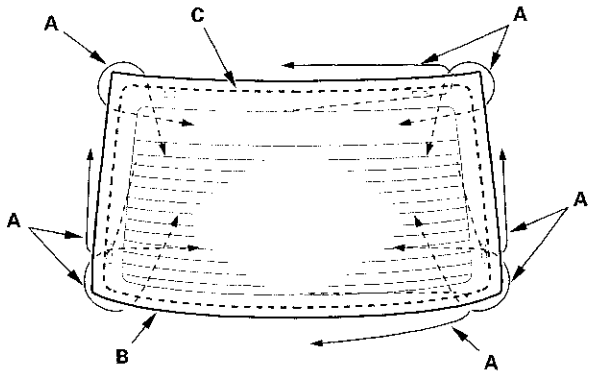

8. Carefully remove the rear window.

9. Scrape smooth the old adhesive, using a putty knife or similar tool, until there is a thickness of about 2 mm (0.08 in.) on the bonding surface around the entire rear window opening flange:

   - Do not scrape down to the painted surface of the body; damaged paint will interfere with proper bonding.
   - Remove the fasteners from the body.

10. Clean the body bonding surface with a shop towel dampened in isopropyl alcohol. After cleaning, keep oil, grease, and water from getting on the surface.

11. If the old rear window will be reinstalled, scrape off the old adhesive, the fasteners, and the rubber dam from the rear window with a putty knife. Clean the bonding surfaces on the inside face and the edge of the rear window with isopropyl alcohol. Make sure the bonding surface is kept free of water, oil, and grease.

12. Apply primer to the edge of the rear window (A) where the lower rubber dam adhesive tape will be attached as shown. Attach the lower rubber dam (B) with adhesive tape (C) to the lower edge of the rear window:

    - After installing the rubber dam, cut the ends (D) of the rubber dam with a utility knife as shown.
    - Be careful not to touch the windshield where adhesive will be applied.

Molding adhesive tape:
Thickness 0.2 mm (0.008 in.)
Width 4 mm (0.16 in.)

: Apply primer here.

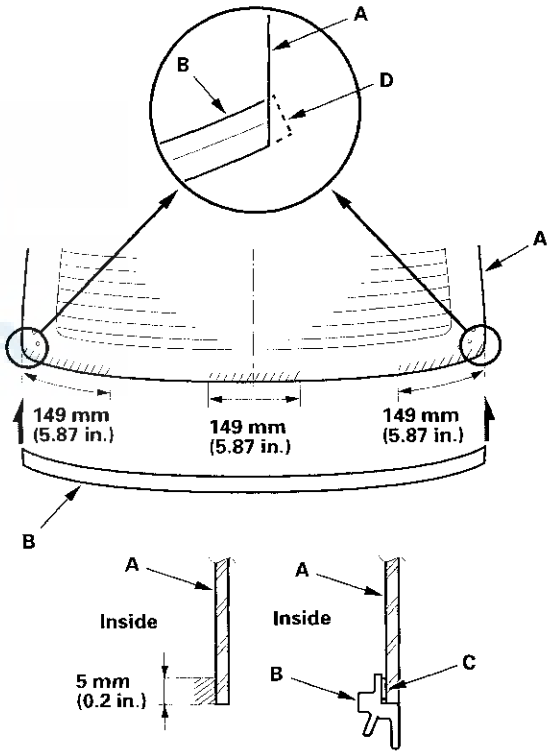

(cont'd)

Rear Window Replacement (cont'd)

13. Attach the upper rubber dams (A), side rubber dams (B), clips (C), and side fasteners (D) with adhesive tape to the inside face of the rear window (E) as shown:

    - First attach the upper rubber dam, then attach the side rubber dams around the edge of the rear window. Be sure the top of the side rubber dam contacts with the bottom of the upper rubber dam. If necessary, cut the rubber dam with a utility knife.
    - Be sure the clips, and fasteners line up with the alignment marks (F).
    - Be careful not to touch the rear window where adhesive will be applied.

    Rubber dams adhesive tape:
    Thickness 0.16 mm (0.006 in.)
    Width 5 mm (0.2 in.)
    Clips adhesive tape:
    Thickness 0.4 mm (0.016 in.)
    Width 13 mm (0.51 in.)
    Side fasteners adhesive tape:
    Thickness 0.8 mm (0.03 in.)
    Width 7 mm (0.28 in.)

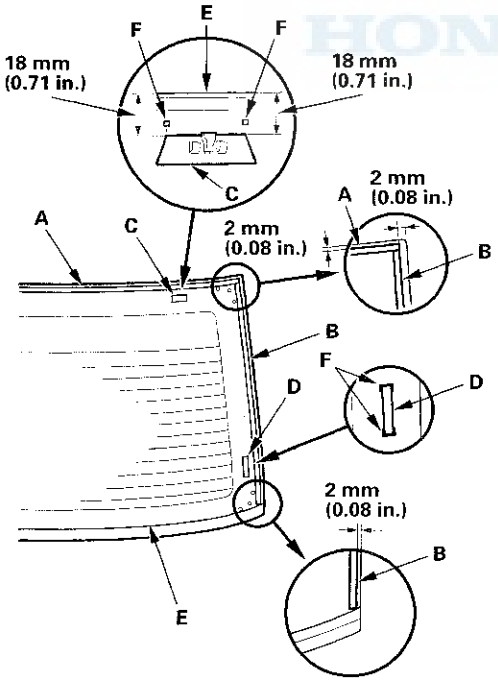

14. Attach the fasteners with adhesive tape to the rear window opening flange of the body on both sides.

    Fasteners adhesive tape:
    Thickness 0.8 mm (0.031 in.)
    Width 9 mm (0.35 in.)

    Fastener Locations
    ▷ : **Fastener, 2**

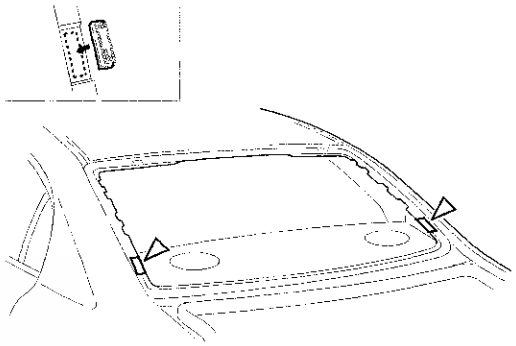

15. Set the rear window in the opening, and center it. Make alignment marks (A) across the rear window and the body with a grease pencil at the four points are shown:

    - Make sure both clips (B) are in the body holes.
    - Be careful not to touch the rear window where the adhesive will be applied.

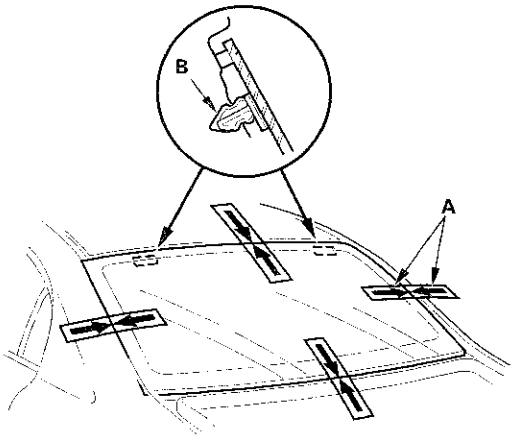

16. Remove the rear window.

17. Apply a light coat of glass primer with a sponge applicator along the edge of the rear window (A) between the dams (B) as shown, then lightly wipe it off with a gauze or cheesecloth:

- With the printed dots (C) on the rear window as a guide, apply the glass primer to both lower corner portions of the rear window.
- Do not apply body primer to the rear window, and do not get the body and the glass primer sponge applicators mixed up.
- Never touch the primed surfaces with your hands. If you do, the adhesive may not bond to the rear window properly, causing a leak after the rear window is installed.
- Keep water, dust, and abrasive materials away from primed surfaces.

: Apply glass primer here.

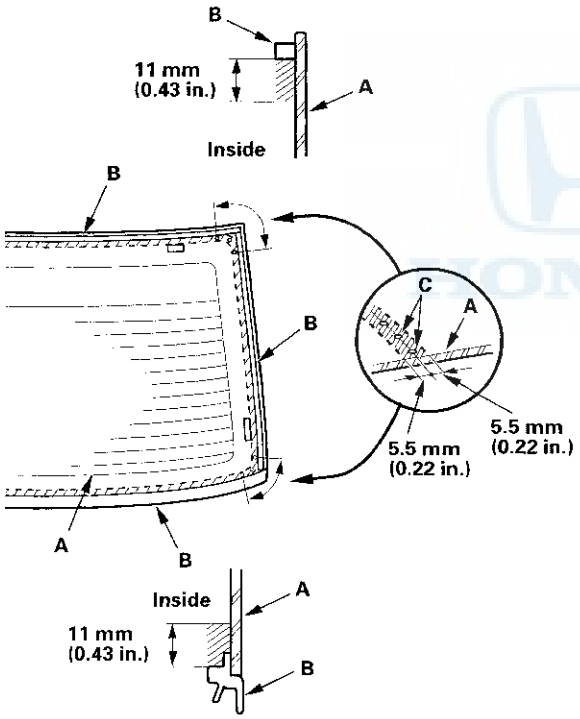

18. Carefully apply a light coat of body primer with a sponge applicator to any exposed paint or metal around the flange where the new adhesive will be applied. Let the primer dry for at least 10 minutes:

- Do not apply body primer to any remaining original adhesive on the flange.
- Be careful not to mix up the body and the glass primer sponge applicators.
- Never touch the primed surfaces with your hands.

: Apply body primer to exposed point as shown.

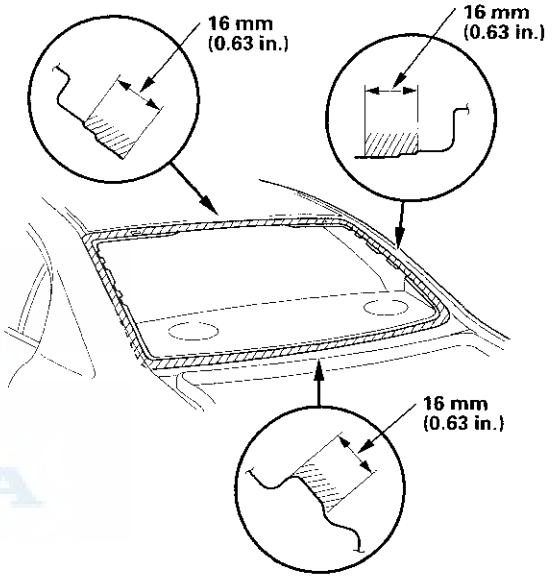

19. Cut a "V" in the end of the nozzle (A) on the adhesive cartridge as shown.

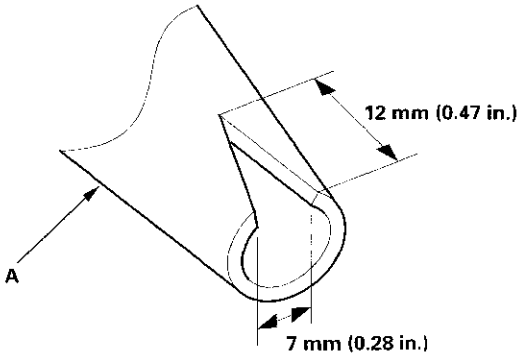

(cont'd)

Rear Window Replacement (cont'd)

20. Put the cartridge in a caulking gun, and run a continuous bead of adhesive (A) around the edge of the rear window (B) between the dams (C) as shown:

    - With the printed dots (D) on the rear window as a guide, apply the adhesive to both side portions of the rear window.
    - Apply the adhesive within 30 minutes after applying the glass primer. Make a slightly thicker bead at each corner.

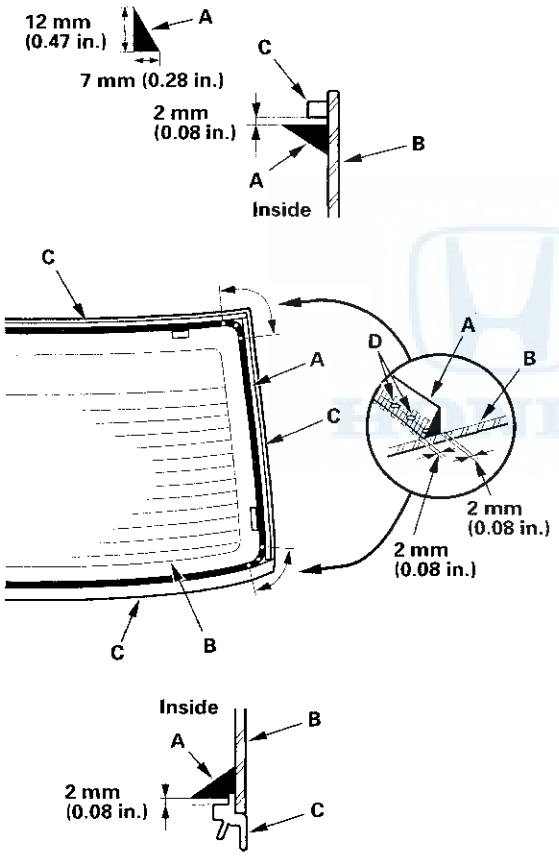

21. Hold the rear window with suction cups over the opening, align it with the alignment marks you made in step 15, and set it down on the adhesive. Lightly push on the rear window until its edges are fully seated on the adhesive all the way around.

    NOTE: Do not open or close any of the doors for about an hour until the adhesive is dry.

22. Scrape or wipe off the excess adhesive with a putty knife or towel. To remove the adhesive from a painted surface or the rear window, use a soft shop towel dampened with isopropyl alcohol.

23. After the adhesive has dried, spray water over the rear window and check for leaks. Mark the leaking areas, let the rear window dry, then seal with sealant. Let the vehicle stand for at least 4 hours after rear window installation. If the vehicle has to be used within the first 4 hours, it must be driven slowly.

24. Reinstall all remaining removed parts.

    NOTE: Advise the customer not to do the following things for 2 to 3 days:
    - Slam the doors with all the windows rolled up.
    - Twist the body excessively (such as when going in and out of driveways at an angle or driving over rough, uneven roads).

Component Location Index

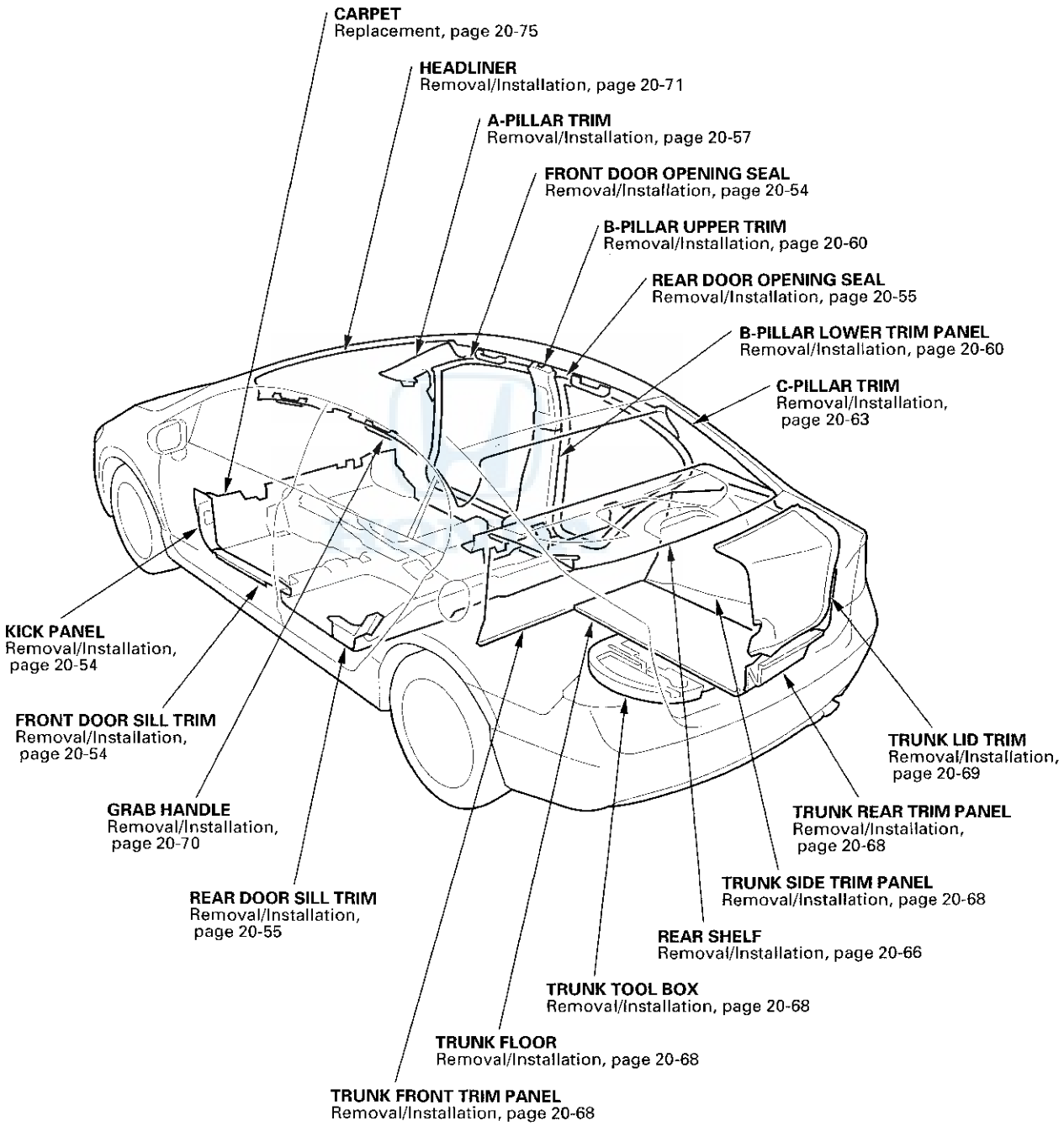

Trim Removal/Installation - Door Areas

Special Tools Required
KTC trim tool set SOJATP2014 *
* Available through the Honda Tool and Equipment Program; call 888-424-6857

Front Door Sill Area

NOTE:
- Put on gloves to protect your hands.
- Take care not to bend or scratch the trim and the panels.
- Use the appropriate tool from the KTC trim tool set to avoid damage when removing components.

1. Driver's side: Remove the footrest (see step 4 on page 20-76).

2. Driver's side: Remove the front side cap from the front door sill trim, and remove the trunk lid/fuel fill door opener lock cylinder and the screw (see page 20-159).

3. Detach the hooks (A) and the tabs (B) from the kick panel (C) and the B-pillar lower trim (D), and pull the front door sill trim (E) up by hand to detach the clips (F, G), then remove it.

Driver's side

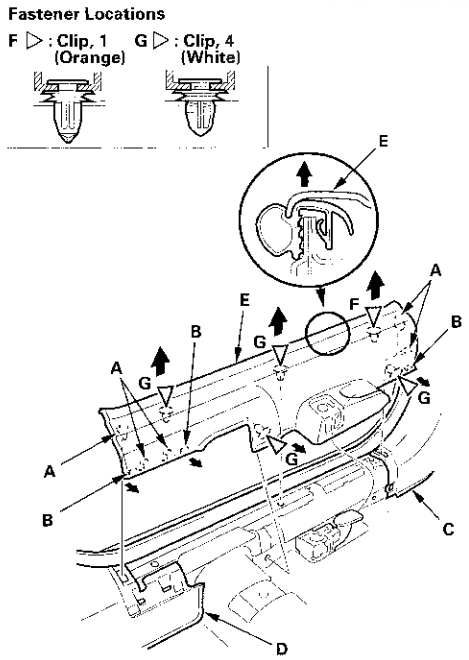

Passenger's side

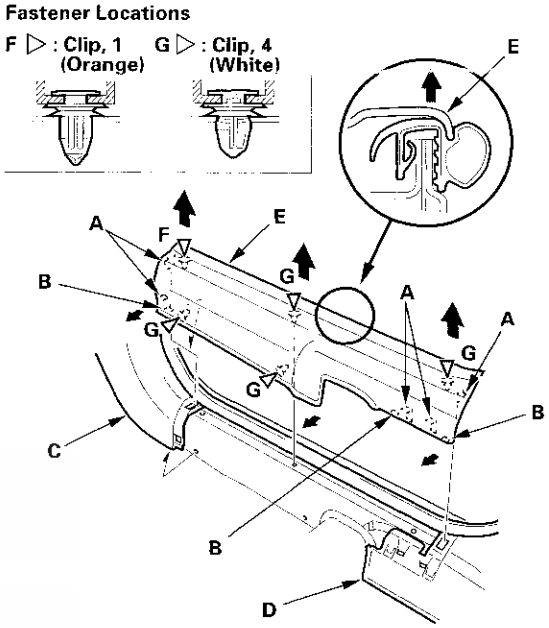

4. Pull out the front door opening seal (A) from the trim hooks (B) and around the front door opening flange, then remove the seal.

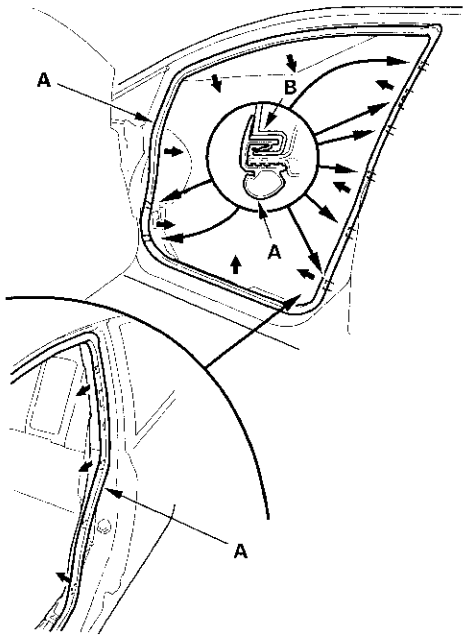

5. Pull the driver's kick panel (A) or the passenger's kick panel (B) back by hand to detach the clips (C, D), then remove them.

Driver's side

Fastener Locations

C ▷ : Clip, 2

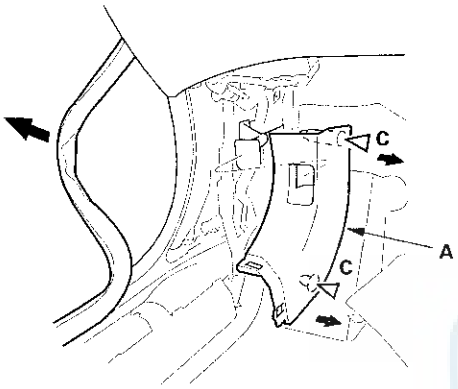

Passenger's side

Fastener Locations

C ▷ : Clip, 1 D ▷ : Clip, 1

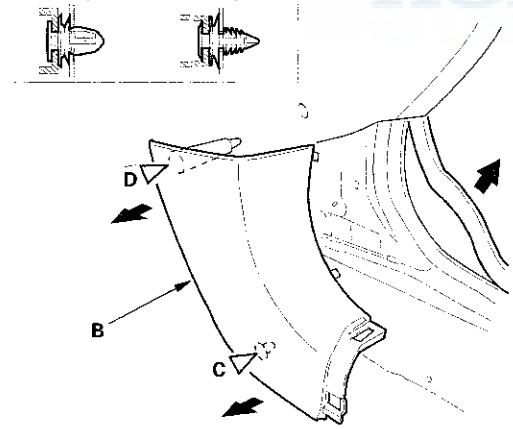

6. Install the trim in the reverse order of removal, and note these items:

- If the clips are damaged or stress-whitened, replace them with new ones.
- Push the clips and the hooks into place securely.

Special Tools Required

KTC trim tool set SOJATP2014 *

* Available through the Honda Tool and Equipment Program; call 888-424-6857

Rear Door Sill Area

NOTE:

- Put on gloves to protect your hands.
- Take care not to bend or scratch the trim and the panels.
- Use the appropriate tool from the KTC trim tool set to avoid damage when removing components.

1. Detach the hook (A) and the tab (B) from the B-pillar lower trim (C), and pull the rear door sill trim (D) up by hand to detach the clips, then remove it.

Fastener Locations

▷ : Clip, 2 (White)

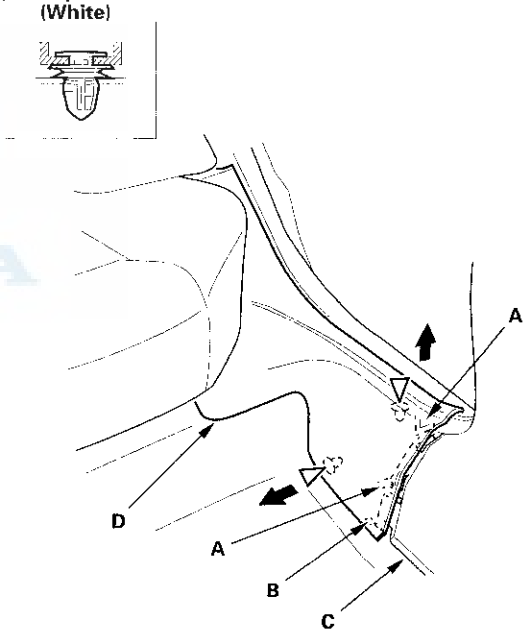

(cont'd)

Trim Removal/Installation - Door Areas (cont'd)

2. Pull the rear seat cushion (A) up to release the hook (B). While pulling the cushion up, detach the clips and remove the rear door sill trim (C) from the rear door opening seal (D).

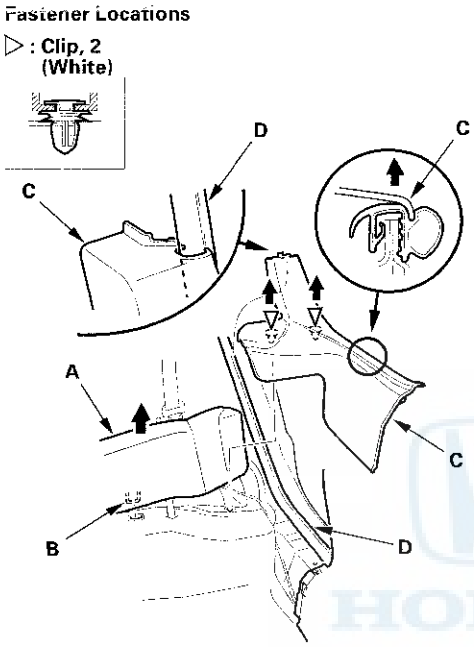

3. Pull out the rear door opening seal (A) from the trim hooks (B) and around the rear door opening flange, then remove the seal.

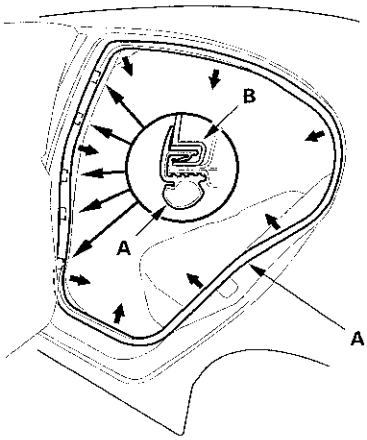

4. Install the trim in the reverse order of removal, and note these items:

   - If the clips are damaged or stress-whitened, replace them with new ones.
   - Push the clips and the hooks into place securely.

Trim Removal/Installation - Pillar Areas

Special Tools Required
KTC trim tool set SOJATP2014 *
* Available through the Honda Tool and Equipment Program; call 888-424-6857

A-Pillar Trim

SRS components are located in this area. Review the SRS component locations (see page 24-11) and the precautions and procedures (see page 24-13) before doing repairs or service.

NOTE:
- Follow the A-pillar trim installation procedure carefully; improper installation could cause the side curtain airbag to deploy improperly and possibly cause injury.
- Put on gloves to protect your hands.
- Use the appropriate tool from the KTC trim tool set to avoid damage when removing components.
- Take care not to scratch the trim and the panels.
- The upper clip in the A-pillar trim (A) consists of a grommet (B) and a pin (C). The grommet expanded with the pin secures it to the body panel (D). The projections (E) on the pin are broken during removal, so the clip must be replaced with a new one when the trim is reinstalled.

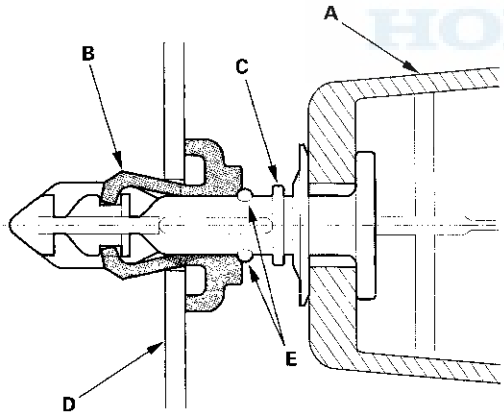

1. Pull the front door opening seal away from the A-pillar as needed (see step 4 on page 20-54).

2. Hit the upper clip in the A-pillar trim (A) with a rubber mallet. The clip is under the "SIDE CURTAIN AIRBAG" mark (B). Hitting the clip breaks the projections (C) on the pin (D) and pushes it into the grommet (E) on the body (F).

   NOTE: The clip must be replaced with a new one when the A-pillar trim is reinstalled.

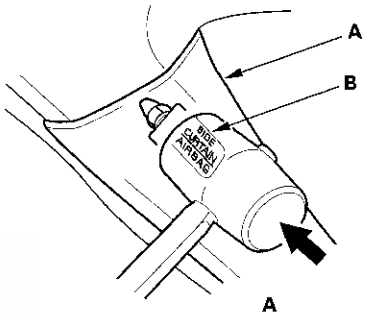

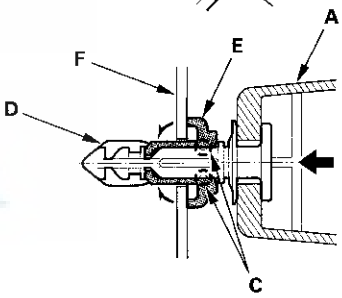

(cont'd)

Trim Removal/Installation - Pillar Areas (cont'd)

3. Pull the front of the A-pillar trim (A) back by hand to remove the upper clip (B) from the body (C).

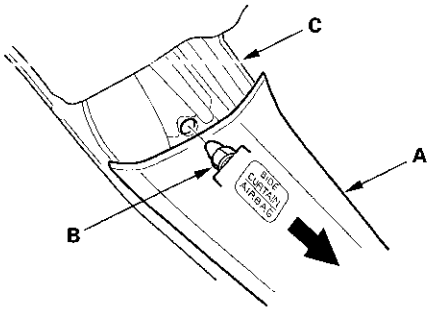

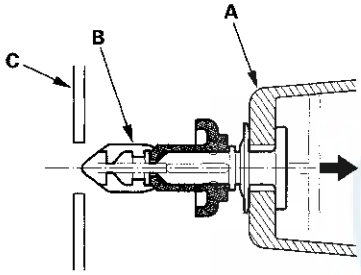

4. Pull the A-pillar trim (A) by hand to detach the clips. Pull the trim up from the dashboard (B), then remove it.

Fastener Locations

▷: **Clip, 2 (Black)**

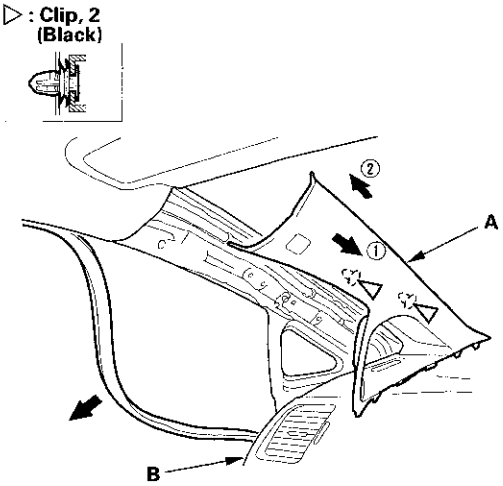

5. If the side curtain airbag has deployed, replace the A-pillar trim and all the clips on the trim with new ones (see page 24-181).

6. If the side curtain airbag has not deployed, remove the upper clip (A) from the removed A-pillar trim (B) and discard it. Then check the trim:

   - To prevent the side curtain airbags from deploying improperly and possibly causing injury, inspect the A-pillar trim and replace it if it has any of the following damage:
     - Any cracks, deformations, or stress-whitening in the A-pillar trim
     - Any cracks or stress-whitening in the clip seating surfaces (C, D)
   - Replace the lower clips (E) if they are damaged or stress-whitened.
   - Replace the upper clip with a new one.

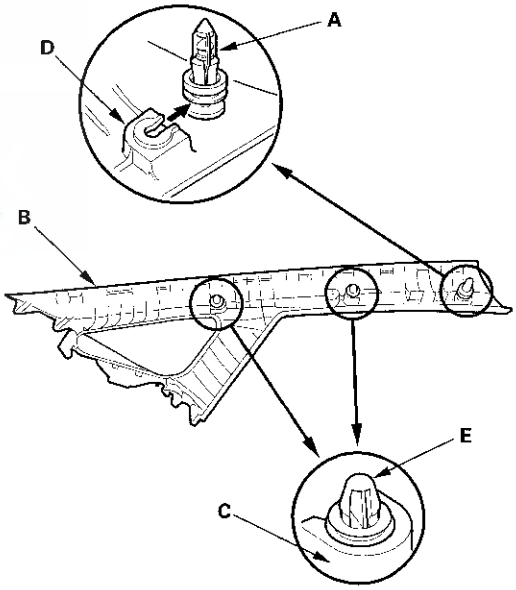

7. Before installing the A-pillar trim (A), whether it is being replaced or reinstalled, temporarily remove the new upper clip (B).

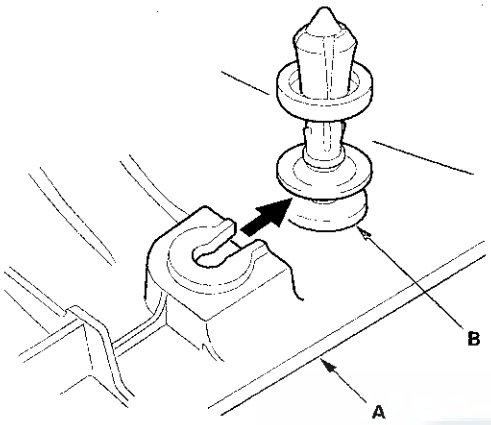

8. Check the overlap between the headliner and A-pillar trim, and if necessary, adjust it (see page 24-183).

9. Carefully install a new upper clip (A) to the A-pillar trim (B). Be sure that the grommet (C) is nearest to the top of the pin (D) as shown.

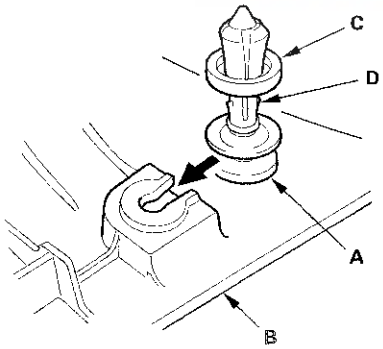

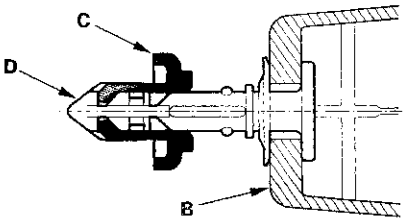

10. Reinstall the A-pillar trim (A).

-1 Insert the bottom of the trim into the dashboard (B).
-2 Place the trim over the A-pillar (C), and fit its upper clip (D), and the lower clips into the holes (E) in the A-pillar, then lightly push the trim into place.

NOTE:
- Make sure the side curtain airbag is not tucked under the clips or the trim ribs.
- Push lightly on the upper clip. If you push too hard, the clip will be damaged, and it will not hold the trim properly.

Fastener Locations

▷ : **Clip, 2 (Black)**

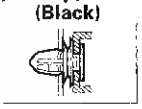

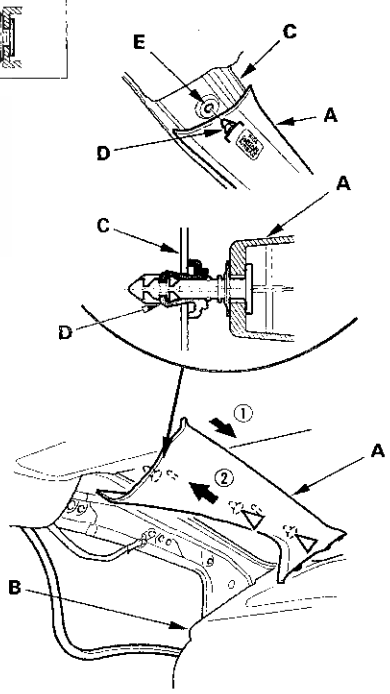

11. Reinstall the front door opening seal.

Interior Trim

Trim Removal/Installation - Pillar Areas (cont'd)

Special Tools Required
KTC trim tool set SOJATP2014 *
* Available through the Honda Tool and Equipment Program; call 888-424-6857

B-Pillar Upper/Lower Trim

SRS components are located in this area. Review the SRS component locations (see page 24-11) and the precautions and procedures (see page 24-13) before doing repairs or service.

NOTE:
- Put on gloves to protect your hands.
- Take care not to bend or scratch the trim and the panels.
- Use the appropriate tool from the KTC trim tool set to avoid damage when removing components.

1. Remove these items:
   - Front door sill trim (see page 20-54)
   - Rear door sill trim (see page 20-55)
   - Front door opening seal, as needed (see step 4 on page 20-54)
   - Rear door opening seal, as needed (see step 3 on page 20-56)
2. Slide the front seat forward fully.
3. Remove the B-pillar lower trim (A).
   1. Pull the upper portion of the trim back to release the upper hooks (B).
   2. Detach the lower clips by pulling the bottom of the trim back by hand.

Fastener Locations

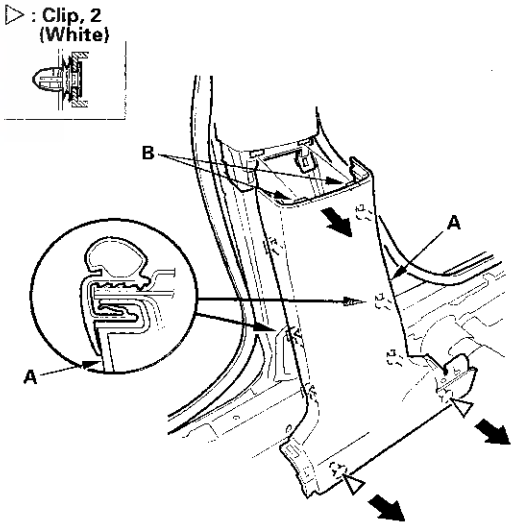

4. Remove the front seat belt lower anchor (see page 24-4).

5. Pull the bottom of the B-pillar upper trim (A) back by hand to detach the lower hooks (B).

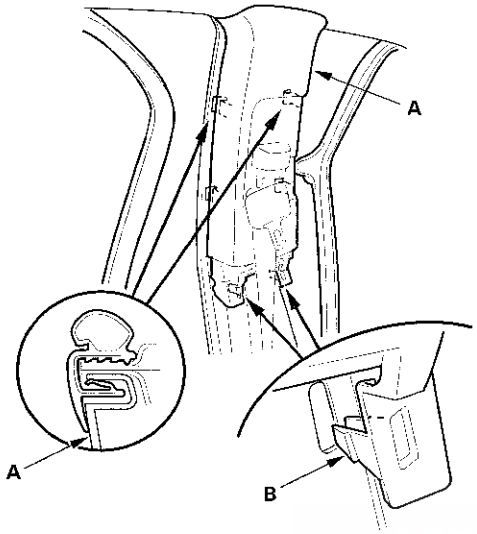

6. Detach the upper clip by pulling the top of the B-pillar upper trim (A). Pull the trim down to release the upper hooks (B) from the side curtain airbag B-pillar bracket (C).

Fastener Location

▷ : **Clip, 1 (Pink)**

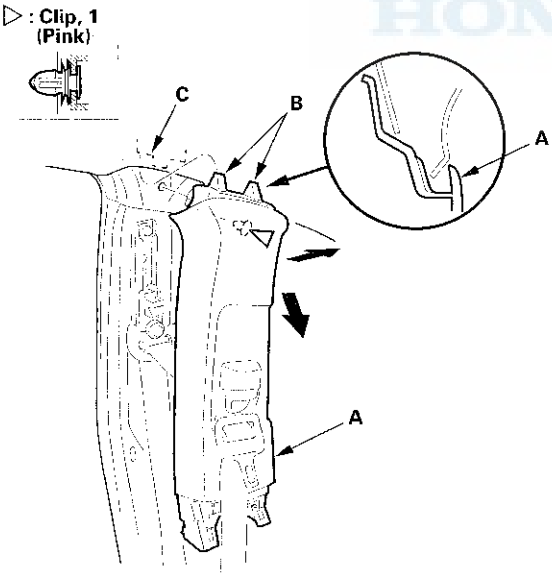

7. Pass the front seat belt (A) lower anchor out through a hole in the slider (B), then remove the B-pillar upper trim (C).

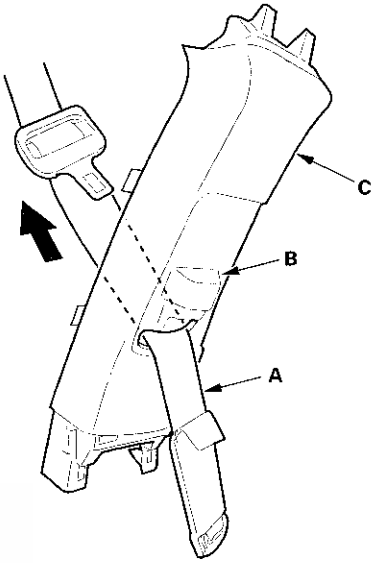

8. Remove the slider (A) from the B-pillar upper trim (B).

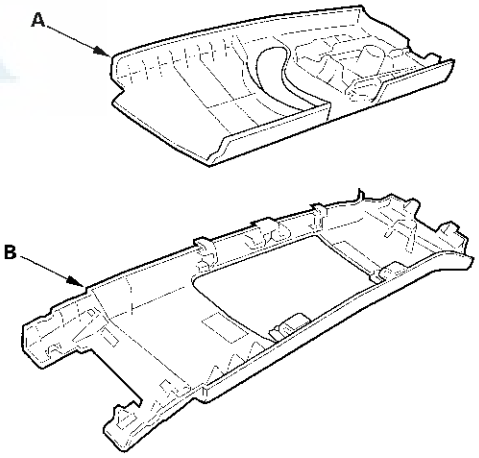

(cont'd)

Trim Removal/Installation - Pillar Areas (cont'd)

9. Install the trim in the reverse order of removal, and note these items:

   - If the clips (A) are damaged or stress-whitened, replace them with new ones.
   - If the side curtain airbag has deployed, replace the B-pillar upper and lower trim and all the clips on the trim with new ones (see page 24-181).
   - To prevent the side curtain airbags from deploying improperly and possibly causing injury, inspect the trim and replace it if it has any of the following damage:
     - Any cracks or deformations in the B-pillar upper trim (B) or the upper hooks (C), or any stress-whitening in the upper part of the trim
     - Any cracks or deformations in the B-pillar lower trim (D), or any breakage in the part (E) fitted with the B-pillar upper trim
     - Any cracks or stress-whitening in the clip seating surfaces (F)
   - Replace any damaged parts with new ones.
   - Make sure the top of the trim overlaps with the headliner correctly (see page 24-183).
   - Make sure the pin (G) on the front seat belt shoulder anchor adjuster (H) and the hole (I) on the back of the slider are engaged when installing the B-pillar upper trim.
   - Make sure the trim hook is installed into the side curtain airbag B-pillar bracket securely.
   - Push the clip and the hooks into place securely.
   - Before installing the anchor bolt, make sure there are no twists or kinks in the seat belt.

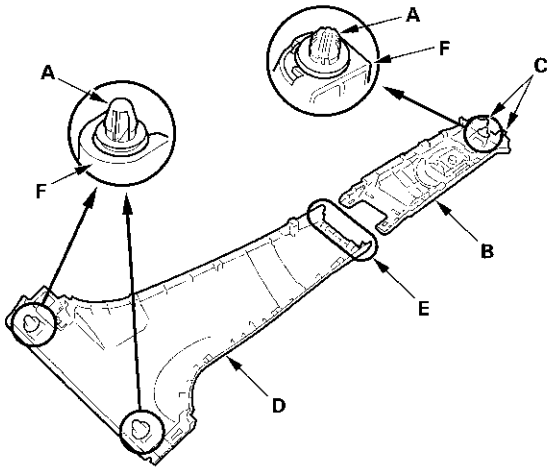

Slider engagement with shoulder anchor adjuster

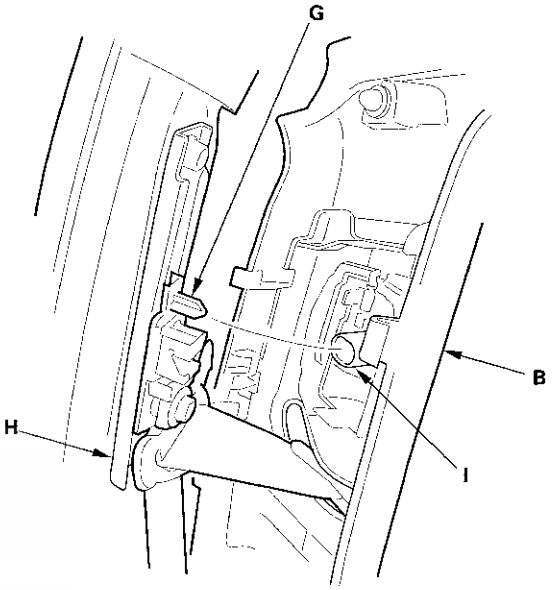

Special Tools Required
KTC trim tool set SOJATP2014 *
* Available through the Honda Tool and Equipment Program; call 888-424-6857

C-Pillar Trim

SRS components are located in this area. Review the SRS component locations (see page 24-11) and the precautions and procedures (see page 24-13) before doing repairs or service.

NOTE:
- Follow the C-pillar trim installation procedure carefully; improper installation could cause the side curtain airbag to deploy improperly and possibly cause injury.
- Put on gloves to protect your hands.
- Use the appropriate tool from the KTC trim tool set to avoid damage when removing components.
- Take care not to scratch the trim and the panels.
- The front clip in the C-pillar trim (A) consists of a grommet (B) and a pin (C). The grommet expanded with the pin secures it to the body panel (D). The projections (E) on the pin are broken during removal, so the clip must be replaced with a new one when the trim is reinstalled.

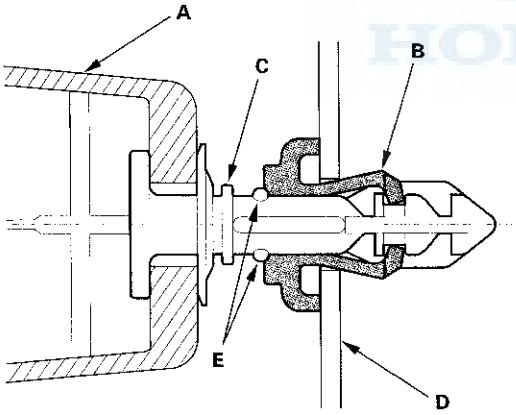

1. Remove these items:
   - Rear seat cushion (see page 20-118)
   - Rear seat-back (see page 20-118)
   - Rear door opening seal, as needed (see step 3 on page 20-56)

2. Hit the front clip in the C-pillar trim (A) with a rubber mallet. The clip is near the triangle mark (B). Hitting the clip breaks the projections (C) on the pin (D) and pushes it into the grommet (E) on the body (F).

   NOTE: The front clip must be replaced with a new one when the C-pillar trim is reinstalled.

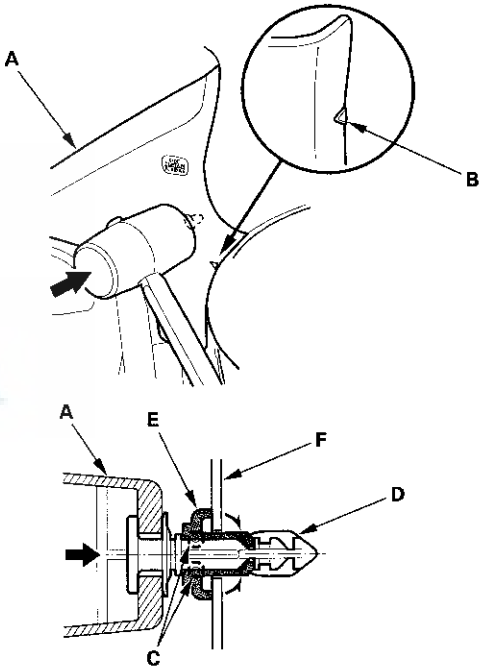

(cont'd)

Trim Removal/Installation - Pillar Areas (cont'd)

3. Pull the front of the C-pillar trim (A) back by hand to remove the front clip (B) from the body (C).

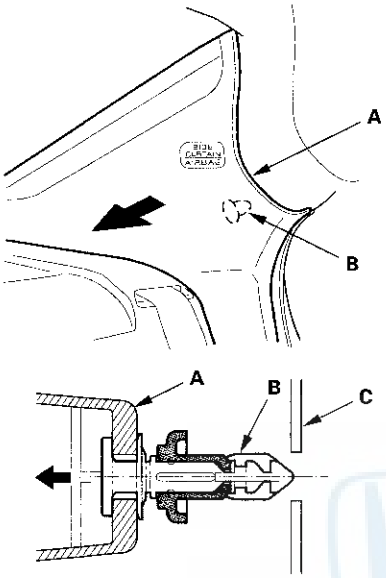

4. Pull the C-pillar trim (A) by hand to detach the clips, then pull the trim up from the rear shelf (B).

Fastener Locations

▷ : **Clip, 3 (Red)**

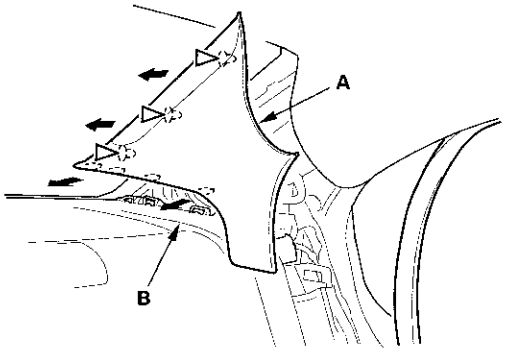

5. If the side curtain airbag has deployed, replace the C-pillar trim and all the clips on the trim with new ones (see page 24-181).

6. If the side curtain airbag has not deployed, remove the front clip (A) from the removed C-pillar trim (B) and discard it. Then check the trim:

   - To prevent the side curtain airbags from deploying improperly and possibly causing injury, inspect the C-pillar trim and replace it if it has any of the following damage:
     - Any cracks, deformations, or stress-whitening in the C-pillar trim
     - Any cracks or stress-whitening in the clip seating surfaces (C, D)
   - If the clips (E) are damaged or stress-whitened, replace them with new ones.
   - Replace the front clip with a new one.

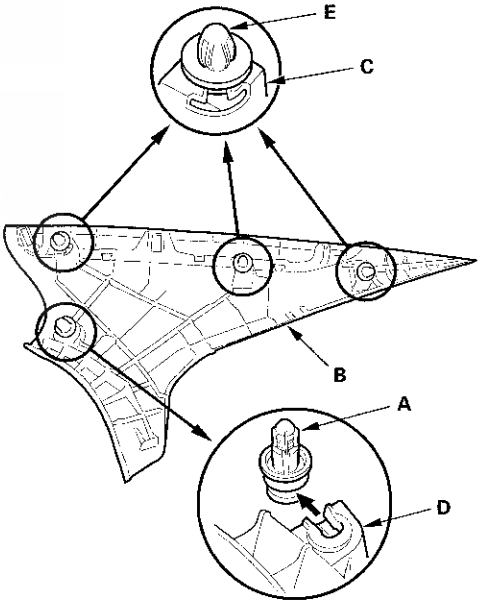

7. Before installing the C-pillar trim (A), whether it is being replaced or reinstalled, temporarily remove the new front clip (B).

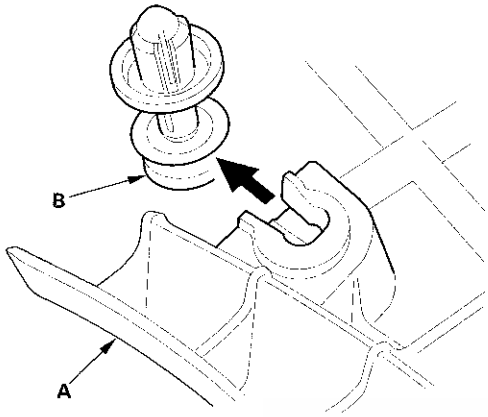

8. Check the overlap between the headliner and C-pillar trim, and if necessary, adjust it (see page 24-183).

9. Carefully reinstall the front clip (A) to the C-pillar trim (B). Be sure that the grommet (C) is nearest to the top of the pin (D) as shown.

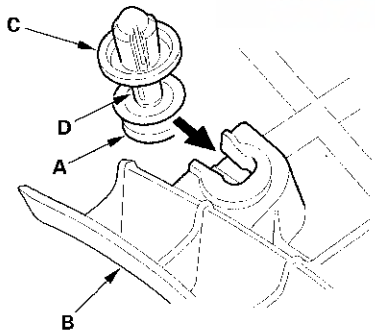

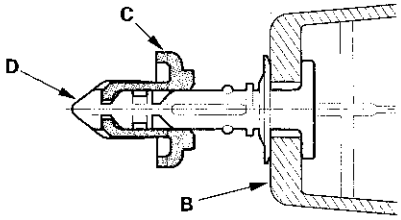

10. Reinstall the C-pillar trim (A).

-1 Insert the bottom of the trim into the rear shelf (B).
-2 Place the trim over the C-pillar (C), and fit its front clip (D) and the rear clips into the holes in the C-pillar, then lightly push the trim into place.

NOTE:
- Make sure the side curtain airbag is not tucked under the clips or the trim ribs.
- Push lightly on the front clip. If you push too hard, the clip will be damaged, and it will not hold the trim properly.

Fastener Locations

▷: **Clip, 3 (Red)**

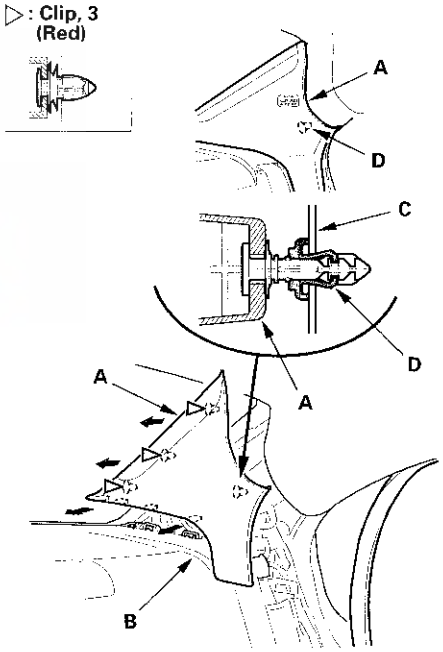

11. Reinstall the rear door opening seal.

12. Reinstall the rear seat-back (see page 20-118) and rear seat cushion (see page 20-118).

Trim Removal/Installation - Rear Shelf Area

Special Tools Required
KTC trim tool set SOJATP2014 *
* Available through the Honda Tool and Equipment Program; call 888-424-6857

Rear Shelf

SRS components are located in this area. Review the SRS component locations (see page 24-11) and the precautions and procedures (see page 24-13) before doing repairs or service.

NOTE:
- Put on gloves to protect your hands.
- Take care not to bend or scratch the rear shelf and trim.
- Use the appropriate tool from the KTC trim tool set to avoid damage when removing components.

1. Remove these items:
   - Rear seat cushion (see page 20-118)
   - Rear seat-back (see page 20-118)
   - Rear door opening seal, as needed (see page 20-55)
   - C-pillar trim, both sides (see page 20-63)
2. From the trunk compartment, disconnect the high mount brake light connector (A).

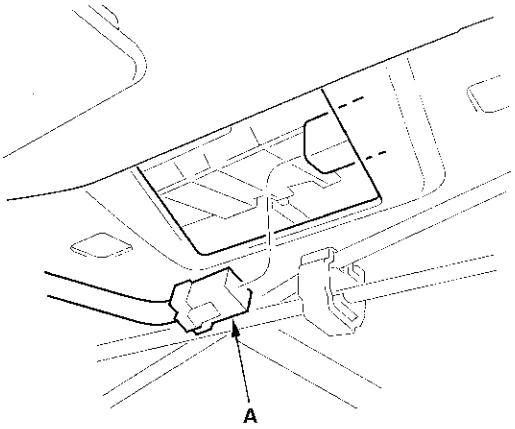

3. From the trunk compartment, release the six white clips by tapping on them.

Fastener Locations
▷ : **Clip, 6 (White)**

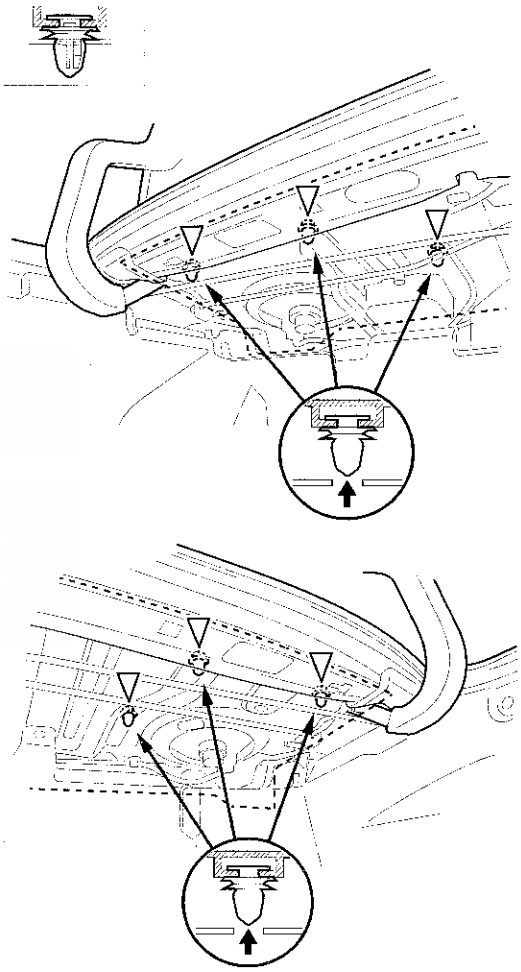

4. Lift the rear shelf (A) upward to detach the remaining four clips, and release the hook (B) from the rear shelf. Release the pin (C) from the hole on the body.

Fastener Locations

▷ : **Clip, 4 (White)**

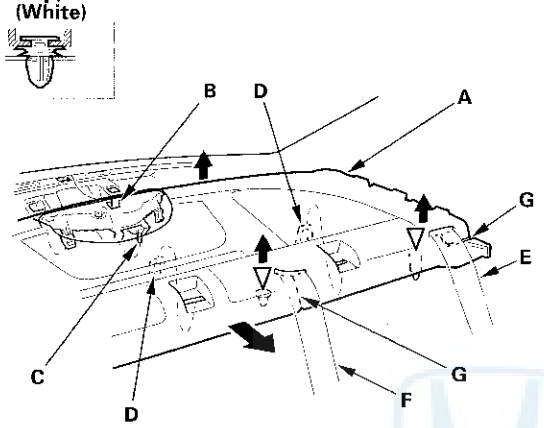

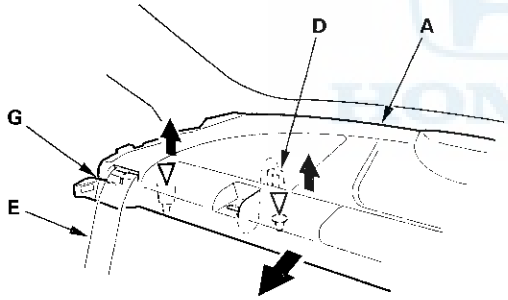

5. Release each tether anchor striker (D) out through the hole in the rear shelf, and pull both rear seat belts (E) and the rear center seat belt (F) out through the slits (G) in the rear shelf.

6. Install the shelf in the reverse order of removal, and note these items:

- If the clips are damaged or stress-whitened, replace them with new ones.
- When installing the rear shelf, slip the rear seat belt through the slit and the rear center seat belt into the lid opening in the rear shelf.
- Push the clips and the hooks into place securely.
- Make sure the high mount brake light connector is connected securely.

Trim Removal/Installation - Trunk Area

Special Tools Required
KTC trim tool set SOJATP2014 *
* Available through the Honda Tool and Equipment Program; call 888-424-6857

NOTE:
- Put on gloves to protect your hands.
- Take care not to bend or scratch the trim and the panels.
- Use the appropriate tool from the KTC trim tool set to avoid damage when removing components.

1. Remove the trunk floor (A).

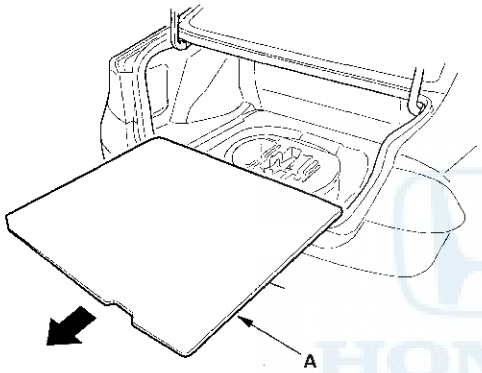

2. Remove the trunk lid weatherstrip near the trunk rear trim panel.

3. Detach the clips, and release the hooks (A) by pulling the trunk rear trim panel (B) up, then remove it.

Fastener Locations
▷ : **Clip, 4 (White)**

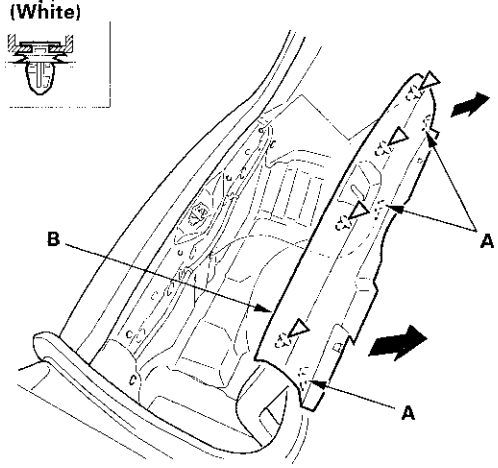

4. Remove the clips, then remove the trunk front trim panel (A) from the trunk compartment.

Fastener Locations
▷ : **Clip, 6**

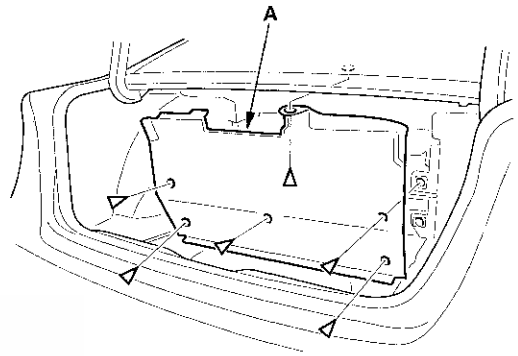

5. Remove the clips (A, B), then remove the trunk side trim panel (C). Release the wire harness (D) from the slit (E) in the trim panel.

Fastener Locations
A ▷ : **Clip, 3** B ▷ : **Clip, 1**

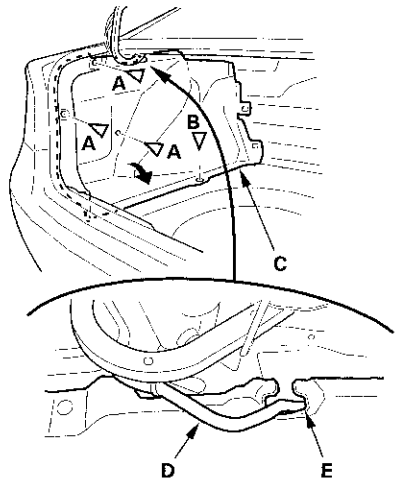

6. If necessary, remove the trunk tool box (A).

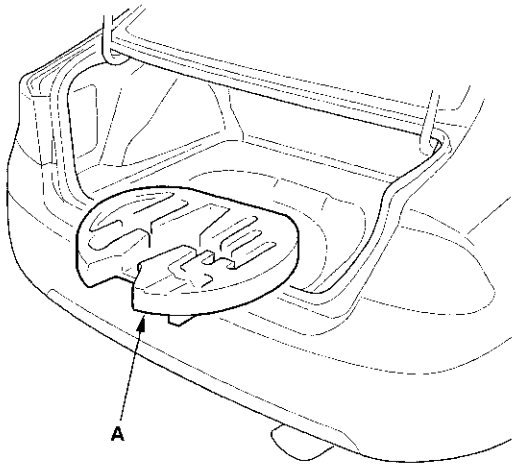

7. Install the trim in the reverse order of removal, and note these items:

   - If the clips are damaged or stress-whitened, replace them with new ones.
   - Push the clips into place securely.

Trim Removal/Installation - Trunk Lid

Special Tools Required
KTC trim tool set SOJATP2014 *
* Available through the Honda Tool and Equipment Program; call 888-424-6857

NOTE:
- Put on gloves to protect your hands.
- Take care not to bend or scratch the trim and the panels.
- Use the appropriate tool from the KTC trim tool set to avoid damage when removing components.

1. Remove the clips from both trunk lid hinge covers (A), then remove the covers.

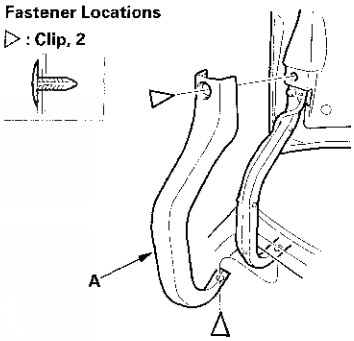

2. Remove the clips (A, B), then remove the trunk lid trim (C).

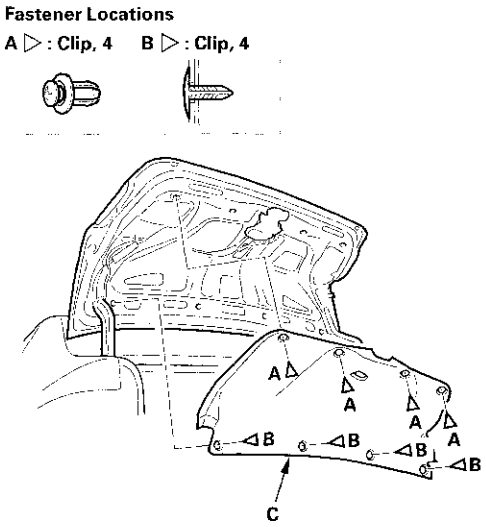

3. Install the trim in the reverse order of removal, and if the clips are damaged or stress-whitened, replace them with new ones.

Grab Handle Removal/Installation

Special Tools Required
KTC trim tool set SOJATP2014 *
* Available through the Honda Tool and Equipment Program; call 888-424-6857

NOTE: Use the appropriate tool from the KTC trim tool set to avoid damage when removing components.

1. Lower the grab handle (A), then pull out the stops (B).

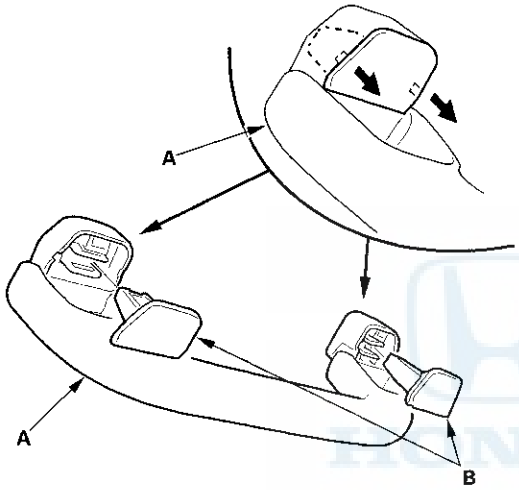

2. While pinching the clips (A), release the hooks (B), then remove the grab handle (C).

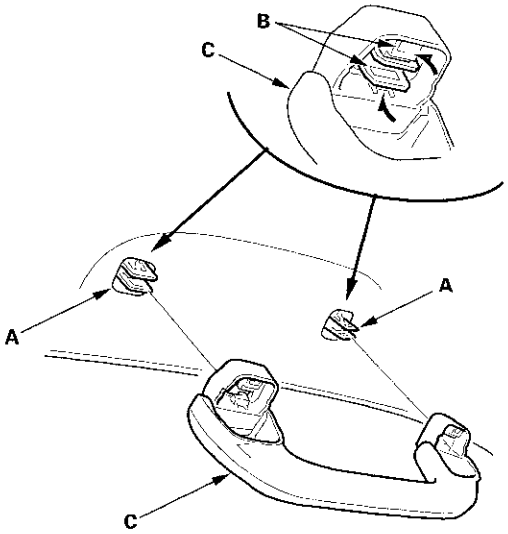

3. Remove all of the clips (A) by pinching the hooks with a pair of pliers.

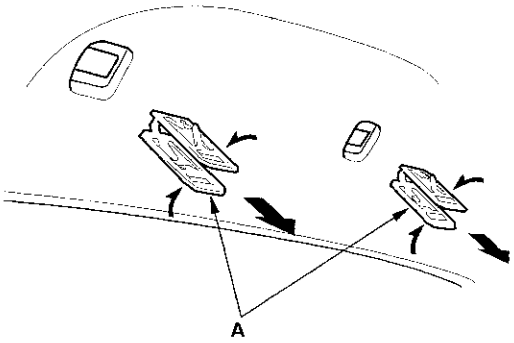

4. If the side curtain airbag has deployed, replace the grab handle with a new one.

5. If the side curtain airbag has not deployed, to prevent the side curtain airbags from deploying improperly and possibly causing injury, inspect the removed pieces and replace them if they have any the following of damage:

   - Any cracks or breakage in the grab handle (A).
   - Any cracks or stress-whitening in the stops (B).

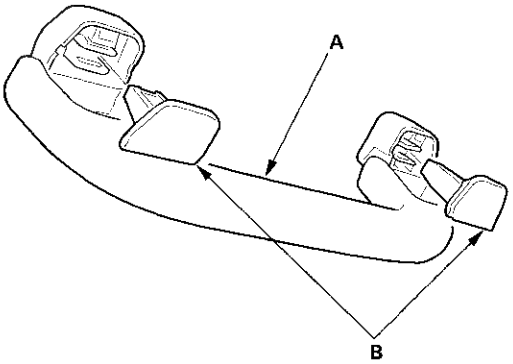

6. Install the clips (A) to the grab handle (B), then install the stops (C) fully into the clips.

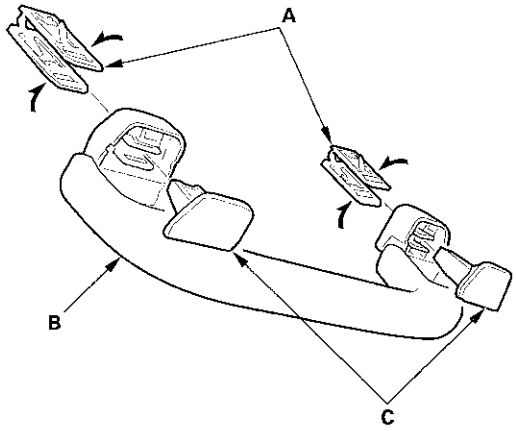

7. Position the grab handle (A) on the bracket (B), and push on the grab handle until the clips (C) snap into place securely.

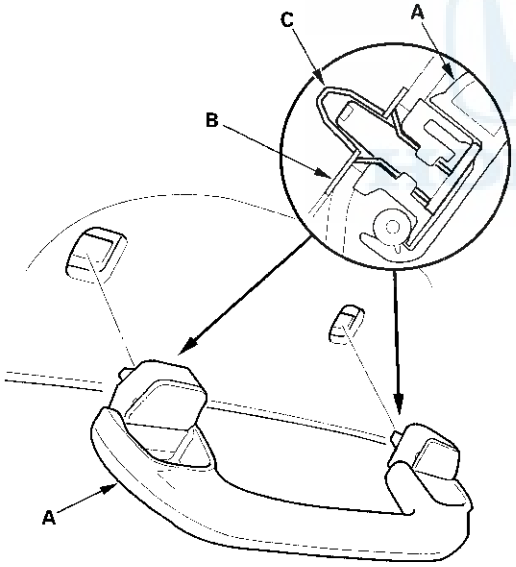

Headliner Removal/Installation

Special Tools Required
KTC trim tool set SOJATP2014 *
* Available through the Honda Tool and Equipment Program; call 888-424-6857

SRS components are located in this area. Review the SRS component locations (see page 24-11) and the precautions and procedures (see page 24-13) before doing repairs or service.

NOTE:
- Put on gloves to protect your hands.
- Take care not to bend or scratch the trim and the panels.
- Use the appropriate tool from the KTC trim tool set to avoid damage when removing components.

1. Do the battery terminal disconnection procedure (see page 22-62), then wait at least 3 minutes before beginning work.

2. Remove these items:

   - A-pillar trim, both sides (see page 20-57)
   - Ceiling light (see page 22-183)
   - Front seat belt upper anchor, both sides (see step 6 on page 24-4)
   - B-pillar lower trim, both sides (see page 20-60)
   - B-pillar upper trim, both sides (see page 20-60)
   - C-pillar trim, both sides (see page 20-63)
   - Grab handles, four places (see page 20-70)

3. Release the tabs (A) of the sunvisor cap (B) from the bracket (C) with an appropriate trim tool.

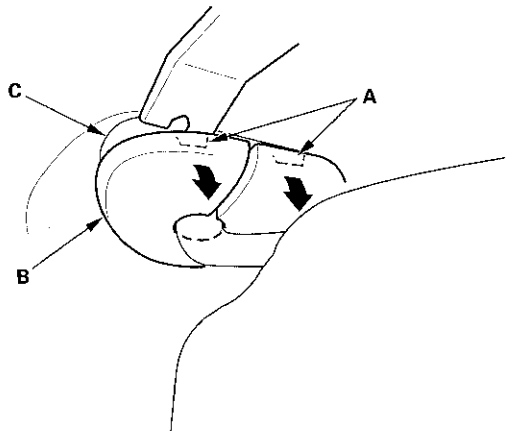

(cont'd)

Headliner Removal/Installation (cont'd)

4. Remove the sunvisor cap (A) from the bracket (B).

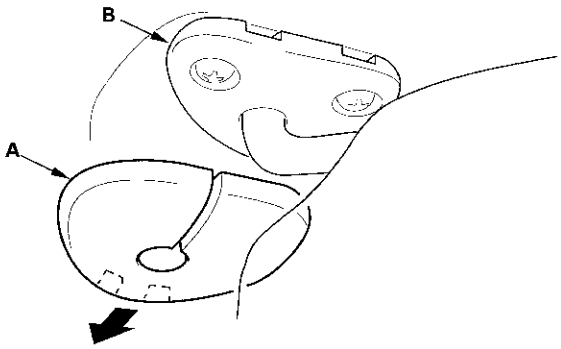

5. From both sides, remove the sunvisor (A).

   -1 Unhook the sunvisor from the holder (B).
   -2 Remove the screws with a TORX T25 bit.
   -3 Remove the sunvisor from the body.

Fastener Locations

▶ : TORX Screw, 2

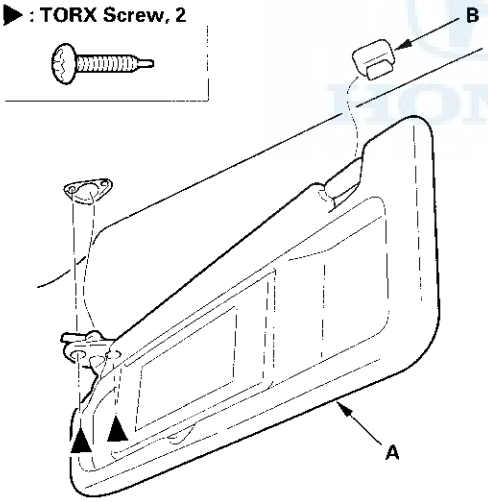

6. Push the hook (A) with a flat-tip screwdriver wrapped in protective tape, and turn the holder (B) 90 °, then pull it out.

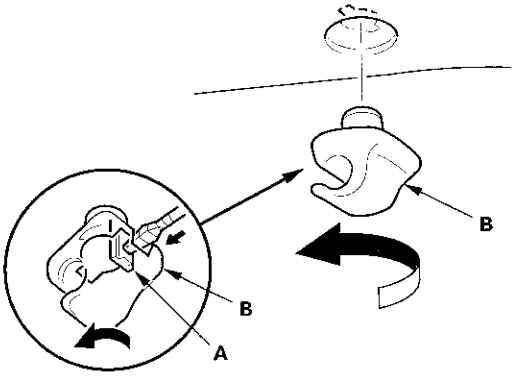

7. Remove the map light assembly (A).

   -1 Remove the lenses (B).
   -2 Remove the bolts.
   -3 If equipped, release the four tabs (C), then pull out the navigation microphone (D).
   -4 Disconnect the front individual map light connector (E). If equipped, disconnect the navigation microphone connector (F).

Fastener Locations

▶ : Bolt, 2

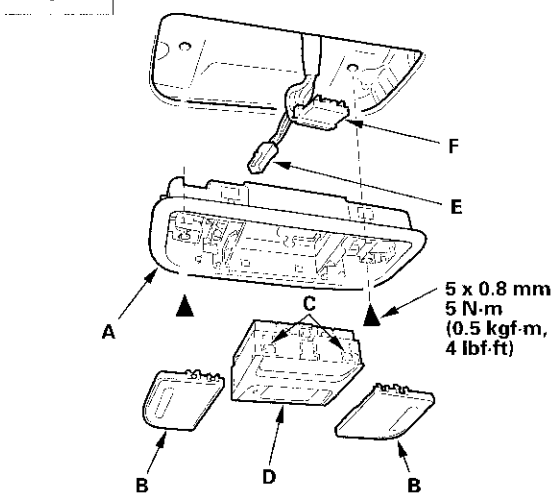

8. Detach the harness clips (A) from the front pillar (B), and disconnect the roof wire harness connector (C).

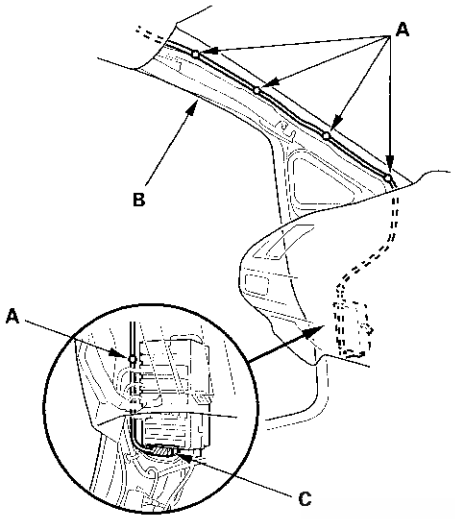

9. Remove the center console (see page 20-79).

10. Slide both front seats all the way back, and recline the seat-backs fully.

11. Remove the bolts securing the parking brake base frame (A), and lay it down as needed.

Fastener Locations

▶ : **Bolt, 4**

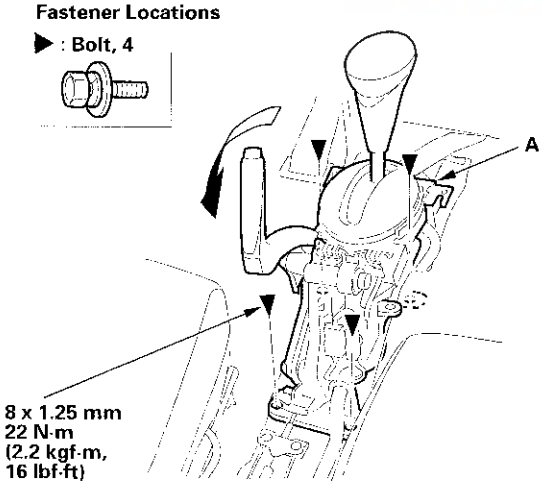

12. Lower the headliner (A).

-1 Remove the front door opening seals (B), and the rear door opening seals (C) from each roof portion.

-2 With the help of an assistant, detach the rear clips by pulling the rear portion of the headliner down.

Fastener Locations

▷ : **Clip, 2 (White)**

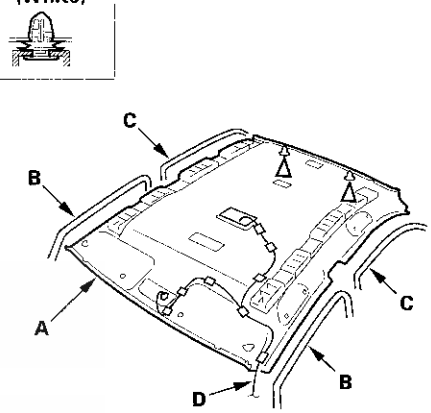

13. Lower the front of the headliner below the steering wheel. Rotate the liner, and pull it along with the roof wire harness (D) out through the passenger's front door. Do not bend the liner. Bending the liner will crease or damage it.

(cont'd)

Headliner Removal/Installation (cont'd)

14. If necessary, remove the cushion tape (A, B) fastening the interior wire harness (C) to the headliner (D), then remove the harness from the headliner.

Cushion tape A: P/N 91903-SNA-003
100 x 50 mm (3.94 x 1.97 in.)
Cushion tape B: P/N 91902-SNA-003
50 x 50 mm (1.97 x 1.97 in.)

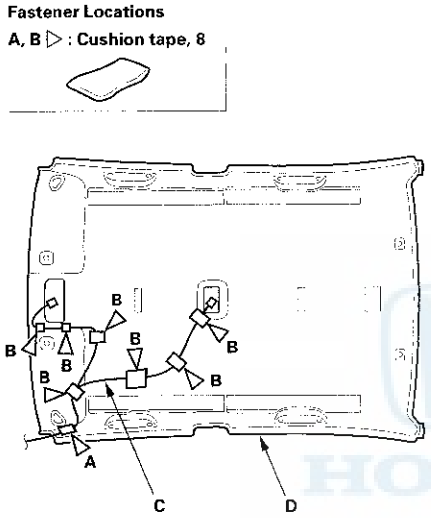

15. If necessary, remove the side curtain airbag mounting bolt (A) and the grab handle bracket mounting bolts (B), then remove the grab handle bracket (C) from each side by releasing the hooks (D).

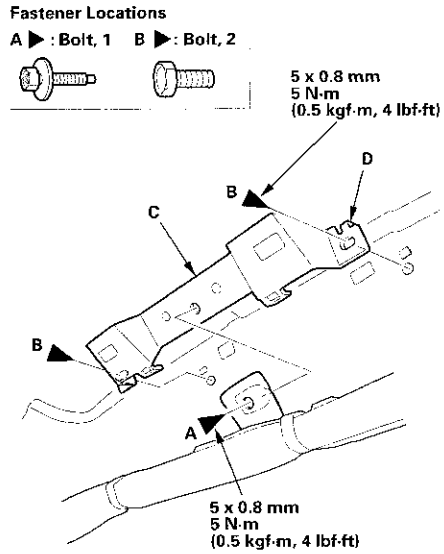

16. Install the headliner in the reverse order of removal, and note these items:

- If the side curtain airbag has deployed, replace the headliner and the removed trim pieces with new ones (see page 24-181).
- To prevent the side curtain airbags from deploying improperly and possibly causing injury, inspect the removed pieces and replace them if they have any the following of damage:
  - Any crease or tears in the headliner (A)
  - Any cracks or breakage in the grab handle (B)
  - Any damage around the grab handle holes (C) or sunvisor holes in the headliner
  - Any cracks in the sunvisor mounting bracket (D)
  - Any bends or cracks in the sunvisor stay shaft (E)
  - Any cracks in the sunvisor base (F)
  - Any cracks or breakage in the vanity mirror base (G)
  - Any clip mounts (H) which have come off the headliner
- When installing the grab handle, push on the handle against the bracket (I) until the clips (J) snap into place securely.
- If the clips are damaged or stress-whitened, replace them with new ones.
- Replace the removed cushion tape pieces with new ones.
- Check that both sides of the headliner are securely attached to the body.
- Make sure the headliner overlaps the trim pieces correctly (see page 24-183).
- When reinstalling the headliner through the front passenger's door opening, be careful not to fold or bend it. Also, be careful not to scratch the body.
- Do the battery terminal reconnection procedure (see page 22-62). If the IMA battery level gauge (BAT) displays no segments, start the engine, and hold it between 3,500 rpm and 4,000 rpm without load (in Park or Neutral) until the BAT displays at least three segments.
- Check for any DTCs that may have been set during repairs, and clear them.

Carpet Replacement

Headliner

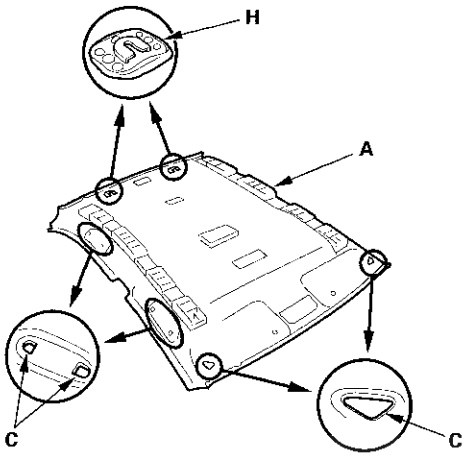

Grab handle

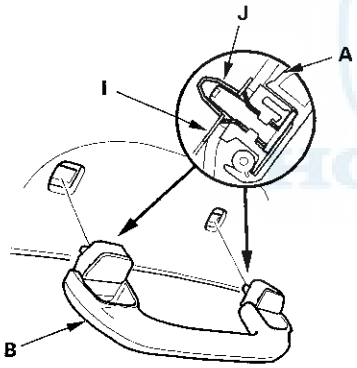

Sunvisor

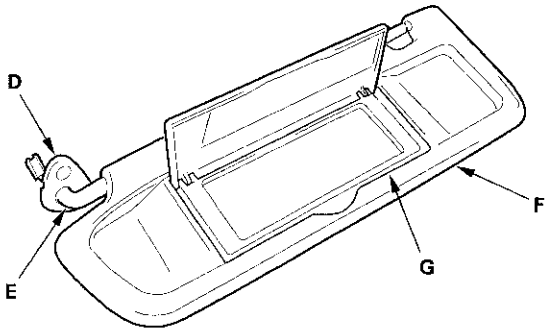

Special Tools Required
KTC trim tool set SOJATP2014 *
* Available through the Honda Tool and Equipment Program; call 888-424-6857

SRS components are located in this area. Review the SRS component locations (see page 24-11) and the precautions and procedures (see page 24-13) before doing repairs or service.

NOTE:
- Put on gloves to protect your hands.
- Use the appropriate tool from the KTC trim tool set to avoid damage when removing components.
- Take care not to damage, wrinkle, or twist the carpet.
- Be careful not to damage the dashboard or other interior trim pieces.

1. Remove these items:

   - Front seats, both sides (see page 20-105)
   - Rear seat cushion (see page 20-118)
   - Front door sill trim, both sides (see page 20-54)
   - Rear door sill trim, both sides (see page 20-55)
   - Kick panels, both sides (see step 5 on page 20-55)
   - B-pillar lower trim, both sides (see page 20-60)
   - Driver's dashboard undercover (see page 20-90)
   - Passenger's dashboard undercover (see page 20-91)
   - Center console (see page 20-79)
   - Steering joint cover (see page 17-11)

(cont'd)

Carpet Replacement (cont'd)

2. '06-08 models: Push the knob (A) back to release the hooks (B), then pull up the accelerator pedal (C).

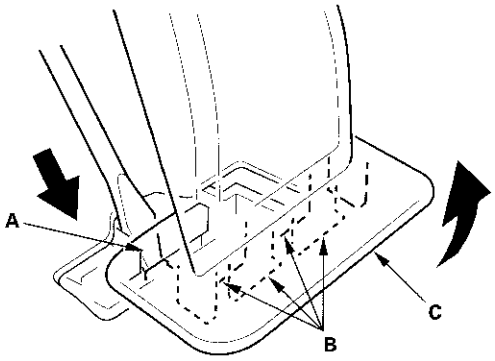

3. '09 model: Release the hooks (A) to remove the accelerator pedal clip (B). While pushing down the back-up spring (C), pull back the accelerator pedal (D) to release the hook (E).

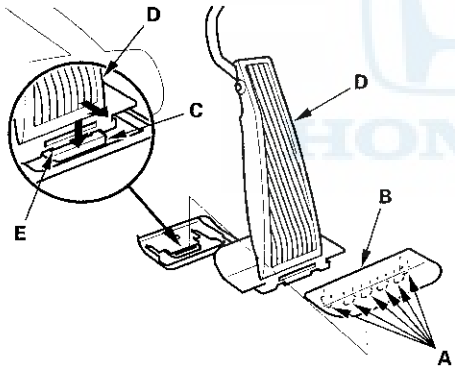

4. Remove the footrest (A).

   1. Remove the lower clip (B) from the stud bolt (C) with a 6 mm hexagon socket wrench.
   2. Remove the upper clip (D) from the stud bolt with a flat-tip screwdriver.

Fastener Locations

B ▷ : Clip, 1 **D ▷ : Clip, 1**

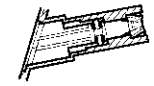

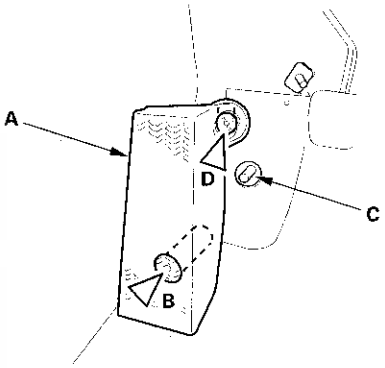

5. Disconnect the SRS unit connector A, and detach the wire harness clips (B). Using a TORX T30 bit, remove the ground bolt (C).

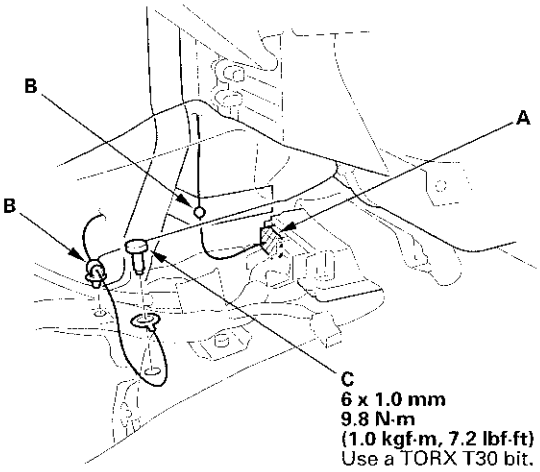

6. Remove the bolts (A, B), then remove the center pipe extension (C).

Fastener Locations

A ▶ : Bolt, 2 B ▶ : Bolt, 1

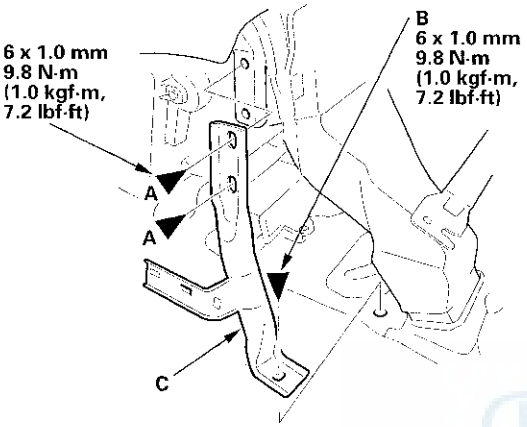

7. Remove the rear heater joint duct (A).

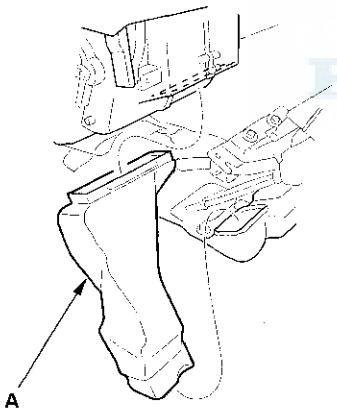

8. Disconnect the parking brake cables from the equalizer (see page 19-37).

9. Remove the floor mat holders (A) from the driver's side.

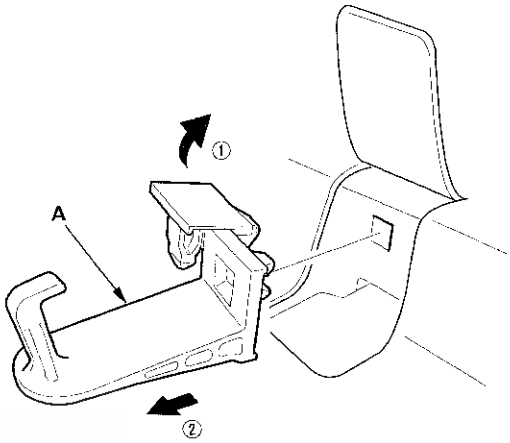

10. Remove the clips.

Fastener Locations

▷ : Clip, 2

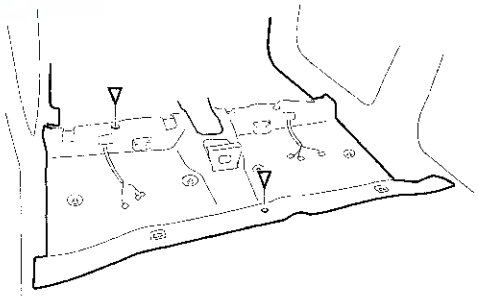

(cont'd)

Carpet Replacement (cont'd)

11. Release the Velcro fasteners (A), then pull the carpet (B) out from under the dashboard.

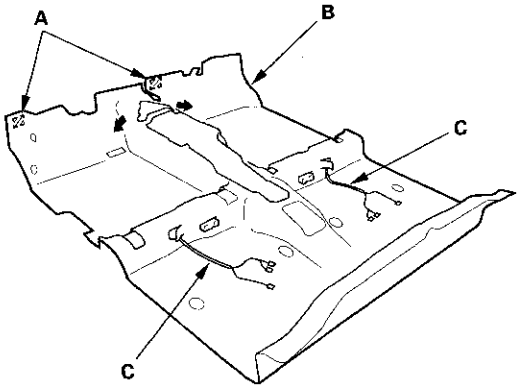

12. Pull the seat harnesses (C) out through the hole in the carpet, then remove the carpet.

13. Install the carpet in the reverse order of removal, and note these items:

    - Take care not to damage, wrinkle or twist the carpet.
    - Make sure the seat harnesses and the parking brake cables are routed correctly.
    - If the clips are damaged or stress-whitened, replace them with new ones.
    - Push the Velcro fasteners and the clips into place securely.
    - Push the accelerator pedal hooks into place securely, and verify that the pedal is properly fastened to the floor.

Center Console Removal/Installation

Special Tools Required
KTC trim tool set SOJATP2014 *
* Available through the Honda Tool and Equipment Program; call 888-424-6857

SRS components are located in this area. Review the SRS component locations (see page 24-11) and the precautions and procedures (see page 24-13) before doing repairs or service.

NOTE:
- Use the appropriate tool from the KTC trim tool set to avoid damage when removing components.
- Take care not to scratch the front seat, the dashboard, and related parts.

1. Remove the passenger's dashboard undercover (see page 20-91).

2. Detach the clips by pulling the front inner panel (A) up.

Fastener Locations
▷ : **Clip, 4**

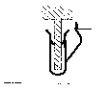

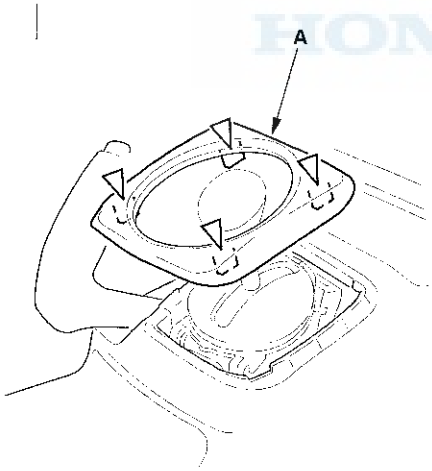

3. Gently pull out along the rear of the center console panel (A) to release the clips (B, C).

Fastener Locations
B ▷ : **Clip, 3** C ▷ : **Clip, 2**

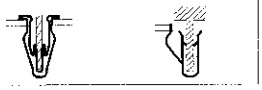

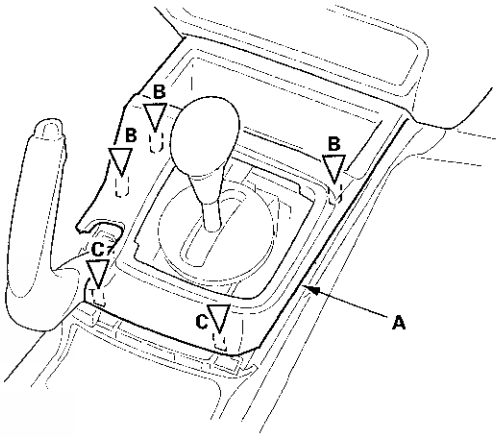

4. Pull the center console panel (A) up and rearward to release the tabs (B).

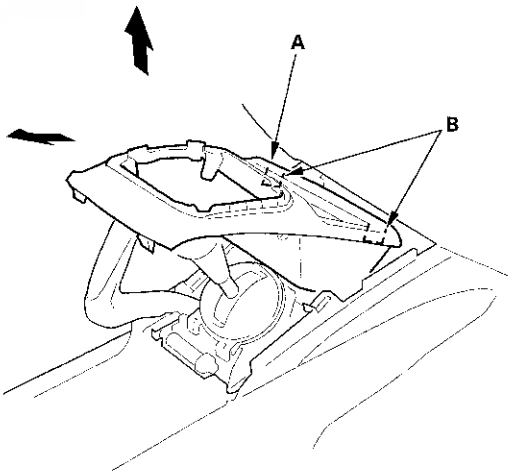

(cont'd)

Center Console Removal/Installation (cont'd)

5. Open the armrest (A), then remove the console box mat (B) and the bolts.

Fastener Locations

▶ : Bolt, 2

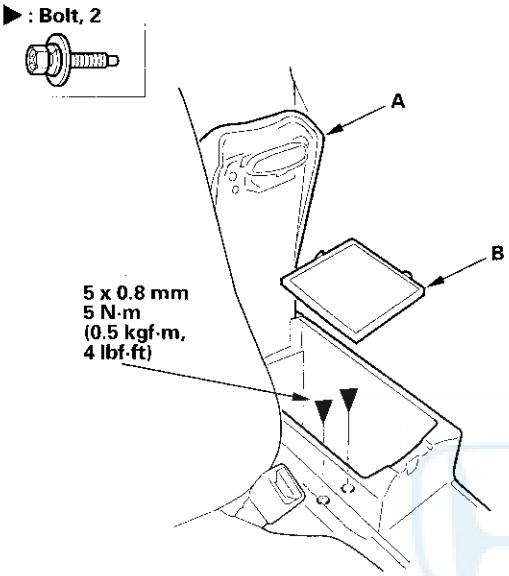

6. Remove the bolts and the clips from the front portion of the center console. Disconnect the console subharness connector (A), and detach the connector clip (B).

Fastener Locations

▶ : Bolt, 2 ▷ : Clip, 2

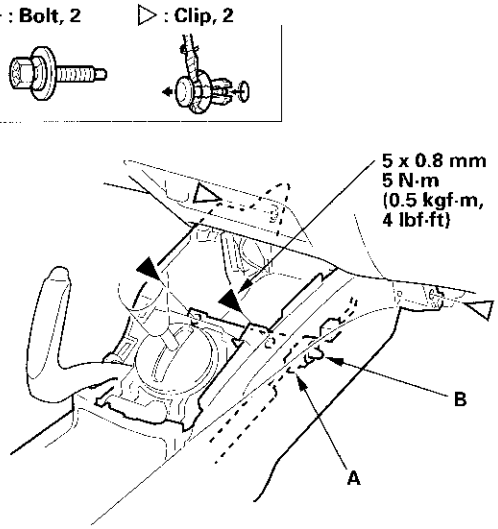

7. Slide both front seats all the way back, and fully recline both seat-backs.

8. Slide the center console (A) rearward to release the pins (B) from the bracket (C).

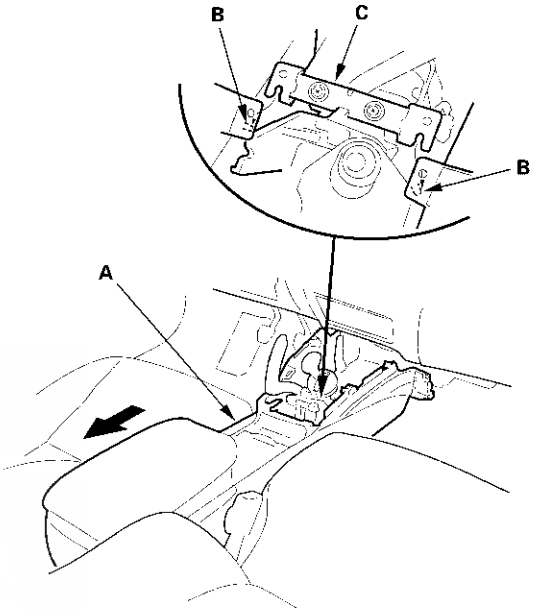

9. Lift up the rear of the console (A), and remove it from the dashboard.

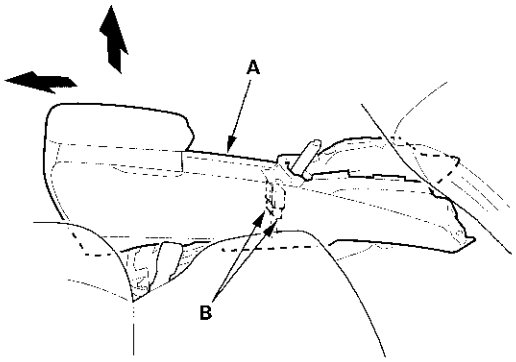

10. If equipped, disconnect the seat heater switch connectors (B).

11. Install the console in the reverse order of removal, and note these items:

    - Make sure each connector is plugged in properly.
    - If the clips are damaged or stress-whitened, replace them with new ones.
    - Push the clips and the hooks into place securely.
    - When installing the center console panel, install the tabs (A) into the notch (B) of the parking brake base frame (C).

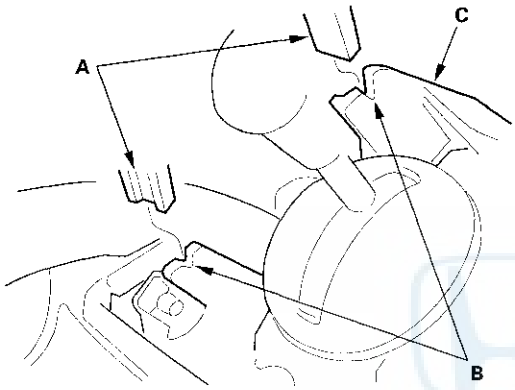

Center Console Disassembly/ Reassembly

Special Tools Required
KTC trim tool set SOJATP2014 *
* Available through the Honda Tool and Equipment Program; call 888-424-6857

NOTE:
- Use the appropriate tool from the KTC trim tool set to avoid damage when removing components.
- Take care not to scratch the center console, the dashboard, and related parts.

1. Remove the center console (see page 20-79).

2. Remove the center console armrest (see page 20-82).

3. Remove the screws with a TORX T20 bit, and disconnect the console accessory power socket connector (A).

Fastener Locations
▶ : TORX Screw, 8

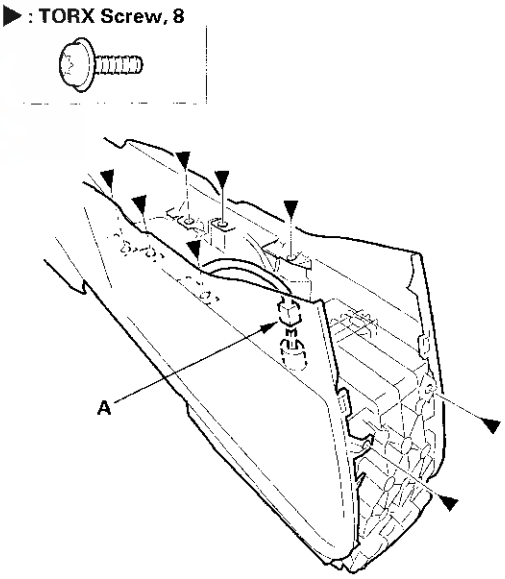

(cont'd)

Center Console Disassembly/ Reassembly (cont'd)

4. Release the hooks (A) and the pins (B), then separate the left console side panel (C), the right console side panel (D), the console beverage holder (E) and the console box (F). Detach the harness clips (G), then remove the console subharness (H) from the hooks (I).

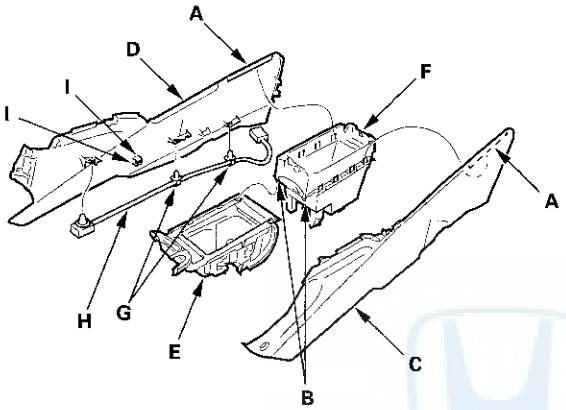

5. Release the hooks (A, B), then separate the console upper box (C) and the console lower box (D).

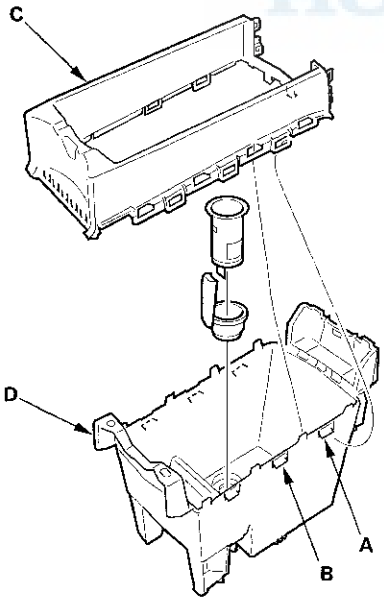

6. Assemble the console in the reverse order of disassembly, and make sure the console subharness connector is plugged in properly.

Center Console Armrest Replacement

NOTE: Take care not to scratch the armrest, the center console, and related parts.

1. Remove the center console (see page 20-79).

2. Gently pull out the center console rear cover (A) to detach the clips.

Fastener Locations

▷ : **Clip, 5**

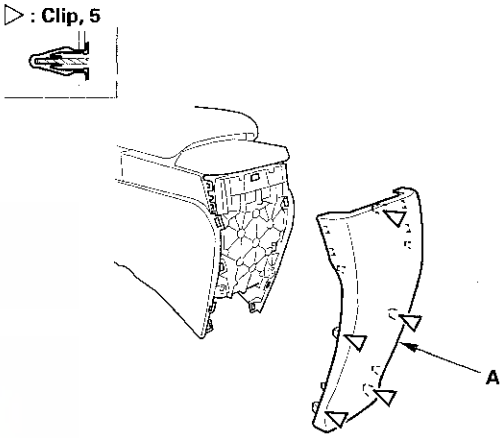

3. Open the armrest (A), pull the pin (B) off the armrest, then separate the armrest and the center console (C).

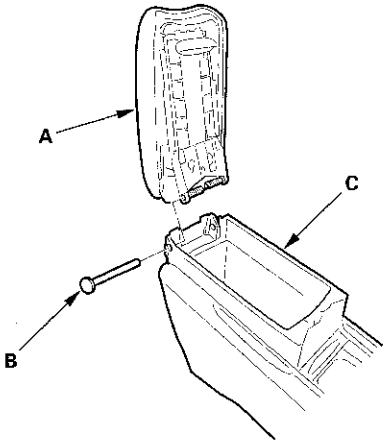

4. Install the center console armrest in the reverse order of removal, and if the clips are damaged or stress-whitened, replace them with new ones.

Armrest Lock Replacement

NOTE: Take care not to scratch the armrest and related parts.

1. Remove the center console armrest (see page 20-82).

2. Remove the screws with a TORX T15 bit. Slide the armrest liner (A) downward to release the hooks (B), then remove the armrest liner and the armrest spring (C).

Fastener Locations

▶ : TORX Screw, 2

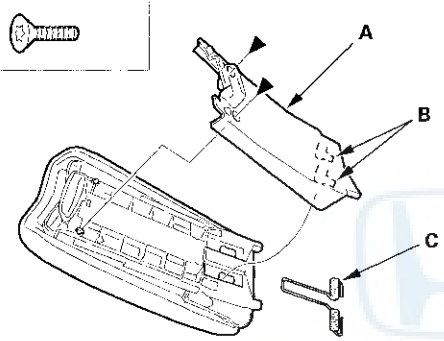

3. Remove the screws with a TORX T15 bit.

Fastener Locations

▶ : TORX Screw, 2

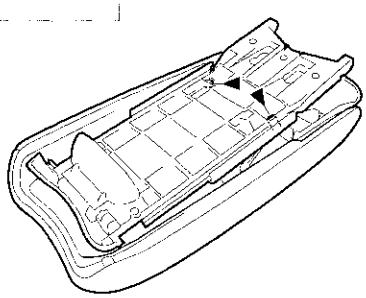

4. Slide the armrest (A) all the way forward, remove the screws with a TORX T15 bit, then remove the armrest frame (B).

Fastener Locations

▶ : TORX Screw, 2

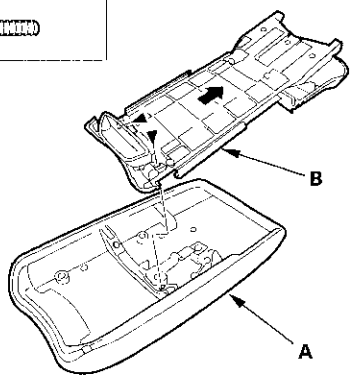

5. From the back of the armrest frame (A), push the edge of the armrest lock pin (B) with a flat-tip screwdriver, then slide the armrest lock pin fully.

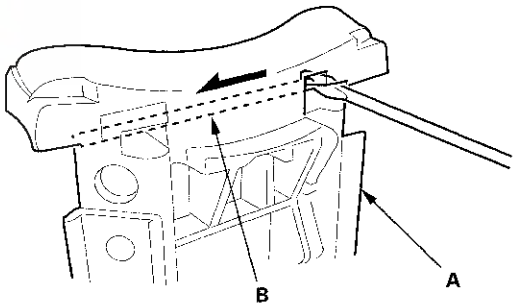

(cont'd)

Armrest Lock Replacement (cont'd)

6. Remove the armrest lock (A) with the armrest lock pin (B) from the armrest frame (C).

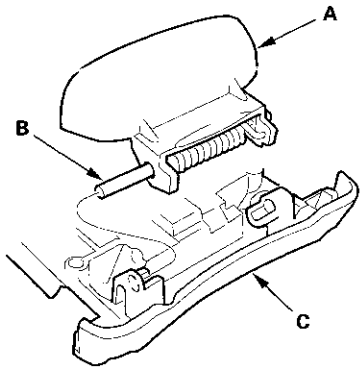

7. Remove the armrest lock pin (A), then separate the armrest lock (B) and the armrest lock spring (C).

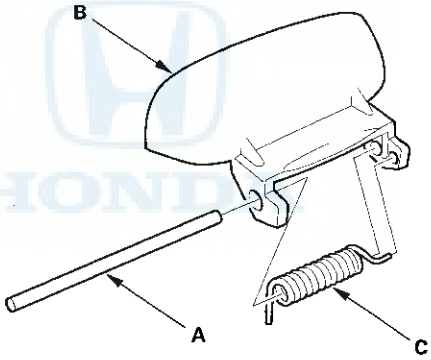

8. Install the armrest lock in the reverse order of removal.

Instrument Panel Removal/Installation

Special Tools Required
KTC trim tool set SOJATP2014 *
* Available through the Honda Tool and Equipment Program; call 888-424-6857

NOTE:
- Take care not to scratch the dashboard and related parts.
- Use the appropriate tool from the KTC trim tool set to avoid damage when removing components.

1. Remove these items:

   - Subdisplay visor (see page 20-87)
   - Navigation unit, with navigation system:
     – '06-08 models (see page 23-143)
     – '09 model (see page 23-330)
   - Audio unit, without navigation system:
     – '06-08 models (see page 23-70)
     – '09 model (see page 23-232)

2. Remove the screws.

Fastener Locations
▶ : Screw, 3

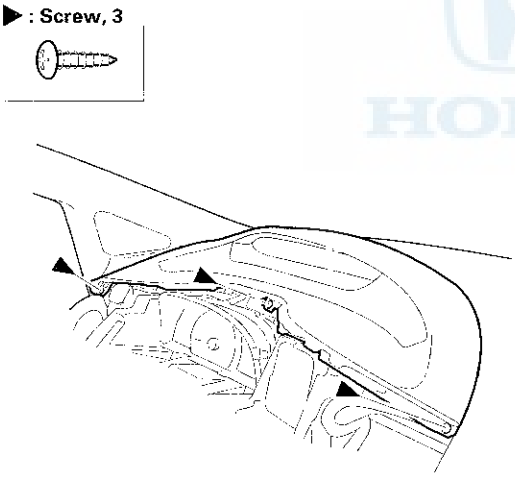

3. Detach the clips along the lower edge of the instrument panel (A).

Fastener Locations
▷ : Clip, 2

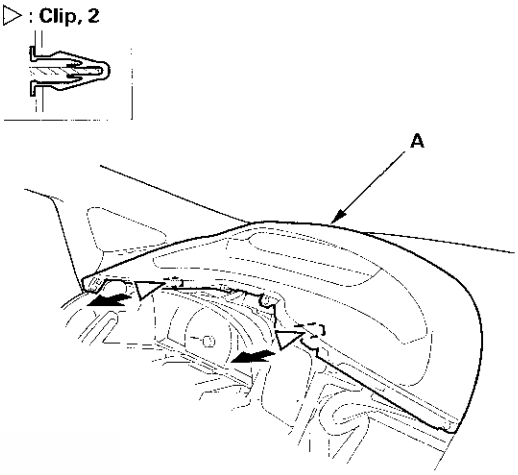

4. Detach the clips along the upper edge of the instrument panel (A). Gently pull out the instrument panel to release the hooks (B) from the holder (C) of the gauge control module.

Fastener Locations
▷ : Clip, 6

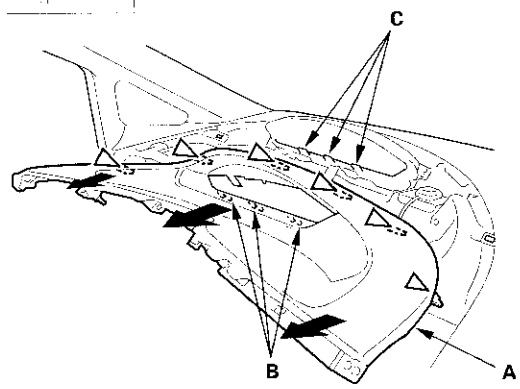

5. Install the instrument panel in the reverse order of removal, and note these items:

   - If the clips are damaged or stress-whitened, replace them with new ones.
   - Push the clips and the hooks into place securely.

Gauge Control Module (Speedo) Trim Removal/Installation

Special Tools Required
KTC trim tool set SOJATP2014 *
* Available through the Honda Tool and Equipment Program; call 888-424-6857

NOTE:
- Take care not to scratch the dashboard and related parts.
- Use the appropriate tool from the KTC trim tool set to avoid damage when removing components.

1. Pry up on the inside edge of the gauge control module (speedo) trim (A) with a trim tool to detach the clips.

Fastener Locations
▷ : **Clip, 4**

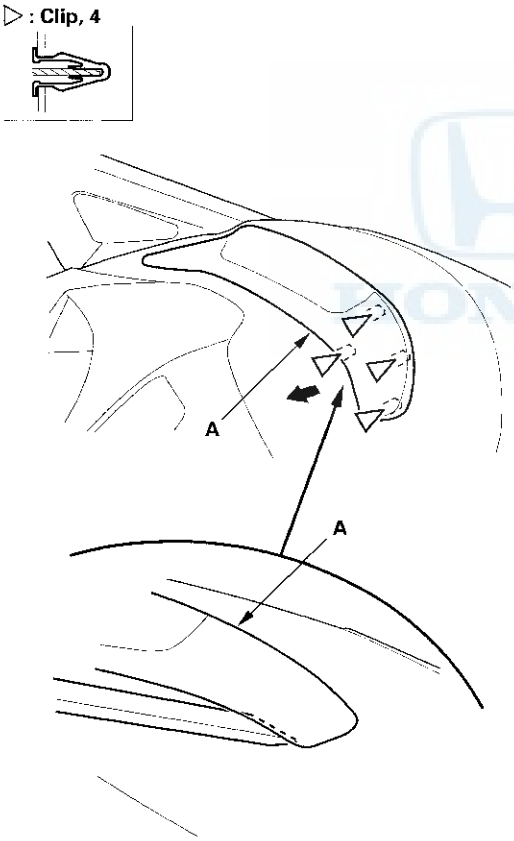

2. Detach the clips with a trim tool, and release the hooks (A) and the pins (B) along the edge of the gauge control module (speedo) trim (C), then remove the trim.

Fastener Locations
▷ : **Clip, 5**

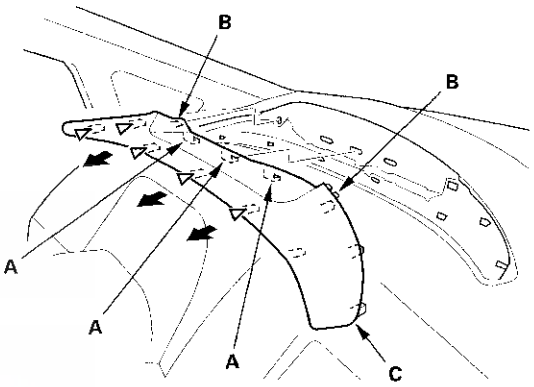

3. Install the trim in the reverse order of removal, and note these items:

   - If the clips are damaged or stress-whitened, replace them with new ones.
   - Push the clips and the hooks into place securely.

Subdisplay Visor Removal/Installation

Special Tools Required
KTC trim tool set SOJATP2014 *
* Available through the Honda Tool and Equipment Program; call 888-424-6857

NOTE:
- Put on gloves to protect your hands.
- Take care not to scratch the dashboard and related parts.
- Use the appropriate tool from the KTC trim tool set to avoid damage when removing components.

1. Remove the driver's dashboard lower cover (see page 20-89).

2. Tilt the steering column down, and pull it fully out.

3. Remove the screw.

Fastener Location
▶ : Screw, 1

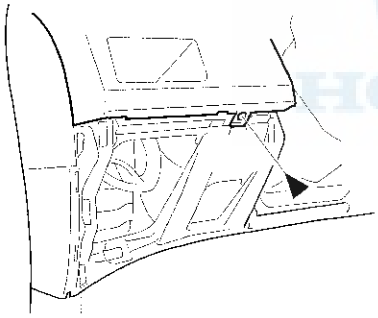

4. Pull the back of the driver's pocket (A) by hand from the driver's lower cover opening to release the clips (B) and the hook (C) on the outside.

Fastener Locations
B, E ▷ : Clip, 4

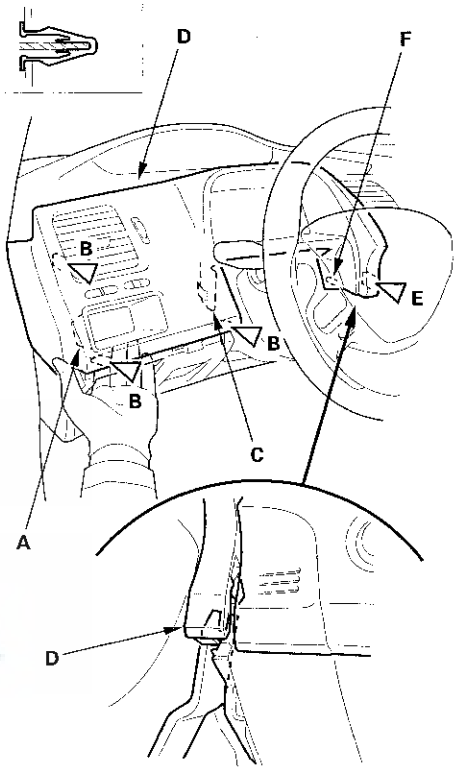

5. Pry up on the inside edge of the subdisplay visor (D) with a trim tool to detach the clip (E), and release the pin (F).

(cont'd)

Subdisplay Visor Removal/Installation (cont'd)

6. Detach the clips along the upper edge of the subdisplay visor (A). Gently pull out the visor to release the hooks (B).

Fastener Locations

▷ : Clip, 6

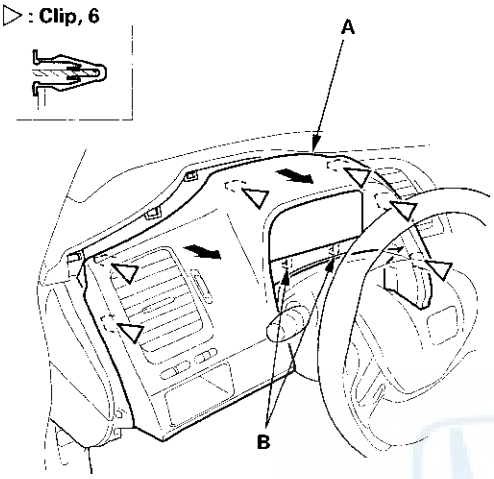

7. Disconnect the illumination control switch connector (A).

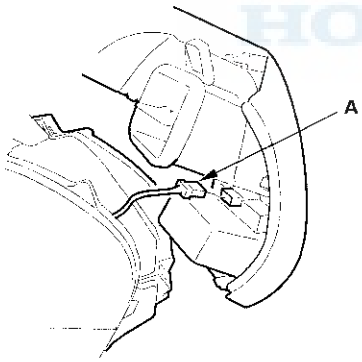

8. If necessary, remove the screws, then remove the illumination control switch (A), and the driver's pocket (B) from the subdisplay visor (C).

Fastener Locations

▶ : Screw, 5

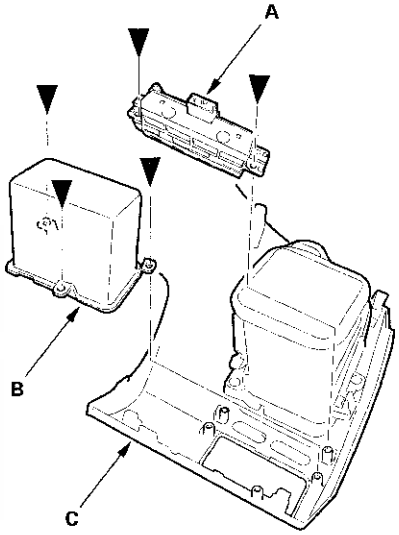

9. Install the subdisplay visor in the reverse order of removal, and note these items:

- Make sure all connectors are plugged in properly.
- If the clips are damaged or stress-whitened, replace them with new ones.
- Push the clips and the hooks into place securely.

Driver's Dashboard Lower Cover Removal/Installation

Special Tools Required
KTC trim tool set SOJATP2014 *
* Available through the Honda Tool and Equipment Program; call 888-424-6857

NOTE:
- Use the appropriate tool from the KTC trim tool set to avoid damage when removing components.
- Take care not to scratch the dashboard and related parts.

1. Tilt the steering column fully upward.

2. Gently pull out on the lower edge of the dashboard lower cover (A) to detach the lower clips.

Fastener Locations
▷ : **Clip, 3**

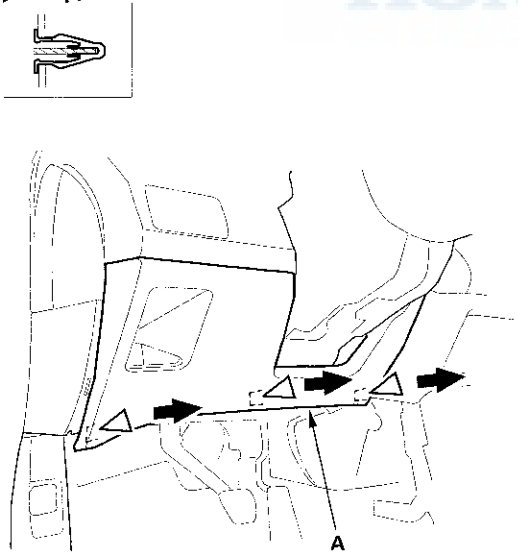

3. Detach the upper clips, and release the hook (A) and the pin (B) by pulling the driver's dashboard lower cover (C) back.

Fastener Locations
▷ : **Clip, 5**

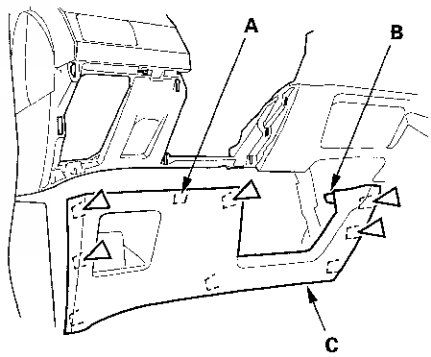

4. Install the cover in the reverse order of removal, and note these items:

   - If the clips are damaged or stress-whitened, replace them with new ones.
   - Push the clips and the hooks into place securely.

Driver's Dashboard Undercover Removal/Installation

NOTE: Take care not to scratch the dashboard and related parts.

1. Remove the driver's dashboard undercover (A).

   -1 Turn the lock knob (B) 90 °.
   -2 Gently pull down the rear edge to detach the clips.
   -3 Pull the undercover away to release the pin (C) from the holder (D).
   -4 For some models: Disconnect the foot light illumination connector (E).

Fastener Locations

▷ : **Clip, 2**

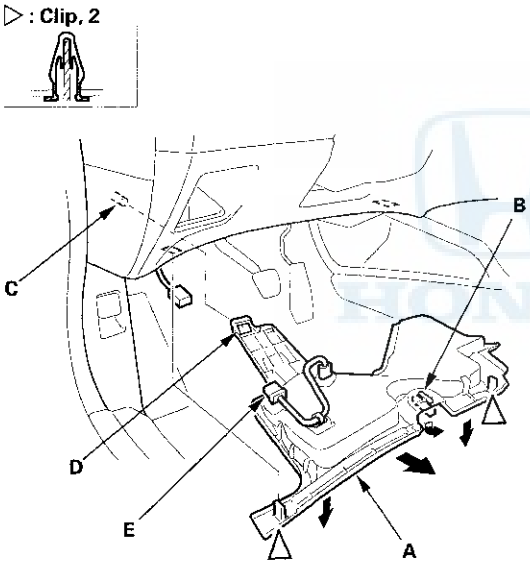

2. Install the undercover in the reverse order of removal, and note these items:

   - If the clips are damaged or stress-whitened, replace them with new ones.
   - Make sure the foot light illumination connector is plugged in properly (for some models).
   - Push the clips into place securely.

Center Pocket Removal/Installation

NOTE: Take care not to scratch the dashboard and related parts.

1. Disassemble the dashboard/steering hanger beam (see page 20-101).

2. Remove the screws, then remove the center pocket (A).

Fastener Locations

▶ : **Screw, 4**

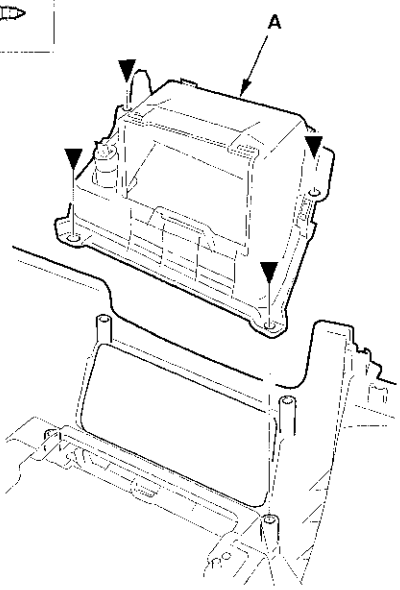

3. Install the center pocket in the reverse order of removal.

Passenger's Dashboard Undercover Removal/Installation

NOTE: Take care not to scratch the dashboard and related parts.

1. Remove the passenger's dashboard undercover (A).

   1 Gently pull out the rear edge to detach the clips (B, C).
   2 Pull the undercover away to release the pins (D) from the holders (E).
   3 For some models: Disconnect the foot light illumination connector (F).

Fastener Locations

B ▷ : Clip, 2 C ▷ : Clip, 2

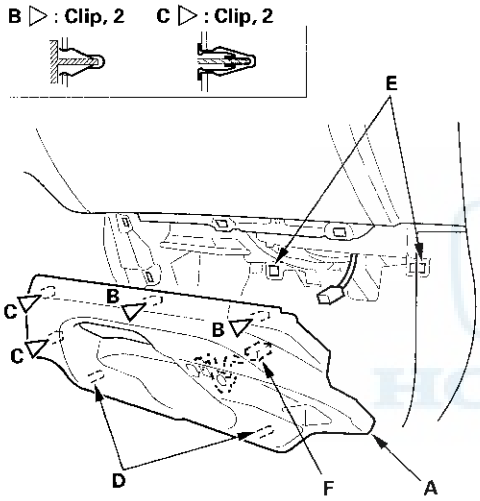

2. Install the undercover in the reverse order of removal, and note these items:

   - Make sure the foot light illumination connector is plugged in properly (for some models).
   - If the clips are damaged or stress-whitened, replace them with new ones.
   - Push the clips into place securely.

Glove Box Removal/Installation

SRS components are located in this area. Review the SRS component locations (see page 24-11) and the precautions and procedures (see page 24-13) before doing repairs or service.

NOTE: Take care not to scratch the dashboard and related parts.

1. Remove the bolts.

Fastener Locations

▶ : Bolt, 2

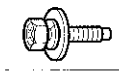

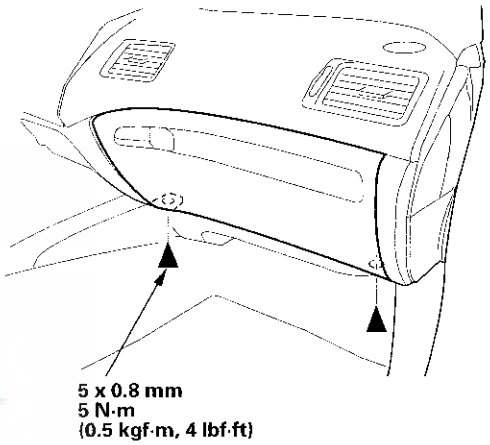

2. While holding the glove box (A), release the glove box stops (B) on each side of the glove box by pushing them in, then remove the glove box.

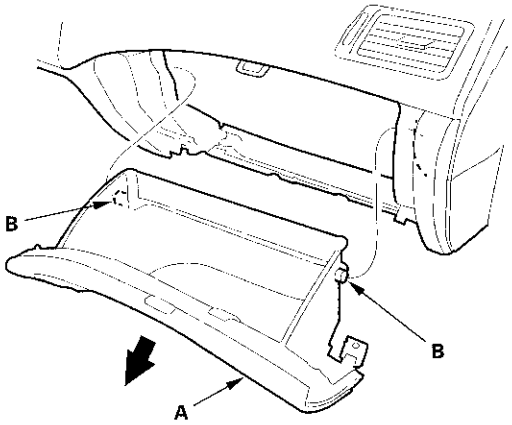

3. Install the glove box in the reverse order of removal.

Dashboard Vent Removal/Installation

Special Tools Required
KTC trim tool set SOJATP2014 *
* Available through the Honda Tool and Equipment Program; call 888-424-6857

Driver's Outer Vent

NOTE: Take care not to scratch the dashboard and related parts.

1. Remove the subdisplay visor (see page 20-87).

2. Remove the screws securing the driver's outer vent (A), then remove the driver's outer vent from the subdisplay visor (B).

Fastener Locations
▶ : Screw, 3

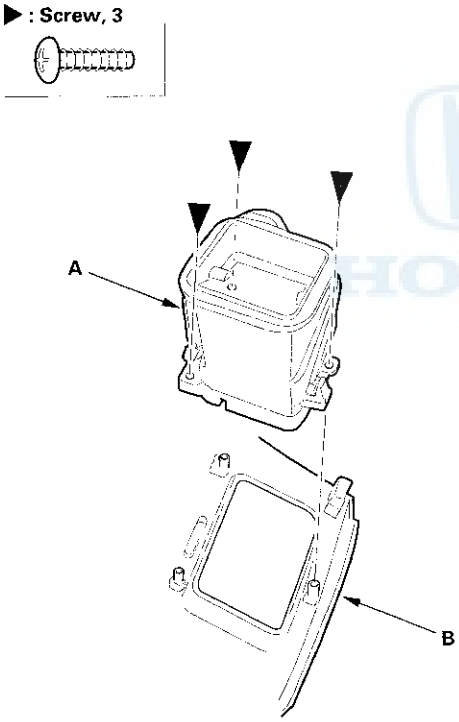

3. Install the outer vent in the reverse order of removal.

Driver's Center Vent

NOTE: Take care not to scratch the dashboard and related parts.

1. Remove these items:

   - Navigation unit, with navigation system:
     – '06-08 models (see page 23-143)
     – '09 model (see page 23-330)
   - Audio unit, without navigation system:
     – '06-08 models (see page 23-70)
     – '09 model (see page 23-232)

2. Remove the screws securing the driver's center vent (A), then remove the driver's center vent from the center panel (B).

Fastener Locations
▶ : Screw, 3

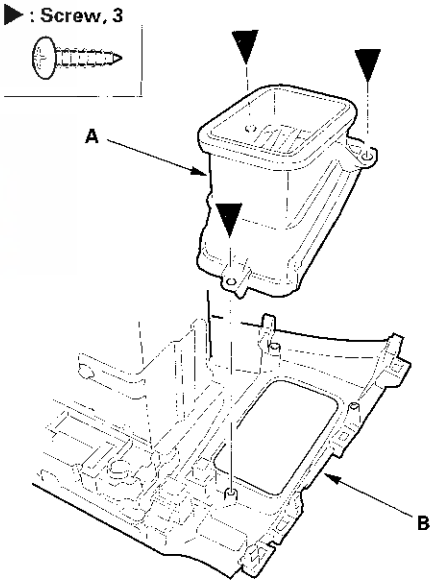

3. Install the center vent in the reverse order of removal.

Passenger's Vent

SRS components are located in this area. Review the SRS component locations (see page 24-11) and the precautions and procedures (see page 24-13) before doing repairs or service.

NOTE:
- Take care not to scratch the dashboard and related parts.
- Use the appropriate tool from the KTC trim tool set to avoid damage when removing components.
- Put on gloves to protect your hands.

1. While holding the glove box (A), release the glove box stops (B) on each side of the glove box by pushing them in, then let the glove box hang down.

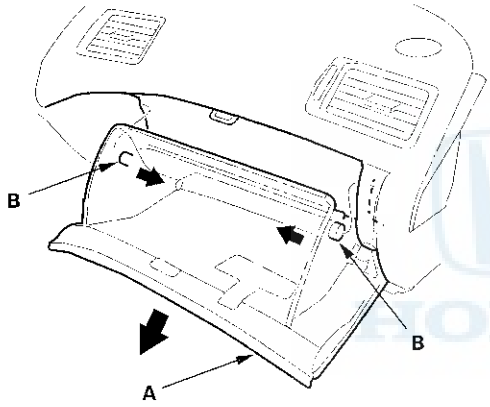

2. From inside the glove box opening, push on the side hooks (A) by hand to release them. Gently pull out the side vent (B) to release the other hooks (C), then remove the passenger's vent.

Outer

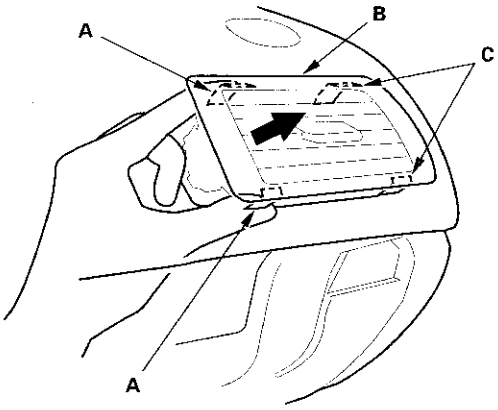

Center

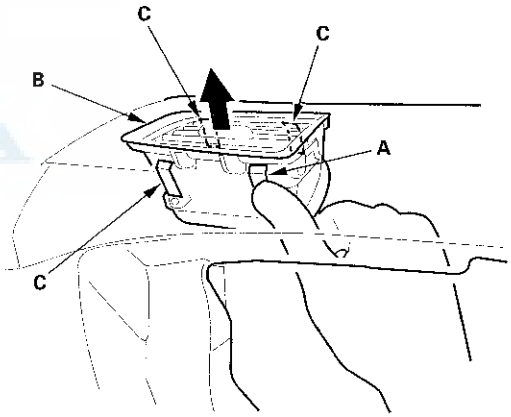

3. Install the passenger's vents in the reverse order of removal.

Glove Box Striker Replacement

SRS components are located in this area. Review the SRS component locations (see page 24-11) and the precautions and procedures (see page 24-13) before doing repairs or service.

NOTE: Take care not to scratch the dashboard and related parts.

1. While holding the glove box, release the glove box stops on each side of the glove box by pushing them in, then let the glove box hang down (see step 1 on page 20-93).

2. Remove the screws, then remove the glove box striker (A).

Fastener Locations

▶ : Screw, 2

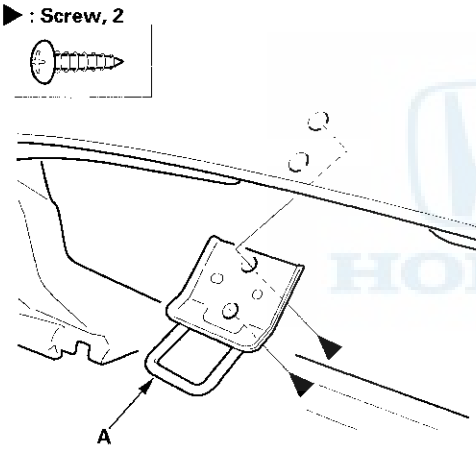

3. Install the striker in the reverse order of removal.

Dashboard Side Trim Removal/ Installation

NOTE: Take care not to scratch the dashboard and related parts.

1. Remove the dashboard side trim (A).

   -1 Gently pull up the rear edge to release the rear hooks (B).
   -2 Pull the trim away to release the front hook (C) from the A-pillar trim (D).

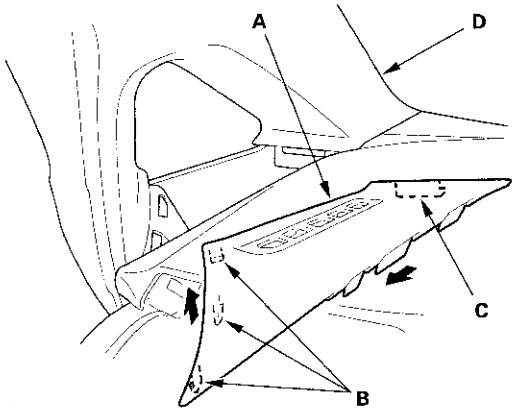

2. Install the side trim in the reverse order of removal.

Side Defogger Vent Trim Removal/ Installation

Special Tools Required
KTC trim tool set SOJATP2014 *
* Available through the Honda Tool and Equipment Program; call 888-424-6857

NOTE:
- Use the appropriate tool from the KTC trim tool set to avoid damage when removing components.
- Take care not to scratch the dashboard and related parts.

1. Insert the appropriate trim tool into a gap between the side defogger vent trim (A) and the dashboard (B), and release the hook (C).

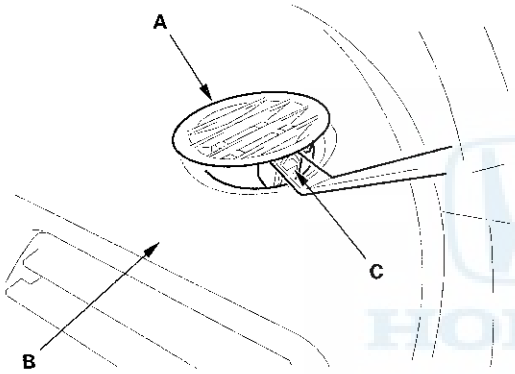

2. Install the side defogger vent trim in the reverse order of removal.

Dashboard/Steering Hanger Beam Removal/Installation

Special Tools Required
KTC trim tool set SOJATP2014 *
* Available through the Honda Tool and Equipment Program; call 888-424-6857

SRS components are located in this area. Review the SRS component locations (see page 24-11) and the precautions and procedures (see page 24-13) before doing repairs or service.

NOTE:
- Use the appropriate tool from the KTC trim tool set to avoid damage when removing components.
- Have an assistant help you when removing and installing the dashboard/steering hanger beam.
- Take care not to scratch the dashboard, the body and other related parts.
- Put on gloves to protect your hands.

1. Do the battery terminal disconnection procedure (see page 22-62), then wait at least 3 minutes before beginning work.

2. Remove these items:

   - Driver's dashboard lower cover (see page 20-89)
   - Driver's dashboard undercover (see page 20-90)
   - Passenger's dashboard undercover (see page 20-91)
   - Center console (see page 20-79)
   - Glove box (see page 20-91)
   - Kick panel, both sides (see page 20-54)
   - A-pillar trim, both sides (see page 20-57)
   - Steering column (see page 17-11)
   - EPS control unit (see page 17-82)

(cont'd)

Dashboard/Steering Hanger Beam Removal/Installation (cont'd)

Driver's side

3. Remove the bolt securing the under-dash fuse/relay box (A). Disconnect the roof wire harness connector (B), then lower the box.

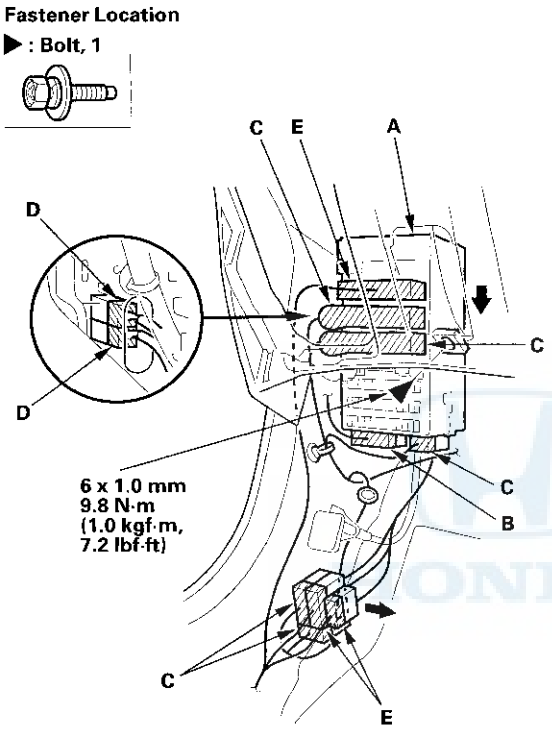

4. From under the dash, disconnect the engine compartment wire harness connectors (C), the driver's door wire harness connectors (D), and the floor wire harness connectors (E) from the dashboard wire harness connectors or the under-dash fuse/relay box.

Middle portion

5. Disconnect the SRS unit connector (A), and detach the wire harness clips (B). Remove the ground bolt (C) with a TORX T30 bit.

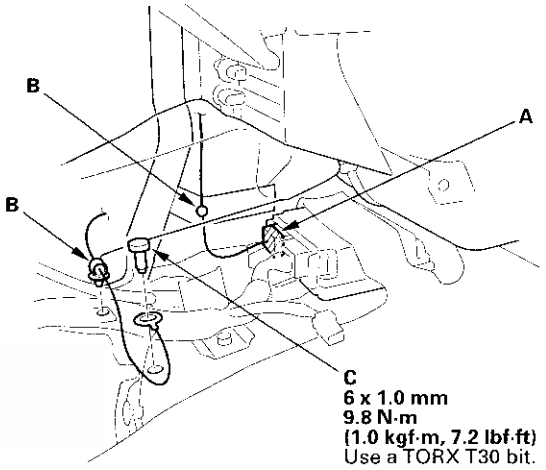

6. Disconnect the A/C subharness connector (A) in the glove box opening.

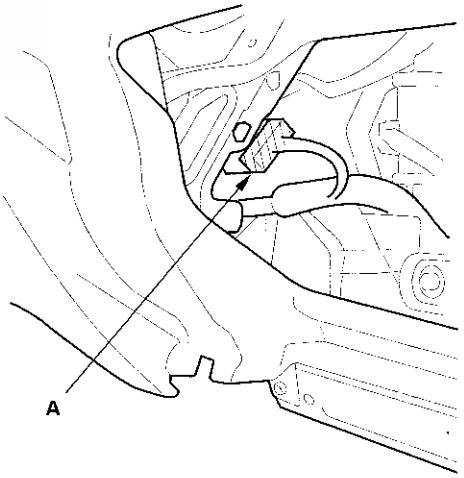

Passenger's side

7. From under the dash, disconnect the passenger's door wire harness connectors (A) and the antenna connector (B).

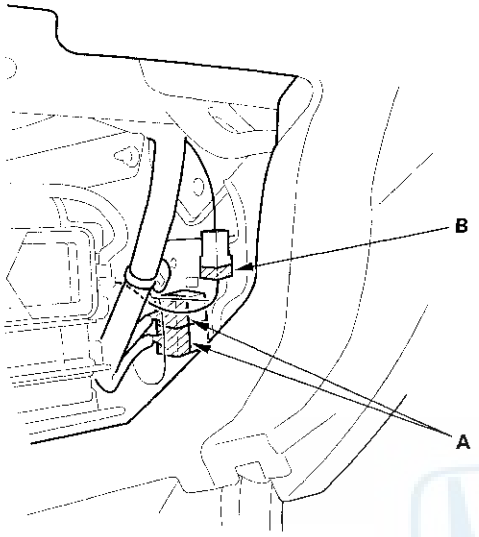

8. Remove the special bolts (A) from outside the passenger's door.

   1. Remove the caps (B).
   2. Loosen the special bolts until they disengage from the threads on the hanger beam sleeves (C). Continue loosening the bolts until they engage the inside threads of the adjusting nuts (D). The thread lock on the special bolts makes the special bolts and the adjusting nuts turn together.
   3. Tighten the special bolts to turn the adjusting nuts until they bottom in the sleeves. This creates a gap (E) between the adjusting nuts and the body.
   4. Loosen the special bolts to disengage them from the adjusting nuts. Remove the special bolts.

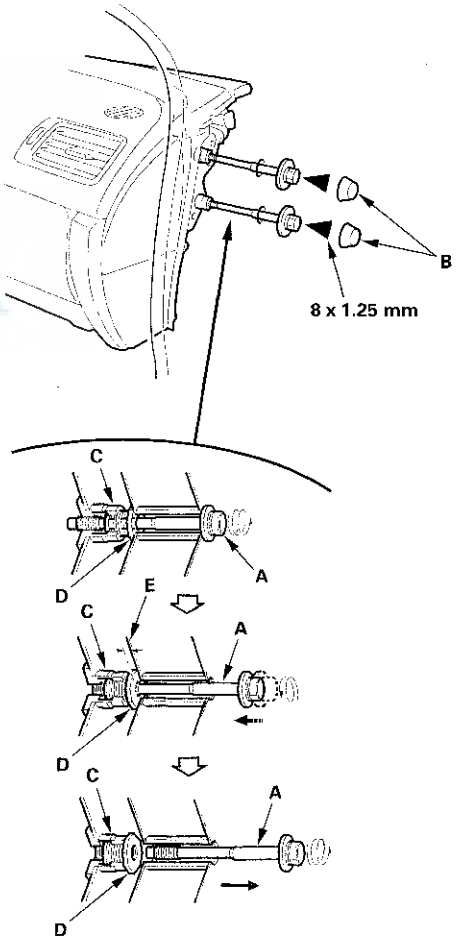

(cont'd)

Dashboard/Steering Hanger Beam Removal/Installation (cont'd)

9. If necessary, remove the dashboard side cover (A).
   1. Gently pull out along the rear edge to release the hooks (B).
   2. Gently pull out on the side cover to release the hooks (C), then remove the side cover.

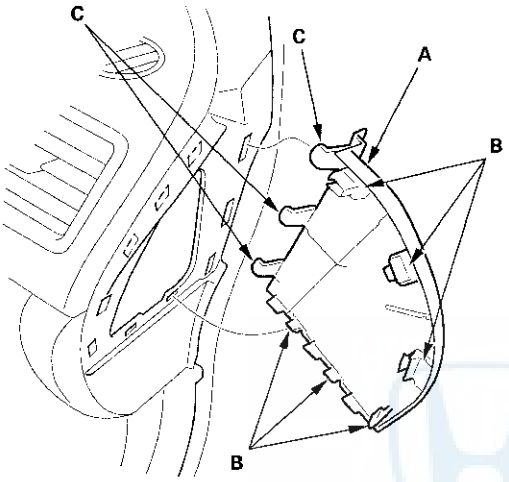

10. If the adjusting nuts (A) were not fully bottomed in the sleeves in step 8, finish screwing the adjusting nuts into the sleeves with a 21 mm open-end wrench (B). In this case, replace the special bolts with new ones because the thread lock is worn out.

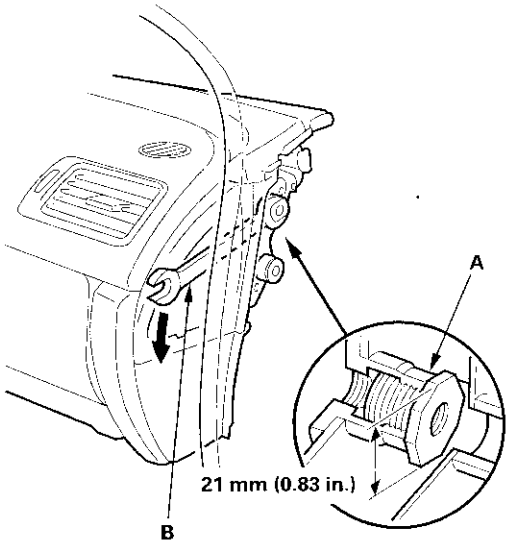

11. Remove the caps (A), then remove the bolts (B, C, D) from outside the driver's door.

Fastener Locations

B ▶ : Bolt, 3 **C ▶ : Bolt, 1** **D ▶ : Bolt, 4**

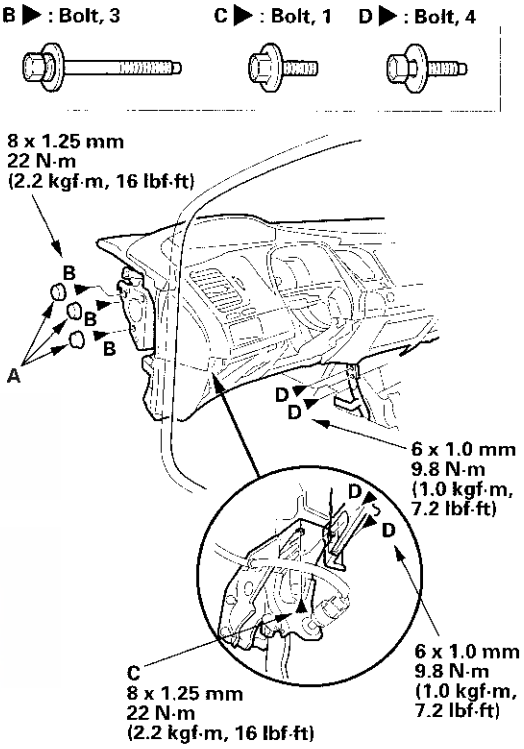

12. Lift up on the dashboard (A) to release it from the guide pins (B). Carefully remove the dashboard through the front door opening. Take care not to scratch the body with the adjusting nuts on the passenger's side.

    NOTE: Do not rest the dashboard on its lower center cover opening, or it may be damaged. Lay it on its front or back.

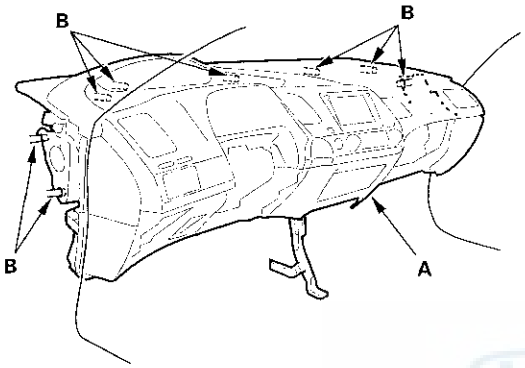

13. Remove the bolt, then remove the center pipe extension (A).

Fastener Location

▶ : Bolt, 1

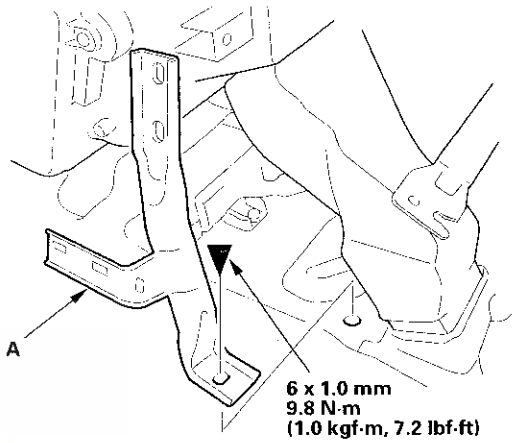

HONDA

(cont'd)

Dashboard/Steering Hanger Beam Removal/Installation (cont'd)

14. Install the dashboard in the reverse order of removal, and note these items:

    - Before tightening the bolts, make sure the wire harnesses are not pinched.
    - Make sure the connectors are plugged in properly, and the antenna lead and each cable are connected properly.
    - Before reinstalling the dashboard, screw the special bolts (A) into the adjusting nuts (B), and check that they turn together. If they do not turn together, replace the special bolts.
    - After setting the dashboard in the body, reinstall all of the mounting bolts but do not tighten them. First tighten the driver's side bracket bolts to the specified torque. Next, tighten the special bolts. As you tighten the bolts, the adjusting nuts screw out of the sleeves (C) until they contact the body. Continue tightening the special bolts to the specified torque.
    - Tighten all remaining mounting bolts to the specified torque.
    - Apply medium strength liquid thread lock to the bolts securing the center bracket and the dashboard before reinstallation.
    - Do the battery terminal reconnection procedure (see page 22-62). If the IMA battery level gauge (BAT) displays no segments, start the engine, and hold it between 3,500 rpm and 4,000 rpm without load (in Park or Neutral) until the BAT displays at least three segments.
    - Check for any DTCs that may have been set during repairs, and clear them.

Special bolt tightening on passenger's side

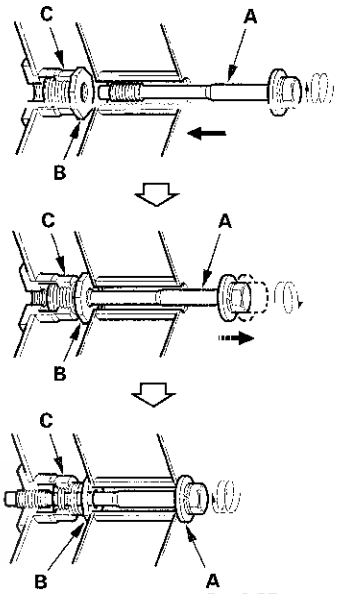

8 x 1.25 mm
22 N·m (2.2 kgf·m, 1.6 lbf·ft)

Dashboard/Steering Hanger Beam Disassembly/Reassembly

Special Tools Required
KTC trim tool set SOJATP2014 *
* Available through the Honda Tool and Equipment Program; call 888-424-6857

NOTE:
- Put on gloves to protect your hands.
- Take care not to scratch the dashboard and related parts.
- Take care not to bend the brackets.
- Use the appropriate tool from the KTC trim tool set to avoid damage when removing components.

1. Remove the dashboard/steering hanger beam (see page 20-95).

2. Remove these items from the dashboard:

   - Instrument panel (see page 20-85)
   - Gauge control module (speedo) trim (see page 20-86)
   - Subdisplay visor (see page 20-87)
   - Navigation unit, with navigation system:
     – '06-08 models (see page 23-143)
     – '09 model (see page 23-330)
   - Audio unit, without navigation system:
     – '06-08 models (see page 23-70)
     – '09 model (see page 23-232)
   - Passenger's airbag (see page 24-185)
   - Gauge control module (speedo) (see page 22-255)
   - Gauge control module (tach) (see page 22-255)

3. Remove the bolts.

Fastener Locations
▶ : Bolt, 5

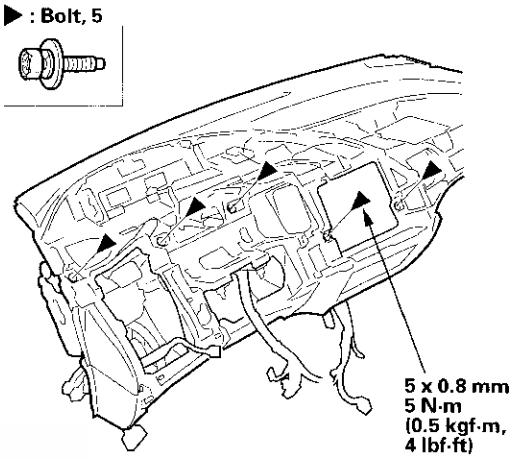

4. From the back of the dashboard, release the hooks (A), then remove the center joint duct (B).

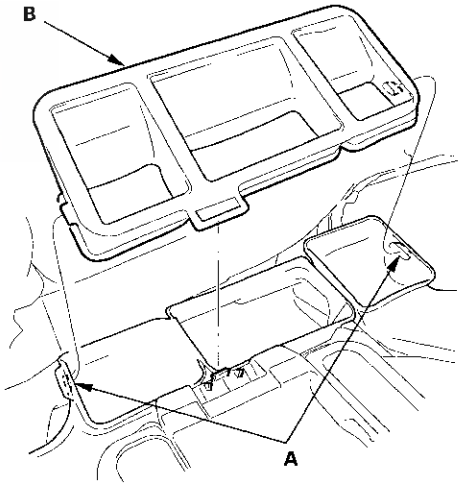

(cont'd)

Dashboard/Steering Hanger Beam Disassembly/Reassembly (cont'd)

5. From the back of the dashboard, disconnect the tweeter connectors (A), the front accessory power socket connector (B), and the sunlight sensor connector (C), then detach the harness clips (D).

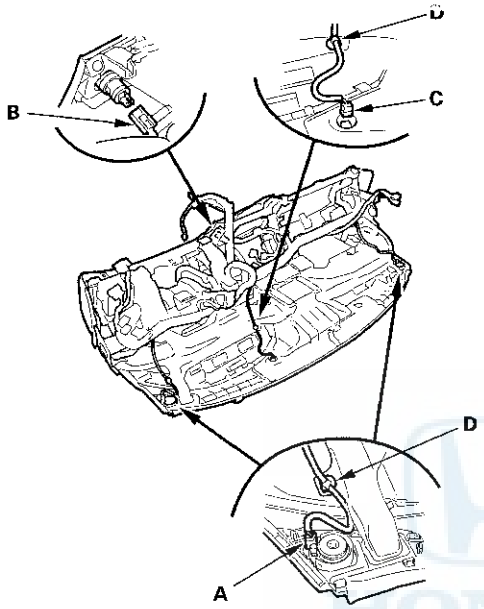

6. From the back of the dashboard, remove the screws (A, B), then separate the dashboard (C) from the steering hanger beam (D).

Fastener Locations

A ▶ : Screw, 6 (Silver) **B ▶ : Screw, 1 (Black)**

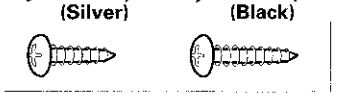

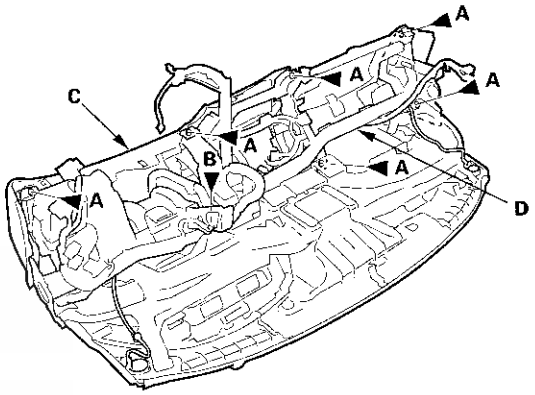

7. Assemble the dashboard and the steering hanger beam in the reverse order of disassembly, and note these items:

   - Make sure the dashboard wire harness is not pinched.
   - Make sure the connectors are plugged in properly.

Component Location Index

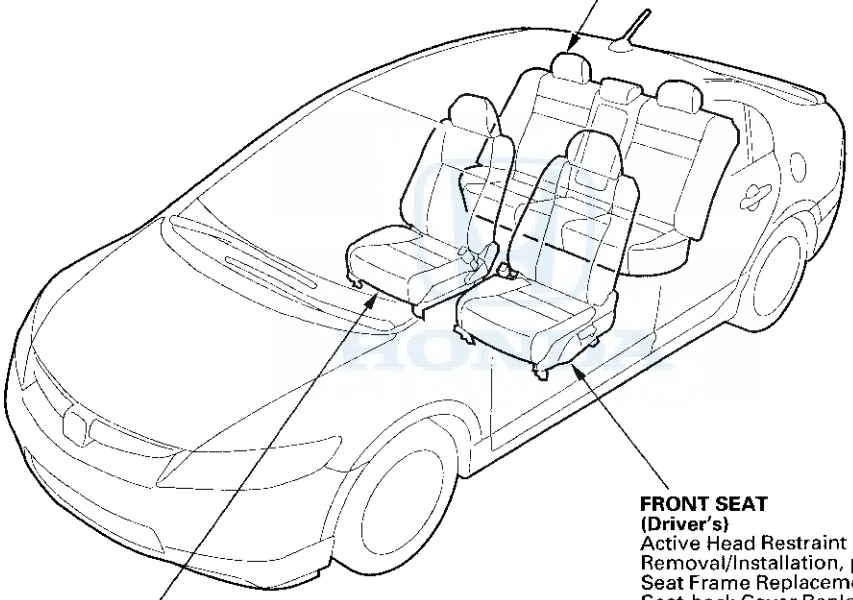

REAR SEAT
Removal/Installation, page 20-118
Seat-back Cover Replacement, page 20-119
Seat Cushion Cover Replacement, page 20-121

FRONT SEAT
(Driver's)
Active Head Restraint Inspection, page 20-104
Removal/Installation, page 20-105
Seat Frame Replacement, page 20-109
Seat-back Cover Replacement, page 20-110
Seat Cushion Cover Replacement, page 20-114

FRONT SEAT
(Passenger's)
Active Head Restraint Inspection, page 20-104
Removal/Installation, page 20-105
Seat Frame Replacement, page 20-107
Seat-back Cover Replacement, page 20-110
Seat Cushion Cover Replacement, page 20-114

Front Seat Active Head Restraint Inspection

NOTE: If the vehicle has been in a collision, always inspect the active head restraints, even if they appear reusable, by doing the following procedure.

Resetting Head Restraint Position

1. Push the head restraint (A) forward fully from the locked position to release the inertial lock (B).

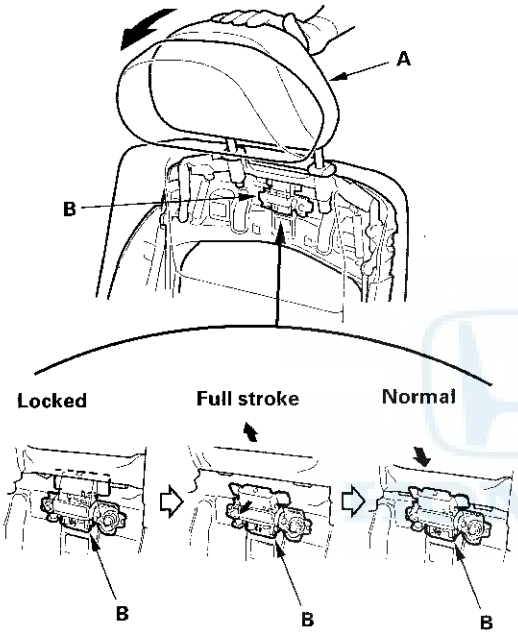

2. Slowly raise the head restraint into the normal position.

Inspection

3. Fold the seat-back forward, then recline the seat-back to the first lock position, and adjust the head restraint to the highest position.

4. Apply masking tape on the top of the head restraint.

5. Make marks (A) on both sides at 250 mm (9.84 in.) upward from the roots of the head restraint frame (B) along the back of the head restraint (C) surface. Make a center of these points as a datum point (D).

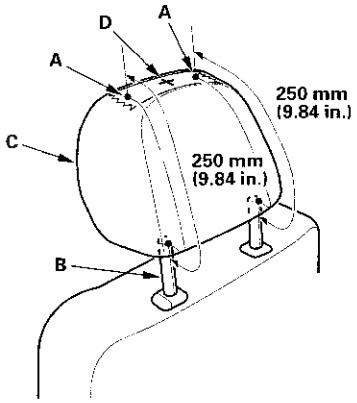

6. Push the head restraint (A) forward, and measure the level amount of the head restraint movement. The head restraint should move than 50 mm (2.0 in.) without resistance. If it is less than 50 mm (2.0 in.), or the head restraint doesn't move smoothly, replace the seat-back frame assembly:

   - Passenger's seat (see page 20-107)
   - Driver's seat (see page 20-109)

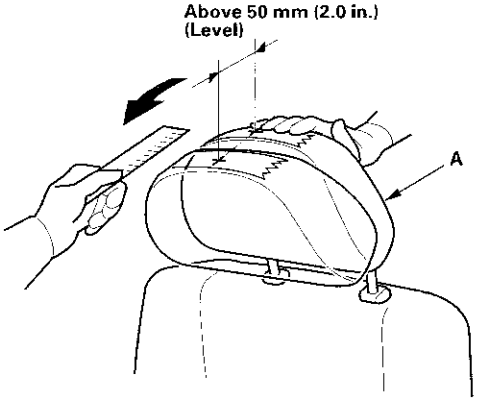

Front Seat Removal/Installation

Special Tools Required
KTC trim tool set SOJATP2014 *
* Available through the Honda Tool and Equipment Program; call 888-424-6857

SRS components are located in this area. Review the SRS component locations (see page 24-11) and the precautions and procedures (see page 24-13) before doing repairs or service.

NOTE:
- Put on gloves to protect your hands.
- When prying with a flat-tip screwdriver, wrap it with protective tape to prevent damage.
- Take care not to scratch the body or tear the seat covers.
- Use the appropriate tool from the KTC trim tool set to avoid damage when removing components.

1. Do the battery terminal disconnection procedure (see page 22-62), then wait at least 3 minutes before beginning work.

2. Tilt the steering wheel all the way up, and push it all the way in. Adjust the seat-back recline to a middle position.

3. Slide the front seat forward fully, carefully pry up on the bottom edge of the anchor cover (A) to release the hooks, and remove the cover.

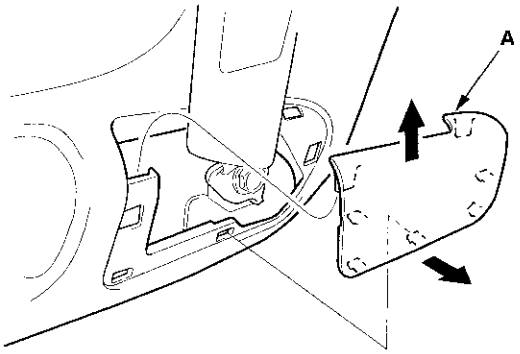

4. Remove the lower anchor bolt (A).

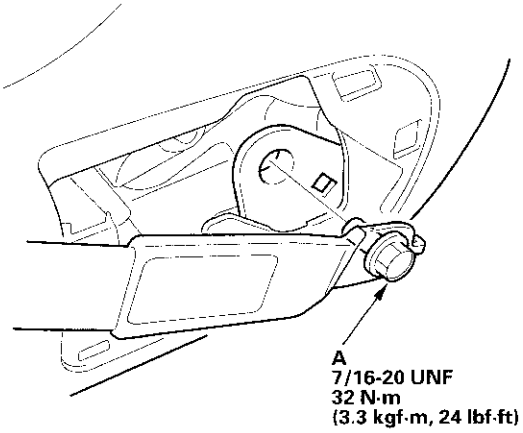

5. Remove the seat track outer end covers (A) and the seat track center end covers (B) from the back of both seat tracks.

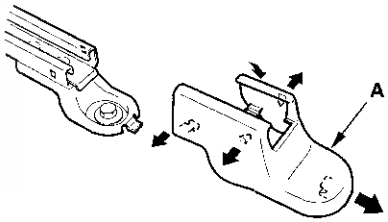

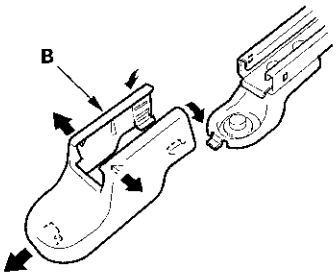

(cont'd)

Front Seat Removal/Installation (cont'd)

6. Remove the rear seat track bolts.

Fastener Locations

▶ : Bolt, 2

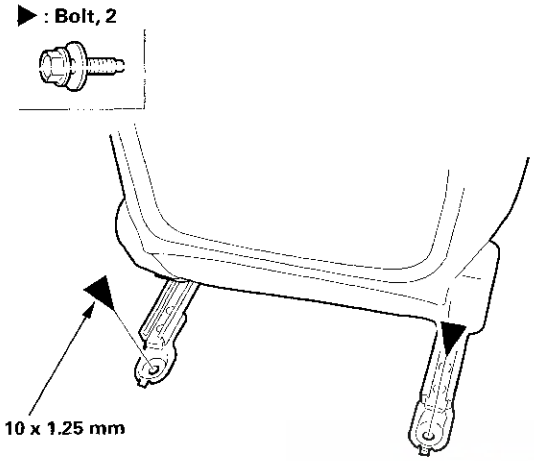

7. Slide the front seat rearward fully, and remove the front seat track bolts.

Fastener Locations

▶ : Bolt, 2

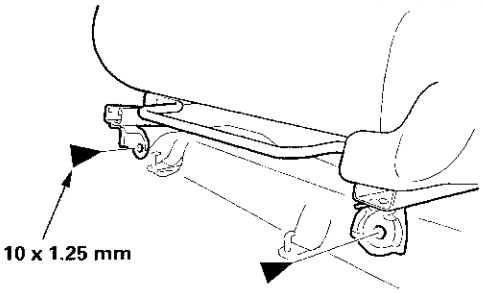

8. Lift up the front seat, then detach the harness clips (A), and disconnect the side airbag connector (B), the seat belt switch connector (C), the seat belt buckle tensioner connector (D). On the driver's seat, disconnect the seat heater subharness connector (E), if equipped, and the seat position sensor connector. On the passenger's seat, disconnect the seat heater subharness connector (F), if equipped, and the ODS unit subharness connector.

Passenger's seat

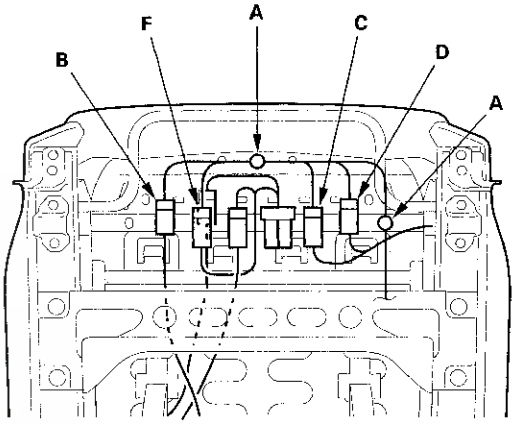

Driver's seat

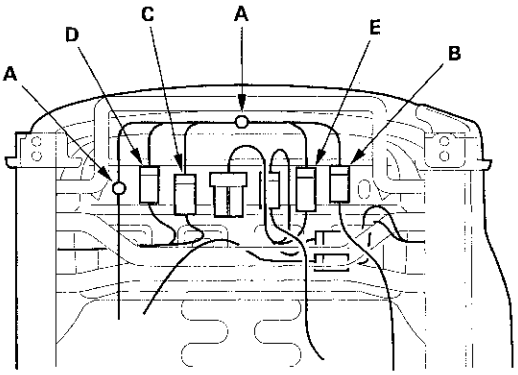

9. With the help of an assistant, carefully remove the front seat through the front door opening.

10. Install the seat in the reverse order of removal, and note these items:

    - Apply medium strength liquid thread lock to the seat mounting bolts before reinstallation.
    - Tighten the seat mounting bolts to the specified torque in the sequence shown. Slide the seat (A) all the way back and tighten ① and ②, then slide it forward and tighten ③ and ④. The driver's seat is shown; the passenger's seat is similar.
    - Tighten the bolts by hand first, then tighten them to specification with a torque wrench.
    - Make sure each connector is plugged in properly.
    - Do the battery terminal reconnection procedure (see page 22-62). If the IMA battery level gauge (BAT) displays no segments, start the engine, and hold it between 3,500 rpm and 4,000 rpm without load (in Park or Neutral) until the BAT displays at least three segments.
    - Check for any DTCs that may have been set during repairs, and clear them.

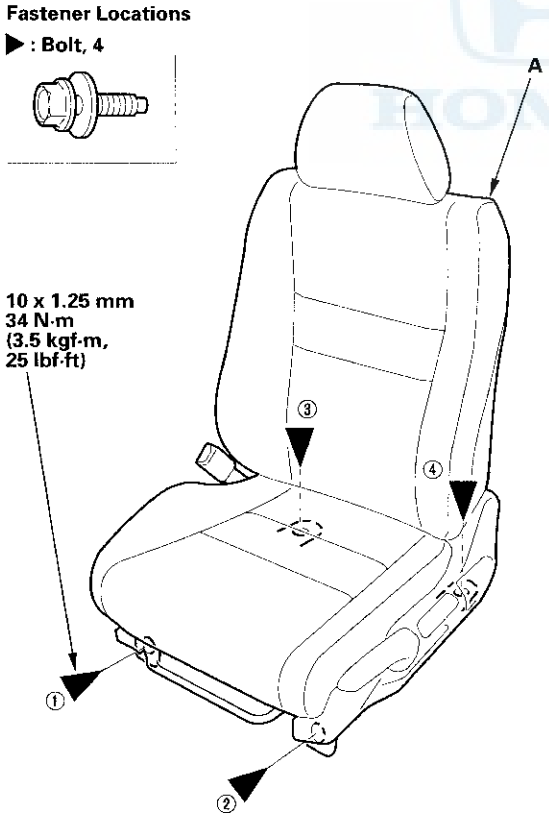

Passenger's Seat

Calibrate the ODS unit after any of these actions (see page 24-27):

- Front passenger's seat replacement (including any seat components)
- Replacement of the front seat weight sensors
- After a vehicle collision

NOTE:
- Put on gloves to protect your hands.
- Apply oil to the pivot portions of the slide locks.
- Apply multipurpose grease to the sliding portions of the seat tracks.
- If the side airbag has deployed, replace the seat frame and related parts with new ones (see page 24-181).

1. Remove the front seat (see page 20-105).

2. Remove these items:

    - Front seat-back cover (see page 20-110)
    - Front seat cushion cover (see page 20-114)
    - ODS unit (see page 24-205)
    - Front seat belt buckle (see page 24-6)

3. Remove the clip, then remove the recline inner covers (A) from the seat frame (B), and remove the module holder (C).

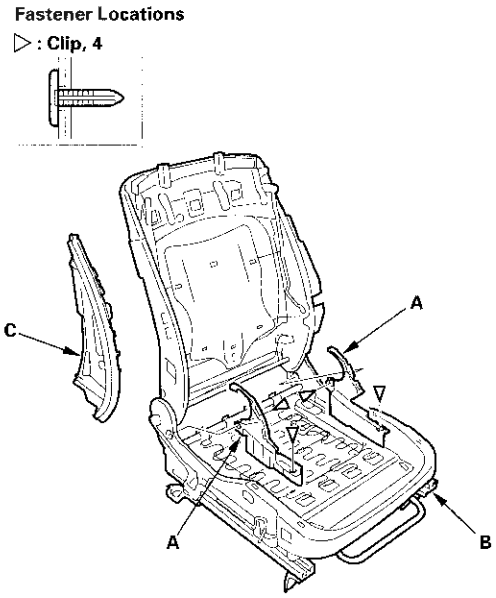

(cont'd)

Front Seat Frame Replacement (cont'd)

4. Remove the bolts, and release the seat cushion springs (A) from the hooks (B), then remove the seat cushion frame (C).

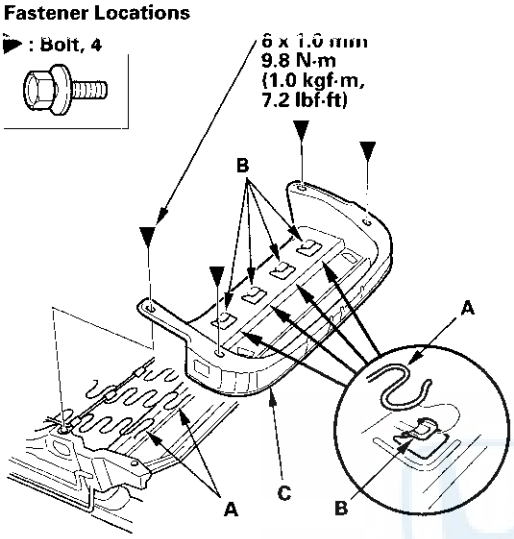

5. Remove the front seat weight sensors (see page 24-203).

6. If necessary, remove the bushing (A, B) from the seat cushion frame (C).

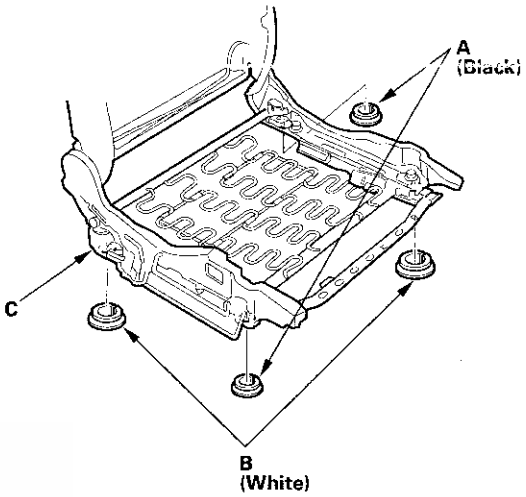

7. Install the new seat frame in the reverse order of removal, and note these items:

- Make sure the ODS unit connector is plugged in properly.
- If the clips are damaged or stress-whitened, replace them with new ones.
- Push the clips and the hooks into place securely.
- Make sure the seat wiring harnesses are routed properly and are not pinched.
- Calibrate the ODS unit, if necessary (see page 24-27).

Driver's Seat

Check the operation of the driver's seat position sensor after any of these actions (see page 24-29):

- Driver's seat position sensor replacement
- Cover plate (front side of driver's seat slide rail) replacement

NOTE:
- Put on gloves to protect your hands.
- Apply oil to the pivot portions of the slide lock.
- Apply multipurpose grease to the sliding portions and pivot portions of the seat tracks.
- If the side airbag has deployed, replace the seat frame and related parts with new ones (see page 24-181).

1. Remove the front seat (see page 20-105).

2. Remove these items:

   - Front seat back cover/pad (see page 20-110)
   - Front seat cushion cover/pad (see page 20-114)
   - Driver's seat position sensor (see page 24-207)
   - Front seat belt buckle (see page 24-6)

3. Remove the clips, then remove the recline inner covers (A), the outer upper rail cover (B), the inner upper rail cover (C) and the module holder (D) from the seat frame (E).

Fastener Locations

▷ : **Clip, 3**

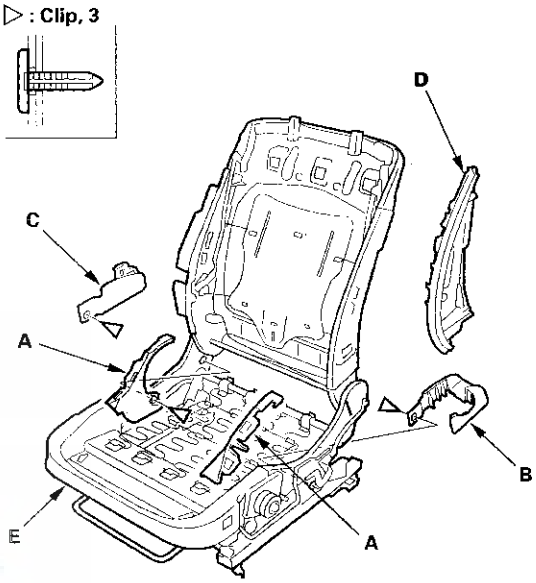

4. Install the new seat frame in the reverse order of removal, and note these items:

   - Make sure the driver's seat position sensor connector is plugged in properly.
   - If the clips are damaged or stress-whitened, replace them with new ones.
   - Push the clips into place securely.
   - Make sure the seat wiring harnesses are routed properly and are not pinched.

Front Seat-back Cover Replacement

Special Tools Required
KTC trim tool set SOJATP2014 *
* Available through the Honda Tool and Equipment Program; call 888-424-6857

SRS components are located in this area. Review the SRS component locations (see page 24-11) and the precautions and procedures (see page 24-13) before doing repairs or service.

- Check the operation of the driver's seat position sensor after any of these actions (see page 24-29):
  - Driver's seat position sensor replacement
  - Cover plate (front side of driver's seat slide rail) replacement
- Calibrate the ODS unit after any of these actions (see page 24-27):
  - Front passenger's seat replacement (including any seat components)
  - Replacement of the front seat weight sensors
  - After a vehicle collision

NOTE:
- Take care not to tear or damage the seat covers.
- On the passenger's seat, do not touch the OPDS sensor in the seat-back pad, and keep it away from oil. Oil can corrode the sensor causing it to fail.
- Put on gloves to protect your hands.

1. Remove the front seat (see page 20-105).

2. Remove the head restraint.

3. From under the seat cushion, detach the side airbag connector clip (A). On the driver's seat, disconnect the seat-back heater connector (B).

Passenger's seat

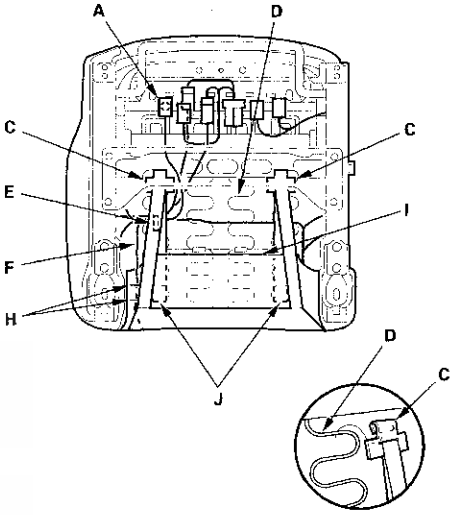

Driver's seat

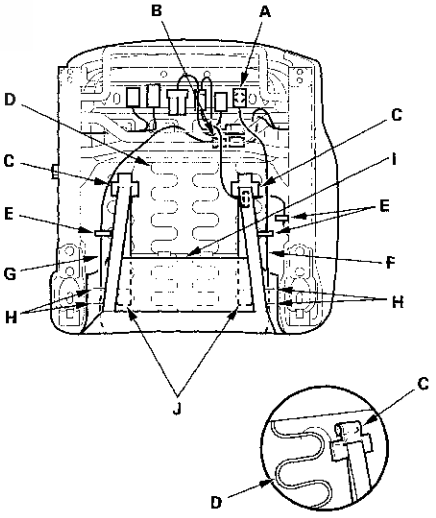

4. Release the hooks (C) from the seat cushion frame spring (D). Remove the wire ties (E) and pull the side airbag harness (F) and seat-back heater harness (G) (driver's seat) out through slits (H) in the seat cushion cover (I). Turn over the seat cushion cover, and release the hooks (J).

5. Detach the clips and hooks (A) by pulling the bottom of the back cover (B) back, then gently pull down the cover to release the hooks (C) from the seat frame, and remove the panel.

Fastener Locations

▷ : **Clip, 2**

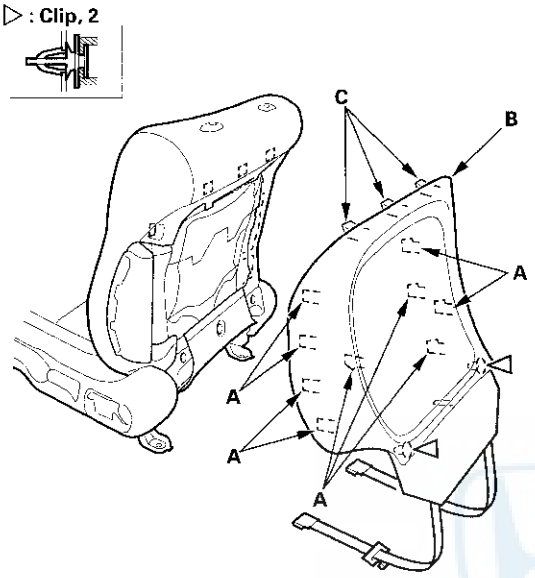

6. Pull the side airbag harness (A) out through the loop (B), and release the hook (C), then pull the seat-back cover (D) back.

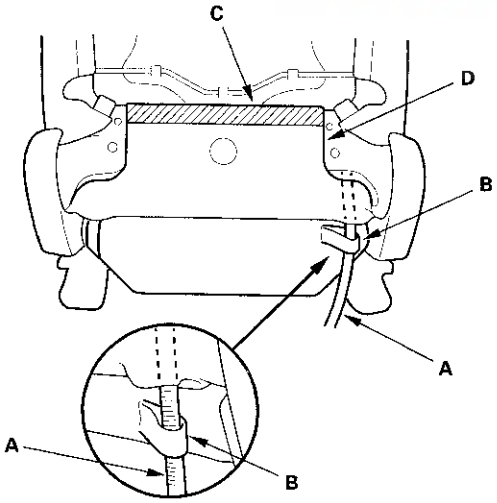

7. Detach the harness clip (A), and pull the side airbag harness (B) out through the harness hole (C) in the seat-back cover and seat frame. Passenger's seat is shown; driver's seat is similar.

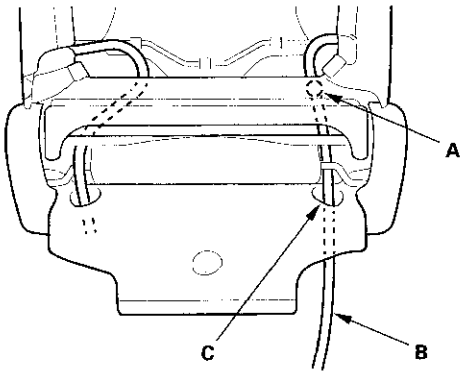

8. Remove the side airbag (see page 24-187).

9. Release the hook strips (A), then loosen the seat-back cover (B). Driver's seat is shown; passenger's seat is similar.

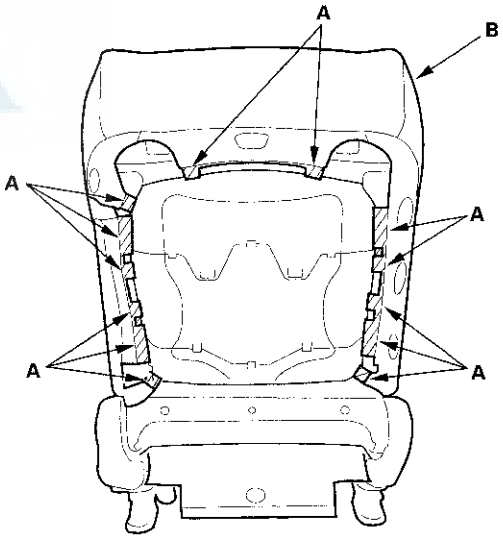

(cont'd)

Front Seat-back Cover Replacement (cont'd)

10. Turn over the reinforcing cloth (A), then release the hooks (B) from the module holder (C).

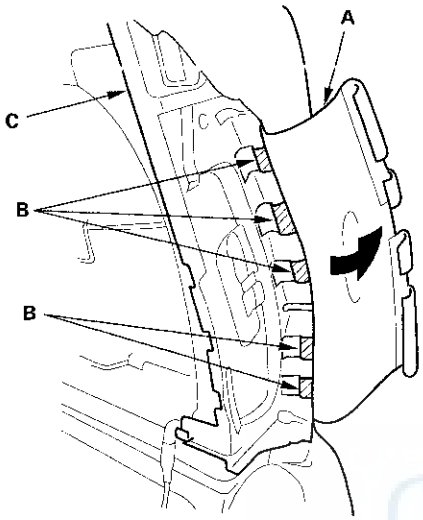

11. Passenger's seat: Disconnect the OPDS sensor connectors (A) and the ODS unit subharness connector (B) from the ODS unit (C), and pull them in through the hole in the seat frame. Pull the ODS unit subharness (D) out through the harness hole (E) in the seat-back cover (F). Detach the harness clips (G), and remove the wire tie (H).

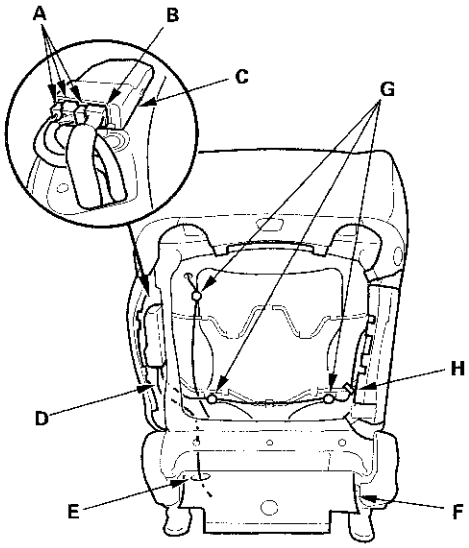

12. Pinch the tabs on the ends of the head restraint guides (A), and remove them from the seat-back.

'06-07 models

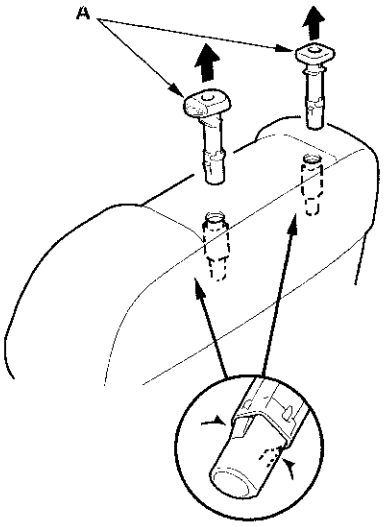

'08-09 models

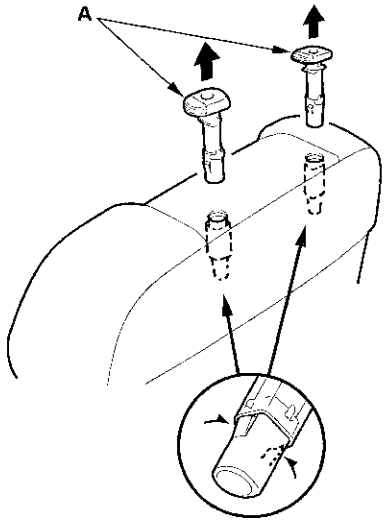

13. Remove the seat-back cover/pad (A) from the seat (B).

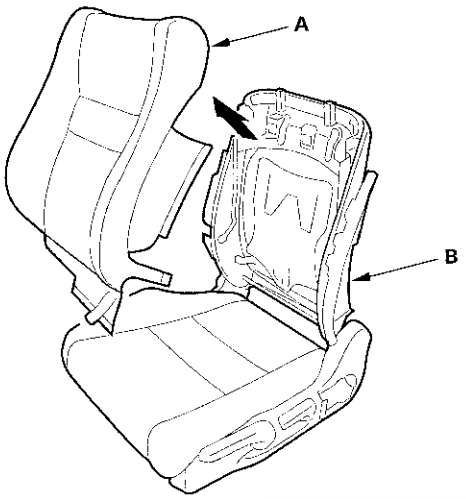

14. Pull back the edge of the seat-back cover all the way around, and release the clips (A), then remove the seat-back cover.

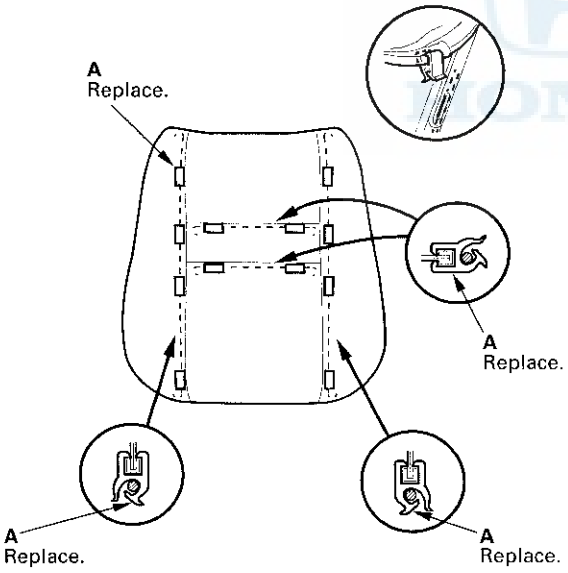

15. Install the cover in the reverse order of removal, and note these items:

- Reinitialize the ODS unit (see page 24-26).
- To prevent wrinkles when installing a seat-back cover, make sure the material is stretched evenly over the pad before securing the clips, hooks, and hook strips.
- Replace any clips (A) you removed with new ones.
- Before installing the side airbag (B), make sure the reinforcing cloth (C) is fixed on the seat-back frame (D) securely.
- Make sure the side airbag harness and seat heater harness (some driver's seat) or ODS unit subharness (passenger's seat) are routed properly.

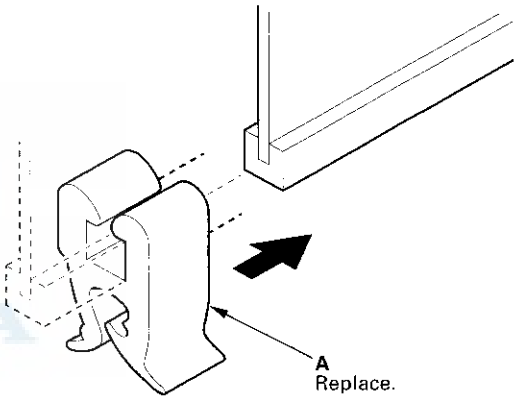

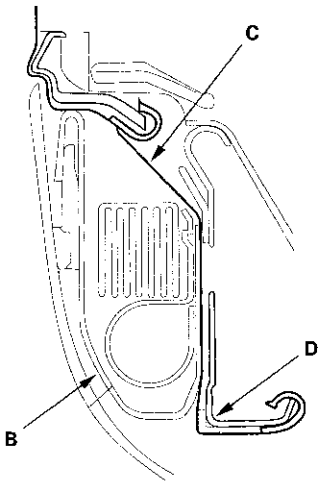

Front Seat Cushion Cover Replacement

Special Tools Required
KTC trim tool set SOJATP2014 *
* Available through the Honda Tool and Equipment Program; call 888-424-6857

SRS components are located in this area. Review the SRS component locations (see page 24-11) and the precautions and procedures (see page 24-13) before doing repairs or service.

- Check the operation of the driver's seat position sensor after any of these actions (see page 24-29):
  - Driver's seat position sensor replacement
  - Cover plate (front side of driver's seat slide rail) replacement
- Calibrate the ODS unit after any of these actions (see page 24-27):
  - Front passenger's seat replacement (including any seat components)
  - Replacement of the front seat weight sensors
  - After a vehicle collision

NOTE:
- Use the appropriate tool from the KTC trim tool set to avoid damage when removing components.
- Take care not to tear or damage the seat covers.
- Put on gloves to protect your hands.

1. Remove the front seat (see page 20-105).

2. Remove the front seat belt buckle (see page 24-6).

3. Pull back the cap (A) to release the hooks (B), and remove the screws, then remove the height adjuster handle (C).

Fastener Locations
▶ : Screw, 2

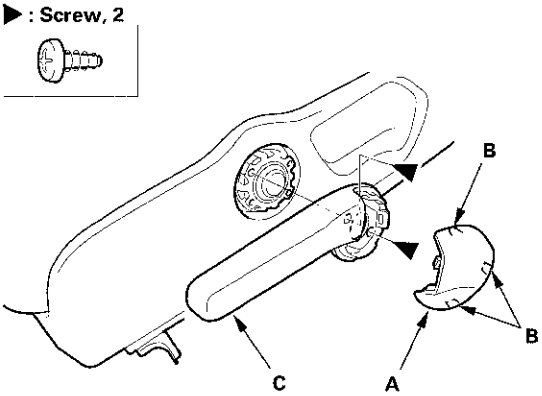

4. Remove the recline cover (A).

   -1 Remove the recline knob (B) and the screw.
   -2 Gently pull out the cover, then detach the clip, and release the hooks (C).

Fastener Locations
▶ : Screw, 1 ▷ : Clip, 1

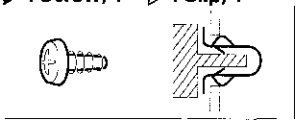

Passenger's seat

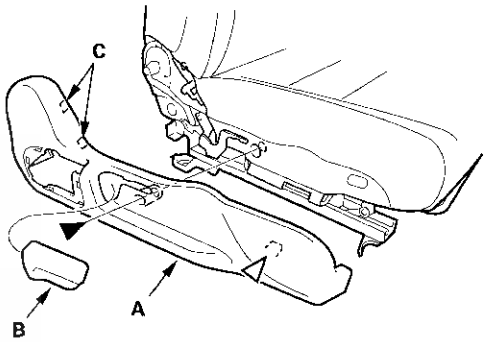

Driver's seat

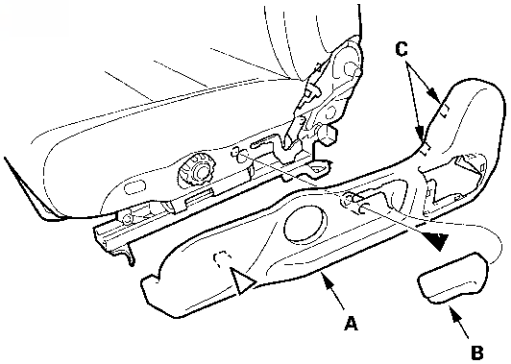

5. Gently pull out the center cover (A), then detach the clip, and release the hooks (B). Driver's seat is shown; passenger's seat is similar.

Fastener Location

▷ : **Clip, 1**

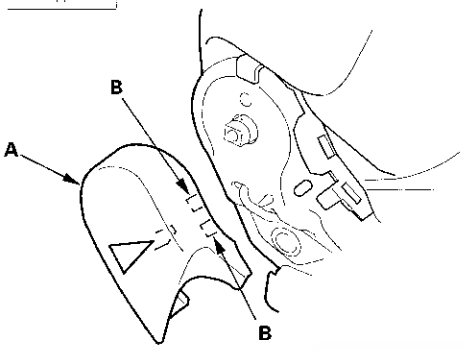

6. If equipped, disconnect the seat heater connector(s) (A) and side airbag connector (B) from under the seat cushion.

Passenger's seat

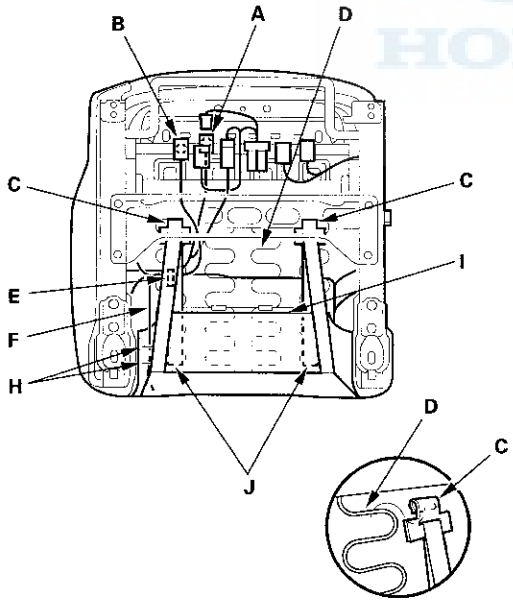

Driver's seat

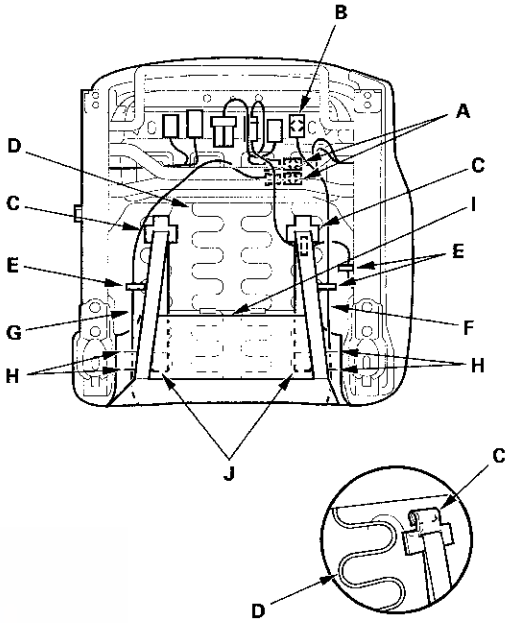

7. Release the hooks (C) from the seat cushion frame spring (D). Remove the wire ties (E), and pull the side airbag harness (F) and seat-back heater harness (G) (driver's seat) out through the slits (H) in the seat cushion cover (I). Turn over the seat cushion cover, and release the hooks (J).

8. Pull the side airbag harness (A) out through the loop (B).

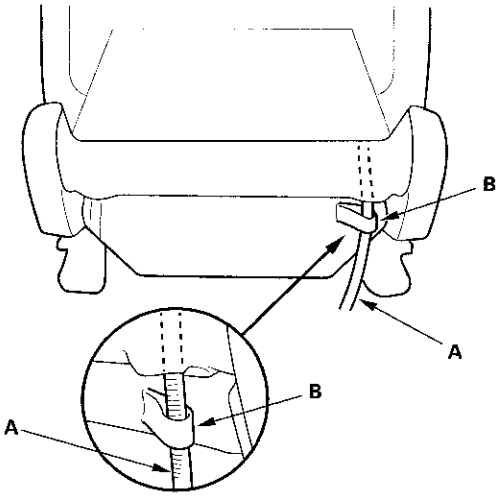

(cont'd)

Front Seat Cushion Cover Replacement (cont'd)

9. Release the hook strips (A, B) from the seat frame (C).

Passenger' seat

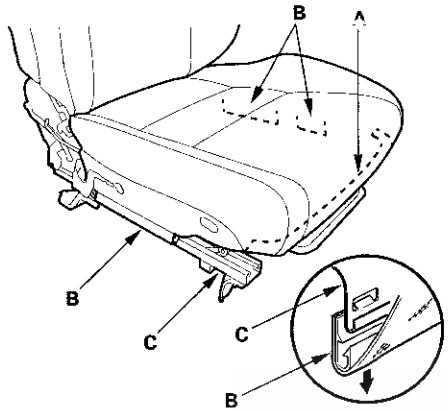

Driver's seat

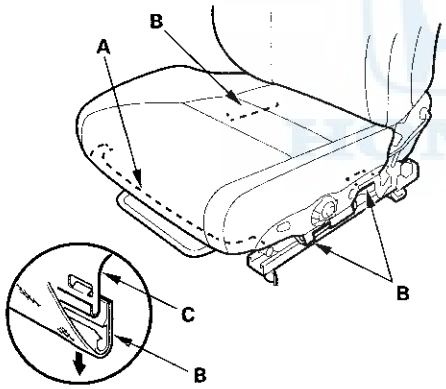

10. Release the hook (A) from under the seat cushion.

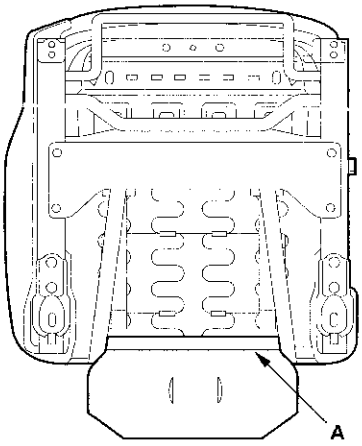

11. Remove the seat cushion cover/pad (A) from the seat frame (B).

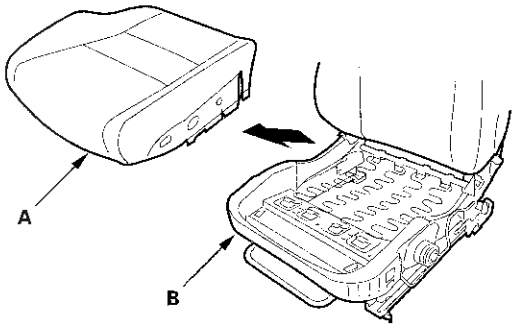

12. Release the hooks (A) from under the seat cushion (B).

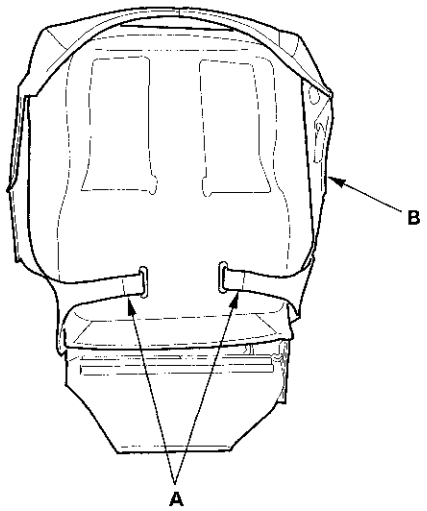

13. Pull back the edge of the seat-back cover all the way around, and release the clips (A), then remove the seat-back cover.

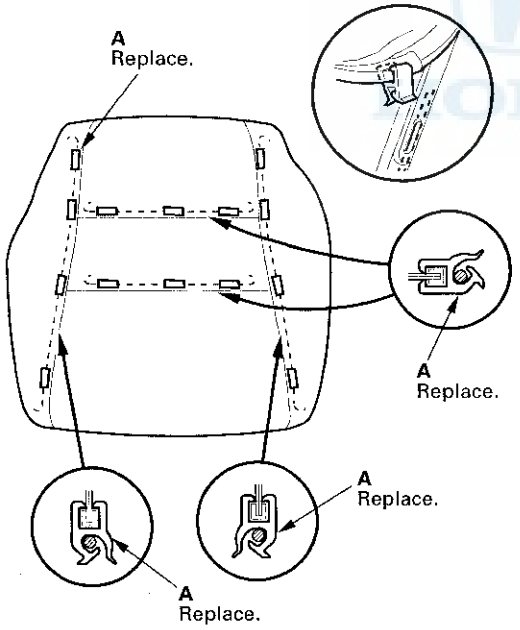

14. Install the cover in the reverse order of removal, and note these items:

- To prevent wrinkles when installing a seat-back cover, make sure the material is stretched evenly over the pad before securing the clips, the hooks, and the hook strips.
- Replace any clips (A) you removed with new ones.

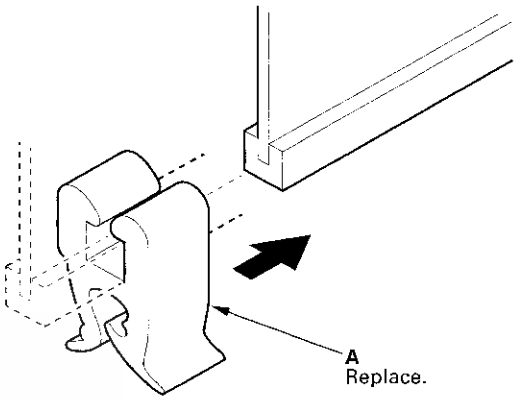

Rear Seat Removal/Installation

NOTE: Take care not to scratch the body or tear the seat covers.

1. Remove the bolt between the seat-back (A) and the seat cushion (B).

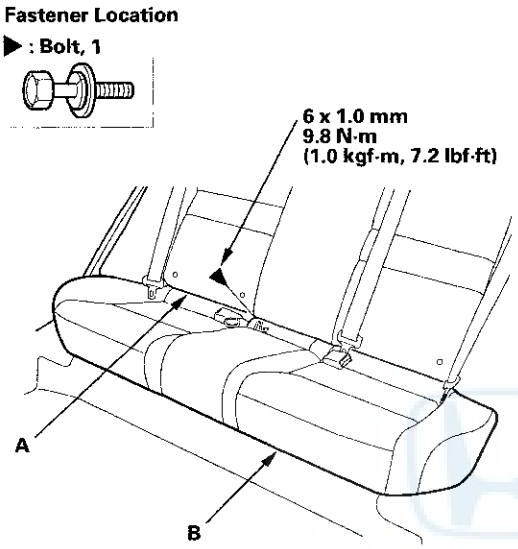

2. Pull each front edge of the seat cushion (A) up to release the hooks (B), then pull out the seat cushion, and remove it.

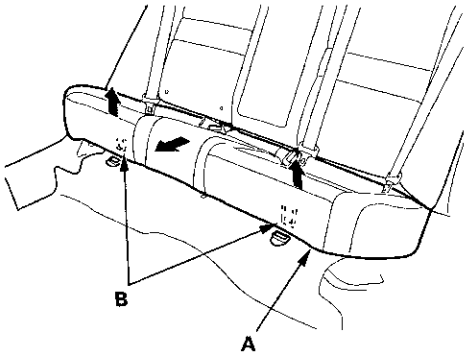

3. Remove all of the head restraints.

4. Release the center seat belt (A) from the center belt guide (B).

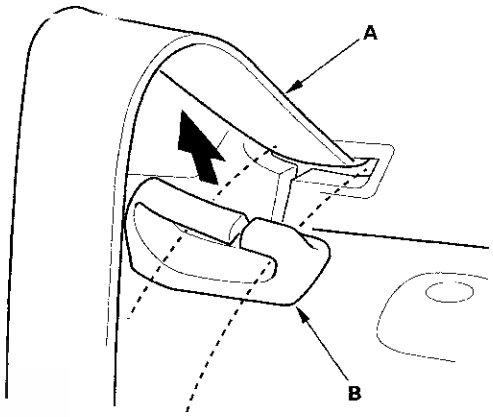

5. Remove the bolts (A, B) securing the seat-back (C).

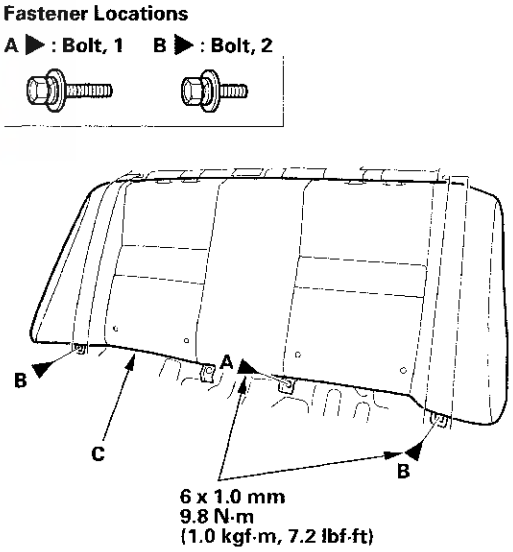

6. Lift the seat-back (A) up to release the wire loops with collars (B) from the hooks (C) on the body, then remove the seat-back.

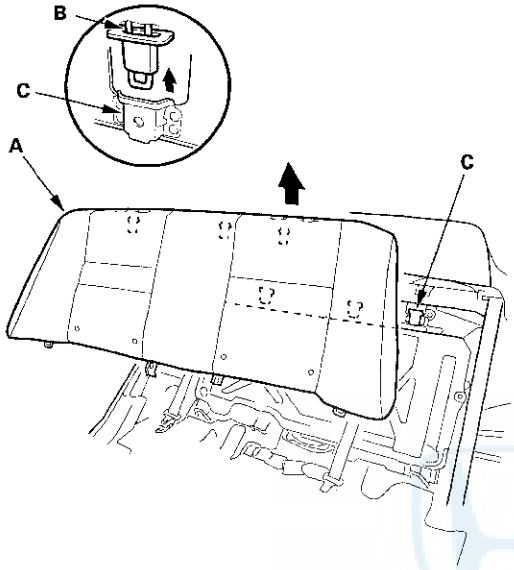

7. Install the seat in the reverse order of removal, and note these items:

   - Guide the belts over the front of the seat-back as you install it.
   - Before attaching the rear seat-back and cushion, make sure there are no twists or kinks in the seat belts.
   - When installing the seat cushion, slip the seat belt buckles through the slits in the seat cushion.

Rear Seat-back Cover Replacement

NOTE:
- Take care not to tear or damage the seat covers.
- Put on gloves to protect your hands.

1. Remove the seat-back (see page 20-118).

2. Remove the screw, then remove the center belt guide (A).

Fastener Location

▶ : Screw, 1

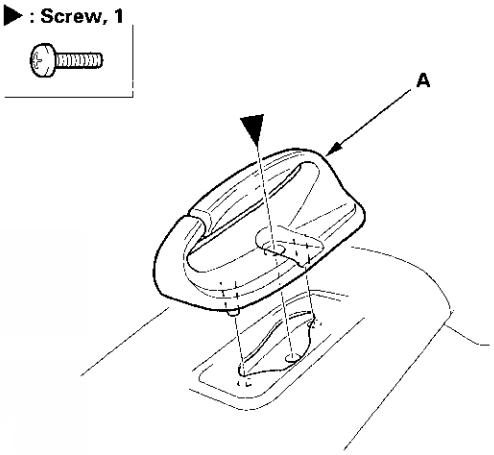

3. From the back of the seat-back, pass the four retainers (A) through the slots in the seat-back pad, release all the upholstery rings (B), and fold back the seat-back cover (C).

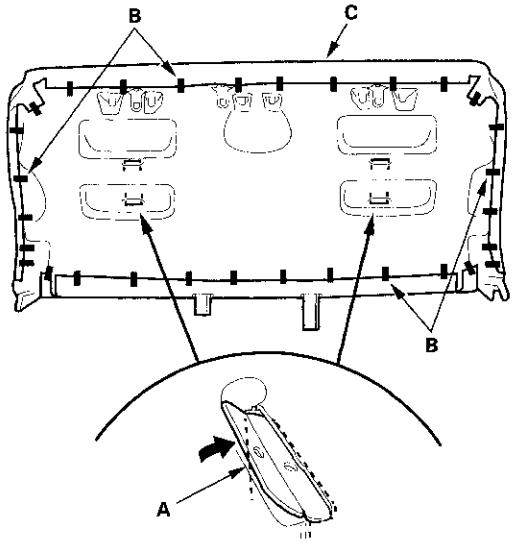

(cont'd)

Rear Seat-back Cover Replacement (cont'd)

4. Pinch the tabs on the ends of the head restraint guides (A), and remove them from the seat-back.

'06-07 models

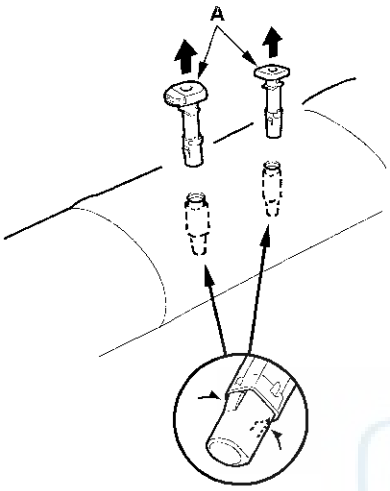

'08-09 models

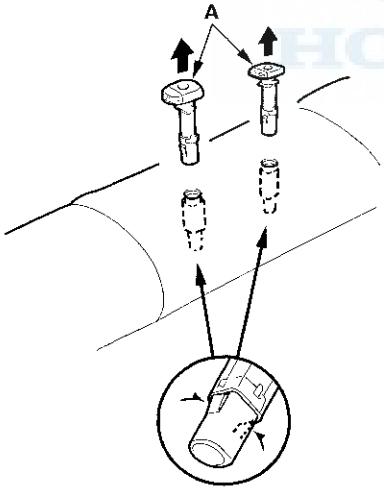

5. Pull back the edge of the seat-back cover (A) all the way around, release the upholstery rings (B), and release the hooks (C) of the horizontal wires (D) from the vertical wires (E) on the pad, then remove the seat-back cover.

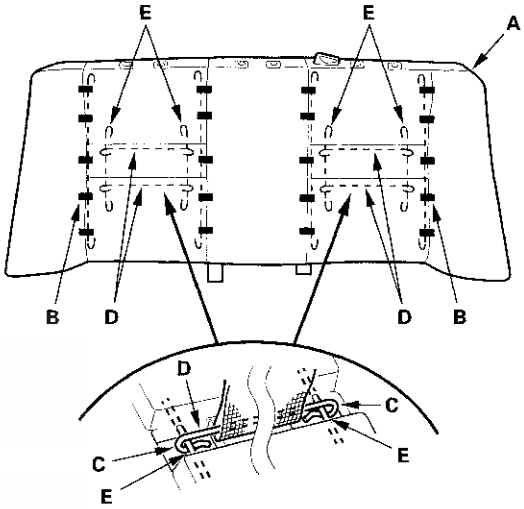

6. Install the cover in the reverse order of removal, and note these items:

- To prevent wrinkles when installing a seat-back cover, make sure the material is stretched evenly over the pad before securing the upholstery rings.
- Replace all of the upholstery rings (A) fastening the seat-back cover (B) and the pad wires (C) with new ones using commercially available upholstery ring pliers (D).

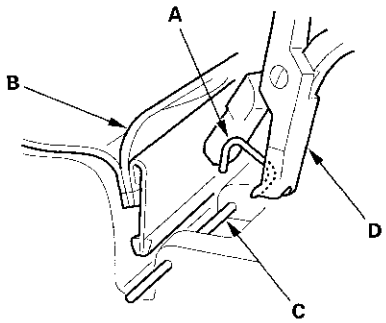

Rear Seat Cushion Cover Replacement

NOTE:
- Take care not to tear the seams or damage the seat covers.
- Put on gloves to protect your hands.

1. Remove the seat cushion (see page 20-118).

2. From the back of the seat-back, pass both lower retainers (A) through the slots in the seat cushion pad, release all the upholstery rings (B), and fold back the seat cushion cover.

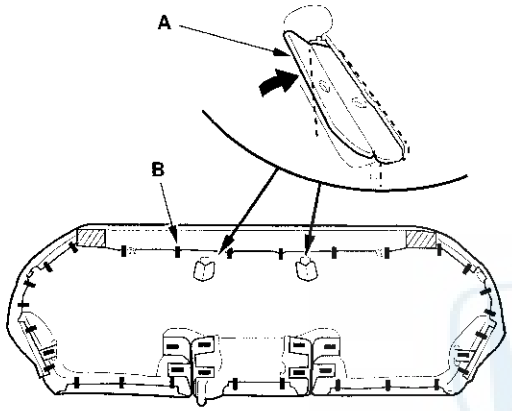

3. Pull back the edge of the seat cushion cover all the way around, and release the upholstery rings (A), from the seat cushion cover (B) through the hole in the seat cushion pad, then remove the seat cushion cover.

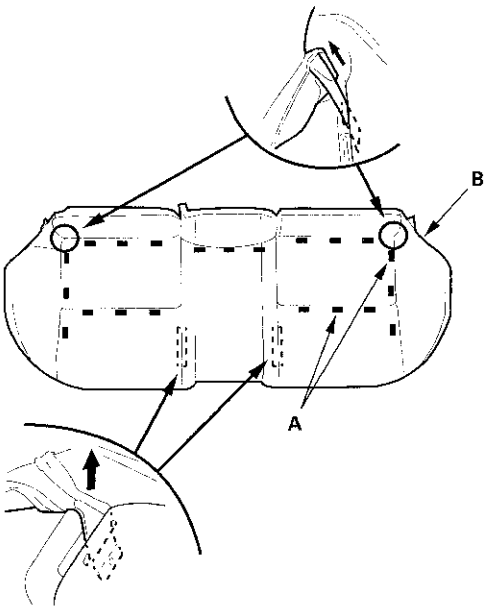

4. Install the cover in the reverse order of removal, and note these items:

   - To prevent wrinkles when installing a seat cushion cover, make sure the material is stretched evenly over the pad before securing the upholstery rings.
   - Replace all of the upholstery rings (A) fastening the seat cushion cover (B) and the pad wires (C) with new ones using commercially available upholstery ring pliers (D).

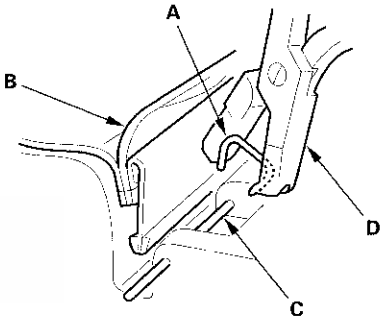

Front Bumper Removal/Installation

NOTE:
- Have an assistant help you when removing and installing the front bumper.
- Take care not to scratch the front bumper or the body.
- Put on gloves to protect your hands.

1. Remove these items:
   - Front fender trim (see page 20-138)
   - Front grille cover (see page 20-139)
2. Remove the bolts (A), the screws (B), and the clips (C, D) securing the front bumper (E).

   NOTE: To release the clips C and D, pry up on the center pin at the notch (F).

'06-08 models

Fastener Locations

A▶: Bolt, 2 B▶: Screw, 2 C▷: Clip, 4 D▷: Clip, 4

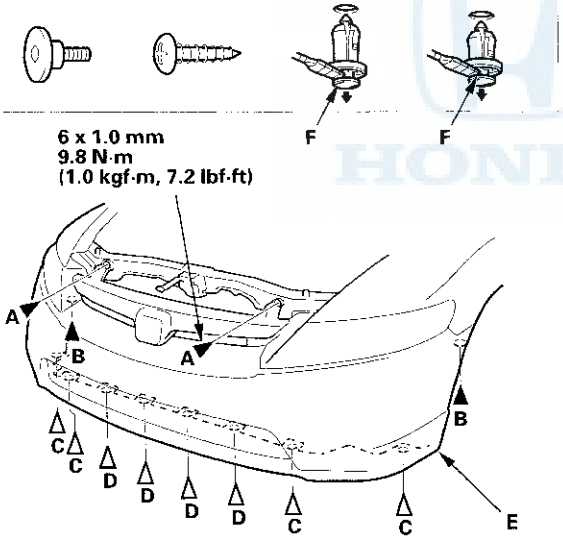

'09 model

Fastener Locations

A ▶ : Bolt, 2 B ▶ : Screw, 2 C ▷ : Clip, 4

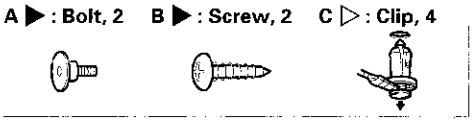

D ▷ : Clip, 6

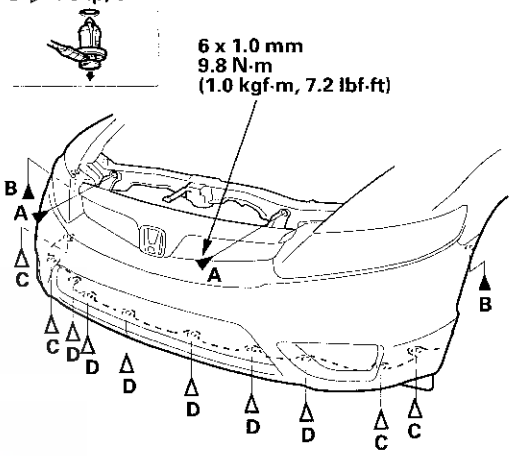

3. Pull on the front bumper (A) at the wheel arch areas to release it from the hooks (B) on the side spacers (C).

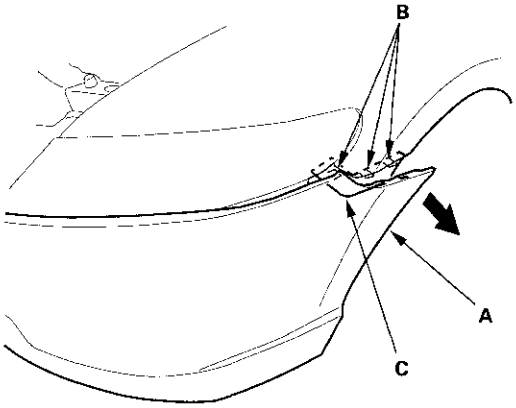

4. With the help of an assistant, while pulling the wheel arch portion away from the side spacer (A), pull the front bumper to release the bumper from the hooks (B) on the corner upper beam (C).

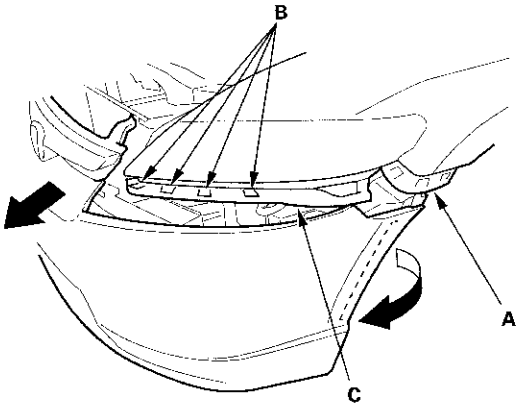

5. Remove the front bumper (A).

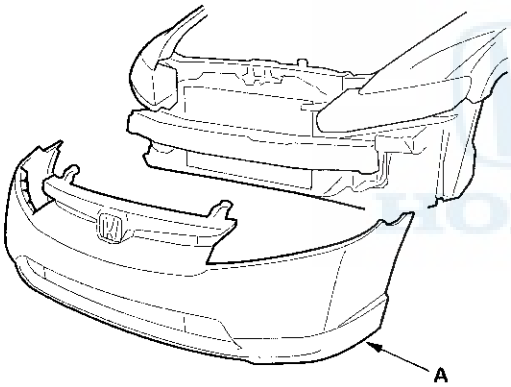

6. Release the hooks (A), then remove the front bumper absorber (B) from the front bumper beam (C).

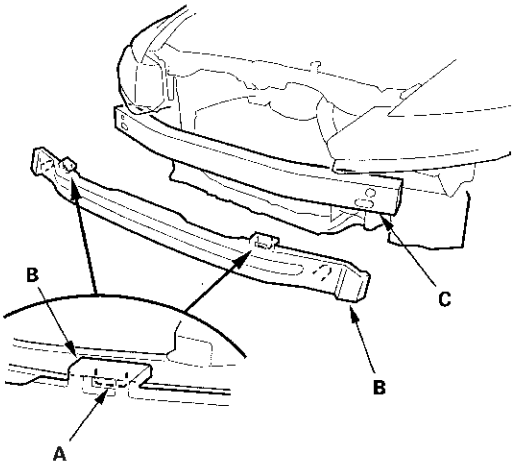

7. Install the bumper in the reverse order of removal, and note these items:

   - Make sure the front bumper engages the hooks (of both corner upper beams and side spacers) on each side securely.
   - If the clips are damaged or stress-whitened, replace them with new ones.
   - Push the clips and the hooks into place securely.

Front Bumper Lower Grille Replacement

'09 Model

NOTE:
- Take care not to scratch the front bumper.
- Put on gloves to protect your hands.

1. Remove the front bumper (see page 20-122).

2. Detach the clips and release the hooks (A, B), then remove the center front bumper lower grille (C) from the front bumper (D).

   NOTE: To release the clips, pry up on the center pin at the notch (E).

Fastener Locations

▷ : Clip, 6

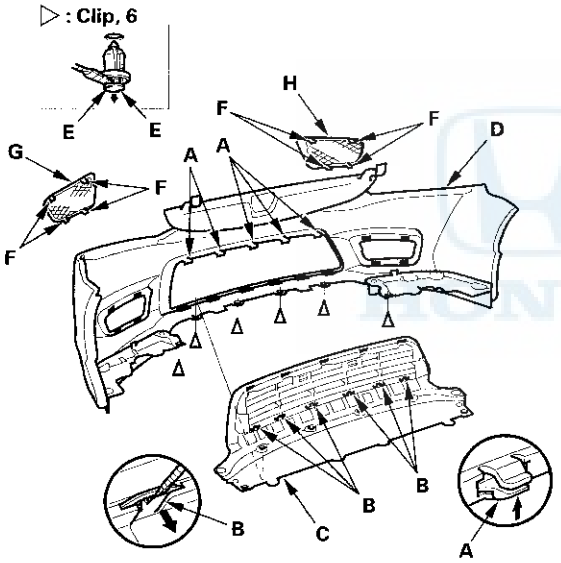

3. Release the hooks (F), then remove the left front bumper lower grille (G) and the right front bumper lower grille (H) from the front bumper.

4. Install the grille in the reverse order of removal, and note these items:

   - If the clips are damaged or stress-whitened, replace them with new ones.
   - Push the clips and hooks into place securely.

Front Air Spoiler Replacement

'06-08 Models

NOTE:
- Take care not to scratch the front bumper.
- Put on gloves to protect your hands.

1. Remove the clips (A, B) securing the air spoiler (C).

   NOTE: To release the clips A and B, pry up on the center pin at the notch (D).

Fastener Locations

A ▷ : Clip, 6 B ▷ : Clip, 2

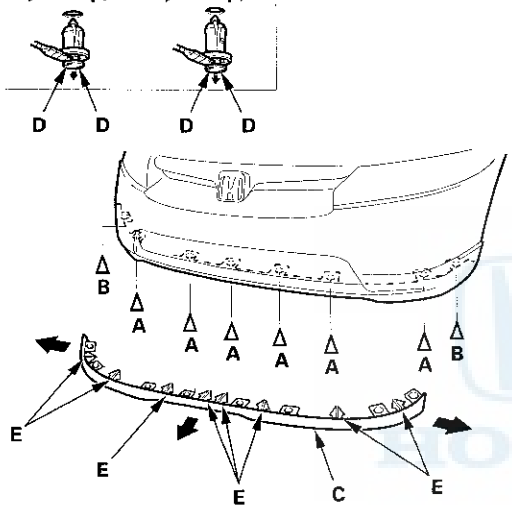

2. Pull the front air spoiler out to detach the hooks (E) and remove the spoiler.

3. Install the spoiler in the reverse order of removal:

   - If the clips are damaged or stress-whitened, replace them with new ones.
   - Push the clips and the hooks into place securely.

'09 Model

NOTE:
- Take care not to scratch the front bumper.
- Put on gloves to protect your hands.

1. Detach the clips (A), then remove the left front bumper air spoiler (B) and the right front bumper air spoiler (C) from the front bumper (D).

   NOTE: To release the clips, pry up on the center pin at the notch (E).

Fastener Locations

A, F ▷ : Clip, 16

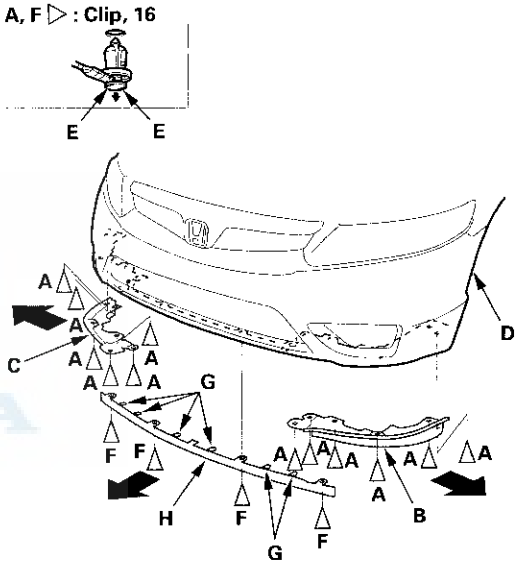

2. Detach the clips (F) and release the hooks (G), then remove the center front bumper air spoiler (H) from the front bumper.

(cont'd)

Front Air Spoiler Replacement (cont'd)

3. Install the spoiler sections in the reverse order of removal:
   - If the clips are damaged or stress-whitened, replace them with new ones.
   - Push the clips and hooks into place securely.

Front Bumper Air Deflector Replacement

NOTE:
- Take care not to scratch the front bumper.
- Put on gloves to protect your hands.

1. Remove the front bumper (see page 20-122).
2. Remove the screws, and release the hooks (A) ('09 model), then remove the front bumper air deflector (B) from the back of the front bumper (C).

'06-08 models

Fastener Locations

▶ : Screw, 5

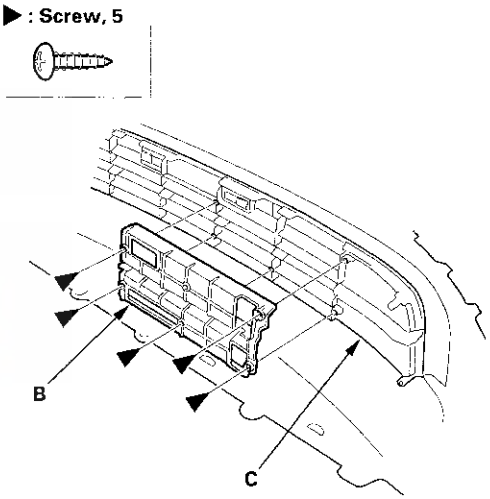

'09 model

Fastener Locations

▶ : Screw, 2

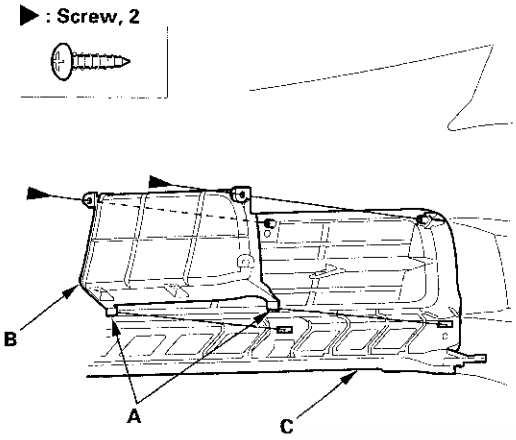

3. Install the air deflector in the reverse order of removal.

Rear Bumper Removal/Installation

NOTE:
- Have an assistant help you when removing and installing the rear bumper.
- Take care not to scratch the rear bumper or the body.
- Put on gloves to protect your hands.

1. Remove the clips (A), screws (B, C), and bolts (D) securing the rear bumper (E).

Fastener Locations

A▷: Clip, 2 B▶: Screw, 2 C▶: Screw, 6 D▶: Bolt, 2

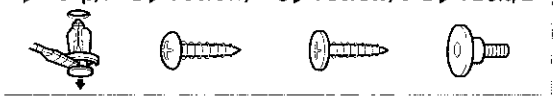

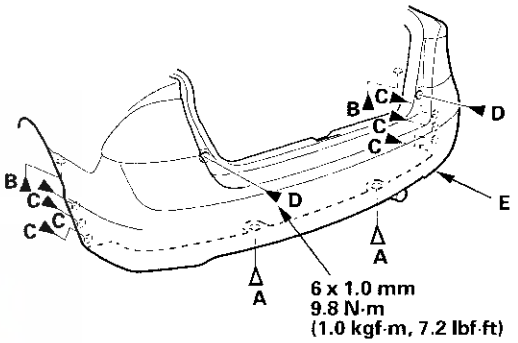

(cont'd)

Rear Bumper Removal/Installation (cont'd)

2. Pull on the rear bumper (A) at the wheel arch areas to release it from the hooks (B) on the side spacers (C).

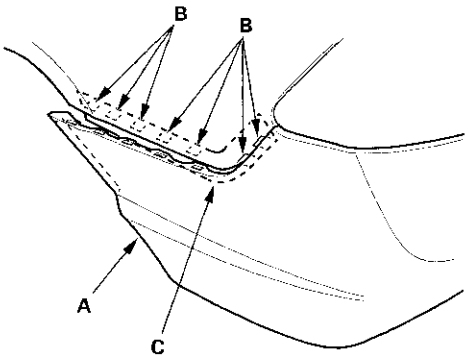

3. With the help of an assistant, while pulling the wheel arch portion away from the side spacer (A), pull the rear bumper to release the bumper from the hooks (B) on the side bracket (C).

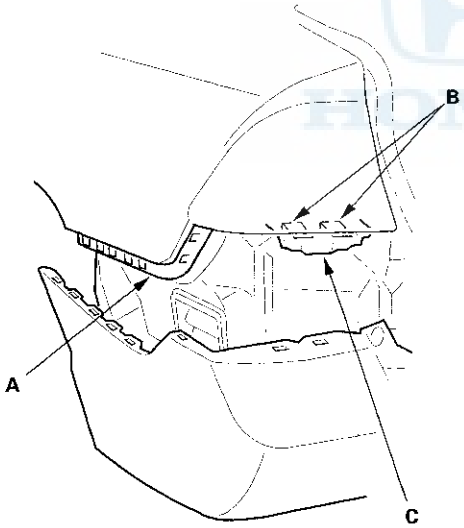

4. With the help of an assistant, pull the rear bumper to release the bumper (A) from the hooks (B) on the upper bracket (C).

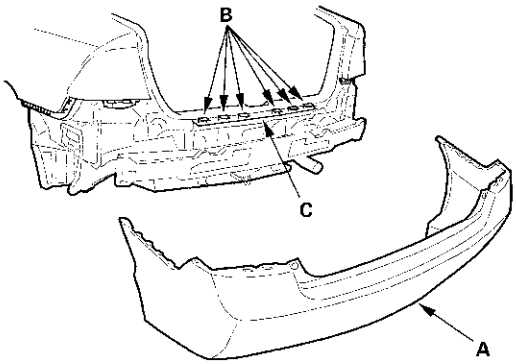

5. Remove the hooks (A), then remove the rear bumper absorber (B) from the rear bumper beam (C).

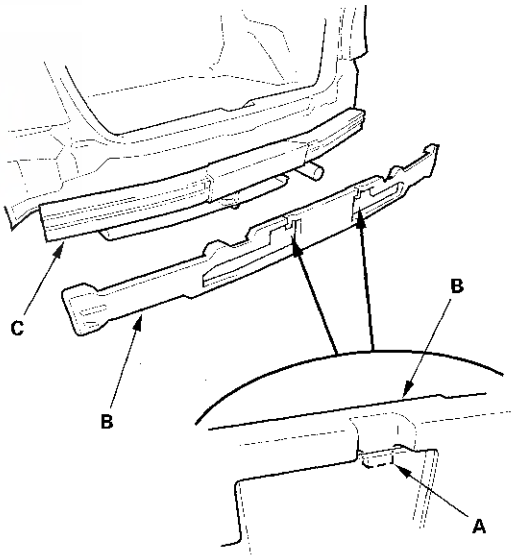

6. Install the bumper in the reverse order of removal, and note these items:

   - Make sure the rear bumper engages the hooks (of both the side bracket and side spacers) on each side securely.
   - If the clips are damaged or stress-whitened, replace them with new ones.
   - Push the clips and the hooks into place securely.

Hood Adjustment

1. Remove these items:

   - Front fender trim (see page 20-138)
   - Front grille cover (see page 20-139)
   - Cowl cover (see page 20-140)

2. Slightly loosen of the hinge mounting bolts (A) on both sides.

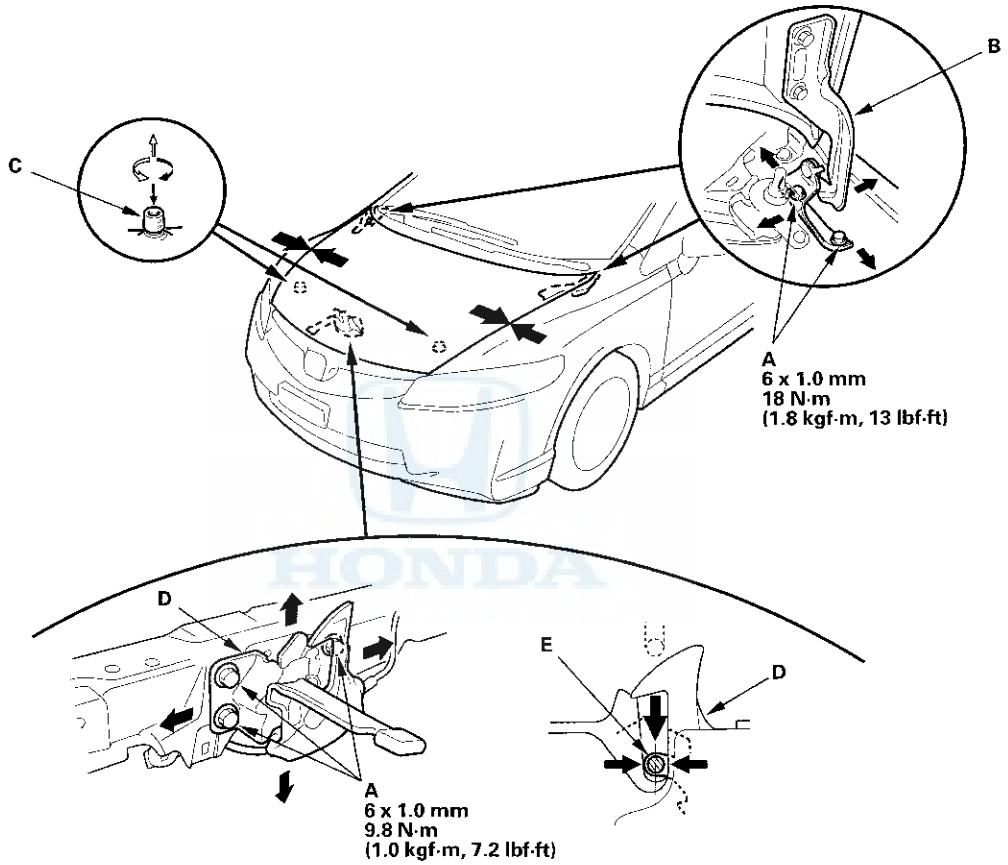

3. Adjust the hood alignment in this sequence:

   - Adjust the hood right and left, as well as forward and rearward, by using the elongated holes in the hood hinges (B).
   - Turn the hood edge cushions (C), in or out as necessary, to make the hood fit flush with the body at the front and side edges.

4. Adjust the hood latch (D) to obtain the proper position at the forward edge, and move the hood latch right or left until the striker (E) is centered in the hood latch.

5. Tighten the bolts to the specified torque.

(cont'd)

Hood Adjustment (cont'd)

6. Check that the hood opens properly and closes securely.

7. Apply touch-up paint to the hinge mounting bolts and around the hinges, and let the paint dry.

8. Apply multipurpose grease to the hood latch and hood hinges as indicated by the arrows.

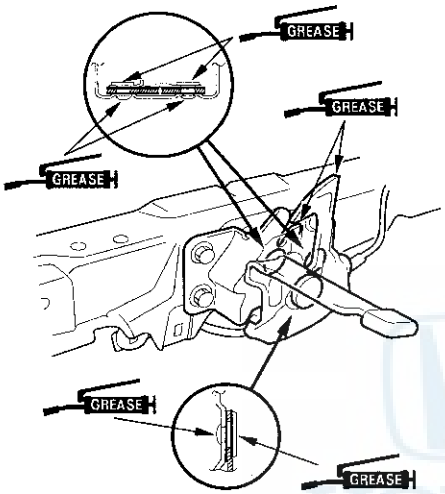

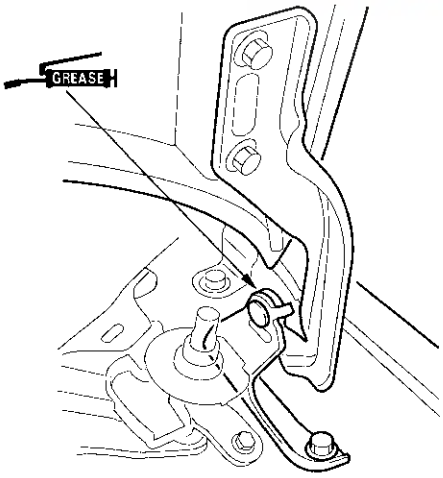

9. Reinstall all of the removed parts.

Hood Seal Replacement

1. Detach the clips with a clip remover, then remove the hood seals (A) and the hood corner seals (B). Take care not to scratch the hood.

Fastener Locations

▷ : **Clip, 12**

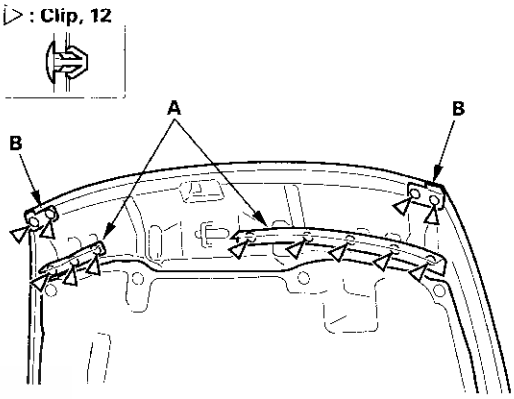

2. Install the seals in the reverse order of removal, and if the clips are damaged or stress-whitened, replace them with new ones.

Hood Insulator Replacement

1. Detach the clips with a clip remover. Release the hooks (A), then remove the hood insulator (B). Take care not to scratch the hood.

Fastener Locations

▷ : **Clip, 7**

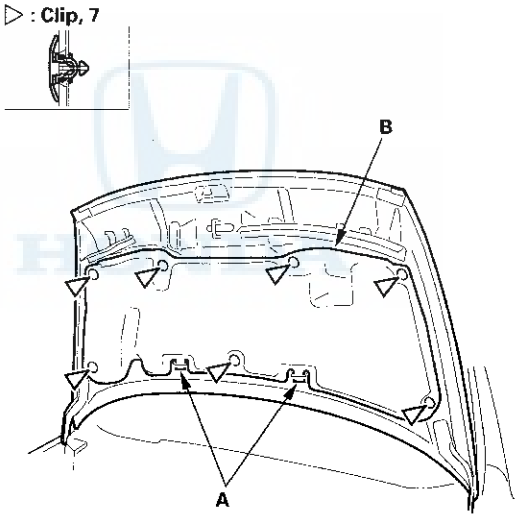

2. Install the insulator in the reverse order of removal, and note these items:

   - If the clips are damaged or stress-whitened, replace them with new ones.
   - Push the clips and the hooks into place securely.

Trunk Lid Adjustment

1. Remove the rear shelf (see page 20-66).

2. Pry up on the notch (A) to release the rear hooks (B) and pivot the striker trim cap (C) on the front hooks (D), then remove the cap.

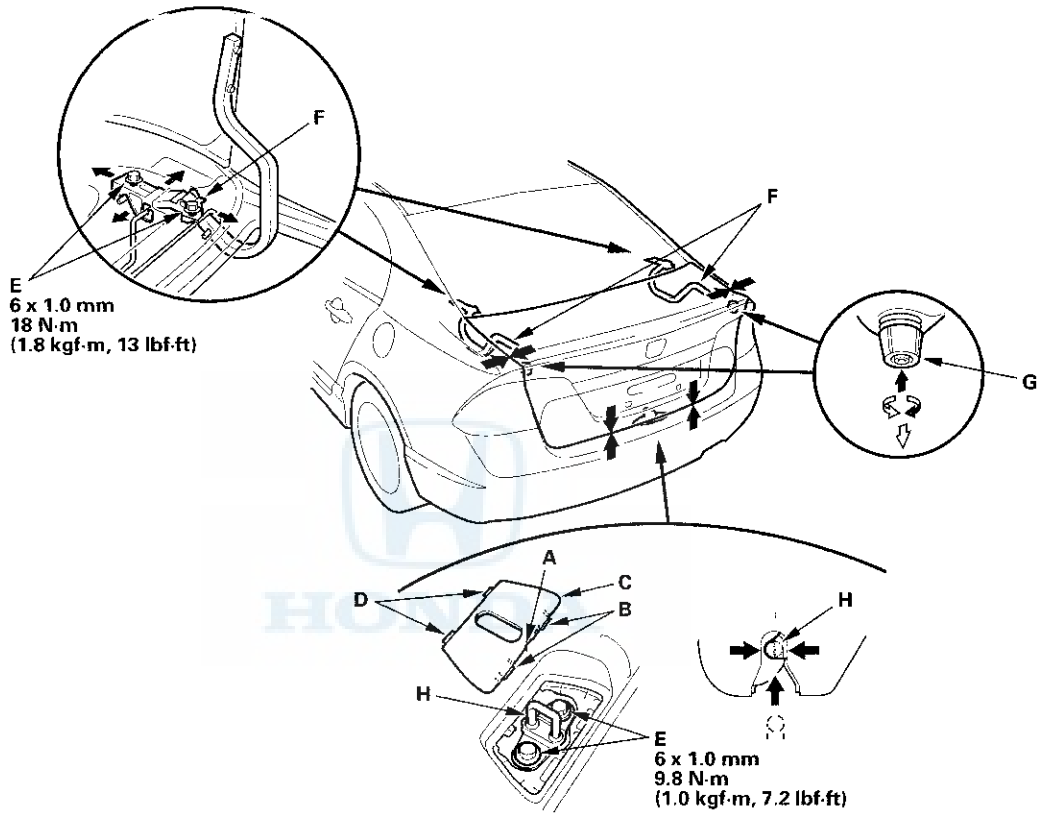

3. Slightly loosen the mounting bolts (E).

4. Adjust the trunk lid alignment in the following sequence:

   - Adjust the trunk lid hinges (F) right and left, as well as forward and rearward, by using the elongated holes. Take care not to hit the rear window when loosening the bolts.
   - Turn the trunk lid edge cushions (G), in or out as necessary, to make the trunk lid fit flush with the body at the rear and side edges.
   - Adjust the fit between the trunk lid and the trunk lid opening by moving the striker (H).

5. Tighten the bolts to the specified torque.

6. Make sure the trunk lid opens properly and locks securely.

7. Reinstall all removed parts.

Trunk Lid Torsion Bar Replacement

Special Tools Required
Torsion bar assembly tool 07AAF-SNAA100

1. Remove the torsion bars (A) from the torsion bar center clip (B).

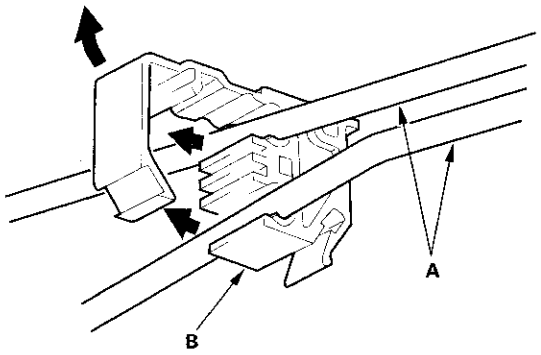

2. Put on gloves to protect your hands. Remove the torsion bars with the torsion bar assembly tool from both trunk lid hinges. First remove the left torsion bar (A), then remove the right torsion bar (B).

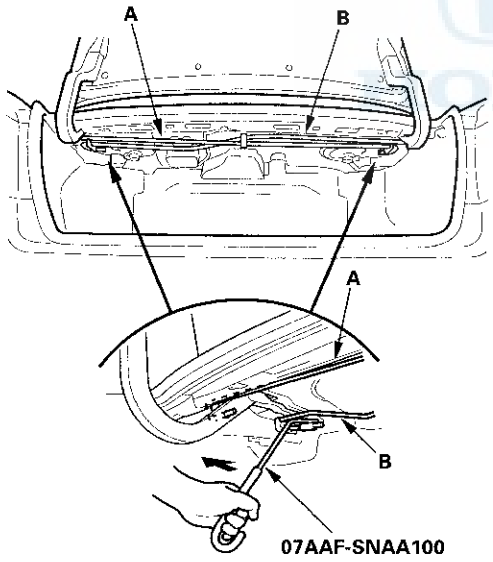

3. Remove the torsion bar center clip (A) from the body.

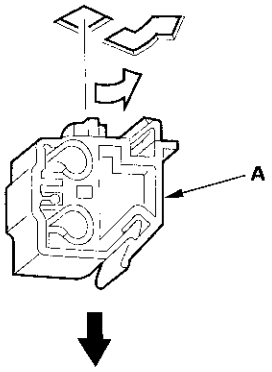

4. Install the torsion bars in the reverse order of removal, and note these items:

   - The shapes of the right torsion bar (A) and the left torsion bar (B) are shown. Install the torsion bars properly.
   - Adjust the torsion bars forward or rearward with the torsion bar assembly tool.
   - The torsion bars were installed at the factory in the normal position, as shown.
   - Make sure the trunk lid opens properly and locks securely.

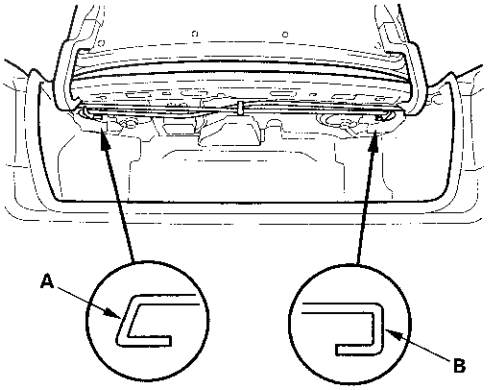

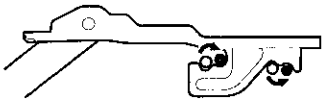

○ =Normal position
● =Higher tension

Trunk Lid Weatherstrip Replacement

1. Remove the trunk lid weatherstrip (A) by pulling it off.

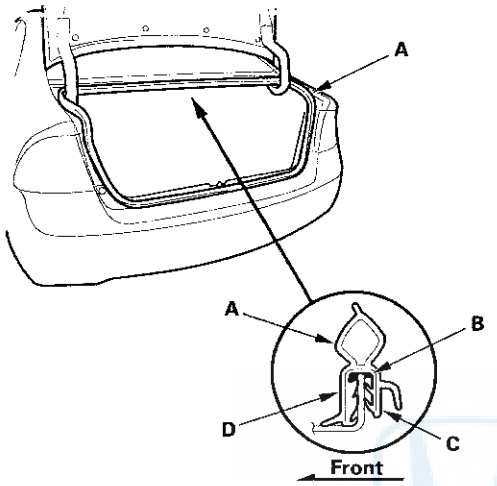

2. Apply clear weatherstrip sealant (B) into the channel of the trunk lid weatherstrip all the way around.

3. Locate the painted alignment mark (C or D) on the trunk lid weatherstrip. Align the painted mark in the center of the trunk lid opening, and install the trunk lid weatherstrip all the way around in the direction shown. Make sure there are no wrinkles in the weatherstrip.

4. Check for water leaks (see step 9 on page 20-29).

Trunk Lid Cushion Replacement

NOTE: Put on gloves to protect your hands.

1. Remove the trunk lid trim (see page 20-69).

2. Detach the clips (A) by pushing it from the hole in the trunk lid (B), then remove the trunk lid cushion (C). Take care not to scratch the trunk lid.

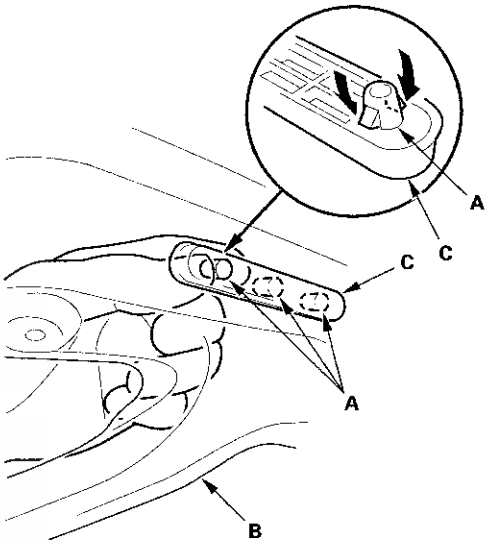

3. Install the cushion in the reverse order of removal.

Fuel Fill Door Adjustment

1. Slightly loosen the hinge mounting bolts (A).

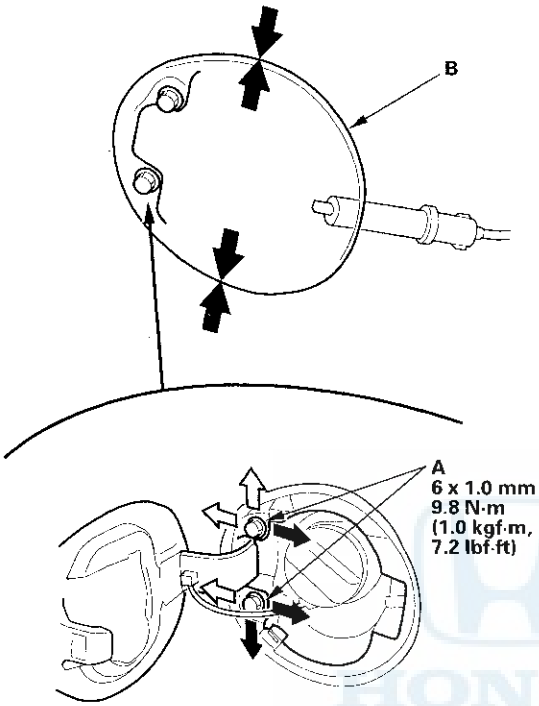

2. Adjust the fuel fill door (B) in or out until it's flush with the body, and up or down as necessary to equalize the gaps.

3. Tighten the hinge mounting bolts.

4. Check that the fuel fill door opens properly and locks securely, and check that the rear of the door is flush with the body.

5. Apply multipurpose grease to each location indicated by the arrows.

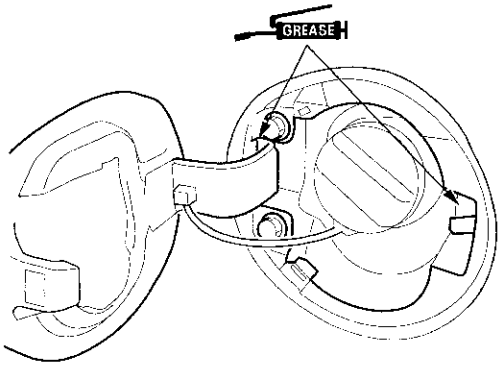

6. Apply touch-up paint to the hinge mounting bolts and around the hinges.

Fuel Cap Adapter Replacement

NOTE: Take care not to scratch the body.

1. Remove the screw, then remove the fuel cap (A) by turning it counterclockwise.

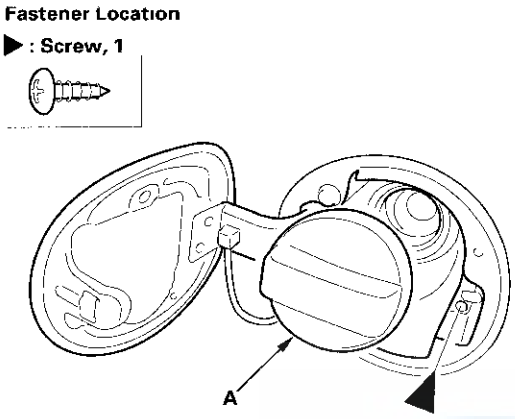

2. Remove the bolts, and the lower the fuel filler pipe (A), then remove it from the fuel cap adapter (B).

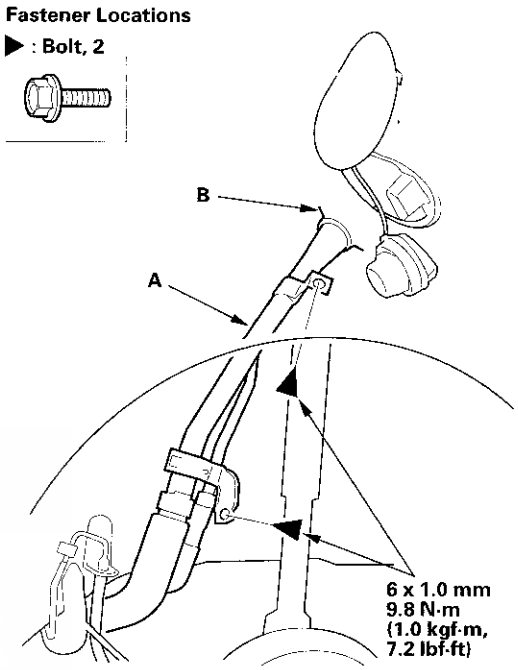

3. Turn the fuel cap adapter (A), then remove it.

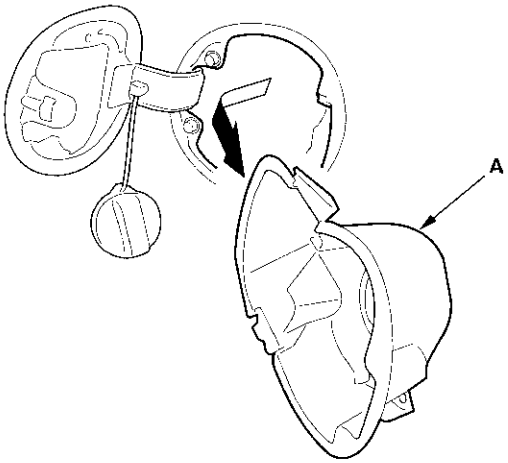

4. Install the adapter in the reverse order of removal.

Front Grille Replacement

'06-08 Models

NOTE: Take care not to scratch the bumper and grille.

1. Remove the front bumper (see page 20-122).
2. Remove the nuts, and release the hooks (A), then remove the front grille (B) from the front bumper (C).

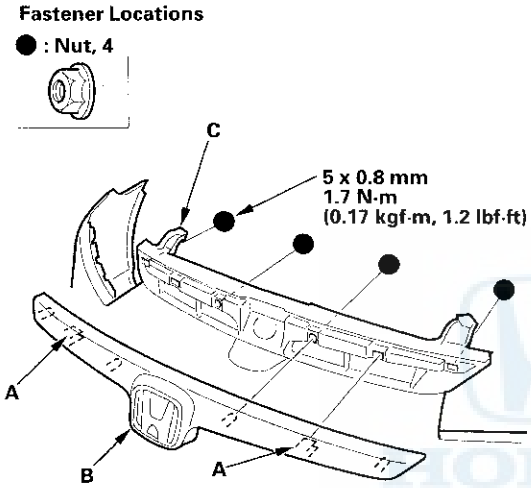

3. If necessary, remove the screw, and release the hooks, then remove the front emblem base (A) from the front grille molding (B).

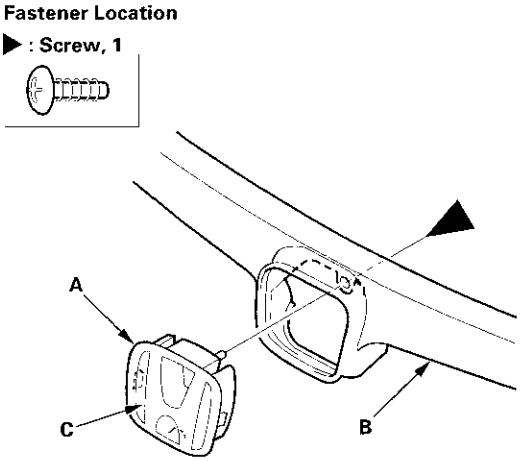

4. Replace the emblem (C), if necessary (see page 20-146).
5. Install the grille in the reverse order of removal.

'09 Model

NOTE: Take care not to scratch the bumper and grille.

1. Remove the front bumper (see page 20-122).
2. Remove the clips, then remove the front grille (A) from the front bumper (B).

   NOTE: To release the clips, pry up on the center pin at the notch (C).

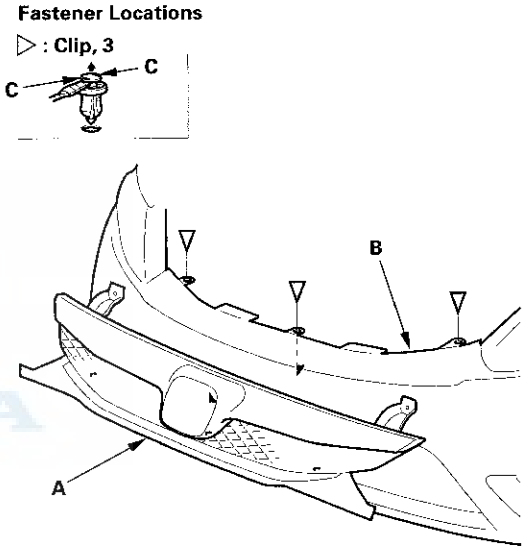

3. Remove the screws, then separate the front grille molding (A) and the front grille base (B).

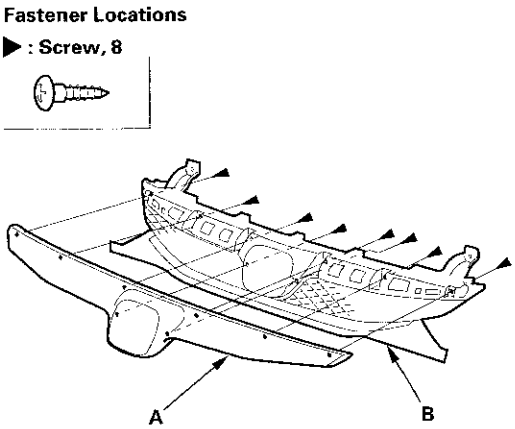

(cont'd)

Front Grille Replacement (cont'd)

4. Replace the emblem, if necessary (see page 20-146).

5. Install the grille in the reverse order of removal.

Front Fender Trim Replacement

NOTE:
- Take care not to scratch the fender trim or the body.
- Use the appropriate tool from the KTC trim tool set to avoid damage when removing components.

1. Remove the clips with a clip remover.

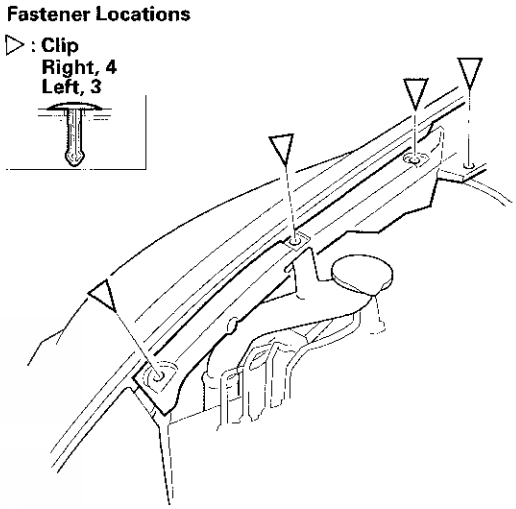

2. Disconnect the washer fill tube (A) from the washer reservoir (B). Release the hook (C), then remove the front fender trim (D) and the washer fill tube.

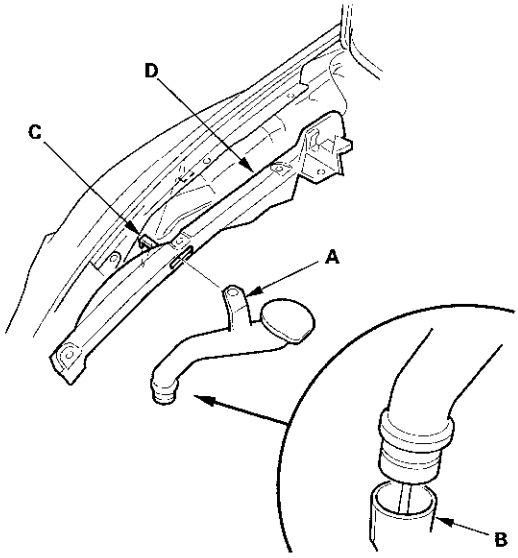

3. Install the fender trim in the reverse order of removal, and note these items:

   - If the clips (A) are damaged or stress-whitened, replace them with new ones.
   - Push the clips into place securely.

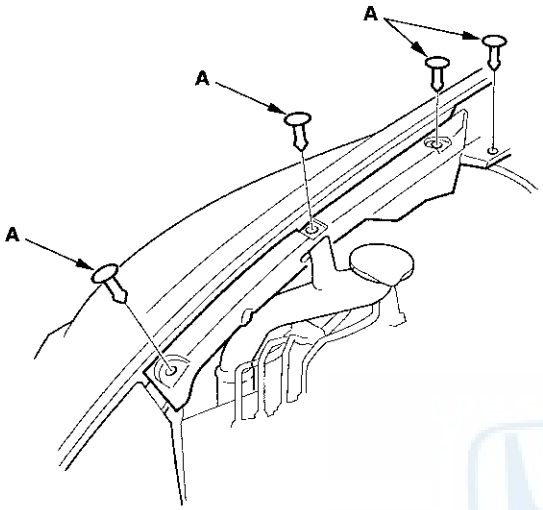

Front Grille Cover Replacement

NOTE:
- When prying with a flat-tip screwdriver, wrap it with protective tape to prevent damage.
- Take care not to scratch the bumper or the body.

1. Remove the front fender trim from both sides (see page 20-138).

2. Remove the clips by carefully pulling the front grille cover (A) up, then remove the cover by releasing the front edge of the cover from the grille (B). Take care not to scratch the body.

   NOTE: To release the clips, pry up on the center pin at the notch (C).

Fastener Locations

▷ : Clip, 2

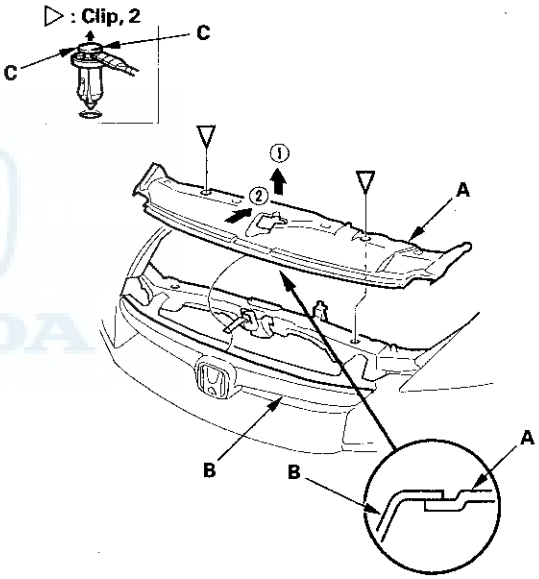

3. Install the covers in the reverse order of removal, and note these items:

   - If the clips are damaged or stress-whitened, replace them with new ones.
   - Push the clip portions into place securely.

Cowl Cover Replacement

NOTE: Take care not to scratch the body.

1. Turn the ignition switch to ON (II), then turn on the wiper switch. When the wiper arms reach about 90 °, quickly turn the ignition switch to LOCK (0).

2. Remove the center cowl cover (A).

   -1 Remove the hood rear seal (B) by pu lling it out.
   -2 Remove the clips (C).
   -3 Release three front hooks (D) from the edge of the under-cowl panel (E).
   -4 Detach the clips (F, G) by carefully pulling the cover up, then remove the cover by releasing the hooks (H). Take care not to scratch the body.

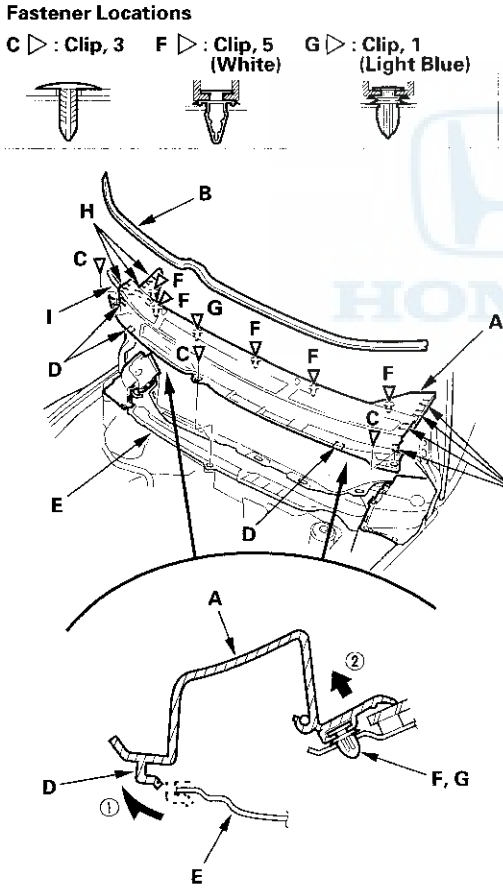

3. Disconnect the windshield washer tube (I).

4. If necessary, remove the bolts (A, B), then remove the under-cowl panel (C).

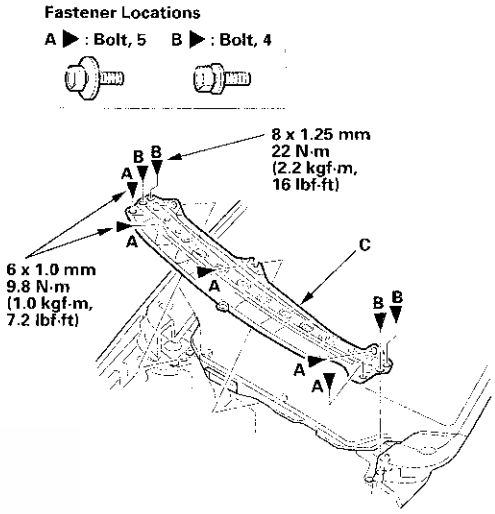

5. Remove these items:

   - Windshield wiper arms (see page 22-215)
   - Front fender trim, both sides (see page 20-138)

6. Detach the clips by carefully pulling the side cowl cover (A) up, then remove the cover by releasing the hooks (B) from the front fender. Take care not to scratch the body. Repeat this step for the other side cowl cover, and disconnect the windshield washer tube.

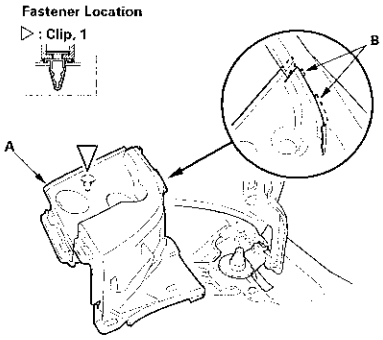

7. Install the parts in the reverse order of removal, and note these items:

   - If the clips are damaged or stress-whitened, replace them with new ones.
   - Make sure the washer tubes are connected securely.
   - Push the clips and the hooks into place securely.

Roof Molding Replacement

Special Tools Required
KTC trim tool set SOJATP2014 *
* Available through the Honda Tool and Equipment Program; call 888-424-6857

Molding Replacement

NOTE:
- Put on gloves to protect your hands.
- Take care not to damage the windshield.
- Do not use any metallic tools to remove the roof molding, or you may damage the windshield.
- Use the appropriate tool from the KTC trim tool set to avoid damage when removing components.
- Take care not to bend the roof molding.

1. Remove the cowl cover (see page 20-140).

2. Detach the bottom clip (A) at the lower corner of the windshield.

Fastener Location
A ▷ : Clip

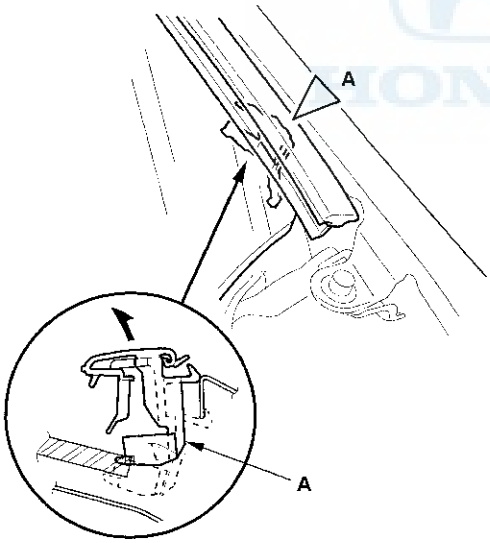

3. Remove the windshield portion of the roof molding (A).

   -1 Carefully insert a plastic spatula (B) in under the molding next to the lower clip (C).
   -2 While pulling the clip portion of the molding up by hand, push the hooks (D) to release the clip from the retainer (E). Do not pry on the windshield trim with any tools.
   -3 Gradually work your way up to release each of the clips (F, G).

Fastener Locations
C, F ▷ : Clip (Light Green)
G ▷ : Clip (Light Yellow)

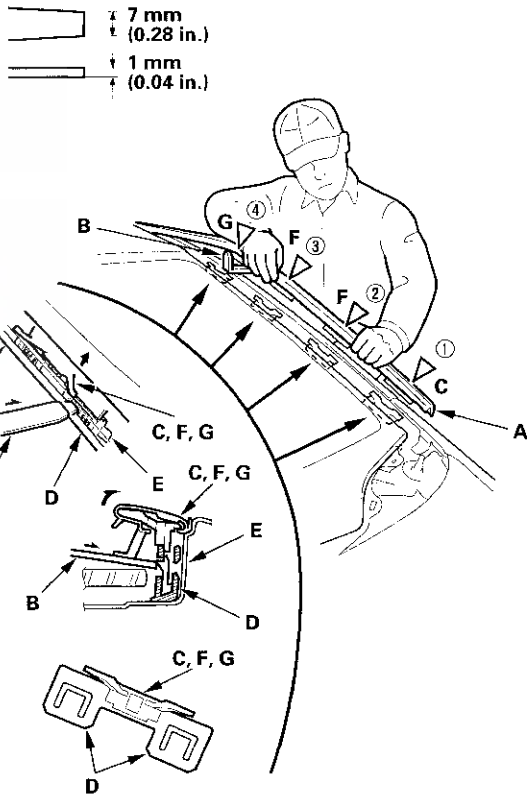

(cont'd)

Roof Molding Replacement (cont'd)

4. Pull up the middle portion of the roof molding (A) to release it from the retainers (B).

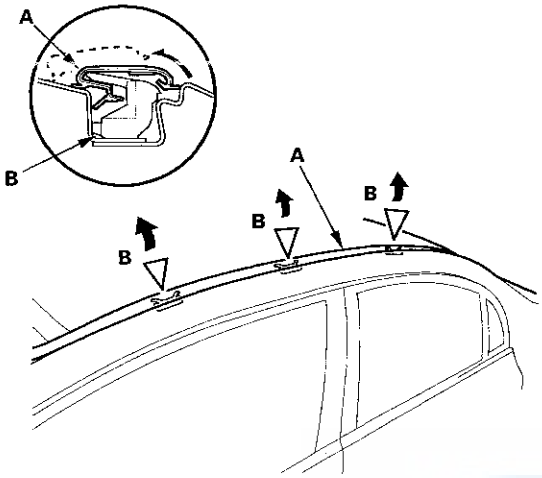

5. Pull up and release the rear end of the roof molding (A) from the pin (B), then remove the roof molding.

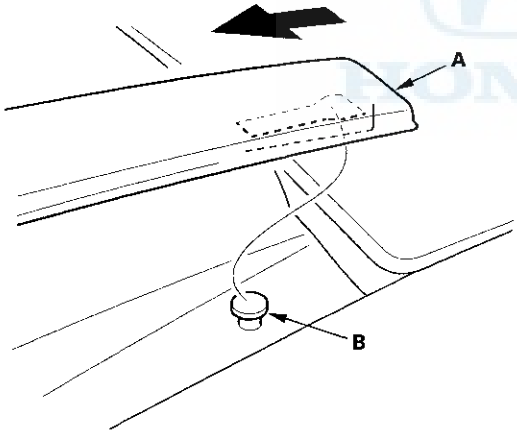

6. Install the molding in the reverse order of removal, and note these items:

   - Make sure the roof molding is installed securely.
   - If the clips are damaged or stress-whitened, replace them with new ones.
   - Make sure the windshield wipers operate normally.

Retainer Replacement

1. While prying the middle hooks (A) with a flat-tip screwdriver, slide the upper retainers (B, C) upward to release them from the pins (D) on the A-pillar and the roof drip portion. Take care not to scratch the body.

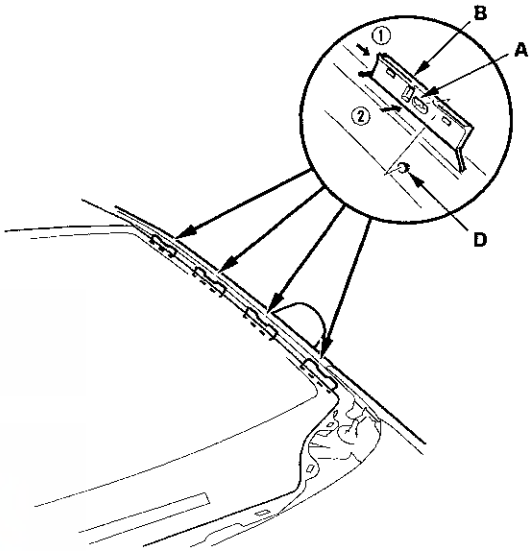

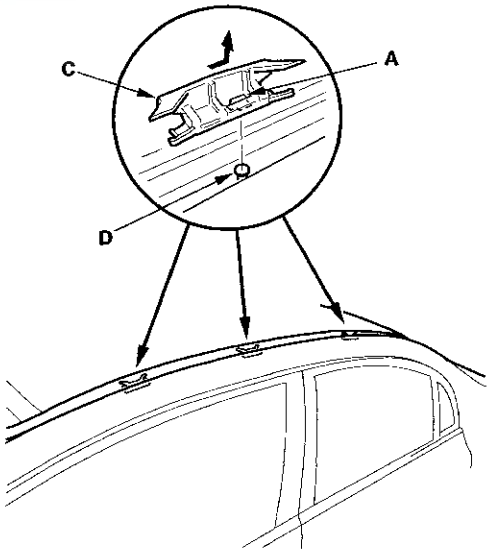

2. Install the retainers in the reverse order removal.

Door Molding Replacement

NOTE:
- Be careful not to pry too far or you may bend the molding.
- Put on gloves to protect your hands.
- When removing components, use the trim tool or equivalent.

1. Remove these items:

   - Front door panel (see page 20-7) and plastic cover (see step 2 on page 20-14)
   - Rear door panel (see page 20-17) and plastic cover (see step 3 on page 20-19)

2. Release the clips, and gently pry the front door molding (A) or the rear door molding (B) away from the door while separating the adhesive tape (C, D, E, F).

   Adhesive tape (C): Thickness 1.2 mm (0.047 in.) Width 5 mm (0.2 in.) Length 30 mm (1.2 in.)
   Adhesive tape (D): Thickness 1.2 mm (0.047 in.) Width 10 mm (0.4 in.) Length 930 mm (36.6 in.)
   Adhesive tape (E): Thickness 1.2 mm (0.047 in.) Width 10 mm (0.4 in.) Length 580 mm (22.8 in.)
   Adhesive tape (F): Thickness 1.2 mm (0.047 in.) Width 5 mm (0.2 in.) Length 24 mm (0.9 in.)

Fastener Locations

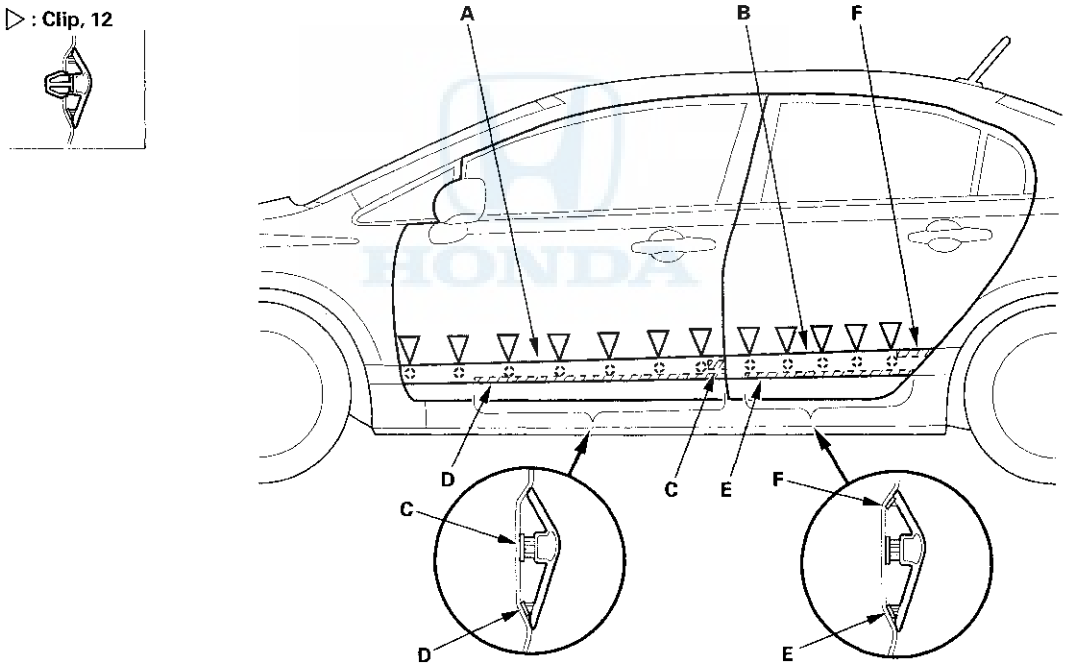

3. Install the moldings in the reverse order of removal, if the clips are damaged or stress-whitened, replace them with new ones.

Side Sill Protection Tape Replacement

1. Slowly peel up the old side sill protection tape.
2. Clean the body bonding surface with a shop towel dampened in isopropyl alcohol. After cleaning, keep oil, grease, and water from getting on the surface.
3. Peel the adhesive backing from the side sill protection tape.
4. Align the alignment marks (A) of the side sill protection tape (B) with the body line (C), and align the alignment marks (D) of the application tape (E) with the round body bulge (F), then press the side sill protection tape into place.

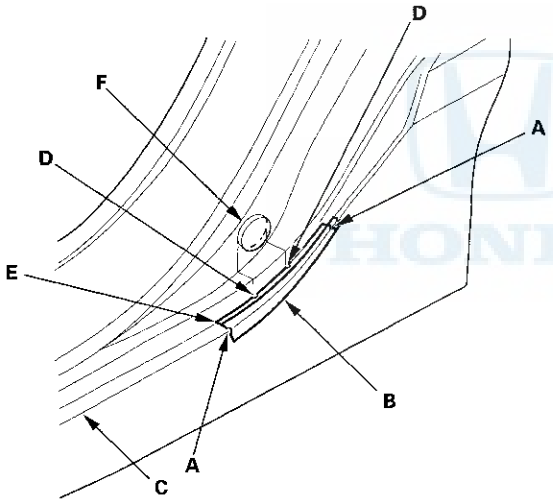

Rear License Trim Replacement

1. Remove the trunk lid trim (see page 20-69).
2. Remove the bolt securing the trunk lid lock cylinder (see step 3 on page 20-161).
3. Detach the clips by pushing them through the holes in the trunk lid (A) from the inside, then remove the rear license trim (B). Take care not to scratch the trunk lid.

Fastener Locations

▷ : **Clip, 5**

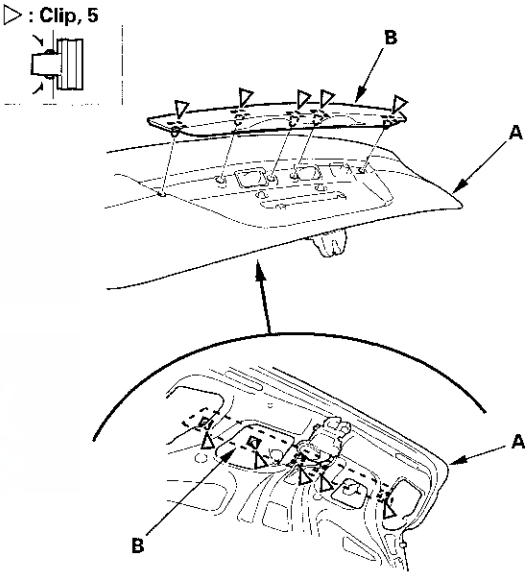

4. Install the trim in the reverse order of removal, and if the clips are damaged or stress-whitened, replace them with new ones.

Trunk Lid Spoiler Replacement

NOTE:
- Put on gloves to protect your hands.
- Take care not to scratch the trunk lid.

1. Remove the trunk lid trim (see page 20-69).

2. Remove the nuts from inside the trunk lid.

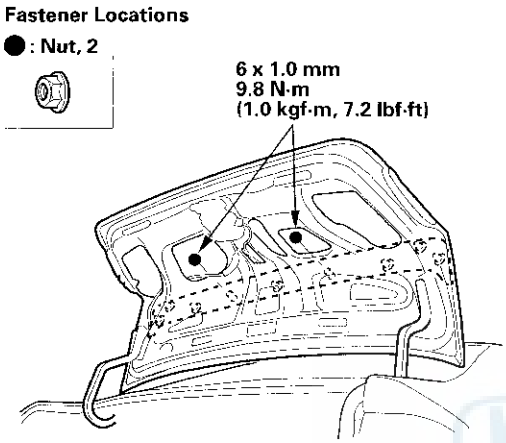

3. Detach the clips (A, B) by pushing them through the holes in the trunk lid from the inside. Carefully insert a trim tool next to the side clips (C), and detach the clips by prying on the spoiler (D). Take care not to scratch the trunk lid.

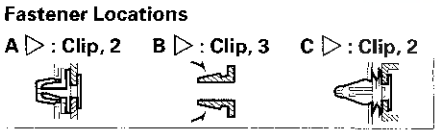

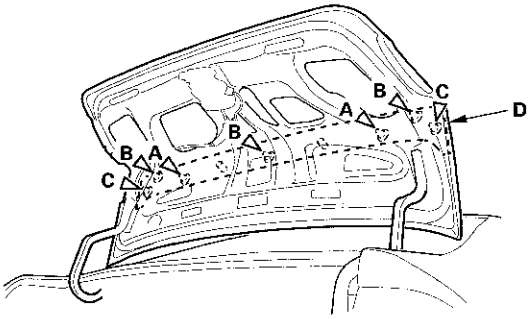

4. Close the trunk lid. Pull the trunk lid spoiler (A) up to release the clips from the trunk lid, then remove the spoiler.

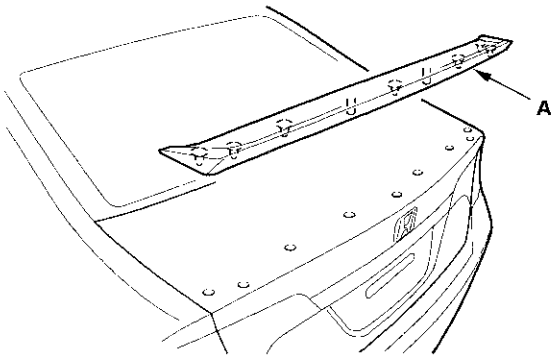

5. Install the spoiler in the reverse order of removal, and note these items:

   - If the clips are damaged or stress-whitened, replace them with new ones.
   - Push the clips into place securely.

Emblem/Sticker Replacement

NOTE: When removing the emblems/sticker, take care not to scratch the body.

1. To remove the front "H" emblem, remove the front grille; '06-08 models (see page 20-137), '09 model (see page 20-137).
2. Clean the body surface with a shop towel dampened in isopropyl alcohol. After cleaning, keep oil, grease, and water from getting on the surface.
3. Apply the emblem/sticker where shown. When installing the PZEV sticker on the inside surface of the left rear door quarter glass, align the sticker with the edge of the glass mark as shown, then press the sticker into place, and remove the application tape.
4. After installing the front "H" emblem, reinstall the front grille; '06-08 models (see page 20-137), '09 model (see page 20-137).

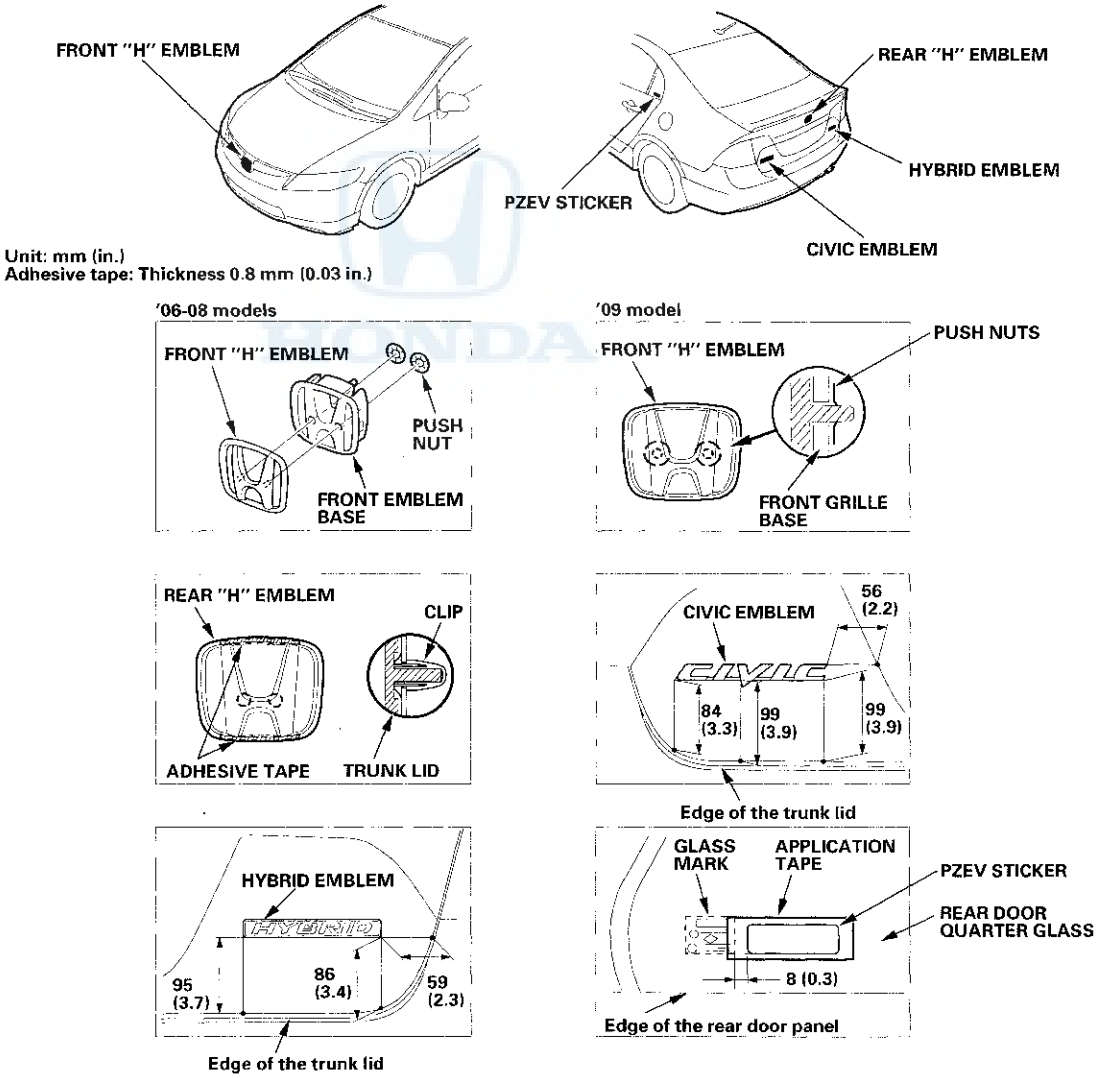

Front Inner Fender Replacement

NOTE: Take care not to scratch the body.

1. Remove the front inner fender (A).

   -1 On the back of the wheel arch, remove the screws (B), and remove the front splash guard (C) (Canada models).
   -2 From under the front bumper (D), remove the clips (E) securing the splash shield (F) and the front inner fender to the front bumper.
   -3 From the wheel arch, remove the clips (G, H, I) securing the front inner fender (and the splash shield) to the body.
   -4 Release the hook (J) of the splash shield, then remove the front inner fender.

   NOTE: To release the clips E and G, pry up on the center pin at the notch (K).

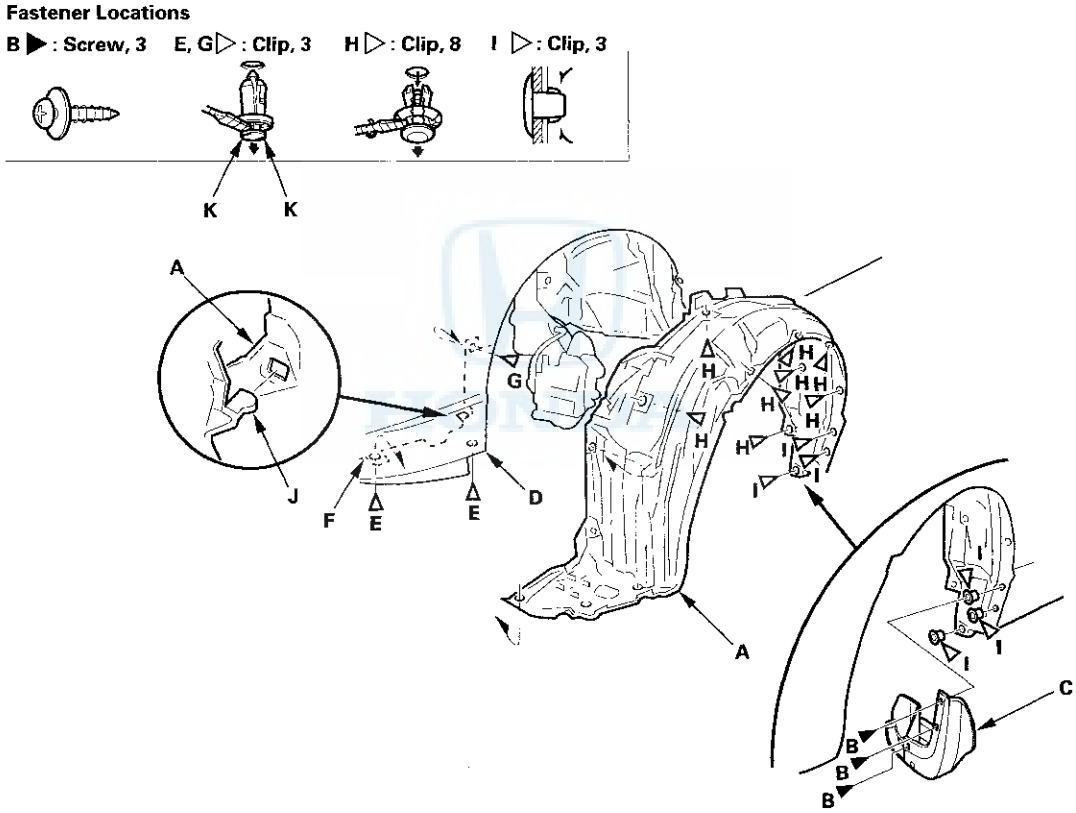

2. Install the inner fender in the reverse order of removal, and note these items:

   - If the clips are damaged or stress-whitened, replace them with new ones.
   - Push the clips and the hooks into place securely.

Splash Shield Replacement

NOTE: Take care not to scratch the body.

1. Remove the splash shield (A).

   -1 Remove the clips (B) that secure the front inner fender (C) and front splash shield to the body.
   -2 From under the front bumper (D), remove the clips (E, F).
   -3 From under the body, remove the clips (G).
   -4 Release the hooks (H) of the front splash shield, then pull the splash shield out.

   NOTE: To release the clips B, E, F, and G, pry up on the center pin at the notch (I).

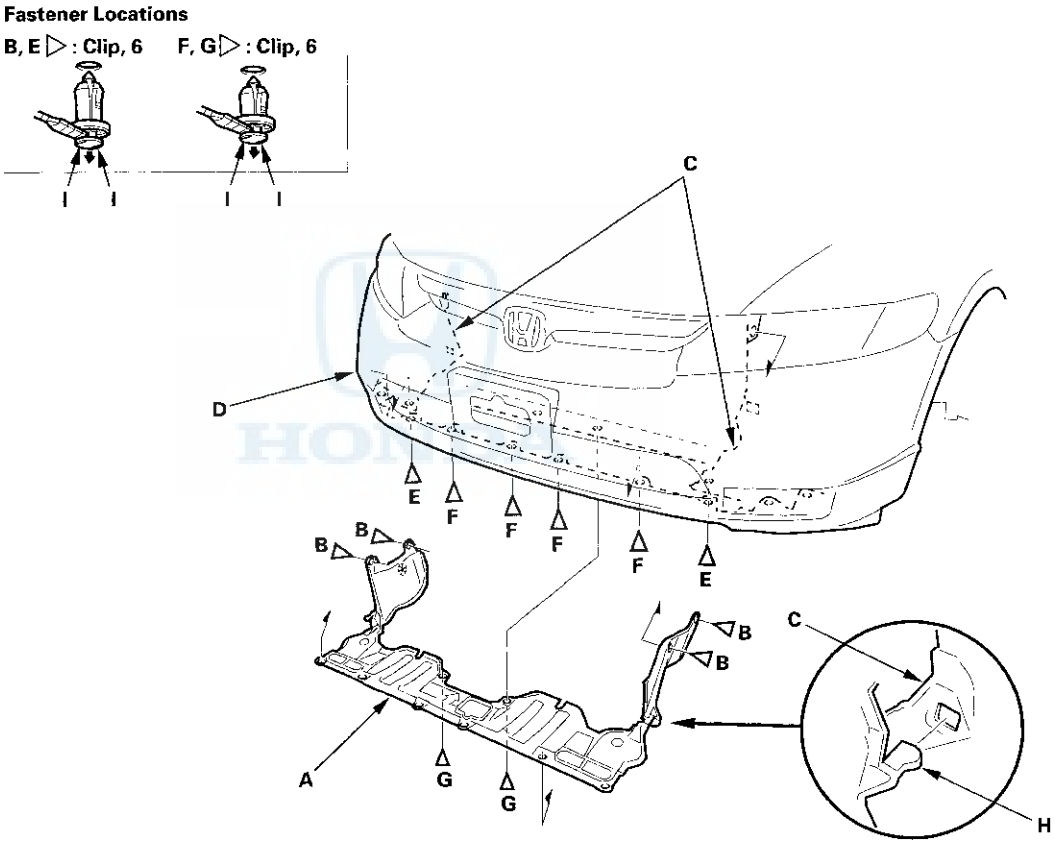

2. Install the splash shield in the reverse order of removal, and note these items:

   - If the clips are damaged or stress-whitened, replace them with new ones.
   - Push the clips and the hooks into place securely.

Front Fender Fairing Replacement

1. Remove the front inner fender as needed (see page 20-147).

2. From the wheel arch, remove the clips.

Fastener Locations

▷ : **Clip, 2**

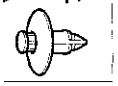

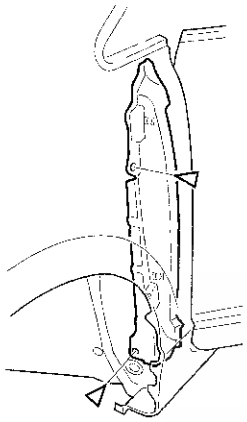

3. Open the front door. Detach the hooks (A) securing the front fender fairing (B).

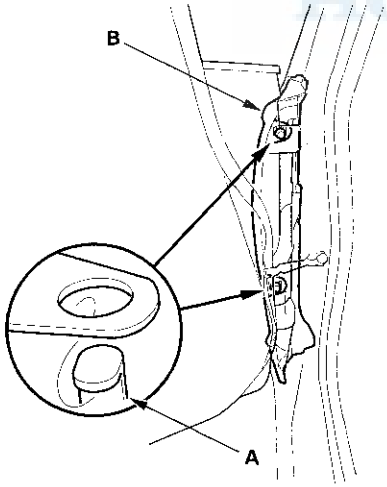

4. Remove the front fender fairing (A).

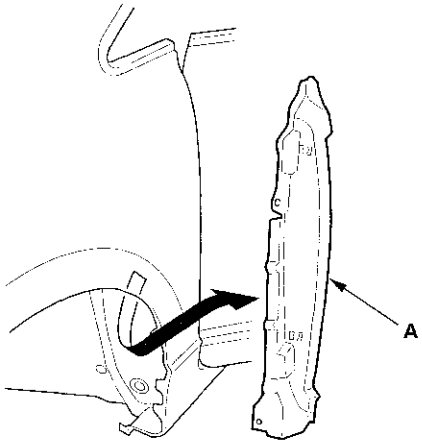

5. Install the fender fairing in the reverse order of removal, and note these items:

   - If the clips are damaged or stress-whitened, replace them with new ones.
   - Push the clips and the hooks into place securely.

Front Undercover Replacement

NOTE:
- Take care not to scratch the body.
- Put on gloves to protect your hands.
- Have an assistant help you when removing and installing the undercover.

1. Remove the bolts (A), and the clips (B, C), then remove the front undercover (D) from the splash shield (E), the right front floor undercover (F), and the left front floor undercover (G).

   NOTE: To release the clips B and C, pry up on the center pin at the notch (H).

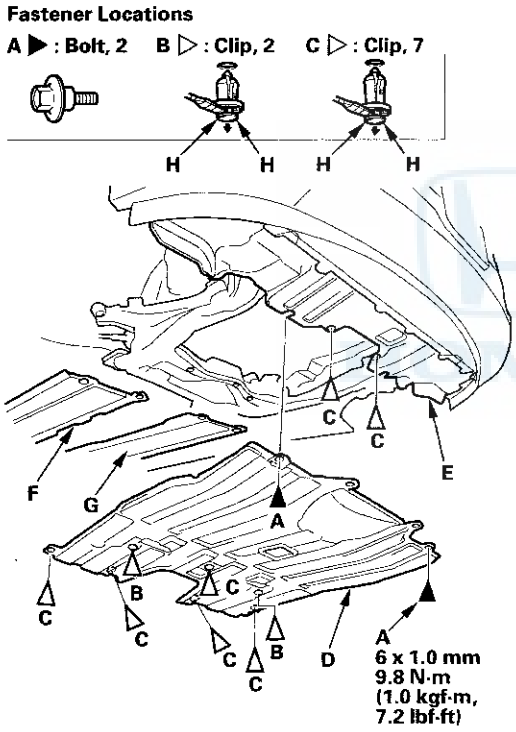

2. Install the undercover in the reverse order of removal, and note these items:

   - If the clips are damaged or stress-whitened, replace them with new ones.
   - Push the clips into place securely.

Front Floor Undercover Replacement

NOTE:
- Take care not to scratch the body.
- Put on gloves to protect your hands.
- Have an assistant help you when removing and installing the undercover.

1. Remove the bolts (A), and the clips (B, C), then remove the right front floor undercover (D), the left front floor undercover (E) from the front undercover (F), the right middle floor undercover (G), and the left middle floor undercover (H).

   NOTE: To release the clips B and C, pry up on the center pin at the notch (I).

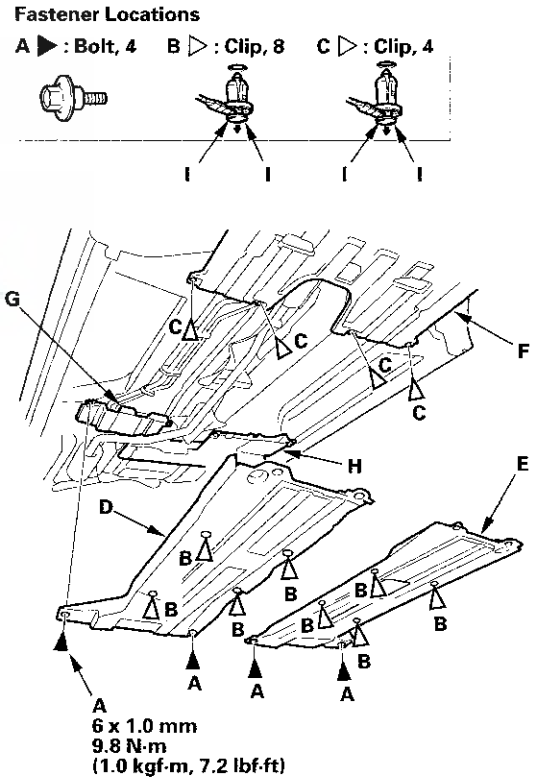

2. Install the undercovers in the reverse order of removal, and note these items:

   - If the clips are damaged or stress-whitened, replace them with new ones.
   - Push the clips into place securely.

Middle Floor Undercover Replacement

NOTE: Take care not to scratch the body.

1. Remove the bolts, and detach the clips, then remove the left middle floor undercover (A) and the right middle undercover (B), from the right front floor undercover (C), the left front floor undercover (D), and the body.

   NOTE: To release the clips, pry up on the center pin at the notch (E).

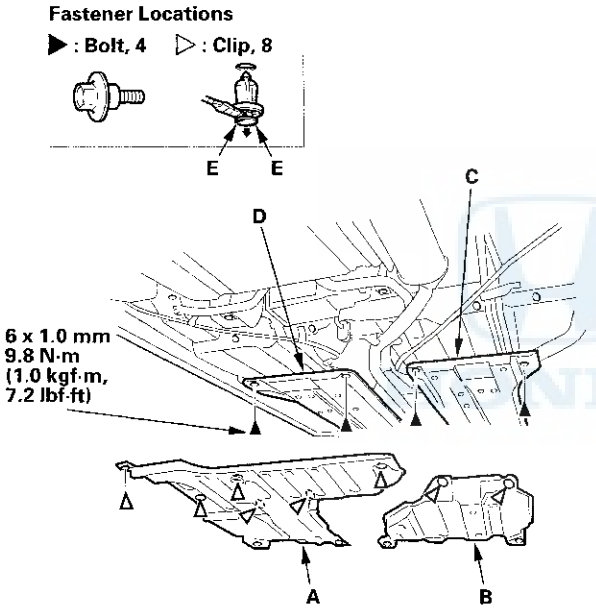

2. Install the undercovers in the reverse order of removal, and note these items:

   - If the clips are damaged or stress-whitened, replace them with new ones.
   - Push the clips into place securely.

Rear Floor Undercover Replacement

1. Remove the clips and bolts, then remove the rear floor undercover (A). Take care not to scratch the rear bumper (B).

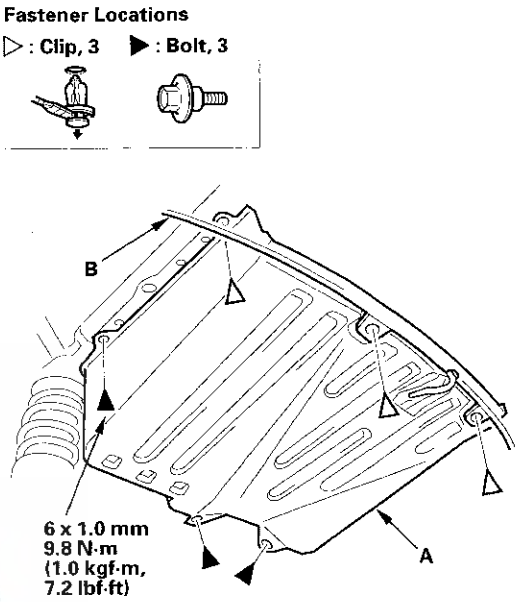

2. Install the undercover in the reverse order of removal, and note these items:

   - If the clips are damaged or stress-whitened, replace them with new ones.
   - Push the clips into place securely.

Fuel Pipe Protector Replacement

NOTE:
- Take care not to scratch the body.
- Put on gloves to protect your hands.

1. Remove the left rear wheel (see page 18-33).

2. Remove the clips, then remove the fuel pipe protector (A).

Fastener Locations
▷ : **Clip, 3**

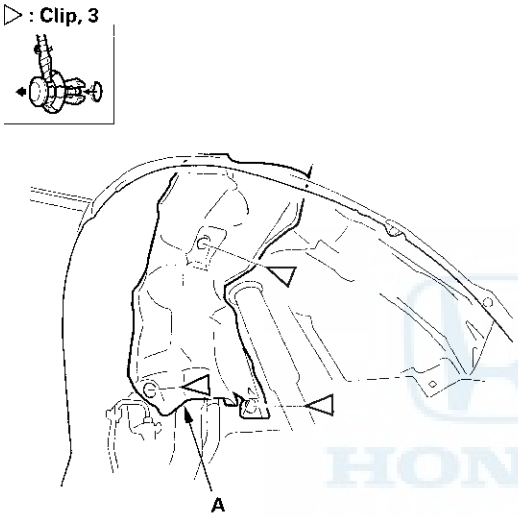

3. Install the protector in the reverse order of removal, and note these items:

   - If the clips are damaged or stress-whitened, replace them with new ones.
   - Push the clips into place securely.

Rear Fender Cover Replacement

NOTE: Take care not to scratch the rear bumper or the body.

1. Remove the screws, then remove the rear fender cover (A) from the rear bumper (B) and body.

Fastener Locations
▶ : **Screw, 3**

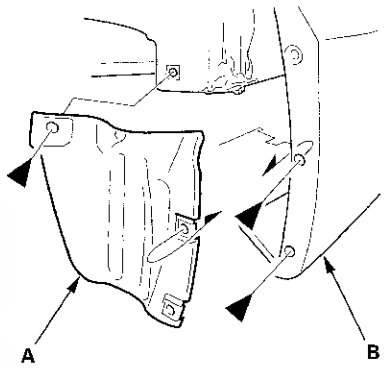

2. Install the fender cover in the reverse order of removal.

Rear Strake Replacement

NOTE: Take care not to scratch the body.

1. Remove the bolts, then remove the rear strake (A) from the body.

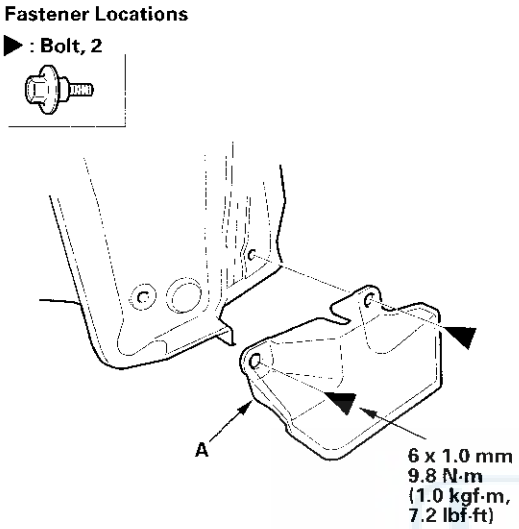

2. Install the strake in the reverse order of removal.

Rear Air Outlet Replacement

1. Remove the rear bumper (see page 20-127).

2. Detach the hooks (A), then remove the rear air outlet (B). Take care not to scratch the body.

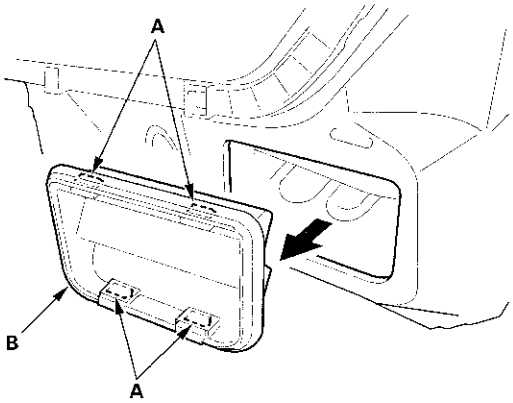

3. Install the air outlet by pushing on the hook portions until the hooks snap into place.

Component Location Index

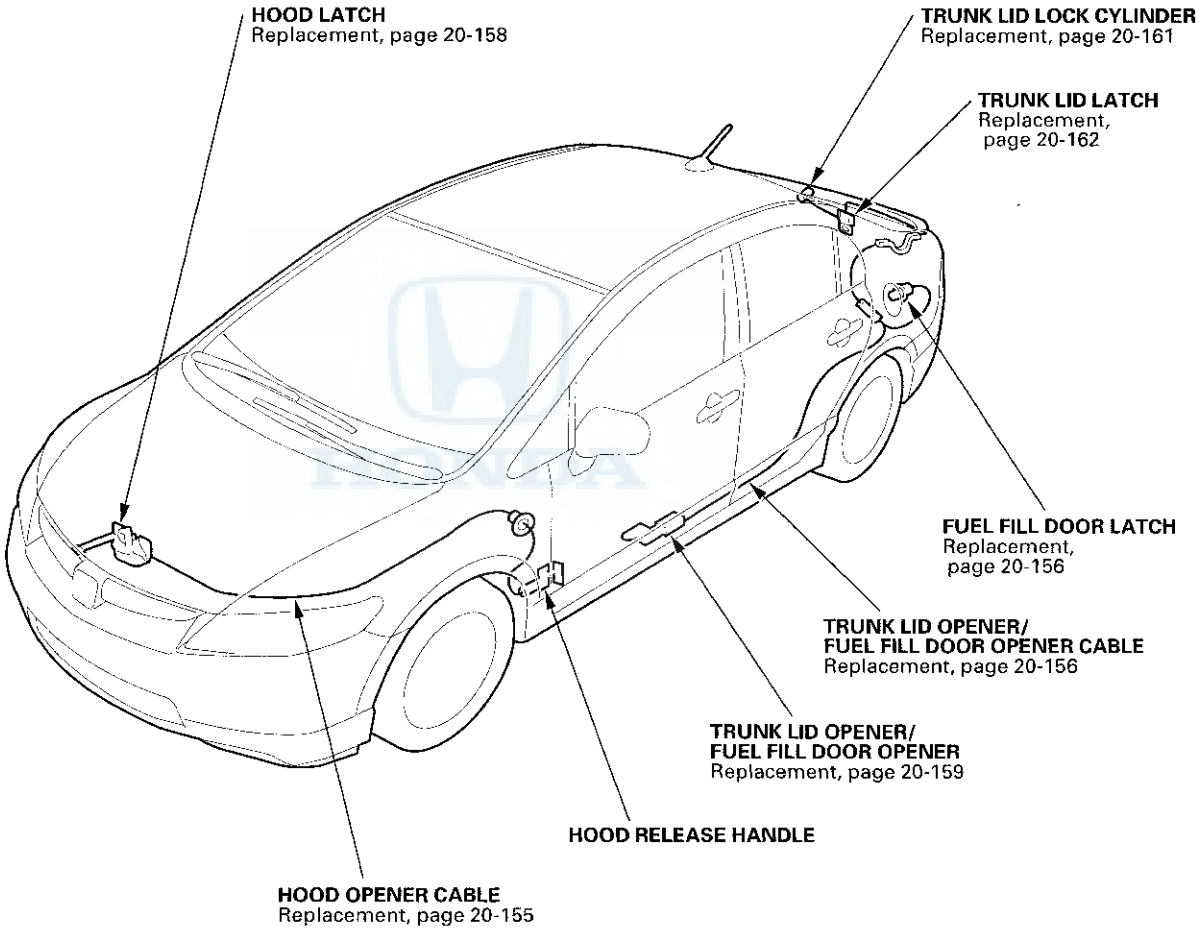

Hood Opener Cable Replacement

NOTE:
- Put on gloves to protect your hands.
- Take care not to scratch the body and related parts.

1. Remove these items:

   - Front grille cover (see page 20-139)
   - Front inner fender (see page 20-147)
   - Kick panel (see page 20-54)

2. Disconnect the hood opener cable (A) from the hood latch (B) (see page 20-158), and remove the bolts (C), then remove the hood release handle (D). Take care not to kink the cable.

Fastener Locations

C ▶ : Bolt, 2 E ▷ : Clip, 4 F ▷ : Clip, 1

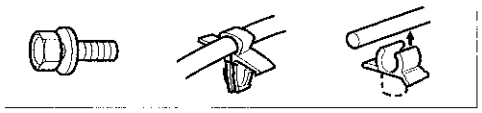

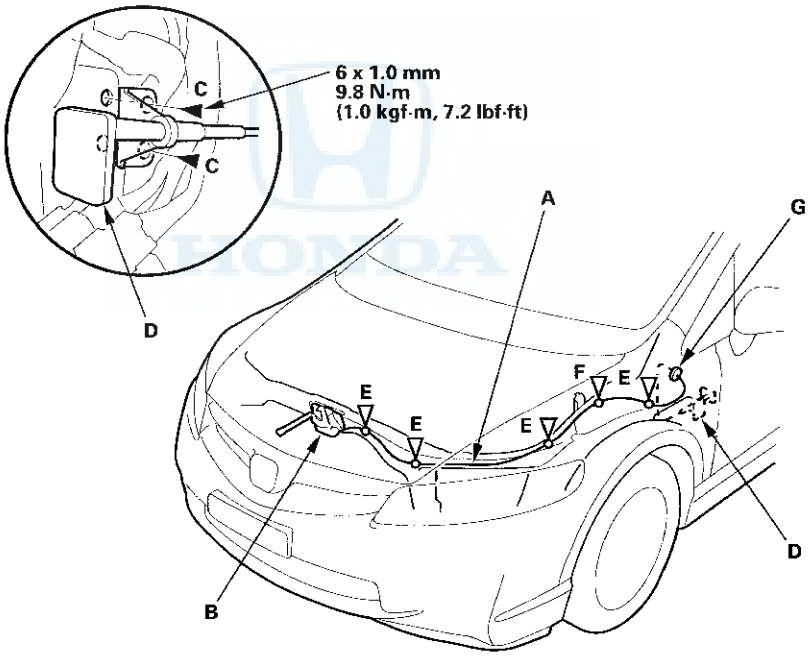

3. Detach the clips (E) with a clip remover, then release the hood opener cable from the clip (F). Remove the grommet (G) from the body, then remove the hood opener cable from the vehicle. Take care not to kink the cable.

4. Install the cable in the reverse order of removal, and if the clips are damaged or stress-whitened, replace them with new ones.

Trunk Lid Opener Cable/Fuel Fill Door Opener Cable Replacement

SRS components are located in this area. Review the SRS component locations (see page 24-11) and the precautions and procedures (see page 24-13) before doing repairs or service.

NOTE:
- Put on gloves to protect your hands.
- Take care not to scratch the body and related parts.

1. Remove these items:
   - Rear seat cushion (see page 20-118)
   - Front door sill trim, driver's side (see page 20-54)
   - Kick panels, driver's side (see page 20-54)
   - Rear door sill trim, both sides (see page 20-55)
   - B-pillar lower trim, driver's side (see page 20-60)
   - Trunk side trim panel, left side (see step 5 on page 20-68)
   - Trunk lid trim (see page 20-69)
   - Trunk lid opener/fuel fill door opener (see page 20-159)
   - Fuel cap adapter (see page 20-136)
2. Pull the carpet back as needed.
3. Release the opener cable (A) from the clips (B). Remove the cushion tape (C).

Fastener Locations

B ▷ : Clip, 2 C ▷ : Cushion tape, 2

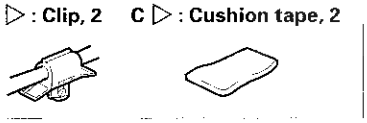

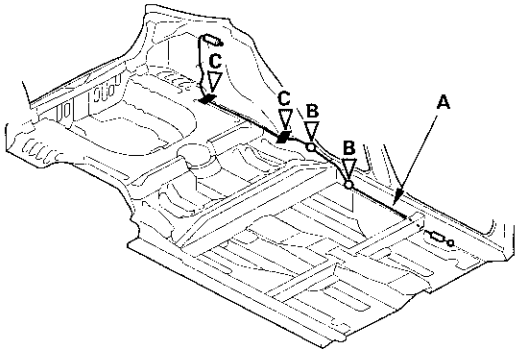

4. While pinching the hooks (A) from inside the vehicle, remove the grommet (B) from the body.

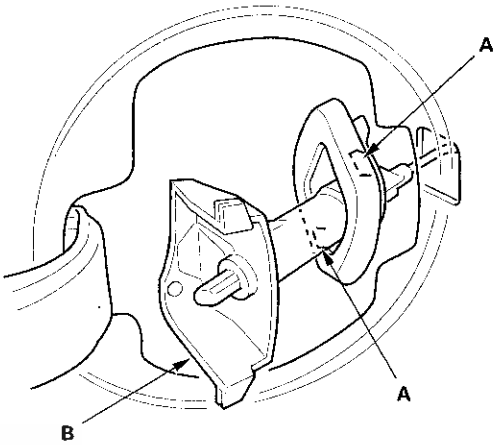

5. Release the hook (A), then remove the grommet (B) from the fuel fill door latch (C).

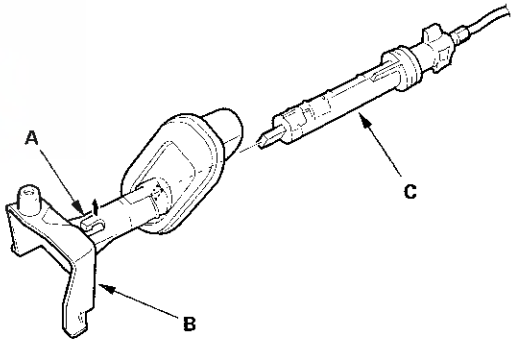

6. Remove the fuel fill door opener cable from inside the body.

7. Detach the opener cable junction box (A) from the body.

Fastener Locations

▷ : **Clip, 4**

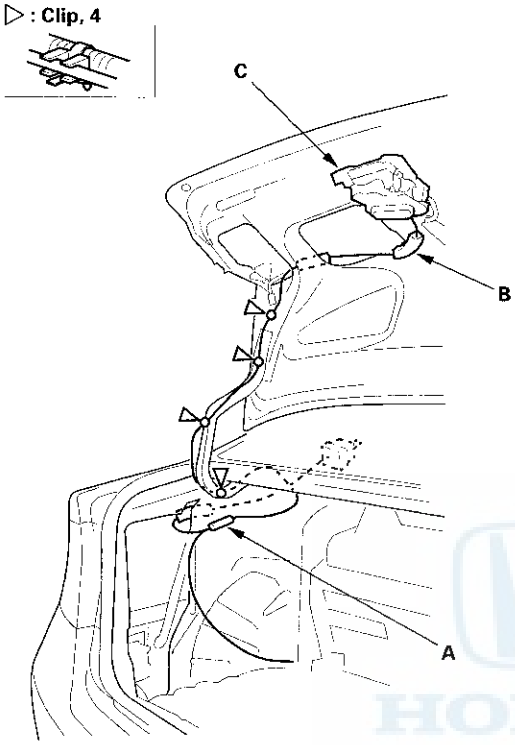

8. Disconnect the trunk lid opener cable (B) from the trunk lid latch (C) (see page 20-162).

9. Release the trunk lid opener/fuel fill door opener cable from the clips.

10. Remove the trunk lid opener/fuel fill door opener cable from the vehicle. Take care not to kink the cable.

11. Install the opener cable in the reverse order of removal, and note these items:

    - Align the marks (A) on the opener cable (B) with the cable clips (C) as shown.
    - Replace any damaged clips, and replace the cushion tape.

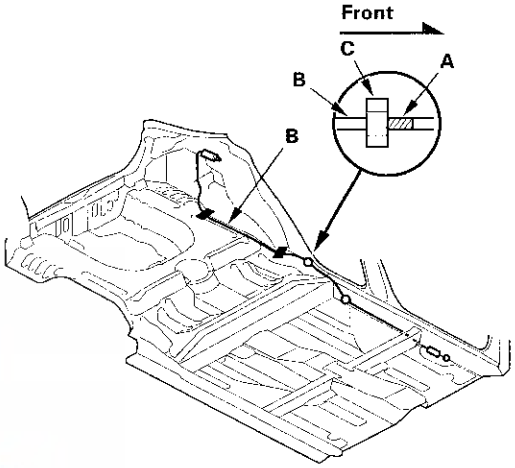

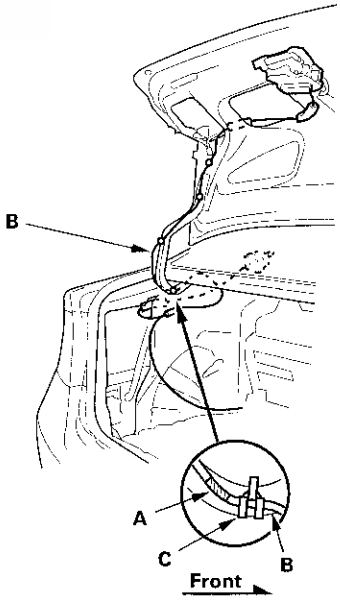

Hood Latch Replacement

1. Remove the front grille cover (see page 20-139).

2. Remove the clip (A), then disconnect and detach the hood latch switch connector (B).

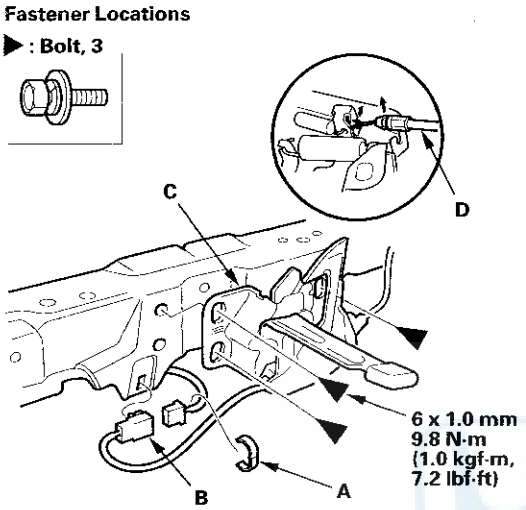

3. Remove the bolts, then remove the hood latch (C) from the body, and disconnect the hood opener cable (D) from the hood latch.

4. Install the latch in the reverse order of removal, and note these items:

   - Apply multipurpose grease to each location of the hood latch indicated by the arrows.
   - Make sure the hood opener cable is connected properly and the hood latch switch connector is plugged in properly.
   - Adjust the hood latch alignment (see step 4 on page 20-129).
   - Make sure the hood opens properly and locks securely.

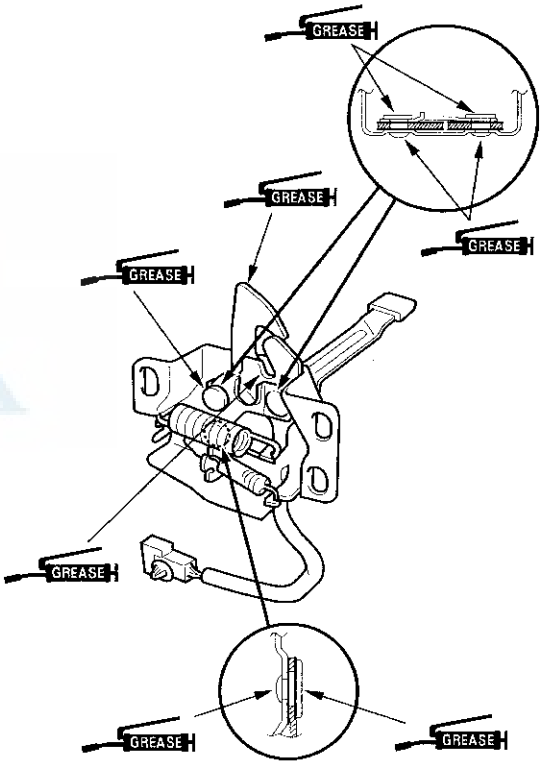

Trunk Lid Opener/Fuel Fill Door Opener Replacement

Special Tools Required
KTC trim tool set SOJATP2014 *
* Available through the Honda Tool and Equipment Program; call 888-424-6857

NOTE: Use the appropriate tool from the KTC trim tool set to avoid damage when removing components.

1. Pry out the bottom edge of the front side cap (A) at the notch with the trim tool to detach the hooks (B), and release the hooks (C), then remove the cap from the front door sill trim (D).

Fastener Location
▶ : **Bolt, 1**

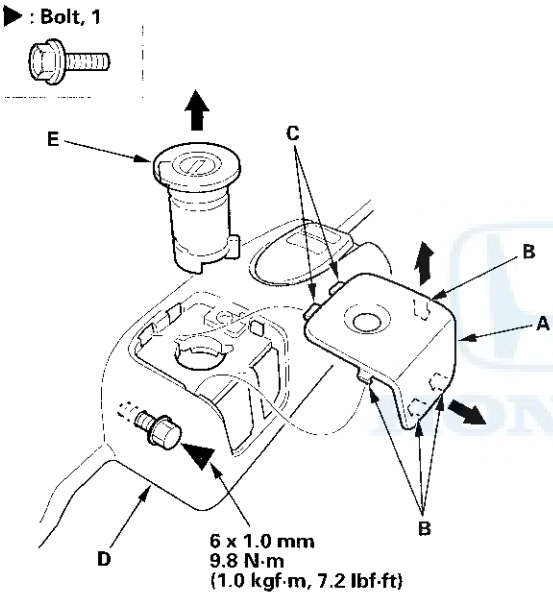

2. Remove the opener lock cylinder (E), and loose the bolt.

3. Remove the screw securing the front door sill trim (A) and the trunk lid opener/fuel fill door opener.

Fastener Location
▶ : **Screw, 1**

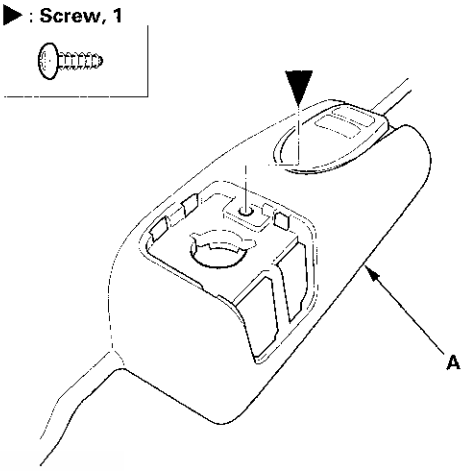

4. Remove the front door sill trim (see step 3 on page 20-54).

(cont'd)

Trunk Lid Opener/Fuel Fill Door Opener Replacement (cont'd)

5. Remove the bolt, then remove the trunk lid opener/fuel fill door opener (A) from the bolt (B).

Fastener Location

▶ : Bolt, 1

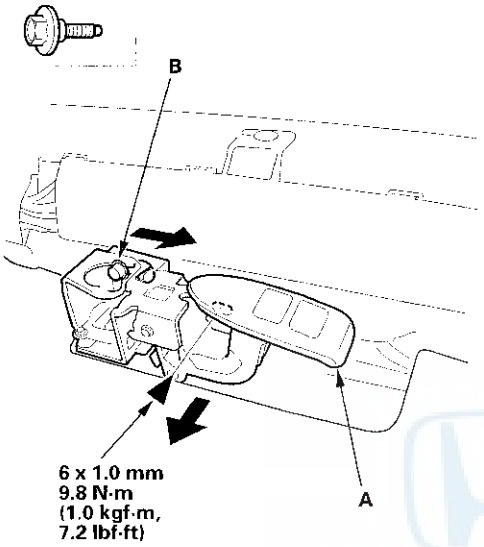

6. Disconnect the trunk lid opener/fuel fill door opener cable (A), then remove the opener (B). Take care not to kink the cable.

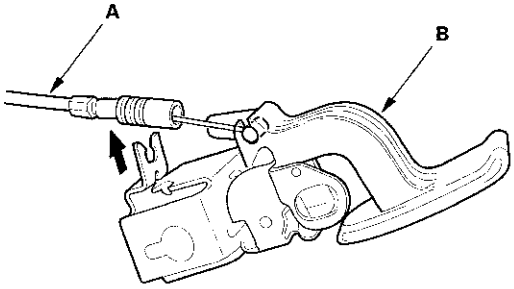

7. Install the opener in the reverse order of removal, and note these items:

- Make sure the opener cable is connected properly.
- Make sure the trunk lid and the fuel fill door open properly and lock securely.
- If the trunk lid or the fuel fill door does not open properly, adjust the position of the cable end on the opener.

Trunk Lid Lock Cylinder Replacement

1. Remove the trunk lid trim (see page 20-69).

2. Disconnect the cylinder rod (A), and if equipped, disconnect the cylinder switch connector (B).

   NOTE: If the rod fastener (C) is damaged or stress-whitened, replace it with a new one.

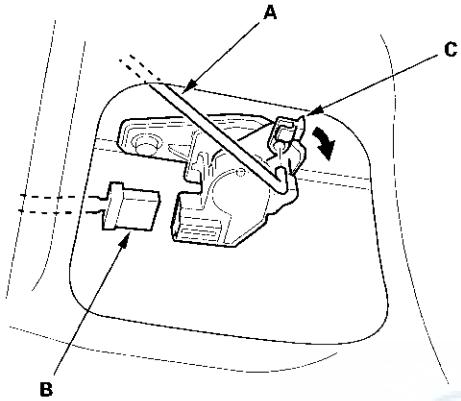

3. Remove the bolt securing the lock cylinder (A).

Fastener Location

▶ : Bolt, 1

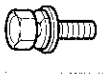

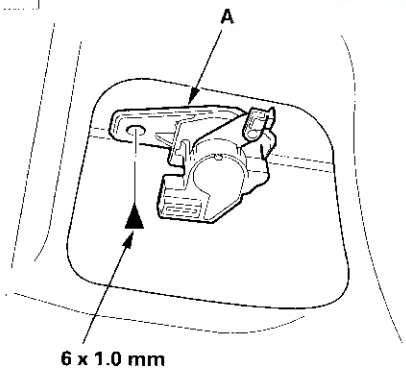

4. Remove the rear license trim (see page 20-144).

5. Remove the bolt securing the lock cylinder (A).

Fastener Location

▶ : Bolt, 1

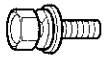

6 x 1.0 mm
9.8 N·m
(1.0 kgf·m, 7.2 lbf·ft)

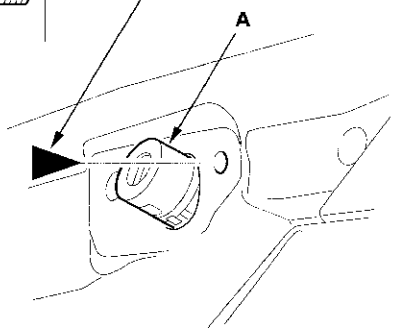

6. Turn the lock cylinder (A) to release the hook (B) from the trunk lid (C), then remove the lock cylinder.

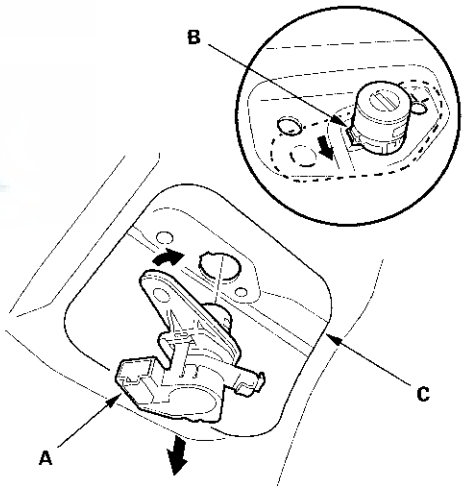

7. Install the lock cylinder in the reverse order of removal, and note these items:

   - Replace the rod fastener if it is damaged.
   - Make sure the cylinder switch connector is plugged in properly (if equipped), and the cylinder rod is connected properly.
   - Make sure the trunk lid opens properly and locks securely.

Trunk Lid Latch Replacement

1. Remove the trunk lid trim (see page 20-69).

2. Disconnect the cylinder rod from the lock cylinder (see step 2 on page 20-161).

3. Disconnect the trunk lid opener cable (A), and disconnect the trunk lid latch switch connector (B). Take care not to bend the opener cable.

Power trunk lid latch

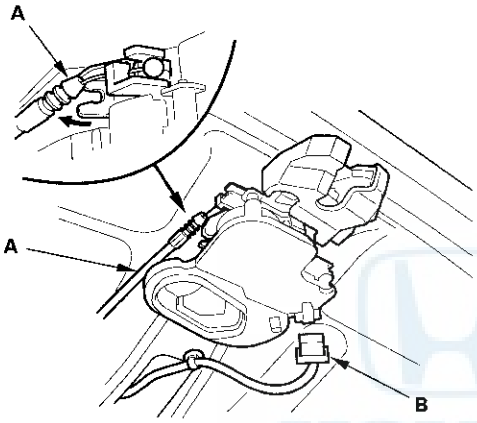

Manual trunk lid latch with security switch

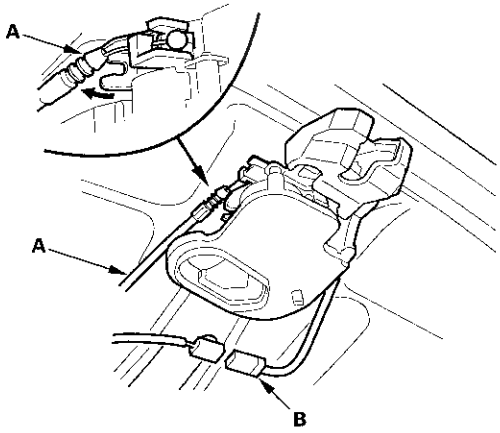

4. Remove the bolts from the trunk lid latch (A).

Fastener Locations

▶ : Bolt, 2

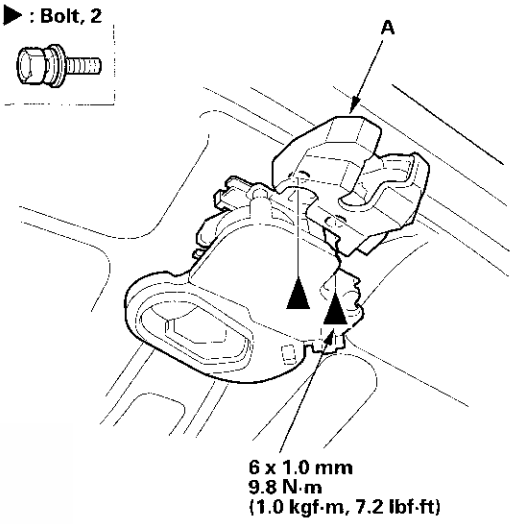

5. Pull the trunk lid latch (A) out, and disconnect the cylinder rod (B) from the trunk lid latch. Take care not to bend the cylinder rod.

NOTE: If the rod fastener (C) is damaged or stress-whitened, replace it with a new one.

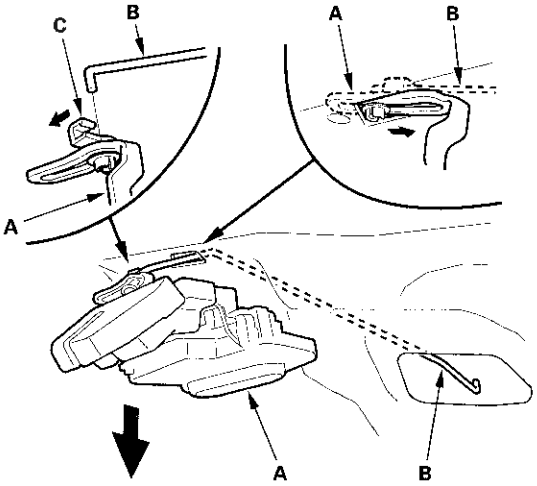

6. Install the latch in the reverse order of removal, and note these items:

   - Replace the rod fastener if it is damaged.
   - Make sure the connector is plugged in properly and the opener cable is connected properly.
   - Make sure the trunk lid opens properly and locks securely.
   - If the trunk latch does not operate properly, adjust the position of the cable end (A) on the latch.

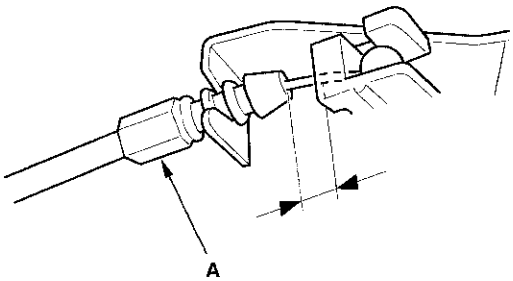

Upper Dashboard Support Gusset Replacement

Upper Dashboard Support Gusset Torque

NOTE: Take care not to scratch the body.

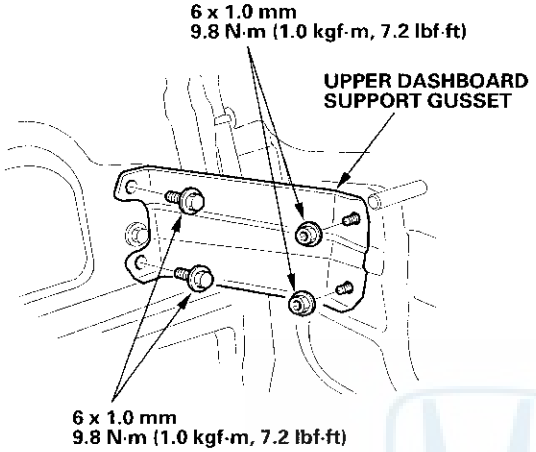

Rear Floor Upper Cross-member Gusset Replacement

Rear Floor Upper Cross-member Gusset Torque

NOTE: Take care not to scratch the body.

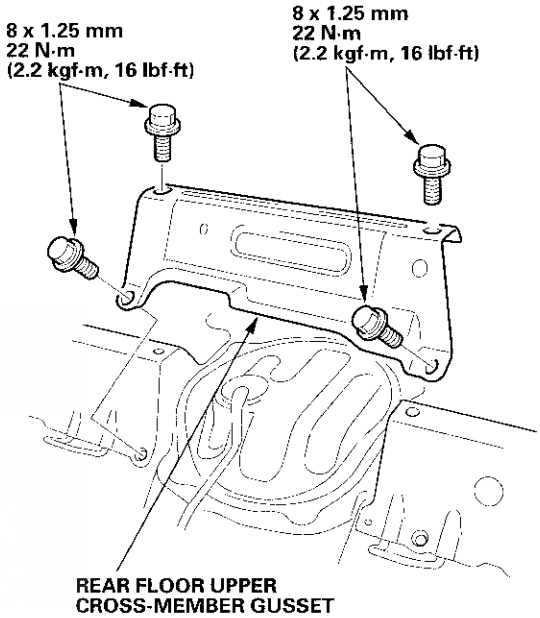

Rear Floor Brace Replacement

Rear Floor Brace Torque

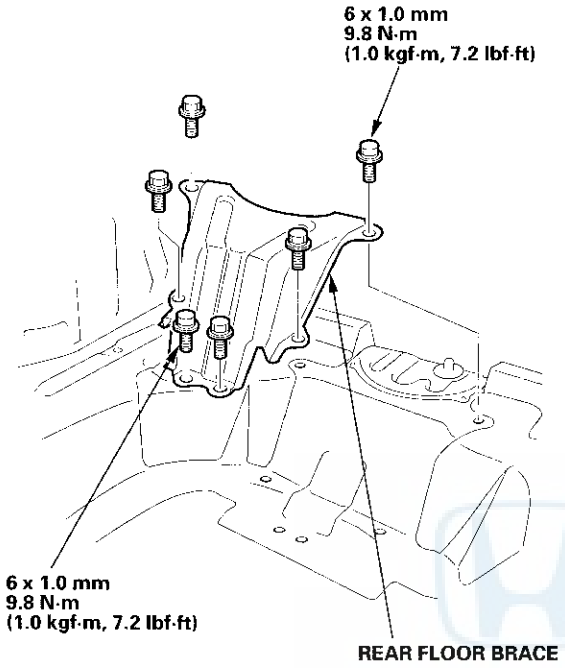

Subframe Replacement

Front Subframe Torque

NOTE:
- After loosening the subframe mounting bolts, be sure to replace them with new ones.
- When installing, align both installation reference holes in the subframe with both reference holes in the body using a screwdriver or tapered punch as a guide.

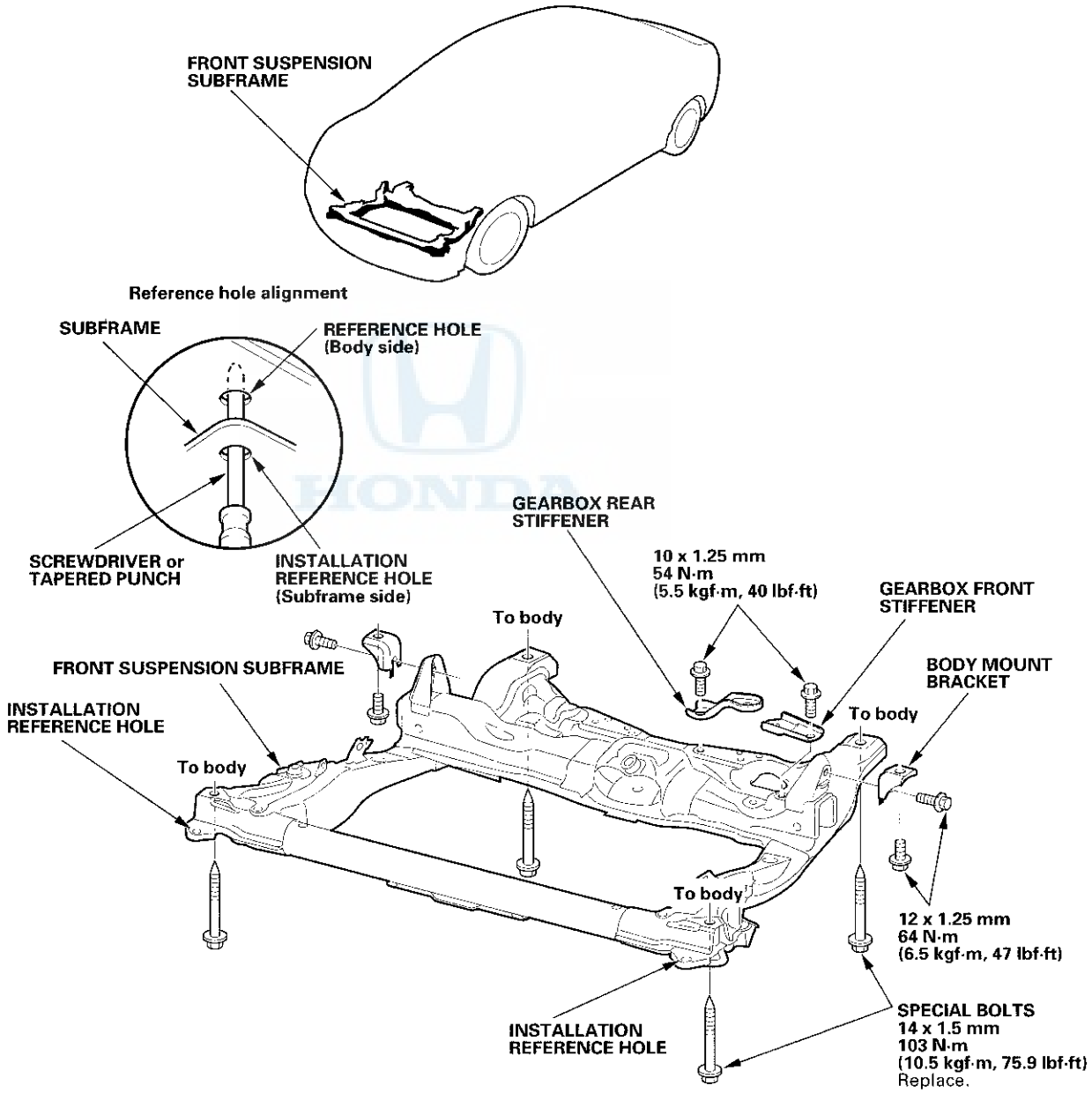

HONDA

Frame Repair Chart

Top View

Unit: mm (in.)
ø: Inner diameter

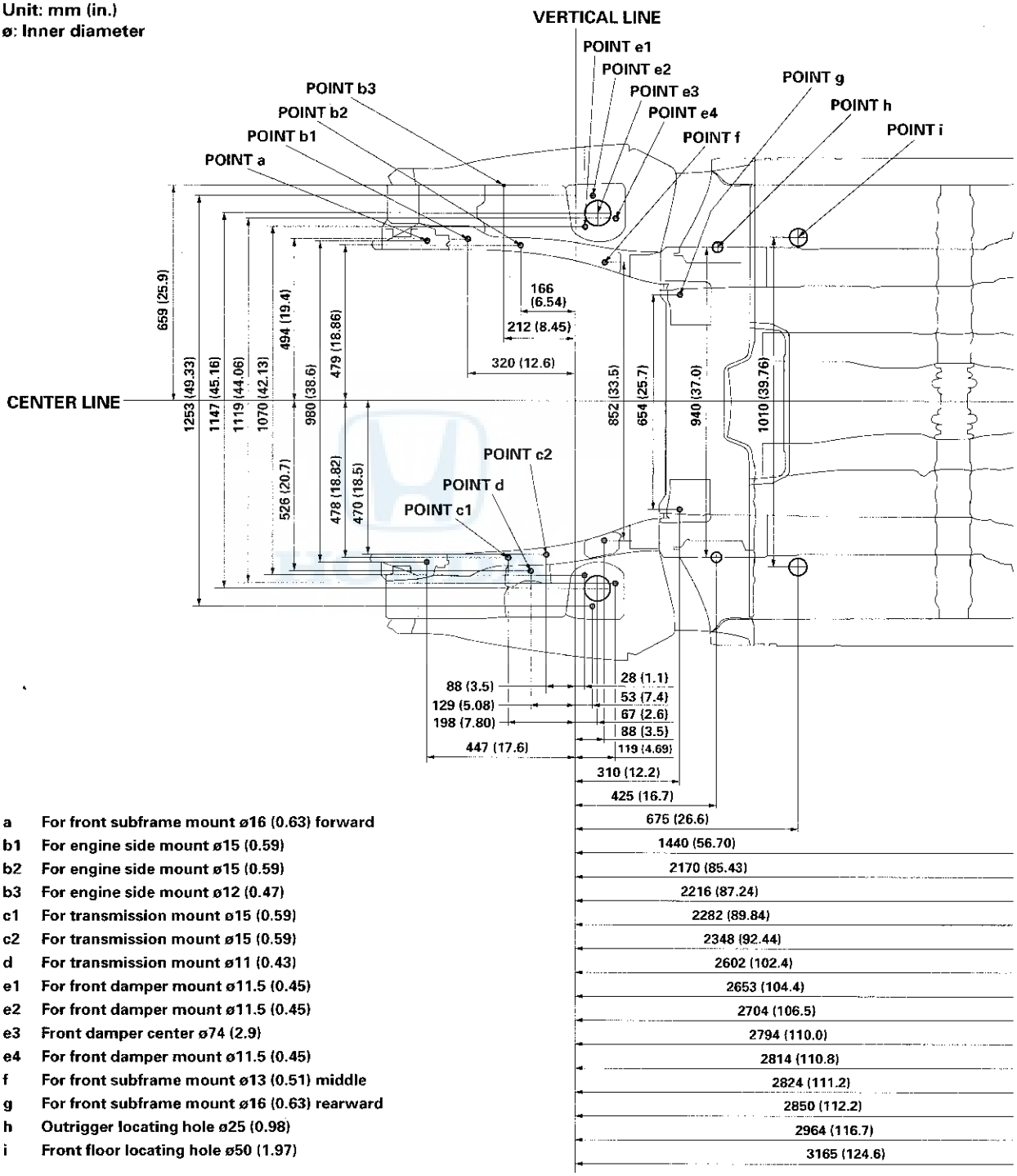

a	For front subframe mount ø16 (0.63) forward
b1	For engine side mount ø15 (0.59)
b2	For engine side mount ø15 (0.59)
b3	For engine side mount ø12 (0.47)
c1	For transmission mount ø15 (0.59)
c2	For transmission mount ø15 (0.59)
d	For transmission mount ø11 (0.43)
e1	For front damper mount ø11.5 (0.45)
e2	For front damper mount ø11.5 (0.45)
e3	Front damper center ø74 (2.9)
e4	For front damper mount ø11.5 (0.45)
f	For front subframe mount ø13 (0.51) middle
g	For front subframe mount ø16 (0.63) rearward
h	Outrigger locating hole ø25 (0.98)
i	Front floor locating hole ø50 (1.97)

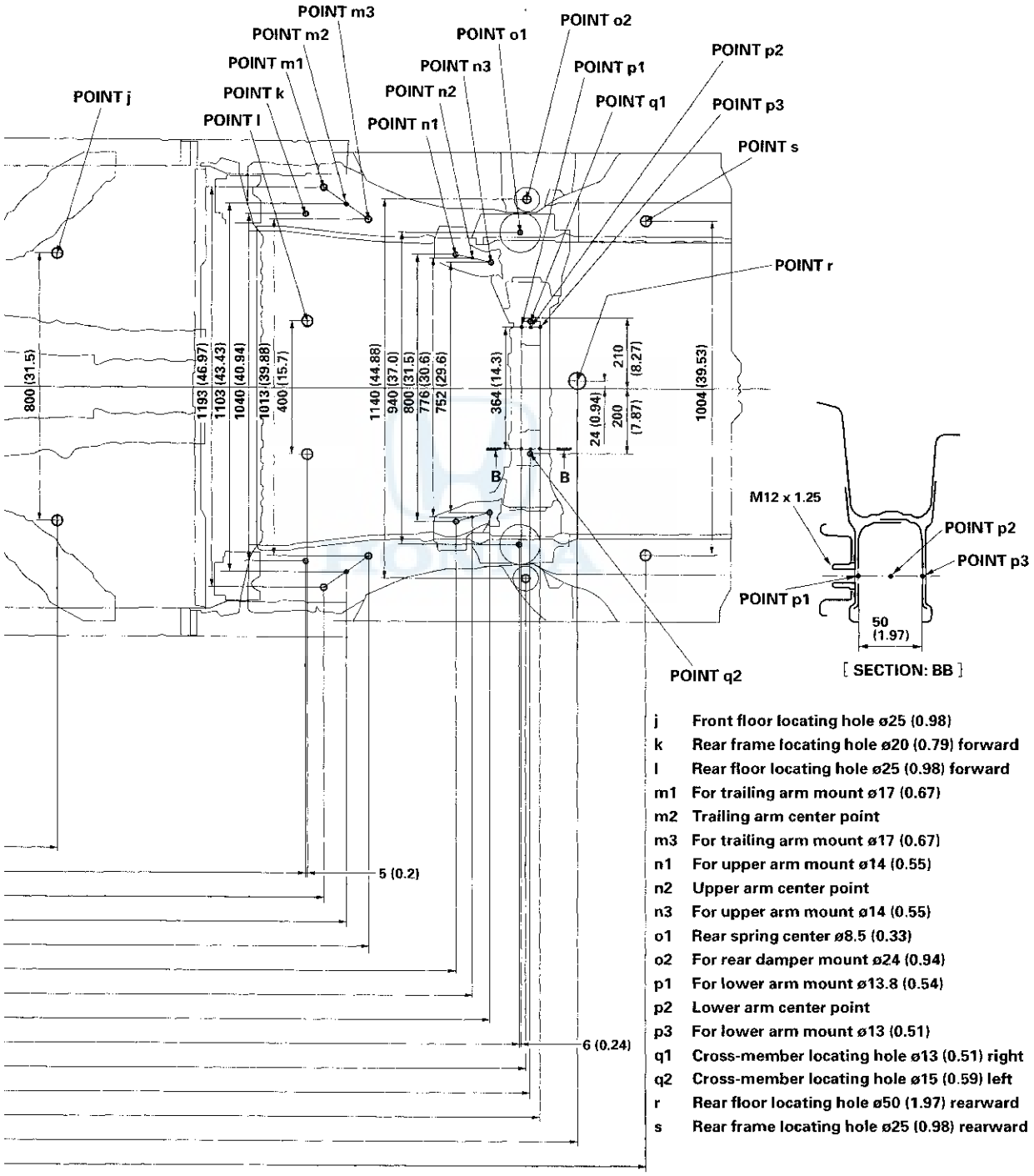

j	Front floor locating hole ø25 (0.98)
k	Rear frame locating hole ø20 (0.79) forward
l	Rear floor locating hole ø25 (0.98) forward
m1	For trailing arm mount ø17 (0.67)
m2	Trailing arm center point
m3	For trailing arm mount ø17 (0.67)
n1	For upper arm mount ø14 (0.55)
n2	Upper arm center point
n3	For upper arm mount ø14 (0.55)
o1	Rear spring center ø8.5 (0.33)
o2	For rear damper mount ø24 (0.94)
p1	For lower arm mount ø13.8 (0.54)
p2	Lower arm center point
p3	For lower arm mount ø13 (0.51)
q1	Cross-member locating hole ø13 (0.51) right
q2	Cross-member locating hole ø15 (0.59) left
r	Rear floor locating hole ø50 (1.97) rearward
s	Rear frame locating hole ø25 (0.98) rearward

(cont'd)

Frame Repair Chart (cont'd)

Side View

Unit: mm (in.)
ø: Inner diameter

a	For front subframe mount ø16 (0.63) forward
b1	For engine side mount ø15 (0.59)
b2	For engine side mount ø15 (0.59)
b3	For engine side mount ø12 (0.47)
c1	For transmission mount ø15 (0.59)
c2	For transmission mount ø15 (0.59)
d	For transmission mount ø11 (0.43)
e1	For front damper mount ø11.5 (0.45)
e2	For front damper mount ø11.5 (0.45)
e3	Front damper center ø74 (2.9)
e4	For front damper mount ø11.5 (0.45)
f	For front subframe mount ø13 (0.51) middle
g	For front subframe mount ø16 (0.63) rearward
h	Outrigger locating hole ø25 (0.98)
i	Front floor locating hole ø50 (1.97)

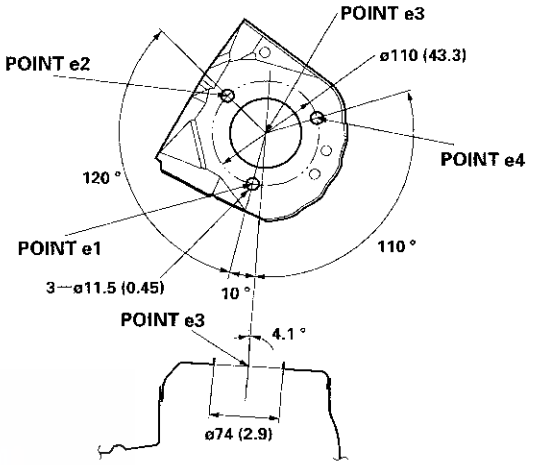

[SECTION: AA]

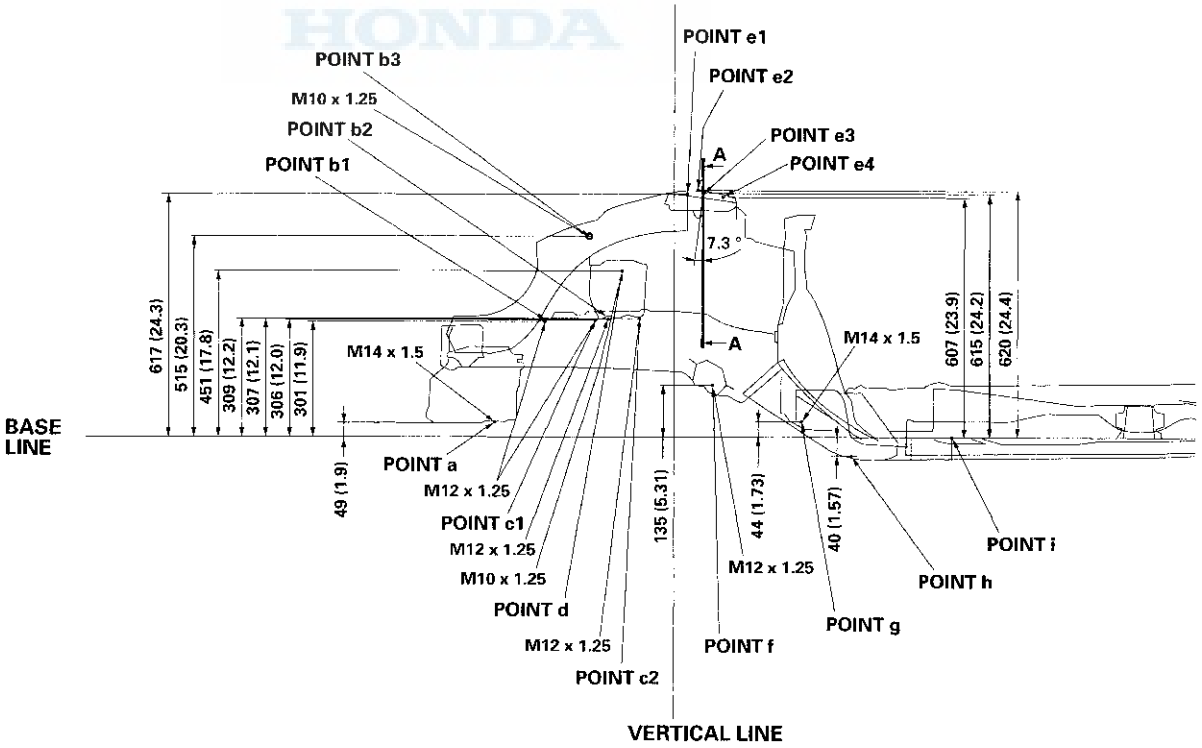

j	Front floor locating hole ø25 (0.98)
k	Rear frame locating hole ø20 (0.79) forward
l	Rear floor locating hole ø25 (0.98) forward
m1	For trailing arm mount ø17 (0.67)
m2	Trailing arm center point
m3	For trailing arm mount ø17 (0.67)
n1	For upper arm mount ø14 (0.55)
n2	Upper arm center point
n3	For upper arm mount ø14 (0.55)
o1	Rear spring center ø8.5 (0.33)
o2	For rear damper mount ø24 (0.94)
p1	For lower arm mount ø13.8 (0.54)
p2	Lower arm center point
p3	For lower arm mount ø13 (0.51)
q1	Cross-member locating hole ø13 (0.51) right
q2	Cross-member locating hole ø15 (0.59) left
r	Rear floor locating hole ø50 (1.97) rearward
s	Rear frame locating hole ø25 (0.98) rearward

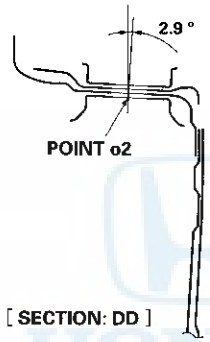

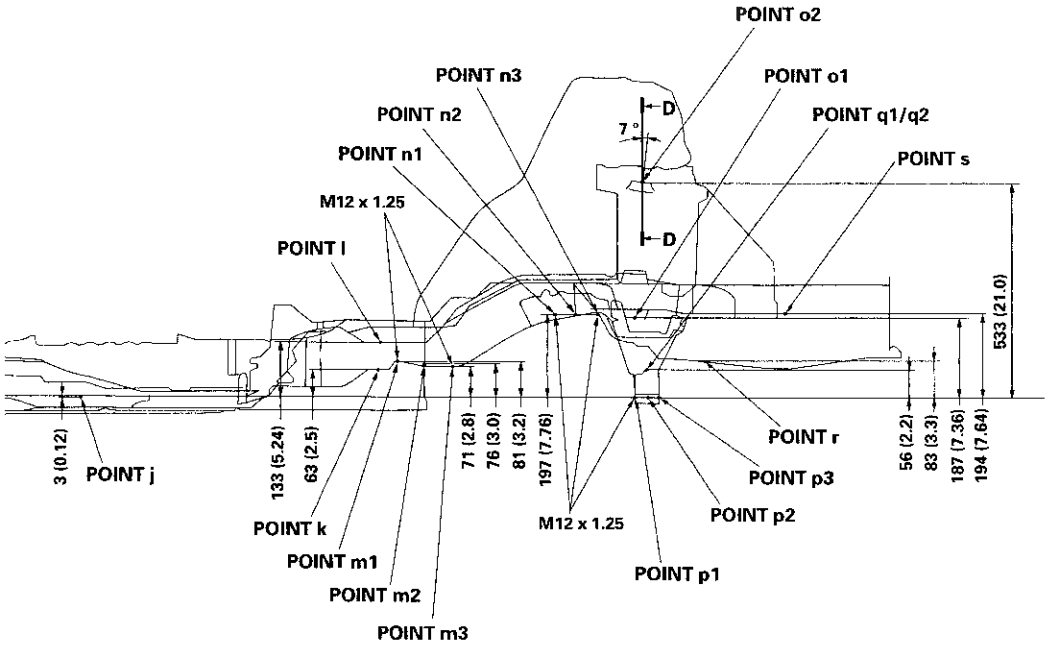

SUPPLEMENTAL RESTRAINT SYSTEM (SRS) (If HVAC maintenance is required)

The Civic Hybrid SRS includes a driver's airbag in the steering wheel hub, a passenger's airbag in the dashboard above the glove box, seat belt tensioners in the front seat belt retractors, seat belt buckle tensioners in the front seat belt buckles, side curtain airbags in the sides of the roof, and side airbags in the front seat-backs. Information necessary to safely service the SRS is included in this Service Manual. Items marked with an asterisk (*) on the contents page include or are located near SRS components. Servicing, disassembling, or replacing these items requires special precautions and tools, and should be done by an authorized Honda dealer.

- To avoid rendering the SRS inoperative, which could lead to personal injury or death in the event of a severe frontal or side collision, all SRS service work should be done by an authorized Honda dealer.
- Improper service procedures, including incorrect removal and installation of the SRS, could lead to personal injury caused by unintentional deployment of the airbags, side airbags, and/or side curtain airbags.
- Do not bump or impact the SRS unit, front impact sensors, side impact sensors, or rear safing sensor when the ignition switch is in ON (II), or for at least 3 minutes after the ignition switch is turned to LOCK (0); otherwise, the system may fail in a collision, or the airbags may deploy.
- SRS electrical connectors are identified by yellow color coding. Related components are located in the steering column, front console, dashboard, dashboard lower panel, in the dashboard above the glove box, in the front seats, in the roof side, and around the floor. Do not use electrical test equipment on these circuits.

INTEGRATED MOTOR ASSIST (IMA) SYSTEM (If HVAC maintenance is required)

IMA components are located in this area. The IMA is a high-voltage system. The high voltage cables and their covers are identified by orange coloring. The safety labels are attached to high voltage and other related parts (see page 1-7). You must be familiar with the IMA system before working around it. Make sure you have read the Service Precautions in the IMA section before performing repairs or service (see page 12-3).

HVAC (Heating, Ventilation, and Air Conditioning)

HVAC (Heating, Ventilation, and Air Conditioning)

Special Tools 21-2

Climate Control

Component Location Index 21-3
A/C Service Tips and Precautions 21-6
A/C System Inspection 21-6
A/C Refrigerant Oil Replacement 21-7
A/C Line Replacement 21-9
General Troubleshooting Information 21-10
DTC Troubleshooting Index 21-18
Symptom Troubleshooting Index 21-20
System Description 21-24
Circuit Diagram 21-34
DTC Troubleshooting 21-36
Climate Control Power and Ground Circuit Troubleshooting 21-75
Navigation Communication Line Circuit Troubleshooting 21-76
Radiator and A/C Condenser Fan Low Speed Circuit Troubleshooting 21-78
A/C Condenser Fan High Speed Circuit Troubleshooting 21-82
A/C Compressor Clutch Circuit Troubleshooting 21-84
A/C Signal Circuit Troubleshooting 21-86
A/C Compressor Driver Power Circuit Troubleshooting 21-88
Humidity/In-car Temperature Sensor Test 21-89
Humidity/In-car Temperature Sensor Replacement 21-90
Evaporator Temperature Sensor Test 21-90
Outside Air Temperature Sensor Test 21-91
Outside Air Temperature Sensor Replacement 21-91
Sunlight Sensor Test 21-92
Sunlight Sensor Replacement 21-92
Heater Core Temperature Sensor Test 21-93
Heater Core Temperature Sensor Replacement 21-93
Power Transistor Test 21-94
Air Mix Control Motor Test 21-95
Air Mix Control Motor Replacement 21-95
Mode Control Motor Test 21-96
Mode Control Motor Replacement 21-96
Recirculation Control Motor Test 21-97
Recirculation Control Motor Replacement 21-97
Climate Control Unit Removal/Installation 21-98
Climate Control Unit Bulb Replacement 21-98
Dust and Pollen Filter Replacement 21-99
Blower Unit Removal/Installation 21-99
Blower Unit Component Replacement 21-101
Evaporator Core Replacement 21-101
Expansion Valve Replacement 21-103
* Heater Unit/Core Replacement 21-104
Heater Valve Cable Adjustment 21-107
Auxiliary Electric Water Pump Replacement 21-108
A/C Compressor Driver Removal/Installation 21-109
A/C Compressor Replacement 21-110
A/C Compressor Clutch Check 21-113
A/C Compressor Clutch Overhaul 21-115
A/C Compressor Thermal Protector Replacement 21-117
A/C Compressor Relief Valve Replacement 21-117
A/C Condenser Replacement 21-118
Receiver/Dryer Desiccant Replacement 21-119
Refrigerant Recovery 21-120
System Evacuation 21-121
System Charging 21-122
Refrigerant Leak Check 21-123
A/C System Noise Check 21-127
A/C System Test 21-129

Special Tools

Ref. No.	Tool Number	Description	Qty
①	07SAZ-001000A	Backprobe Set	2

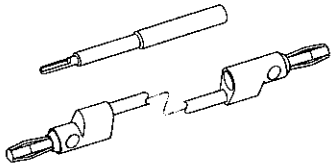

①

Component Location Index

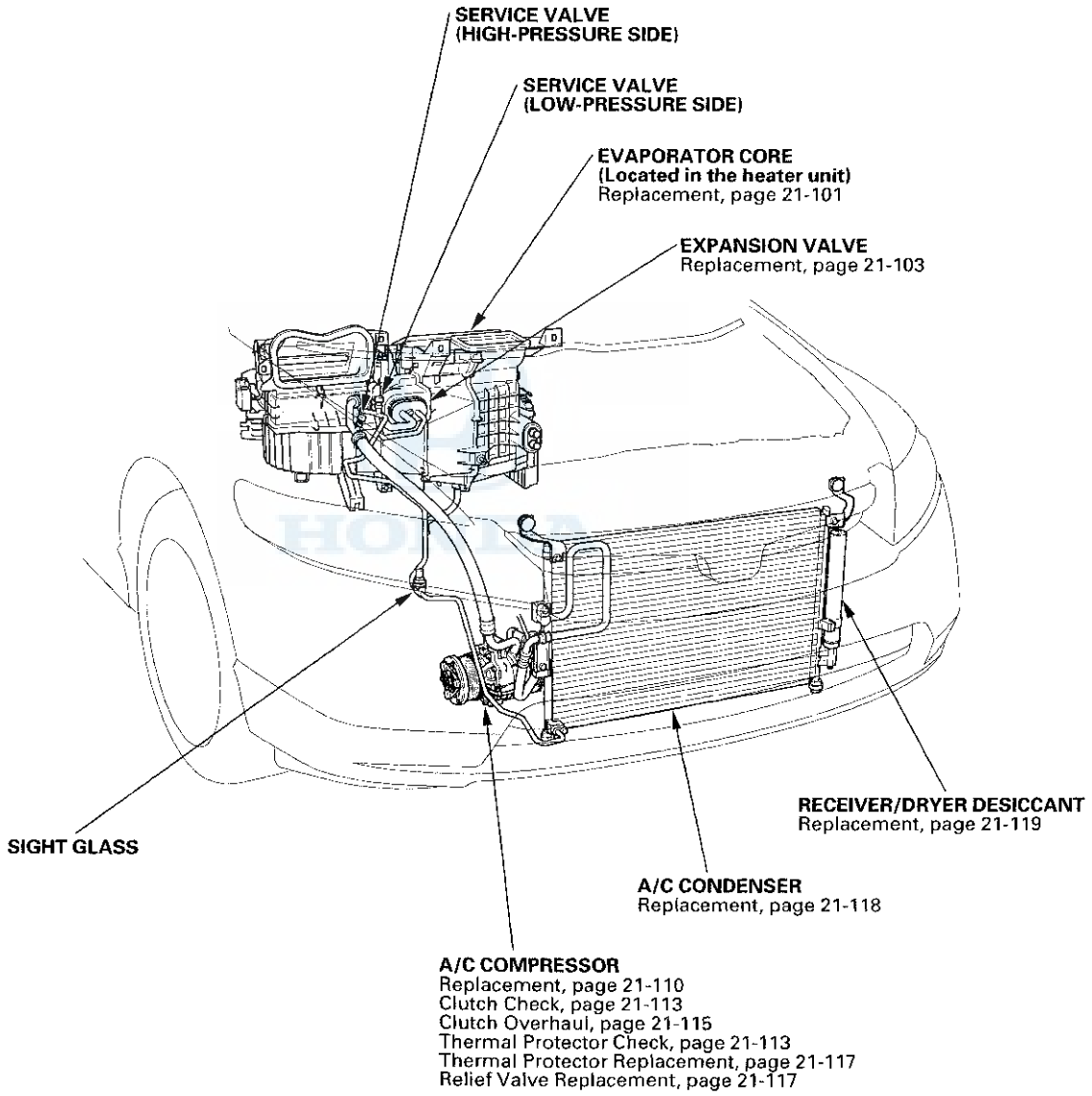

(cont'd)

Component Location Index (cont'd)

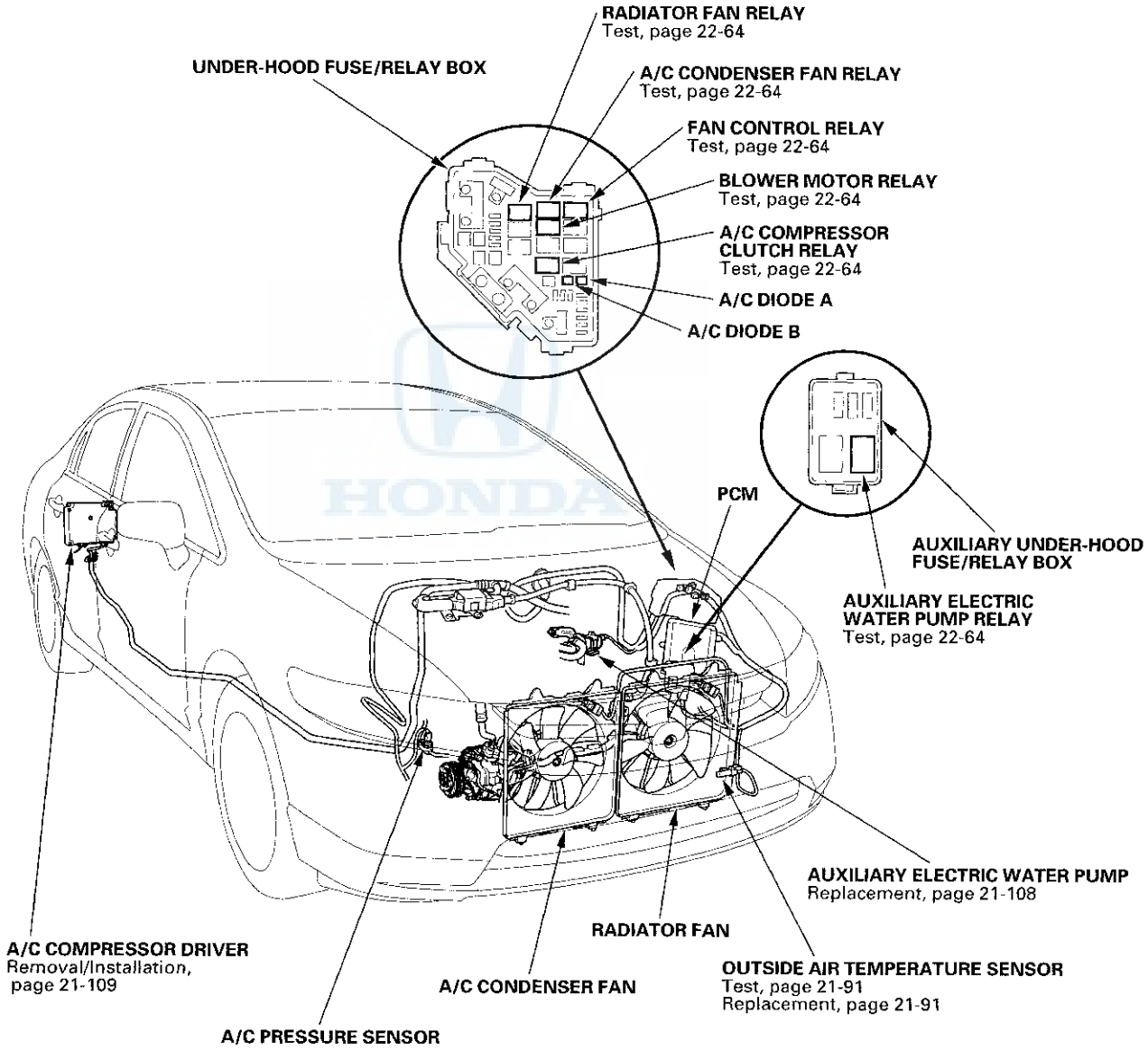

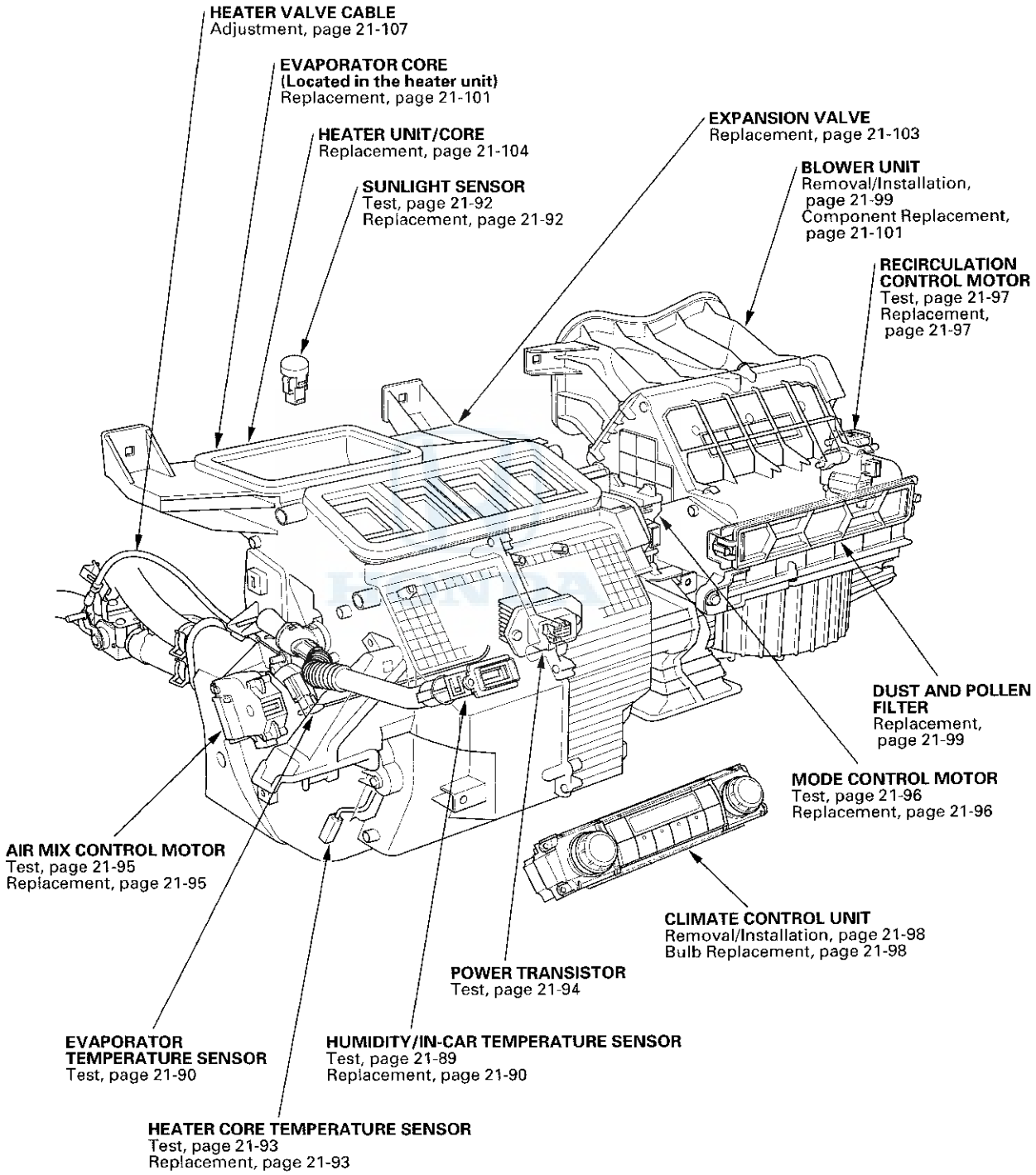
HEATER VALVE CABLE
Adjustment, page 21-107
EVAPORATOR CORE
(Located in the heater unit)
Replacement, page 21-101
HEATER UNIT/CORE
Replacement, page 21-104
SUNLIGHT SENSOR
Test, page 21-92
Replacement, page 21-92
EXPANSION VALVE
Replacement, page 21-103
BLOWER UNIT
Removal/Installation, page 21-99
Component Replacement, page 21-101
RECIRCULATION CONTROL MOTOR
Test, page 21-97
Replacement, page 21-97
DUST AND POLLEN FILTER
Replacement, page 21-99
MODE CONTROL MOTOR
Test, page 21-96
Replacement, page 21-96
AIR MIX CONTROL MOTOR
Test, page 21-95
Replacement, page 21-95
CLIMATE CONTROL UNIT
Removal/Installation, page 21-98
Bulb Replacement, page 21-98
POWER TRANSISTOR
Test, page 21-94
EVAPORATOR TEMPERATURE SENSOR
Test, page 21-90
HUMIDITY/IN-CAR TEMPERATURE SENSOR
Test, page 21-89
Replacement, page 21-90
HEATER CORE TEMPERATURE SENSOR
Test, page 21-93
Replacement, page 21-93

A/C Service Tips and Precautions

⚠WARNING

- Compressed air mixed with the R-134a forms a combustible vapor.
- The vapor can burn or explode causing serious injury.
- Never use compressed air to pressure test R-134a service equipment or vehicle air conditioning systems.

⚠CAUTION

- Air conditioning refrigerant or lubricant vapor can irritate your eyes, nose, or throat.
- Be careful when connecting service equipment.
- Do not breathe refrigerant or vapor.

The air conditioning system uses HFC-134a (R-134a) Refrigerant and polyol ester (POE) refrigerant, which are not compatible with CFC-12 (R-12) refrigerant, mineral oil, or polyalkyleneglycol (PAG) refrigerant oil. Do not use R-12 refrigerant or any refrigerant oil other than the specified POE refrigerant oil (Sanden SE-10Y) in the system. Do not use R-12 servicing equipment, as this will damage the air conditioning system or the servicing equipment.
Use only service equipment that is U.L.-listed and is certified to meet the requirements of SAE J2210 to remove R-134a from the air conditioning system.

If accidental system discharge occurs, ventilate the work area before resuming service.

R-134a service equipment or vehicle air conditioning systems should not be pressure tested or leak tested with compressed air.

Additional health and safety information may be obtained from the refrigerant and lubricant manufacturers.

- Always disconnect the negative cable from the battery whenever replacing air conditioning parts.
- Keep moisture and dirt out of the system. When disconnecting any lines, plug or cap the fittings immediately; don't remove the caps or plugs until just before you reconnect each line.
- Before connecting any hose or line, apply a few drops of refrigerant oil to the O-ring.
- When tightening or loosening a fitting, use a second wrench to support the matching fitting.
- When discharging the system, use an R-134a refrigerant recovery/recycling/charging station; don't release refrigerant into the atmosphere.

A/C System Inspection

Before troubleshooting any problem with the air conditioning system, do the following.

1. With the ignition switch in LOCK (0), inspect the A/C components, the pressure lines, and the hoses for stains that may indicate a refrigerant or a compressor oil leak.

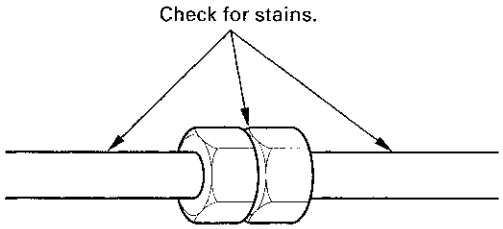

2. Check the A/C condenser for material clogging the fins or for damage to the fins:

   - Carefully clean any material from the A/C condenser (A) fins with water and detergent. If deeper cleaning is required, clean the fins with Honda Brite cleaner (P/N 08732-0020B).
   - Be sure to dry the A/C condenser completely.
   - Refer to the Refrigerant Leak Check (see page 21-123) to confirm leaks if there is visible damage to the A/C condenser.

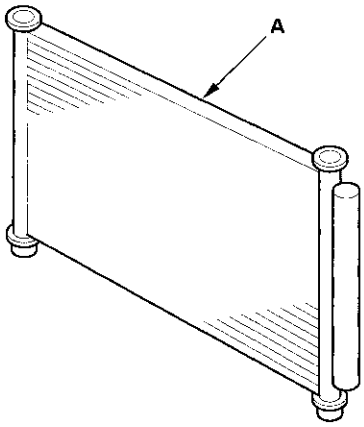

3. Inspect the drive belt (see page 10-9).

4. Make sure no material is blocking the air flow to the A/C condenser.

5. Check the dust and pollen filter. Replace it if it is clogged (see page 21-99).

6. Check for kinks or sharp bends in the A/C lines and hoses, which can greatly reduce system performance. Replace A/C lines and hoses if they are kinks or damaged (see page 21-9).

7. Start the engine, turn the air conditioning system on, and allow it to run for a few minutes and reach stable operation.

   - Check that the A/C operates at each position of the blower fan switch (except OFF). If the A/C does not operate, refer to the Symptom Troubleshooting.
   - Check that the A/C compressor clutch (A) is engaged. The pressure plate should be rotating at the same speed as the pulley. If the pressure plate does not engage, refer to the Symptom Troubleshooting.
   - Check that the radiator fan (B) and A/C condenser fan (C) operate when the A/C compressor clutch is engaged. If either fan fails to operate when the A/C compressor clutch is engaged, refer to the Symptom Troubleshooting.
   - Check that the engine idle speed is correctly maintained when the A/C is switched on and off and the A/C compressor clutch is engaged and disengaged.

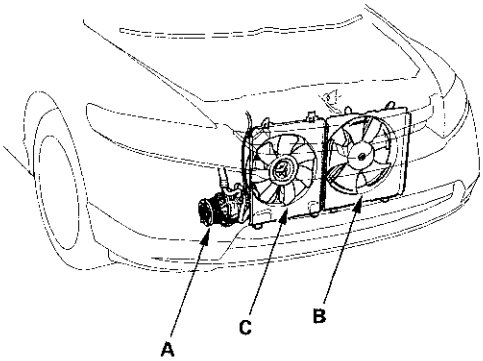

A/C Refrigerant Oil Replacement

⚠ WARNING

Using the wrong refrigerant oil increases the chance of electric shock or death.
- Use only SANDEN SE-10Y refrigerant oil when servicing the A/C system.

Required POE refrigerant oil: SANDEN SE-10Y

- P/N 38899-RCJ-A01: 120 mL (4 fl·oz)
- P/N 38899-RMX-A01: 50 mL (1 2/3 fl·oz)

The A/C compressor in this vehicle is powered by the IMA battery module, and this oil is required because it has unique electrical insulting qualities.
It is important to have the correct amount of refrigerant oil in the A/C system to ensure proper lubrication of the compressor. Too little oil damages the compressor; too much oil reduces the cooling capacity of the system, and can produce high vent temperatures.

NOTE:
- To avoid contamination, do not return the oil to the container once dispensed, and never mix it with other refrigerant oils.
- Use the refrigerant oil immediately after opening the container, and dispose of any unused oil. The oil rapidly absorbs moistures, which damages its electrical insulating properties.
- Do not spill the refrigerant oil on the vehicle; it may damage the paint; if it gets on the paint, wash it off immediately.

(cont'd)

A/C Refrigerant Oil Replacement (cont'd)

Adding refrigerant oil to the system

Add the recommended refrigerant oil to the suction port of the A/C compressor in the amount listed if you replace any of the following parts.

A/C condenser (including Receiver/ Dryer Desiccant)	50 mL (1 2/3 fl·oz)
Evaporator	40 mL (1 1/3 fl·oz)
Line or hose	10 mL (1/3 fl·oz)
Receiver/Dryer Desiccant	10 mL (1/3 fl·oz)
Leakage repair	25 mL (5/6 fl·oz)
A/C compressor	For A/C compressor replacement, subtract the volume of oil drained from the removed A/C compressor from 130 mL (4 2/5 fl·oz), and drain the calculated volume of oil from the new A/C compressor: 130 mL (4 2/5 fl·oz) — Volume of removed A/C compressor = Volume to drain from new A/C compressor. NOTE: Even if no oil is drained from the removed A/C compressor, don't drain more than 50 mL (1 2/3 fl·oz) from the new A/C compressor.

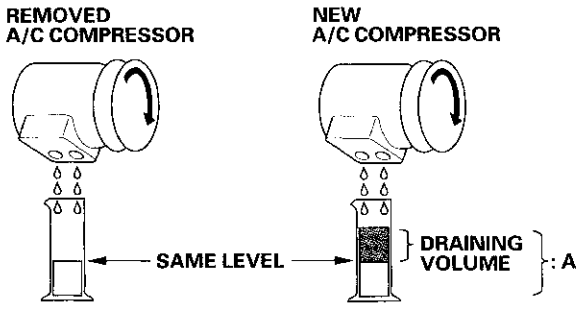

A: 130 mL (4 2/5 fl·oz)

Repairs needed if the wrong refrigerant oil was added

Use only the required polyol ester (POE) refrigerant oil SANDEN SE-10Y designed for the dual scroll hybrid compressor. Intermixing the recommended (POE) refrigerant oil with any other refrigerant oil (PAG or mineral oil, for example) will result in A/C compressor failure. Using the wrong refrigerant oil can also be a safety hazard (see page 21-6).

If the wrong refrigerant oil was added, and the A/C system is operated, the following components must be replaced:

- A/C compressor
- A/C condenser
- A/C evaporator
- Receiver/dryer
- A/C system lines and hoses

If the A/C system was not operated, then only the A/C compressor needs to be replaced.

A/C Line Replacement

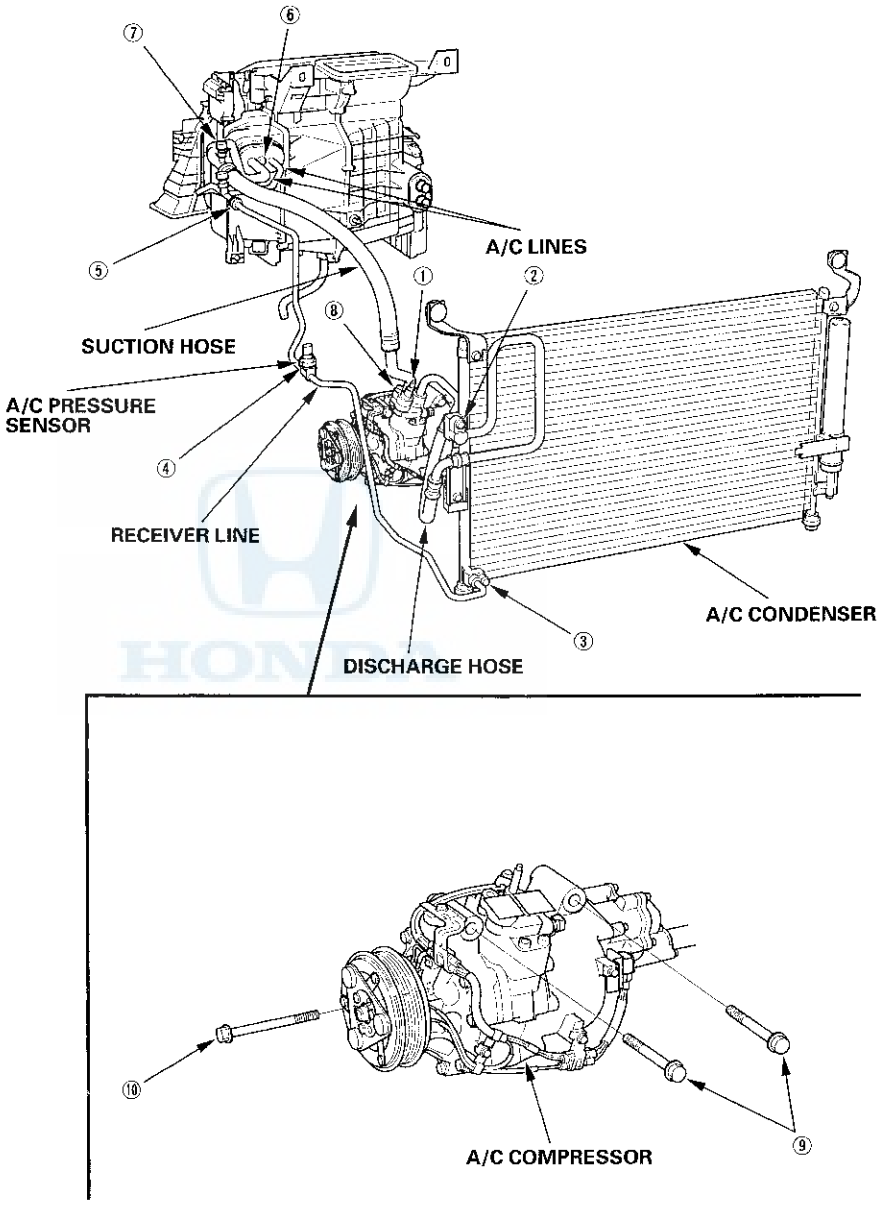

① Discharge hose to the A/C compressor (6 x 1.0 mm): 9.8 N·m (1.0 kgf·m, 7.2 lbf·ft)
② Discharge hose to the A/C condenser (6 x 1.0 mm): 9.8 N·m (1.0 kgf·m, 7.2 lbf·ft)
③ Receiver line to the A/C condenser (6 x 1.0 mm): 9.8 N·m (1.0 kgf·m, 7.2 lbf·ft)
④ A/C pressure sensor to the receiver line (11 x 1.0 mm): 11.8 N·m (1.2 kgf·m, 8.7 lbf·ft)
⑤ Receiver line to the A/C line (16 x 1.5 mm): 13.7 N·m (1.4 kgf·m, 10.1 lbf·ft)
⑥ A/C lines to the evaporator (6 x 1.0 mm): 9.8 N·m (1.0 kgf·m, 7.2 lbf·ft)
⑦ A/C line to the suction hose (24 x 1.5 mm): 31.4 N·m (3.2 kgf·m, 23.1 lbf·ft)
⑧ Suction hose to the A/C compressor (6 x 1.0 mm): 9.8 N·m (1.0 kgf·m, 7.2 lbf·ft)
⑨ A/C compressor to the engine block (10 x 1.25 mm): 45 N·m (4.6 kgf·m, 33.2 lbf·ft)
⑩ A/C compressor to the oil pan (10 x 1.25 mm): 45 N·m (4.6 kgf·m, 33.2 lbf·ft)

General Troubleshooting Information

How to Check for DTCs with the HDS

1. Make sure the ignition switch is in LOCK (0).
2. Connect the HDS to the data link connector (DLC) (A) located under the driver's side of the dashboard.

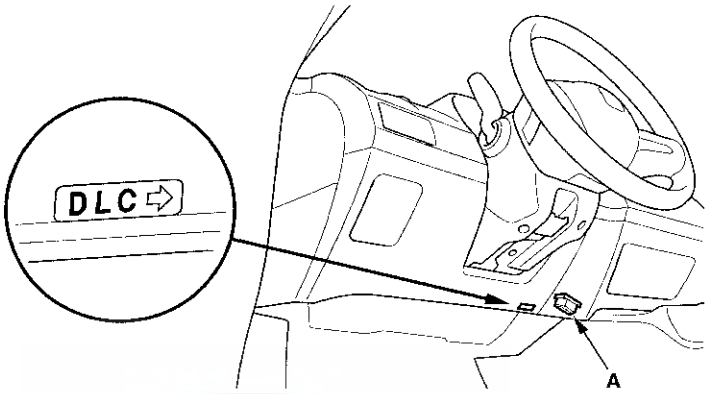

3. Turn the ignition switch to ON (II).
4. Make sure the HDS communicates with the vehicle and the climate control unit. If it doesn't, troubleshoot the DLC circuit (see page 11-213).
5. Select HVAC/CLIMATE CONTROL in the BODY ELECTRICAL menu.
6. Select DTCs in the HVAC/CLIMATE CONTROL menu.
7. Check for DTCs. If any DTCs are indicated, write down the DTCs, then go to the indicated DTC troubleshooting. If no DTCs are indicated, refer to symptom troubleshooting.

   NOTE:
   - After troubleshooting, clear the DTCs with the HDS.
   - For specific operations, refer to the user's manual that came with the HDS.

How to Use the Self-diagnostic Function with the HDS

1. Make sure the ignition switch is in LOCK (0).
2. Connect the HDS to the data link connector (DLC).
3. Turn the ignition switch to ON (II).
4. Make sure the HDS communicates with the vehicle and the climate control unit. If it doesn't, troubleshoot the DLC circuit (see page 11-213).
5. Select HVAC/CLIMATE CONTROL in the BODY ELECTRICAL menu.
6. Select INSPECTION in the HVAC/CLIMATE CONTROL menu.
7. Select CLIMATE CONTROL SELF TEST in the INSPECTION menu.
8. Check for DTCs. If any DTCs are indicated, write down the DTCs, then go to the indicated DTC troubleshooting.

   NOTE:
   - After troubleshooting, clear the DTCs with the HDS.
   - For specific operations, refer to the user's manual that came with the HDS.

HONDA

(cont'd)

General Troubleshooting Information (cont'd)

How to Use the Self-diagnostic Function without the HDS

The climate control unit has a self-diagnostic function. To run the self-diagnostic function, do the following:

1. Turn the ignition switch to LOCK (0).

2. Press and hold the AUTO and RECIRCULATION buttons, turn the ignition switch to ON (II), then release the AUTO and RECIRCULATION buttons.

3. ALL LCD segments come on for 2 seconds, then the self-diagnostic function begins.

   NOTE:
   - The blower motor will run at various speeds when in the self-diagnostic mode, regardless of what the panel is displaying.
   - If there is any problem in the system, the system flashes "AUTO 88" or alternately flashes "AUTO 88" and one or more of the 14 segments (A through P). Refer to checking for DTCs.
   - If there are no problems detected, the segments will not illuminate, and the system will appear to be turned off.

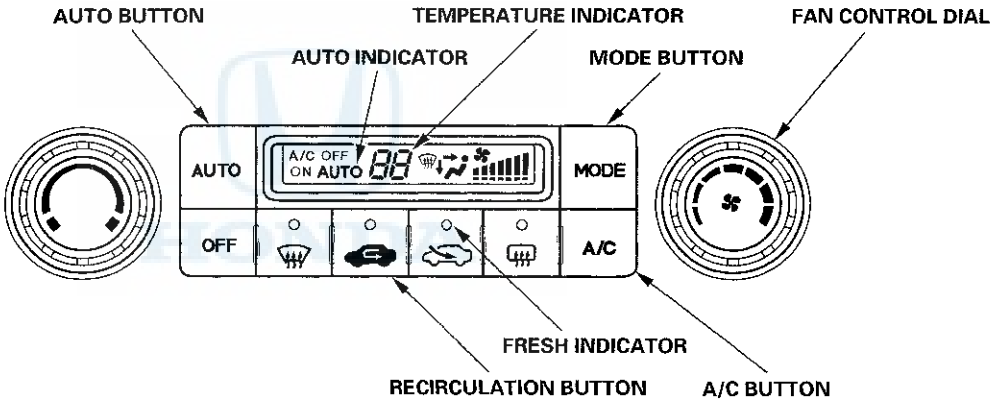

Canceling the Self-diagnostic Function

4. Turn the ignition switch to LOCK (0) to cancel the self-diagnostic function. After completing repair work, run the self-diagnostic function again to make sure that there are no other DTCs.

Checking for DTCs

The temperature display indicates single or multiple DTCs. The DTC(s) will be displayed on one of three screens (I, II, III). The system always starts on screen I. Turn the fan control dial clockwise to go to screens II and III, and counterclockwise to go from a higher numbered screen to a lower numbered screen. Check all three screens for DTCs.

- If the DTC is displayed on screen I, the system alternately flashes "AUTO 88" and one or more of segments A through P.
- If the DTC is displayed on screen II, "AUTO" is on steady, and the system alternately flashes "88" and one or more of segments A through P.
- If the DTC is displayed on screen III (the FRESH indicator comes on in screen III), the system alternately flashes "AUTO 88" and one or more of segments A through P.

TEMPERATURE INDICATOR

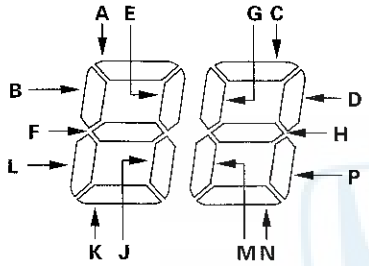

AUTO INDICATOR

AUTO

HONDA

(cont'd)

General Troubleshooting Information (cont'd)

Screen	DTC (Temperature Indicator Segment, AUTO and FRESH Indicator)	Detection Item
(I)	A	An open in the in-car temperature sensor circuit (see page 21-39)
	B	A short in the in-car temperature sensor circuit (see page 21-40)
	C	An open in the outside air temperature sensor circuit (see page 21-41)
	D	A short in the outside air temperature sensor circuit (see page 21-42)
	E	An open in the sunlight sensor circuit (see page 21-43)
	F	A short in the sunlight sensor circuit (see page 21-44)
	G	An open in the evaporator temperature sensor circuit (see page 21-45)
	H	A short in the evaporator temperature sensor circuit (see page 21-47)
	J	An open in the air mix control motor circuit (see page 21-48)
	K	A short in the air mix control motor circuit (see page 21-49)
	L	A problem in the air mix control linkage, door, or motor (see page 21-50)
	M	An open or short in the mode control motor circuit (see page 21-52)
	N	A problem in the mode control linkage, doors, or motor (see page 21-54)
	P	A problem in the blower motor circuit (see page 21-55)
(II)	A and AUTO	An open in the recirculation control motor circuit (see page 21-64)
	B and AUTO	A problem in the recirculation control linkage, door, or motor (see page 21-63)
	C and AUTO	Climate control unit internal error (see page 21-36)
	D and AUTO	Climate control unit lost communication with gauge control module (TACH) (ILLUMI message) (see page 21-36)
	E and AUTO	A short in the recirculation control motor circuit (see page 21-37)
	F and AUTO	Climate control unit lost communication with gauge control module (TACH) (ECT message) (see page 21-36)
	H and AUTO	A short in the heater core temperature sensor circuit (see page 21-72)
	J and AUTO	Climate control unit lost communication with gauge control module (TACH) (VSP message) (see page 21-36)
	K and AUTO	Communication bus line error (see page 22-104)
	L and AUTO	Climate control unit lost communication with gauge control module (TACH) (NE message) (see page 21-36)
	M and AUTO	An open in the humidity sensor circuit (see page 21-59)
	N and AUTO	A short in the humidity sensor circuit (see page 21-60)
	P and AUTO	An open in the heater core temperature sensor circuit (see page 21-71)
(III)	A and FRESH	A problem in the auxiliary electric water pump circuit (see page 21-68)
	B and FRESH	A problem in the auxiliary electric water pump connection (see page 21-74)
	F and FRESH	An open in the thermal protector circuit (see page 21-66)
	J and FRESH	IMA communication bus line error (see page 21-74)
	L and FRESH	A short in the thermal protector circuit (see page 21-67)

Displaying Sensor Inputs at the Climate Control Unit

The climate control unit has a mode that displays the sensor inputs it receives. This mode shows you what data the climate control unit is receiving from each of the sensors, one at a time, and it can help you determine if a sensor is faulty.

Check these items before using the sensor input display mode

1. Turn the ignition switch to ON (II), and check the recirculation door function; press the recirculation button to switch from FRESH to RECIRC. The air volume and sound should change slightly.

2. Set the temperature control knob to the desired test temperature. When selecting the test temperature, note these items:

   - "Lo" temperature setting will default to MAX COOL, VENT, and RECIRC.
   - "Hi" temperature setting will default to MAX HOT, FLOOR, and FRESH.
   - 58 through 86 °F settings will use the automatic climate control logic.

3. Turn the ignition switch to LOCK (0).

HONDA

(cont'd)

General Troubleshooting Information (cont'd)

To run the sensor input display mode, follow these steps

1. Make sure the ignition switch is in LOCK (0).
2. Press and hold both the AUTO and MODE buttons, then start the engine.
3. After the engine starts, release both buttons. The display panel control unit will flash the sensor number, and then the value for that sensor. Record the value displayed.
4. To advance to the next sensor, press the A/C button.

Sensor	Item	Displayed Value
1	Mode Positioning	BIT
2	In-car Temperature	℃
3	Outside Air Temperature	℃
4	Solar Radiation Sensor Value: Dark = 00, Flashlight = 04, Cloudy = 10, Sunny = 65	10 kcal/m^2·h
5	Evaporator Outlet Air Temperature	℃
6	Humidity Sensor Valve	%
7	Heater Core Temperature	℃
8	Air Mix Opening (Low value indicates cooler air distribution, higher value indicates warmer air distribution)	% of opening
9	Recirculation Opening	% of opening
A	Vehicle Speed (Vehicle must be driven to display speed)	km/h
B	Engine Coolant Temperature	℃
C	A/C Compressor Revolution Feedback	100 rpm
D	Vent Temperature Air Out (TAO)	℃
E	Solar Radiation azimuth (With navigation system)	10°
F	Solar Radiation angle of elevation (With navigation system)	10°

NOTE:
- The sensor values will be displayed in degrees Celsius (℃) or an alphanumeric code. Use the chart to convert the value to degrees Fahrenheit (℉).
- If the sensor value displays "Er" this indicates there is an open or short in the circuit or sensor. Check for DTCs using the HDS, or use the climate control self-diagnostic function.
- If necessary, compare the sensor input display to a known-good vehicle under the same test conditions.
- If the sensor is out of the normal range, refer to the sensor test or substitute a known-good sensor, and recheck.

5. To cancel the sensor input display mode, press the AUTO button or turn the ignition switch to LOCK (0).

Celsius to Fahrenheit Conversion Table

℃	℉	℃	℉	℃	℉	℃	℉	℃	℉
0	32	10	50	20	68	30	86	40	104
1	34	11	52	21	70	31	88	41	106
2	36	12	54	22	72	32	90	42	108
3	37	13	55	23	73	33	91	43	109
4	39	14	57	24	75	34	93	44	111
5	41	15	59	25	77	35	95	45	113
6	43	16	61	26	79	36	97	46	115
7	45	17	63	27	81	37	99	47	117
8	46	18	64	28	82	38	100	48	118
9	48	19	66	29	84	39	102	49	120

℃	℉	℃	℉	℃	℉	℃	℉	℃	℉
50	122	60	140	70	158	80	176	90	194
51	124	61	142	71	160	81	178	91	196
52	126	62	144	72	162	82	180	92	198
53	127	63	145	73	163	83	181	93	199
54	128	64	147	74	165	84	183	94	201
55	131	65	149	75	167	85	185	95	203
56	133	66	151	76	169	86	187	96	205
57	135	67	152	77	170	87	188	97	207
58	136	68	154	78	172	88	190	98	208
59	139	69	158	79	174	89	192	99	210

Alphanumeric Conversion Table

Display Reading (Alphanumeric)	℃	℉	%
A1 thru A9	−1 thru −9	30 thru 16	−1 thru −9
B0 thru B9	−10 thru −19	14 thru −2	−10 thru −19
C0 thru C9	−20 thru −29	−4 thru −20	−20 thru −29
D0 thru D9	−30 thru −39	−22 thru −38	−30 thru −39
E0 thru E9	−40 thru −49	−40 thru −58	−40 thru −49
F0 thru F9	———	———	+100 thru +109

Alphanumeric Conversion Table (Mode Positioning)

Display Reading (Alphanumeric)	Mode Position
2	OVER VENT
A	VENT
8	VENT-HEAT/VENT
c	HEAT/VENT
d	HEAT/VENT-HEAT
9	HEAT
b	HEAT-HEAT/DEF
3	HEAT/DEF
7	HEAT/DEF-DEF
6	DEF
E	OVER DEF

DTC Troubleshooting Index

Checking the DTCs by HDS

DTC	Detection Item or Symptom	ECU	DTC type	Page
B1200	Communication bus line error	Climate control unit	Loss of communication	(see page 22-104)
B1202	Climate control unit internal error	Climate control unit	Internal error	(see page 21-36)
B1205	Climate control unit lost communication with gauge control module (TACH) (VSP/NE message)	Climate control unit	Loss of communication	(see page 21-36)
B1206	Climate control unit lost communication with gauge control module (TACH) (ECT message)	Climate control unit	Loss of communication	(see page 21-36)
B1207	Climate control unit lost communication with gauge control module (TACH) (ILLUMI message)	Climate control unit	Loss of communication	(see page 21-36)
B1209	Climate control unit lost communication with MICU (MICU/DOOR SW message)	Climate control unit	Loss of communication	(see page 21-36)
B1220	A short in the recirculation control motor circuit	Climate control unit	Signal error	(see page 21-37)
B1225	An open in the in-car temperature sensor circuit	Climate control unit	Signal error	(see page 21-39)
B1226	A short in the in-car temperature sensor circuit	Climate control unit	Signal error	(see page 21-40)
B1227	An open in the outside air temperature sensor circuit	Climate control unit	Signal error	(see page 21-41)
B1228	A short in the outside air temperature sensor circuit	Climate control unit	Signal error	(see page 21-42)
B1229	An open in the sunlight sensor circuit	Climate control unit	Signal error	(see page 21-43)
B1230	A short in the sunlight sensor circuit	Climate control unit	Signal error	(see page 21-44)
B1231	An open in the evaporator temperature sensor circuit	Climate control unit	Signal error	(see page 21-45)
B1232	A short in the evaporator temperature sensor circuit	Climate control unit	Signal error	(see page 21-47)
B1233	An open in the air mix control motor circuit	Climate control unit	Signal error	(see page 21-48)
B1234	A short in the air mix control motor circuit	Climate control unit	Signal error	(see page 21-49)
B1235	A problem in the air mix control linkage, door, or motor	Climate control unit	Signal error	(see page 21-50)
B1239	An open or short in the mode control motor circuit	Climate control unit	Signal error	(see page 21-52)
B1240	A problem in the mode control linkage, doors, or motor	Climate control unit	Signal error	(see page 21-54)
B1241	A problem in the blower motor circuit	Climate control unit	Signal error	(see page 21-55)

Checking the DTCs by HDS

DTC	Detection Item or Symptom	ECU	DTC type	Page
B2967	An open in the humidity sensor circuit	Climate control unit	Signal error	(see page 21-59)
B2968	A short in the humidity sensor circuit	Climate control unit	Signal error	(see page 21-60)
B2983	A problem in the recirculation control linkage, door, or motor	Climate control unit	Signal error	(see page 21-63)
B2986	An open in the recirculation control motor circuit	Climate control unit	Signal error	(see page 21-64)
B2989	A problem in the A/C compressor motor	Climate control unit	Signal error	(see page 21-65)
B2990	A problem in the A/C compressor driver	Climate control unit	Signal error	(see page 21-65)
B2992	An open in the thermal protector circuit	Climate control unit	Signal error	(see page 21-66)
B2993	A short in the thermal protector circuit	Climate control unit	Signal error	(see page 21-67)
B2995	A problem in the auxiliary electric water pump circuit	Climate control unit	Signal error	(see page 21-68)
B2996	An open in the heater core temperature sensor circuit	Climate control unit	Signal error	(see page 21-71)
B2997	A short in the heater core temperature sensor circuit	Climate control unit	Signal error	(see page 21-72)
B2998	A problem in the A/C compressor driver	Climate control unit	Signal error	(see page 21-73)
B2999	A problem in the A/C compressor delivery valve	Climate control unit	Signal error	(see page 21-73)

HONDA

Symptom Troubleshooting Index

Symptom	Diagnostic procedure	Also check for
The blower and heater controls and the A/C system do not work	• Probable cause: Climate control unit malfunction • Do the climate control power and ground circuit troubleshooting (see page 21-75)	• HVAC DTCs (see page 21-10) • Blown fuse No. 36 (10 A) in the driver's under-dash fuse/relay box • Poor ground at G504 (see page 22-26) • Poor or loose connections at the terminals
The A/C compressor clutch and the A/C condenser/radiator fans are inoperative, but the blower and heater controls work	1. Probable cause: A/C pressure sensor circuit malfunction 2. Troubleshoot the pressure sensor circuit: • A/C pressure sensor circuit low voltage (see page 11-323) • A/C pressure sensor circuit high voltage (see page 11-325) NOTE: The A/C pressure sensor can malfunction without setting a DTC	• HVAC DTCs (see page 21-10) • Powertrain DTCs (see page 11-3) • A/C signal circuit troubleshooting (see page 21-86) • Poor or loose connections at the terminals
The A/C compressor clutch does not engage, but the A/C condenser/ radiator fans operate, and the blower and heater controls work	• Probable cause: No power to the A/C compressor clutch • Do the A/C compressor clutch circuit troubleshooting (see page 21-84)	• HVAC DTCs (see page 21-10) • Blown fuse No. 20 (7.5 A) in the under-hood fuse/relay box • A/C system pressure is normal (see page 21-29) • A/C thermal protector has continuity (see step 5 on page 21-114) • Poor or loose connections at the terminals
The A/C condenser fan and/or the radiator fan do not run with the A/C on	• Probable cause: Condenser/radiator fan low speed circuit malfunction • Do the radiator and A/C condenser fan low speed circuit troubleshooting (see page 21-78)	• HVAC DTCs (see page 21-10) • Powertrain DTCs (see page 11-3) • Blown fuse No. 7 (20 A) in the under-hood fuse/relay box • Poor ground at G301 (see page 22-20) • Poor or loose connections at the terminals
The condenser/radiator fans do not run at high speed, but do run at low speed	1. Probable cause: Malfunction in the fan(s) high speed circuit 2. Do the following troubleshooting as needed: • A/C condenser fan high speed circuit troubleshooting (see page 21-75) • Radiator fan high speed circuit troubleshooting (see page 10-19)	• HVAC DTCs (see page 21-10) • Powertarin DTCs (see page 11-3) • Blown fuse No. 6 (20 A) and/or No.7 (20 A) in the under-hood fuse/relay box • Poor ground at G301 (see page 22-20) • Poor or loose connections at the terminals

Symptom	Diagnostic procedure	Also check for
During auto idle stop, the A/C does not work	• Probable cause: A/C compressor driver circuit malfunction • Do the A/C compressor driver power circuit troubleshooting (see page 21-88)	• Powertrain DTCs (see page 11-3) • Blown fuse No. 22 (7.5 A) in the under-hood fuse/relay box • Poor ground at G902 (see page 22-37) • A/C signal circuit troubleshooting (see page 21-86)
Voice commands do not work	• Probable cause: Communication problem between the climate control unit and the navigation system • Do the navigation communication line circuit troubleshooting (see page 21-76)	• HVAC DTCs (see page 21-10) • Navi system link (see page 23-124) • Poor or loose connections at the terminals
Blower fan runs slower than expected in cold weather (when in AUTO mode) NOTE: It is normal for the blower fan to run slowly until the coolant temperature rises when in AUTO mode	1. Probable cause: Engine coolant temperature (ECT) circuit malfunction 2. Troubleshooting the ECT sensor circuit: • ECT sensor 2 circuit low voltage (see page 11-151) • ECT sensor 2 circuit high voltage (see page 11-152)	• HVAC DTCs (see page 21-10) • Powertrain DTCs (see page 11-3) • Blower motor operation
The A/C compressor clutch cycles rapidly on and off	• Probable cause: A/C system is very low on refrigerant, indicating a possible leak • Do the refrigerant leak check (see page 21-123) and repair any leaks. Replace the receiver/dryer (see page 21-119), then recharge the system to specifications (see page 21-122)	• HVAC DTCs (see page 21-10) • If there is no leak and the refrigerant level is normal, do the A/C compressor clutch circuit troubleshooting (see page 21-84), and look for an intermittent problem
Warm air comes out of the vents, and the high pressure liquid line is very hot	• Probable causes: The A/C system is overcharged (too much refrigerant), or the condenser is malfunctioning • Recover A/C refrigerant (see page 21-120), then check the condenser for restrictions or poor airflow. Repair as needed. Recharge the system to specifications (see page 21-122)	• Incorrect tension or abnormal wear on the drive belt. Replace the belt and/or the belt tensioner as needed • Proper operation of the condenser/radiator fans. Repair as needed • Signs of an overheated engine. Repair as needed

(cont'd)

Symptom Troubleshooting Index (cont'd)

Symptom	Diagnostic procedure	Also check for
Warm air comes out of the vents. The suction line is cool to warm, and the discharge line is warm to hot	• Probable cause: A/C system is low on refrigerant, indicating a possible leak • Do the refrigerant leak check (see page 21-123) and repair any leaks. Recharge the system to specifications (see page 21-122)	• HVAC DTCs (see page 21-10) • Add refrigerant oil damaging on the part you replaced (see page 21-7)
Warm air comes out of the vents. The suction line is cool to warm, the discharge line is warm to hot, and there is no frost on the expansion valve	• Probable cause: Excessive air and/or moisture in the system, indicating a possible leak • Do the refrigerant leak check (see page 21-123) and repair any leaks. Replace the receiver/dryer (see page 21-119), then recharge the system to specifications (see page 21-122)	• HVAC DTCs (see page 21-10) • Check the amount of refrigerant oil in the system. Adjust the oil level as needed
Warm air comes out of the vents. The liquid line or the condenser outlet is abnormally cool, or there is frost or condensation on the receiver/dryer	• Probable cause: A restriction in the high-pressure side of the system • Recover A/C refrigerant (see page 21-120), then check the liquid line, the receiver/dryer, and the condenser for restrictions. Repair as needed. Recharge the system to specifications (see page 21-122)	HVAC DTCs (see page 21-10)
There is heavy frost or condensation on the expansion valve, and frost on the suction line	• Probable cause: A restriction in the low-pressure side of the system • Recover A/C refrigerant (see page 21-120), then check the suction line and the expansion valve for restrictions. Repair as needed. Recharge the system to specifications (see page 21-122)	HVAC DTCs (see page 21-10)
Warm air comes out of the vents, and there is frost on the expansion valve	• Probable cause: The expansion valve is stuck closed • Replace the expansion valve (see page 21-103)	• HVAC DTCs (see page 21-10) • Check the old expansion valve for contamination. If contaminants are found, replace the A/C system component that caused the contamination
The temperature of the liquid line is the same on both sides of the expansion valve, and the evaporator coil or suction line has heavy condensation	• Probable cause: The expansion valve is stuck open • Replace the expansion valve (see page 21-103)	• HVAC DTCs (see page 21-10) • Check the old expansion valve for contamination. If contaminants are found, replace the A/C system component that caused the contamination

Symptom	Diagnostic procedure	Also check for
Warm air comes out of the vents, but operation is normal otherwise	• Probable cause: Compressor failure • Do the A/C system test (see page 21-129), and correct any problems. If necessary, replace the compressor (see page 21-110)	• HVAC DTCs (see page 21-10) • Add refrigerant oil depending on the part you replaced (see page 21-7)
Driver's and passenger's side vent temperatures vary by more than 20 °F (11 °C)	1. Probable causes: The recirculation control door or the air mix door is malfunctioning 2. Do the following troubleshooting: • Recirculation control motor test (see page 21-97) • Air mix control motor test (see page 21-95)	• HVAC DTCs (see page 21-10) • Poor or loose connections at the terminals
HDS does not communicate with the climate control unit or the vehicle	Troubleshoot the DLC circuit (see page 11-213)	
Insufficient heating	1. Check the coolant level (see page 10-6) 2. Check the radiator cap (see page 10-3) 3. Check the coolant temperature during normal operation 4. Check the heater core inlet hose temperature: • If it is COLD, check for restrictions in the hose, a damaged or leaking thermostat, or a damaged or leaking water pump • If it is HOT, check for restrictions in the heater core. Back flush or replace the heater core 5. Do the air mix control motor test (see page 21-95) 6. Check the blower motor unit for obstructions 7. Check for air leaks around the ducts and vents	• HVAC DTCs (see page 21-10) • Damaged cylinder head gasket

System Description

The air conditioning A/C system removes heat from the passenger compartment by transferring heat from the ambient air to the evaporator. The A/C system refrigerant expands in the evaporator, and the evaporator becomes very cold and adsorbs the heat from the ambient air. The blower fan pushes air across the evaporator where the heat is absorbed, and then it blows the cool air into the passenger compartment.

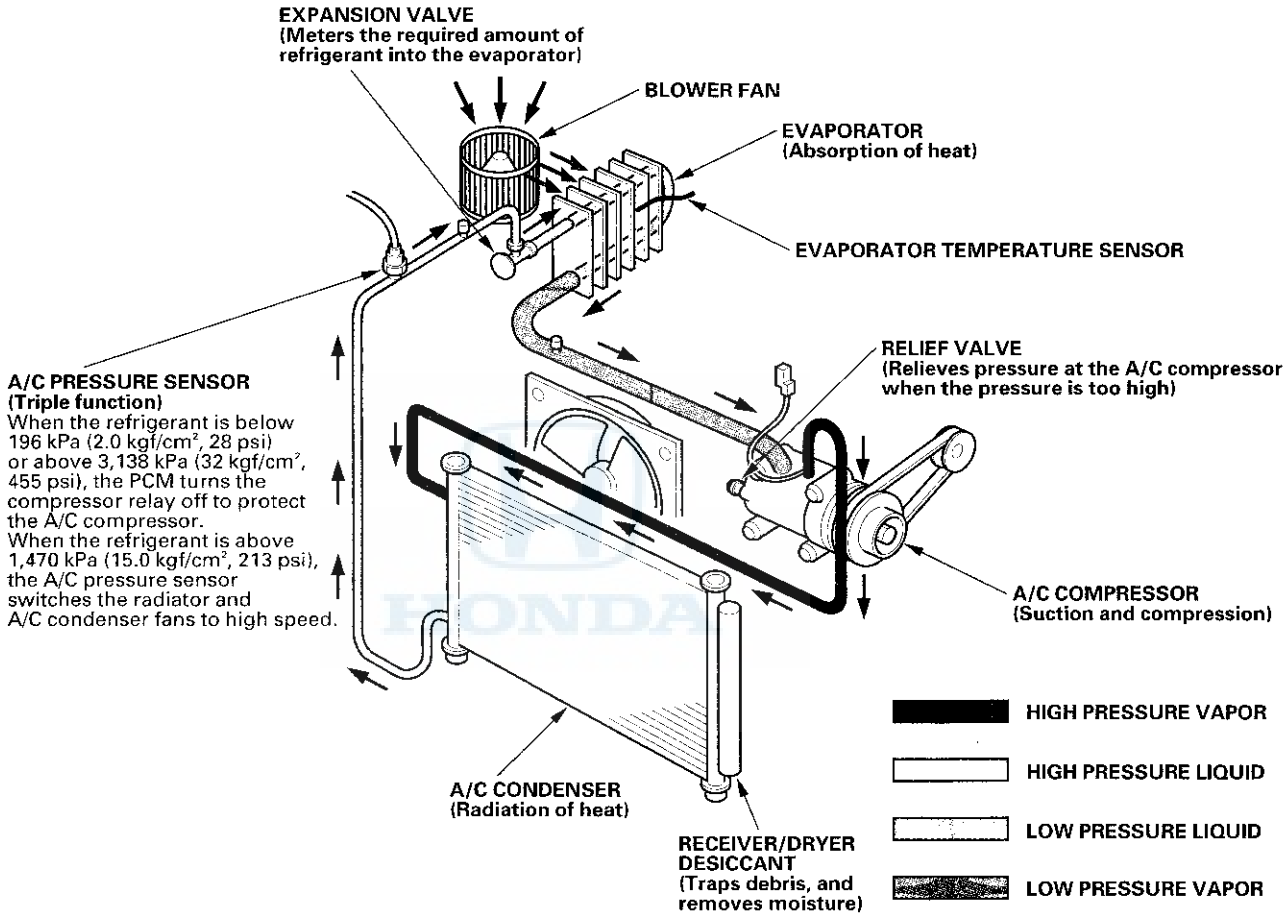

This vehicle uses HFC-134a (R-134a) refrigerant, which does not contain chlorofluorocarbons. Pay attention to the following service items:

- Do not mix refrigerants CFC-12 (R-12) and HFC-134a (R-134a). They are not compatible.
- Use only the required Polyol Ester (POE) refrigerant oil (SANDEN SE-10Y) designed for the R-134a A/C compressor. Intermixing the recommended (POE) refrigerant oil with any other refrigerant oil will result in A/C compressor failure. Using the wrong refrigerant oil can also be a safety hazard (see page 21-7).
- All A/C system parts (A/C compressor, discharge line, suction line, evaporator, A/C condenser, receiver/dryer, expansion valve, O-rings for joints) are designed for refrigerant R-134a. Do not exchange with R-12 parts.
- Use a halogen gas leak detector designed for refrigerant R-134a.
- R-12 and R-134a refrigerant servicing equipment are not interchangeable. Use only a recovery/recycling/charging station that is U.L.-listed and is certified to meet the requirements of SAE J2210 to service the R-134a air conditioning systems.
- Always recover refrigerant R-134a with an approved recovery/recycling/charging station before disconnecting any A/C fitting.

A/C Compressor

The dual scroll hybrid compressor is a twin chamber dual compressor, that can use both mechanical (belt-driven) and electric power (motor-driven) to compress refrigerant.

The mechanical side uses a normal electric clutch controlled by the climate control module, and is diagnosed using traditional diagnostic procedures.

The electric motor side uses a brushless, three-phase motor driven by a controller in the intelligent power unit (IPU). The climate control module controls the hybrid compressor motor operation, and actual motor speed is determined by the A/C compressor driver in the IMA battery module.

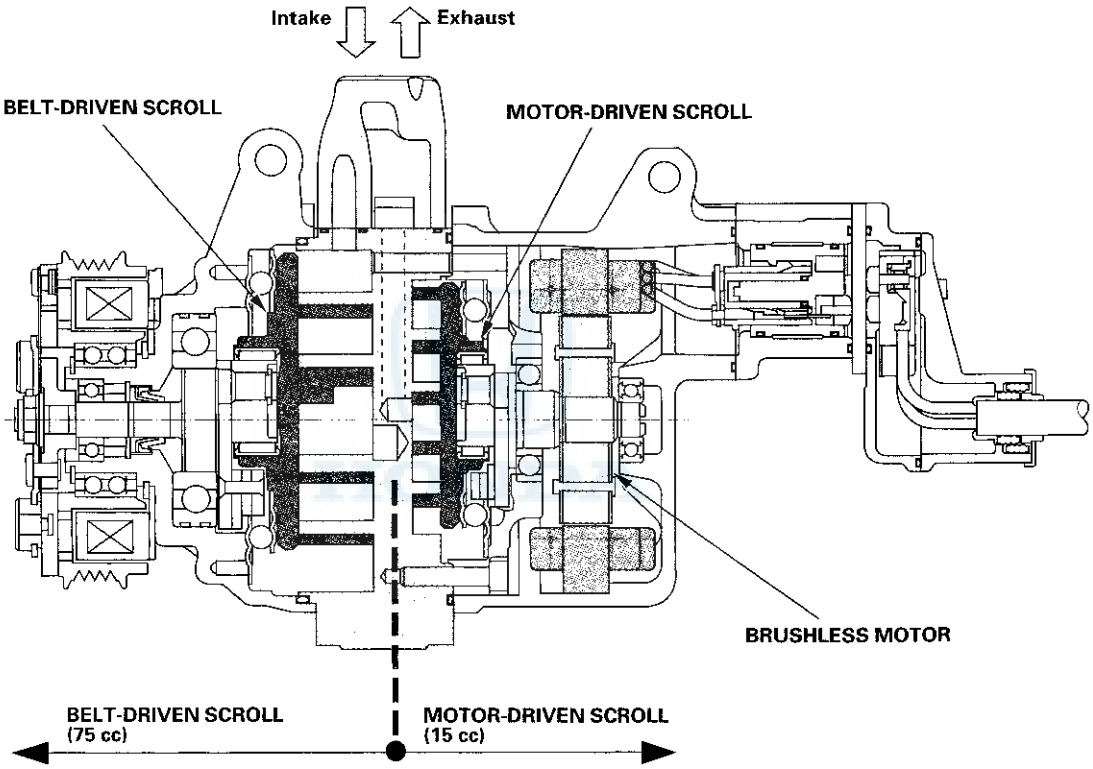

Compressor Operation Logic
The Hybrid A/C Compressor has 3 stages. The climate control module determines which stage the compressor should be in and sends the request to the PCM.

Stage 1 (start up)- combined operation (mechanical and electric power).
Stage 2-Mechanical only
Stage 3-Variable speed electric motor only

NOTE: The system will not transition from stage 1 to stage 3 directly or from stage 3 to stage 1 directly. The compressor transitions through each stage in sequence.

(cont'd)

System Description (cont'd)

Stage 1. Uses both sides of the compressor for maximum cool down. The electric motor runs at Maximum RPM anytime the evaporator temperature is above a predetermined threshold, and then drops the RPM as the evaporator temperature decreases.

Stage 2. The mechanically driven side is used when a stable temperature is reached inside the vehicle. This is determined by blower fan speed. If the fan speed is high, the electric compressor cannot maintain the evaporator temperature.

Stage 3. Once the vehicle's interior temperature stabilizes, the electric compressor is used to maintain the interior temperature. The PCM decides how fast to turn the electric compressor based on all inputs. If the interior temperature rises above the threshold value, the system switches to the mechanically driven compressor, and shuts down the electric compressor.

During idle stop, the compressor speed initially drops to a maximum of 1,000 RPM to reduce under hood noise. The speed will then slowly increase when additional cooling is called for. Blower fan speed also adjusts with compressor speed.

Auxiliary Electric Water Pump

A 12 V auxiliary electric water pump is used to circulate coolant to maintain heater performance during idle stop.

Auxiliary Electric Water Pump logic
The climate control unit operates the pump, based on an idle stop signal from the PCM. The pump maintains heater temperature during idle stop. However, using hot coolant from the engine will cool the engine. If the ECT temperature drops below a predetermined setting the engine will restart. There is also a temperature sensor located at the heater core. It is used to monitor the auxiliary electric water pump operation. If the pump fails, the temperature sensor detects rapid cooling of the heater core. In addition, the auxiliary electric water pump connector includes a second set of contacts to establish continuity through the connector. If these contacts open, the climate control unit will set a DTC.

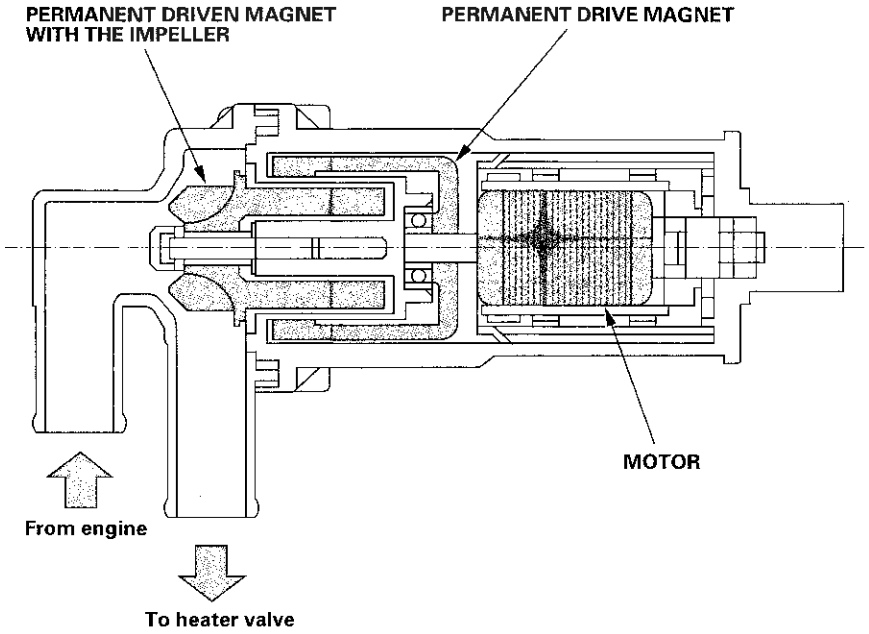

A/C Compressor Driver

The A/C compressor driver supplies the A/C motor compressor with switched high voltage from the IMA battery module. The A/C compressor driver receives signals from the MCM/PCM and the HVAC climate control panel through a CAN Bus, which the compressor driver uses to match A/C compressor speed to the driving conditions and the cooling request. In case of a system failure the A/C compressor driver will communicate a DTC through the CAN Bus. The DTC is displayed through the HVAC and/or the IMA system depending on the failure.

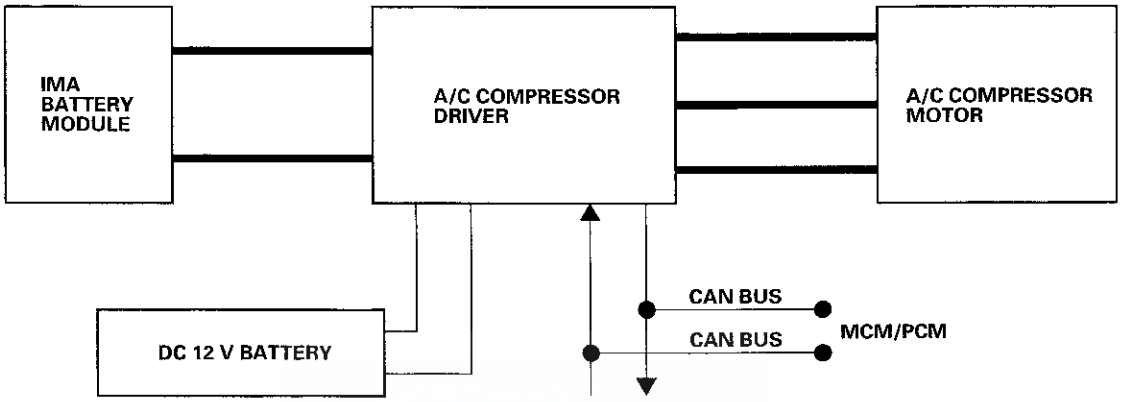

(cont'd)

System Description (cont'd)

Humidity/In-car Temperature Sensor

The humidity/in-car temperature sensor contains two sensors. One sensor is for humidity detection, and the other for in-car temperature detection. When the climate control unit receives signals from the humidity sensor, that the humidity in the vehicle is very low, the climate control unit reduces the compressor run-time. Engine power loss is kept to a minimum, and fuel economy is increased.

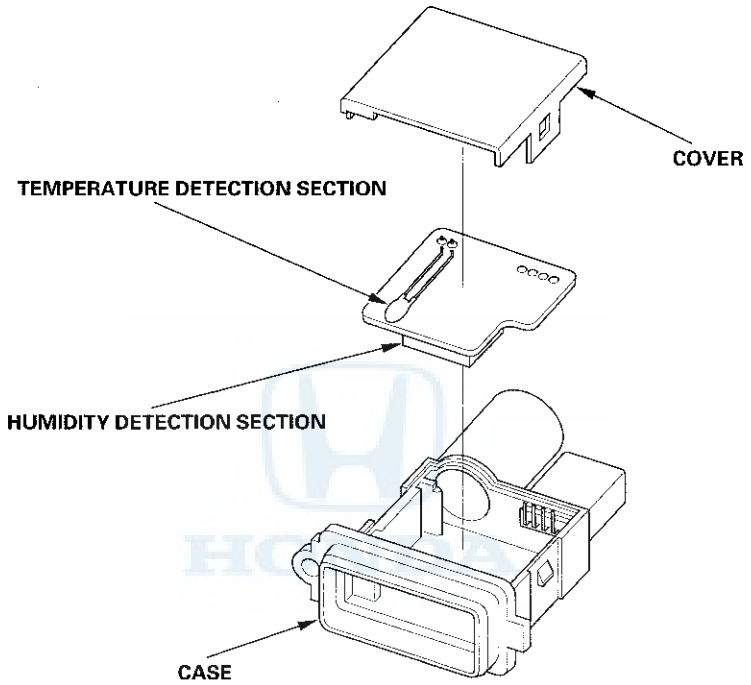

Humidity/In-car Temperature Sensor Quality

The resistance of the humidity sensor changes by the adsorption and the evaporation of moisture. The resistance change of humidity sensor changes the output voltage.

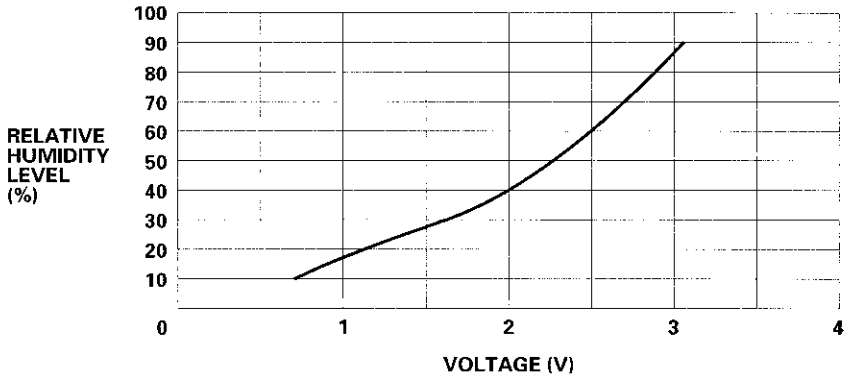

A/C Pressure Sensor

The A/C pressure sensor converts A/C pressure into electrical signals to the PCM.

A/C System Pressure*	Sensor Output Voltage (V out)	System Operation
Abnormally low pressure: Below 196 kPa (2.0 kgf/cm², 28 psi)	Below 0.685 V	The PCM disengages the compressor clutch. The radiator and condenser fans operate based on engine coolant temperature.
Normal operating pressure: • Above 195 kPa (2.0 kgf/cm², 28 psi) • Below 1,470 kPa (15.0 kgf/cm², 213 psi)	0.686 V to 1.944 V	The PCM cycles the compressor clutch based on cooling demand. The radiator and condenser fans operate at low speed unless the engine coolant temperature exceeds 206 °F
High operating pressure: • Above 1,470 kPa (15.0 kgf/cm², 213 psi) • Below 3,138 kPa (32 kgf/cm², 455 psi)	1.945 V to 4.575 V	The PCM cycles the compressor clutch based on cooling demand. The radiator and condenser fans operate at high speed.
Abnormally high pressure: More than 3,138 kPa (32 kgf/cm², 455 psi)	Above 4.575 V	The PCM disengages the compressor clutch. The radiator and condenser fans operate based on engine coolant temperature.

* : The A/C system pressure can be monitored in the HDS PGM-FI Data List

The response of the A/C pressure sensor is shown in the graph.

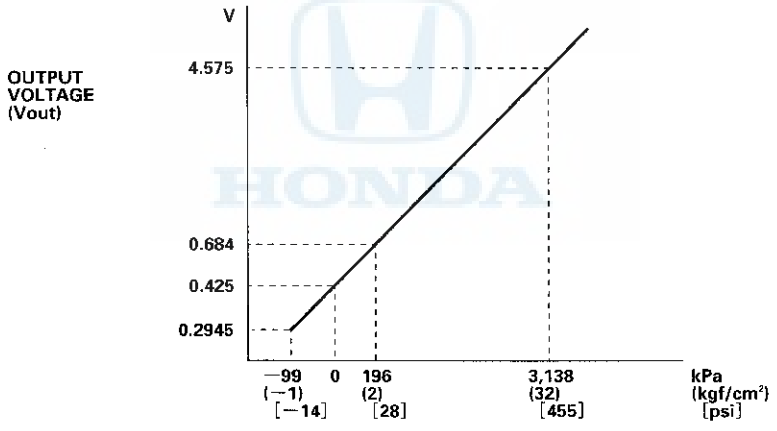

A/C PRESSURE

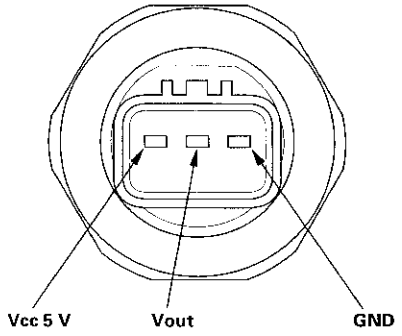

(cont'd)

System Description (cont'd)

Climate Control Door Positions

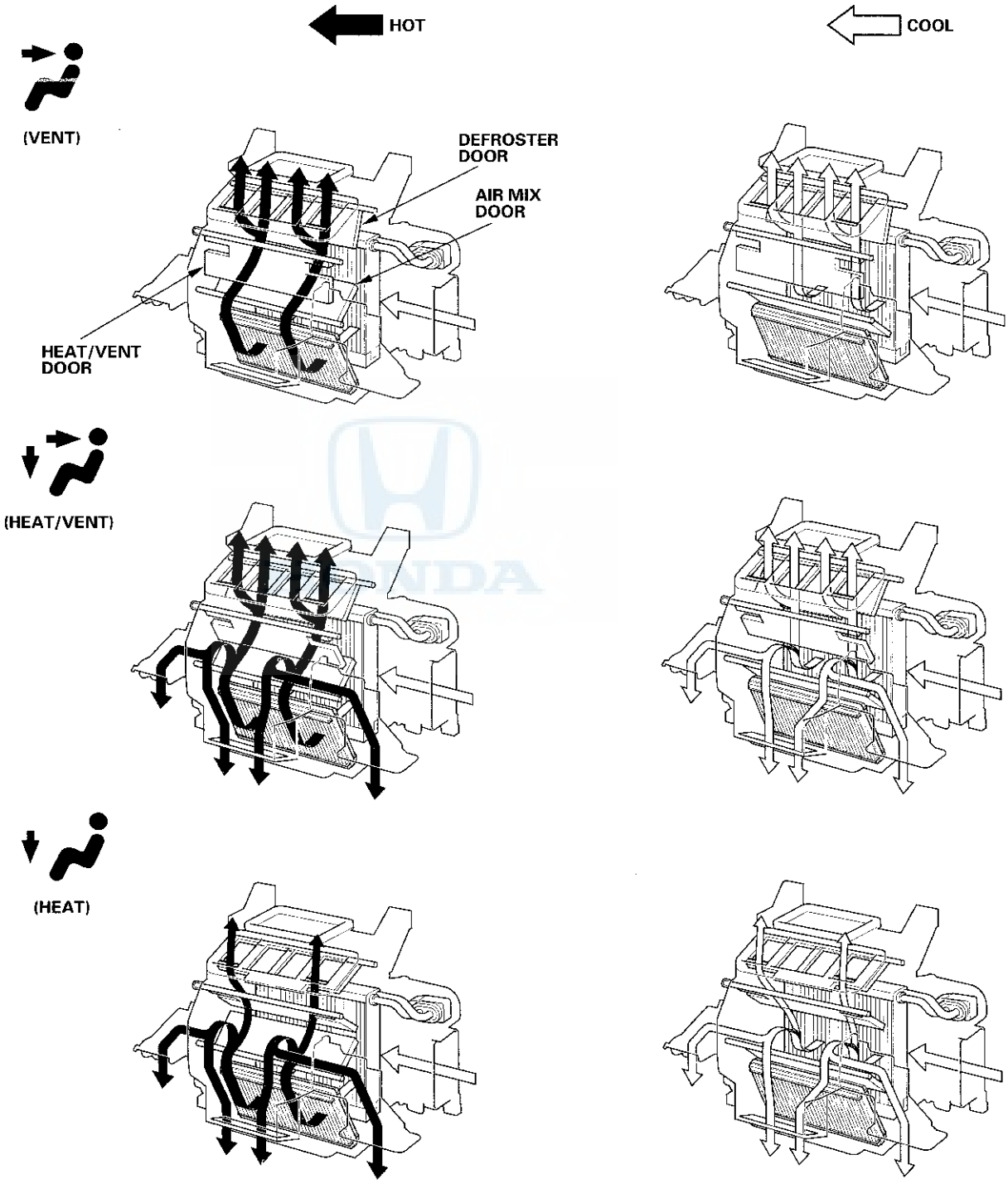

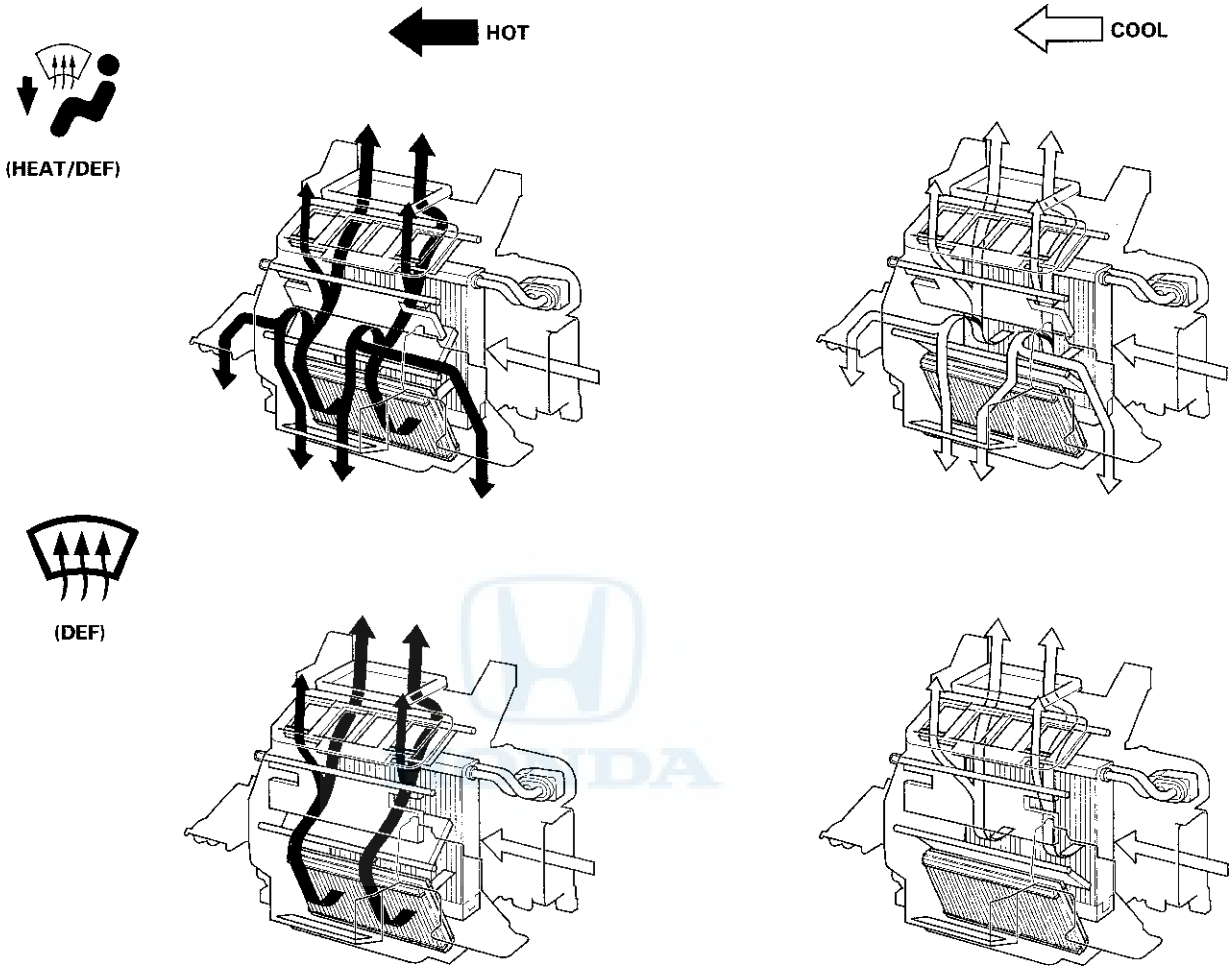

(cont'd)

System Description (cont'd)

Climate Control Unit Inputs and Outputs

CLIMATE CONTROL UNIT CONNECTOR A (32P)

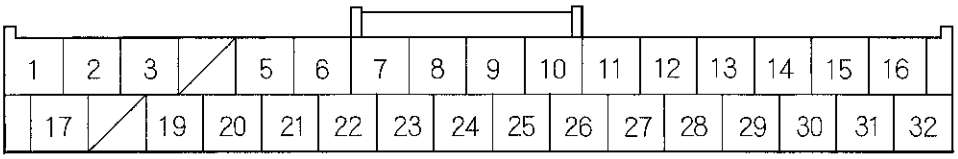

Wire side of female terminals

Cavity	Wire color	Terminal name	Description	Signal
1	GRY	ILL +	Power source for illumination	With lighting switch ON: battery voltage
2	BRN	RrDEF Ry	Signal for rear window deffoger relay	With ignition switch ON (II) and defogger ON: about 0 V With ignition switch ON (II) and defogger OFF: battery voltage
3	LT GRN	IG2	IG2 power source	With ignition switch ON (II): battery voltage
5	BLK	GND	Ground for climate control unit (G504)	Less than 0.5 V at all times
6	RED	ACS	Outputs A/C request signal to PCM	With ignition switch ON (II) and A/C request OFF: battery voltage. When A/C request switches ON, voltage changes to about 0 V.
7	BLK	S5V	Sensor 5 V output	With ignition switch ON (II): about 5 V
8	BRN	Teva	Detects evaporator temperature sensor signal	With ignition switch ON (II): between 1.0 V and 4.0 V depending on evaporator temperature. About 2.5 V at 72 °F (22 °C).
9	LT BLU	M-COOL	Drives air mix control motor to COOL	With ignition switch ON (II) and air mix control motor moving to COOL: battery voltage
10	WHT	M-VENT	Drives mode control motor to VENT	With ignition switch ON (II) and mode control motor moving to VENT: battery voltage
11	PNK	M-HOT	Drives air mix control motor to HOT	With ignition switch ON (II) and air mix control motor moving to HOT: battery voltage
12	GRN	M-DEF	Drives mode control motor to DEF	With ignition switch ON (II) and mode control motor moving to DEF: battery voltage
13	YEL	BLW-G	Voltage output of power transistor gate	With ignition switch ON (II) and blower OFF: 0 V. Voltage increases as blower speed increases
14	BLU	BLW-V	Feedback signal of power transistor drain voltage	With ignition switch ON (II) and blower OFF: between 5 V and 12 V. Voltage decreases as blower speed increases
15	ORN	REC	Drives recirculation control motor to REC	With ignition switch ON (II) and recirculation control motor moving to REC: about 0 V
16	PUR	FRS	Drives recirculation control motor to FRESH	With ignition switch ON (II) and recirculation control motor moving to FRESH: about 0 V
17	RED	ILL −	Ground for illumination	With combination light switch ON: voltage decreases as dash lights brightness increases
19	RED	S-COM	Sensor ground	Less than 0.5 V at all times
20	BLU	MODE 4	Input for mode motor signal 4	With ignition switch ON (II): about 5 V or about 0 V, depending upon mode

Cavity	Wire color	Terminal name	Description	Signal
21	PUR	MODE 3	Input for mode motor signal 3	With ignition switch ON (II): about 5 V or about 0 V, depending upon mode
22	LT GRN	MODE 2	Input for mode motor signal 2	With ignition switch ON (II): about 5 V or about 0 V, depending upon mode
23	ORN	MODE 1	Input for mode motor signal 1	With ignition switch ON (II): about 5 V or about 0 V, depending upon mode
24	PUR	Tsun	Detects sunlight sensor signal	With ignition switch ON (II) and sunlight sensor out of direct sunlight: 3.6 V or more With ignition switch ON (II) and sunlight sensor in direct sunlight: 3.5 V or less
25	BLU	Tam	Detects outside air temperature sensor signal	With ignition switch ON (II): about 1.0—4.0 V (depending on outside air temperature)
26	LT BLU	Tr	Detects in-car temperature sensor signal	With ignition switch ON (II): about 1.0—4.0 V (depending on in-car temperature)
27	GRY	AMD-P	Detects air mix control motor potentiometer signal	With ignition switch ON (II) and air mix door at HOT: about 4.5 V With ignition switch ON (II) and air mix door at COOL: about 1.5 V
28*	RED	AC SO	SO for navigation communication (A/C side receiving)	With ignition switch ON (II): pulses (about 2.5 V)
29*	BLU	AC CLK	CLK for navigation communication	With ignition switch ON (II): pulses (about 2.5 V)
30*	YEL	AC SI	SI for navigation communication (A/C side transmission)	With ignition switch ON (II): pulses (about 2.5 V)
31	YEL	RFD-P	Detects recirculation control motor potentiometer signal	With ignition switch ON (II): about 0.5—4.5 V (depending on recirculation control motor position)
32	PNK	B-CAN	CAN communication	With ignition switch ON (II): pulses (about 2.5 V)

*: With navigation

Climate Control Unit Inputs and Outputs

CLIMATE CONTROL UNIT CONNECTOR B (16P)

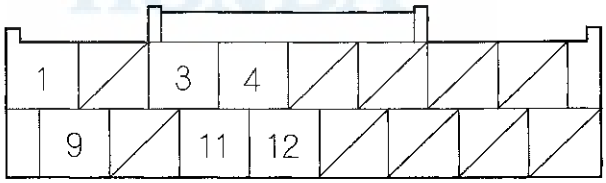

Wire side of female terminals

Cavity	Wire color	Terminal name	Description	Signal
1	YEL	HUM	Detects humidity sensor signal	With ignition switch ON (II): about 0.5 V to 3.0 V (depending upon humidity)
3	ORN	AC TW	Detects heater core temperature sensor signal	With ignition switch ON (II): about 1.0—4.0 V (depending on heater core temperature)
4	ORN	EWP V	Detects auxiliary electric water pump signal	With ignition switch ON (II) and electric water pump relay OFF: 0 V With ignition switch ON (II) and electric water pump relay ON: battery voltage
9	BRN	EWP	Drives auxiliary electric water pump relay	With ignition switch ON (II) and electric water pump relay OFF: battery voltage With ignition switch ON (II) and electric water pump relay ON: about 0 V
11	GRN	TH IN	Detects thermal protector signal	With ignition switch ON (II) and thermal protector closed: battery voltage With ignition switch ON (II) and thermal protector open: about 0 V
12	BRN	TH OUT	Outputs thermal protector signal	With ignition switch ON (II): battery voltage

Circuit Diagram

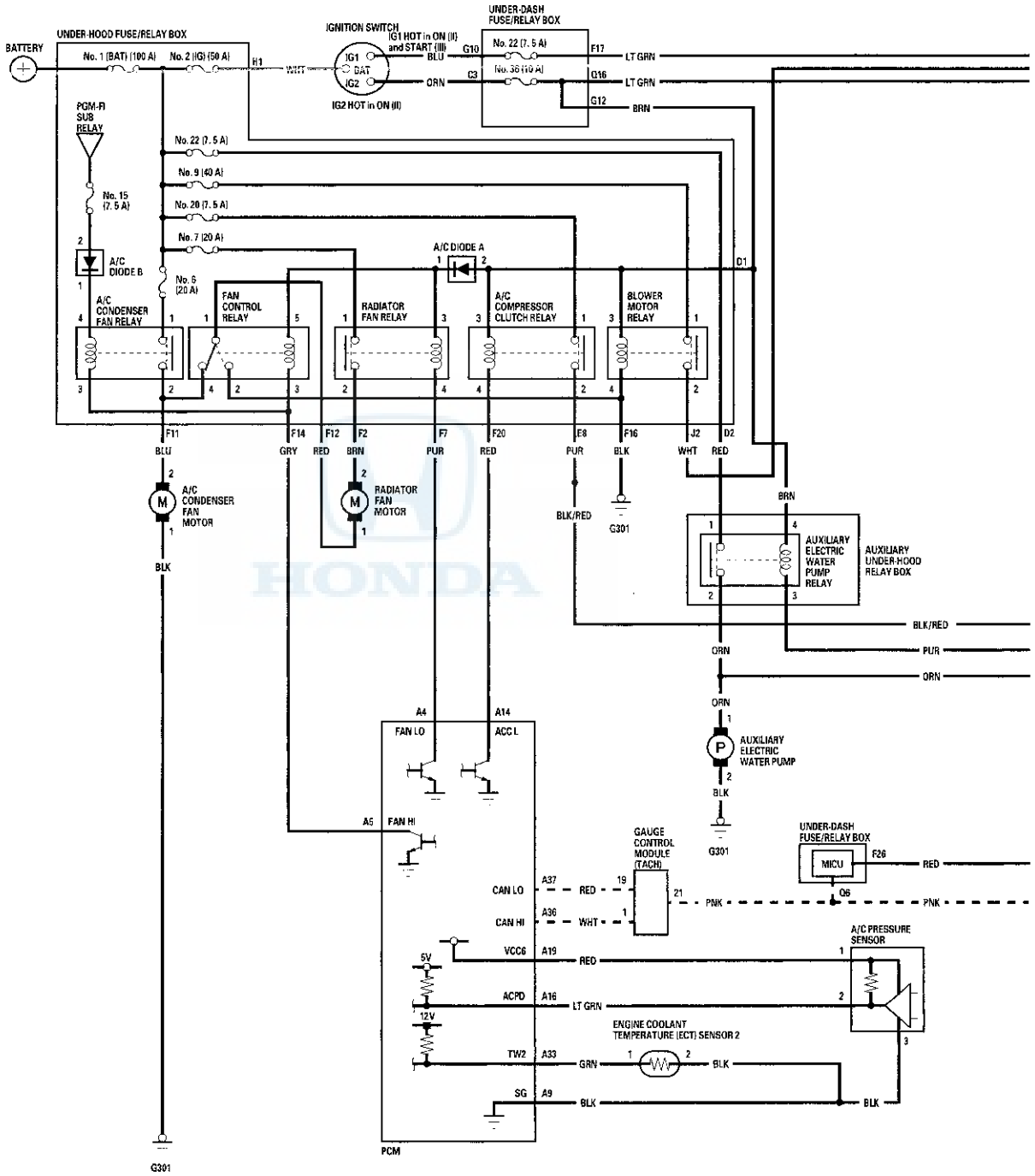

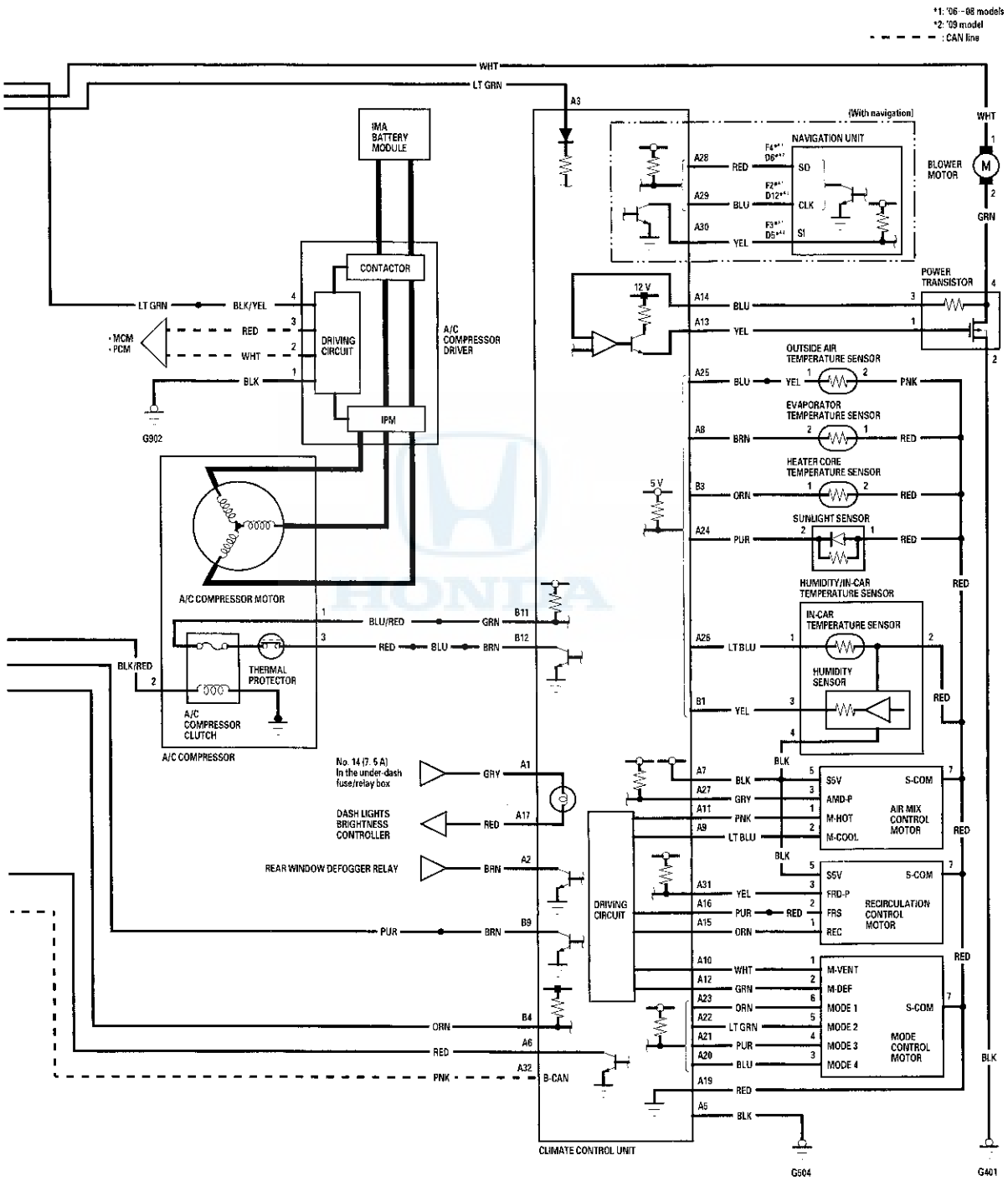
*1: '06 - '08 models
*2: '09 model
: CAN line
WHT
LT GRN
A3
IMA BATTERY MODULE
CONTACTOR
DRIVING CIRCUIT
IPM
A/C COMPRESSOR DRIVER
*MCM
*PCM
BLK/YEL
RED
WHT
BLK
G902
A/C COMPRESSOR MOTOR
BLU/RED
GRN
B11
RED
BLU
BRN
B12
BLK/RED
THERMAL PROTECTOR
A/C COMPRESSOR CLUTCH
A/C COMPRESSOR
No. 14 (7.5 A) In the under-dash fuse/relay box
GRY
A1
DASH LIGHTS BRIGHTNESS CONTROLLER
RED
A17
REAR WINDOW DEFOGGER RELAY
BRN
A2
PUR
BRN
B9
ORN
B4
RED
A6
PNK
A32
B-CAN
DRIVING CIRCUIT
CLIMATE CONTROL UNIT
[With navigation]
NAVIGATION UNIT
A28
RED
SD
A29
BLU
CLK
A30
YEL
SI
BLOWER MOTOR
M
GRN
12 V
POWER TRANSISTOR
A14
BLU
A13
YEL
OUTSIDE AIR TEMPERATURE SENSOR
A25
BLU
YEL
PNK
EVAPORATOR TEMPERATURE SENSOR
A8
BRN
RED
HEATER CORE TEMPERATURE SENSOR
5 V
B3
ORN
RED
SUNLIGHT SENSOR
A24
PUR
RED
HUMIDITY/IN-CAR TEMPERATURE SENSOR
IN-CAR TEMPERATURE SENSOR
A26
LT BLU
HUMIDITY SENSOR
B1
YEL
RED
BLK
A7
BLK
A27
GRY
A11
PNK
A9
LT BLU
S5V
A/MD-P
M-HOT
M-COOL
S-COM
AIR MIX CONTROL MOTOR
A31
YEL
A16
PUR
RED
A15
ORN
S5V
FRD-P
FRS
REC
S-COM
RECIRCULATION CONTROL MOTOR
A10
WHT
A12
GRN
A23
ORN
A22
LT GRN
A21
PUR
A20
BLU
M-VENT
M-DEF
MODE 1
MODE 2
MODE 3
MODE 4
S-COM
MODE CONTROL MOTOR
A19
RED
A5
BLK
G504
G401

DTC Troubleshooting

DTC B1202 or DTC indicator C and AUTO: Climate Control Unit Internal Error

NOTE: Check the battery condition (see page 22-61) and the charging system (see page 12-179).

1. Clear the DTC with the HDS.
2. Turn the ignition switch to LOCK (0), and then turn to ON (II).
3. Do the self-diagnostic with the HDS (see page 21-11) or climate control unit (see page 21-12).
4. Check for DTCs.

   Is DTC B1202 or C and AUTO indicated?

   YES—The climate control unit is faulty, replace the climate control unit. ■

   NO—Intermittent failure, the climate control unit is OK at this time. ■

DTC B1205, DTC indicator J and AUTO or L and AUTO: Climate Control Unit Lost Communication with Gauge Control Module (TACH) (VSP/NE message)

DTC B1206 or DTC indicator F and AUTO: Climate Control Unit Lost Communication with Gauge Control Module (TACH) (ECT message)

DTC B1207 or DTC indicator D and AUTO: Climate Control Unit Lost Communication with Gauge Control Module (TACH) (ILLUMI message)

DTC B1209: Climate Control Unit Lost Communication with Gauge Control Module (TACH) (ILLUMI message)

1. Clear the DTC with the HDS.
2. Turn the ignition switch to LOCK (0), and then turn to ON (II).
3. Do the self-diagnostic with the HDS (see page 21-11) or climate control unit (see page 21-12).
4. Check the DTCs.

   Is DTC B1205, J and AUTO or L and AUTO, and/or DTC B1206 or F and AUTO, and/or DTC B1207 or D and AUTO, and/or DTC B1209 indicated?

   YES—Go to step 5.

   NO—Intermittent failure. Check for loose wires or poor connections on the gauge control module (TACH) and the climate control unit. ■

5. Select UNIT INFORMATION in the BODY ELECTRICAL menu.
6. Select CONNECTED UNIT in the UNIT INFORMATION menu.

   Is gauge control module detected?

   YES—Substitute a known-good climate control unit, and recheck. If the symptom/indication goes away, replace the original climate control unit. ■

   NO—Go to step 7.

7. Disconnect under-dash fuse/relay box connector Q (16P).

8. Disconnect the gauge control module (TACH) 36P connector.

9. Check for continuity between under-dash fuse/relay box connector Q (16P) terminal No. 6 and the gauge control module (TACH) 36P connector terminal No. 21.

UNDER-DASH FUSE/RELAY BOX CONNECTOR Q (16P)
Wire side of female terminals

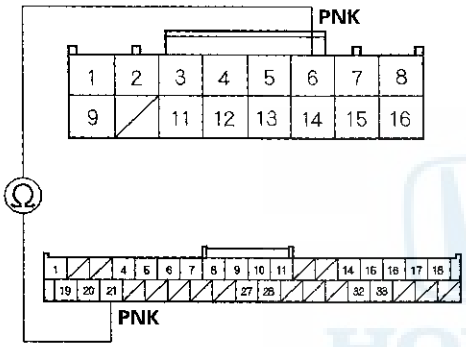

GAUGE CONTROL MODULE (TACH) 36P CONNECTOR
Wire side of female terminals

Is there continuity?

YES—Go to the MICU input test (see page 22-106). ■

NO—Repair open in the wire between the MICU and the gauge control module (TACH). ■

DTC B1220 or DTC indicator E and AUTO: A Short in the Recirculation Control Motor Circuit

1. Clear the DTC with the HDS.

2. Turn the ignition switch to LOCK (0), and then turn to ON (II).

3. Do the self-diagnostic with the HDS (see page 21-11) or climate control unit (see page 21-12).

4. Check for DTCs.

   Is DTC B1220 or E and AUTO indicated?

   YES—Go to step 5.

   NO—Intermittent failure. Check for loose wires or poor connections on the recirculation control motor circuit. ■

5. Turn the ignition switch to LOCK (0).

6. Test the recirculation control motor (see page 21-97).

   Is the recirculation control motor OK?

   YES—Go to step 7.

   NO—Replace the recirculation control motor (see page 21-97). ■

7. Disconnect the recirculation control motor 7P connector.

8. Disconnect climate control unit connector A (32P).

(cont'd)

DTC Troubleshooting (cont'd)

9. Check for continuity between body ground and climate control unit connector A (32P) terminals No. 7 and No. 31 individually.

CLIMATE CONTROL UNIT CONNECTOR A (32P)

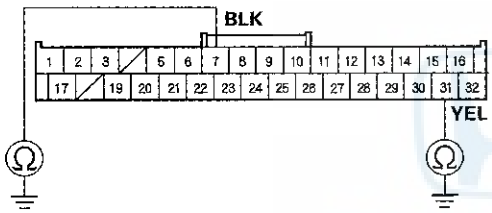

Wire side of female terminals

Is there continuity?

YES—Repair short to body ground in the wire(s) between the climate control unit and the recirculation control motor. ■

NO—Go to step 10.

10. Check for continuity between climate control unit connector A (32P) terminals as follows.

From terminal	To terminals
7	19, 31
19	31

Is there continuity between any of the terminals?

YES—Repair the short in the wires. ■

NO—Go to step 11.

11. Turn the ignition switch to ON (II), and measure the same terminals for voltage between the terminals and body ground.

CLIMATE CONTROL UNIT CONNECTOR A (32P)

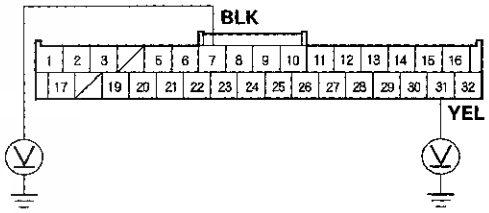

Wire side of female terminals

Is there any voltage?

YES—Repair short to power in the wire(s) between the climate control unit and the recirculation control motor. This short may also damage the climate control unit. Repair the short to power before replacing the climate control unit. ■

NO—Substitute a known-good climate control unit, and recheck. If the symptom/indication goes away, replace the original climate control unit. ■

DTC B1225 or DTC indicator A: An Open in the In-car Temperature Sensor Circuit

1. Clear the DTC with the HDS.

2. Turn the ignition switch to LOCK (0), and then turn to ON (II).

3. Do the self-diagnostic with the HDS (see page 21-11) or climate control unit (see page 21-12).

4. Check for DTCs.

   Is DTC B1225 or A indicated?

   YES—Go to step 5.

   NO—Intermittent failure. Check for loose wires or poor connections on the in-car temperature sensor circuit. ■

5. Turn the ignition switch to LOCK (0).

6. Remove the humidity/in-car temperature sensor (see page 21-90), and test it (see page 21-89).

   Is the in-car temperature sensor OK?

   YES—Go to step 7.

   NO—Replace the humidity/in-car temperature sensor. ■

7. Disconnect climate control unit connector A (32P).

8. Check for continuity between climate control unit connector A (32P) terminal No. 26 and the humidity/in-car temperature sensor 4P connector terminal No. 1.

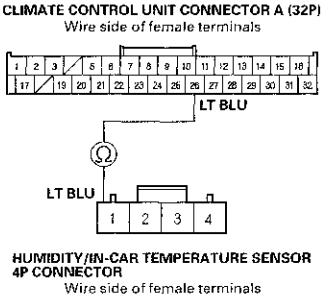

   Is there continuity?

   YES—Go to step 9.

   NO—Repair open in the wire between the climate control unit and the humidity/in-car temperature sensor. ■

9. Check for continuity between climate control unit connector A (32P) terminal No. 19 and the humidity/in-car temperature sensor 4P connector terminal No. 2.

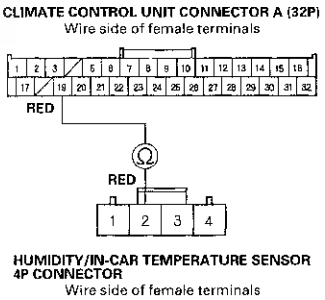

   Is there continuity?

   YES—Check for loose wires or poor connections at climate control unit connector A (32P) and at the humidity/in-car temperature sensor 4P connector. If the connections are good, substitute a known-good climate control unit, and recheck. If the symptom/indication goes away, replace the original climate control unit. ■

   NO—Repair open in the wire between the climate control unit and the humidity/in-car temperature sensor. ■

DTC Troubleshooting (cont'd)

DTC B1226 or DTC indicator B: A Short in the In-car Temperature Sensor Circuit

1. Clear the DTC with the HDS.
2. Turn the ignition switch to LOCK (0), and then turn to ON (II).
3. Do the self-diagnostic with the HDS (see page 21-11) or climate control unit (see page 21-12).
4. Check for DTCs.

   Is DTC B1226 or B indicated?

   YES—Go to step 5.

   NO—Intermittent failure. Check for loose wires or poor connections on the in-car temperature sensor circuit. ■

5. Turn the ignition switch to LOCK (0).
6. Remove the humidity/in-car temperature sensor (see page 21-90), and test it (see page 21-89).

   Is the in-car temperature sensor OK?

   YES—Go to step 7.

   NO—Replace the humidity/in-car temperature sensor. ■

7. Disconnect climate control unit connector A (32P).
8. Check for continuity between body ground and climate control unit connector A (32P) terminal No. 26.

CLIMATE CONTROL UNIT CONNECTOR A (32P)

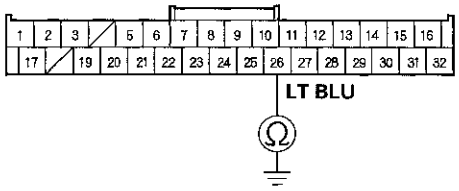

Wire side of female terminals

Is there continuity?

YES—Repair short to body ground in the wire between the climate control unit and the humidity/in-car temperature sensor. ■

NO—Go to step 9.

9. Check for continuity between climate control unit connector A (32P) terminals No. 19 and No. 26.

CLIMATE CONTROL UNIT CONNECTOR A (32P)

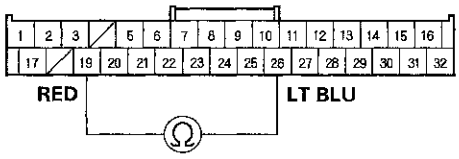

Wire side of female terminals

Is there continuity?

YES—Repair short in the wires between the climate control unit and the humidity/in-car temperature sensor. ■

NO—Substitute a known-good climate control unit, and recheck. If the symptom/indication goes away, replace the original climate control unit. ■

DTC B1227 or DTC indicator C: An Open in the Outside Air Temperature Sensor Circuit

1. Clear the DTC with the HDS.

2. Turn the ignition switch to LOCK (0), and then turn to ON (II).

3. Do the self-diagnostic with the HDS (see page 21-11) or climate control unit (see page 21-12).

4. Check for DTCs.

   Is DTC B1227 or C indicated?

   YES—Go to step 5.

   NO—Intermittent failure. Check for loose wires or poor connections on the outside air temperature sensor circuit. ■

5. Turn the ignition switch to LOCK (0).

6. Remove the outside air temperature sensor (see page 21-91), and test it (see page 21-91).

   Is the outside air temperature sensor OK?

   YES—Go to step 7.

   NO—Replace the outside air temperature sensor. ■

7. Disconnect climate control unit connector A (32P).

8. Check for continuity between climate control unit connector A (32P) terminal No. 25 and the outside air temperature sensor 2P connector terminal No. 1.

CLIMATE CONTROL UNIT CONNECTOR A (32P)
Wire side of female terminals

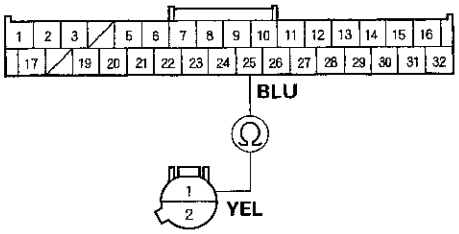

OUTSIDE AIR TEMPERATURE SENSOR 2P CONNECTOR
Wire side of female terminals

Is there continuity?

YES—Go to step 9.

NO—Repair open in the wire between the climate control unit and the outside air temperature sensor. ■

(cont'd)

DTC Troubleshooting (cont'd)

9. Check for continuity between climate control unit connector A (32P) terminal No. 19 and the outside air temperature sensor 2P connector terminal No. 2.

CLIMATE CONTROL UNIT CONNECTOR A (32P)
Wire side of female terminals

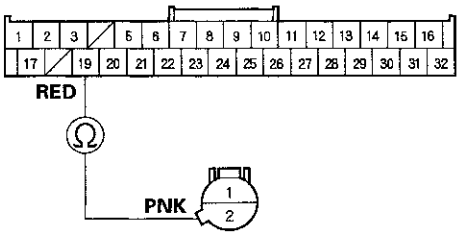

OUTSIDE AIR TEMPERATURE SENSOR 2P CONNECTOR
Wire side of female terminals

Is there continuity?

YES—Check for loose wires or poor connections at climate control unit connector A (32P) and at the outside air temperature sensor 2P connector. If the connections are good, substitute a known-good climate control unit, and recheck. If the symptom/indication goes away, replace the original climate control unit. ■

NO—Repair open in the wire between the climate control unit and the outside air temperature sensor. ■

DTC B1228 or DTC indicator D: A Short in the Outside Air Temperature Sensor Circuit

1. Clear the DTC with the HDS.
2. Turn the ignition switch to LOCK (0), and then turn to ON (II).
3. Do the self-diagnostic with the HDS (see page 21-11) or climate control unit (see page 21-12).
4. Check for DTCs.

   Is DTC B1228 or D indicated?

   YES—Go to step 5.

   NO—Intermittent failure. Check for loose wires or poor connections on the outside air temperature circuit. ■

5. Turn the ignition switch to LOCK (0).
6. Remove the outside air temperature sensor (see page 21-91), and test it (see page 21-91).

   Is the outside air temperature sensor OK?

   YES—Go to step 7.

   NO—Replace the outside air temperature sensor. ■

7. Disconnect climate control unit connector A (32P).

8. Check for continuity between body ground and climate control unit connector A (32P) terminal No. 25.

CLIMATE CONTROL UNIT CONNECTOR A (32P)

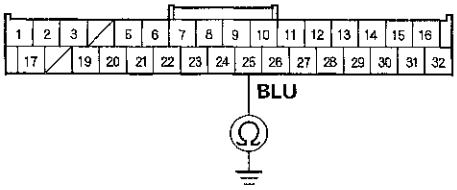

Wire side of female terminals

Is there continuity?

YES—Repair short to body ground in the wire between the climate control unit and the outside air temperature sensor. ■

NO—Go to step 9.

9. Check for continuity between climate control unit connector A (32P) terminals No. 19 and No. 25.

CLIMATE CONTROL UNIT CONNECTOR A (32P)

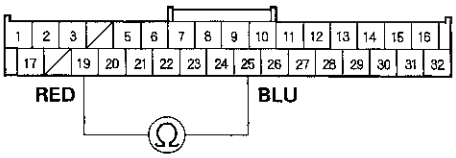

Wire side of female terminals

Is there continuity?

YES—Repair short in the wires between the climate control unit and the outside air temperature sensor. ■

NO—Substitute a known-good climate control unit, and recheck. If the symptom/indication goes away, replace the original climate control unit. ■

DTC B1229 or DTC indicator E: An Open in the Sunlight Sensor Circuit

1. Clear the DTC with the HDS.

2. Turn the ignition switch to LOCK (0), and then turn to ON (II).

3. Do the self-diagnostic with the HDS (see page 21-11) or climate control unit (see page 21-12).

4. Check for DTCs.

Is DTC B1229 or E indicated?

YES—Go to step 5.

NO—Intermittent failure. Check for loose wires or poor connections on the sunlight sensor circuit. ■

5. Turn the ignition switch to LOCK (0).

6. Disconnect the sunlight sensor 2P connector.

7. Disconnect climate control unit connector A (32P).

8. Check for continuity between climate control unit connector A (32P) terminal No. 24 and the sunlight sensor 2P connector terminal No. 2.

CLIMATE CONTROL UNIT CONNECTOR A (32P)
Wire side of female terminals

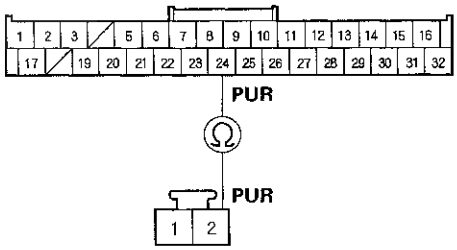

SUNLIGHT SENSOR 2P CONNECTOR
Wire side of female terminals

Is there continuity?

YES—Go to step 9.

NO—Repair open in the wire between the climate control unit and the sunlight sensor. ■

(cont'd)

DTC Troubleshooting (cont'd)

9. Check for continuity between climate control unit connector A (32P) terminal No. 19 and the sunlight sensor 2P connector terminal No. 1.

CLIMATE CONTROL UNIT CONNECTOR A (32P)
Wire side of female terminals

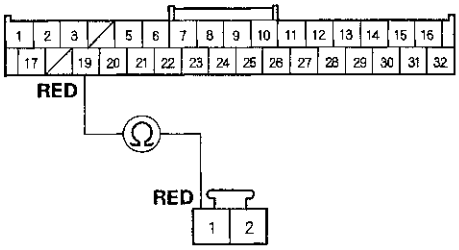

SUNLIGHT SENSOR 2P CONNECTOR
Wire side of female terminals

Is there continuity?

YES—Go to step 10.

NO—Repair open in the wire between the climate control unit and the sunlight sensor. ■

10. Reconnect the sunlight sensor 2P connector.

11. Reconnect climate control unit connector A (32P).

12. Test the sunlight sensor (see page 21-92).

Is the sunlight sensor OK?

YES—Check for loose wires or poor connections at climate control unit connector A (32P) and at the sunlight sensor 2P connector. If the connections are good, substitute a known-good climate control unit, and recheck. If the symptom/indication goes away, replace the original climate control unit. ■

NO—Replace the sunlight sensor (see page 21-92). ■

DTC B1230 or DTC indicator F: A Short in the Sunlight Sensor Circuit

1. Clear the DTC with the HDS.

2. Turn the ignition switch to LOCK (0), and then turn to ON (II).

3. Do the self-diagnostic with the HDS (see page 21-11) or climate control unit (see page 21-12).

4. Check for DTCs.

Is DTC B1230 or F indicated?

YES—Go to step 5.

NO—Intermittent failure. Check for loose wires or poor connections on the sunlight sensor circuit. ■

5. Turn the ignition switch to LOCK (0).

6. Disconnect the sunlight sensor 2P connector.

7. Disconnect climate control unit connector A (32P).

8. Check for continuity between body ground and climate control unit connector A (32P) terminal No. 24.

CLIMATE CONTROL UNIT CONNECTOR A (32P)

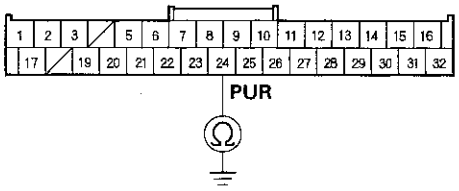

Wire side of female terminals

Is there continuity?

YES—Repair short to body ground in the wire between the climate control unit and the sunlight sensor. ■

NO—Go to step 9.

9. Check for continuity between climate control unit connector A (32P) terminals No. 19 and No. 24.

CLIMATE CONTROL UNIT CONNECTOR A (32P)

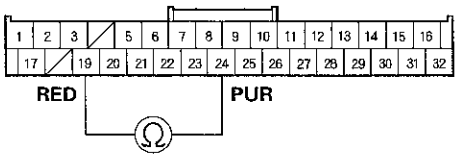

Wire side of female terminals

Is there continuity?

YES—Repair short in the wires between the climate control unit and the sunlight sensor. ■

NO—Go to step 10.

10. Reconnect the sunlight sensor 2P connector.

11. Reconnect climate control unit connector A (32P).

12. Test the sunlight sensor (see page 21-92).

Is the sunlight sensor OK?

YES—Substitute a known-good climate control unit, and recheck. If the symptom/indication goes away, replace the original climate control unit. ■

NO—Replace the sunlight sensor (see page 21-92). ■

DTC B1231 or DTC indicator G: An Open in the Evaporator Temperature Sensor Circuit

1. Clear the DTC with the HDS.

2. Turn the ignition switch to LOCK (0), and then turn to ON (II).

3. Do the self-diagnostic with the HDS (see page 21-11) or climate control unit (see page 21-12).

4. Check for DTCs.

Is DTC B1231 or G indicated?

YES—Go to step 5.

NO—Intermittent failure. Check for loose wires or poor connections on the evaporator temperature sensor circuit. ■

5. Turn the ignition switch to LOCK (0).

6. Remove the evaporator temperature sensor (see page 21-101), and test it (see page 21-90).

Is the evaporator temperature sensor OK?

YES—Go to step 7.

NO—Replace the evaporator temperature sensor. ■

(cont'd)

DTC Troubleshooting (cont'd)

7. Disconnect climate control unit connector A (32P).

8. Check for continuity between climate control unit connector A (32P) terminal No. 8 and the evaporator temperature sensor 2P connector terminal No. 2.

CLIMATE CONTROL UNIT CONNECTOR A (32P)
Wire side of female terminals

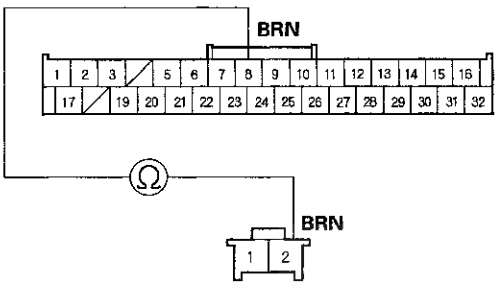

EVAPORATOR TEMPERATURE SENSOR 2P CONNECTOR
Wire side of female terminals

Is there continuity?

YES—Go to step 9.

NO—Repair open in the wire between the climate control unit and the evaporator temperature sensor. ■

9. Check for continuity between climate control unit connector A (32P) terminal No. 19 and the evaporator temperature sensor 2P connector terminal No. 1.

CLIMATE CONTROL UNIT CONNECTOR A (32P)
Wire side of female terminals

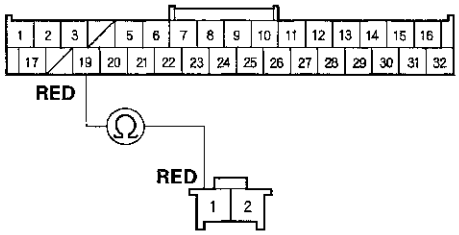

EVAPORATOR TEMPERATURE SENSOR 2P CONNECTOR
Wire side of female terminals

Is there continuity?

YES—Check for loose wires or poor connections at climate control unit connector A (32P) and at the evaporator temperature sensor 2P connector. If the connections are good, substitute a known-good climate control unit, and recheck. If the symptom/indication goes away, replace the original climate control unit. ■

NO—Repair open in the wire between the climate control unit and the evaporator temperature sensor. ■

DTC B1232 or DTC indicator H: A Short in the Evaporator Temperature Sensor Circuit

1. Clear the DTC with the HDS.

2. Turn the ignition switch to LOCK (0), and then turn to ON (II).

3. Do the self-diagnostic with the HDS (see page 21-11) or climate control unit (see page 21-12).

4. Check for DTCs.

   Is DTC B1232 or H indicated?

   YES—Go to step 5.

   NO—Intermittent failure. Check for loose wires or poor connections on the evaporator temperature circuit. ■

5. Turn the ignition switch to LOCK (0).

6. Remove the evaporator temperature sensor (see page 21-101), and test it (see page 21-90).

   Is the evaporator temperature sensor OK?

   YES—Go to step 7.

   NO—Replace the evaporator temperature sensor. ■

7. Disconnect climate control unit connector A (32P).

8. Check for continuity between body ground and climate control unit connector A (32P) terminal No. 8.

CLIMATE CONTROL UNIT CONNECTOR A (32P)

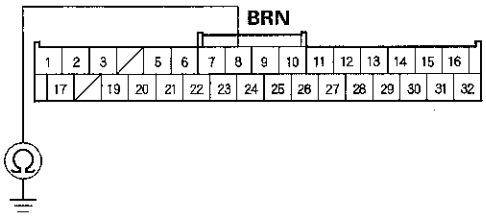

Wire side of female terminals

   Is there continuity?

   YES—Repair short to body ground in the wire between the climate control unit and the evaporator temperature sensor. ■

   NO—Go to step 9.

9. Check for continuity between climate control unit connector A (32P) terminals No. 8 and No. 19.

CLIMATE CONTROL UNIT CONNECTOR A (32P)

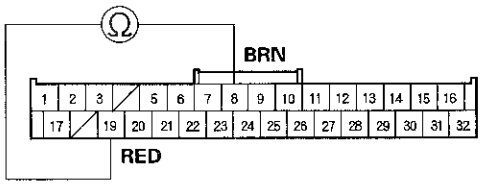

Wire side of female terminals

   Is there continuity?

   YES—Repair short in the wires between the climate control unit and the evaporator temperature sensor. ■

   NO—Substitute a known-good climate control unit, and recheck. If the symptom/indication goes away, replace the original climate control unit. ■

DTC Troubleshooting (cont'd)

DTC B1233 or DTC indicator J: An Open in the Air Mix Control Motor Circuit

1. Clear the DTC with the HDS.
2. Turn the ignition switch to LOCK (0), and then turn to ON (II).
3. Do the self-diagnostic with the HDS (see page 21-11) or climate control unit (see page 21-12).
4. Check for DTCs.

   Is DTC B1233 or J indicated?

   YES—Go to step 5.

   NO—Intermittent failure. Check for loose wires or poor connections on the air mix control motor circuit. ■
5. Turn the ignition switch to LOCK (0).
6. Test the air mix control motor (see page 21-95).

   Is the air mix control motor OK?

   YES—Go to step 7.

   NO—Replace the air mix control motor (see page 21-95). ■
7. Disconnect the air mix control motor 7P connector.
8. Disconnect climate control unit connector A (32P).
9. Check for continuity between the following terminals of climate control unit connector A (32P) and the air mix control motor 7P connector.

32P:	7P:
No. 7	No. 5
No. 19	No. 7
No. 27	No. 3

CLIMATE CONTROL UNIT CONNECTOR A (32P)
Wire side of female terminals

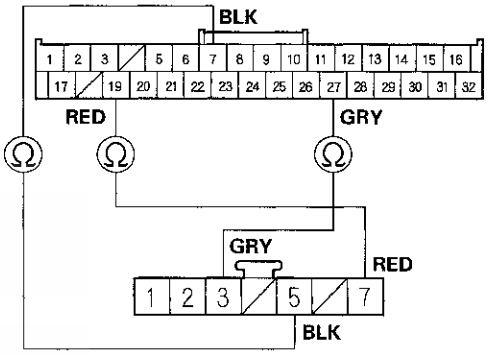

AIR MIX CONTROL MOTOR 7P CONNECTOR
Wire side of female terminals

Is there continuity?

YES—Check for loose wires or poor connections at climate control unit connector A (32P) and at the air mix control motor 7P connector. If the connections are good, substitute a known-good climate control unit and recheck. If the symptom/indication goes away, replace the original climate control unit. ■

NO—Repair open in the wire(s) between the climate control unit and the air mix control motor. ■

DTC B1234 or DTC indicator K: A Short in the Air Mix Control Motor Circuit

1. Clear the DTC with the HDS.

2. Turn the ignition switch to LOCK (0), and then turn to ON (II).

3. Do the self-diagnostic with the HDS (see page 21-11) or climate control unit (see page 21-12).

4. Check for DTCs.

   Is DTC B1234 or K indicated?

   YES—Go to step 5.

   NO—Intermittent failure. Check for loose wires or poor connections on the air mix control motor circuit. ■

5. Turn the ignition switch to LOCK (0).

6. Test the air mix control motor (see page 21-95).

   Is the air mix control motor OK?

   YES—Go to step 7.

   NO—Replace the air mix control motor (see page 21-95). ■

7. Disconnect the air mix control motor 7P connector.

8. Disconnect climate control unit connector A (32P).

9. Check for continuity between body ground and climate control unit connector A (32P) terminals No. 7 and No. 27 individually.

CLIMATE CONTROL UNIT CONNECTOR A (32P)

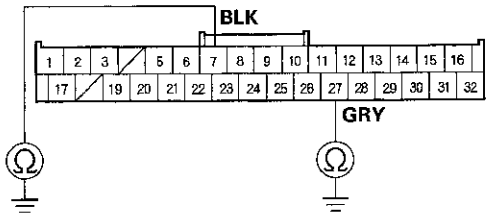

Wire side of female terminals

Is there continuity?

YES—Repair any short to body ground in the wire(s) between the climate control unit and the air mix control motor. ■

NO—Go to step 10.

10. Check for continuity between climate control unit connector A (32P) terminals as follows.

From terminal	To terminals
7	19, 27
19	27

Is there continuity between any of the terminals?

YES—Repair the short in the wires. ■

NO—Go to step 11.

(cont'd)

DTC Troubleshooting (cont'd)

11. Turn the ignition switch to ON (II), and measure the same terminals for voltage between the terminals and body ground.

CLIMATE CONTROL UNIT CONNECTOR A (32P)

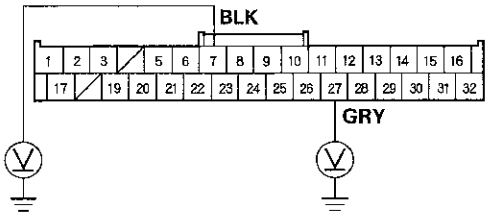

Wire side of female terminals

Is there any voltage?

YES—Repair short to power in the wire(s) between the climate control unit and the air mix control motor. This short may also damage the climate control unit. Repair the short to power before replacing the climate control unit. ■

NO—Substitute a known-good climate control unit, and recheck. If the symptom/indication goes away, replace the original climate control unit. ■

DTC B1235 or DTC indicator L: A Problem in the Air Mix Control Linkage, Door, or Motor

1. Clear the DTC with the HDS.
2. Turn the ignition switch to LOCK (0), and then turn to ON (II).
3. Do the self-diagnostic with the HDS (see page 21-11) or climate control unit (see page 21-12).
4. Check for DTCs.

   Is DTC B1235 or L indicated?

   YES—Go to step 5.

   NO—Intermittent failure. Check for loose wires or poor connections on the air mix control motor circuit. ■

5. Turn the ignition switch to LOCK (0).
6. Disconnect the air mix control motor 7P connector.
7. Disconnect climate control unit connector A (32P).

8. Check for continuity between the following terminals of the climate control unit connector A (32P) and the air mix control motor 7P connector.

32P:	7P:
No. 9	No. 2
No. 11	No. 1

CLIMATE CONTROL UNIT CONNECTOR A (32P)
Wire side of female terminals

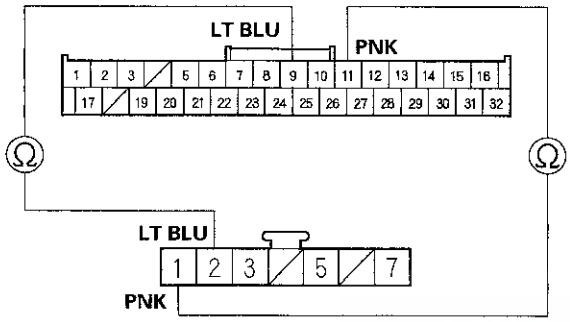

AIR MIX CONTROL MOTOR 7P CONNECTOR
Wire side of female terminals

Is there continuity?

YES—Go to step 9.

NO—Repair open in the wire(s) between the climate control unit and the air mix control motor.■

9. Check for continuity between body ground and climate control unit connector A (32P) terminals No. 9 and No. 11 individually.

CLIMATE CONTROL UNIT CONNECTOR A (32P)

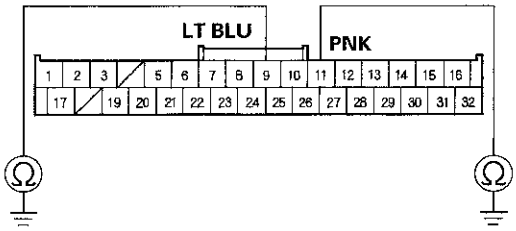

Wire side of female terminals

Is there continuity?

YES—Repair short to body ground in the wire(s) between the climate control unit and the air mix control motor.■

NO—Go to step 10.

10. Test the air mix control motor (see page 21-95).

Is the air mix control motor OK?

YES—Substitute a known-good climate control unit, and recheck. If the symptom/indication goes away, replace the original climate control unit.■

NO—Replace the air mix control motor (see page 21-95), or repair the air mix control linkage or door.■

DTC Troubleshooting (cont'd)

DTC B1239 or DTC indicator M: An Open or Short in the Mode Control Motor Circuit

1. Clear the DTC with the HDS.

2. Turn the ignition switch to LOCK (0), and then turn to ON (II).

3. Do the self-diagnostic with the HDS (see page 21-11) or climate control unit (see page 21-12).

4. Check for DTCs.

   Is DTC B1239 or M indicated?

   YES—Go to step 5.

   NO—Intermittent failure. Check for loose wires or poor connections on the mode control motor circuit. ■

5. Turn the ignition switch to LOCK (0).

6. Test the mode control motor (see page 21-96).

   Is the mode control motor OK?

   YES—Go to step 7.

   NO—Replace the mode control motor (see page 21-96). ■

7. Disconnect the mode control motor 7P connector.

8. Disconnect climate control unit connector A (32P).

9. Check for continuity between the following terminals of climate control unit connector A (32P) and the mode control motor 7P connector.

32P:	7P:
No. 19	No. 7
No. 20	No. 3
No. 21	No. 4
No. 22	No. 5
No. 23	No. 6

CLIMATE CONTROL UNIT CONNECTOR A (32P)
Wire side of female terminals

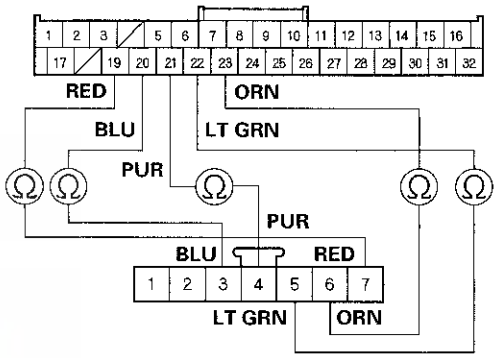

MODE CONTROL MOTOR 7P CONNECTOR
Wire side of female terminals

Is there continuity?

YES—Go to step 10.

NO—Repair open in the wire(s) between the climate control unit and the mode control motor. ■

10. Check for continuity between body ground and climate control unit connector A (32P) terminals No. 20, 21, 22, and No. 23 individually.

CLIMATE CONTROL UNIT CONNECTOR A (32P)

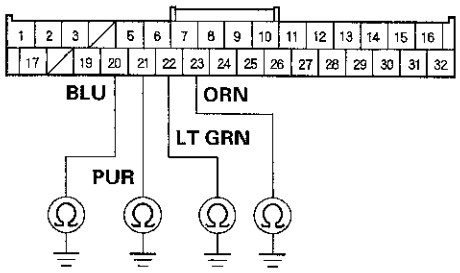

Wire side of female terminals

Is there continuity?

YES—Repair short to body ground in the wire(s) between the climate control unit and the mode control motor. ■

NO—Go to step 11.

11. Check for continuity between climate control unit connector A (32P) terminals as follows.

From terminal	To terminals
19	20, 21, 22, 23
20	21, 22, 23
21	22, 23
22	23

Is there continuity between any of the terminals?

YES—Repair the short in the wires. ■

NO—Go to step 12.

12. Turn the ignition switch to ON (II), and measure the same terminals for voltage between the terminals and body ground.

CLIMATE CONTROL UNIT CONNECTOR A (32P)

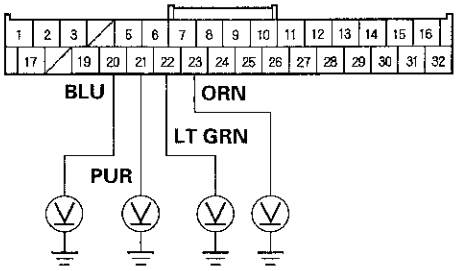

Wire side of female terminals

Is there any voltage?

YES—Repair short to power in the wire(s) between the climate control unit and the mode control motor. This short may also damage the climate control unit. Repair the short to power before replacing the climate control unit. ■

NO—Check for loose wires or poor connections at climate control unit connector A (32P) and at the mode control motor 7P connector. If the connections are good, substitute a known-good climate control unit, and recheck. If the symptom/indication goes away, replace the original climate control unit. ■

DTC Troubleshooting (cont'd)

DTC B1240 or DTC indicator N: A Problem in the Mode Control Linkage, Doors, or Motor

1. Clear the DTC with the HDS.
2. Turn the ignition switch to LOCK (0), and then turn to ON (II).
3. Do the self-diagnostic with the HDS (see page 21-11) or climate control unit (see page 21-12).
4. Check for DTCs.

   Is DTC B1240 or N indicated?

   YES—Go to step 5.

   NO—Intermittent failure. Check for loose wires or poor connections on the mode control motor circuit. ■

5. Turn the ignition switch to LOCK (0).
6. Disconnect the mode control motor 7P connector.
7. Disconnect climate control unit connector A (32P).
8. Check for continuity between the following terminals of climate control unit connector A (32P) and the mode control motor 7P connector.

32P:	7P:
No. 10	No. 1
No. 12	No. 2

CLIMATE CONTROL UNIT CONNECTOR A (32P)
Wire side of female terminals

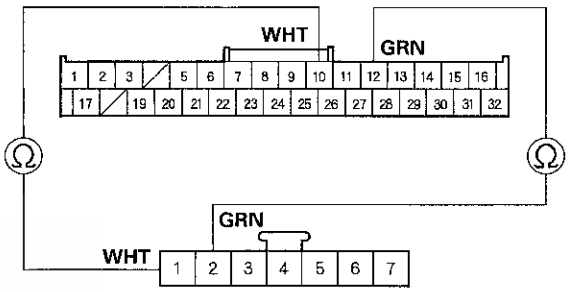

MODE CONTROL MOTOR 7P CONNECTOR
Wire side of female terminals

Is there continuity?

YES—Go to step 9.

NO—Repair open in the wire(s) between the climate control unit and the mode control motor. ■

9. Check for continuity between body ground and climate control unit connector A (32P) terminals No. 10 and No. 12 individually.

CLIMATE CONTROL UNIT CONNECTOR A (32P)

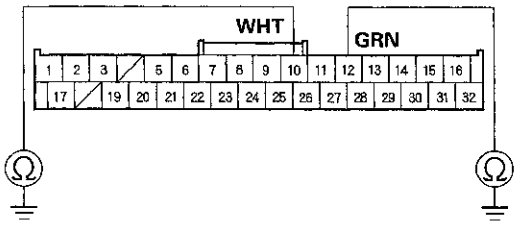

Wire side of female terminals

Is there continuity?

YES—Repair short to body ground in the wire(s) between the climate control unit and the mode control motor.■

NO—Go to step 10.

10. Test the mode control motor (see page 21-96).

Is the mode control motor OK?

YES—Substitute a known-good climate control unit, and recheck. If the symptom/indication goes away, replace the original climate control unit.■

NO—Replace the mode control motor (see page 21-96), or repair the mode control linkage or doors.■

DTC B1241 or DTC indicator P: A Problem in the Blower Motor Circuit

1. Clear the DTC with the HDS.

2. Turn the ignition switch to LOCK (0), and then turn to ON (II).

3. Do the self-diagnostic with the HDS (see page 21-11) or climate control unit (see page 21-12).

4. Check for DTCs.

Is DTC B1241 or P indicated?

YES—Go to step 5.

NO—Intermittent failure. Check for loose wires or poor connections on the blower motor circuit.■

5. Turn the ignition switch to LOCK (0).

6. Check the No. 9 (40 A) fuse in the under-hood fuse/relay box, and the No. 36 (10 A) fuse in the under-dash fuse/relay box.

Are the fuses OK?

YES—Go to step 7.

NO—Replace the fuses, and recheck. If fuses blow again, check for a short in the No. 9 (40 A) and No. 36 (10 A) fuses circuit.■

7. Connect the blower motor 2P connector terminal No. 2 to body ground with a jumper wire.

BLOWER MOTOR 2P CONNECTOR

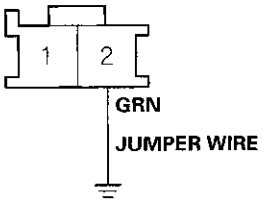

Wire side of female terminals

(cont'd)

DTC Troubleshooting (cont'd)

8. Turn the ignition switch to ON (II).

   Does the blower motor run?

   YES—Go to step 9.

   NO—Go to step 24.

9. Turn the ignition switch to LOCK (0).

10. Disconnect the jumper wire.

11. Disconnect the power transistor 4P connector.

12. Check for continuity between power transistor 4P connector terminal No. 2 and body ground.

POWER TRANSISTOR 4P CONNECTOR

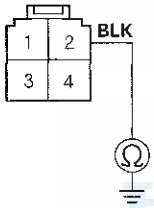

Wire side of female terminals

   Is there continuity?

   YES—Go to step 13.

   NO—Check for an open in the wire between the power transistor and body ground. If the wire is OK, check for poor ground at G401 (see page 22-20).■

13. Connect power transistor 4P connector terminals No. 2 and No. 4 with a jumper wire.

POWER TRANSISTOR 4P CONNECTOR

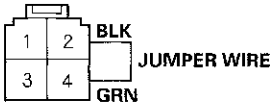

Wire side of female terminals

14. Turn the ignition switch to ON (II).

   Does the blower motor run at high speed?

   YES—Go to step 15.

   NO—Repair open in the wire between the power transistor and the blower motor.■

15. Turn the ignition switch to LOCK (0).

16. Disconnect the jumper wire.

17. Disconnect climate control unit connector A (32P).

18. Check for continuity between body ground and climate control unit connector A (32P) terminals No. 13 and No. 14 individually.

CLIMATE CONTROL UNIT CONNECTOR A (32P)

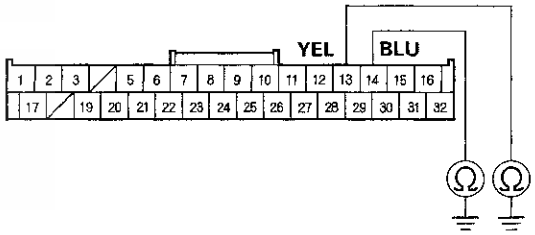

Wire side of female terminals

   Is there continuity?

   YES—Repair short to body ground in the wire(s) between the climate control unit and the power transistor.■

   NO—Go to step 19.

19. Check for continuity between the following terminals of climate control unit connector A (32P) and the power transistor 4P connector.

32P:	4P:
No. 13	No. 1
No. 14	No. 3

CLIMATE CONTROL UNIT CONNECTOR A (32P)
Wire side of female terminals

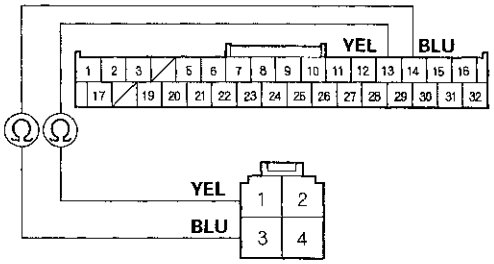

POWER TRANSISTOR 4P CONNECTOR
Wire side of female terminals

Is there continuity?

YES—Go to step 20.

NO—Repair open in the wire(s) between the climate control unit and the power transistor.■

20. Turn the ignition switch to ON (II).

21. Measure the voltage between body ground and climate control unit connector A (32P) terminals No. 13 and No. 14 individually.

CLIMATE CONTROL UNIT CONNECTOR A (32P)

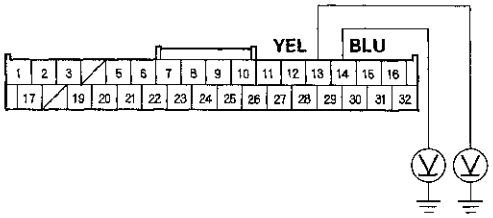

Wire side of female terminals

Is there voltage?

YES—Repair short to power in the wires.■

NO—Go to step 22.

22. Reconnect climate control unit connector A (32P).

23. Test the power transistor (see page 21-94).

Is the power transistor OK?

YES—Check for loose wires or poor connections at climate control unit connector A (32P) and at the power transistor 4P connector. If the connections are good, substitute a known-good climate control unit, and recheck. If the symptom/indication goes away, replace the original climate control unit.■

NO—Replace the power transistor.■

24. Disconnect the jumper wire.

25. Disconnect the blower motor 2P connector.

26. Measure the voltage between the blower motor 2P connector terminal No. 1 and body ground.

BLOWER MOTOR 2P CONNECTOR

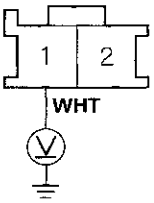

Wire side of female terminals

Is there battery voltage?

YES—Replace the blower motor.■

NO—Go to step 27.

27. Turn the ignition switch to LOCK (0).

28. Remove the blower motor relay from the under-hood fuse/relay box, and test it (see page 22-64).

Is the relay OK?

YES—Go to step 29.

NO—Replace the blower motor relay.■

(cont'd)

DTC Troubleshooting (cont'd)

29. Measure the voltage between blower motor relay 4P socket terminal No. 1 and body ground.

BLOWER MOTOR RELAY 4P SOCKET

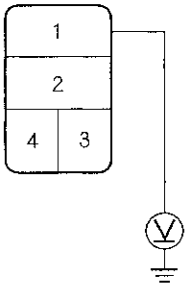

Terminal side of female terminals

Is there battery voltage?

YES—Go to step 30.

NO—Replace the under-hood fuse/relay box (see page 22-59). ■

30. Turn the ignition switch to ON (II).

31. Measure the voltage between blower motor relay 4P socket terminal No. 3 and body ground.

BLOWER MOTOR RELAY 4P SOCKET

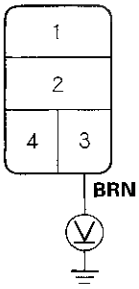

Terminal side of female terminals

Is there battery voltage?

YES—Go to step 32.

NO—Repair open in the wire between the No. 36 (10 A) fuse in the under-dash fuse/relay box and the blower motor relay. ■

32. Turn the ignition switch to LOCK (0).

33. Check for continuity between blower motor relay 4P socket terminal No. 4 and body ground.

BLOWER MOTOR RELAY 4P SOCKET

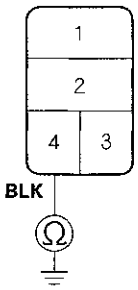

Terminal side of female terminals

Is there continuity?

YES—Repair open in the wire between the blower motor relay and the blower motor. ■

NO—Check for an open in the wire between the blower motor relay and body ground. If the wire is OK, check for poor ground at G301 (see page 22-20). ■

DTC B2967 or DTC indicator M and AUTO: An Open in the Humidity Sensor Circuit

1. Clear the DTC with the HDS.

2. Turn the ignition switch to LOCK (0), and then turn to ON (II).

3. Do the self-diagnostic with the HDS (see page 21-11) or climate control unit (see page 21-12).

4. Check for DTCs.

   Is DTC B2967 or M and AUTO indicated?

   YES—Go to step 5.

   NO—Intermittent failure. Check for loose wires or poor connections on the humidity sensor circuit. ■

5. Turn the ignition switch to LOCK (0).

6. Disconnect climate control unit connector A (32P) and B (16P).

7. Disconnect the humidity/in-car temperature sensor 4P connector.

8. Check for continuity between the following terminals of climate control unit connector A (32P) and B (16P) and humidity/in-car temperature sensor 4P connector.

32P:	4P:
No. 7	No. 4
No. 19	No. 2

16P:	4P:
No. 1	No. 3

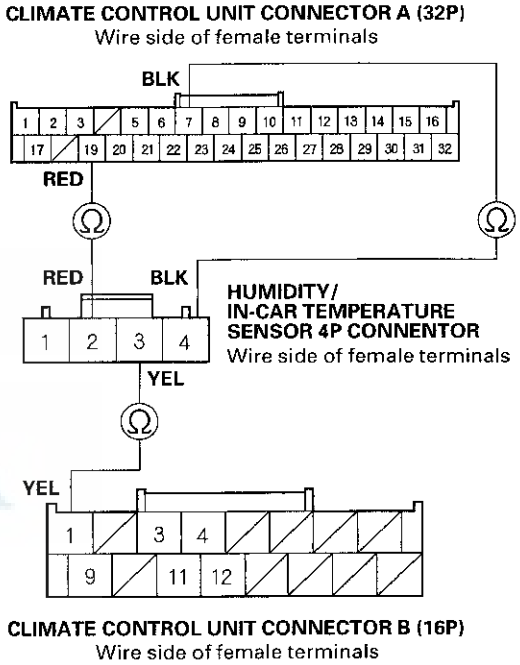

Is there continuity?

YES—Go to step 9.

NO—Repair open in the wire(s) between the climate control unit and the humidity/in-car temperature sensor. ■

(cont'd)

DTC Troubleshooting (cont'd)

9. Reconnect the humidity/in-car temperature sensor 4P connector.

10. Reconnect climate control unit connector A (32P) and B (16P).

11. Test the humidity temperature sensor (see page 21-89).

    Is the humidity sensor OK?

    YES—Check for loose wires or poor connections at climate control unit connector A (32P) and B (16P) and at the humidity/in-car temperature sensor 4P connector. If the connections are good, substitute a known-good climate control unit, and recheck. If the symptom/indication goes away, replace the original climate control unit. ■

    NO—Replace the humidity/in-car temperature sensor (see page 21-90). ■

DTC B2968 or DTC indicator N and AUTO: A Short in the Humidity Sensor Circuit

1. Clear the DTC with the HDS.

2. Turn the ignition switch to LOCK (0), and then turn to ON (II).

3. Do the self-diagnostic with the HDS (see page 21-11) or climate control unit (see page 21-12).

4. Check for DTCs.

   Is DTC B2968 or N and AUTO indicated?

   YES—Go to step 5.

   NO—Intermittent failure. Check for loose wires or poor connections on the humidity sensor circuit. ■

5. Turn the ignition switch to LOCK (0).

6. Disconnect climate control unit connector A (32P) and B (16P).

7. Disconnect the humidity/in-car temperature sensor 4P connector.

8. Check for continuity between body ground and climate control unit connector A (32P) terminal No. 7, and between climate control unit connector B (16P) terminal No. 1 and body ground.

CLIMATE CONTROL UNIT CONNECTOR A (32P)

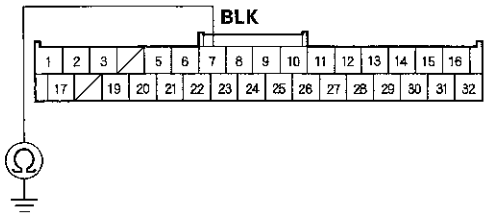

Wire side of female terminals

CLIMATE CONTROL UNIT CONNECTOR B (16P)

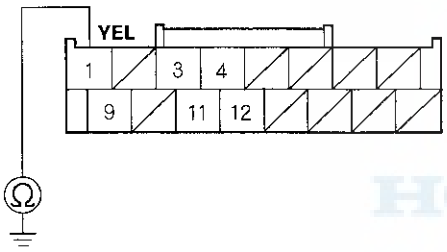

Wire side of female terminals

Is there continuity?

YES—Repair short to body ground in the wire(s) between the climate control unit and the humidity/in-car temperature sensor. ■

NO—Go to step 9.

9. Check for continuity between terminals of climate control unit connector A (32P) and B (16P) as follows.

From terminal	To terminals
A7	A19, B1
A19	B1

Is there continuity between any of the terminals?

YES—Repair the short in the wires. ■

NO—Go to step 10.

(cont'd)

DTC Troubleshooting (cont'd)

10. Turn the ignition switch to ON (II), and measure the same terminals for voltage between the terminals and body ground.

CLIMATE CONTROL UNIT CONNECTOR A (32P)

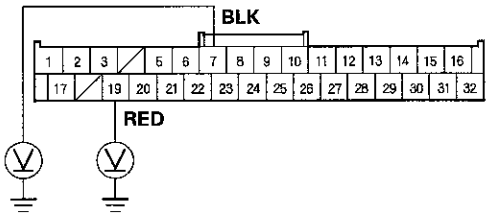

Wire side of female terminals

CLIMATE CONTROL UNIT CONNECTOR B (16P)

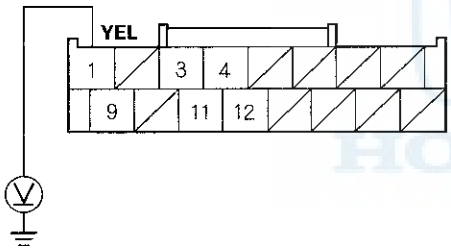

Wire side of female terminals

Is there any voltage?

YES—Repair short to power in the wire(s) between the climate control unit and the humidity/in-car temperature sensor. This short may also damage the climate control unit. Repair the short to power before replacing the climate control unit. ■

NO—Go to step 11.

11. Reconnect the humidity/in-car temperature sensor 4P connector.

12. Reconnect climate control unit connector A (32P) and B (16P).

13. Test the humidity temperature sensor (see page 21-89).

Is the humidity temperature sensor OK?

YES—Substitute a known-good climate control unit, and recheck. If the symptom/indication goes away, replace the original climate control unit. ■

NO—Replace the humidity/in-car temperature sensor (see page 21-90). ■

DTC B2983 or DTC indicator B and AUTO: A Problem in the Recirculation Control Linkage, Door, or Motor

1. Clear the DTC with the HDS.

2. Turn the ignition switch to LOCK (0), and then turn to ON (II).

3. Do the self-diagnostic with the HDS (see page 21-11) or climate control unit (see page 21-12).

4. Check the DTCs.

   Is DTC B2983 or B and AUTO indicated?

   YES—Go to step 5.

   NO—Intermittent failure. Check for loose wires or poor connections on the recirculation control motor circuit. ■

5. Turn the ignition switch to LOCK (0).

6. Disconnect the recirculation control motor 7P connector.

7. Disconnect climate control unit connector A (32P).

8. Check for continuity between the following terminals of climate control unit connector A (32P) and the recirculation control motor 7P connector.

32P:	7P:
No. 15	No. 1
No. 16	No. 2

CLIMATE CONTROL UNIT CONNECTOR A (32P)
Wire side of female terminals

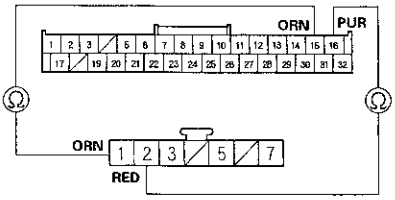

RECIRCULATION CONTROL MOTOR 7P CONNECTOR
Wire side of female terminals

   Is there continuity?

   YES—Go to step 9.

   NO—Repair open in the wire(s) between the climate control unit and the recirculation control motor. ■

9. Check for continuity between body ground and climate control unit connector A (32P) terminals No. 15 and No. 16 individually.

CLIMATE CONTROL UNIT CONNECTOR A (32P)

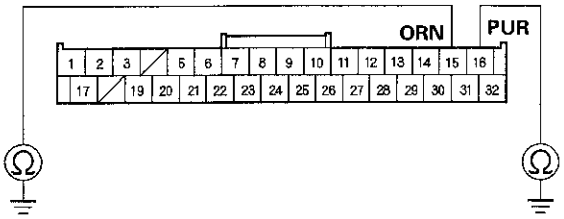

Wire side of female terminals

   Is there continuity?

   YES—Repair short to body ground in the wire(s) between the climate control unit and the recirculation control motor. ■

   NO—Go to step 10.

10. Test the recirculation control motor (see page 21-97).

   Is the recirculation control motor OK?

   YES—Substitute a known-good climate control unit, and recheck. If the symptom/indication goes away, replace the original climate control unit. ■

   NO—Replace the recirculation control motor (see page 21-97), or repair the recirculation control linkage or door. ■

DTC Troubleshooting (cont'd)

DTC B2986 or DTC indicator A and AUTO: An Open in the Recirculation Control Motor Circuit

1. Clear the DTC with the HDS.

2. Turn the ignition switch to LOCK (0), and then turn to ON (II).

3. Do the self-diagnostic with the HDS (see page 21-11) or climate control unit (see page 21-12).

4. Check for DTCs.

   Is DTC B2986 or A and AUTO?

   YES—Go to step 5.

   NO—Intermittent failure. Check for loose wires or poor connections on the recirculation control motor circuit. ■

5. Turn the ignition switch to LOCK (0).

6. Test the recirculation control motor (see page 21-97).

   Is the recirculation control motor OK?

   YES—Go to step 7.

   NO—Replace the recirculation control motor (see page 21-97). ■

7. Disconnect the recirculation control motor 7P connector.

8. Disconnect climate control unit connector A (32P).

9. Check for continuity between the following terminals of climate control unit connector A (32P) and the recirculation control motor 7P connector.

32P:	7P:
No. 7	No. 5
No. 19	No. 7
No. 31	No. 3

CLIMATE CONTROL UNIT CONNECTOR A (32P)
Wire side of female terminals

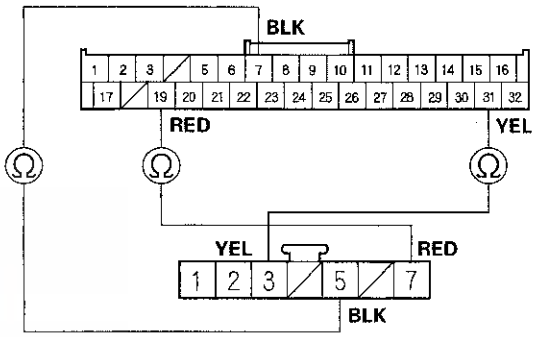

RECIRCULATION CONTROL MOTOR 7P CONNECTOR
Wire side of female terminals

Is there continuity?

YES—Check for loose wires or poor connections at climate control unit connector A (32P) and at the recirculation control motor 7P connector. If the connections are good, substitute a known-good climate control unit and recheck. If the symptom/indication goes away, replace the original climate control unit. ■

NO—Repair open in the wire(s) between the climate control unit and the recirculation control motor. ■

DTC B2989: A Problem in the A/C Compressor Motor

NOTE: Stop the engine for at least 1 hour.

1. Check the No. 22 (7.5 A) fuse in the under-dash fuse/relay box.

   Is the fuse OK?

   YES—Go to step 2.

   NO—Replace the fuse, and recheck. If the fuse blows again, check for a short in the No. 22 (7.5 A) fuse circuit. ■

2. Clear the DTC with the HDS.

3. Turn the ignition switch to LOCK (0), and then turn to ON (II).

4. Do the self-diagnostic with the HDS (see page 21-11).

5. Check for DTCs.

   Is DTC B2989 indicated?

   YES—Go to step 6.

   NO—Intermittent failure. Check for loose wires or poor connections at the A/C compressor connector (3P) and climate control unit connector B (16P). ■

6. Check for DTCs.

   Is DTC B2998 indicated?

   YES—Troubleshooting DTC B2998 (see page 21-73). ■

   NO—Replace the A/C compressor (see page 21-110). ■

DTC B2990: A Problem in the A/C Compressor Driver

NOTE:
- Put on gloves to protect your hands from electrical shock.
- Stop the engine for at least 1 hour.
- IMA components are located in this area. The IMA is a high-voltage system. You must be familiar with the IMA system before working on or around it. Make sure you have read the IMA service precautions before doing repairs or service (see page 12-3).

1. Check the No. 22 (7.5 A) fuse in the under-dash fuse/relay box.

   Is the fuse OK?

   YES—Go to step 2.

   NO—Replace the fuse, and recheck. If the fuse blows again, check for a short in the No. 22 (7.5 A) fuse circuit. ■

2. Clear the DTC with the HDS.

3. Turn the ignition switch to LOCK (0), and then turn to ON (II).

4. Do the self-diagnostic with the HDS (see page 21-11).

5. Check for DTCs.

   Is DTC B2990 or B2998 indicated?

   YES—
   - B2990 indicated: go to step 6.
   - B2998 indicated: Troubleshooting DTC B2998 (see page 21-73).

   NO—Intermittent failure, the system is OK at this time. ■

6. Remove the IPU lid (see page 12-180).

(cont'd)

DTC Troubleshooting (cont'd)

7. Check that the A/C compressor driver 3P connector is properly connected on the A/C compressor driver.

   Is it connected properly?

   YES—Go to step 8.

   NO—Reconnect the connector and recheck the function.■

8. From the under hood, disconnect the A/C compressor power 3P connector.

9. At the IPU, disconnect the A/C compressor driver 3P connector from the A/C compressor driver.

10. Check for continuity between the following terminals of the A/C compressor power 3P connector and the A/C compressor driver 3P connector.

Compressor 3P:	Driver 3P:
No. 1	No. 3
No. 2	No. 1
No. 3	No. 2

A/C COMPRESSOR POWER 3P CONNECTOR
Terminal side of female terminals

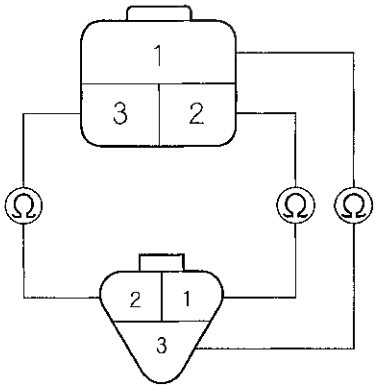

A/C COMPRESSOR DRIVER 3P CONNECTOR
Terminal side of female terminals

Is there continuity?

YES—Replace the A/C compressor (see page 21-110).■

NO—Replace the A/C compressor power cable.■

DTC B2992 or DTC indicator F and FRESH:
An Open in the Thermal Protector Circuit

1. Clear the DTC with the HDS.

2. Turn the ignition switch to LOCK (0), and then turn to ON (II).

3. Do the self-diagnostic with the HDS (see page 21-11) or the climate control unit (see page 21-12).

4. Check for DTCs.

   Is DTC B2992 or F and FRESH indicated?

   YES—Go to step 5.

   NO—Intermittent failure. Check for loose wires or poor connections on the thermal protector circuit.■

5. Clear the DTC with the HDS.

6. Turn the ignition switch to LOCK (0).

7. Disconnect the A/C compressor clutch 3P connector.

8. Connect A/C compressor clutch 3P connector terminals No. 1 and No. 3 with a jumper wire.

A/C COMPRESSOR CLUTCH 3P CONNECTOR

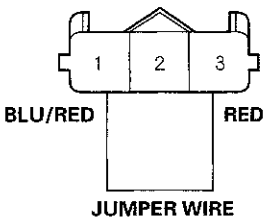

Wire side of female terminals

9. Start the engine, and push the A/C button ON.

10. Check for DTCs using the HDS or self-diagnostic.

    Is DTC B2992 or F and FRESH indicated?

    YES—Go to step 11.

    NO—Check the A/C compressor clutch (see page 21-113) and the thermal protector (see page 21-113). ■

11. Turn the ignition switch to LOCK (0).

12. Disconnect the jumper wire.

13. Disconnect climate control unit connector B (16P).

14. Check for continuity between the following terminals of climate control unit connector B (16P) and the A/C compressor clutch 3P connector.

16P:	3P:
No. 11	No. 1
No. 12	No. 3

CLIMATE CONTROL UNIT CONNECTOR B (16P)
Wire side of female terminals

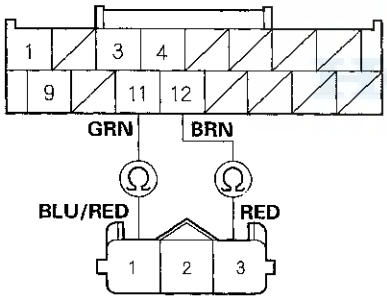

A/C COMPRESSOR CLUTCH 3P CONNECTOR
Wire side of female terminals

Is there continuity?

YES—Substitute a known-good climate control unit, and recheck. If the symptom/indication goes away, replace the original climate control unit. ■

NO—Repair open in the wire(s) between the climate control unit and the A/C compressor. ■

DTC B2993 or DTC indicator L and FRESH:
A Short in the Thermal Protector Circuit

1. Clear the DTC with the HDS.

2. Turn the ignition switch to LOCK (0), and then turn to ON (II).

3. Do the self-diagnostic with the HDS (see page 21-11) or climate control unit (see page 21-12).

4. Check for DTCs.

   Is DTC B2993 or L and FRESH indicated?

   YES—Go to step 5.

   NO—Intermittent failure. Check for loose wires or poor connections on the thermal protector circuit. ■

5. Clear the DTC with the HDS.

6. Turn the ignition switch to LOCK (0).

7. Disconnect the A/C compressor clutch 3P connector.

8. Connect the A/C compressor clutch 3P connector terminals No. 1 and No. 3 with a jumper wire.

A/C COMPRESSOR CLUTCH 3P CONNECTOR

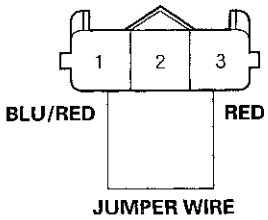

Wire side of female terminals

(cont'd)

DTC Troubleshooting (cont'd)

9. Start the engine, and turn on the A/C.

10. Check for DTCs using the HDS or self-diagnostic.

    Is DTC B2993 or L and FRESH indicated?

    YES—Go to step 11.

    NO—Check the A/C compressor clutch (see page 21-113) and the thermal protector (see page 21-113). ■

11. Turn the ignition switch to LOCK (0).

12. Disconnect the jumper wire.

13. Disconnect climate control unit connector B (16P).

14. Check for continuity between body ground and climate control unit connector B (16P) terminals No. 11 and No. 12 individually.

CLIMATE CONTROL UNIT CONNECTOR B (16P)

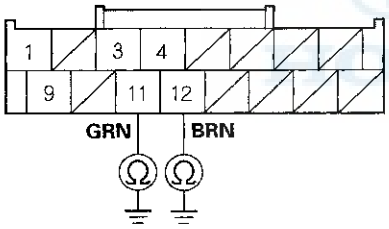

Wire side of female terminals

Is there continuity?

YES—Repair short to body ground in the wire(s) between the climate control unit and the A/C compressor. ■

NO—Substitute a known-good climate control unit, and recheck. If the symptom/indication goes away, replace the original climate control unit. ■

DTC B2995 or DTC indicator A and FRESH: A Problem in the Auxiliary Electric Water Pump Circuit

1. Clear the DTC with the HDS.

2. Turn the ignition switch to LOCK (0), and then turn to ON (II).

3. Do the self-diagnostic with the HDS (see page 21-11) or climate control unit (see page 21-12).

4. Check for DTCs.

   Is DTC B2995 or A and FRESH indicated?

   YES—Go to step 5.

   NO—Intermittent failure. Check for loose wires or poor connections on the auxiliary electric water pump circuit. ■

5. Check the No. 22 (7.5 A) fuse in the under-hood fuse/relay box and the No. 36 (10 A) fuse in the under-dash fuse/relay box.

   Are the fuses OK?

   YES—Go to step 6.

   NO—Replace the fuses, and recheck. If the fuse blows again, check for a short in the No. 22 (7.5 A) or No. 36 (10 A) fuse circuit. ■

6. Turn the ignition switch to LOCK (0).

7. Remove the auxiliary electric water pump relay from the auxiliary under-hood fuse/relay box, and test it (see page 22-64).

   Is the relay OK?

   YES—Go to step 8.

   NO—Replace the auxiliary electric water pump relay. ■

8. Measure the voltage between auxiliary electric water pump relay 4P socket terminal No. 1 and body ground.

AUXILIARY ELECTRIC WATER PUMP RELAY 4P SOCKET

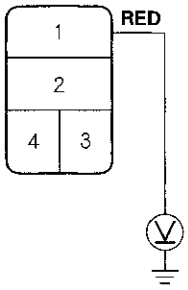

Terminal side of female terminals

Is there battery voltage?

YES—Go to step 9.

NO—Repair open in the wire between the No. 22 (7.5 A) fuse in the under-hood fuse/relay box and the auxiliary electric water pump relay.■

9. Turn the ignition switch to ON (II).

10. Measure the voltage between auxiliary electric water pump relay 4P socket terminal No. 4 and body ground.

AUXILIARY ELECTRIC WATER PUMP RELAY 4P SOCKET

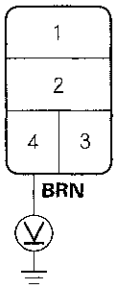

Terminal side of female terminals

Is there battery voltage?

YES—Go to step 11.

NO—Repair open in the wire between the No. 36 (10 A) fuse in the under-dash fuse/relay box and the auxiliary electric water pump relay.■

11. Turn the ignition switch to LOCK (0).

12. Disconnect the auxiliary electric water pump 2P connector.

13. Check for continuity between auxiliary electric water pump relay 4P socket terminal No. 2 and auxiliary electric water pump 2P connector terminal No. 1.

AUXILIARY ELECTRIC WATER PUMP RELAY 4P SOCKET
Terminal side of female terminals

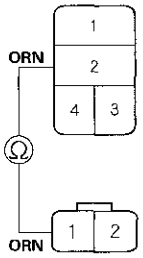

AUXILIARY ELECTRIC WATER PUMP 2P CONNECTOR
Wire side of female terminals

Is there continuity?

YES—Go to step 14.

NO—Repair open in the wire between the auxiliary electric water pump relay and the auxiliary electric water pump.■

14. Check for continuity between auxiliary electric water pump 2P connector terminal No. 2 and body ground.

AUXILIARY ELECTRIC WATER PUMP 2P CONNECTOR

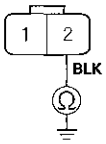

Wire side of female terminals

Is there continuity?

YES—Go to step 15.

NO—Check for an open in the wire between the auxiliary electric water pump and body ground. If the wire is OK, check for poor ground at G301 (see page 22-20).■

(cont'd)

DTC Troubleshooting (cont'd)

15. Reinstall the auxiliary electric water pump relay.

16. Disconnect climate control unit connector B (16P).

17. Turn the ignition switch to ON (II).

18. Measure the voltage between climate control unit connector B (16P) terminal No. 9 and body ground.

CLIMATE CONTROL UNIT CONNECTOR B (16P)

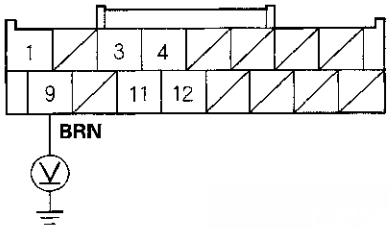

Wire side of female terminals

Is there battery voltage?

YES—Go to step 19.

NO—Repair open in the wire between the auxiliary electric water pump relay and the climate control unit. ■

19. Turn the ignition switch to LOCK (0).

20. Check for continuity between climate control unit connector B (16P) terminal No. 4 and auxiliary electric water pump relay 4P socket terminal No. 2.

CLIMATE CONTROL UNIT CONNECTOR B (16P)
Wire side of female terminals

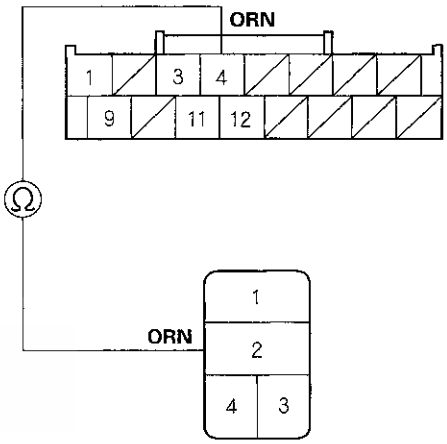

AUXILIARY ELECTRIC WATER PUMP RELAY 4P SOCKET
Terminal side of female terminals

Is there continuity?

YES—Go to step 21.

NO—Repair open in the auxiliary electric water pump feedback wire. ■

21. Reconnect the auxiliary electric water pump 2P connector.

22. Reconnect climate control unit connector B (16P).

23. Run the auxiliary electric water pump by selecting the CLIMATE CONTROL SELF TEST Menu from the HDS.

24. Listen to the auxiliary electric water pump by touching it with a flat-tip screwdriver or a stethoscope.

Can you hear the pump running?

YES—Substitute a known-good climate control, and recheck. If the symptom/indication goes away, replace the original climate control unit. ■

NO—Replace the auxiliary electric water pump. ■

DTC B2996 or DTC indicator P and AUTO: An Open in the Heater Core Temperature Sensor Circuit

1. Clear the DTC with the HDS.

2. Turn the ignition switch to LOCK (0), and then turn to ON (II).

3. Do the self-diagnostic with the HDS (see page 21-11) or climate control unit (see page 21-12).

4. Check the DTCs.

   Is DTC B2996 or P and AUTO indicated?

   YES—Go to step 5.

   NO—Intermittent failure. Check for loose wires or poor connections on the heater core temperature sensor circuit.■

5. Turn the ignition switch to LOCK (0).

6. Remove the heater core temperature sensor (see page 21-93), and test it (see page 21-93).

   Is the heater core temperature sensor OK?

   YES—Go to step 7.

   NO—Replace the heater core temperature sensor.■

7. Disconnect climate control unit connector A (32P) and B (16P).

8. Check for continuity between climate control unit connector A (32P) terminal No. 19 and the heater core temperature sensor 2P connector terminal No. 2.

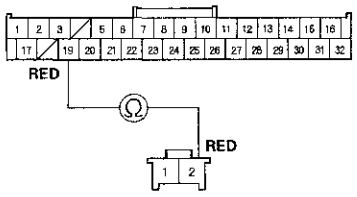

   Is there continuity?

   YES—Go to step 9.

   NO—Repair open in the wire between the climate control unit and the heater core temperature sensor.■

9. Check for continuity between climate control unit connector B (16P) terminal No. 3 and the heater core temperature sensor 2P connector terminal No. 1.

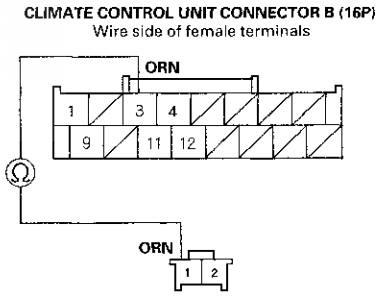

   Is there continuity?

   YES—Check for loose wires or poor connections at climate control unit connector A (32P) and B (16P) and at the heater core temperature sensor 2P connector. If the connections are good, substitute a known-good climate control unit, and recheck. If the symptom/indication goes away, replace the original climate control unit.■

   NO—Repair open in the wire between the climate control unit and the heater core temperature sensor.■

DTC Troubleshooting (cont'd)

DTC B2997 or DTC indicator H and AUTO: A Short in the Heater Core Temperature Sensor Circuit

1. Clear the DTC with the HDS.

2. Turn the ignition switch to LOCK (0), and then turn to ON (II).

3. Do the self-diagnostic with the HDS (see page 21-11) or climate control unit (see page 21-12).

4. Check for DTCs.

   Is DTC B2997 or H and AUTO indicated?

   YES—Go to step 5.

   NO—Intermittent failure. Check for loose wires or poor connections on the heater core temperature sensor circuit. ■

5. Turn the ignition switch to LOCK (0).

6. Remove the heater core temperature sensor (see page 21-93), and test it (see page 21-93).

   Is the heater core temperature sensor OK?

   YES—Go to step 7.

   NO—Replace the heater core temperature sensor. ■

7. Disconnect climate control unit connector A (32P) and B (16P).

8. Check for continuity between body ground and the heater core temperature sensor 2P connector terminals No. 1 and No. 2 individually.

HEATER CORE TEMPERATURE SENSOR 2P CONNECTOR

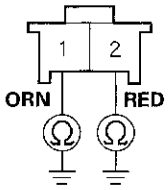

Wire side of female terminals

Is there continuity?

YES—Repair short to body ground in the wire(s) between the climate control unit and the heater core temperature sensor. ■

NO—Go to step 9.

9. Check for continuity between the heater core temperature sensor 2P connector terminals No. 1 and No. 2.

HEATER CORE TEMPERATURE SENSOR 2P CONNECTOR

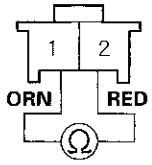

Wire side of female terminals

Is there continuity?

YES—Repair short in the wires between the climate control unit and the heater core temperature sensor. ■

NO—Substitute a known-good climate control unit, and recheck. If the symptom/indication goes away, replace the original climate control unit. ■

DTC B2998: A Problem in the A/C Compressor Driver

1. Check the No. 22 (7.5 A) fuse in the under-dash fuse/relay box.

   Is the fuse OK?

   YES—Go to step 2.

   NO—Replace the fuse, and recheck. If the fuse blows again, check for a short in the No. 22 (7.5 A) fuse circuit. ■

2. Clear the DTC with the HDS.

3. Turn the ignition switch to LOCK (0), and then turn to ON (II).

4. Do the self-diagnostic with the HDS (see page 21-11).

5. Check for DTCs.

   Is DTC B2998 indicated?

   YES—Substitute a known-good A/C compressor driver, and recheck. If the symptom/indication goes away, replace the original A/C compressor driver (see page 21-109). ■

   NO—Intermittent failure, the system is OK at this time. ■

DTC B2999: A problem in the A/C Compressor Delivery Valve

1. Check the No. 22 (7.5 A) fuse in the under-dash fuse/relay box.

   Is the fuse OK?

   YES—Go to step 2.

   NO—Replace the fuse, and recheck. If the fuse blows again, check for a short in the No. 22 (7.5 A) fuse circuit. ■

2. Clear the DTC with the HDS.

3. Turn the ignition switch to LOCK (0), and then turn to ON (II).

4. Do the self-diagnostic with the HDS (see page 21-11).

5. Check for DTCs.

   Is DTC B2999 indicated?

   YES—Replace the A/C compressor (see page 21-110). ■

   NO—Intermittent failure, the system is OK at this time. ■

DTC Troubleshooting (cont'd)

DTC indicator B and FRESH: A Problem in the Auxiliary Electric Water Pump Connection

1. Do the self-diagnostic with the climate control unit (see page 21-12).

2. Check the DTCs.

   Is DTC B and FRESH indicated?

   YES—Go to step 3.

   NO—Intermittent failure. Check for loose wires or poor connections on the auxiliary electric water pump circuit. ■

3. Turn the ignition switch to LOCK (0).

4. Disconnect the auxiliary electric water pump 2P connector.

5. Disconnect climate control unit connector B (16P).

6. Check for continuity between climate control unit connector B (16P) terminal No. 4 and the auxiliary electric water pump 2P connector terminal No. 1.

CLIMATE CONTROL UNIT CONNECTOR B (16P)
Wire side of female terminals

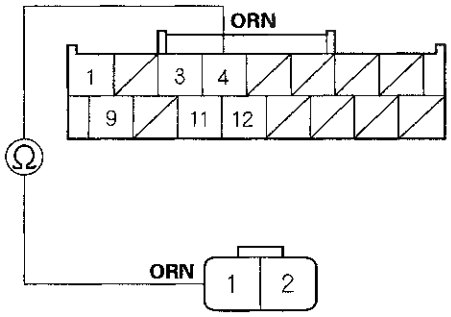

AUXILIARY ELECTRIC WATER PUMP 2P CONNECTOR
Wire side of female terminals

Is there continuity?

YES—Substitute a known-good climate control unit, and recheck. If the symptom/indication goes away, replace the original climate control unit. ■

NO—Repair an open in the wire between the climate control unit and the auxiliary electric water pump. ■

DTC indicator J and FRESH: IMA Communication Bus Line Error

1. Do the self-diagnostic with the climate control unit (see page 21-12).

2. Check the DTCs.

   Is DTC J and FRESH indicated?

   YES—Check for powertrain DTCs (see page 11-3). ■

   NO—Intermittent failure, the system is OK at this time. ■

Climate Control Power and Ground Circuit Troubleshooting

1. Check the No. 36 (10 A) fuse in the under-dash fuse/relay box.

   Is the fuse OK?

   YES—Go to step 2.

   NO—Replace the fuse, and recheck. If the fuse blows again, check for a short in the No. 36 (10 A) fuse circuit. ■

2. Disconnect climate control unit connector A (32P).

3. Turn the ignition switch to ON (II).

4. Measure the voltage between climate control unit connector A (32P) terminal No. 3 and body ground.

   CLIMATE CONTROL UNIT CONNECTOR A (32P)

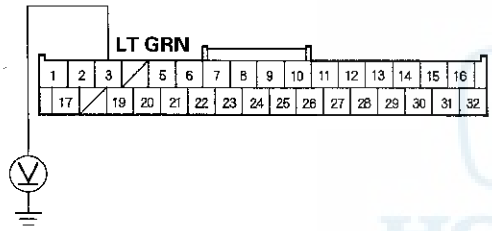

Wire side of female terminals

   Is there battery voltage?

   YES—Go to step 5.

   NO—Repair an open in the wire between the No. 36 (10 A) fuse in the under-dash fuse/relay box and the climate control unit. ■

5. Turn the ignition switch to LOCK (0).

6. Check for continuity between climate control unit connector A (32P) terminal No. 5 and body ground.

   CLIMATE CONTROL UNIT CONNECTOR A (32P)

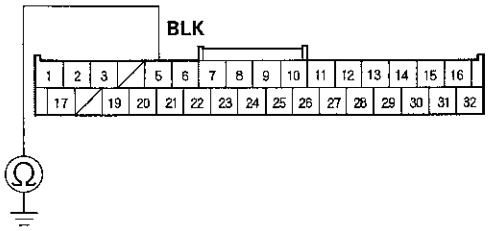

Wire side of female terminals

   Is there continuity?

   YES—Check for loose wires and poor connections at climate control unit connector A (32P). If connections are good, substitute a known-good climate control unit and recheck. If the symptom/indication goes away, replace the original climate control unit. ■

   NO—Check for an open in the wire between the climate control unit and body ground. If the wire is OK, check for poor ground at G504 (see page 22-26). ■

Navigation Communication Line Circuit Troubleshooting

1. Operate the climate control system in several modes.

   Is the climate control system OK?

   YES—Go to step 2.

   NO—Do the self-diagnostic with the HDS (see page 21-11) or climate control unit (see page 21-12).■

2. Do the Navi system link (see page 23-124).■

   Is the Air-Con icon red?

   YES—
   - '06-08 models: Go to step 3.
   - '09 model: Go to step 7.

   NO—Go to step 13.

3. Turn the ignition switch to LOCK (0).

4. Disconnect navigation unit connector F (5P).

5. Disconnect climate control unit connector A (32P).

6. Check for continuity between the following terminals of climate control unit connector A (32P) and navigation unit connector F (5P).

32P:	5P:
No. 28	No. 4
No. 29	No. 2
No. 30	No. 3

CLIMATE CONTROL UNIT CONNECTOR A (32P)
Wire side of female terminals

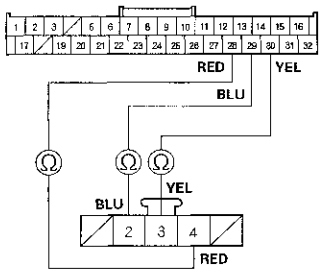

NAVIGATION UNIT CONNECTOR F (5P)
Wire side of female terminals

Is there continuity?

YES—Go to step 11.

NO—Repair open in the wire(s) between the climate control unit and the navigation unit.■

7. Turn the ignition switch to LOCK (0).

8. Disconnect navigation unit connector D (12P).

9. Disconnect climate control unit connector A (32P).

10. Check for continuity between the following terminals of climate control unit connector A (32P) and navigation unit connector D (12P).

32P:	12P:
No. 28	No. 6
No. 29	No. 12
No. 30	No. 5

CLIMATE CONTROL UNIT CONNECTOR A (32P)
Wire side of female terminals

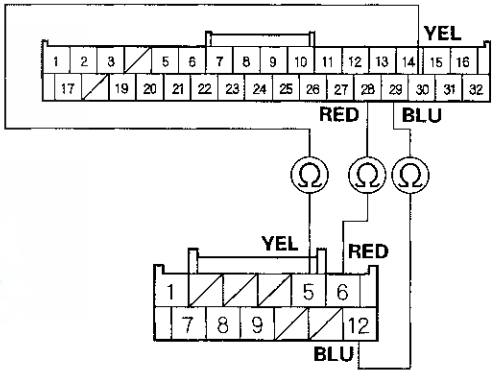

NAVIGATION UNIT CONNECTOR D (12P)
Wire side of female terminals

Is there continuity?

YES—Go to step 11.

NO—Repair open in the wire(s) between the climate control unit and the navigation unit.■

11. Check for continuity between body ground and climate control unit connector A (32P) terminals No. 28, 29, and No. 30 individually.

CLIMATE CONTROL UNIT CONNECTOR A (32P)

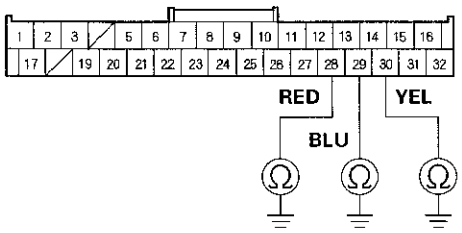

Wire side of female terminals

Is there continuity?

YES—Repair short to body ground in the wire(s) between the climate control unit and the navigation unit.■

NO—Go to step 12.

12. Reconnect climate control unit connector A (32P).

13. '06-08 models: Disconnect navigation unit connector F (5P).
'09 model: Disconnect navigation unit connector D (12P).

14. Connect climate control unit connector A (32P) terminals No. 28, 29, and No. 30 with a jumper wire.

CLIMATE CONTROL UNIT CONNECTOR A (32P)

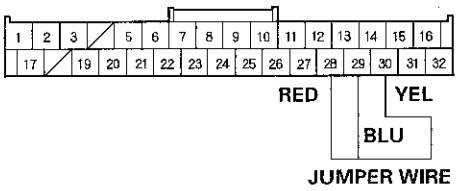

Wire side of female terminals

15. Turn the ignition switch to ON (II).

16. Press the RECIRCULATION and OFF buttons.

Does the RECIRCULATION indicator turn on?

YES—Do the Unit check with the navigation system (see page 23-127).■

NO—Substitute a known-good climate control unit, and recheck. If the symptom goes away, replace the original climate control unit.■

Radiator and A/C Condenser Fan Low Speed Circuit Troubleshooting

NOTE:
- Do not use this troubleshooting procedure if the A/C compressor is inoperative. Refer to the symptom troubleshooting index.
- If A/C refrigerant pressure is abnormal, the radiator fans are controlled based on engine coolant temperature (see page 21-29).
- Before doing symptom troubleshooting, check for powertrain DTCs (see page 11-3).

1. Check the No. 7 (20 A) fuse in the under-hood fuse/relay box, and the No. 36 (10 A) fuse in the under-dash fuse/relay box.

   Are the fuses OK?

   YES—Go to step 2.

   NO—Replace the fuses, and recheck. If either fuse blows again, check for a short in the No. 7 (20 A) and No. 36 (10 A) fuse circuits. ■

2. Remove the radiator fan relay from the under-hood fuse/relay box, and test it (see page 22-64).

   Is the relay OK?

   YES—Go to step 3.

   NO—Replace the radiator fan relay. ■

3. Connect the HDS to the DLC.

4. Turn the ignition switch to ON (II).

5. Turn on the A/C.

6. Check the FAN LOW CTRL in the PGM-FI Data List with the HDS.

   Is the FAN LOW CTRL on?

   YES—Go to step 7.

   NO—Substitute a known-good PCM (see page 11-7), and retest. If the symptom/indication goes away with a known-good PCM, replace the original PCM (see page 11-238). ■

7. Turn the ignition switch to LOCK (0).

8. Measure the voltage between radiator fan relay 4P socket terminal No. 1 and body ground.

RADIATOR FAN RELAY 4P SOCKET

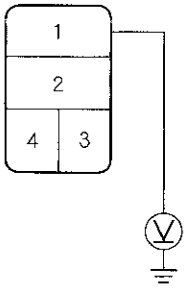

Terminal side of female terminals

Is there battery voltage?

YES—Go to step 9.

NO—Replace the under-hood fuse/relay box (see page 22-59). ■

9. Connect radiator fan relay 4P socket terminals No. 1 and No. 2 with a jumper wire.

RADIATOR FAN RELAY 4P SOCKET

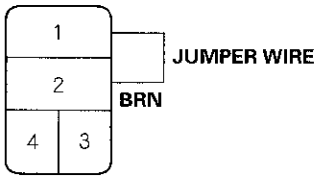

Terminal side of female terminals

Do the A/C condenser and radiator fans run on low?

YES—Go to step 10.

NO—Go to step 19.

10. Disconnect the jumper wire.

11. Turn the ignition switch to ON (II).

12. Measure the voltage between radiator fan relay 4P socket terminal No. 3 and body ground.

RADIATOR FAN RELAY 4P SOCKET

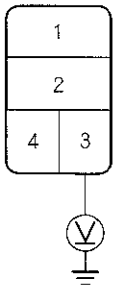

Terminal side of female terminals

Is there battery voltage?

YES—Go to step 13.

NO—Go to step 37.

13. Turn the ignition switch to LOCK (0).

14. Reinstall the radiator fan relay.

15. Jump the SCS line with the HDS.

    NOTE: This step must be done to protect the powertrain control module (PCM) from damage.

16. Disconnect PCM connector A (44P).

17. Connect PCM connector A (44P) terminal No. 4 to body ground with a jumper wire.

PCM CONNECTOR A (44P)

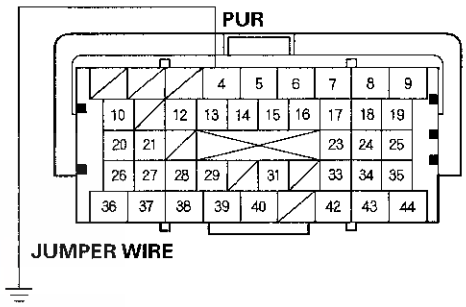

Terminal side of female terminals

18. Turn the ignition switch to ON (II).

    Do the A/C condenser and radiator fans run on low?

    YES—Check for loose wires or poor connections at PCM connector A (44P) terminal No. 4. If the connections are good, substitute a known-good PCM (see page 11-7), and recheck. If the symptom/indication goes away, replace the original PCM (see page 11-238). ■

    NO—Repair open in the wire between the radiator fan relay and the PCM. ■

19. Disconnect the jumper wire.

20. Reinstall the radiator fan relay.

21. Disconnect the radiator fan 2P connector.

22. Turn the ignition switch to ON (II), then set the A/C button and fan control dial ON.

(cont'd)

Radiator and A/C Condenser Fan Low Speed Circuit Troubleshooting (cont'd)

23. Measure the voltage between radiator fan 2P connector terminal No. 2 and body ground.

RADIATOR FAN 2P CONNECTOR

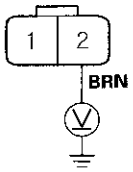

Wire side of female terminals

Is there battery voltage?

YES—Go to step 24.

NO—Repair open in the wire between the radiator fan relay and the radiator fan. ■

24. Set the A/C button and fan control dial OFF, then turn the ignition switch to LOCK (0).

25. Reconnect the radiator fan 2P connector.

26. Connect radiator fan 2P connector terminal No. 1 to body ground with a jumper wire.

RADIATOR FAN 2P CONNECTOR

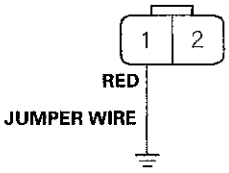

Wire side of female terminals

27. Turn the ignition switch to ON (II), then set the A/C button and fan control dial ON.

Does the radiator fan run?

YES—Go to step 28.

NO—Replace the radiator fan motor (see page 10-12). ■

28. Set the A/C button and fan control dial OFF, then turn the ignition switch to LOCK (0).

29. Disconnect the jumper wire.

30. Remove the fan control relay from the under-hood relay box, and test it (see page 22-64).

Is the relay OK?

YES—Go to step 31.

NO—Replace the fan control relay. ■

31. Turn the ignition switch to ON (II), then set the A/C button and fan control dial ON.

32. Measure the voltage between fan control relay 5P socket terminal No. 1 and body ground.

FAN CONTROL RELAY 5P SOCKET

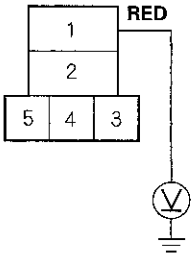

Terminal side of female terminals

Is there battery voltage?

YES—Go to step 33.

NO—Repair open in the wire between the radiator fan and the fan control relay. ■

33. Set the A/C button and fan control dial OFF, then turn the ignition switch to LOCK (0).

34. Disconnect the A/C condenser fan 2P connector.

35. Check for continuity between fan control relay 5P socket terminal No. 4 and A/C condenser fan 2P connector terminal No. 2.

FAN CONTROL RELAY 5P SOCKET
Terminal side of female terminals

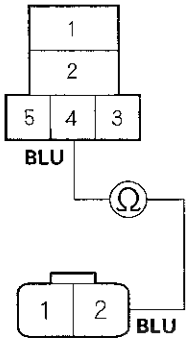

A/C CONDENSER FAN 2P CONNECTOR
Wire side of female terminals

Is there continuity?

YES—Go to step 36.

NO—Repair open in the wire between the fan control relay and the A/C condenser fan.■

36. Check for continuity between A/C condenser fan 2P connector terminal No. 1 and body ground.

A/C CONDENSER FAN 2P CONNECTOR

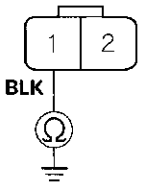

Wire side of female terminals

Is there continuity?

YES—Replace the A/C condenser fan motor (see page 10-12).■

NO—Check for an open in the wire between the A/C condenser fan and body ground. If the wire is OK, check for poor ground at G301 (see page 22-20).■

37. Turn the ignition switch to LOCK (0).

38. Remove A/C diode A from the under-hood fuse/relay box.

39. Using the diode setting (⊸|◀⊸) on a DVOM, check for current flow in both directions between the A/C diode A terminals No. 1 and No. 2.

A/C DIODE A

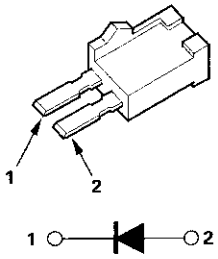

Is there current flow in only one direction?

YES—Go to step 40.

NO—Replace A/C diode A.■

40. Turn the ignition switch to ON (II).

41. Measure the voltage between A/C diode A 2P socket terminal No. 2 and body ground.

A/C DIODE A 2P SOCKET

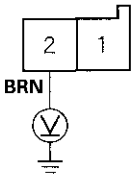

Is there battery voltage?

YES—Replace the under-hood fuse/relay box (see page 22-59).■

NO—Repair open in the wire between the No. 36 (10 A) fuse in the under-dash fuse/relay box and A/C diode A.■

A/C Condenser Fan High Speed Circuit Troubleshooting

NOTE:
- Do not use this troubleshooting procedure if the A/C compressor is inoperative. Refer to the symptom troubleshooting index.
- If A/C refrigerant pressure is abnormal, the radiator fans are controlled based on engine coolant temperature (see page 21-29).
- Before doing symptom troubleshooting, check for powertrain DTCs (see page 11-3).

1. Check the No. 6 (20 A) and No. 15 (7.5 A) fuses in the under-hood fuse/relay box.

   Are the fuses OK?

   YES—Go to step 2.

   NO—Replace the fuses, and recheck. If either fuse blows again, check for a short in the No. 6 (20 A) and No. 15 (7.5 A) fuse circuits. ■

2. Remove the A/C condenser fan relay from the under-hood fuse/relay box, and test it (see page 22-64).

   Is the relay OK?

   YES—Go to step 3.

   NO—Replace the A/C condenser fan relay. ■

3. Measure the voltage between A/C condenser fan relay 4P socket terminal No. 1 and body ground.

A/C CONDENSER FAN RELAY 4P SOCKET

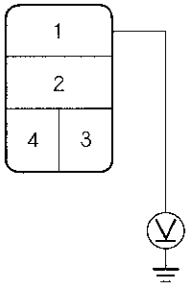

Terminal side of female terminals

Is there battery voltage?

YES—Go to step 4.

NO—Replace the under-hood fuse/relay box (see page 22-59). ■

4. Connect A/C condenser fan relay 4P socket terminals No. 1 and No. 2 with a jumper wire.

A/C CONDENSER FAN RELAY 4P SOCKET

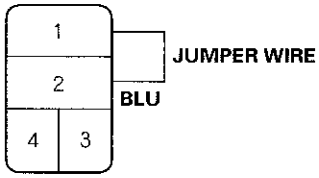

Terminal side of female terminals

Does the A/C condenser fan run on high?

YES—Go to step 5.

NO—Replace the under-hood fuse/relay box (see page 22-59). ■

5. Disconnect the jumper wire.

6. Turn the ignition switch to ON (II).

7. Measure the voltage between A/C condenser fan relay 4P socket terminal No. 4 and body ground.

A/C CONDENSER FAN RELAY 4P SOCKET

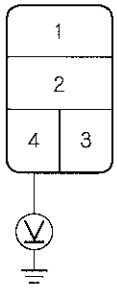

Terminal side of female terminals

Is there battery voltage?

YES—Go to step 8.

NO—Go to step 14.

8. Turn the ignition switch to LOCK (0).

9. Reinstall the A/C condenser fan relay.

10. Jump the SCS line with the HDS.

    NOTE: This step must be done to protect the powertrain control module (PCM) from damage.

11. Disconnect PCM connector A (44P).

12. Connect the PCM connector A (44P) terminal No. 5 to body ground with a jumper wire.

PCM CONNECTOR A (44P)

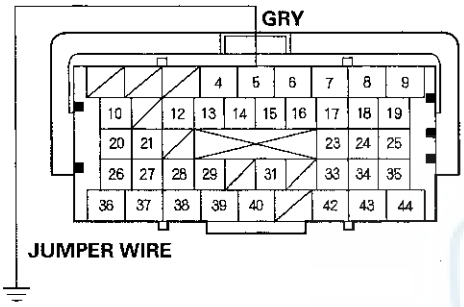

Terminal side of female terminals

13. Turn the ignition switch to ON (II).

    Does the A/C condenser fan run on high?

    YES—Check for loose wires or poor connections at PCM connector A (44P) terminal No. 5. If the connections are good, substitute a known-good PCM (see page 11-7), and recheck. If the symptom/indication goes away, replace the original PCM (see page 11-238). ■

    NO—Repair open in the wire between the A/C condenser fan relay and the PCM. ■

14. Remove the A/C diode B from the under-hood fuse/relay box.

15. Turn the ignition switch to ON (II).

16. Measure the voltage between the A/C diode B 2P socket terminal No. 2 and body ground.

A/C DIODE B 2P SOCKET

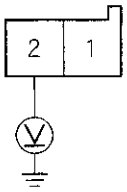

Is there battery voltage?

YES—Go to step 17.

NO—Replace the under-hood fuse/relay box (see page 22-59). ■

17. Using the diode setting (⊸◀⊸) on a DVOM, check for current flow in both directions between the A/C diode B terminals No. 1 and No. 2.

A/C DIODE B

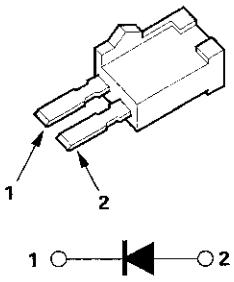

Is there current flow in only one direction?

YES—Replace the under-hood fuse/relay box (see page 22-59). ■

NO—Replace the A/C diode B. ■

A/C Compressor Clutch Circuit Troubleshooting

NOTE:
- It is normal for the A/C compressor to turn off under certain conditions, such as low idle, high engine coolant temperature, or hard acceleration.
- Do not use this troubleshooting procedure if the fans are also inoperative with the A/C on. Refer to the symptom troubleshooting index.
- Before doing any symptom troubleshooting, check for powertrain DTCs (see page 11-3).

1. Check the No. 20 (7.5 A) fuse in the under-hood fuse/relay box, and the No. 36 (10 A) fuse in the under-dash fuse/relay box.

   Are the fuses OK?

   YES—Go to step 2.

   NO—Replace the fuses and recheck. If either fuse blows again, check for a short in the No. 20 (7.5 A) and No. 36 (10 A) fuse circuits.■

2. Connect the HDS to the DLC.

3. Start the engine.

4. Turn on the A/C.

5. Using the HDS, confirm the following values in the PGM-FI Data List at idle.

ECT Sensor 2	198—212 °F (92—100 °C)
TP Sensor	About 0.5 V at idle
RPM	More than 770
A/C Switch	ON
A/C Clutch	ON
A/C Pressure Sensor	196—455 kPa (28—455 psi)

   Are all the values within specifications?

   YES—Go to step 6.

   NO—Troubleshoot the value that is not within the specifications.■

6. Turn the ignition switch to LOCK (0).

7. Remove the A/C compressor clutch relay from the under-hood fuse/relay box, and test it (see page 22-64).

   Is the relay OK?

   YES—Go to step 8.

   NO—Replace the A/C compressor clutch relay.■

8. Measure the voltage between the A/C compressor clutch relay 4P socket terminal No. 1 and body ground.

A/C COMPRESSOR CLUTCH RELAY 4P SOCKET

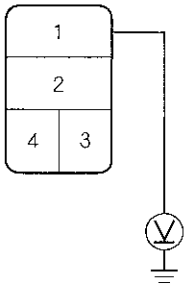

Terminal side of female terminals

Is there battery voltage?

YES—Go to step 9.

NO—Replace the under-hood fuse/relay box (see page 22-59).■

9. Connect A/C compressor clutch relay 4P socket terminals No. 1 and No. 2 with a jumper wire.

A/C COMPRESSOR CLUTCH RELAY 4P SOCKET

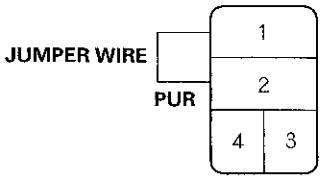

Terminal side of female terminals

Does the A/C compressor clutch click?

YES—Go to step 10.

NO—Go to step 19.

10. Disconnect the jumper wire.

11. Turn the ignition switch to ON (II).

12. Measure the voltage between A/C compressor clutch relay 4P socket terminal No. 3 and body ground.

A/C COMPRESSOR CLUTCH RELAY 4P SOCKET

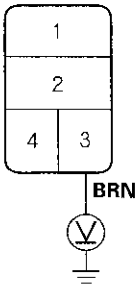

Terminal side of female terminals

Is there battery voltage?

YES—Go to step 13.

NO—Repair open in the wire between the No. 36 (10 A) fuse in the under-dash fuse/relay box and the A/C compressor clutch relay. ■

13. Turn the ignition switch to LOCK (0).

14. Reinstall the A/C compressor clutch relay.

15. Jump the SCS line with the HDS.

NOTE: This step must be done to protect the powertrain control module (PCM) from damage.

16. Disconnect PCM connector A (44P).

17. Connect PCM connector A (44P) terminal No. 14 to body ground with a jumper wire.

PCM CONNECTOR A (44P)

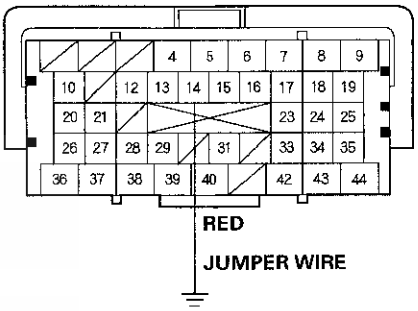

Terminal side of female terminals

18. Turn the ignition switch to ON (II).

Does the A/C compressor click?

YES—Check for loose wires or poor connections at PCM connector A (44P). If the connections are good, check the PCM grounds. If the grounds are good, substitute a known-good PCM (see page 11-7), and recheck. If the symptom/indication goes away, replace the original PCM (see page 11-238). ■

NO—Repair open in the wire between the A/C compressor clutch relay and the PCM. ■

(cont'd)

A/C Compressor Clutch Circuit Troubleshooting (cont'd)

19. Disconnect the jumper wire.

20. Disconnect the A/C compressor clutch 3P connector.

21. Check for continuity between A/C compressor clutch relay 4P socket terminal No. 2 and A/C compressor clutch 3P connector terminal No. 2.

A/C COMPRESSOR CLUTCH RELAY 4P SOCKET
Terminal side of female terminals

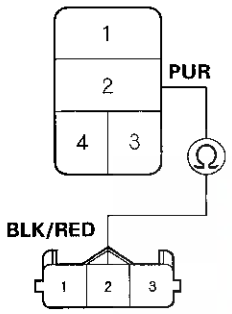

A/C COMPRESSOR CLUTCH 3P CONNECTOR
Wire side of female terminals

Is there continuity?

YES—Check the A/C compressor clutch clearance, and the compressor clutch field coil (see page 21-113). Repair as needed. ■

NO—Repair open in the wire between the A/C compressor clutch relay and the A/C compressor clutch. ■

A/C Signal Circuit Troubleshooting

NOTE:
- Do not use this troubleshooting procedure if any of the following items are operative: A/C condenser fan, radiator fan, A/C compressor. Refer to the symptom troubleshooting index.
- Do not use this troubleshooting procedure if the A/C system pressure is abnormal (see page 21-29).
- Before doing symptom troubleshooting, check for powertrain DTCs (see page 11-3).

1. Connect the HDS to the DLC.

2. Start the engine.

3. Turn on the A/C.

4. Check the A/C switch in the PGM-FI Data List with the HDS.

   Is the A/C switch on?

   YES—The A/C signal is OK at this time.

   NO—Go to step 5.

5. Turn the ignition switch to LOCK (0).

6. Disconnect the climate control unit connector A (32P).

7. Measure the evaporator temperature sensor resistance between climate control unit connector A (32P) terminals No. 8 and No. 19.

CLIMATE CONTROL UNIT CONNECTOR A (32P)

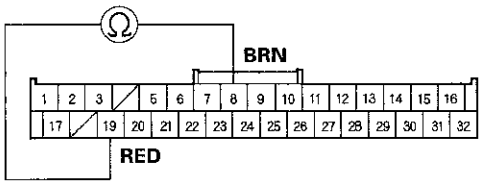

Wire side of female terminals

Is the resistance less than 24 kΩ ?

YES—Go to step 8.

NO—Test the evaporator temperature sensor (see page 21-90). ■

8. Reconnect climate control unit connector A (32P).

9. Turn the ignition switch to ON (II).

10. Check that the blower motor operates at all speeds.

    Does the blower motor operate at all speeds?

    YES—Go to step 11.

    NO—Repair the problem in the blower motor circuit.■

11. Turn the ignition switch to LOCK (0).

12. Disconnect climate control unit connector A (32P).

13. Turn the ignition switch to ON (II).

14. Measure the voltage between climate control unit connector A (32P) terminal No. 6 and body ground.

CLIMATE CONTROL UNIT CONNECTOR A (32P)

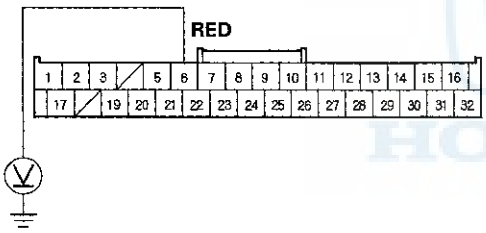

Wire side of female terminals

Is there battery voltage?

YES—Go to step 15.

NO—Repair open in the wire between the climate control unit and MICU.■

15. Turn the ignition switch to LOCK (0).

16. Reconnect climate control unit connector A (32P).

17. Set the A/C button and fan control switch ON, then turn the ignition switch to ON (II).

18. Measure the voltage between climate control unit connector A (32P) terminal No. 6 and body ground.

CLIMATE CONTROL UNIT CONNECTOR A (32P)

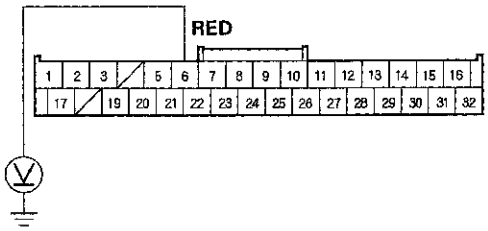

Wire side of female terminals

Is there 0.5 V or less?

YES—Replace the MICU (see page 22-60).■

NO—Check for loose wires or poor connections at climate control unit connector A (32P). If the connections are good, substitute a known-good climate control unit and recheck. If the symptom/indication goes away, replace the original climate control unit.■

A/C Compressor Driver Power Circuit Troubleshooting

NOTE:
- Put on gloves to protect your hands from electrical shock.
- IMA components are located in this area. The IMA is a high-voltage system. You must be familiar with the IMA system before working on or around it. Make sure you have read the IMA service precautions before doing repairs or service (see page 12-3).

1. Check the No. 22 (7.5 A) fuse in the under-dash fuse/relay box.

   Is the fuse OK?

   YES—Go to step 2.

   NO—Replace the fuse and recheck. If the fuse blows again, check for a short in the No. 22 (7.5 A) fuse circuit. ■

2. Disconnect the A/C compressor driver 4P connector.

3. Turn the ignition switch to ON (II).

4. Measure the voltage between the A/C compressor driver 4P connector terminal No. 4 and body ground.

A/C COMPRESSOR DRIVER 4P CONNECTOR

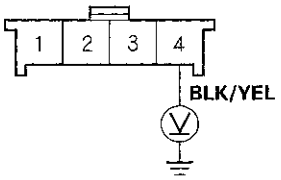

Wire side of female terminals

Is there battery voltage?

YES—Check for loose wires or poor connections at A/C compressor driver 4P connector. If the connections are good, substitute a known-good A/C compressor driver, and recheck. If the symptom/indication goes away, replace the A/C compressor driver. ■

NO—Repair open in the wire between the No. 22 (7.5 A) fuse in the under-dash fuse/relay box and the A/C compressor driver. ■

Humidity/In-car Temperature Sensor Test

Humidity Sensor Test

1. Remove the humidity/in-car temperature sensor (see page 21-90).

2. Turn the ignition switch to ON (II). Measure the voltage between the terminals with the (+) probe on terminal No. 3 and the (—) probe on terminal No. 2 with the connector connected.

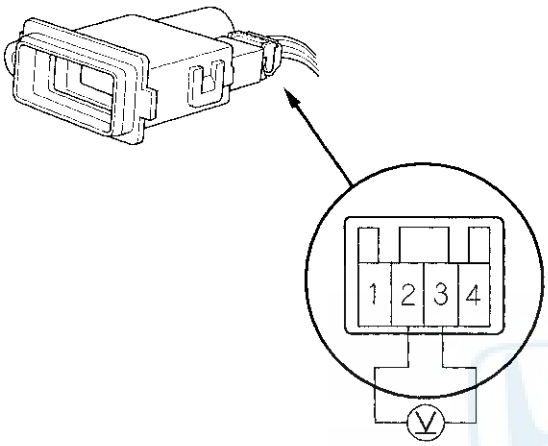

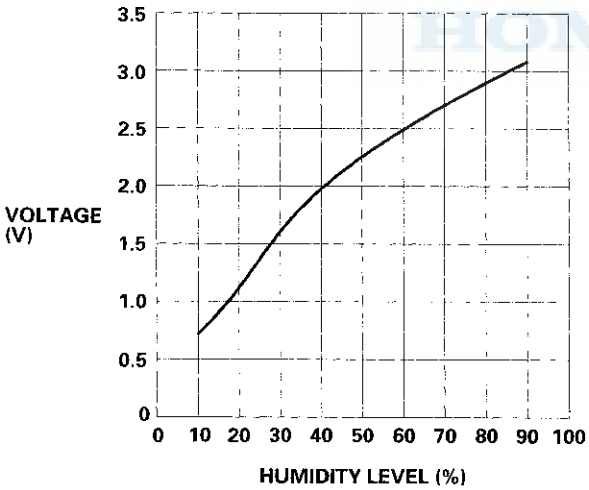

3. If the voltage is not as specified, replace the humidity/in-car temperature sensor (see page 21-90).

In-car Temperature Sensor Test

1. Remove the humidity/in-car temperature sensor (see page 21-90).

2. Test the humidity/in-car temperature sensor while holding it in front of the dashboard center vent.

   - Measure the resistance with the system set to Max Cool.
   - Measure the resistance with the system set to Max Hot.

3. Compare the resistance reading between terminals No. 1 and No. 2 of the humidity/in-car temperature sensor with the specifications shown in the graph; the resistance should be within the specifications.

HUMIDITY/IN-CAR TEMPERATURE SENSOR

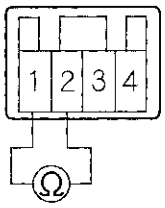

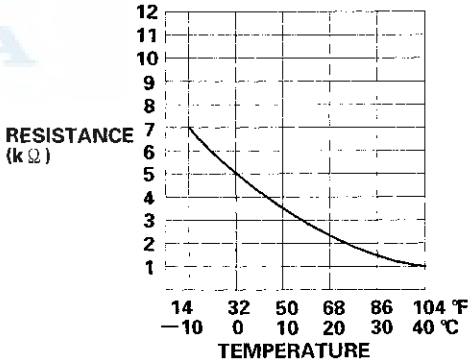

4. If the resistance is not as specified, replace the humidity/in-car temperature sensor (see page 21-90).

Humidity/In-car Temperature Sensor Replacement

1. Remove the center panel:
   - '06-08 models with navigation (see page 23-143)
   - '06-08 models without navigation (see page 23-70)
   - '09 model with navigation (see page 23-330)
   - '09 model without navigation (see page 23-232)
2. Remove the self-tapping screw and the humidity/in-car temperature sensor (A) from the center panel (B).

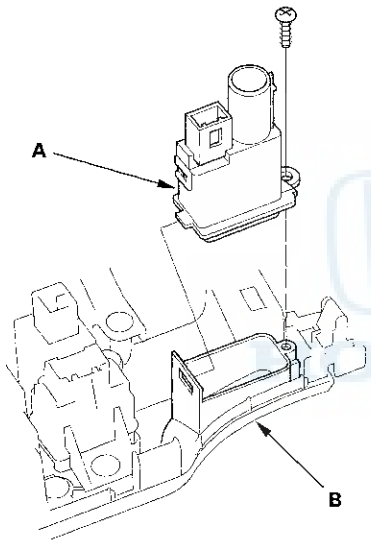

3. Install the sensor in the reverse order of removal. Be sure to connect the air hose securely.

Evaporator Temperature Sensor Test

1. Remove the evaporator core and the evaporator temperature sensor (see page 21-101).
2. Dip the sensor in ice water, and measure the resistance between its terminals.

EVAPORATOR TEMPERATURE SENSOR

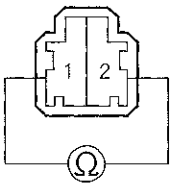

Terminal side of male terminals

3. Pour warm water on the sensor, and check for a change in resistance.
4. Compare the resistance readings with the specifications shown in the graph; the resistance should be within the specifications.

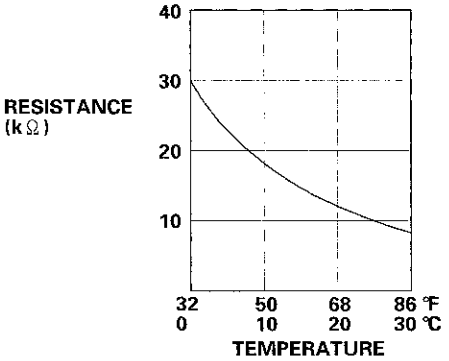

5. If the resistance is not as specified, replace the evaporator temperature sensor (see page 21-101).

Outside Air Temperature Sensor Test

1. Remove the outside air temperature sensor (see page 21-91).

2. Dip the sensor in ice water, and measure the resistance. Then pour warm water on the sensor, and check for a change in resistance.

3. Compare the resistance reading between terminals No. 1 and No. 2 of the outside air temperature sensor with the specifications shown in the graph; the resistance should be within the specifications.

OUTSIDE AIR TEMPERATURE SENSOR

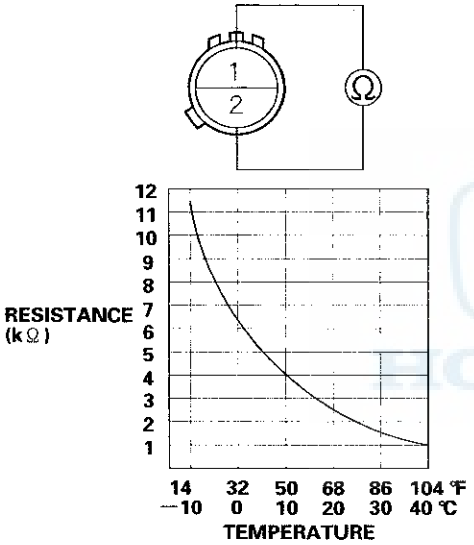

4. If the resistance is not as specified, replace the outside air temperature sensor (see page 21-91).

Outside Air Temperature Sensor Replacement

1. Remove the front bumper (see page 20-122).

2. Lift the tab (A) to release the lock, then remove the outside air temperature sensor (B) from the receiver/dryer desiccant bracket. Disconnect the 2P connector (C) from the outside air temperature sensor.

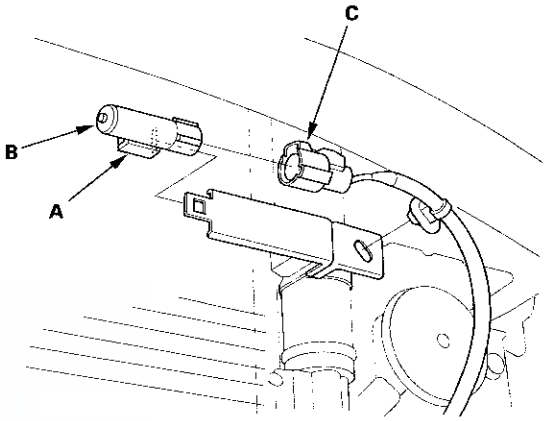

3. Install the sensor in the reverse order of removal.

Sunlight Sensor Test

1. Remove the sunlight sensor (A) from the dashboard (see page 21-92).

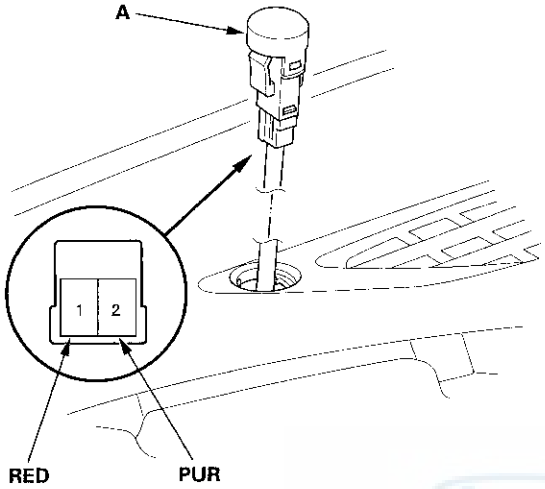

2. Turn the ignition switch to ON (II). Measure the voltage between the terminals with the (+) probe on terminal No. 2 and the (−) probe on terminal No. 1 with the connector connected.

   NOTE: The voltage readings will not change under the light of a flashlight or a fluorescent lamp.

   Voltage should be:
   - 3.6—3.7 V or more with the sensor out of direct sunlight.
   - 3.3—3.5 V or less with the sensor in direct sunlight.

3. If the voltage is not as specified, replace the sunlight sensor (see page 21-92).

Sunlight Sensor Replacement

1. Remove the gauge control module (SPEEDO) (see page 22-255).

2. Remove the sunlight sensor (A) from the dashboard by pushing up on the bottom of the sensor with a flat-tip screwdriver or similar tool, then disconnect the connector (B). Be careful not to damage the sensor and the dashboard.

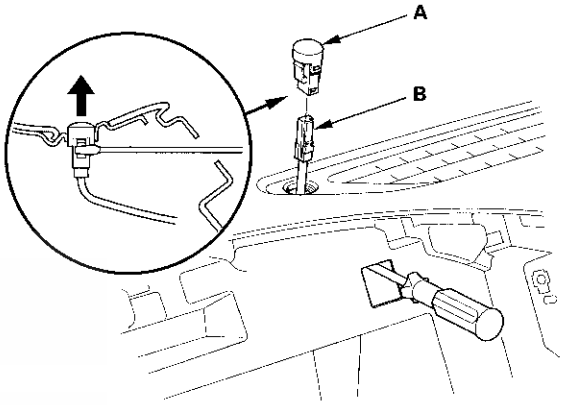

3. Install the sensor in the reverse order of removal.

Heater Core Temperature Sensor Test

1. Remove the heater core temperature sensor (see page 21-93).

2. Dip the sensor in ice water, and measure the resistance between its terminals.

HEATER CORE TEMPERATURE SENSOR

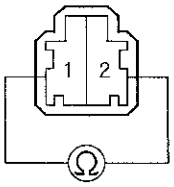

Terminal side of male terminals

3. Then pour warm water on the sensor, and check for a change in resistance.

4. Compare the resistance readings with the specifications shown in the graph; the resistance should be within the specifications.

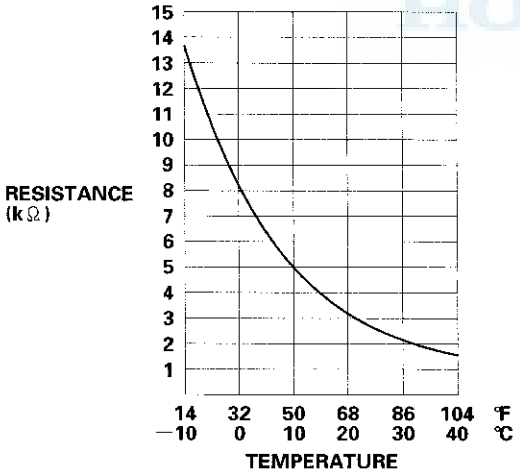

5. If the resistance is not as specified, replace the heater core temperature sensor (see page 21-93).

Heater Core Temperature Sensor Replacement

1. Remove the driver's dashboard undercover (see page 20-90).

2. Remove the center console (see page 20-79).

3. Remove the accelerator pedal module (see page 11-277).

4. Disconnect the connectors (A) from the air mix control motor and heater core temperature sensor, then remove the harness clip (B) and the connector clip (C). Remove the self-tapping screws and the heater core cover (D).

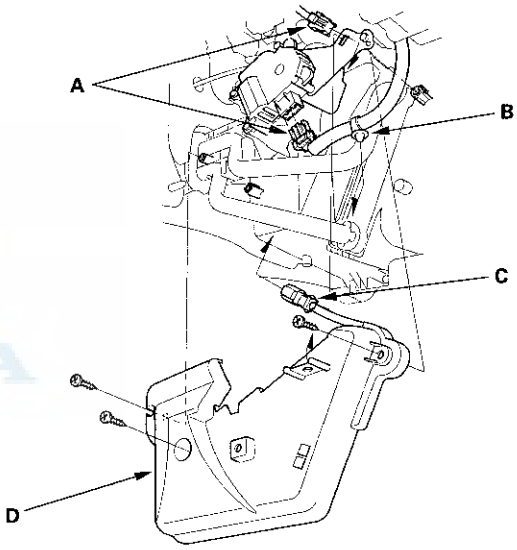

5. Remove the heater core sensor (A).

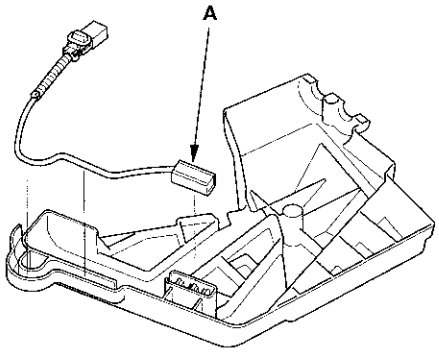

6. Install the sensor in the reverse order removal.

Power Transistor Test

1. Remove the passenger's dashboard undercover (see page 20-91).

2. Disconnect the 4P connector from the power transistor.

3. Measure the resistance between terminals No. 3 and No. 4 of the power transistor. It should be about 1.5 kΩ.

   - If the resistance is within the specifications, go to step 4.
   - If the resistance is not within the specifications, replace the power transistor.

   NOTE: Also check the blower motor. Power transistor failure can be caused by a defective blower motor.

POWER TRANSISTOR

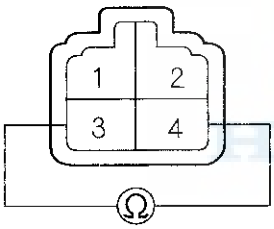

4. Carefully release the lock tab on the terminal No. 1 (YEL) (A) in the 4P connector, then remove the terminal and insulate it from body ground.

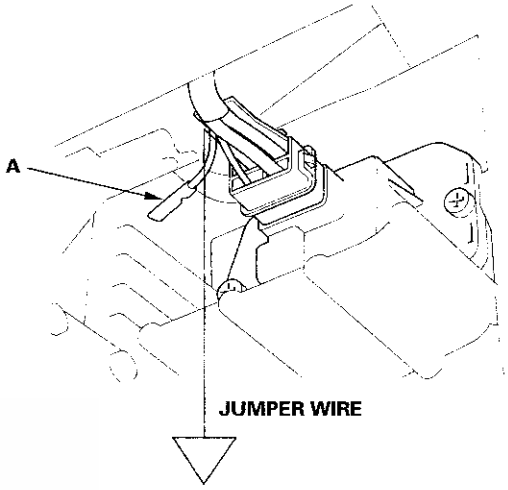

5. Reconnect the 4P connector to the power transistor.

6. Make sure the YEL wire is completely isolated, then supply 12 V to the cavity No. 1 with a jumper wire.

7. Turn the ignition switch to ON (II), and check that the blower motor runs.

   - If the blower motor does not run, replace the power transistor.

     NOTE: A faulty blower motor can cause the power transistor to fail. If the power transistor is replaced, also check the blower motor for binding, and replace it if necessary.

   - If the blower motor runs, the power transistor is OK.

Air Mix Control Motor Test

NOTE: Before testing, check for HVAC DTCs (see page 21-10).

1. Disconnect the 7P connector from the air mix control motor.

   NOTICE
   Incorrectly applying power and ground to the air mix control motor will damage it. Follow the instructions carefully.

2. Connect battery power to terminal No. 1 of the air mix control motor, and ground terminal No. 2; the air mix control motor should run, and stop at Max Hot. If it doesn't, reverse the connections; the air mix control motor should run, and stop at Max Cool. When the air mix control motor stops running, disconnect battery power immediately.

AIR MIX CONTROL MOTOR

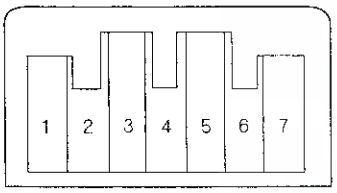

3. If the air mix control motor did not run in step 2, remove it, then check the air mix control linkage and door for smooth movement.

   - If the linkage and door move smoothly, replace the air mix control motor (see page 21-95).
   - If the linkage or door sticks or binds, repair them as needed.
   - If the air mix control motor runs smoothly, go to step 4.

4. Measure the resistance between terminals No. 5 and No. 7. It should be between 4.2 to 7.8 kΩ.

5. Reconnect the air mix control motor 7P connector, then turn the ignition switch to ON (II).

6. Using the backprobe set, measure the voltage between terminals No. 3 and No. 7.

   Max Cool: About 0.5 V
   Max Hot: About 4.5 V

7. If either the resistance or the voltage readings are not as specified, replace the air mix control motor (see page 21-95).

Air Mix Control Motor Replacement

1. Remove the driver's dashboard undercover (see page 20-90).

2. Disconnect the 7P connector (A) from the air mix control motor (B). Remove the self-tapping screws and the air mix control motor from the heater unit.

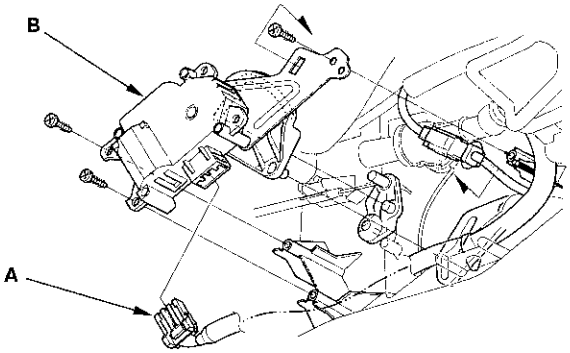

3. Install the motor in the reverse order of removal. Make sure the pin on the motor is properly engaged with the linkage. After installation, make sure the motor runs smoothly.

Mode Control Motor Test

NOTE: Before testing, check for HVAC DTCs (see page 21-10).

1. Disconnect the 7P connector from the mode control motor.

   NOTICE
   Incorrectly applying power and ground to the mode control motor will damage it. Follow the instructions carefully.

2. Connect battery power to terminal No. 1 of the mode control motor, and ground terminal No. 2 terminal; the mode control motor should run smoothly, and stop at Vent. If it doesn't, reverse the connections; the mode control motor should run smoothly, and stop at Defrost. When the mode control motor stops running, disconnect battery power immediately.

MODE CONTROL MOTOR

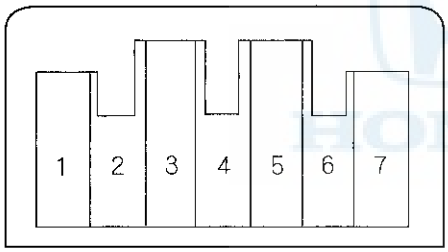

3. If the mode control motor did not run in step 2, remove it, then check the mode control linkage and doors for smooth movement.
   - If the linkage and doors move smoothly, replace the mode control motor (see page 21-96).
   - If the linkage or doors stick or bind, repair them as needed.
   - If the mode control motor runs smoothly, go to step 4.

4. Use a digital multimeter with an output of 1 mA or less at the 20 kΩ range. With the mode control motor running as in step 2, check for continuity between terminals No. 3, 4, 5, and No. 6 and terminal No. 7 individually. There should be continuity for a moment at each terminal as the motor moves through its travel.

5. If there is no continuity for a moment at each terminal, replace the mode control motor (see page 21-96).

Mode Control Motor Replacement

1. Remove the glove box (see page 20-91).

2. Remove the wire harness clip (A), the self-tapping screws, and the passenger's heater duct (B).

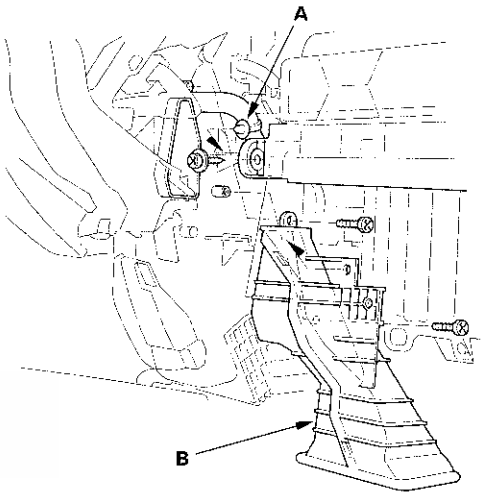

3. Disconnect the 7P connector (A) from the mode control motor (B). Remove the self-tapping screws and the mode control motor from the heater unit.

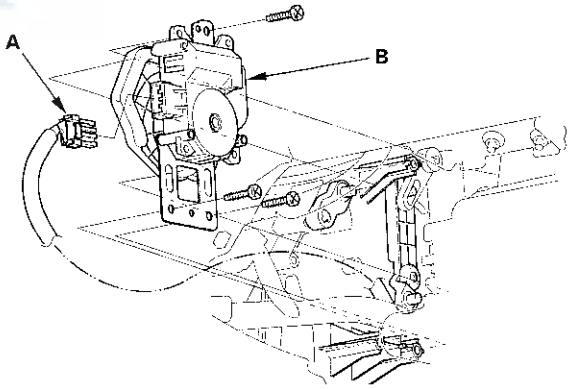

4. Install the motor in the reverse order of removal. Make sure the pin on the motor is properly engaged with the linkage. After installation, make sure the motor runs smoothly.

Recirculation Control Motor Test

NOTE: Before testing, check for HVAC DTCs (see page 21-10).

1. Disconnect the 7P connector from the recirculation control motor.

   NOTICE
   Incorrectly applying power and ground to the recirculation control motor will damage it. Follow the instructions carefully.

2. Connect battery power to terminal No. 1 of the recirculation control motor, and ground terminal No. 2; the recirculation control motor should run, and stop at Recirculate. If it doesn't, reverse the connections; the recirculation control motor should run, and stop at Fresh. When the recirculation control motor stops running, disconnect battery power immediately.

RECIRCULATION CONTROL MOTOR

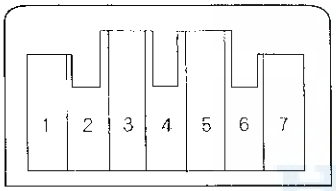

3. If the recirculation control motor did not run in step 2, remove it, then check the recirculation control linkage and door for smooth movement.

   - If the linkage and door move smoothly, replace the recirculation control motor (see page 21-97).
   - If the linkage or door sticks or binds, repair them as needed.
   - If the recirculation control motor runs smoothly, go to step 4.

4. Measure the resistance between terminals No. 5 and No. 7. It should be between 4.2 and 7.8 kΩ.

5. Reconnect the recirculation control motor 7P connector, then turn the ignition switch to ON (II).

6. Using the backprobe set, measure the voltage between terminals No. 3 and No. 7.

   Recirculate: About 4.0 V
   Fresh: About 1.0 V

7. If either the resistance or the voltage readings are not as specified, replace the recirculation control motor (see page 21-97).

Recirculation Control Motor Replacement

1. Remove the glove box (see page 20-91) and the passenger's kick panel (see page 20-54).

2. Disconnect the 7P connector (A) from the recirculation control motor (B). Remove the self-tapping screws and the recirculation control motor from the blower unit.

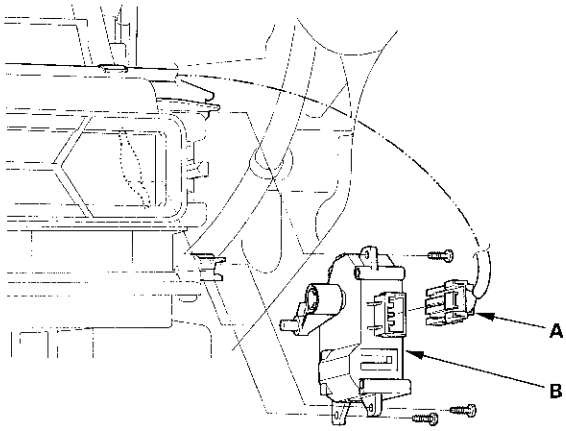

3. Install the motor in the reverse order of removal. Make sure the pin on the motor is properly engaged with the linkage. After installation, make sure the motor runs smoothly.

Climate Control Unit Removal/ Installation

1. Remove the center panel:
   - '06-08 models with navigation (see page 23-143)
   - '06-08 models without navigation (see page 23-70)
   - '09 model with navigation (see page 23-330)
   - '09 model without navigation (see page 23-232)
2. Remove the dials (A), the self-tapping screws, and the climate control unit (B).

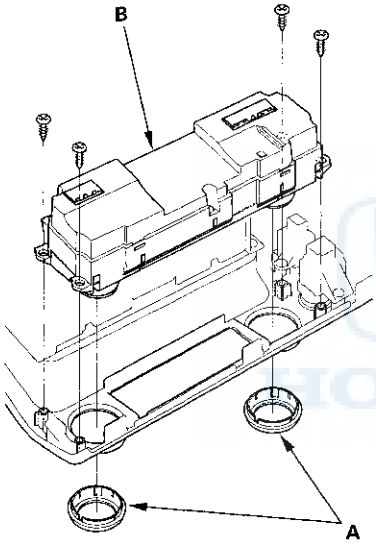

3. Install the control unit in the reverse order of removal. After installation, operate the various functions to see whether works properly.
4. Run the self-diagnostic function to confirm that there are no problems in the system (see page 21-11).

Climate Control Unit Bulb Replacement

1. Remove the climate control unit (see page 21-98).
2. Discharge the static electricity (which may have accumulated on you when you removed the climate control unit) by touching the door striker or another unpainted metal body part.
3. Remove the self-tapping screws, then carefully separate the climate control unit display (A) from the control unit (B). Do not kink or pull on the wires between the display and the control panel. Do not touch the electronic components on the printed circuit board in the control panel.

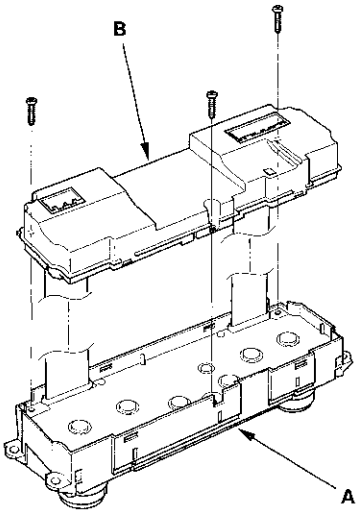

4. Remove the bulbs with a flat-tip screwdriver.

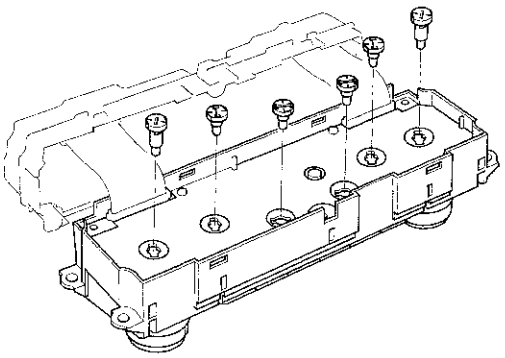

5. Install the bulbs in the reverse order of removal.

Dust and Pollen Filter Replacement

1. Open the glove box. Remove the glove box stop on each side, then let the glove box hang down (see page 20-91).

2. Remove the dust and pollen filter assembly (A) from the blower unit.

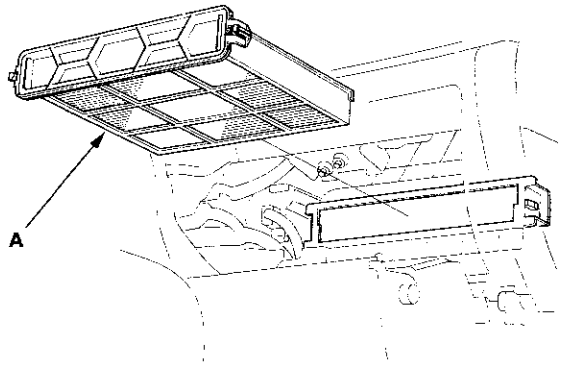

3. Remove the filter (A) from the housing (B), and replace the filter.

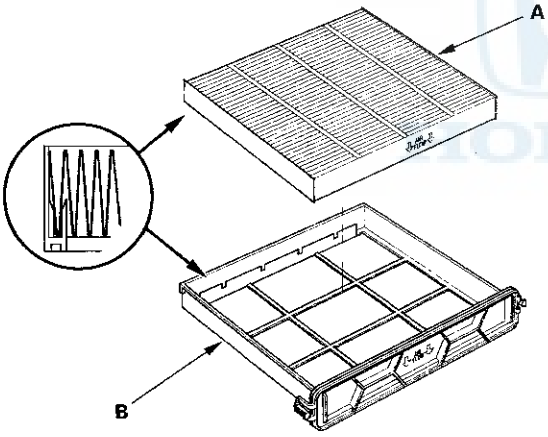

4. Install the filter in the reverse order of removal. Make sure that there is no air leaking out of the blower unit.

Blower Unit Removal/Installation

1. Remove the glove box (see page 20-91).

2. Cut the plastic cross brace (A) in the glove box opening with diagonal cutters in the area shown, and discard it.

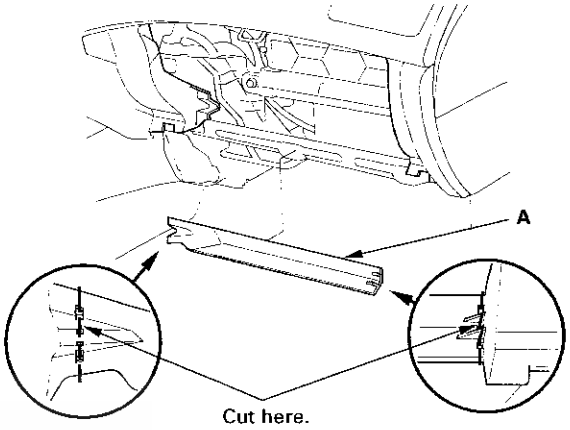

3. Remove the bolts and the glove box frame (A).

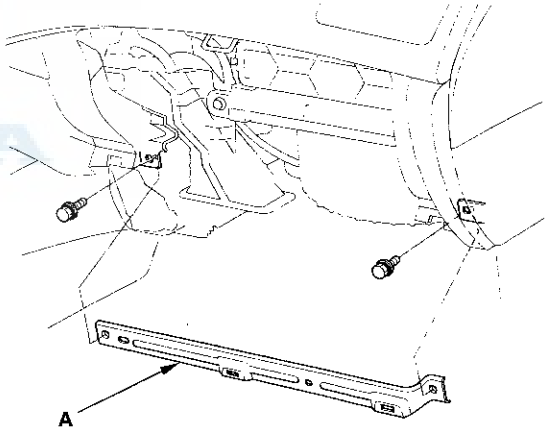

(cont'd)

Blower Unit Removal/Installation (cont'd)

4. Remove the wire harness clip (A), the self-tapping screws, and the passenger's heater duct (B).

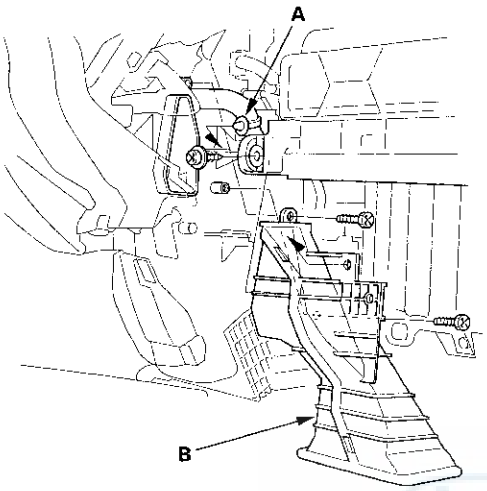

5. Disconnect the connector (A) from the blower motor. Remove the wire harness clip (B).

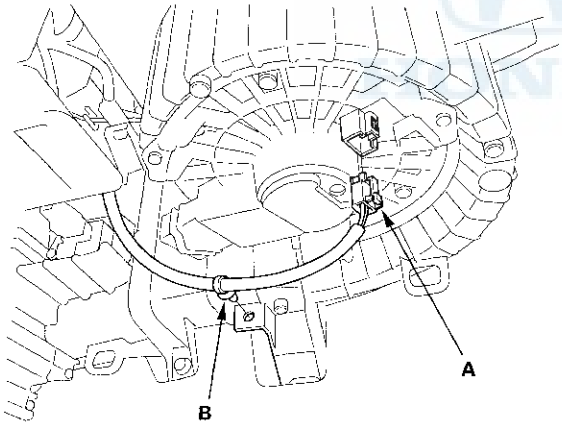

6. Disconnect the connector (A) from the recirculation control motor. Remove the self-tapping screws, the bolt, the mounting nuts, and the blower unit (B).

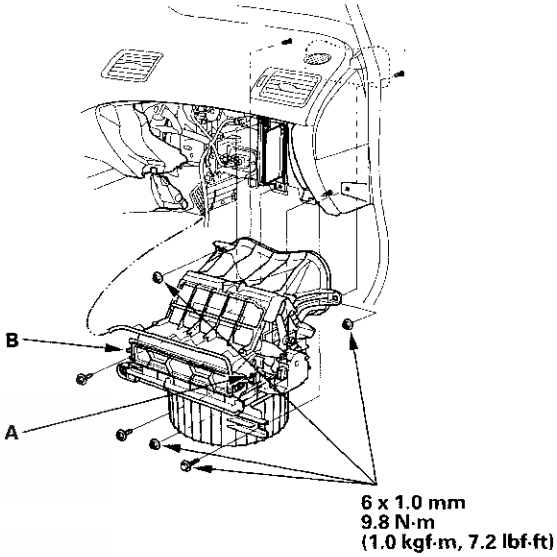

7. Install the unit in the reverse order of removal. Make sure that there is no air leakage.

Blower Unit Component Replacement

Note these items when overhauling the blower unit:

- The recirculation control motor (A), the blower motor (B), and the dust and pollen filter (C) can be replaced without removing the blower unit.
- Before reassembly, make sure that the recirculation control linkage and door move smoothly without binding.
- After reassembly, make sure the recirculation control motor runs smoothly (see page 21-97).

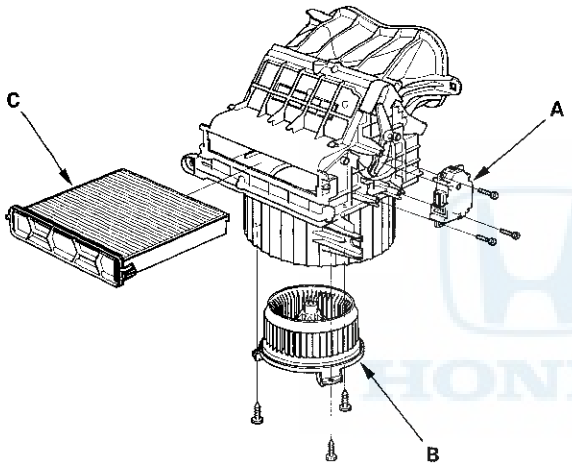

Evaporator Core Replacement

1. Recover the refrigerant with a recovery/recycling/charging station (see page 21-120).

2. Remove the bolt.

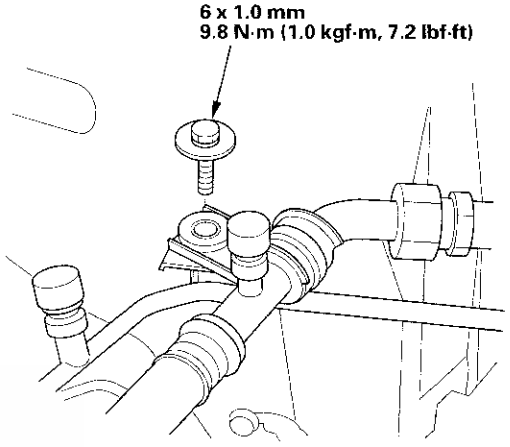

3. Remove the nut, then disconnect the A/C lines (A) from the evaporator core.

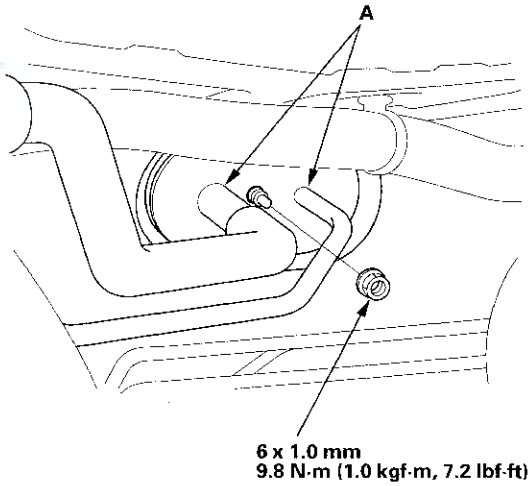

(cont'd)

Evaporator Core Replacement (cont'd)

4. Remove the stud bolt.

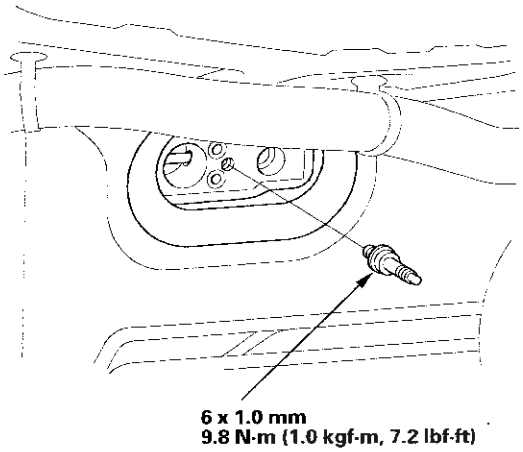

5. Remove the blower unit (see page 21-99).

6. Disconnect the connectors (A) from the evaporator temperature sensor and the power transistor, then remove the connector clip (B). Remove the self-tapping screws, the expansion valve cover (C), and the seal (D).

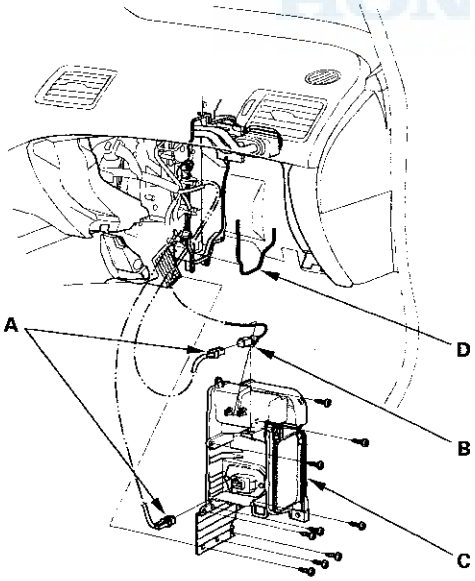

7. Carefully pull out the evaporator core (A) without bending the lines, then remove the plate (B).

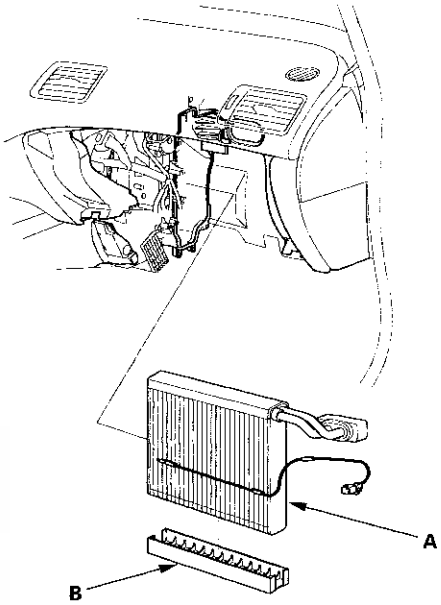

8. Remove the clips (A) and the evaporator temperature sensor (B).

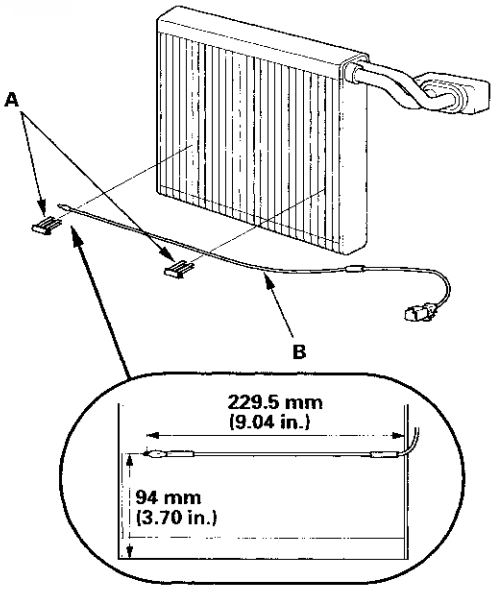

9. Install the core in the reverse order of removal, and note these items:

   - If you're installing a new evaporator core, add (POE) refrigerant oil (SANDEN SE-10Y). Using the wrong refrigerant oil can be a safety hazard (see page 21-7).
   - Replace the O-rings with new ones at each fitting, and apply a thin coat of refrigerant oil before installing them. Be sure to use the correct O-rings for HFC-134a (R-134a) to avoid leakage.
   - Immediately after using the oil, dispose of any remaining oil in the container, due to moisture absorption and short shelf life.
   - Do not spill the refrigerant oil on the vehicle; it may damage the paint; if the refrigerant oil contacts the paint, wash it off immediately.
   - Make sure that there is no air leakage.
   - Charge the system (see page 21-122).

Expansion Valve Replacement

1. Remove the evaporator core (see page 21-101).

2. Remove the bolts (A) and expansion valve (B).

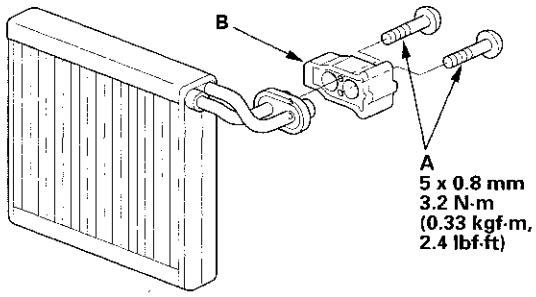

3. Install the expansion valve in the reverse order of removal, and note these items:

   - If you're installing a new expansion valve, add (POE) refrigerant oil (SANDEN SE-10Y). Using the wrong refrigerant oil can be a safety hazard (see page 21-7).
   - Replace the O-rings with new ones at each fitting, and apply a thin coat of refrigerant oil before installing them. Be sure to use the correct O-rings for HFC-134a (R-134a) to avoid leakage.
   - Immediately after using the oil, dispose of any remaining oil in the container, due to moisture absorption and short shelf life.
   - Do not spill the refrigerant oil on the vehicle; it may damage the paint; if the refrigerant oil contacts the paint, wash it off immediately.
   - Make sure that there is no air leakage.
   - Charge the system (see page 21-122).

Heater Unit/Core Replacement

SRS components are located in this area. Review the SRS component locations (see page 24-11) and the precautions and procedures (see page 24-13) before doing repair or servicing.

1. DO the battery terminal disconnection procedure (see page 22-62).

2. Disconnect the A/C lines from the evaporator core (see page 21-101).

3. Remove the air cleaner housing assembly (see page 11-370).

4. From under the hood, open the cable clamp (A), then disconnect the heater valve cable (B) from the heater valve arm (C). Turn the heater valve arm to the fully opened position as shown.

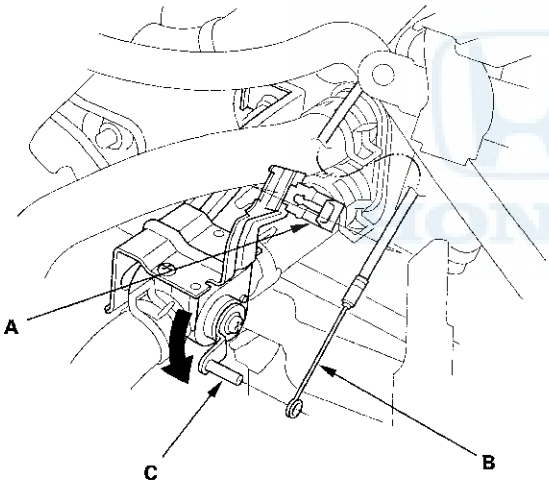

5. When the engine is cool, drain the engine coolant from the radiator (see page 10-6).

6. Slide the hose clamps (A) back. Remove the nut and the water valve (B), then disconnect the inlet heater hose (C) and the outlet heater hose (D) from the heater unit. Engine coolant will run out when the hoses are disconnected; drain it into a clean drip pan. Be sure not to let coolant spill on the electrical parts or the painted surfaces. If any coolant spills, rinse it off immediately.

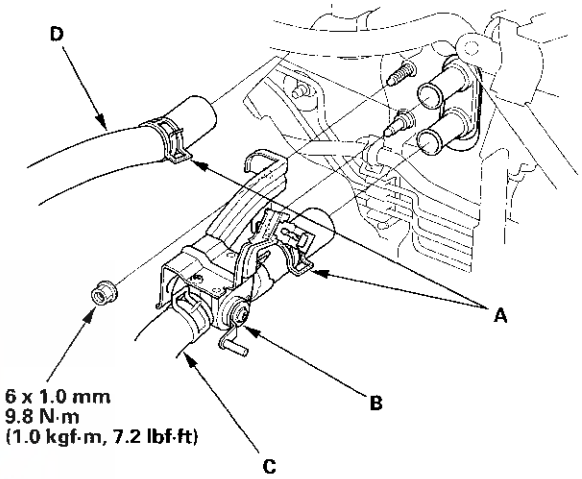

7. Remove the mounting nut from the heater unit. Take care not to damage or bend the fuel lines or brake lines, etc.

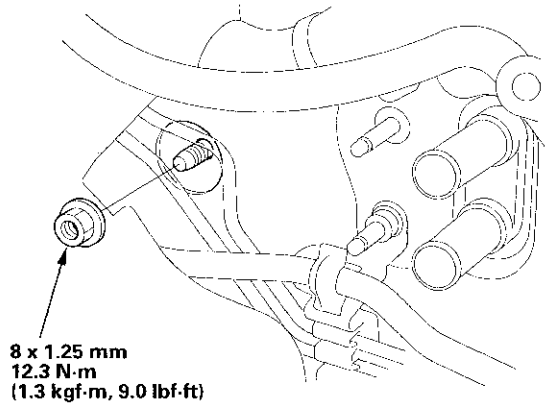

8. Remove the dashboard (see page 20-95).

9. Disconnect the connector (A) from the blower motor. Remove the wire harness clip (B).

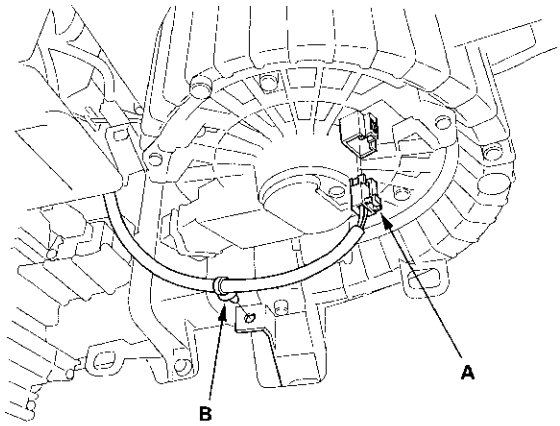

10. Disconnect the connector (A) from the recirculation control motor.

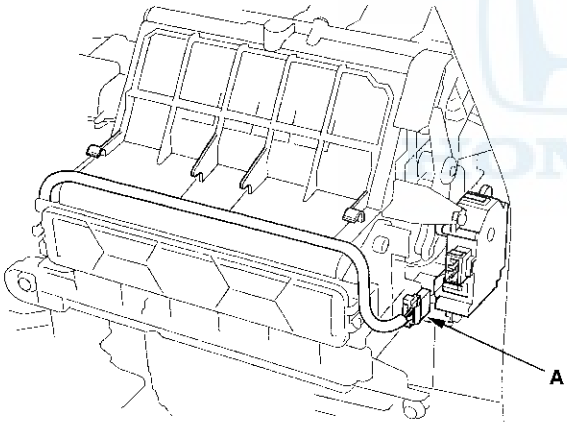

11. Disconnect the connectors (A) from the mode control motor, the evaporator temperature sensor, and the power transistor. Remove the wire harness clip (B).

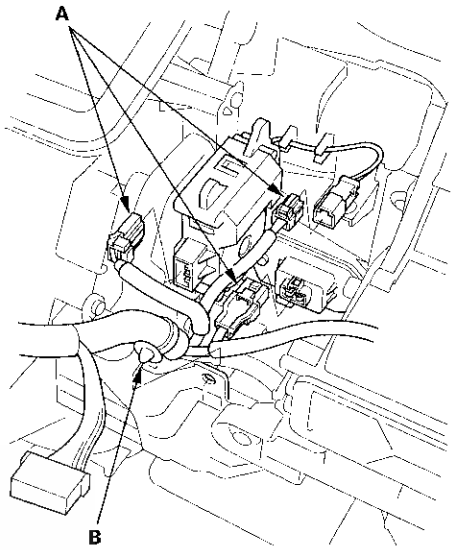

12. Disconnect the connectors (A) from the air mix control motor, the heater core temperature sensor, and the A/C wire harness. Remove the connector clip (B), the wire harness clips (C), and the wire harness (D).

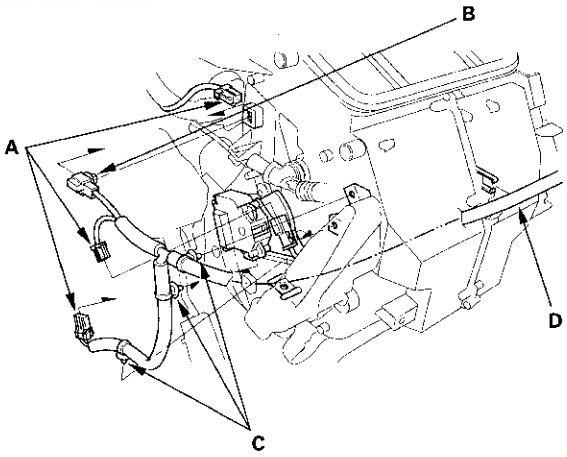

(cont'd)

Heater Unit/Core Replacement (cont'd)

13. Remove the mounting bolt, the mounting nuts, and the blower-heater unit (A).

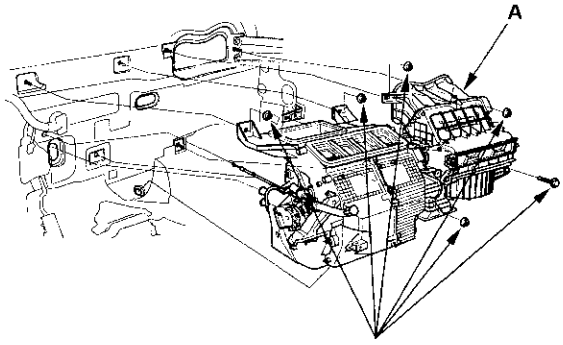

14. Remove the connector clip (A), the self-tapping screws, the heater core cover (B), and the grommet (C), then carefully pull out the heater core (D).

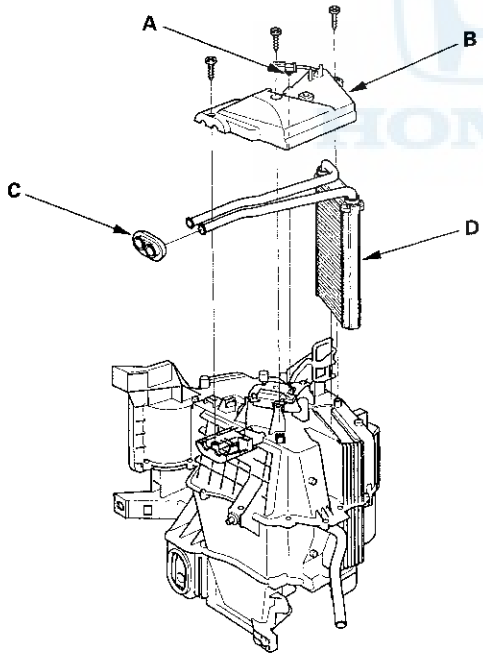

15. Install the heater core, and the evaporator core in the reverse order of removal.

16. Install the heater unit in the reverse order of removal, and note these items:

- Do not interchange the inlet and outlet heater hoses, and install the hose clamps securely.
- Refill the cooling system with engine coolant (see page 10-6).
- Adjust the heater valve cable (see page 21-107).
- Make sure that there is no coolant leakage.
- Make sure that there is no air leakage.
- Do the battery terminal reconnection procedure (see page 22-62).
- If the IMA battery level gauge (BAT) displays no segments, start the engine, and hold it between 3,500 rpm and 4,000 rpm without load (in Park or neutral) until the BAT displays at least three segments.

Heater Valve Cable Adjustment

1. From under the hood, open the cable clamp (A), then disconnect the heater valve cable (B) from the heater valve arm (C).

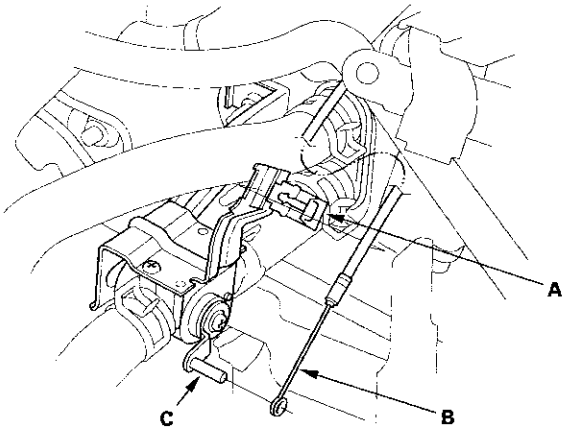

2. From under the dash, disconnect the heater valve cable housing from the cable clamp (A), and disconnect the heater valve cable (B) from the air mix control linkage (C).

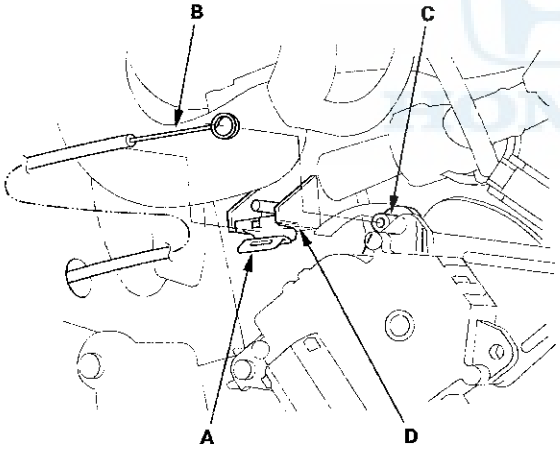

3. With the heater valve cable detached at both ends, make sure the cable moves freely with no binding. Replace the heater valve cable if it does not move freely.

4. Set the temperature control dial to Max Cool (Lo) with the ignition switch turned to ON (II).

5. Attach the heater valve cable (B) to the air mix control linkage (C) as shown step 2. Hold the end of the heater valve cable housing against the stop (D), then snap the heater valve cable housing into the cable clamp (A).

   NOTE: Make sure the ring-end of the cable is pushed all the way to the base of the pin on air mix control linkage.

6. From under the hood, turn the heater valve arm (A) to the fully closed position as shown, and hold it. Attach the heater valve cable (B) to the heater valve arm, and gently pull on the heater valve cable housing to take up any slack, then install the heater valve cable housing into the cable clamp (C).

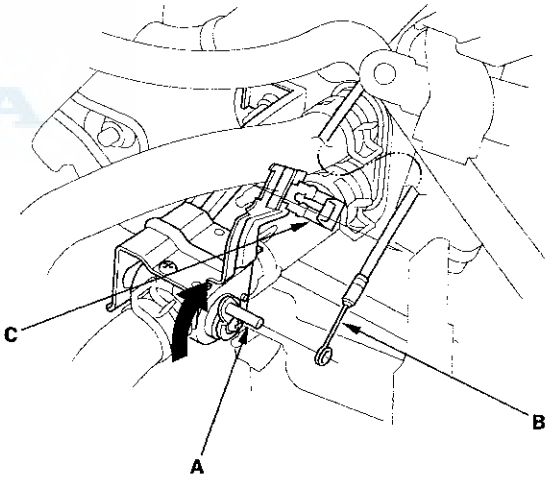

Auxiliary Electric Water Pump Replacement

1. When the engine is cool, drain engine coolant from the radiator (see page 10-6).

2. Remove the air cleaner housing assembly (see page 11-370).

3. Disconnect the connector (A). Slide the hose clamps (B) back, then disconnect the inlet heater hose (C) and the outlet heater hose (D). Remove the bolts and the auxiliary electric water pump (E).

   NOTE: Engine coolant will run out when the hoses are disconnected; drain into a clean drip pan. Be sure not to let coolant spill on the auxiliary electrical parts or the painted surfaces. If any coolant spills, rinse it off immediately.

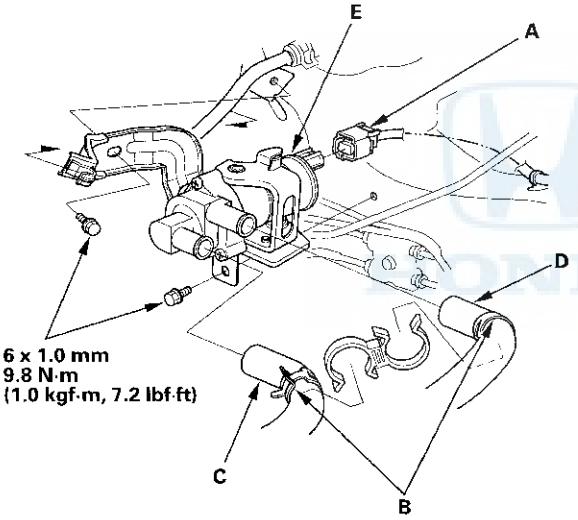

4. Remove the bolt, the upper bracket (A), the bushings (B), and the auxiliary electric water pump (C).

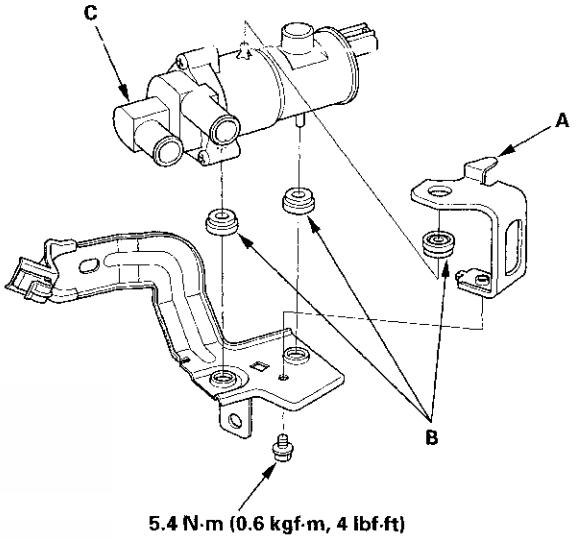

5. Install the pump in the reverse order of removal.

A/C Compressor Driver Removal/Installation

NOTE: Put on gloves to protect your hands from electrical shock.

IMA components are located in this area. The IMA is a high-voltage system. You must be familiar with the IMA system before working on or around it. Make sure you have read the IMA service precautions before doing repairs or service (see page 12-3).

1. Remove the IPU lid (see page 12-180).
2. Disconnect the DC-DC converter (see page 12-182).
3. Disconnect the connectors (A) from the A/C compressor driver.

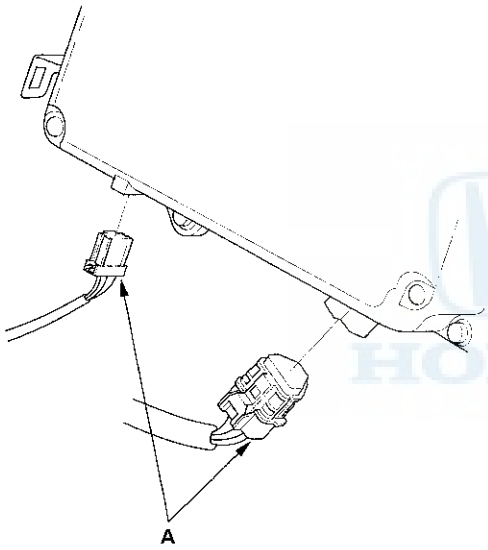

4. Remove the bolts and the A/C compressor driver (A).

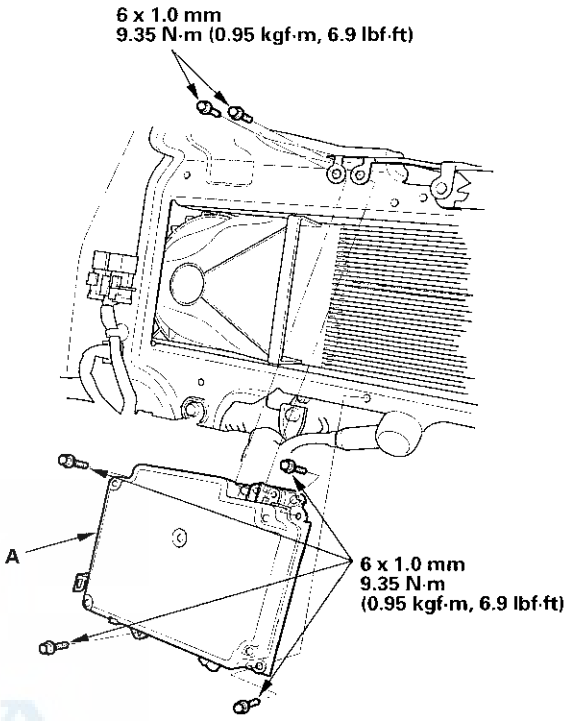

5. Install the parts in the reverse order removal.

A/C Compressor Replacement

NOTE:
- Do not install an A/C compressor into a system unless you are completely sure that the system is free of contamination. Installing the A/C compressor into a contaminated system can result in premature A/C compressor failure.
- Put on gloves to protect your hands from electrical shock.
- IMA components are located in this area. The IMA is a high-voltage system. You must be familiar with the IMA system before working on or around it. Make sure you have read the IMA service precautions before doing repairs or service (see page 12-3).

1. If the A/C compressor is marginally operable, run the engine at idle speed, and let the air conditioning work for few minutes, then shut the engine off.
2. Recover the refrigerant with a recovery/recycling/charging station (see page 21-120).
3. Remove the bulkhead (see step 13 on page 10-13).
4. Remove the drive belt (see page 10-10).
5. Remove the air cleaner housing assembly (see page 11-370).
6. Remove the battery (see page 22-63) and battery box.
7. Remove the bolt and the shield connector cover (A). Slide the retainer (B), then disconnect the connector (C). Remove the wire harness clips (D).

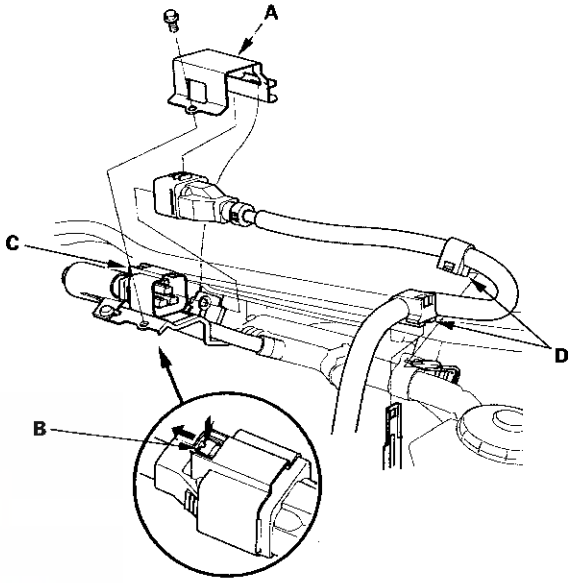

8. Remove the dipstick (A). Disconnect the connectors (B), then remove the wire harness clips (C).

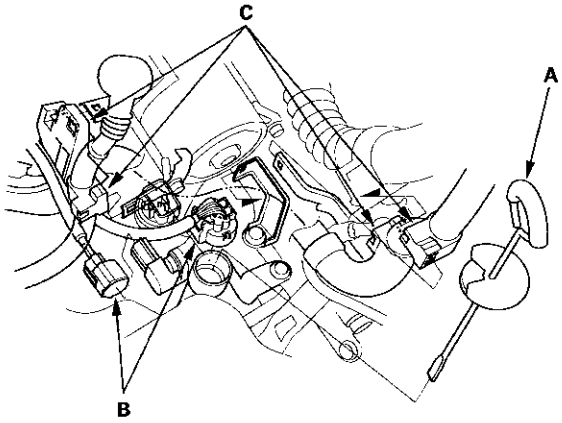

9. Remove the bolt and the holder (A).

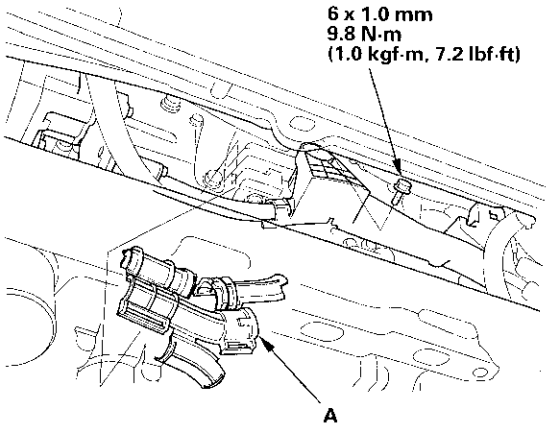

10. Remove the bolt and the auxiliary under-hood fuse/relay box bracket (A). Disconnect the connectors (B), then remove the wire harness clips (C). Remove the upper mounting bolts, the A/C condenser fan shroud (D), and the radiator fan shroud (E). Be careful not to damage the radiator fins when removing the A/C condenser fan shroud and radiator fan shroud.

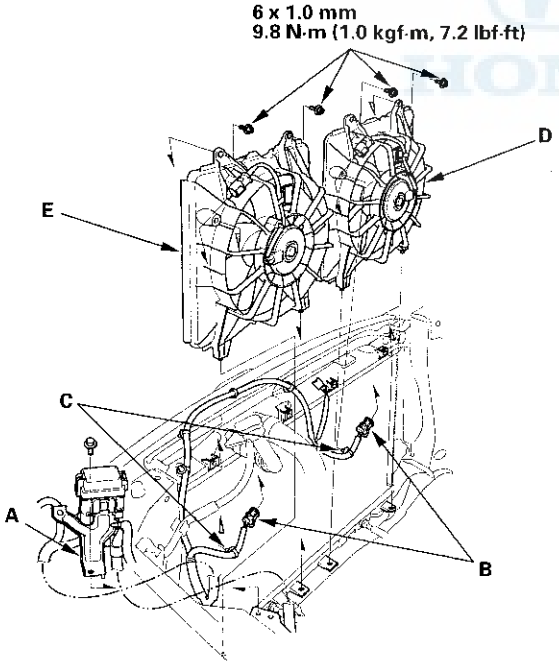

11. Disconnect the A/C compressor clutch connector (A). Remove the bolt and the nut, then disconnect the suction hose (B) and the discharge hose (C) from the A/C compressor. Plug or cap the lines immediately after disconnecting them to avoid moisture and dust contamination.

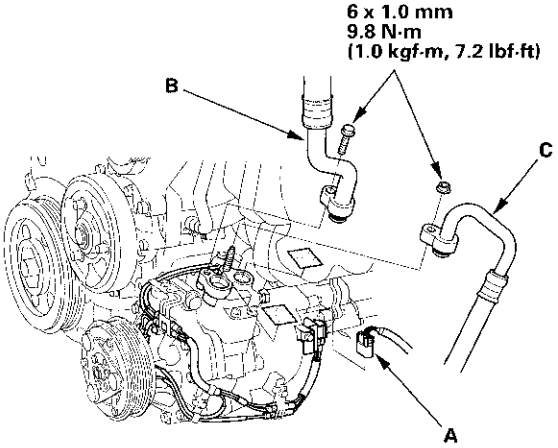

12. Remove the mounting bolts and the A/C compressor (A). Be careful not to damage the radiator fins when removing the A/C compressor.

NOTE: Install the bolts loosely, then tighten the mounting bolts in the (B), (C), and (D) in that order when installing.

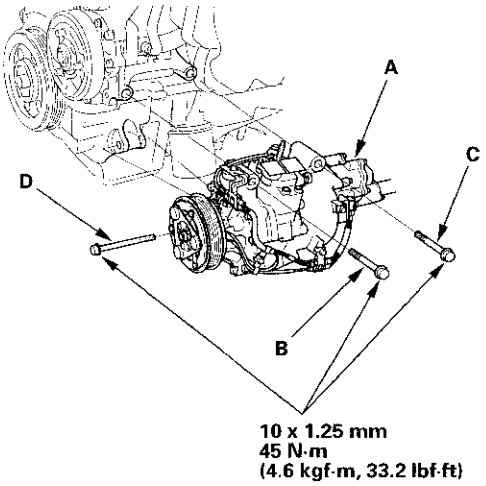

(cont'd)

A/C Compressor Replacement (cont'd)

13. Pull out on the power cable (A), then lift up the A/C compressor (B).

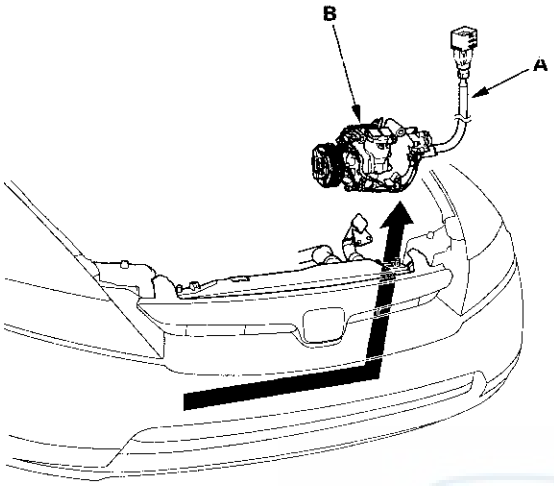

14. Install the A/C compressor in the reverse order of removal, and note these items:

- Inspect the A/C lines for any signs of contamination.
- If you're installing a new A/C compressor, you must calculate the amount of refrigerant oil to be removed from it (see page 21-7). A new A/C compressor comes with a full charge of oil.
- Use only SANDEN SE-10Y POE refrigerant oil. Using the wrong refrigerant oil can be a safety hazard (see page 21-7).
- Replace the O-rings with new ones at each fitting, and apply a thin coat of refrigerant oil before installing them. Be sure to use the correct O-rings for HFC-134a (R-134a) to avoid leakage.
- Immediately after using the oil, dispose of any remaining oil in the container. The oil rapidly absorbs moisture and has a short shelf life.
- Do not spill the refrigerant oil on the vehicle; it may damage the paint; if the refrigerant oil contacts the paint, wash it off immediately.
- Be careful not to damage the radiator fins when installing the A/C compressor, the alternator or the A/C condenser fan shroud.
- Charge the system (see page 21-122).
- If the IMA battery level gauge (BAT) displays no segments, start the engine, and hold it between 3,500 rpm and 4,000 rpm without load (in Park or neutral) until the BAT displays at least three segments.

A/C Compressor Clutch Check

1. Check the armature plate for discoloration, peeling, or other damage. If there is damage, replace the clutch set (see page 21-115).

2. Check the rotor pulley bearing play and drag by rotating the rotor pulley by hand. Also check for grease leakage from the bearing. Replace the clutch set with a new one if it is noisy, has excessive play/drag, or has bearing grease contamination on the clutch faces (see page 21-115).

   NOTE: The rotor pulley and the armature plate were mated at the factory by a bumishing operation. Always replace the pulley and the plate as a set. Replacing only one part of the clutch set will cause clutch slippage.

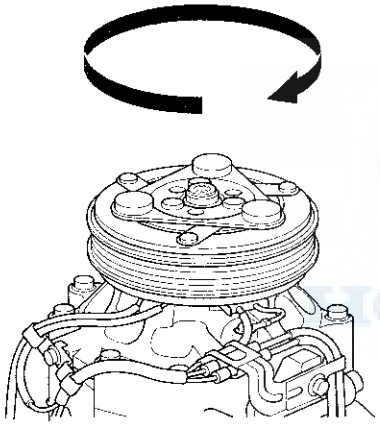

3. Measure the clearance between the rotor pulley (A) and the armature plate (B) all the way around. If the clearance is not within specified limits, remove the armature plate (see page 21-115) and add or remove shims as needed to increase or decrease clearance.

   Clearance: 0.35—0.65 mm (0.014±0.026 in.)

   NOTE: The shims are available in four thicknesses: 0.1 mm, 0.2 mm, 0.4 mm, and 0.5 mm.

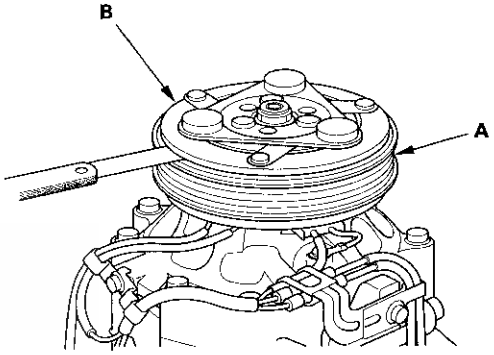

(cont'd)

A/C Compressor Clutch Check (cont'd)

4. Measure the resistance between the A/C compressor clutch connector terminal No. 2 and the compressor housing. If resistance is not within specifications, replace the field coil (see page 21-115).

   Field Coil Resistance: 3.05—3.35 Ω at 68 °F (20 °C)

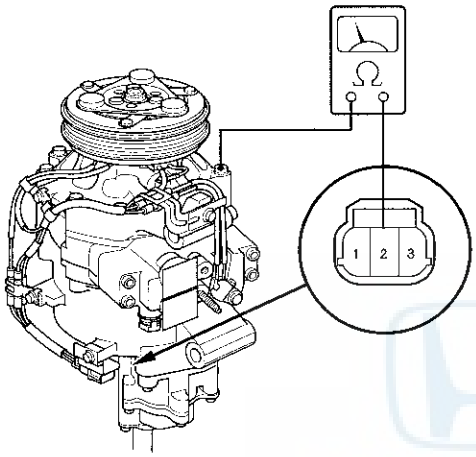

5. Remove the bolt and the holders (A), then disconnect 1P connectors (B). Check the thermal protector for continuity. If there is no continuity, replace the thermal protector (see page 21-117).

   NOTE: The thermal protector will have no continuity above about 252 to 262 °F (122 to 128 °C). When the temperature drops below about 241 to 219 °F (116 to 104 °C), the thermal protector will have continuity.

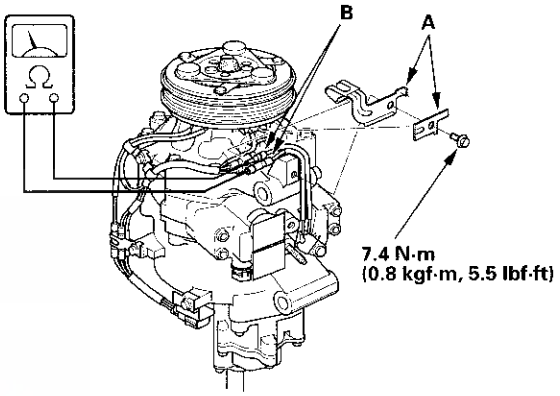

HONDA

6. Check the thermal fuse for continuity between the A/C compressor clutch connector terminal No. 1 and the 1P connector (A). If there is no continuity, replace the field coil (see page 21-115).

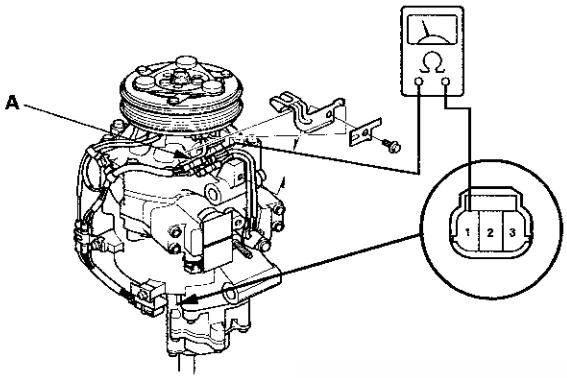

7. Remove the armature palate (see page 21-115), and inspect the armature palate and pulley friction surfaces for wear. If there is excessive wear, roughness, or scoring, replace the clutch set.

8. Inspect the friction surfaces and the compressor shaft hub for excess oil. If excess oil is present, and it is not from the engine or power steering system, then the compressor shaft seal is leaking. Replace the compressor (see page 21-110).

A/C Compressor Clutch Overhaul

Special Tools Required
A/C clutch holder; Robinair 10290, Kent-Moore J37872, Honda Tool and Equipment ACT 499A, or a commercially available equivalent

1. Remove the center nut while holding the armature plate (A) with a commercially available A/C clutch holder (B).

   NOTE:
   - Do not use a hammer to remove the snap rings. Using a hammer damages the compressor.
   - Do not hammer or pry on the pulley to remove it. If the pulley is difficult to remove, use a commercially available pulley removing tool. Make sure the jaws of the pulling tool engage the back face of the pulley, not the pulley grooves.

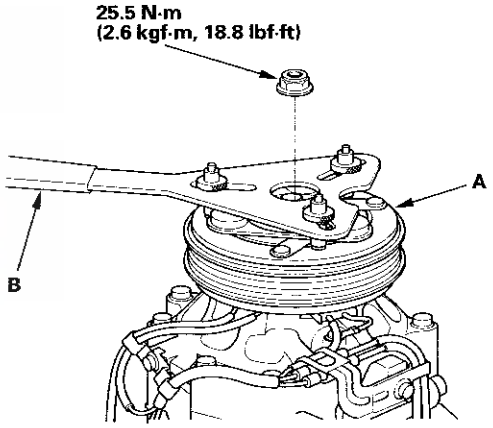

(cont'd)

A/C Compressor Clutch Overhaul (cont'd)

2. Remove the armature plate (A) and the shim(s) (B), taking care not to lose the shim(s). If the clutch needs adjustment, increase or decrease the number and thickness of shims as necessary, then reinstall the armature plate, and recheck its clearance (see page 21-113).

   NOTE: The shims are available in four thicknesses: 0.1 mm, 0.2 mm, 0.4 mm, and 0.5 mm.

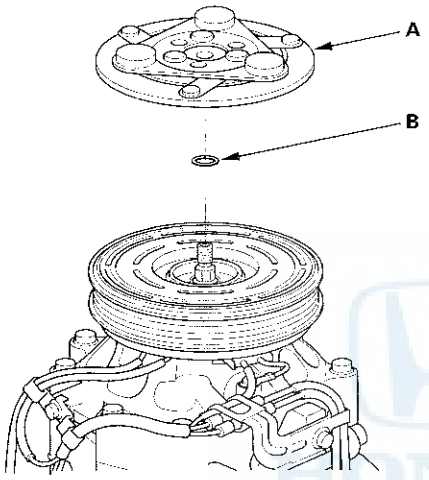

3. If you are replacing the field coil, remove the snap ring (A) with snap ring pliers, then remove the rotor pulley (B). Be careful not to damage the rotor pulley or the A/C compressor.

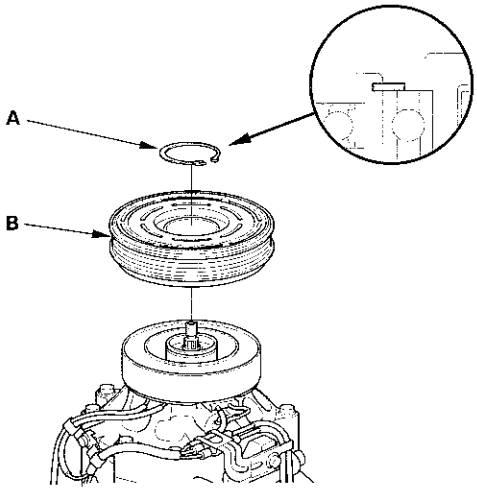

4. Remove the bolts and the holders (A), then disconnect the field coil connector. Remove the snap ring (B) with snap ring pliers, then remove the field coil (C). Be careful not to damage the field coil or the A/C compressor.

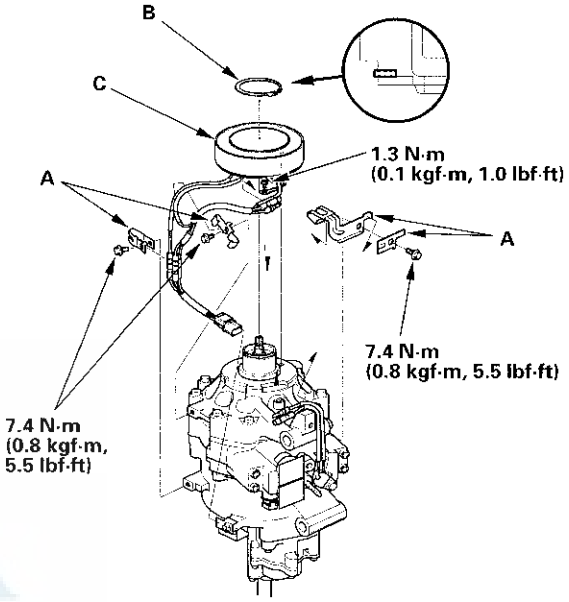

5. Reassemble the clutch in the reverse order of disassembly, and note these items:

   - When replacing the field coil, check that the new coil has the correct resistance (see step 4 on page 21-114).
   - Install the field coil with the wire side facing down, and align the boss on the field coil with the hole in the A/C compressor.
   - Clean the rotor pulley and the A/C compressor sliding surfaces with contact cleaner or other non-petroleum solvent.
   - Install new snap rings, note the installation direction, and make sure they are fully seated in the grooves.
   - Make sure that the rotor pulley turns smoothly after it's reassembled.
   - Route and clamp the wires properly to prevent damage by the rotor pulley.

6. After reinstallation, cycle the A/C clutch approximately 20 times by running the engine at 1,500—2,000 rpm and setting the A/C system to MAX A/C mode. This procedure seats the clutch friction surfaces, and increases clutch torque capacity.

A/C Compressor Thermal Protector Replacement

1. Remove the bolts and the holders (A). Disconnect 1P connectors (B), then remove the thermal protector (C).

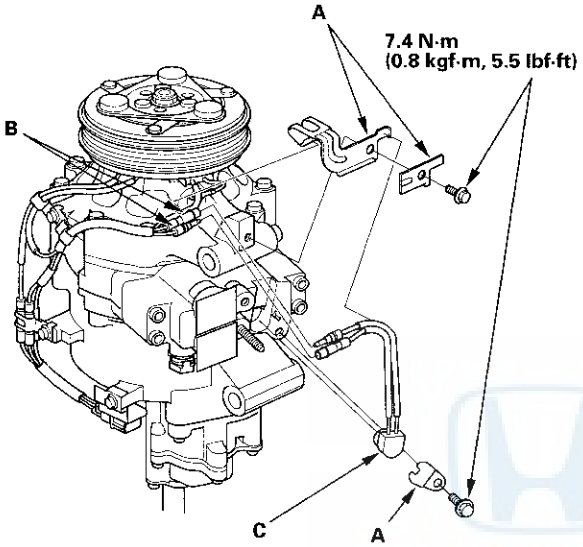

2. Replace the thermal protector (A) with a new one, and apply silicone grease (P/N 08798-9028) (B) to the bottom of the thermal protector.

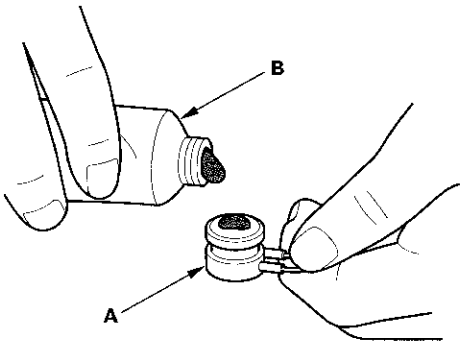

3. Install the thermal protector in the reverse order of removal.

A/C Compressor Relief Valve Replacement

NOTE: If the A/C compressor relief valve released refrigerant to the atmosphere, determine and correct the cause of the excessive system pressure, then replace the relief valve.

1. Recover the refrigerant with a recovery/recycling/charging station (see page 21-120).

2. Remove the relief valve cover (A), the relief valve (B), and the O-ring (C). Plug the opening to keep foreign matter from entering the system, and the A/C compressor oil from running out.

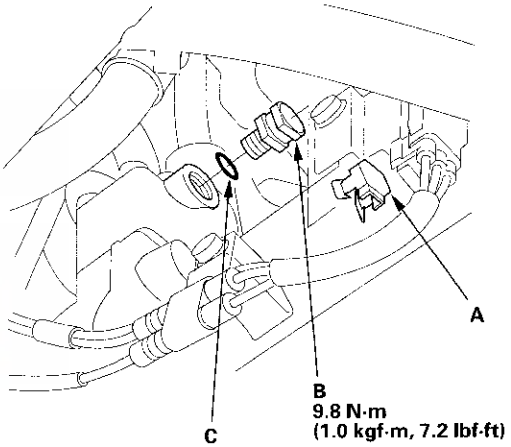

3. Clean the mating surfaces.

4. Replace the O-ring with a new one, and apply a thin coat of refrigerant oil before installing it.

5. Remove the plug, installed in step 2, then install and tighten the relief valve.

6. Charge the system (see page 21-122).

Climate Control

A/C Condenser Replacement

1. Recover the refrigerant with a recovery/recycling/charging station (see page 21-120).

2. Remove the front bumper (see page 20-122).

3. Remove the bolts, then disconnect the discharge hose (A) from the A/C condenser.

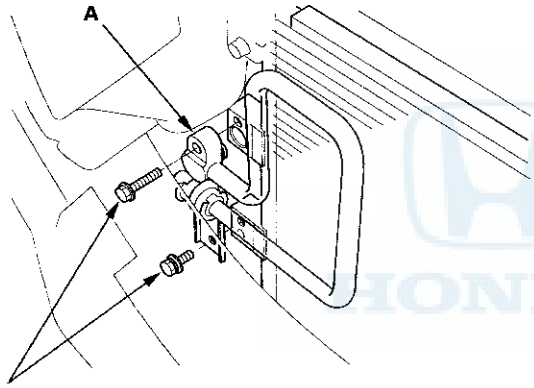

4. Remove the bolt, then disconnect the receiver line (A) from the A/C condenser.

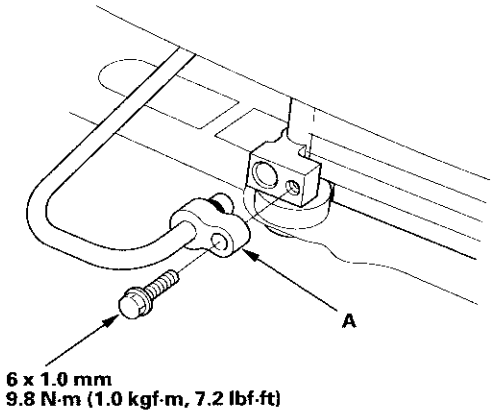

5. Remove the bolts and the A/C condenser upper mount brackets (A).

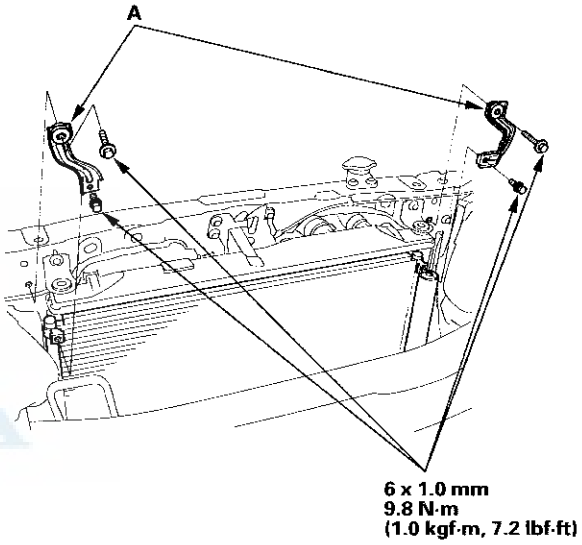

6. Lift the tab (A) to release the lock, then remove the outside air temperature sensor (B) from the receiver/dryer desiccant bracket. Disconnect the 2P connector (C), then remove the clip (D).

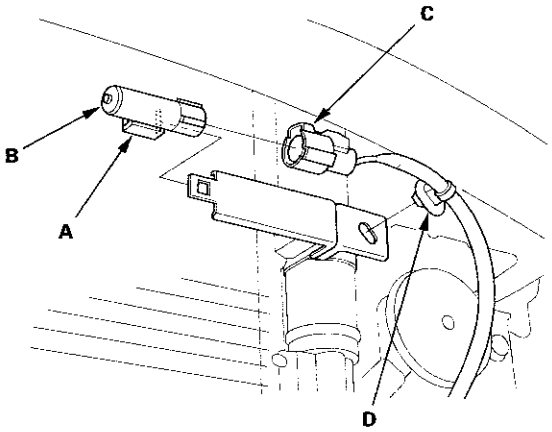

7. Remove the A/C condenser (A). Be careful not to damage the radiator and A/C condenser fins when removing the A/C condenser.

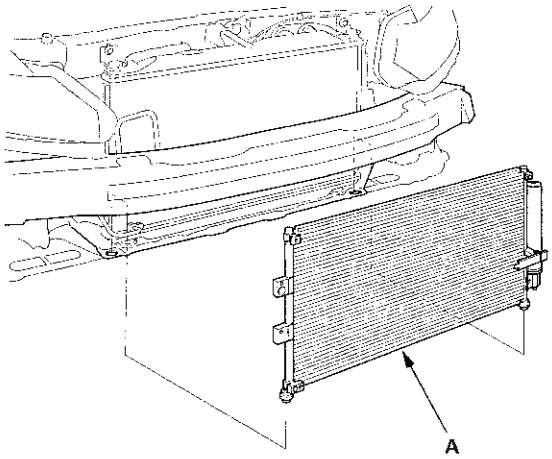

8. Install the A/C condenser in the reverse order of removal, and note these items:

   - If you're installing a new A/C condenser, add (POE) refrigerant oil (SANDEN SE-10Y). Using the wrong refrigerant oil can be safety hazard (see page 21-7).
   - Replace the O-rings with new ones at each fitting, and apply a thin coat of refrigerant oil before installing them. Be sure to use the correct O-rings for HFC-134a (R-134a) to avoid leakage.
   - Immediately after using the oil, dispose of any remaining oil in the container, due to moisture absorption and short shelf life.
   - Do not spill the refrigerant oil on the vehicle; it may damage the paint; if the refrigerant oil contacts the paint, wash it off immediately.
   - Be careful not to damage the radiator or the A/C condenser fins when installing the A/C condenser.
   - Charge the system (see page 21-122).

Receiver/Dryer Desiccant Replacement

NOTE: Install the receiver/dryer as quickly as possible to prevent the system from absorbing moisture from the air.

1. Remove the A/C condenser (see page 21-118).

2. Remove the bolts from the A/C condenser, then remove the receiver/dryer (A), the bracket (B), and the O-rings (C).

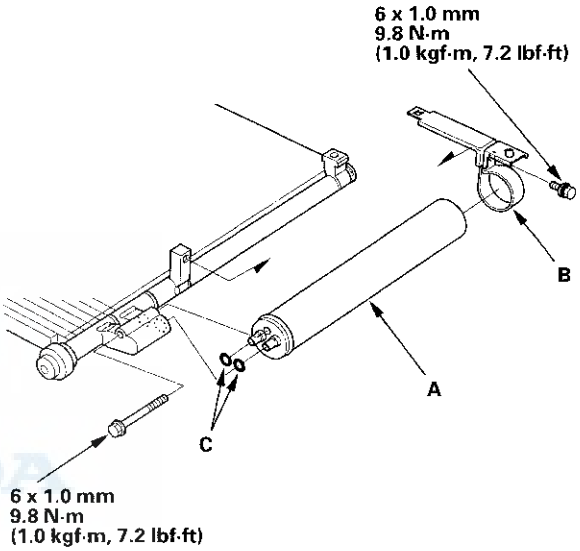

3. Install the receiver/dryer in the reverse order of removal, and note these items:

   - When replacing the receiver/dryer, add the appropriate amount of refrigerant oil (SANDEN SE-10Y) (see page 21-7). Using the wrong refrigerant oil can be a safety hazard.
   - Replace the O-rings with new ones, and apply a thin coat of refrigerant oil before installing them. Be sure to use the correct O-rings for HFC-134a (R-134a) to avoid leakage.

Refrigerant Recovery

⚠CAUTION

- Air conditioning refrigerant or lubricant vapor can irritate your eyes, nose, or throat.
- Be careful when connecting service equipment.
- Do not breathe refrigerant or vapor.

NOTE:
- If accidental system discharge occurs, ventilate the work area before resuming service.
- Additional health and safety information may be obtained from the refrigerant and lubricant manufacturers.

1. Connect an R-134a refrigerant recovery/recycling/charging station (A) to the high-pressure service port (B) and the low-pressure service port (C), as shown, following the equipment manufacturer's instructions.

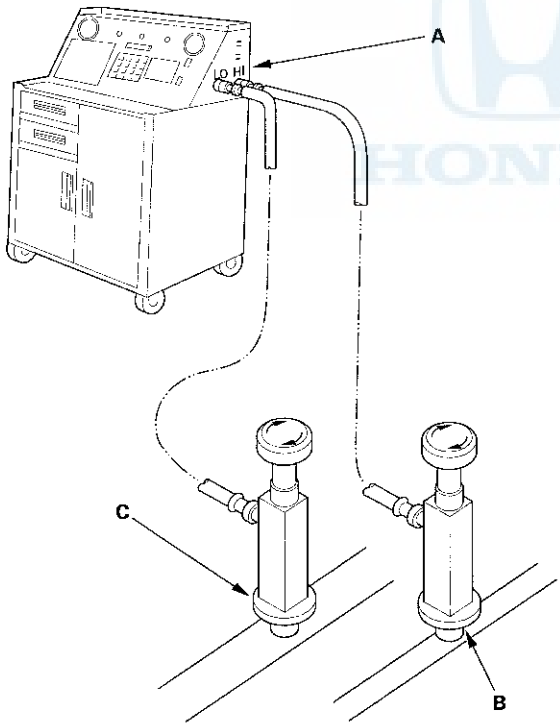

2. Measure the amount of refrigerant oil removed from the A/C system after the recovery process is completed. Be sure to put the same amount of new refrigerant oil back into the A/C system before charging.

   NOTE: Use only SANDEN SE-10Y POE refrigerant oil. Using the wrong refrigerant oli can be a safrety hazard (see page 21-7).

System Evacuation

⚠CAUTION

- Air conditioning refrigerant or lubricant vapor can irritate your eyes, nose, or throat.
- Be careful when connecting service equipment.
- Do not breathe refrigerant or vapor.

NOTE:
- If accidental system discharge occurs, ventilate the work area before resuming service.
- Additional health and safety information may be obtained from the refrigerant and lubricant manufacturers.
- Do not allow moisture to contaminate the A/C system oil. Moisture in the oil is difficult to remove, and it can damage the A/C compressor.

1. When an A/C System has been opened to the atmosphere, such as during installation or repair, it must be evacuated using an R-134a refrigerant recovery/recycling/charging station. If the system has been open for several days, the receiver/dryer should be replaced. Recover the refrigerant, if any, from the A/C system (see page 21-120), and the system should be evacuated for several hours.

2. Connect an R-134a refrigerant recovery/recycling/charging station (A) to the high-pressure service port (B) and the low-pressure service port (C), as shown, following the equipment manufacturer's instructions. Recover the refrigerant, if any, from the A/C system (see page 21-120).

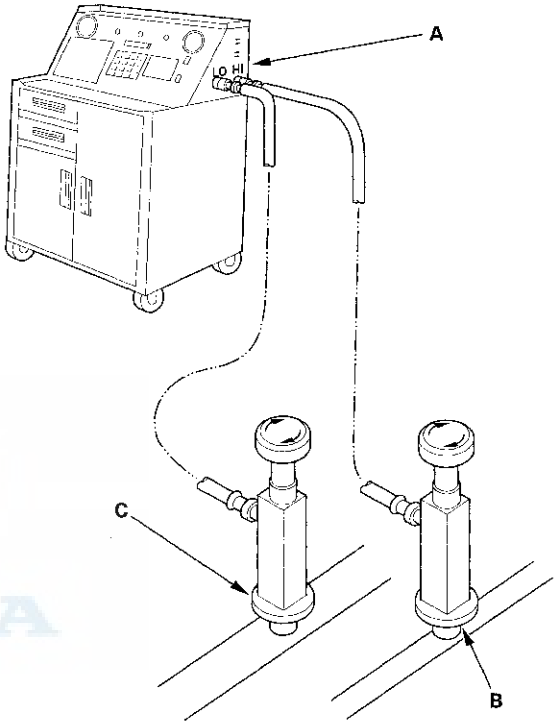

3. Evacuate the system. The vacuum pump should run for a minimum of 45 minutes to eliminate all moisture from the system. When the suction gauge reads −93.3 kPa (700 mmHg, 27.6 in.Hg) for at least 45 minutes, close all valves, and turn off the vacuum pump.

4. If the suction gauge dose not reach approximately −93.3 kPa (700 mmHg, 27.6 in.Hg) in 15 minutes, there is probably a leak in the system. Partially charge the system, and check for leaks (see page 21-123).

System Charging

⚠CAUTION

- Air conditioning refrigerant or lubricant vapor can irritate your eyes, nose, or throat.
- Be careful when connecting service equipment.
- Do not breathe refrigerant or vapor.

NOTE:
- If accidental system discharge occurs, ventilate the work area before resuming service.
- Additional health and safety information may be obtained from the refrigerant and lubricant manufacturers.

1. Connect an R-134a refrigerant recovery/recycling/charging station (A) to the high-pressure service port (B) and the low-pressure service port (C), as shown, following the equipment manufacturer's instructions.

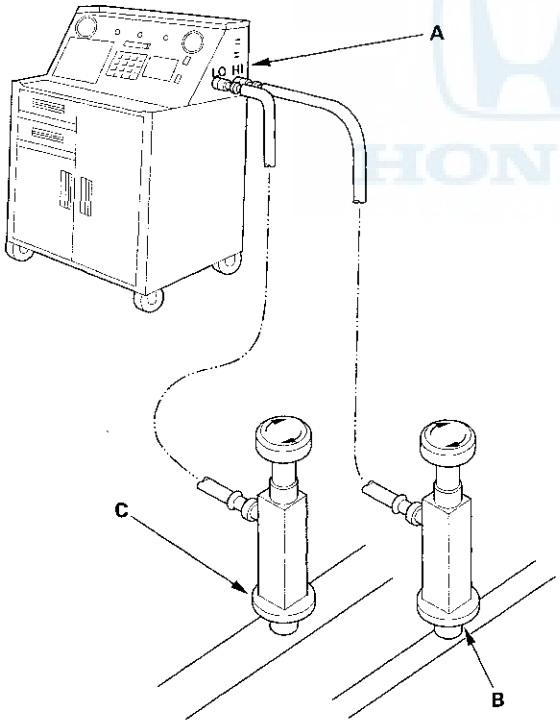

2. Recover the refrigerant in the A/C system (see page 21-120).

3. Evacuate the system (see page 21-121). If the system cannot reach a vacuum of —93.3 kPa (700 mmHg, 27.6 in.Hg) in 15 minutes, or cannot hold a vacuum for at least 15 minutes, these is probably a leak. Do the refrigerant leak check (see page 21-123), and repair any leaks before charging the system.

4. Add the same amount of new refrigerant oil to the system that was removed during recovery. Use only SANDEN SE-10Y (POE) refrigerant oil.

5. Charge the system with the specified amount of R-134a refrigerant. Do not overcharge the system; the A/C compressor will be damaged.

   Select the appropriate units of measure for your refrigerant charging station.

   Refrigerant Capacity:
   400 to 450 g
   0.40 to 0.45 kg
   0.9 to 1.0 lbs
   14.1 to 15.9 oz

6. Check for refrigerant leaks (see page 21-123).

7. Check the system performance (see page 21-129).

Refrigerant Leak Check

Special Tools Reruired
- Leak detector YGK-H-10PM
- Leak detector HLD-100
- Leak detector TIFZX-1, or commercially available

These tools are available through the Honda Tool and Equipment Program; call 888-424-6857

⚠CAUTION

- Air conditioning refrigerant or lubricant vapor can irritate your eyes, nose, or throat.
- Be careful when connecting service equipment.
- Do not breathe refrigerant or vapor.
- IMA components are located near A/C system components. Make sure you have read the IMA service precautions (see page 12-3) before doing repairs or service.

These tools are available through the Honda Tool and Equipment Program; call 888-424-6857.

NOTE:
- If accidental system discharge occurs, ventilate the work area before resuming service.
- Additional health and safety information may be obtained from the refrigerant and lubricant manufacturers.
- Check the system for leaks using an R-134a refrigerant leak detector with an accuracy of 14 g (0.5 oz) per year or better

Leak Detector Usage Tips (Refer to the Operator's Manual for complete operating instructions):

- Position the vehicle in a wind-free work area. This will aid in detecting small leaks.
- When using the leak detector for the first time, allow it to warm up for 2 minutes with the probe in a clean atmosphere. This lets the temperature sensor in the detector stabilize.
- The calibration check should be done in the "Search 2" mode. Once that is done, the other check modes do not need calibrating.
- When leak checking through the HVAC module drain hose, avoid drawing water into the probe. Water can damage the internal pump and sensor.
- Avoid creasing the flexible probe extension. Creases can restrict air flow and give false readings.
- Because the detector recalibrates itself for ambient gases, it may be necessary to move the detector away from the leak to clear the sensor. Once the sensor has cleared, recheck the suspected leak.
- When removing the clear probe tip, be careful not to lose the flow ball.
- R-134a is heavier than air, always check below and to the sides of all potential leak sources.
- Halogen leak detectors are sensitive to chemicals: windshiled washing solutions, solvents/cleaners, and some vehicle adhesives. Keep these chemicals out of the area when doing leak detection.

(cont'd)

Refrigerant Leak Check (cont'd)

1. Connect an R-134a refrigerant recovery/recycling/charging station (A) to the high-pressure service port (B) and the low-Connect an R-134a refrigerant recovery/recycling/charging station (A) to the high-pressure service port(B) and the low-pressure service port (C), as shown, following the equipment manufacturer's instructions.

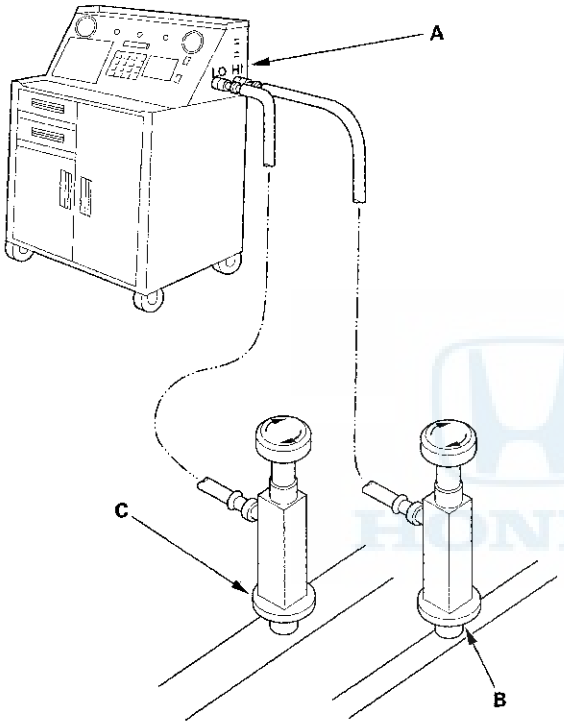

2. Recover refrigerant from the A/C system (see page 21-120), and evacuate the system (see page 21-121). If the system achieves a vacuum of approximateiy 93.3 kPa (700 mmHg, 27.6 in.Hg) in 15 minutes, and holds the vacuum for 15 minutes, then the system dose not have a leak at this time. If the system cannot achieve or hold a vacuum, continue the refrigerant leak check.

3. Open the high pressure valve to charge the system to the specified capacity.
   Select the appropriate units of measure for your refrigerant charging station.

   Refrigerant Capacity:
   400 to 450 g
   0.40 to 0.45 kg
   0.9 to 1.0 lbs
   14.1 to 15.9 oz

4. With the engine OFF, use a halogen leak detector first to detect the leak source. Follow a continuous path in order to ensure that you will not miss any possible leaks. Test the following areas of system for leaks.

Possible Leak Area	Diagnostic Procedure with the Leak Detector	Notes
Service Ports	Check the service ports with the detector.	When capping the service ports, ensure that the seals on the port caps are in place, and that the caps are tight. The caps are used as the final seals in the system.
Condenser	Check all fittings, couplings, brazed/welded areas and areas around attachment points.	• Check for joints or connections coated with oily dust. • Check for damaged and corroded areas. • Move the probe slowly (1 inch/second or less), and keep it within 1/4 inch of the component being checked. This maximizes the chance of detecting a leak. • If you detected a leak, blow compressed air over the area, then recheck for leaks. For large leaks, clearing the area with compressed air may help you pinpoint the leak source.
A/C Lines (Low pressure side)	Wiggle the hose when checking crimped metal ends on rubber hoses.	• Check all fittings, couplings, pressure switches, brazed/welded areas, and areas around attachment points on A/C lines and components. • Check for damaged and corroded areas. • Move the probe slowly (1 inch/second or less), and keep it within 1/4 inch of the component being checked. This maximizes the chance of detecting a leak.

HONDA

This page intentionally left blank.

A/C System Noise Check

⚠CAUTION

- Air conditioning refrigerant or lubricant vapor can irritate your eyes, nose, or throat.
- Be careful when connecting service equipment.
- Do not breathe refrigerant vapor.
- IMA components are located near A/C system components. Make sure you have read the IMA service precautions (see page 12-3) before doing repairs or service.

The A/C system noise check will help you determine the source of abnormal A/C system noise.

NOTE:
- If accidental system discharge occurs, ventilate the work area before resuming service.
- Additional health and safety information may be obtained from the refrigerant and lubricant manufacturers.
- Identify the conditions when the noise occurs. The weather, the vehicle speed, the vehicle being in gear or in neutral, the engine temperature, or other conditions may be factors in determining the noise source.
- Do an A/C system inspection (see page 21-6), and correct any problems found prior to diagnosing abnormal noises.
- Abnormal A/C noises can be misleading. For example, a sound similar to a failed bearing may be caused by loose fasteners, loose mounting brackets, or faulty compressor clutch assembly.

1. Inspect the air inlet grille in the cowl cover for debris. If debris is present, remove it.

2. Sit inside the vehicle, close the doors and windows, and turn the ignition switch to ON (II), but do not start the engine. Cycle the HVAC system through all blower speeds and all air distribution modes to determine where and when the noise occurs.

3. Operate the blower at each speed with the engine and A/C off, and check for unusual noises and excessive vibration. If noise and/or vibration are present, do the following checks:

   -1 If the noise or vibration occurs only in a specific mode or setting, then check these items:
   - Operation of the mode control motor, door, and linkage
   - Operation of the air mix control motor(s), door(s), and linkage
   - Operation of the recirculation motor, door, and linkage

   -2 If there is a squeaking or chirping noise, but no unusual vibration, replace the blower motor (see page 21-101).

   -3 Remove the blower unit (see page 21-99), and check for foreign material (leaves or twigs, for example) on the blower motor and fan. If foreign material is present, remove it, and recheck for noise. If you don't find any foreign material, remove the blower motor (see page 21-101), and check these items:
   - Check if the fan blades are cracked or broken
   - Make sure the fan retainer is tight
   - Inspect the fan alignment on the blower motor shaft

   Replace the blower motor if any problems are present.

4. Set up the vehicle for the running A/C checks:

   - Select a quiet area for testing
   - Apply the parking brake
   - Shift the vehicle in PARK or in Neutral
   - Start the engine
   - Set the temperature control dial to Max Cool
   - Set the mode control switch to Vent
   - Set the fan control dial to minimum (but not OFF)
   - Turn the A/C switch ON

   Switch the compressor on and off several times to clearly identify the sound during A/C compressor operation. Listen to the noise while the A/C compressor clutch is engaged and disengaged. Probe the A/C system with a stethoscope to pinpoint the noise.

   NOTE: If the noise does not change when the A/C compressor clutch engages or disengages, the noise may be caused by an engine-related component. Probe the engine area with a stethoscope to pinpoint the noise.

(cont'd)

A/C System Noise Check (cont'd)

5. Turn the ignition switch to LOCK (0), and check the drive belt for excessive wear, oil contamination, improper routing (see page 10-9), or a faulty belt tenssioner (see page 10-10). Correct any problems found. Start the engine, run the A/C system, and check if the noise is coming from the drive belt, the belt tensioner or any of the pulleys. Repair or replace any faulty components.

6. Listen for noises coming from the A/C lines, the A/C hoses, the condenser, the evaporator, the receiver-drier, or the expansion valve, and check these items:

   - Noises caused by A/C components touching other components or the body. Reroute or insulate the A/C component(s) as needed, and recheck for noise.
   - Loose, damaged or excessively worn A/C components or mounting hardware. Repair or replace the faulty component(s) of hardware, and recheck for noise.
   - A moaning noise coming from the A/C suction line. If there is a moaning noise, check the system refrigerant charge (see page 21-122). If the refrigerant charge is OK, replace the receiver/dryer.

7. Check the operation of the A/C compressor clutch:

   - Make sure compressor clutch engages without slipping. If the clutch does not engage, troubleshoot the A/C compressor clutch circuit (see page 21-84). If the compressor clutch slips, replace the complete clutch assembly (see page 21-115).
   - Make sure the compressor clutch disengages. If the clutch does not disengage, do the A/C compressor clutch check (see page 21-113). If the compressor clutch is OK, replace the A/C compressor (see page 21-110).
   - Make sure the compressor clutch cycles normally. If the compressor clutch is cycling rapidly, the A/C system is probably low on refrigerant due to a leak. Do the refrigerant leak check (see page 21-123). If the refrigerant charge is OK, and there are no leaks, troubleshoot the A/C compressor clutch circuit (see page 21-84).

8. Listen with a stethoscope for noises coming from the A/C compressor, and check these items:

   - The noise changes when the compressor clutch disengages. If the noise does not change when the A/C compressor disengages, the noise may be caused by an engine-related component. Probe the engine area with a stethoscope to pinpoint the noise.
   - The A/C system operating pressures are normal. If the system pressures are abnormal, troubleshoot the problem using the pressure test table in the A/C system check (see page 21-129). Correct the pressure-related problem(s), and recheck for noise.
   - The compressor hose connections, mounting brackets, and fasteners are in good condition. If any of these components are loose, damaged, or excessively worn, repair or replace the faulty component(s), and recheck for noise. If these components are in good condition, and the noise is still present, replace the A/C compressor (see page 21-110).
   - Teat-drive the vehicle to enable the auto idle stop mode (see page 12-22). Have an assistant sit in the driver's seat and press the brake pedal with the shift lever in D (engages auto idle stop mode). Listen for abnormal noises coming from the electric motor-driven section of the A/C compressor. If unusual noises are present, replace the A/C compressor (see page 21-110).

A/C System Test

Performance Test

⚠CAUTION

- Air conditioning refrigerant or lubricant vapor can irritate your eyes, nose, or throat.
- Be careful when connecting service equipment.
- Do not breathe refrigerant or vapor.

The performance test will help determine if the A/C system is operating within specifications.

NOTE:
- If accidental system discharge occurs, ventilate the work area before resuming service.
- Additional health and safety information may be obtained from the refrigerant and lubricant manufacturers.

1. Connect an R-134a refrigerant recovery/recycling/charging station to the high-pressure service port and the low-pressure service port, following the equipment manufacturer's instructions.

2. Determine the relative humidity and air temperature.

3. Open the glove box. Remove the glove box stop on each side, then let the glove box hang down (see page 20-91).

4. Insert a thermometer (A) in the center vent.

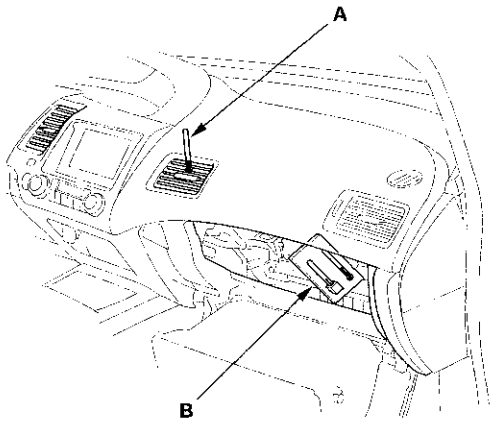

5. Place a thermometer (B) near the blower unit's recirculation inlet duct.

6. Test conditions:

   - Avoid direct sunlight.
   - Open hood.
   - Open front doors.
   - Set the temperature control dial to Max Cool, the mode control switch to Vent, and the recirculation control switch to Recirculate.
   - Turn the A/C switch ON and the fan switch to Max.
   - Hold the engine speed at 1,500 rpm.
   - No driver or passengers in vehicle.

7. After running the air conditioning for 10 minutes under the above test conditions, read the delivery temperature from the thermometer in the center vent, the intake temperature near the blower unit, and the discharge (high) and suction (low) pressures on the A/C gauges.

(cont'd)

A/C System Test (cont'd)

8. To complete the vent (delivery)/ambient air (intake) temperature chart:

   - Mark the vent (delivery) temperature on the vertical line.
   - Mark the ambient air (intake) temperature on the bottom line.
   - Draw a vertical line from the ambient air (intake) temperature mark.
   - Draw a horizontal line from the vent (delivery) temperature mark until it intersects the vertical line.

   NOTE: The vent and intake temperatures should intersect in the shaded area. Any measurements outside the line may indicate the need for further inspection.

Ambient (Intake) Temperature vs. Vent (Delivery) Temperature

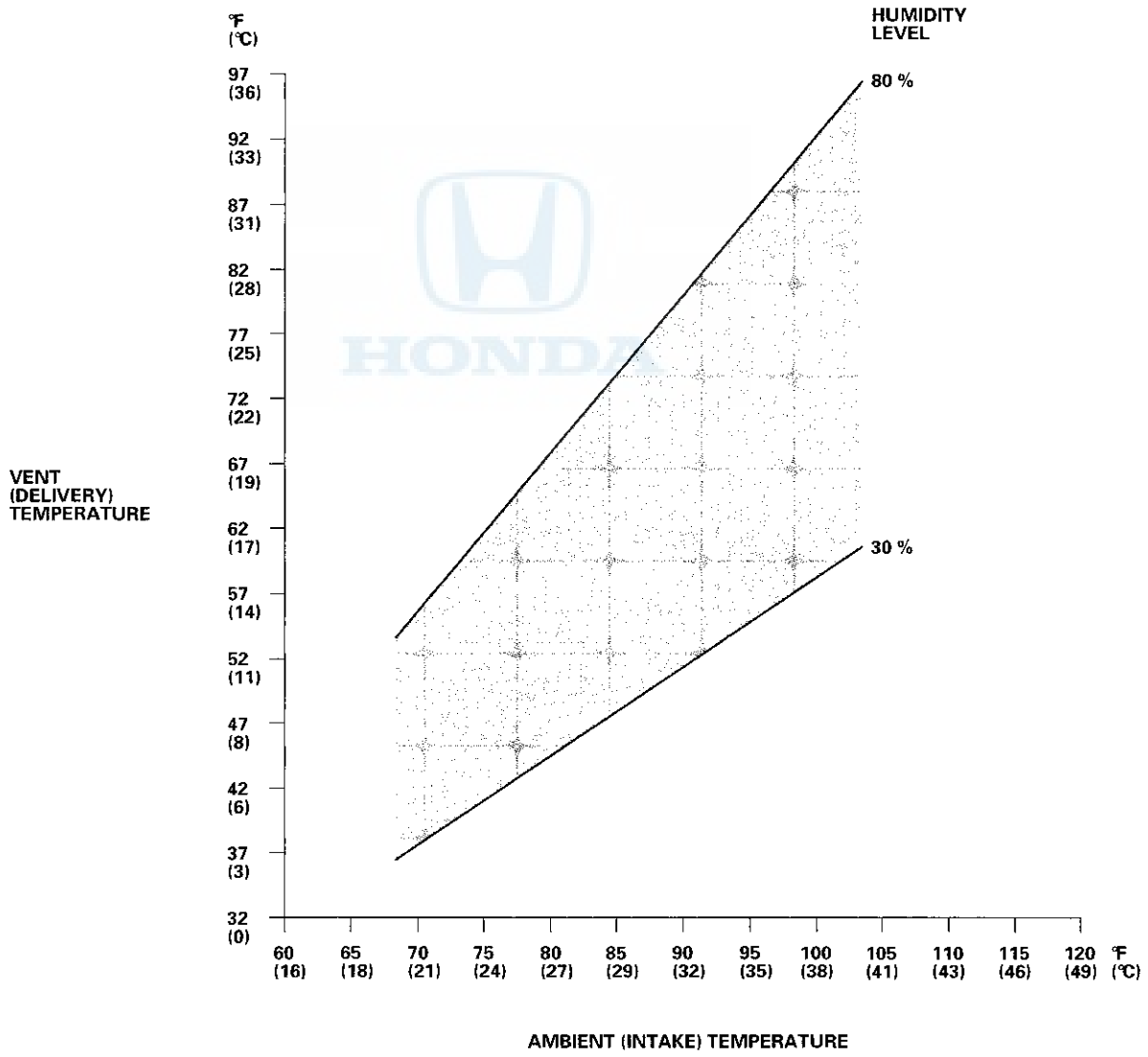

9. To complete the high side (discharge) pressure/ambient air (intake) temperature chart:

- Mark the high side (discharge) pressure temperature on the vertical line.
- Mark the ambient air (intake) temperature on the bottom line.
- Draw a vertical line from the ambient air (intake) temperature mark.
- Draw a horizontal line from the high side (discharge) pressure mark until it intersects the vertical line.

NOTE: The high side pressure and intake temperature should intersect in the shaded area. Any measurements outside the line may indicate the need for further inspection.

Ambient (Intake) Temperature vs. High Side (Discharge) Pressure

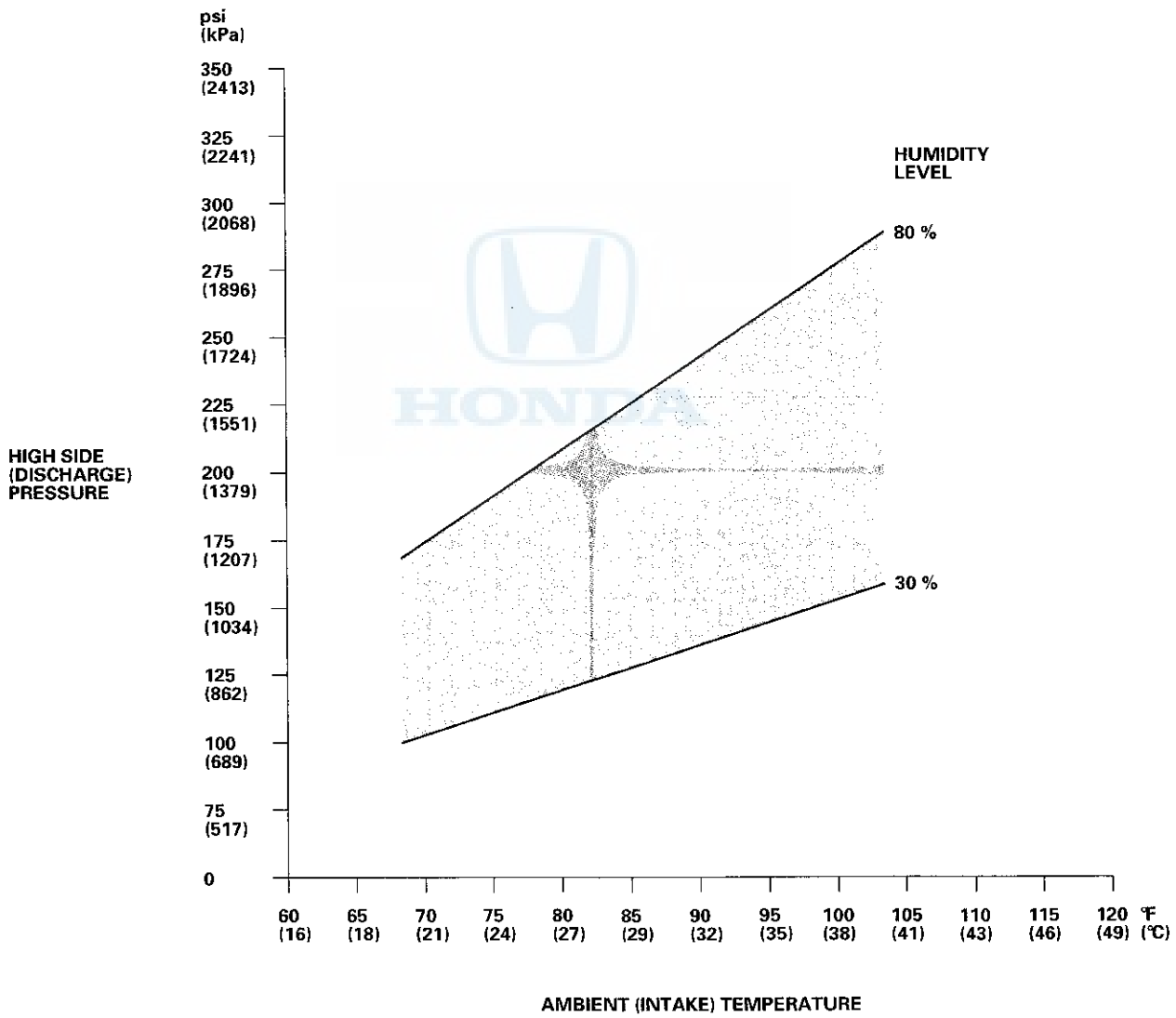

(cont'd)

A/C System Test (cont'd)

10. To complete the low side (suction) pressure/ambient air (intake) temperature chart:

    - Mark the low side (suction) pressure along the vertical line.
    - Mark the ambient air (intake) temperature along the bottom line.
    - Draw a vertical line from the ambient air (intake) temperature mark.
    - Draw a horizontal line from the low side (suction) pressure mark until it intersects the vertical line.

    NOTE: The low side pressure and intake temperature should intersect in the shaded area. Any measurements outside the line may indicate the need for further inspection.

Ambient (Intake) Temperature vs. Low Side (Suction) Pressure

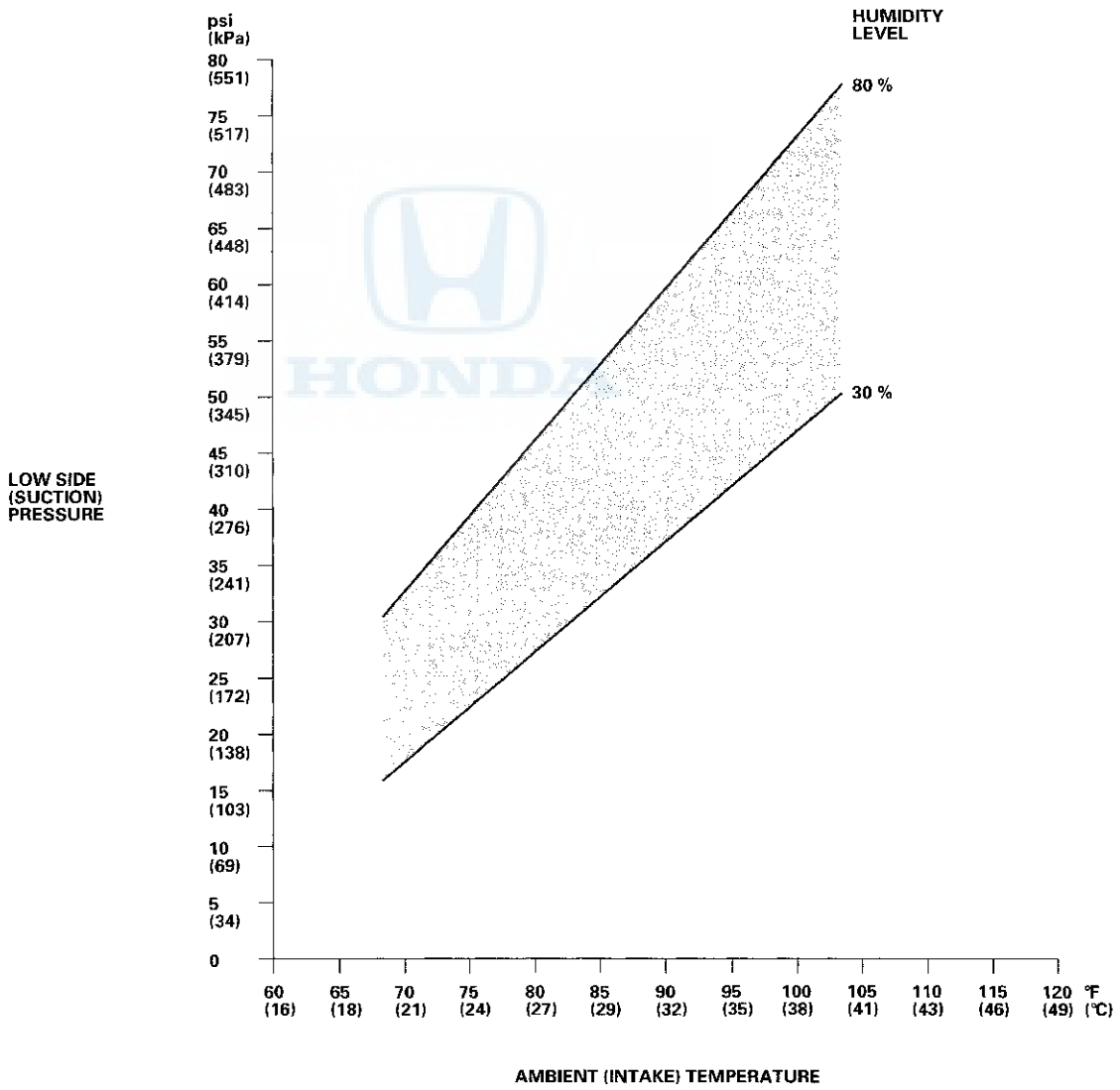

Pressure Test

Test results	Related symptoms	Probable cause	Remedy
Suction and discharge pressures are normal	Warm air from the vents.	The A/C system contains too much refrigerant oil. The air mix door is not operating properly.	• Recover refrigerant (see page 21-120) and evacuate the system (see page 21-121). Adjust the amount of oil in the system, then recharge the system (see page 21-122). • Check air mix door operation (see page 21-95), and repair as needed.
Suction and discharge pressures are roughly equal and steady	The Suction and discharge pressures equalize when the engine is revved	The A/C compressor clutch or the drive belt is slipping, or the compressor shaft seal is leaking.	• Check whether the A/C compressor clutch or the drive belt is slipping. • If the drive belt is slipping, replace the drive belt (see page 10-10). Also inspect the drive belt auto-tensioner (see page 10-10). • If the A/C compressor clutch is slipping, replace it (see page 21-115). • Check the A/C compressor shaft seal. If it's leaking, replace the A/C compressor (see page 21-110).
Suction and discharge pressures are roughly equal but fluctuate	Suction and discharge pressures fluctuate while running. Pressures equalize as soon as the A/C compressor disengages.	The compressor discharge valve or the compressor gasket is faulty.	Replace the A/C compressor (see page 21-110).
Suction and discharge pressures are roughly equal and abnormally low	The suction and discharge pressures do not change during continued operation.	The A/C system is undercharged.	Recover refrigerant (see page 21-120), then do the refrigerant leak check (see page 21-123). Repair any leaks, then recharge the system (see page 21-122).
Suction and discharge pressures are abnormally high, but normalize when the condenser is cooled	The suction pressure decreases when cool water is sprayed on the A/C condenser.	The A/C system is overcharged.	Recover refrigerant (see page 21-120), evacuate the system (see page 21-121), and recharge the system to specifications (see page 21-122).
Suction and discharge pressures are abnormally high, and refrigerant line temperatures are abnormal	• The high pressure vapor line to the condenser is too hot. • The low pressure liquid line from the expansion valve is not cold. • There is an abrupt temperature drop along a refrigerant line, or in the condenser or evaporator.	The A/C system refrigerant flow is restricted.	Replace the restricted line or component.

(cont'd)

A/C System Test (cont'd)

Test results	Related symptoms	Probable cause	Remedy
Suction and discharge pressures are abnormally high, but drop rapidly when the compressor disengages	• After stopping the A/C compressor, the discharge pressure quickly drops about 196 kPa (28 psi), then falls gradually. • The input and output temperatures at the expansion valve are not similar.	There is excess air in the A/C system.	Recover refrigerant (see page 21-120), evacuate the system (see page 21-121), and recharge the system (see page 21-122).
Suction and discharge pressures are abnormally high, and there is little or no airflow through the A/C condenser		• The condenser and/or radiator fins are clogged • The condenser fins are damaged • The condenser and/or radiator fans are not working properly	• Clean debris from the condenser and/or radiator fins. • Comb the condenser fins to repair any damage. • Troubleshoot the A/C condenser fan and/or the radiator fan circuit(s).
The suction pressure is high and the discharge pressure is low. Both pressures are steady	• The liquid line temperature is similar on both sides of expansion valve. • System pressures do not vary at a steady engine speed.	The expansion valve is stuck open.	Replace the expansion valve (see page 21-103).
The suction pressure is low, the discharge pressure is high, and the refrigerant temperature changes abnormally somewhere in the system	• The high pressure liquid line going into expansion valve is cold. • There is an abrupt temperature drop in the line between the compressor and the condenser, or in the line between the condenser and the expansion valve.	The A/C system refrigerant flow is restricted.	Replace the restricted line or component.
The suction pressure is high, the discharge pressure is low, and there are particle contaminants in the refrigerant lines.	The expansion valve and/or the compressor discharge hose are contaminated with metal flakes or desiccant particles.	The A/C compressor is malfunctioning.	Replace the A/C compressor (see page 21-110). If the system is contaminated with desiccant, replace the receiver/dryer (see page 21-119).

Test results	Related symptoms	Probable cause	Remedy
The suction pressure is high, the discharge pressure is low, and the pressures quickly change when the A/C disengages	The discharge and suction pressures equalize soon after the A/C compressor stops.	The A/C compressor seal is faulty.	Replace the A/C compressor (see page 21-110).
Suction and discharge pressures are both low and none of the refrigerant lines are cold	There is no frost on the expansion valve, and the low-pressure liquid line is not cold.	The A/C system has a leak (very low refrigerant charge).	Do the refrigerant leak check (see page 21-123), repair any leaks, and recharge the A/C system (see page 21-122).
Suction and discharge pressures are both low, and the expansion valve or the suction line is abnormally cold	• The temperature around the expansion valve is too low compared to the temperature around the receiver/dryer. • The low pressure (suction) hose/line is cooler than the evaporator.	• The discharge hose/line is clogged or kinked, which is restricting refrigerant flow. • The suction hose/line is clogged or kinked, which is restricting refrigerant flow.	Repair or replace the faulty A/C line (see page 21-9).
Initially, the suction and discharge pressure are normal, but both become abnormally low during operation	During extended operation, the air flow from the vents decreases.	The evaporator is freezing up.	Run the fan with A/C compressor off to warm the evaporator, then test the evaporator temperature sensor (see page 21-90). If necessary, replace the evaporator temperature sensor.
Suction and discharge pressures are both low and there are abnormal temperature changes at the expansion valve	• During extended operation, warm air comes out of the vents, the suction pressure decreases, and heavy frost occurs on the low pressure liquid line. • The low pressure liquid line is cold at the expansion valve, but warm after the valve. • There is frost on the expansion valve.	The expansion valve is stuck closed.	• Replace the expansion valve (see page 21-103) and the receiver/dryer (see page 21-119). • Check the old expansion valve for contamination. If contaminants are found, replace the component that caused the contamination.
The discharge pressure is low, the suction pressure is extremely low, and the expansion valve outlet is abnormally warm	There is no frost on the expansion valve outlet, and the liquid line temperature changes significantly across the expansion valve.	There is excessive moisture in the A/C system.	• Recover refrigerant (see page 21-120), then replace the receiver/dryer (see page 21-119). • Evacuate the system (see page 21-121) and recharge the system (see page 21-122).

(cont'd)

A/C System Test (cont'd)

Test results	Related symptoms	Probable cause	Remedy
The discharge pressure is low, the suction pressure is extremely low, and the suction line is abnormally cold	There is frost on the line from the evaporator to the compressor.	The evaporator is internally contaminated or plugged.	Recover refrigerant (see page 21-120), then replace the evaporator (see page 21-101). Evacuate the system (see page 21-121) and recharge the system (see page 21-122).
The discharge pressure is low, the suction pressure is extremely low, and the refrigerant temperature doesn't change going through the expansion valve	• There is no frost on the expansion valve, and the low pressure liquid line is not cold. • The liquid line temperatures are similar on both sides of expansion valve.	The expansion valve is faulty.	Replace the expansion valve (see page 21-103).
The discharge pressure is low, the suction pressure is extremely low, and the expansion valve is abnormally cold	There is frost on the expansion valve.	Excessive moisture in the system is freezing the expansion valve.	Recover refrigerant (see page 21-120), the replace the receiver/dryer. Evacuate the system (see page 21-121), and recharge the system (see page 21-122).
The discharge pressure is low, the suction pressure is extremely low, and the high pressure liquid line is abnormally cold	There is frost on the line from the receiver/dryer to the expansion valve.	The receiver/dryer is clogged.	Recover refrigerant (see page 21-120), then replace the receiver/dryer. Evacuate the system (see page 21-121) and recharge the system (see page 21-122).

HONDA

SUPPLEMENTAL RESTRAINT SYSTEM (SRS) (If electrical maintenance is required)

The Civic Hybrid SRS includes a driver's airbag in the steering wheel hub, a passenger's airbag in the dashboard above the glove box, seat belt tensioners in the front seat belt retractors, seat belt buckle tensioners in the front seat belt buckles, side curtain airbags in the sides of the roof, and side airbags in the front seat-backs. Information necessary to safely service the SRS is included in this Service Manual. Items marked with an asterisk (*) on the contents page include or are located near SRS components. Servicing, disassembling, or replacing these items requires special precautions and tools, and should be done by an authorized Honda dealer.

- To avoid rendering the SRS inoperative, which could lead to personal injury or death in the event of a severe frontal or side collision, all SRS service work should be done by an authorized Honda dealer.
- Improper service procedures, including incorrect removal and installation of the SRS, could lead to personal injury caused by unintentional deployment of the airbags, side airbags, and/or side curtain airbags.
- Do not bump or impact the SRS unit, front impact sensors, side impact sensors, or rear safing sensor when the ignition switch is in ON (II), or for at least 3 minutes after the ignition switch is turned to LOCK (0); otherwise, the system may fail in a collision, or the airbags may deploy.
- SRS electrical connectors are identified by yellow color coding. Related components are located in the steering column, front console, dashboard, dashboard lower panel, in the dashboard above the glove box, in the front seats, in the roof side, and around the floor. Do not use electrical test equipment on these circuits.

INTEGRATED MOTOR ASSIST (IMA) SYSTEM (If electrical maintenance is required)

IMA components are located in this area. The IMA is a high-voltage system. The high voltage cables and their covers are identified by orange coloring. The safety labels are attached to high voltage and other related parts (see page 1-7). You must be familiar with the IMA system before working around it. Make sure you have read the Service Precautions in the IMA section before performing repairs or service (see page 12-3).

Body Electrical

Body Electrical
Special Tools 22-2
General Troubleshooting Information 22-3

Relay and Control Unit Locations 22-7

Connectors and Harnesses 22-13

Fuse/Relay Boxes 22-49

Power Distribution 22-52

Ground Distribution 22-57

Under-hood Fuse/Relay Box
Removal and Installation 22-59

*** Under-dash Fuse/Relay Box**
Removal and Installation 22-60

12 Volt Battery
12 Volt Battery Test 22-61
Battery Terminal Disconnection and Reconnection 22-62
Battery Removal and Installation 22-63

Relays
Power Relay Test 22-64

*** Ignition Switch**
Test 22-66
Replacement 22-66

Multiplex Integrated Control System
Component Location Index 22-67
General Troubleshooting Information 22-68
DTC Troubleshooting Index 22-70
System Description 22-74
Troubleshooting-B-CAN System Diagnosis Test Mode A 22-89
Troubleshooting-B-CAN System Diagnosis Test Mode B 22-90
Troubleshooting-B-CAN System Diagnosis Test Mode C 22-91
Troubleshooting-B-CAN System Diagnosis Test Mode D 22-92
Troubleshooting-B-CAN System Diagnosis Test Mode 1 and Test Mode 2 (without the HDS) 22-93
Sleep and Wake-up Mode Test 22-95
Circuit Diagram 22-96
DTC Troubleshooting 22-98
MICU Input Test 22-106

Keyless/Power Door Locks/Security System
Component Location Index 22-109
System Description 22-111
Circuit Diagram 22-114
DTC Troubleshooting 22-118
Symptom Troubleshooting 22-125
Tripped Sensor History 22-129
MICU Input Test 22-130
Door Lock Actuator Test 22-134
Door Lock Knob Switch Test 22-135
Door Lock Switch Test 22-136
Door Key Cylinder Switch Test 22-137
Trunk Lid Release Actuator Test 22-137
Trunk Key Cylinder Switch Test 22-138
Hood Switch Test 22-138
Transmitter Test/Replacement 22-139

Horns
Component Location Index 22-142
Circuit Diagram 22-143
Horn Test/Replacement 22-144
Horn Switch Test 22-144

Exterior Lights
Component Location Index 22-146
Circuit Diagram 22-148
DTC Troubleshooting 22-152
MICU Input Test 22-158
Combination Light Switch Test/Replacement 22-162
Headlight Adjustment 22-163
Headlight Replacement 22-164
Bulb Replacement 22-165
Taillight Replacement 22-166
Inner Taillight Replacement 22-166
License Plate Light Replacement 22-167
High Mount Brake Light Replacement 22-167
Brake Pedal Position Switch Test 22-168

Turn Signal/Hazard Warning Lights
Component Location Index 22-169
Circuit Diagram 22-170
DTC Troubleshooting 22-172
MICU Input Test 22-174
Hazard Warning Switch Test/Replacement 22-178
Side Turn Signal Light Replacement 22-179

Interior Lights
Component Location Index 22-180
Circuit Diagram 22-181
Front Individual Map Light Test/Replacement 22-182
Ceiling Light Test/Replacement 22-183
Trunk Light Test/Replacement 22-183
Trunk Lid Latch Switch Test 22-184

Entry Lights Control System
Component Location Index 22-185
Circuit Diagram 22-186
MICU Input Test 22-187
Ignition Key Switch Test 22-190

Power Windows
Component Location Index 22-191
System Description 22-192
Resetting the Power Window Control Unit 22-193
Circuit Diagram 22-194
Master Switch Input Test 22-196
Driver's Power Window Motor Test 22-199
Passenger's Power Window Motor Test 22-200
Master Switch Test/Replacement 22-201
Passenger's Power Window Switch Test/Replacement 22-202

Wipers/Washers

Component Location Index 22-203
Circuit Diagram 22-205
DTC Troubleshooting 22-206
MICU Input Test 22-210
Wiper/Washer Switch Test 22-213
Wiper Motor Test 22-213
Washer Motor Test 22-214
Washer Fluid Level Switch Test (Canada models) 22-214
Wiper Motor Replacement 22-215
Wiper/Washer Switch Replacement 22-216
Washer Reservoir Replacement 22-216
Wiper Blade Replacement 22-217
Wiper Arm/Nozzle Adjustment 22-218
Washer Tube Replacement 22-219

Gauges

Component Location Index 22-220
Self-diagnostic Function 22-223
Circuit Diagram 22-226
DTC Troubleshooting 22-235
Gauge Control Module (Tach) Input Test 22-248
Gauge Control Module (Speedo) Input Test 22-252
Rewriting the ODO Data and Transferring the Maintenance Minder Data to a New Gauge Control Module 22-254
Gauge Control Module Replacement 22-255
Dash Lights Brightness Controller and Odometer Select/Reset Switch Test/Replacement 22-256
Outside Air Temperature Indicator Calibration 22-257

Reminder Systems

Component Location Index 22-259
Circuit Diagram 22-260
MICU Input Test 22-262

Accessory Power Socket

Component Location Index 22-264
Circuit Diagram 22-265
Front Accessory Power Socket Test/Replacement 22-266
Console Accessory Power Socket Test/Replacement 22-267

Seat Heaters

Component Location Index 22-268
Circuit Diagram 22-270
Switch Test/Replacement 22-272
Seat Heater Test 22-272

Power Mirrors

Component Location Index 22-274
Circuit Diagram 22-275
Function Test 22-276
Power Mirror Switch Test/Replacement 22-277
Power Mirror Actuator Test 22-277
Power Mirror Actuator Replacement 22-278

Rear Window Defogger

Component Location Index 22-280
Circuit Diagram 22-281
Function Test 22-282
Defogger Wire Repair 22-283

Immobilizer System

Component Location Index 22-284
System Description 22-285
Circuit Diagram 22-286
DTC Troubleshooting 22-287
Symptom Troubleshooting Information 22-291
Symptom Troubleshooting 22-293
System Check 22-296
Status Log 22-298
Immobilizer-Keyless Control Unit Input Test 22-299
Immobilizer Key Registration 22-301
Immobilizer-Keyless Control Unit Replacement 22-302

HONDA

Special Tools

Ref. No.	Tool Number	Description	Qty
①	07WAZ-001010A	MPCS (MCIC) Service Connector	1
②	07TAZ-001020A	Back Probe Adaptor	2
③	07AAC-000A1A0	Relay Puller	1

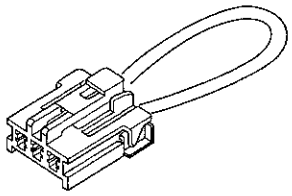

①

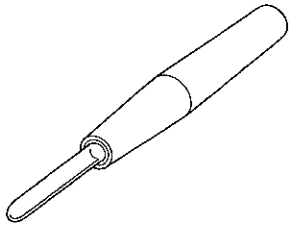

②

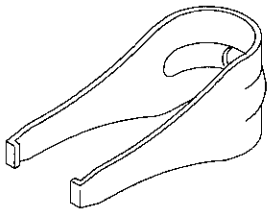

③

General Troubleshooting Information

Tips and Precautions

Before Troubleshooting

1. Check applicable fuses in the appropriate fuse/relay box.

2. Check the battery for damage, state of charge, and clean and tight connections.

NOTICE

- Do not quick-charge a battery unless the battery ground cable has been disconnected, otherwise you will damage the DC-DC converter.
- Do not attempt to crank the engine with the battery ground cable loosely connected or you will severely damage the wiring.

Handling Connectors

- Make sure the connectors are clean and have no loose wire terminals.
- Make sure multiple cavity connectors are packed with dielectric grease (except watertight connectors).
- All connectors have push-down release type locks (A).

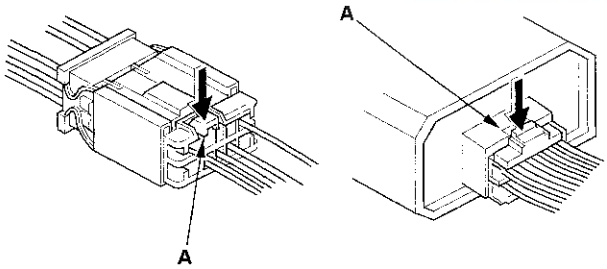

- Some connectors have a clip on their side used to attach them to a mount bracket on the body or on another component. This clip has a pull type lock.
- Some mounted connectors cannot be disconnected unless you first release the lock and remove the connector from its mount bracket (A).

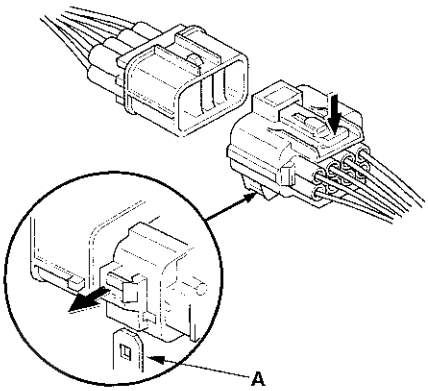

- Never try to disconnect connectors by pulling on their wires; pull on the connector halves instead.
- Always reinstall plastic covers.

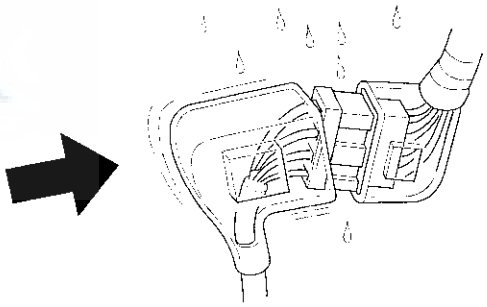

- Before connecting connectors, make sure the terminals (A) are in place and not bent.

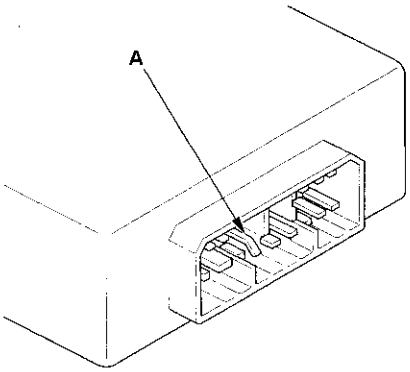

(cont'd)

General Troubleshooting Information (cont'd)

- Check for loose retainers (A) and rubber seals (B).

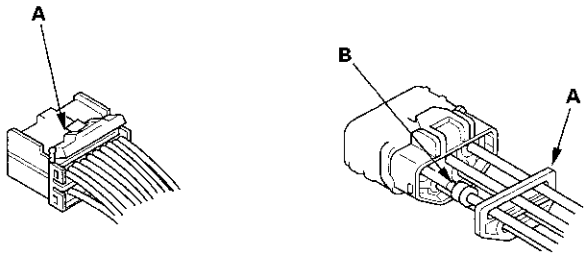

- The backs of some connectors are packed with dielectric grease. Add grease if necessary. If the grease is contaminated, replace it.

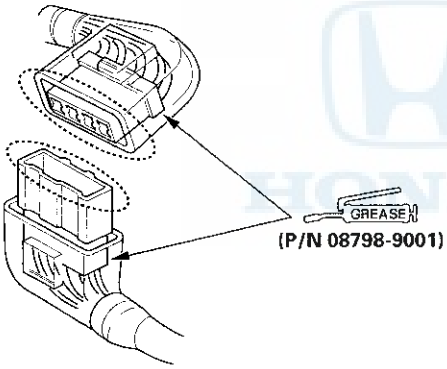

- Insert the connector all the way and make sure it is securely locked.
- Position wires so that the open end of the cover faces down.

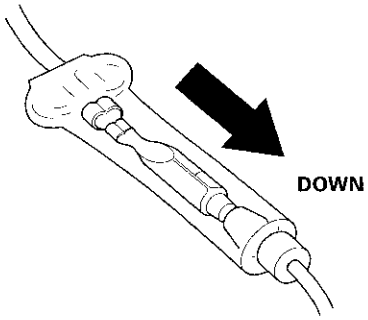

Handling Wires and Harnesses

- Secure wires and wire harnesses to the frame with their respective wire ties at the designated locations.
- Remove clips carefully; don't damage their locks (A).

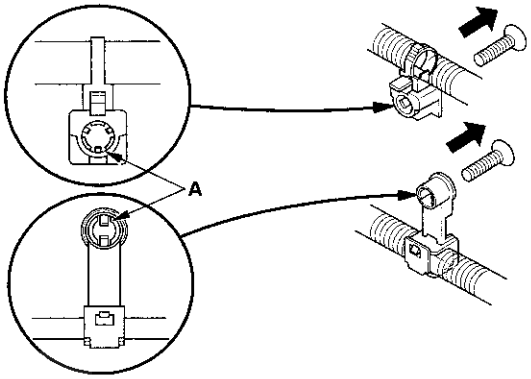

- After installing harness clips, make sure the harness doesn't interfere with any moving parts.
- Keep wire harnesses away from exhaust components and other hot parts, from sharp edges of brackets and holes, and from exposed screws and bolts.
- Seat grommets in their grooves properly (A). Do not leave grommets distorted (B).

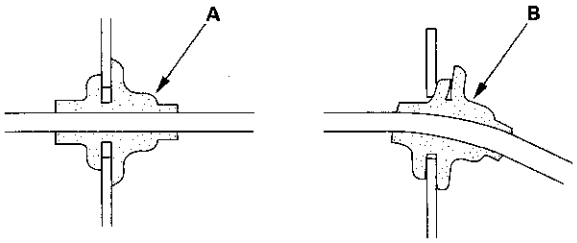

Testing and Repairs

- Do not use wires or harnesses with broken insulation. Replace them or repair them by wrapping the break with electrical tape.
- Never attempt to modify, splice, or repair SRS wiring. If there is an open or damage is SRS wiring or terminals, replace the harness.
- After installing parts, make sure that no wires are pinched under them.
- When using electrical test equipment, follow the manufacturer's instructions and those described in this manual.
- If possible, insert the probe of the tester from the wire side (except waterproof connector).

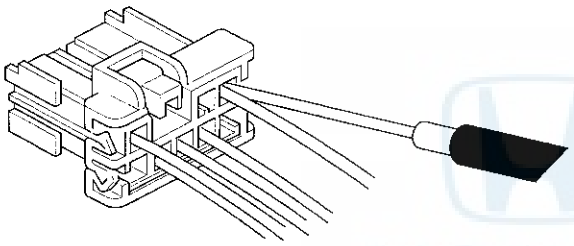

- Use back probe adaptor 07TAZ-001020A.

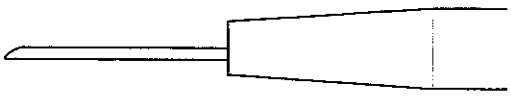

- Refer to the instructions in the Honda Terminal Kit for identification and replacement of connector terminals.

Five-step Troubleshooting

1. Verify The Complaint:
   Turn on all the components in the problem circuit to verify the client complaint. Note the symptoms. Do not begin disassembly or testing until you have narrowed down the problem area.

2. Analyze The Schematic:
   Look up the schematic for the problem circuit. Determine how the circuit is supposed to work by tracing the current paths from the power feed through the circuit components to ground. If several circuits fail at the same time, the fuse or a ground is a likely cause.

   Based on the symptoms and your understanding of the circuit operation, identify one or more possible causes of the problem.

3. Isolate The Problem By Testing The Circuit:
   Make circuit tests to check the diagnosis you made in step 2. Keep in mind that a logical, simple procedure is the key to efficient troubleshooting. Test for the most likely cause of failure first. Try to make tests at points that are easily accessible.

4. Fix The Problem:
   Once the specific problem is identified, make the repair. Be sure to use proper tools and safe procedures.

5. Make Sure The Circuit Works:
   Turn on all components in the repaired circuit in all modes to make sure you've fixed the entire problem. If the problem was a blown fuse, be sure to test all of the circuits on the fuse. Make sure no new problems turn up and the original problem does not recur.

(cont'd)

General Troubleshooting Information (cont'd)

Wire Color Codes

The following abbreviations are used to identify wire colors in the circuit schematics:

WHT	White
YEL	Yellow
BLK	Black
BLU	Blue
GRN	Green
RED	Red
ORN	Orange
PNK	Pink
BRN	Brown
GRY	Gray
PUR	Purple
LT BLU	Light Blue
LT GRN	Light Green

The wire insulation has one color or one color with another color stripe. The second color is the stripe.

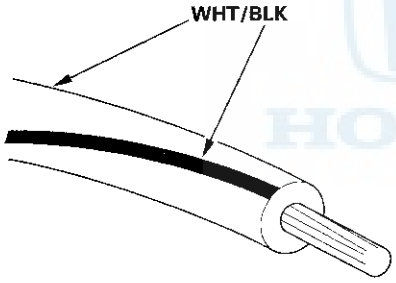

How to Check for DTCs with the Honda Diagnostic System (HDS)

NOTE: For specific operations, refer to the user's manual that came with the Honda Diagnostic System (HDS).

1. Connect the Honda Diagnostic System (HDS) to the Data Link Connector (DLC) (A) located under the driver's side of the dashboard.

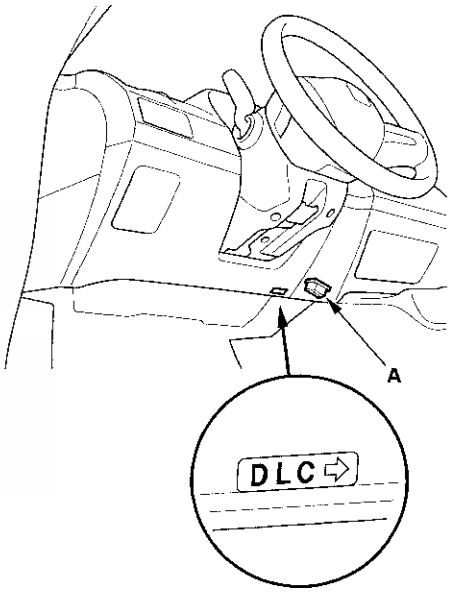

2. Turn the ignition switch to ON (II).
3. Make sure the HDS communicates with the vehicle. If it doesn't, troubleshoot the DLC circuit (see page 11-213).
4. Enter BODY ELECTRICAL, then select the TEST MODE menu.
5. Check for DTCs with the HDS.
6. If any DTCs are indicated, note them, and go to the indicated DTC troubleshooting.

Relay and Control Unit Locations

Engine Compartment

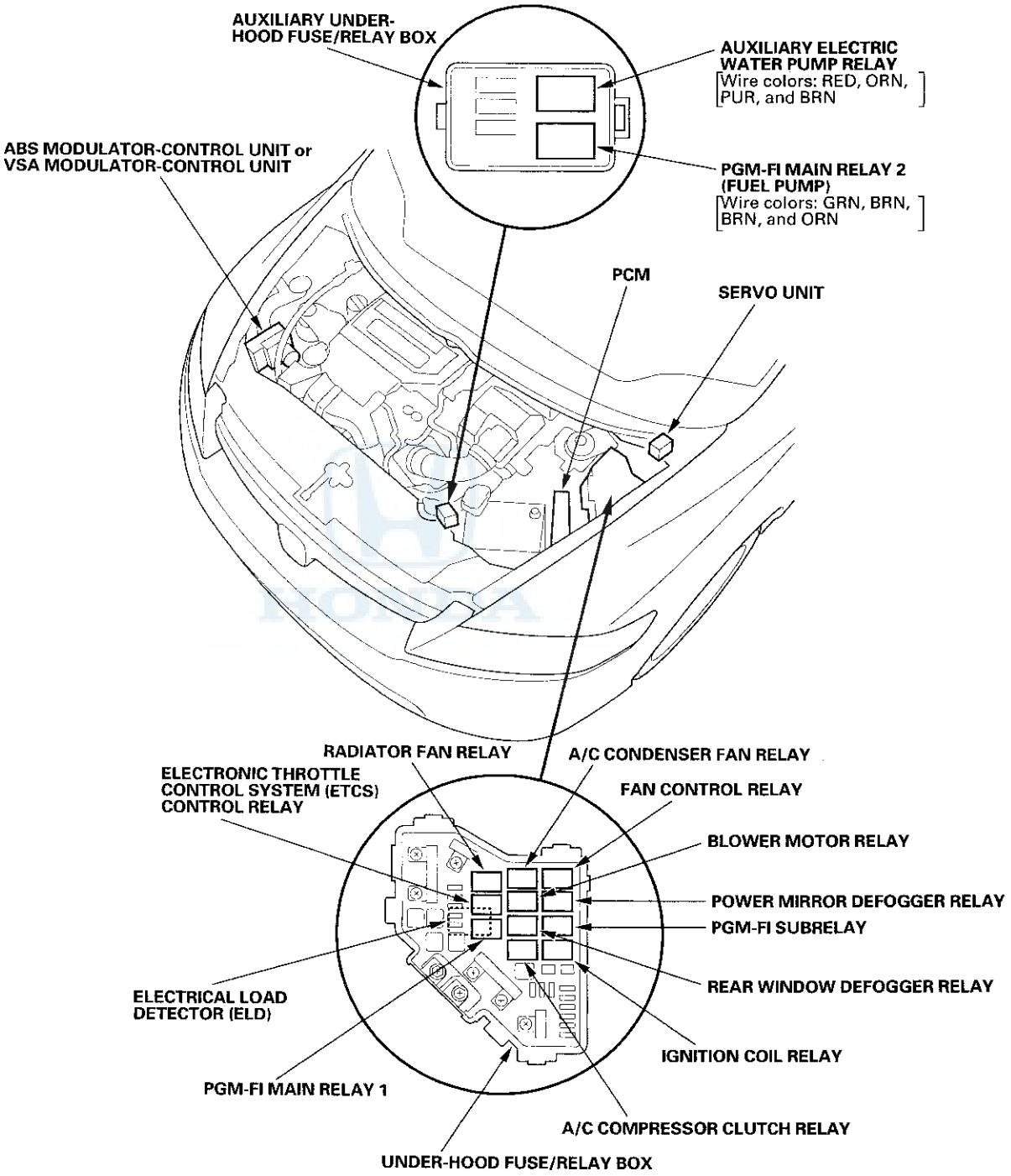

Relay and Control Unit Locations

Dashboard

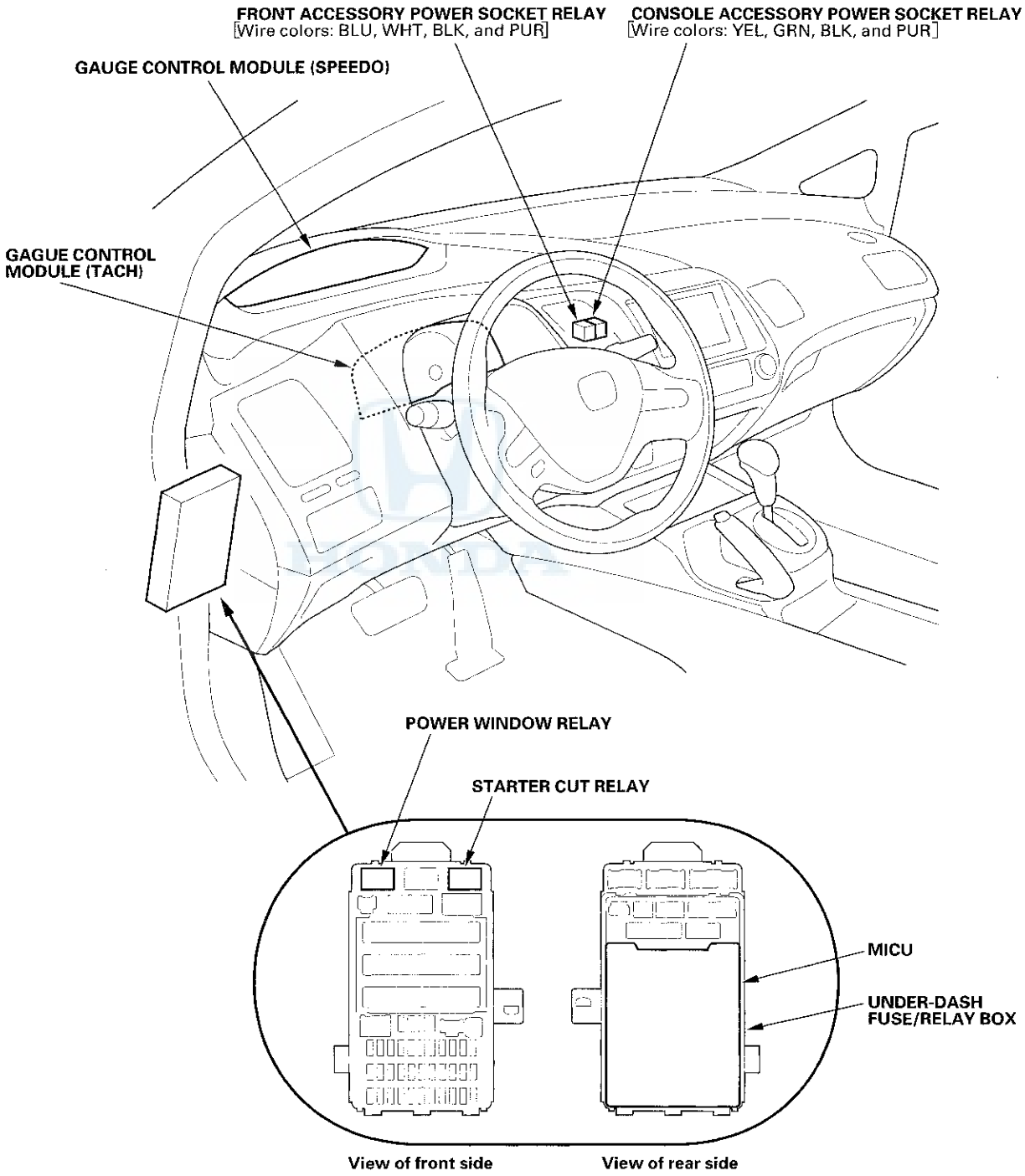

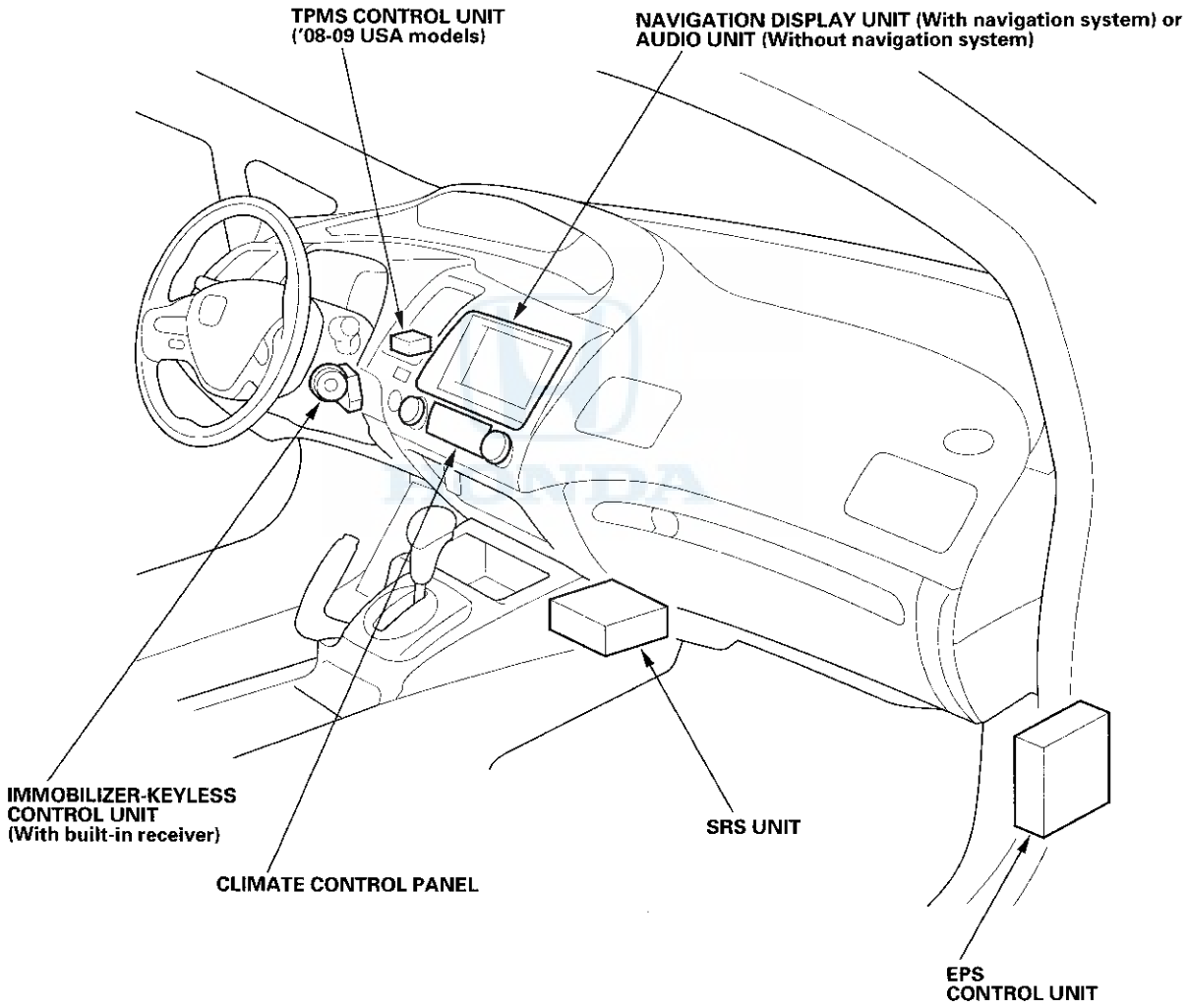
TPMS CONTROL UNIT
('08-09 USA models)
NAVIGATION DISPLAY UNIT (With navigation system) or
AUDIO UNIT (Without navigation system)
IMMOBILIZER-KEYLESS
CONTROL UNIT
(With built-in receiver)
CLIMATE CONTROL PANEL
SRS UNIT
EPS
CONTROL UNIT

Relay and Control Unit Locations

Floor and Rear

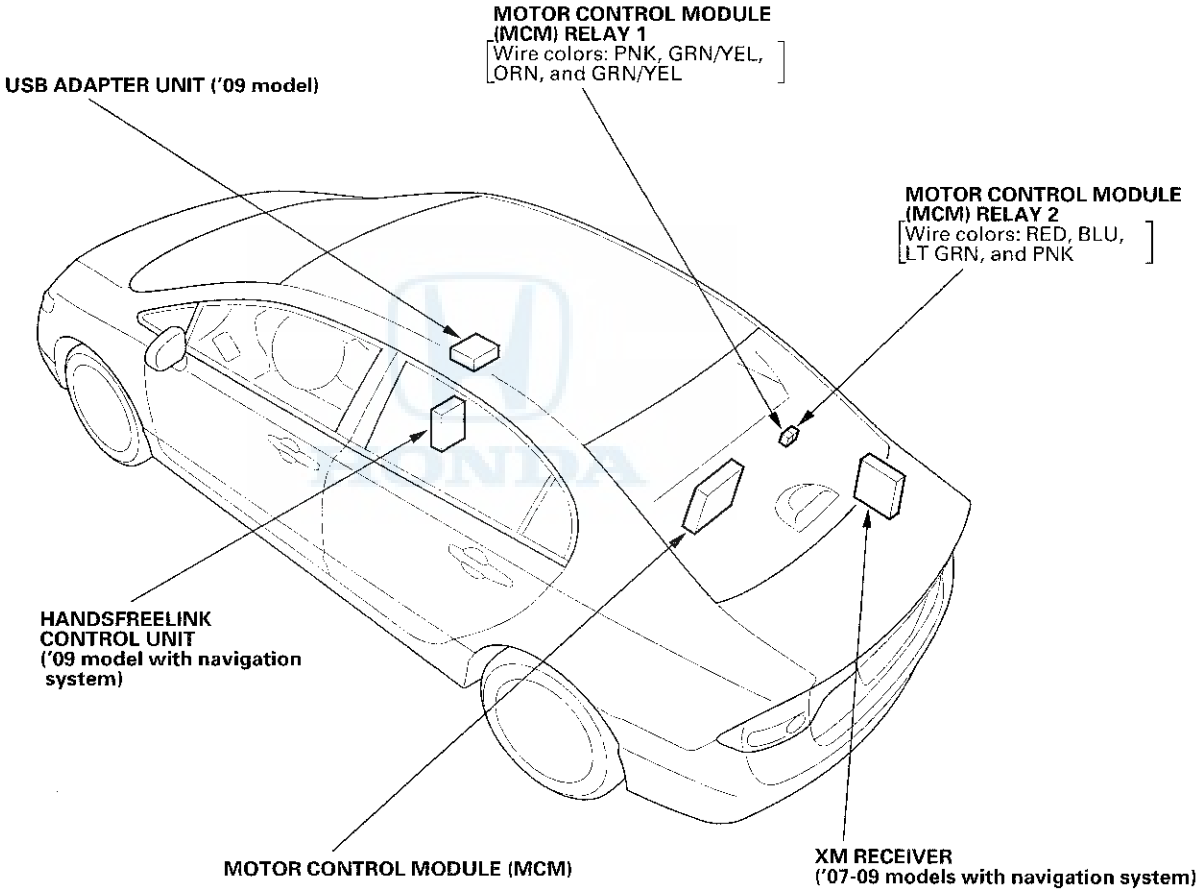

Door

Driver's Door

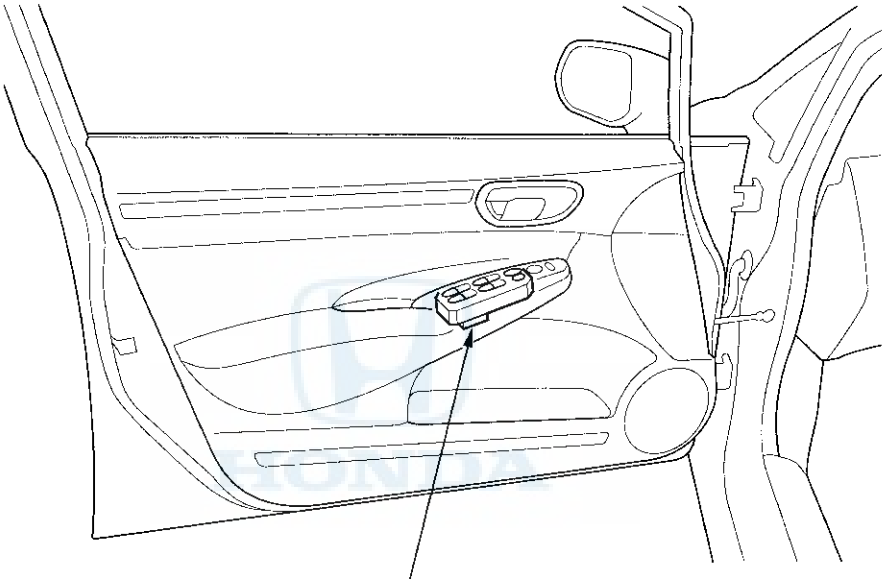

POWER WINDOW MASTER SWITCH
(Has built-in control unit)

Relay and Control Unit Locations

Seat

Driver's Seat

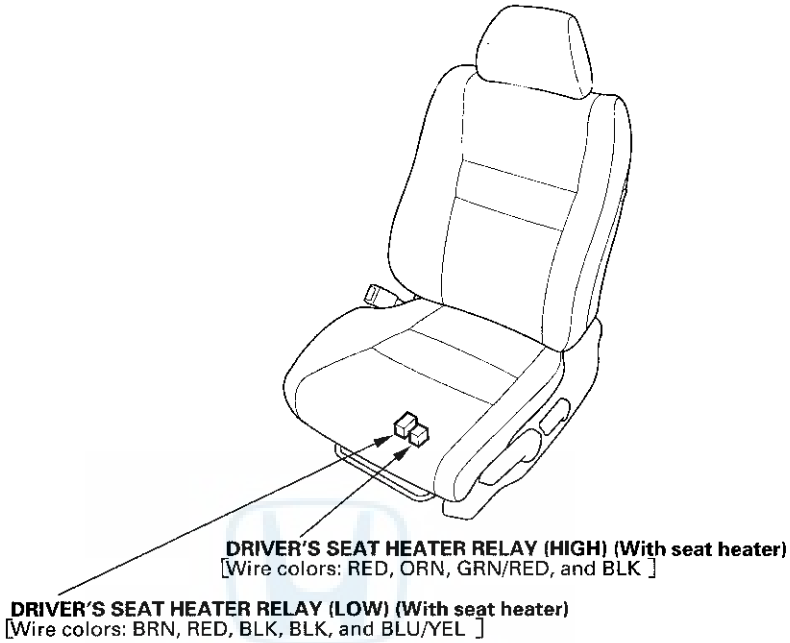

Front Passenger's Seat

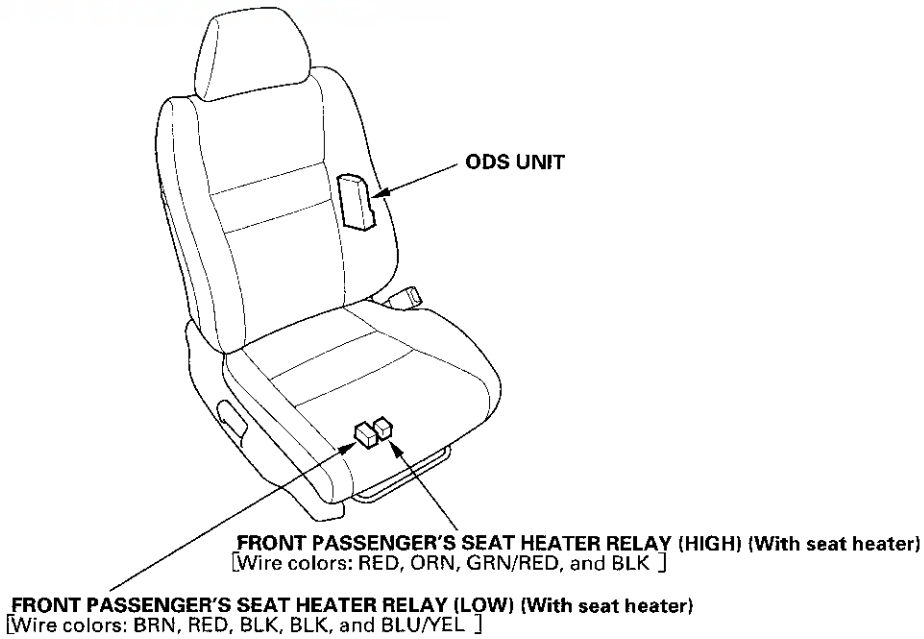

Connectors and Harnesses

Connector Index

Identification numbers have been assigned to in-line connectors, junction connectors, and terminals. The number is preceded by the letter "C" for connector, "G" for ground terminals, or "T" for non-ground terminals.

Harness	Location			
	Engine Compartment	Dashboard	Others (Floor, Door, Trunk, and Roof)	Notes
A/C wire harness		C205, C505		(see page 22-43)
Battery ground cable	(−), G1			(see page 22-14)
Console subharness		C551, C601		(see page 22-44)
Dashboard wire harness (View of driver's side)		C201, C202, C203, C501, C502, C751, C752, C801 G501, G503		(see page 22-24)
Dashboard wire harness (View of middle)		C503, C551, C552 G504, G506		(see page 22-26)
Dashboard wire harness (View of passenger's side)		C505, C761, C762 G502, G505		(see page 22-28)
DC-DC converter cable	T101		G901, G904	(see page 22-36)
Driver's door wire harness		C751, C752	C753	(see page 22-39)
Driver's seat position sensor harness*1			C602	(see page 22-45)
Driver's seat position sensor harness*2			C604	(see page 22-46)
Driver's seat wire harness*2			C602, C604	(see page 22-46)
Engine compartment wire harness (Left branch)	C101, C102, C103, C208 T5, G301	C201 through C205, C209 G401		(see page 22-18)
Engine compartment wire harness (Right branch)	C206, C207 G201, G202	G402, G403		(see page 22-22)
Engine ground cable A	T1, G2			(see page 22-14)
Engine ground cable B	T2, G3			(see page 22-14)
Engine wire harness	C101, C102, C103, C105, C106 G101, G102			(see page 22-16)
Floor wire harness (Left branch)		C204, C209, C501, C502, C552, C601	C602, C701, C771 G601, G603	(see page 22-30)
Floor wire harness (Right branch)			C651, C781, C782, C901 G602	(see page 22-32)
Front passenger's door wire harness		C761, C762		(see page 22-40)
Front passenger's seat wire harness*2			C782, C783	(see page 22-48)
Fuel pump subharness			C651	(see page 22-32)
IPU compartment wire harness			C901, C902, C903, C904 G902, G903	(see page 22-37)
IPU modulator fan subharness			C904	(see page 22-37)
Left rear door wire harness			C771	(see page 22-41)
ODS unit harness*1			C782	(see page 22-47)
ODS unit harness*2			C783	(see page 22-48)
Rear window defogger ground wire			G801	(see page 22-35)
Rear wire harness (Left branch)			C701 G701	(see page 22-34)
Rear wire harness (Right branch)				(see page 22-35)
Right rear door wire harness			C781	(see page 22-42)
Roof wire harness		C801		(see page 22-38)
Starter cable	(+), T3, T4			(see page 22-14)
USB harness*3			C671	(see page 22-30)
USB subharness*3			C671	(see page 22-44)

* 1: Without seat heater
* 2: With seat heater
* 3: '09 model

Connector to Harness Index

Battery Ground Cable

Connector or Terminal	Ref	Cavities	Location	Connects to	Notes
(−)	6		Left side of engine compartment	Battery negative terminal	
G1	4		Left side of engine compartment	Body ground, via battery ground cable	

Engine Ground Cable A

Connector or Terminal	Ref	Cavities	Location	Connects to	Notes
T1	9		Right side of engine compartment	Engine	
G2	1		Right side of engine compartment	Body ground, via engine ground cable A	

Engine Ground Cable B

Connector or Terminal	Ref	Cavities	Location	Connects to	Notes
T2	2		Left side of engine compartment	Transmission housing	
G3	3		Left side of engine compartment	Body ground, via engine ground cable B	

Starter Cable

Connector or Terminal	Ref	Cavities	Location	Connects to	Notes
(+)	7		Left side of engine compartment	Battery positive terminal	
T3	5		Left side of engine compartment	Under-hood fuse/relay box	
T4	8		Middle of engine compartment	Starter motor	

HONDA

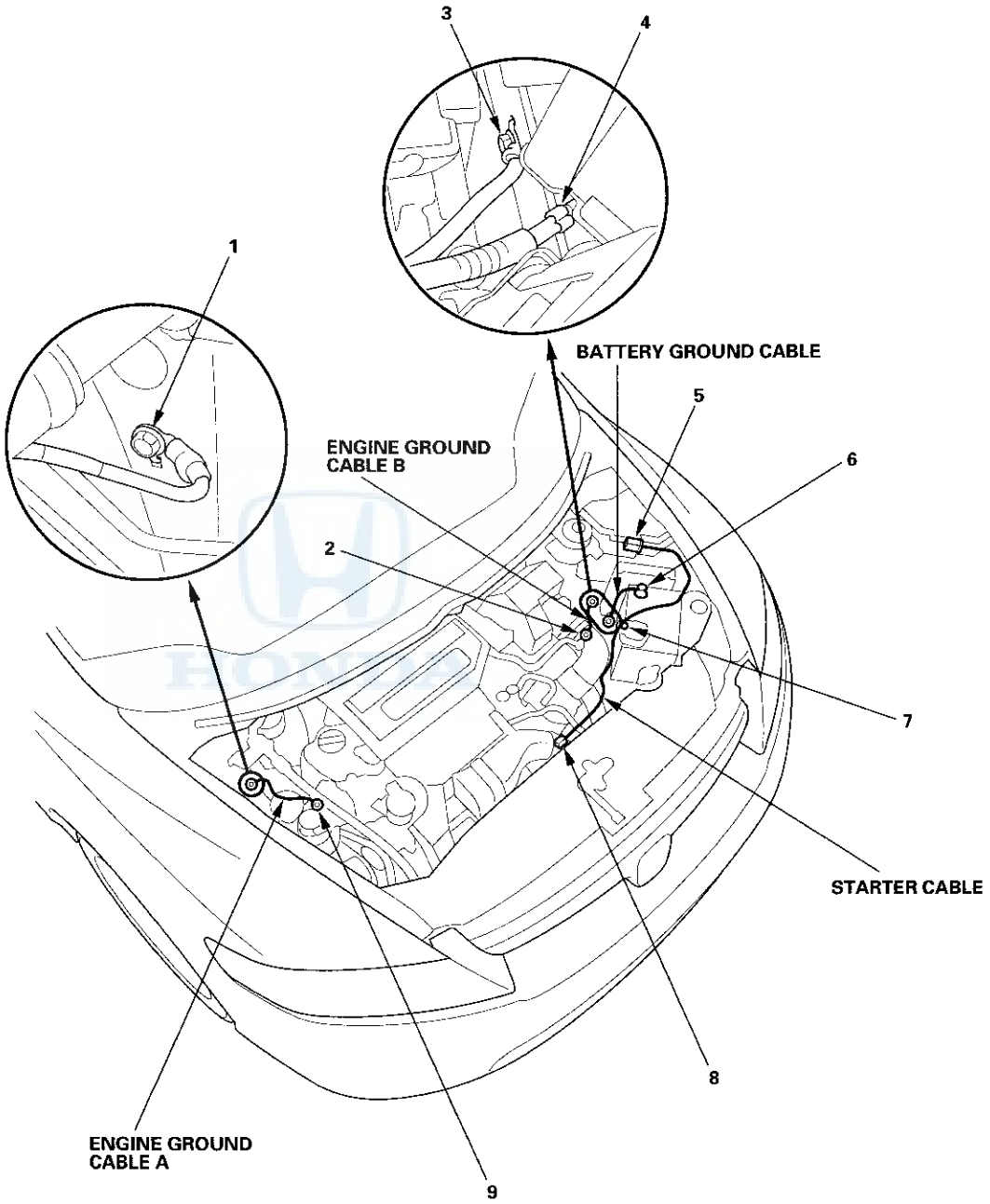
3
4
1
BATTERY GROUND CABLE
5
ENGINE GROUND
CABLE B
6
2
7
STARTER CABLE
8
ENGINE GROUND
CABLE A
9

Connector to Harness Index (cont'd)

Engine Wire Harness

Connector or Terminal	Ref	Cavities	Location	Connects to	Notes
A/C compressor clutch	43	3	Middle of engine compartment		
A/F sensor (Sensor 1)	16	4	Exhaust manifold		
Camshaft position (CMP) sensor	12	3	Middle of engine compartment		
Crankshaft position (CKP) sensor	46	3	Middle of engine compartment		
CVT drive pulley pressure control valve/CVT driven pulley pressure control valve/CVT start clutch pressure control valve/Inhibitor solenoid	33	8	Transmission housing		
CVT input shaft (Drive pulley) speed sensor	31	3	Transmission housing		
CVT output shaft (Driven pulley) speed sensor	19	3	Transmission housing		
CVT speed sensor	18	3	Transmission housing		
CVT speed sensor (Secondary)	20	3	Transmission housing		*
Engine coolant temperature (ECT) sensor 1	11	2	Middle of engine compartment		
EVAP canister purge valve	14	2	Middle of engine compartment		
Exhaust gas recirculation (EGR) valve and position sensor	45	6	Middle of engine compartment		
Exhaust side ignition coil No. 1	2	3	Middle of engine compartment		
Exhaust side ignition coil No. 2	4	3	Middle of engine compartment		
Exhaust side ignition coil No. 3	6	3	Middle of engine compartment		
Exhaust side ignition coil No. 4	8	2	Middle of engine compartment		
IMA motor	17	6	Transmission housing		
Injector No. 1	44	2	Middle of engine compartment		
Injector No. 2	39	2	Middle of engine compartment		
Injector No. 3	38	2	Middle of engine compartment		
Injector No. 4	35	2	Middle of engine compartment		
Intake side ignition coil No. 1	1	3	Middle of engine compartment		
Intake side ignition coil No. 2	3	3	Middle of engine compartment		
Intake side ignition coil No. 3	5	3	Middle of engine compartment		
Intake side ignition coil No. 4	7	3	Middle of engine compartment		
Knock sensor	40	1	Middle of engine compartment		
Manifold absolute pressure (MAP) sensor	36	3	Middle of engine compartment		
Mass air flow (MAF) sensor/Intake air temperature (IAT) sensor	27	5	Middle of engine compartment		
Oil pressure switch	41	1	Middle of engine compartment		
PCM connector B	26	44	Left side of engine compartment		
PCM connector C	25	44	Left side of engine compartment		
Rocker arm oil control solenoid 1	34	2	Middle of engine compartment		
Rocker arm oil control solenoid 2	30	2	Middle of engine compartment		
Rocker arm oil pressure sensor	9	3	Middle of engine compartment		
Rocker arm oil pressure switch	10	2	Middle of engine compartment		
Secondary HO2S (Sensor 2)	15	4	Exhaust manifold		
Starter solenoid	37	1	Middle of engine compartment		
Throttle position sensor	29	6	Middle of engine compartment		
Transmission range switch	24	8	Transmission housing		
C101	23	23	Left side of engine compartment	Engine compartment wire harness (see page 22-18)	
C102	22	1	Left side of engine compartment	Engine compartment wire harness (see page 22-18)	
C103	21	6	Middle of engine compartment	Engine compartment wire harness (see page 22-18)	
C105 (Junction connector)	28	24	Middle of engine compartment		
C106 (Junction connector)	13	12	Middle of engine compartment		
G101	42		Middle of engine compartment	Body ground, via engine wire harness	
G102	32		Middle of engine compartment	Body ground, via engine wire harness	

*: '06 model

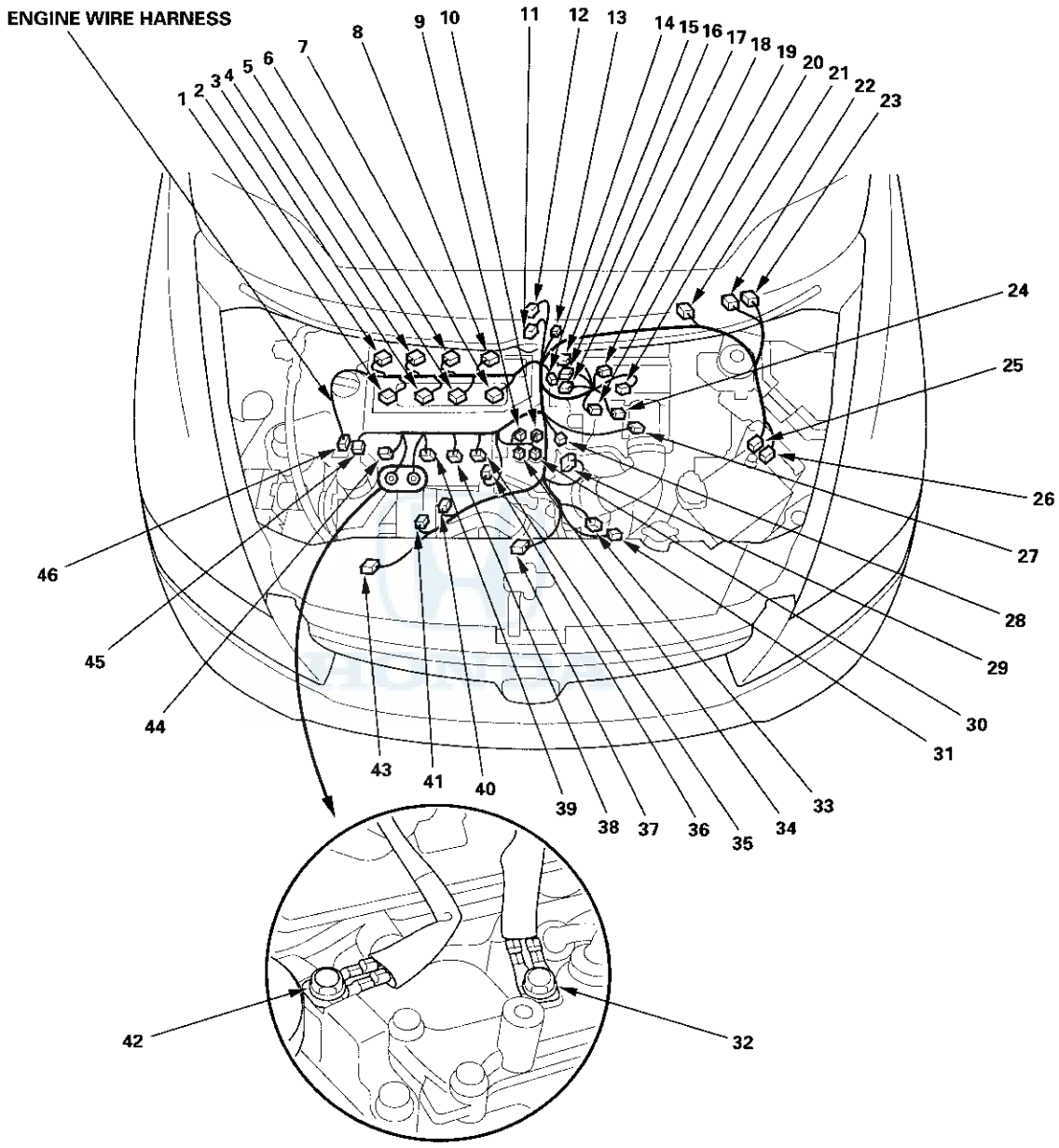
ENGINE WIRE HARNESS
1
2
3
4
5
6
7
8
9
10
11
12
13
14
15
16
17
18
19
20
21
22
23
24
25
26
27
28
29
30
31
32
33
34
35
36
37
38
39
40
41
42
43
44
45
46

Connector to Harness Index (cont'd)

Engine Compartment Wire Harness (Left branch)

Connector or Terminal	Ref	Cavities	Location	Connects to	Notes
A/C condenser fan motor	1	2	Front of engine compartment		
APP sensor	7	6	Under left side of dash		
Auxiliary electric water pump	25	2	Left side of engine compartment		
Auxiliary electric water pump relay	5	4	Auxiliary under-hood fuse/relay box		
Brake fluid level switch	9	2	Left side of engine compartment		
Brake pedal position switch	12	4	Under left side of dash		
Brake pedal stroke sensor	13	3	Under right side of dash		
ECT sensor 2	43	2	Front of engine compartment		
Hood switch (security)	3	2	Front of engine compartment		
Horn	40	1	Behind left side of front bumper		
Left front impact sensor	37	2	Under left headlight		
Left front turn signal/parking lights	36	3	Behind left headlight		
Left front wheel speed sensor	45	2	Left side of engine compartment		
Left headlight (high beam)	41	2	Behind left headlight		
Left headlight (low beam)	38	2	Behind left headlight		
Optional connector (for fog light)	14	1	Under left side of dash		
Outside air temperature sensor	42	2	Front of engine compartment		
PCM connector A	46	44	Left side of engine compartment		
PGM-FI main relay 2	4	4	Auxiliary under-hood fuse/relay box		
Radiator fan motor	44	2	Front of engine compartment		
Servo unit	23	25	Left side of engine compartment		
Test tachometer connector	2	2	Middle of engine compartment		*
Under-dash fuse/relay box connector F (see page 22-50)	15	34	Under left side of dash		
Under-dash fuse/relay box connector G (see page 22-50)	16	21	Under left side of dash		
Under-hood fuse/relay box connector A (ELD) (see page 22-49)	28	3	Behind under-hood fuse/relay box		
Under-hood fuse/relay box connector B (see page 22-49)	29	1	Behind under-hood fuse/relay box		
Under-hood fuse/relay box connector C (see page 22-49)	30	2	Behind under-hood fuse/relay box		
Under-hood fuse/relay box connector D (see page 22-49)	32	8	Behind under-hood fuse/relay box		
Under-hood fuse/relay box connector E (see page 22-49)	31	10	Behind under-hood fuse/relay box		
Under-hood fuse/relay box connector F (see page 22-49)	34	20	Behind under-hood fuse/relay box		
Under-hood fuse/relay box connector G (see page 22-49)	26	1	Behind under-hood fuse/relay box		
Under-hood fuse/relay box connector H (see page 22-49)	27	1	Behind under-hood fuse/relay box		
Under-hood fuse/relay box connector J (see page 22-49)	33	4	Behind under-hood fuse/relay box		
Under-hood fuse/relay box connector K (see page 22-49)	35	2	Behind under-hood fuse/relay box		

*: '06-08 Canada models

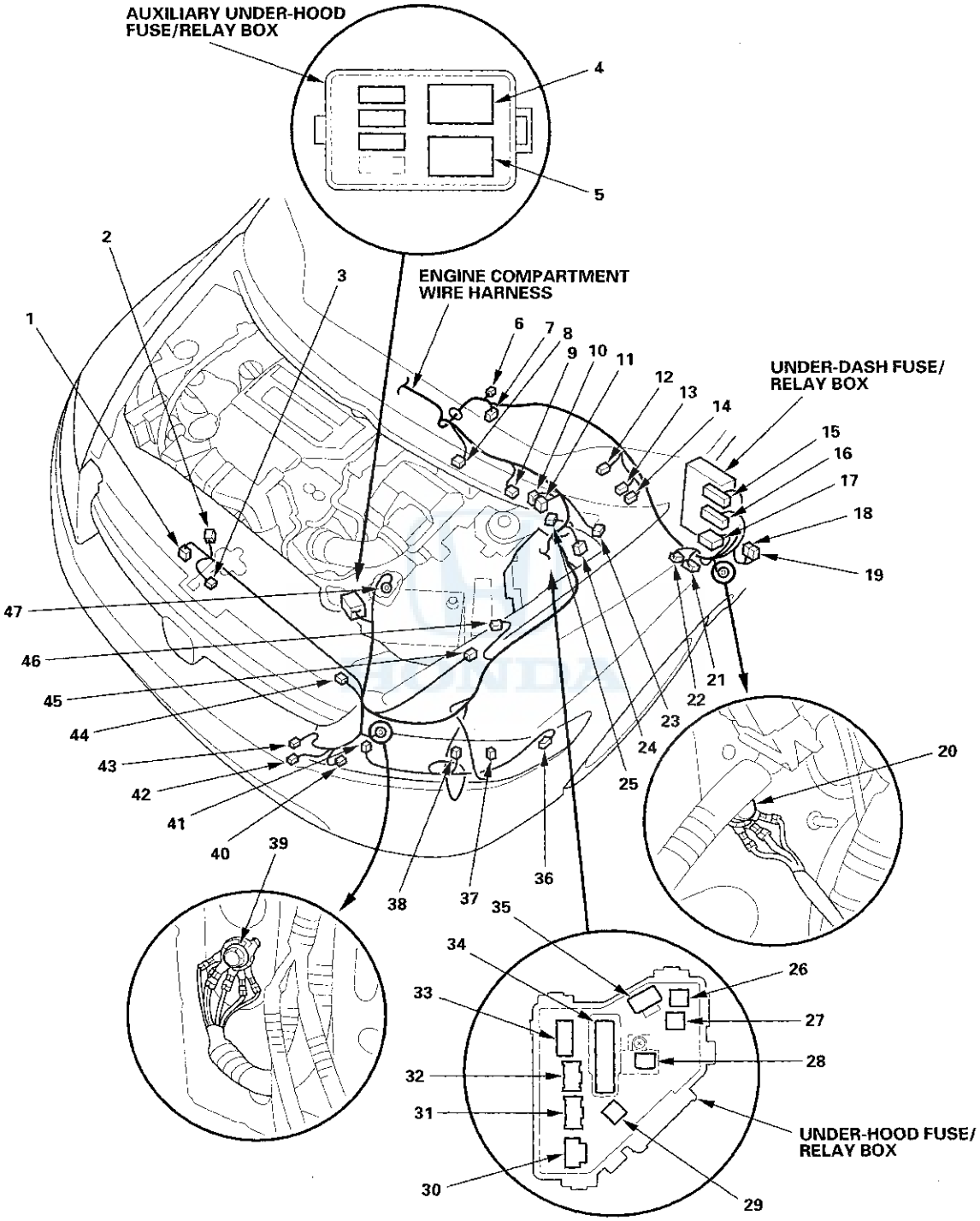
AUXILIARY UNDER-HOOD FUSE/RELAY BOX
ENGINE COMPARTMENT WIRE HARNESS
UNDER-DASH FUSE/ RELAY BOX
UNDER-HOOD FUSE/ RELAY BOX
1
2
3
4
5
6
7
8
9
10
11
12
13
14
15
16
17
18
19
20
21
22
23
24
25
26
27
28
29
30
31
32
33
34
35
36
37
38
39
40
41
42
43
44
45
46
47

(cont'd)

Connector to Harness Index (cont'd)

Engine Compartment Wire Harness (Left branch)

Connector or Terminal	Ref	Cavities	Location	Connects to	Notes
C101	11	23	Left side of engine compartment	Engine wire harness (see page 22-16)	
C102	10	1	Left side of engine compartment	Engine wire harness (see page 22-16)	
C103	8	6	Middle of engine compartment	Engine wire harness (see page 22-16)	
C201	19	14	Under left side of dash	Dashboard wire harness (see page 22-24)	
C202	18	20	Under left side of dash	Dashboard wire harness (see page 22-24)	
C203	17	4	Under left side of dash	Dashboard wire harness (see page 22-24)	
C204	21	14	Under left side of dash	Floor wire harness (see page 22-30)	* 1
C204	21	16	Under left side of dash	Floor wire harness (see page 22-30)	* 2
C205	6	2	Under left side of dash	A/C wire harness (see page 22-43)	
C208 (Junction connector)	24	6	Left side of engine compartment		* 3
C209	22	14	Under left side of dash	Floor wire harness (see page 22-30)	
T5	47		Left side of engine compartment	Battery positive terminal	
G301	39		Left side of engine compartment	Body ground, via engine compartment wire harness	
G401	20		Left kick panel	Body ground, via engine compartment wire harness	

* 1: '06 model
* 2: '07-09 models
* 3: '06-08 models

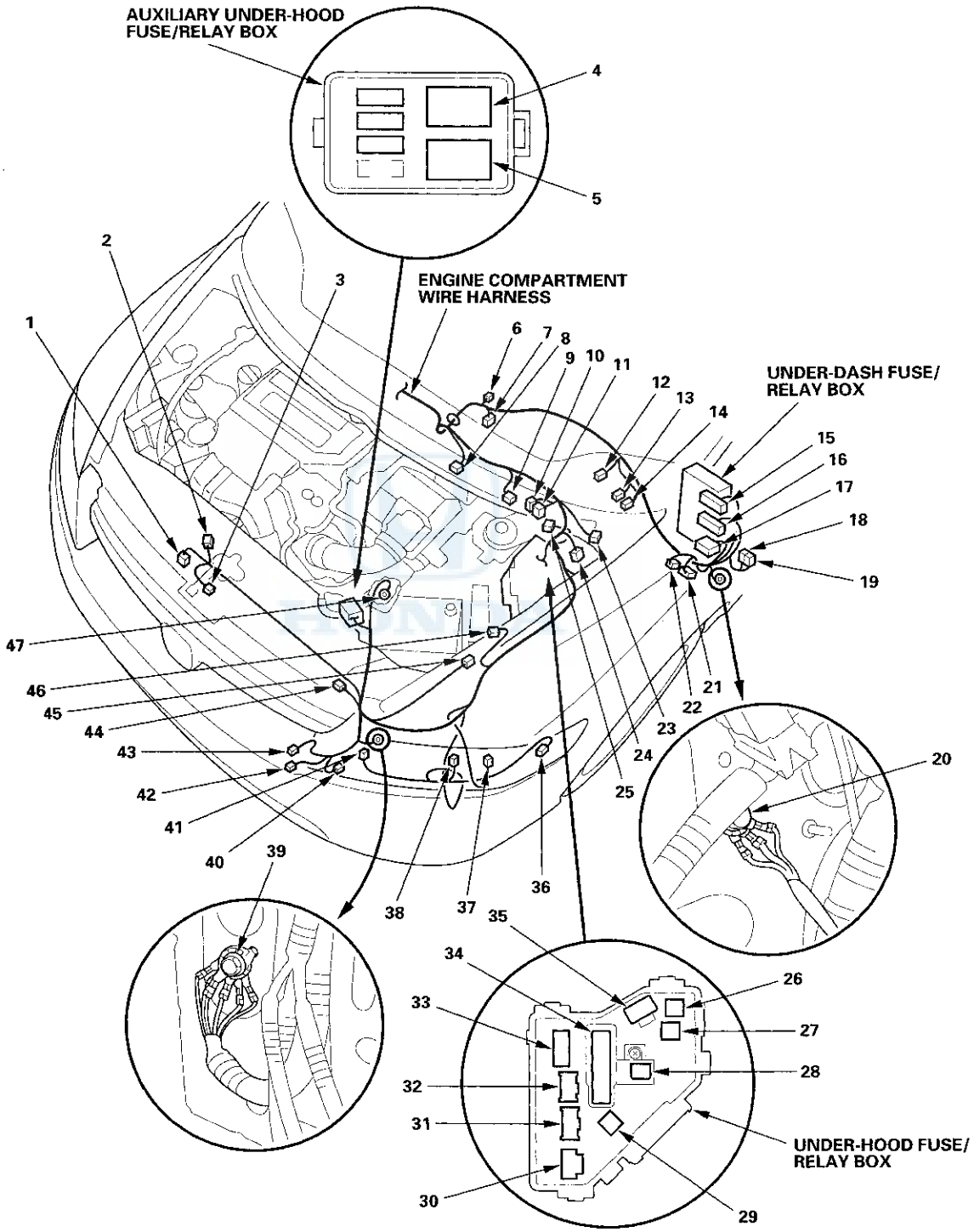
AUXILIARY UNDER-HOOD FUSE/RELAY BOX
ENGINE COMPARTMENT WIRE HARNESS
UNDER-DASH FUSE/ RELAY BOX
UNDER-HOOD FUSE/ RELAY BOX
1
2
3
4
5
6
7
8
9
10
11
12
13
14
15
16
17
18
19
20
21
22
23
24
25
26
27
28
29
30
31
32
33
34
35
36
37
38
39
40
41
42
43
44
45
46
47

Connector to Harness Index (cont'd)

Engine Compartment Wire Harness (Right branch)

Connector or Terminal	Ref	Cavities	Location	Connects to	Notes
A/C pressure sensor	15	3	Right side of engine compartment		
ABS modulator-control unit	18	25	Right side of engine compartment		* 4
EPS control unit connector A	26	2	Under right side of dash		
EPS control unit connector B	24	2	Under right side of dash		
EPS control unit connector C	23	2	Under right side of dash		
EPS control unit connector D	25	28	Under right side of dash		
EPS motor A	22	2	Right side of engine compartment		
EPS motor B	21	1	Right side of engine compartment		
Motor rotor position sensor	5	6	Right side of engine compartment		
Optional connector (for fog light)	13	1	Behind right headlight		
Power unit	20	2	Right side of engine compartment		
Right front impact sensor	14	2	Under right headlight		
Right front turn signal/parking lights	16	3	Behind right headlight		
Right front wheel speed sensor	19	2	Right side of engine compartment		
Right headlight (high beam)	7	2	Behind right headlight		
Right headlight (low beam)	12	2	Behind right headlight		
Torque sensor	6	4	Right side of engine compartment		
VSA modulator-control unit	18	37	Right side of engine compartment		* 5
Windshield washer fluid level switch	11	2	Behind right side of front bumper		* 1
Windshield washer motor	10	2	Behind right side of front bumper		
Windshield wiper motor	3	5	Under right side of windshield		
C206 (Junction connector)	17	6	Right side of engine compartment		* 2
C207 (Junction connector)	4	6	Right side of engine compartment		* 2
C207 (Junction connector)	4	12	Right side of engine compartment		* 3
G201	8		Right side of engine compartment	Body ground, via engine compartment wire harness	
G202	9		Right side of engine compartment	Body ground, via engine compartment wire harness	
G402	1		Under right side of dash	Body ground, via engine compartment wire harness	
G403	2		Under right side of dash	Body ground, via engine compartment wire harness	

* 1: Canada models
* 2: '06-08 models
* 3: '09 model
* 4: Without VSA
* 5: With VSA

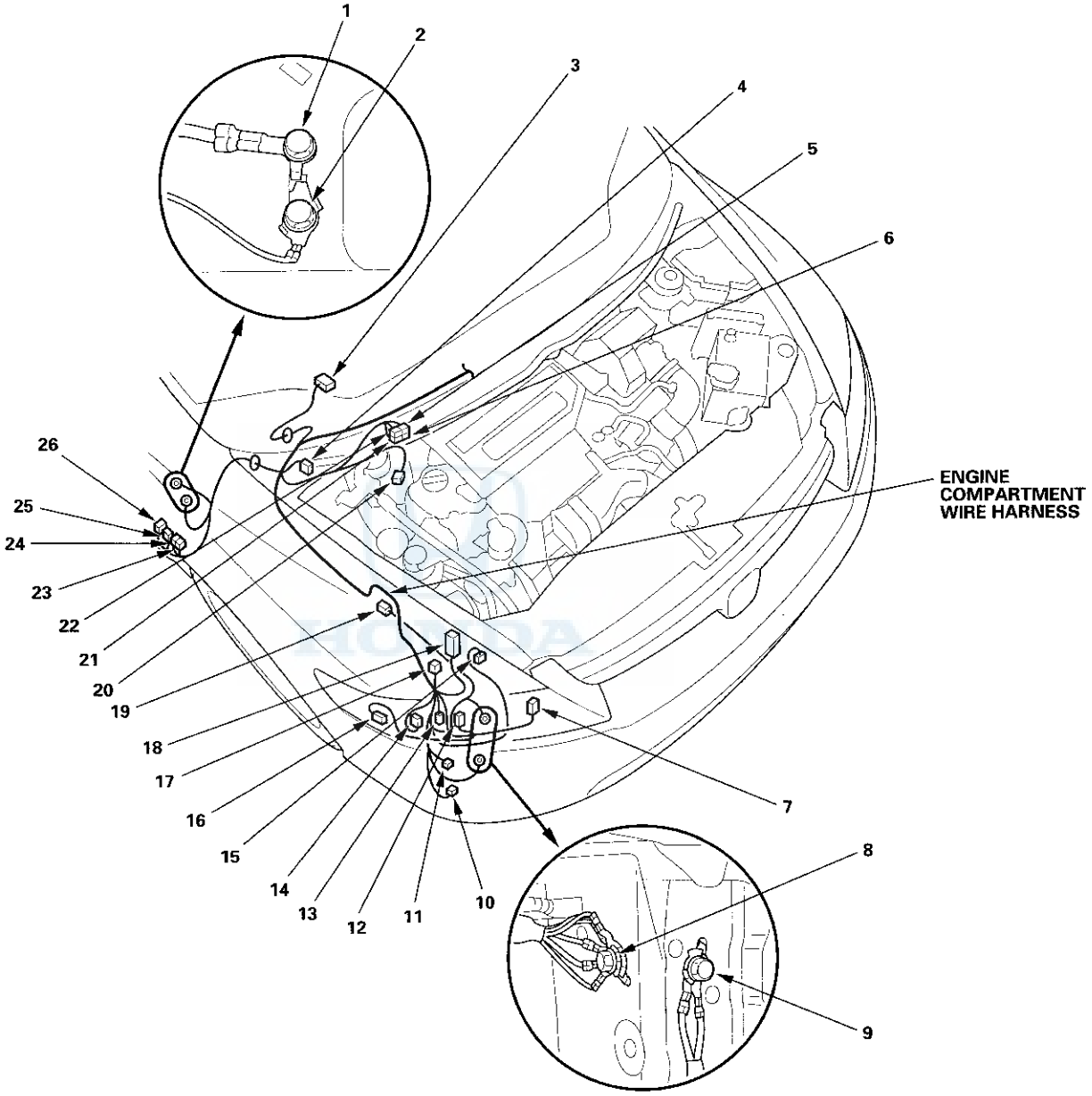
1
2
3
4
5
6
7
8
9
10
11
12
13
14
15
16
17
18
19
20
21
22
23
24
25
26
ENGINE COMPARTMENT WIRE HARNESS

Connector to Harness Index (cont'd)

Dashboard Wire Harness (View of driver's side)

Connector or Terminal	Ref	Cavities	Location	Connects to	Notes
AHB buzzer	28	2	Left side of dash		
Dash lights brightness controller	15	7	Left side of dash		
Gauge control module (speedo)	11	12	Behind gauge		
Gauge control module (tach)	12	36	Behind gauge		
Left tweeter	1	2	Left side of dash		
Memory erase signal (MES) connector	19	2	Left kick panel		
Under-dash fuse/relay box connector C (see page 22-50)	18	4	Left kick panel		
Under-dash fuse/relay box connector D (see page 22-50)	17	2	Left kick panel		
Under-dash fuse/relay box connector J (see page 22-50)	3	4	Left kick panel		
Under-dash fuse/relay box connector K (see page 22-50)	4	8	Left kick panel		
Under-dash fuse/relay box connector M (see page 22-50)	6	10	Left kick panel		
Under-dash fuse/relay box connector N (see page 22-50)	8	14	Left kick panel		
Under-dash fuse/relay box connector P (see page 22-50)	5	10	Left kick panel		
Under-dash fuse/relay box connector Q (see page 22-50)	7	16	Left kick panel		
Under-dash fuse/relay box connector R (see page 22-50)	9	20	Left kick panel		
Under-dash fuse/relay box connector S (see page 22-50)	10	20	Under left side of dash		
Under-dash fuse/relay box connector T (see page 22-50)	2	34	Under left side of dash		
VSA OFF switch	16	5	Left side of dash		* 3
C201	25	14	Under left side of dash	Engine compartment wire harness (see page 22-18)	
C202	24	20	Under left side of dash	Engine compartment wire harness (see page 22-18)	
C203	20	4	Under left side of dash	Engine compartment wire harness (see page 22-18)	
C501	22	23	Under left side of dash	Floor wire harness (see page 22-30)	
C502	23	20	Under left side of dash	Floor wire harness (see page 22-30)	
C751	26	23	Under left side of dash	Driver's door wire harness (see page 22-39)	
C752	27	18	Under left side of dash	Driver's door wire harness (see page 22-39)	
C801	21	6	Under left side of dash	Roof wire harness (see page 22-38)	* 2
C801	21	20	Under left side of dash	Roof wire harness (see page 22-38)	* 1
G501	14		Under left side of dash	Body ground, via dashboard wire harness	
G503	13		Under left side of dash	Body ground, via dashboard wire harness	

* 1: With navigation system
* 2: Without navigation system
* 3: With VSA

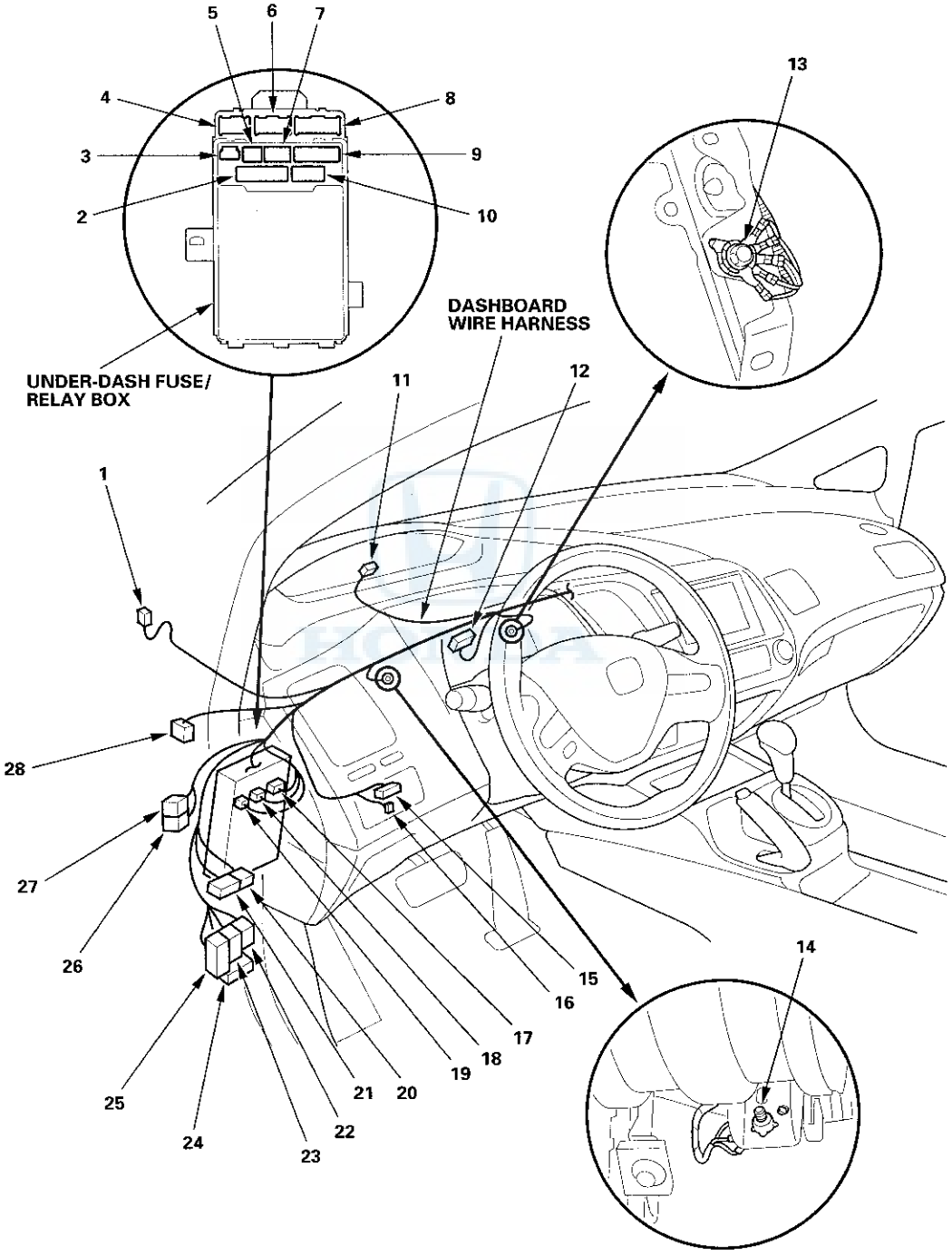
5
6
7
4
8
3
9
2
10
13
DASHBOARD
WIRE HARNESS
UNDER-DASH FUSE/
RELAY BOX
11
12
1
28
27
26
25
24
23
22
21
20
19
18
17
16
15
14

Connector to Harness Index (cont'd)

Dashboard Wire Harness (View of middle)

Connector or Terminal	Ref	Cavities	Location	Connects to	Notes
Audio unit connector A	25	17	Middle of dash		* 4
Audio unit connector B	26	20	Middle of dash		* 4
Auxiliary jack assembly	36	5	Middle of dash		
Console accessory power socket relay	13	4	Under left side of dash		
Data link connector	35	16	Middle of dash		
Front accessory power socket	33	2	Middle of dash		
Front accessory power socket relay	16	4	Under left side of dash		
Hazard warning switch	37	5	Middle of dash		
Humidity sensor	38	2	Middle of dash		
Under-dash junction box connector A	7	6	Under left side of dash		
Under-dash junction box connector B	8	6	Under left side of dash		
Under-dash junction box connector C	2	14	Under left side of dash		
Under-dash junction box connector D	5	6	Under left side of dash		
Under-dash junction box connector E	6	18	Under left side of dash		
Under-dash junction box connector F	9	10	Under left side of dash		
Under-dash junction box connector G	4	14	Under left side of dash		
Under-dash junction box connector H	12	10	Under left side of dash		
Under-dash junction box connector J	10	22	Under left side of dash		
Under-dash junction box connector K	3	14	Under left side of dash		
Under-dash junction box connector L	11	10	Under left side of dash		
Under-dash junction box connector M	1	10	Under left side of dash		
Navigation unit connector A	24	17	Middle of dash		* 1
Navigation unit connector A	24	24	Middle of dash		* 2
Navigation unit connector B	21	22	Middle of dash		* 1
Navigation unit connector B	21	24	Middle of dash		* 2
Navigation unit connector C	20	12	Middle of dash		* 1
Navigation unit connector C	20	8	Middle of dash		* 2
Navigation unit connector D	23	5	Middle of dash		* 1
Navigation unit connector D	23	12	Middle of dash		* 2
Navigation unit connector E	22	14	Middle of dash		* 3
Navigation unit connector F	24	5	Middle of dash		* 3
Optional connector (for auxiliary jack)	34	6	Under left side of dash		
Optional connector (I/F box connector A)	18	20	Under left side of dash		* 5
Optional connector (I/F box connector B)	19	16	Under left side of dash		* 5
Optional connector (I/F box connector C)	27	2	Under left side of dash		* 5
Optional connector (I/F box connector D)	28	2	Under left side of dash		* 5
Passenger's airbag cutoff indicator	39	4	Middle of dash		
SRS unit connector A	32	28	Under left side of dash		
Sunlight sensor	17	2	Under left of dash		
TPMS control unit	40	20	Under left side of dash		* 6
C503 (Junction connector)	15	12	Under left side of dash		
C551	30	24	Under center console	Console subharness (see page 22-44)	* 7
C552	29	4	Under center console	Floor wire harness (see page 22-30)	* 7
G504	14		Under middle of dash	Body ground, via floor wire harness	
G506	31		Under middle of dash	Body ground, via floor wire harness	

* 1: '06-08 models with navigation system
* 2: '09 model with navigation system
* 3: With navigation system
* 4: Without navigation system
* 5: '06 USA CARLINK
* 6: '08-09 USA models
* 7: '09 model

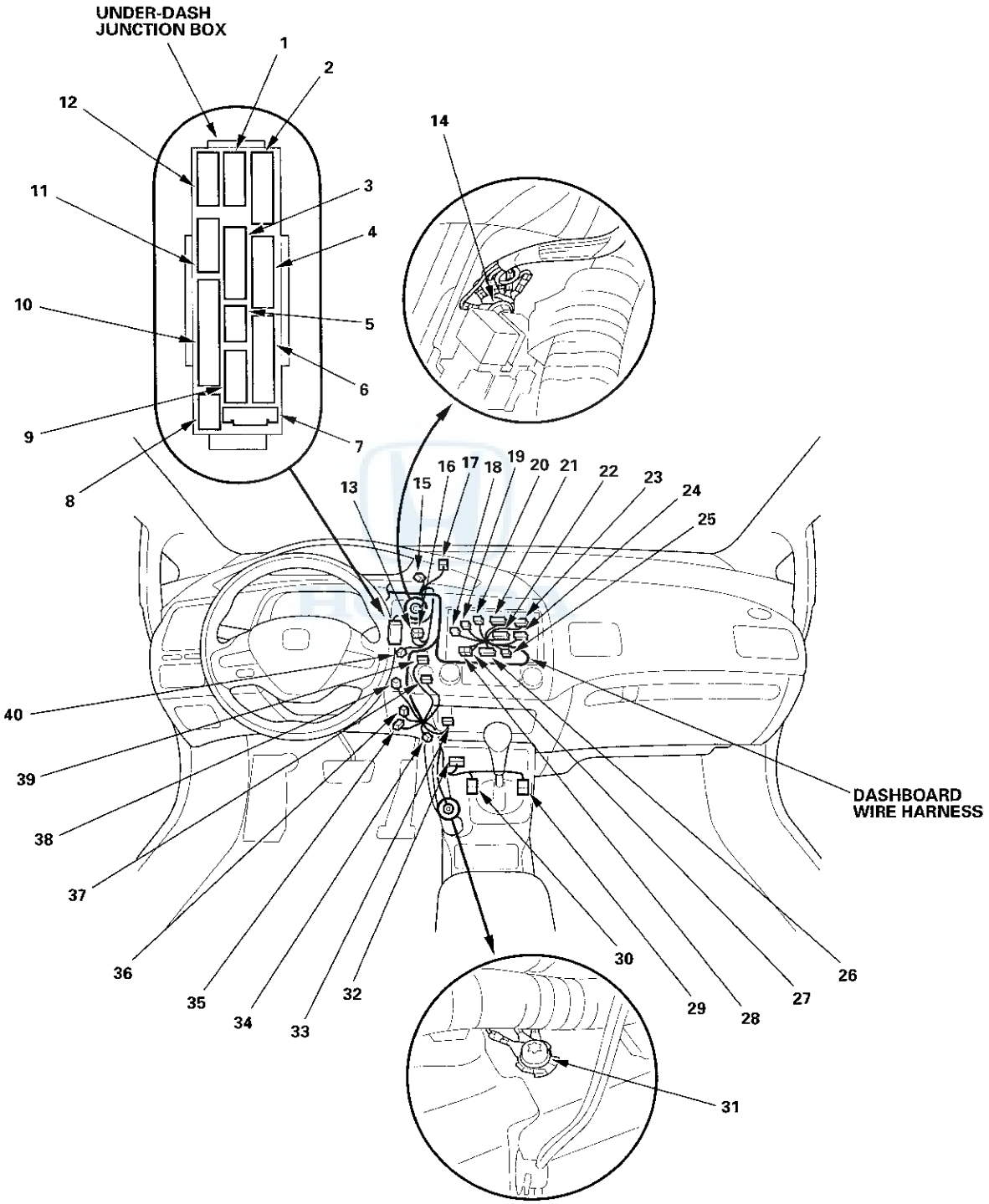
UNDER-DASH
JUNCTION BOX
1
2
3
4
5
6
7
8
9
10
11
12
13
14
15
16
17
18
19
20
21
22
23
24
25
26
27
28
29
30
31
32
33
34
35
36
37
38
39
40
DASHBOARD
WIRE HARNESS

Connector to Harness Index (cont'd)

Dashboard Wire Harness (View of passenger's side)

Connector or Terminal	Ref	Cavities	Location	Connects to	Notes
Cable reel connector A	16	4	In steering column cover	Driver's airbag inflator	
Cable reel connector B	2	20	In steering column cover	Steering switches (audio, cruise, navigation, horn)	
Climate control unit connector A	12	32	Middle of dash		
Climate control unit connector B	11	16	Middle of dash		
Combination light switch	1	12	In steering column cover		
Ignition key switch	14	6	In steering column cover		
Ignition switch	13	7	In steering column cover		
Immobilizer-keyless control unit	15	7	In steering column cover		
Passenger's airbag inflator	8	4	Under right side of dash		
Right tweeter	4	2	Right side of dash		
Steering angle sensor	17	5	In steering column cover		* 3
Wiper/washer switch	3	8	In steering column cover		
C505	9	24	Behind left side of glove box	A/C wire harness (see page 22-43)	* 1
C505	9	20	Behind left side of glove box	A/C wire harness (see page 22-43)	* 2
C761	5	23	Under right side of dash	Front passenger's door wire harness (see page 22-40)	
C762	6	18	Under right side of dash	Front passenger's door wire harness (see page 22-40)	
G502	7		Under right side of dash	Body ground, via dashboard wire harness	
G505	10		Behind left side of glove box	Body ground, via dashboard wire harness	

* 1: '06-07 models
* 2: '08-09 models
* 3: '09 model

HONDA

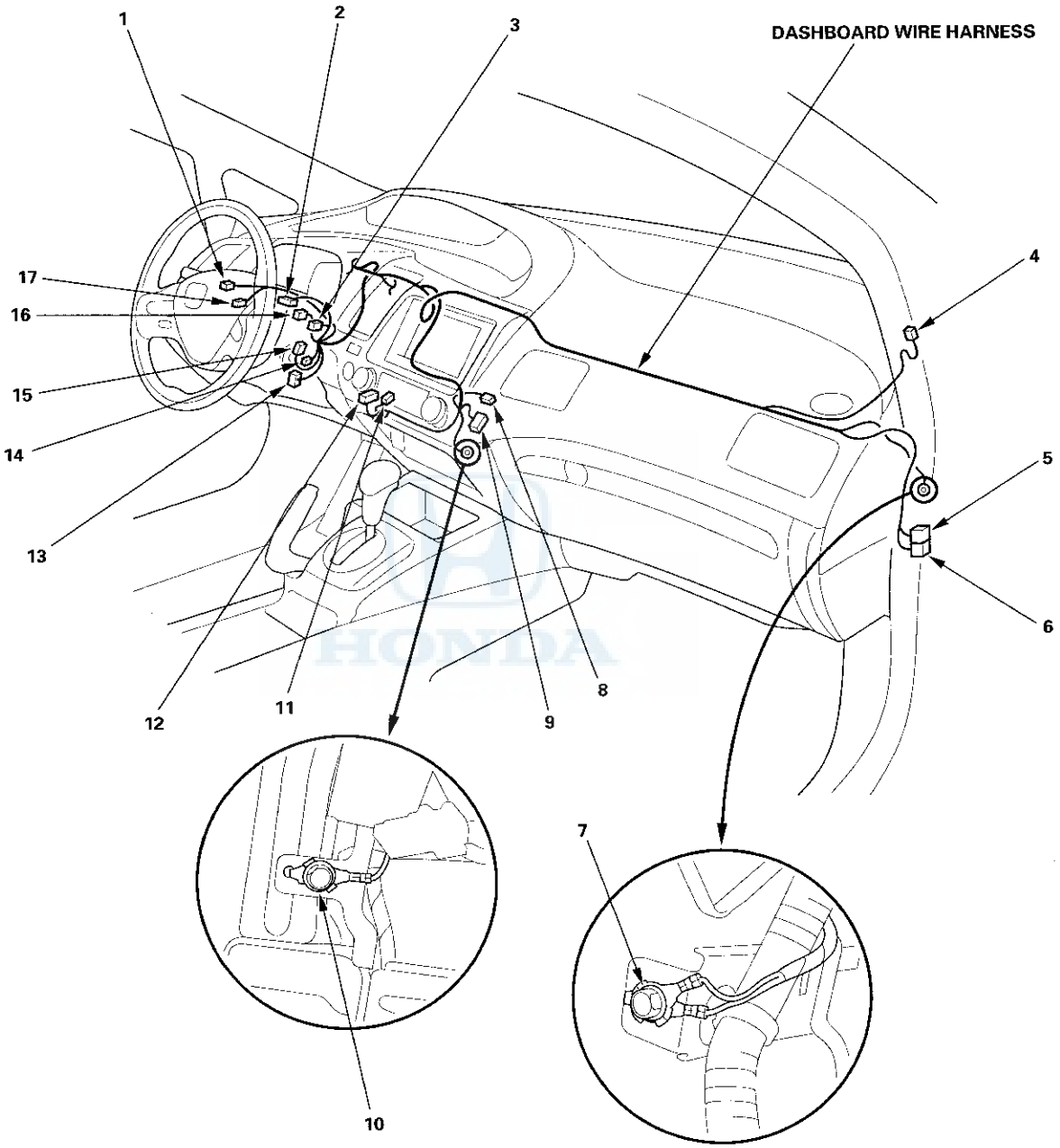
DASHBOARD WIRE HARNESS
1
2
3
4
5
6
7
8
9
10
11
12
13
14
15
16
17

Connector to Harness Index (cont'd)

Floor Wire Harness (Left branch)

Connector or Terminal	Ref	Cavities	Location	Connects to	Notes
A/T gear position indicator panel light	12	4	Under center console		
Driver's buckle tensioner	31	4	Under driver's seat		
Driver's door switch	29	1	Left B-pillar		
Driver's seat belt buckle switch	25	3	Under driver's seat		
Driver's seat belt tensioner	27	4	Left B-pillar		
Driver's side airbag inflator	24	2	Under driver's seat		
Junction board connector	14	12	Middle of floor		* 7
Junction board connector	15	12	Middle of floor		* 7
Left rear door switch	20	1	Left C-pillar		
Left rear wheel speed sensor	23	2	Under left side of floor		
Left side curtain airbag	17	2	Left C-pillar		
Left side impact sensor (FIRST)	30	4	Left side of floor		
Left side impact sensor (SECOND)	22	2	Left side of floor		
Noise condenser (for rear window defogger)	21	2	Left C-pillar		
Parking brake switch	13	1	Under console panel		
Rear window defogger connector A (+)	16	1	Left C-pillar		
Shift lock solenoid	11	2	Under console panel		
SRS unit connector B	7	28	Under middle of dash		
Under-dash fuse/relay box connector E (see page 22-50)	5	42	Left kick panel		
Yaw rate-lateral acceleration sensor	6	5	Under middle of dash		* 8
C204	3	14	Under left side of dash	Engine compartment wire harness (see page 22-18)	* 1
C204	3	16	Under left side of dash	Engine compartment wire harness (see page 22-18)	* 2
C209	4	14	Under left side of dash	Engine compartment wire harness (see page 22-18)	
C501	2	23	Under left side of dash	Dashboard wire harness (see page 22-24)	
C502	1	20	Under left side of dash	Dashboard wire harness (see page 22-24)	
C552	8	4	Under middle of dash	Dashboard wire harness (see page 22-26)	* 4
C601	10	2	Under middle of dash	Console subharness (see page 22-44)	* 3
C601	10	13	Under middle of dash	Console subharness (see page 22-44)	* 4
C602	24	2	Under driver's seat	Driver's seat position sensor harness (see page 22-45)	* 5
C602	24	8	Under driver's seat	Driver's seat wire harness (see page 22-46)	* 6
C701	19	14	Left C-pillar	Rear wire harness (see page 22-34)	
C771	26	18	Left B-pillar	Left rear door wire harness (see page 22-41)	
G601	27		Under driver's seat	Body ground, via floor wire harness	
G603	13		Left side of floor	Body ground, via floor wire harness	

* 1: '06 model
* 2: '07-09 models
* 3: '06-08 models
* 4: '09 model
* 5: Without seat heater
* 6: With seat heater
* 7: '09 model with navigation system
* 8: With VSA

USB Harness

Connector or Terminal	Ref	Cavities	Location	Connects to	Notes
C671	9	5	Under middle of dash	USB subharness (see page 22-44)	*

* : '09 model

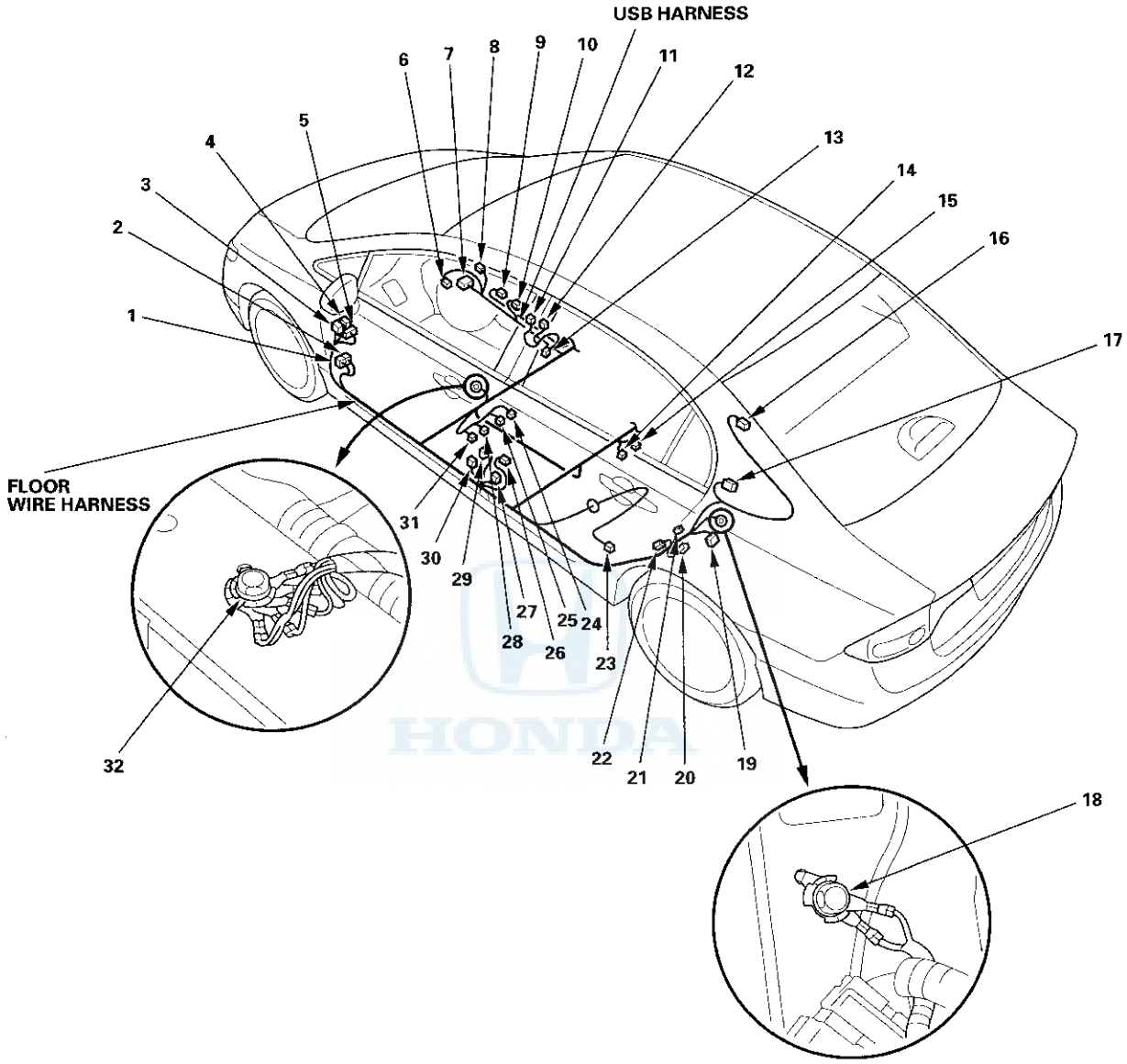
USB HARNESS
FLOOR
WIRE HARNESS
1
2
3
4
5
6
7
8
9
10
11
12
13
14
15
16
17
18
19
20
21
22
23
24
25
26
27
28
29
30
31
32

Connector to Harness Index (cont'd)

Floor Wire Harness (Right branch)

Connector or Terminal	Ref	Cavities	Location	Connects to	Notes
EVAP canister vent shut valve	3	2	Fuel tank		
Front passenger's buckle tensioner	15	4	Under front passenger's seat		
Front passenger's door switch	8	1	Right B-pillar		
Front passenger's seat belt buckle switch	14	3	Under front passenger's seat		
Front passenger's seat belt tensioner	11	4	Right B-pillar		
Front passenger's side airbag inflator	12	2	Under front passenger's seat		
Fuel tank pressure (FTP) sensor	2	3	Fuel tank		
Rear safing sensor	4	4	Middle of floor		
Right rear door switch	17	1	Right C-pillar		
Right rear wheel speed sensor	19	2	Right side of floor		
Right side curtain airbag	21	2	Right side of floor		
Right side impact sensor (FIRST)	9	4	Right side of floor		
Right side impact sensor (SECOND)	18	2	Right side of floor		
USB adapter unit connector A	6	15	Under front passenger's seat		* 2
XM receiver	20	14	Right side of trunk		* 1
C651	1	4	Middle of floor	Fuel pump subharness	
C781	10	18	Right B-pillar	Right rear door wire harness (see page 22-42)	
C782	13	4	Under front passenger's seat	ODS unit harness (see page 22-47)	* 3
C782	13	8	Under front passenger's seat	Front passenger's seat wire harness (see page 22-48)	* 4
C901	16	20	Right side of floor	IPU compartment wire harness (see page 22-37)	
G602	7		Under front passenger's seat	Body ground, via floor wire harness	

* 1: '07-09 models with navigation system
* 2: '09 model
* 3: Without seat heater
* 4: With seat heater

Fuel Pump Subharness

Connector or Terminal	Ref	Cavities	Location	Connects to	Notes
Fuel tank unit (fuel pump and fuel gauge sending unit)	22	4	Fuel tank		
C651	1	4	Middle of floor	Floor wire harness	

USB Harness

Connector or Terminal	Ref	Cavities	Location	Connects to	Notes
USB adapter unit connector B	5	5	Under front passenger's seat		*

*: '09 model

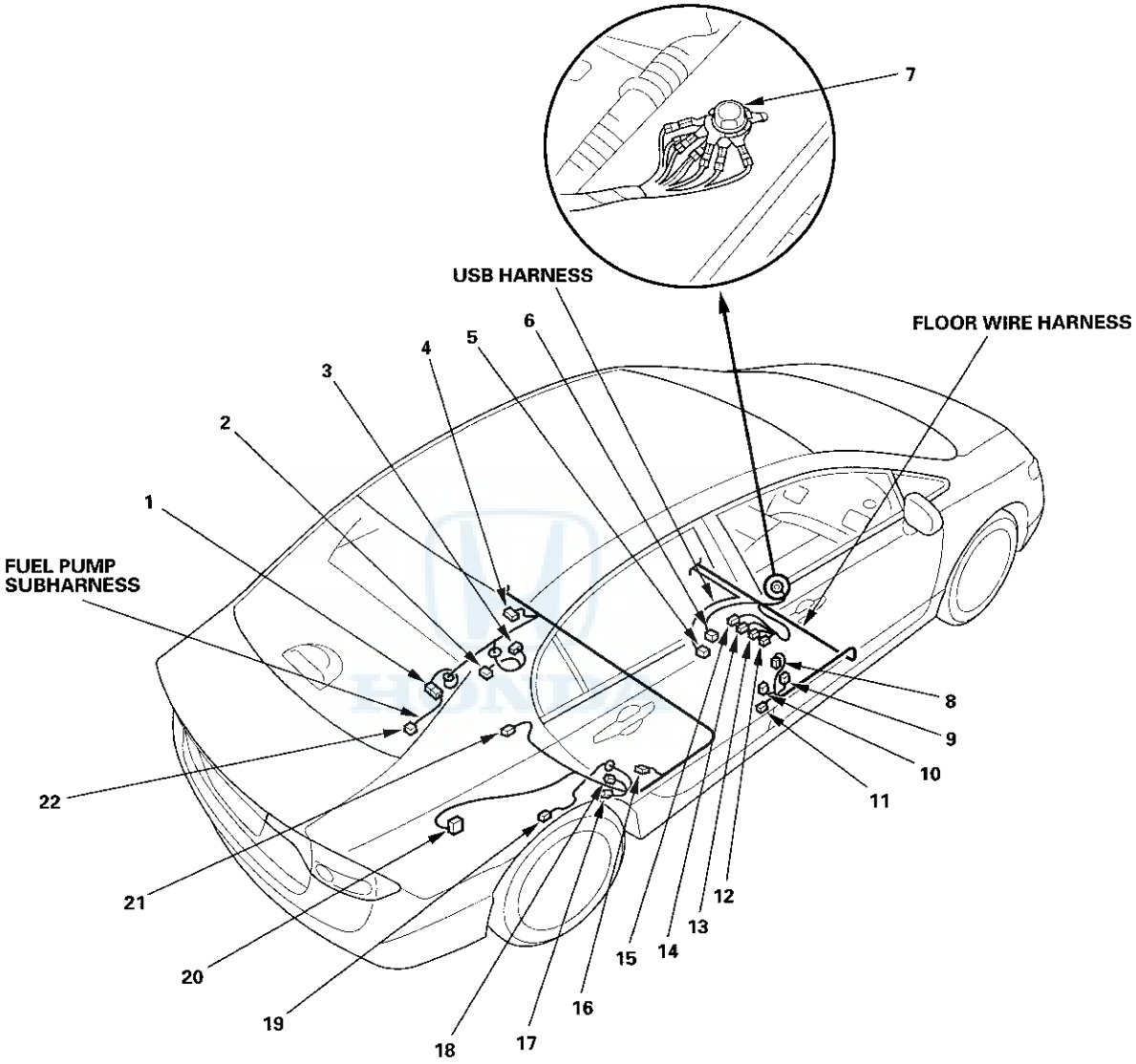
7
USB HARNESS
FLOOR WIRE HARNESS
6
5
4
3
2
1
FUEL PUMP
SUBHARNESS
8
9
10
11
22
21
20
19
18
17
16
15
14
13
12

Connector to Harness Index (cont'd)

Rear Wire Harness (Left branch)

Connector or Terminal	Ref	Cavities	Location	Connects to	Notes
High mount brake light	2	2	Middle of rear shelf		
Left back-up light	10	2	Behind left taillight		
Left inner taillight	7	2	Behind left side of trunk lid		
Left license plate light	6	2	Behind middle of trunk lid		
Left taillight/brake light	8	4	Behind left taillight		
Left rear side marker light	12	2	Behind left taillight		
Left rear speaker	13	2	Left rear shelf		
Left rear turn signal light	11	3	Behind left taillight		
Right license plate light	4	2	Behind middle of trunk lid		
Right rear speaker	1	2	Right rear shelf		
Trunk lid latch switch	5	2	Middle of trunk lid		* 1
Trunk light	3	2	Middle of rear shelf		
Trunk lid release actuator/trunk lid latch switch	5	3	Middle of trunk lid		* 2
C701	14	14	Left C-pillar	Floor wire harness (see page 22-30)	
G701	9		Left side of trunk	Body ground, via rear wire harness	

* 1: '06-08 Canada models
* 2: '06-08 USA models, and '09 model

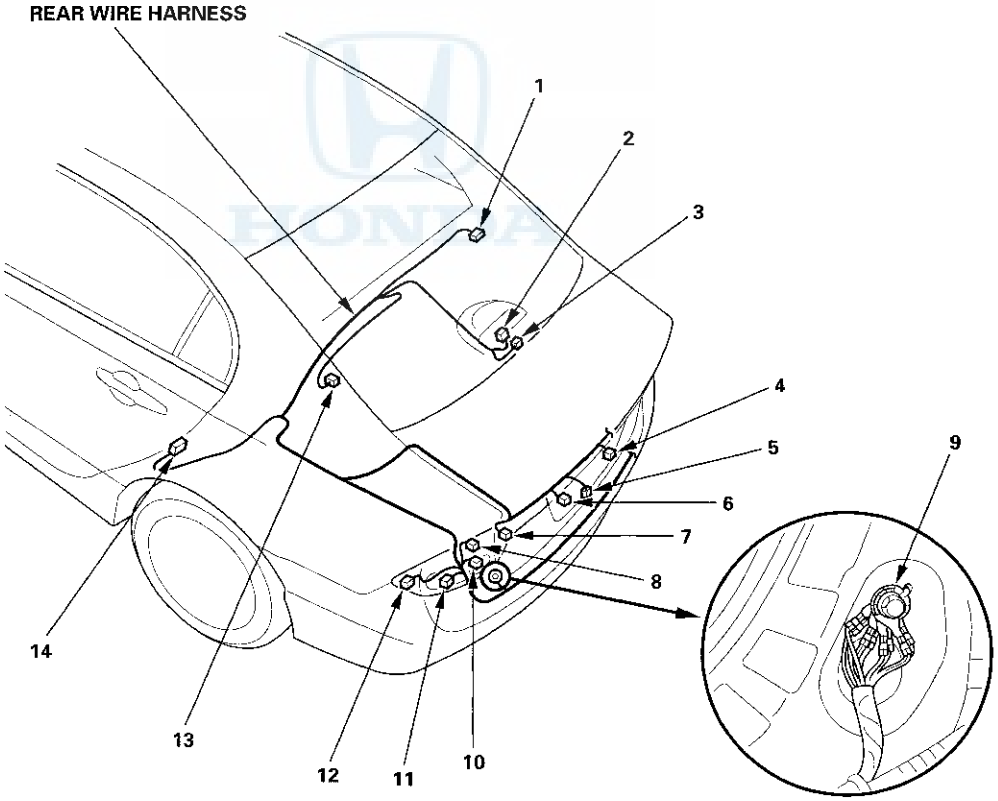

Rear Wire Harness (Right branch)

Connector or Terminal	Ref	Cavities	Location	Connects to	Notes
Right back-up light	5	2	Behind right taillight		
Right inner taillight	7	2	Behind right side of trunk lid		
Right taillight/brake light	6	4	Behind right taillight		
Right rear side marker light	3	2	Behind right taillight		
Right rear turn signal light	4	3	Behind right taillight		
Trunk key cylinder switch	8	3	Middle of trunk lid		*

* : '06-08 models

Rear Window Defogger Ground Wire

Connector or Terminal	Ref	Cavities	Location	Connects to	Notes
Rear window defogger connector (B) (—)	1	1	Right C-pillar		
G801	2		Right C-pillar	Body ground, via rear window defogger ground wire	

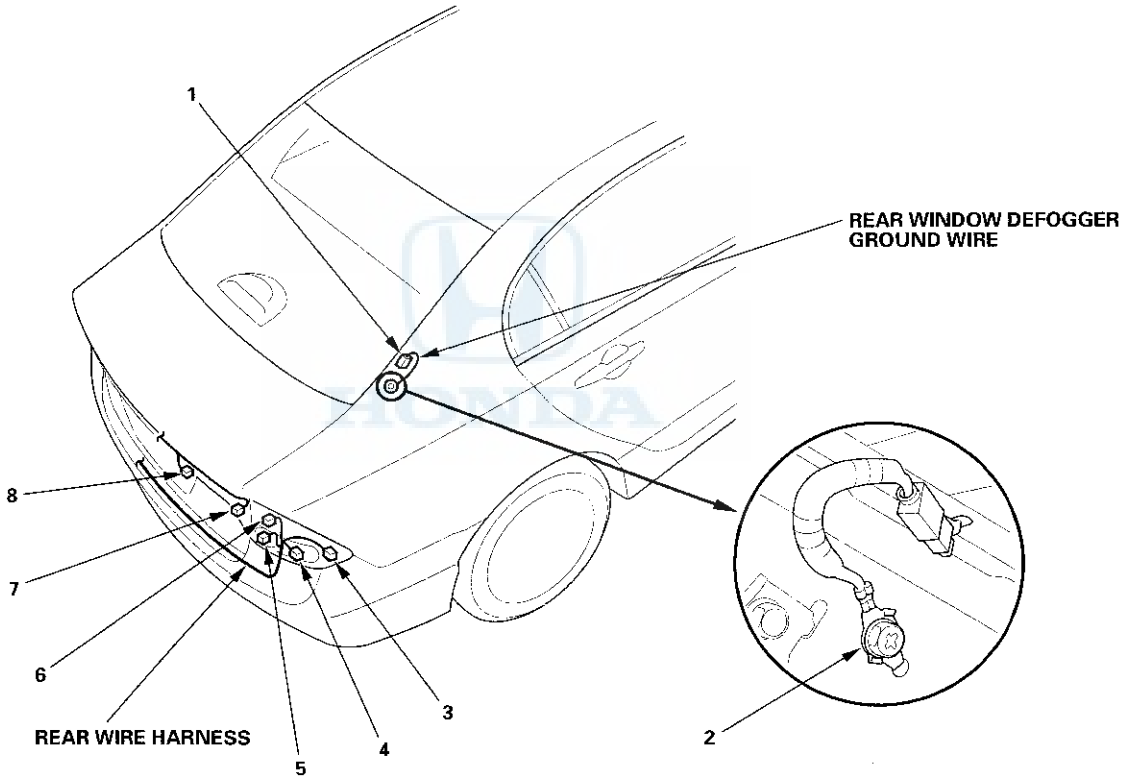

Connector to Harness Index (cont'd)

DC-DC Converter Cable

Connector or Terminal	Ref	Cavities	Location	Connects to	Notes
DC-DC converter terminal (+)	1		DC-DC converter		
DC-DC converter terminal (−)	2		DC-DC converter		
T101	4		Left side of engine compartment	Under-hood fuse/relay box	
G901	3		Under right side of rear shelf	Body ground, via DC-DC converter cable	
G904	5		Under right side of rear shelf	Body ground, via DC-DC converter cable	

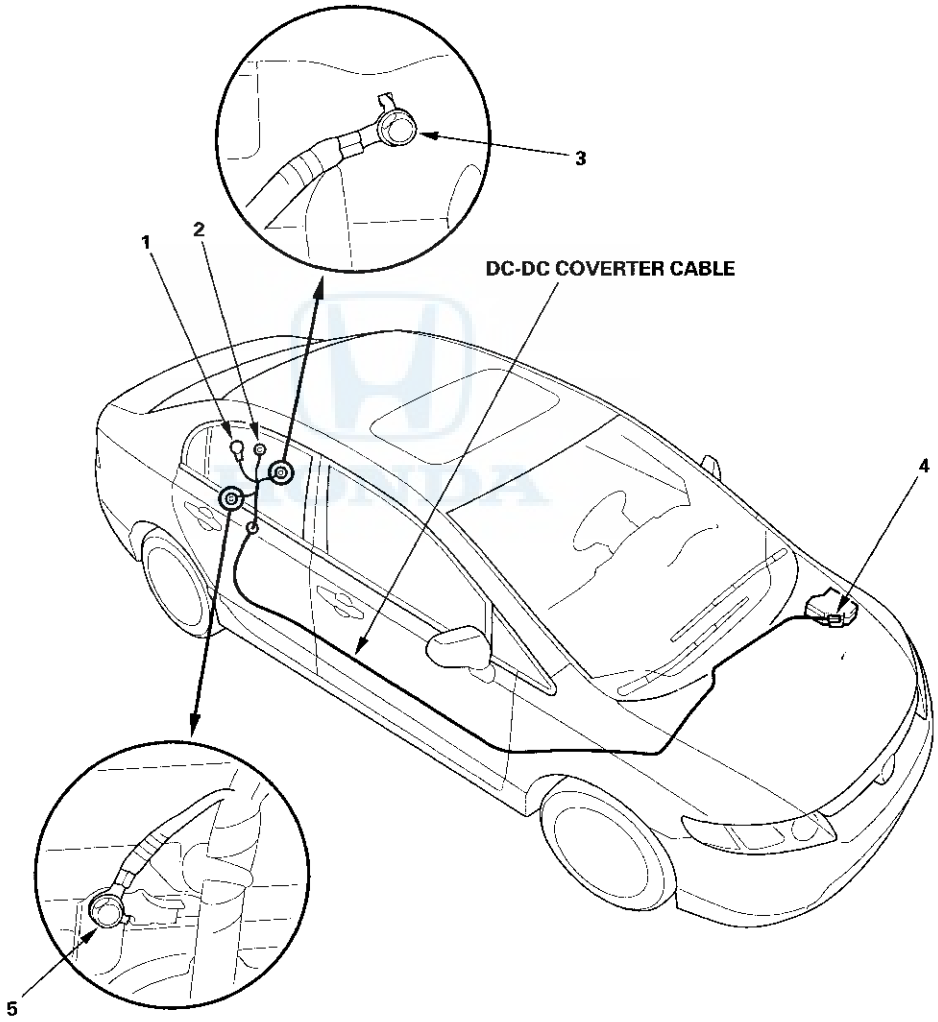

IPU Compartment Wire Harness

Connector or Terminal	Ref	Cavities	Location	Connects to	Notes
A/C compressor driver	4	4	Behind the IPU lid		
BCM module	8	40	Behind the IPU lid		
DC-DC converter	11	4	Behind the IPU lid		
Junction board connector	9	12	Behind the IPU lid		
Motor control module (MCM)	7	20	Behind the IPU lid		
Motor control module (MCM) relay 1	3	4	Behind the IPU lid		
Motor control module (MCM) relay 2	2	4	Behind the IPU lid		
C901	12	20	Behind the rear seat back	Floor wire harness (see page 22-32)	
C902 (Junction connector)	5	20	Behind the rear seat back		* 1
C902 (Junction connector)	5	12	Behind the rear seat back		* 2
C903 (Junction connector)	6	20	Behind the rear seat back		* 1
C903 (Junction connector)	6	12	Behind the rear seat back		* 2
C904	12	4	Behind the IPU lid	IPU module fan subharness	
G902	1		Behind the rear seat	Body ground, via right floor wire harness	
G903	10		Behind the rear seat	Shield ground	

* 1: '06-07 models
* 2: '08-09 models

IPU Module Fan Subharness

Connector or Terminal	Ref	Cavities	Location	Connects to	Notes
IPU module fan	14	4	Behind the IPU lid		
C904	12	4	Behind the IPU lid	IPU compartment wire harness	

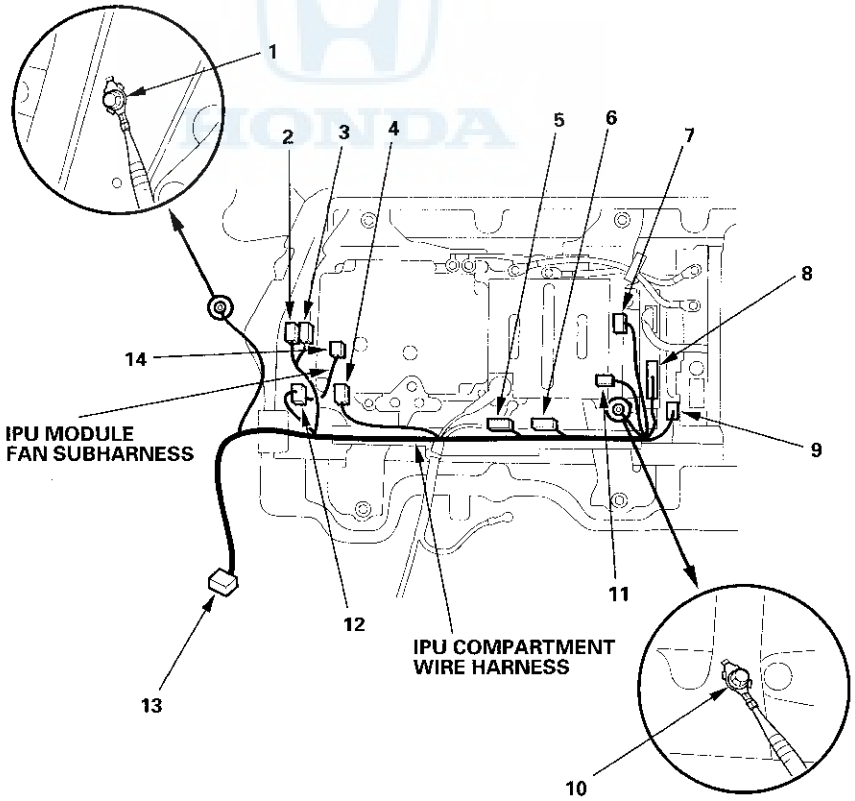

Connector to Harness Index (cont'd)

Roof Wire Harness

Connector or Terminal	Ref	Cavities	Location	Connects to	Notes
Ceiling light	3	3	Rear of roof		
Front individual map light	2	3	Front of roof		
Microphone	1	10	Front of roof		* 1
C801	4	6	Under left side of dash	Dashboard wire harness (see page 22-24)	* 2
C801	4	20	Under left side of dash	Dashboard wire harness (see page 22-24)	* 1

* 1: With navigation system
* 2: Without navigation system

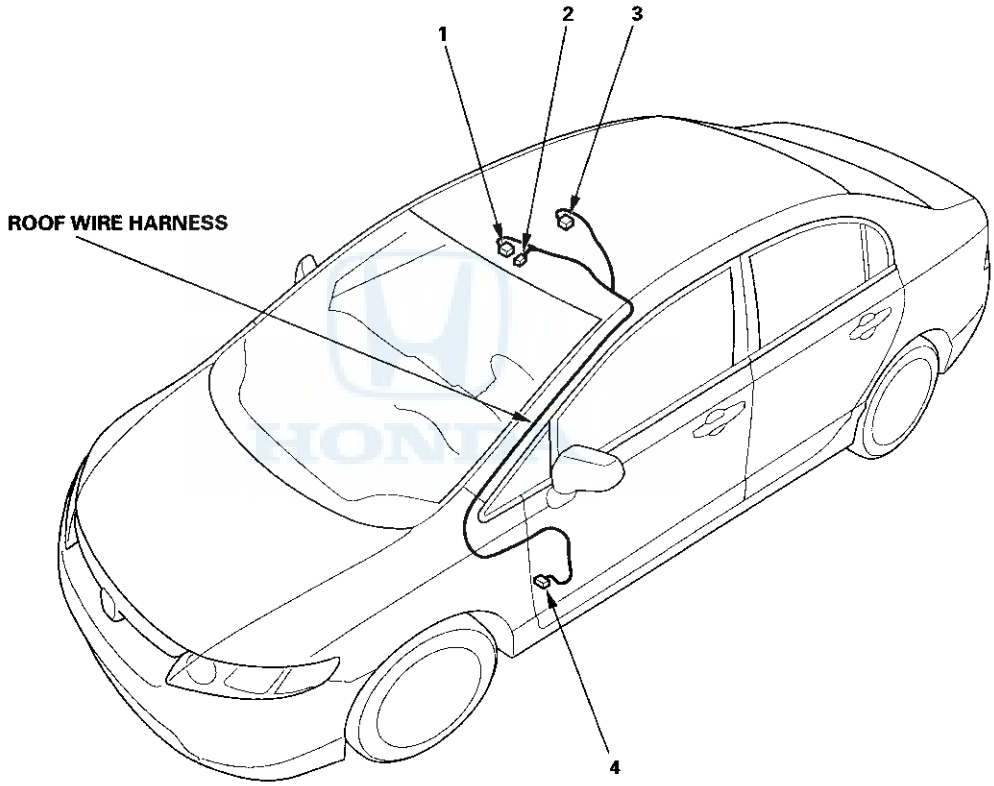

Driver's Door Wire Harness

Connector or Terminal	Ref	Cavities	Location	Connects to	Notes
Driver's door lock actuator/knob switch/key cylinder switch	1	10	Driver's door		
Driver's door speaker	8	2	Driver's door		
Driver's power window motor	9	6	Driver's door		
Left power mirror	4	6	Driver's door		* 1
Left power mirror	4	8	Driver's door		* 2
Power mirror switch	3	13	Driver's door		
Power window master switch	2	22	Driver's door		
C751	6	23	Under left side of dash	Dashboard wire harness (see page 22-24)	
C752	7	18	Under left side of dash	Dashboard wire harness (see page 22-24)	
C753 (Junction connector)	5	12	Driver's door		

* 1: Without mirror defogger
* 2: With mirror defogger

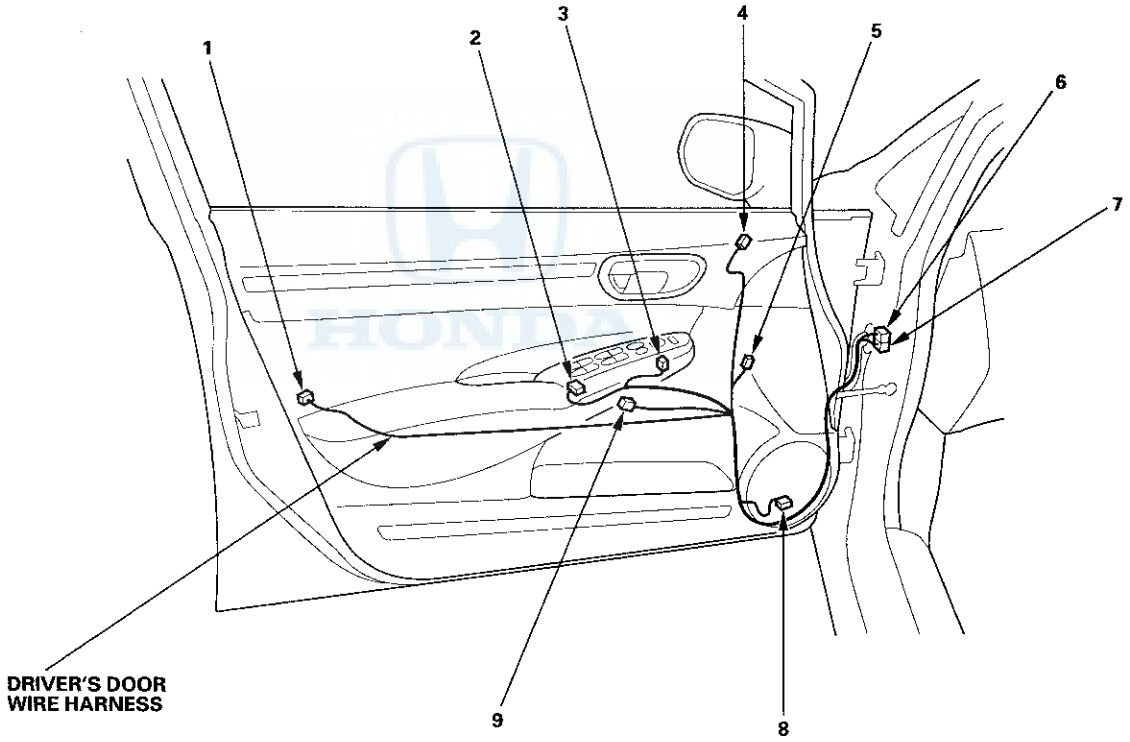

Connector to Harness Index (cont'd)

Front Passenger's Door Wire Harness

Connector or Terminal	Ref	Cavities	Location	Connects to	Notes
Front passenger's door lock actuator/ knob switch	6	10	Front passenger's door		
Front passenger's door speaker	7	2	Front passenger's door		
Front passenger's power window motor	5	2	Front passenger's door		
Front passenger's power window switch	4	8	Front passenger's door		
Right power mirror	3	6	Front passenger's door		* 1
Right power mirror	3	8	Front passenger's door		* 2
C761	1	23	Under right side of dash	Dashboard wire harness (see page 22-28)	
C762	2	18	Under right side of dash	Dashboard wire harness (see page 22-28)	

* 1: Without mirror defogger
* 2: With mirror defogger

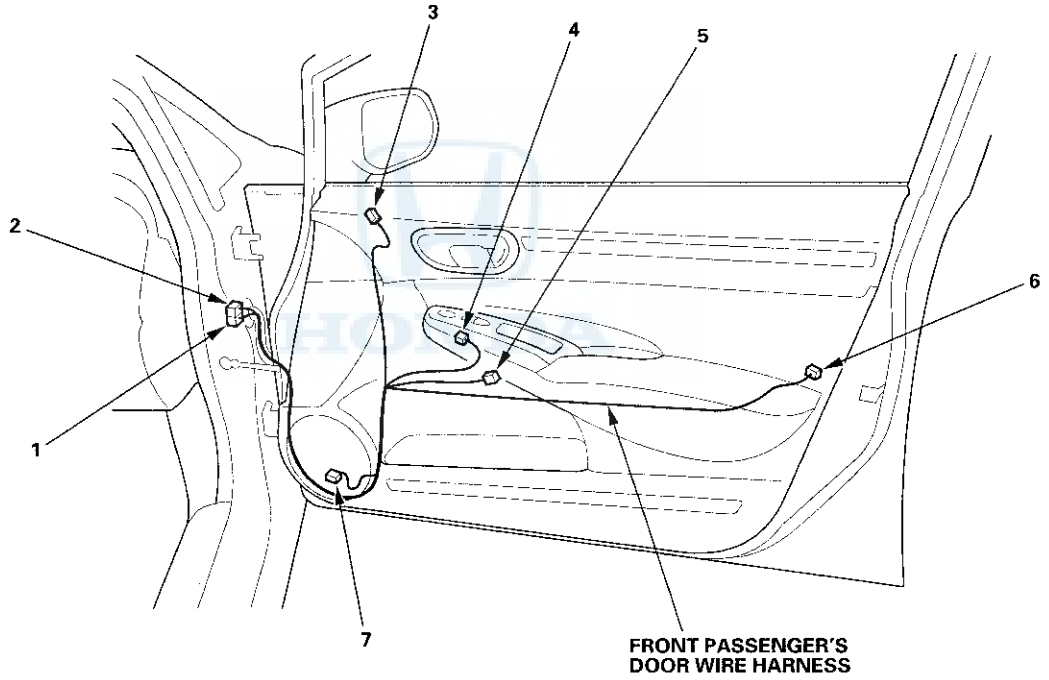

Left Rear Door Wire Harness

Connector or Terminal	Ref	Cavities	Location	Connects to	Notes
Left rear door lock actuator/knob switch	1	10	Left rear door		
Left rear power window motor	4	2	Left rear door		
Left rear power window switch	2	8	Left rear door		
C771	3	18	Left B-pillar	Floor wire harness (see page 22-30)	

LEFT REAR DOOR WIRE HARNESS

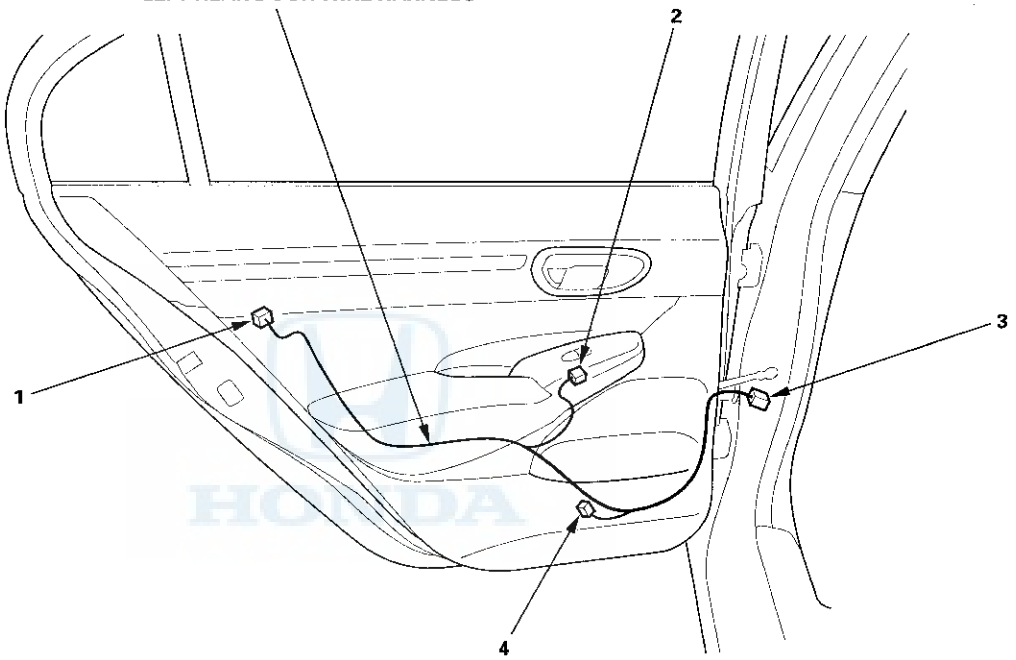

Connector to Harness Index (cont'd)

Right Rear Door Wire Harness

Connector or Terminal	Ref	Cavities	Location	Connects to	Notes
Right rear door lock actuator/knob switch	3	10	Right rear door		
Right rear power window motor	4	2	Right rear door		
Right rear power window switch	2	8	Right rear door		
C781	1	18	Right B-pillar	Floor wire harness (see page 22-32)	

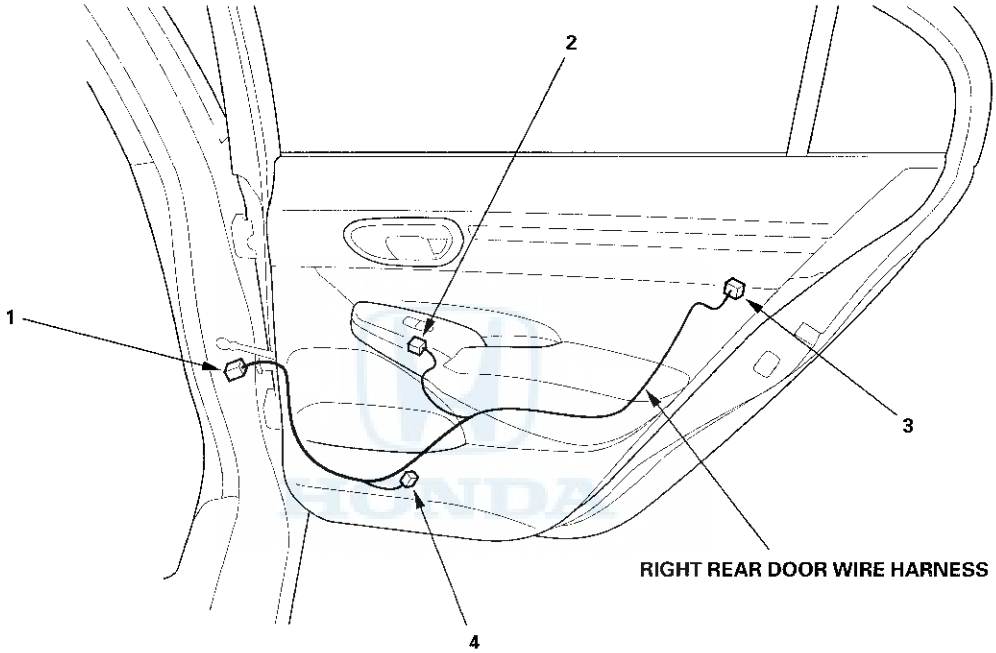

A/C Wire Harness

Connector or Terminal	Ref	Cavities	Location	Connects to	Notes
Air mix control motor	1	7	Under left side of dash		
Blower motor	9	2	Under right side of dash		
Evaporator temperature sensor	5	2	Under middle of dash		
Mode control motor	7	7	Behind glove box		
Power transistor	4	4	Under right side of dash		
Recirculation control motor	8	7	Behind glove box		
Heater core temperature sensor	2	2	Under left side of dash		
C205	3	2	Under left side of dash	Engine compartment wire harness (see page 22-18)	
C505	6	24	Behind left side of glove box	Dashboard wire harness (see page 22-28)	* 1
C505	6	20	Behind left side of glove box	Dashboard wire harness (see page 22-28)	* 2

* 1: '06-07 models
* 2: '08-09 models

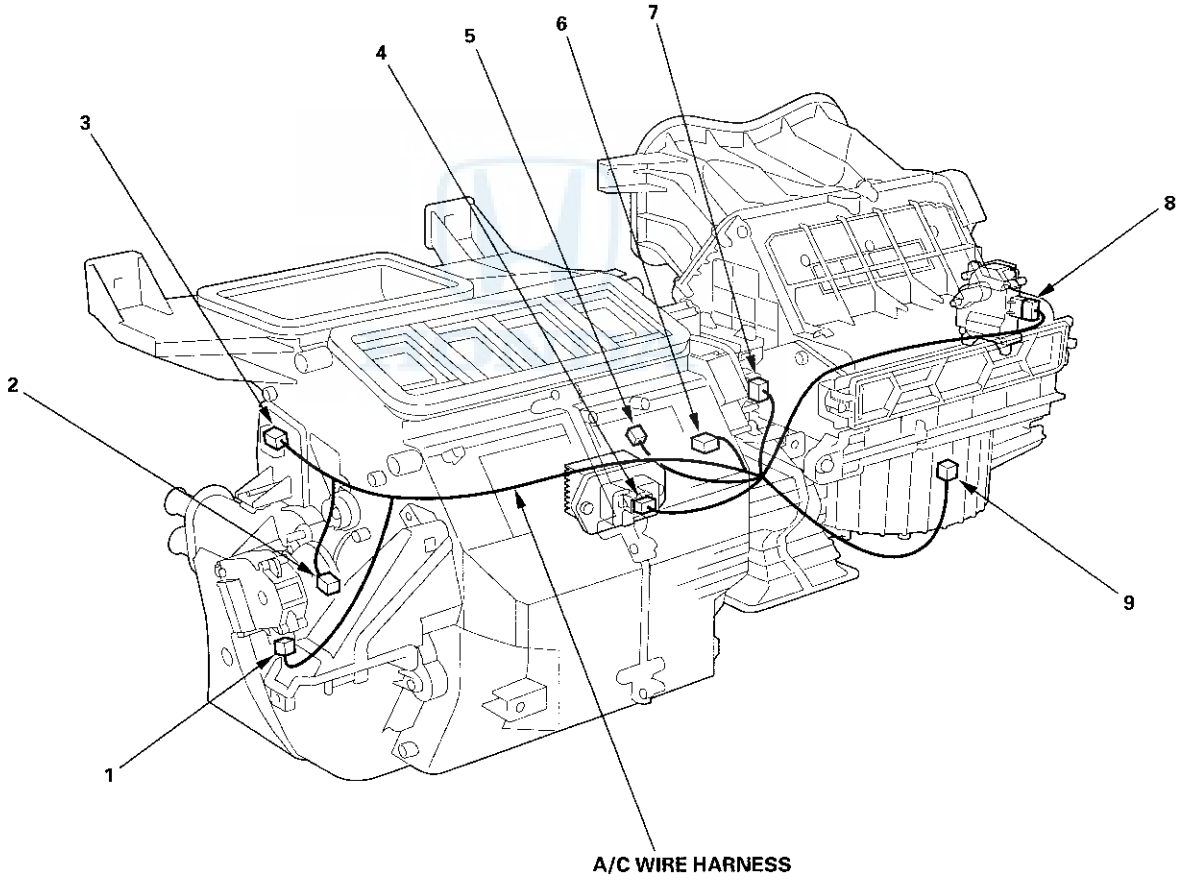

Connector to Harness Index (cont'd)

Console Subharness

Connector or Terminal	Ref	Cavities	Location	Connects to	Notes
Console accessory power socket	5	2	Behind rear console		* 4
Driver's seat heater switch	7	6	Behind rear console		* 5
Front passenger's seat heater switch	4	7	Behind rear console		* 5
HandsFreeLink control unit	5	28	Behind rear console		* 3
C551	1	24	Under middle of dash	Dashboard wire harness (see page 22-26)	* 2
C601	2	2	Under middle of dash	Floor wire harness (see page 22-30)	* 1
C601	2	13	Under middle of dash	Floor wire harness (see page 22-30)	* 2

* 1: '06-08 models
* 2: '09 model
* 3: '09 model with navigation system
* 4: '06-08 models, and '09 model without navigation system
* 5: With seat heater

USB Subharness

Connector or Terminal	Ref	Cavities	Location	Connects to	Notes
USB jack	6	5	Behind rear console		*
C671	3	5	Under middle of dash	USB harness (see page 22-30)	*

*: '09 model

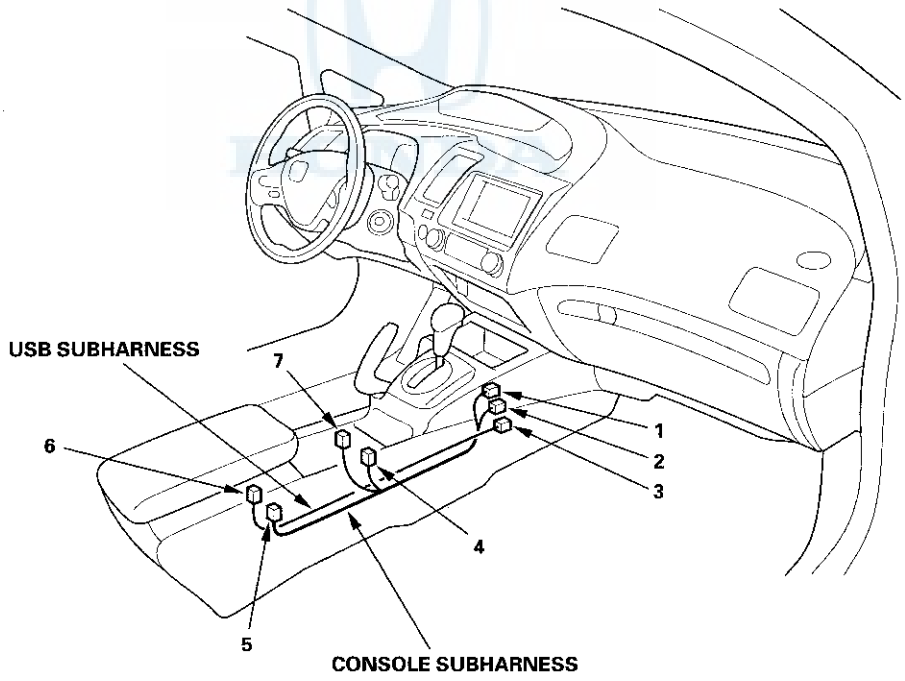

Driver's Seat Position Sensor Harness (Without seat heater)

Connector or Terminal	Ref	Cavities	Location	Connects to	Notes
Driver's seat position sensor C602	1	2	Inside of driver's seat	Floor wire harness (see page 22-30)	
	2	2	Under driver's seat		

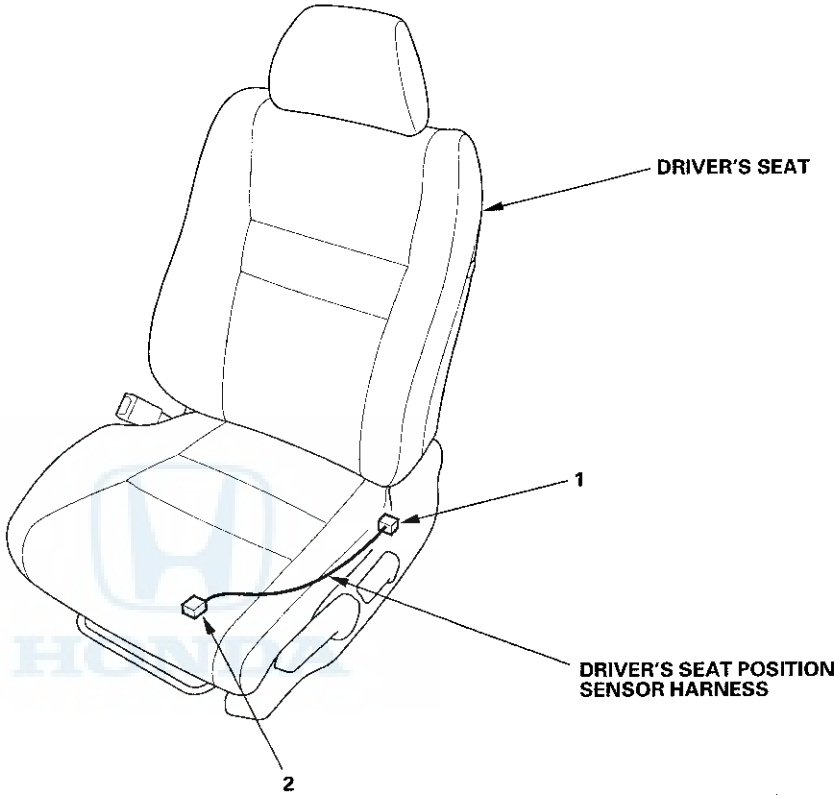

Connector to Harness Index (cont'd)

Driver's Seat Wire Harness (With seat heater)

Connector or Terminal	Ref	Cavities	Location	Connects to	Notes
Driver's seat heater	2	3	Under driver's seat		
Driver's seat heater relay (high)	5	4	Under driver's seat		
Driver's seat heater relay (low)	6	5	Under driver's seat		
C602	3	8	Under driver's seat	Floor wire harness (see page 22-30)	
C604	4	2	Under driver's seat	Driver's seat position sensor harness	

Driver's Seat Position Sensor Harness (With seat heater)

Connector or Terminal	Ref	Cavities	Location	Connects to	Notes
Driver's seat position sensor	1	2	Inside of driver's seat		
C604	4	2	Under driver's seat	Driver's seat wire harness	

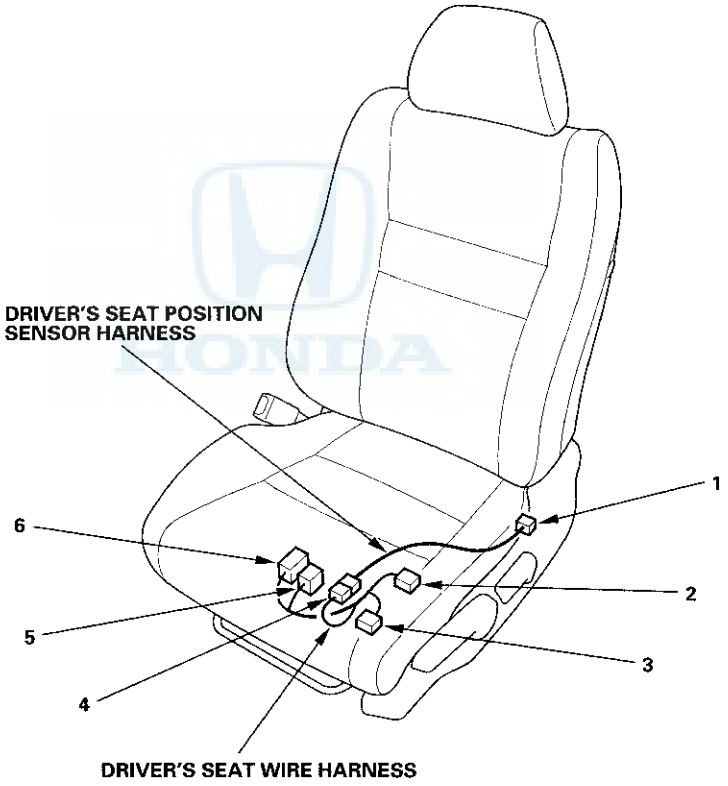

ODS Unit Harness (Without seat heater)

Connector or Terminal	Ref	Cavities	Location	Connects to	Notes
ODS unit	1	18	Left side of front passenger's seat		
Front inner seat weight sensor	3	3	Right side of front passenger's seat		
Front outer seat weight sensor	5	3	Left side of front passenger's seat		
Rear inner seat weight sensor	2	3	Right side of front passenger's seat		
Rear outer seat weight sensor	6	3	Left side of front passenger's seat		
C782	4	4	Under front passenger's seat	Floor wire harness (see page 22-32)	

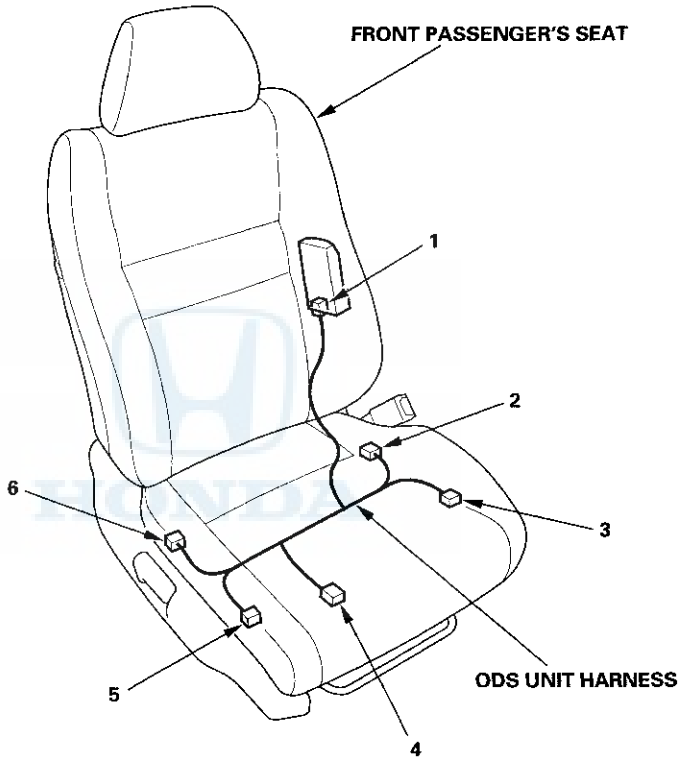

Connector to Harness Index (cont'd)

Front Passenger's Seat Wire Harness (With seat heater)

Connector or Terminal	Ref	Cavities	Location	Connects to	Notes
Front passenger's seat heater	5	3	Under front passenger's seat		
Front passenger's seat heater relay (high)	10	4	Under front passenger's seat		
Front passenger's seat heater relay (low)	9	5	Under front passenger's seat		
C782	6	8	Under front passenger's seat	Floor wire harness (see page 22-32)	
C783	4	4	Under front passenger's seat	ODS unit harness	

ODS Unit Harness (With seat heater)

Connector or Terminal	Ref	Cavities	Location	Connects to	Notes
Front inner seat weight sensor	3	3	Left side of front passenger's seat		
Front outer seat weight sensor	7	3	Right side of front passenger's seat		
ODS unit	1	18	Left side of front passenger's seat-back		
Rear inner seat weight sensor	2	3	Left side of front passenger's seat		
Rear outer seat weight sensor	8	3	Right side of passenger's seat		
C783	4	4	Under front passenger's seat	Front passenger's seat wire harness	

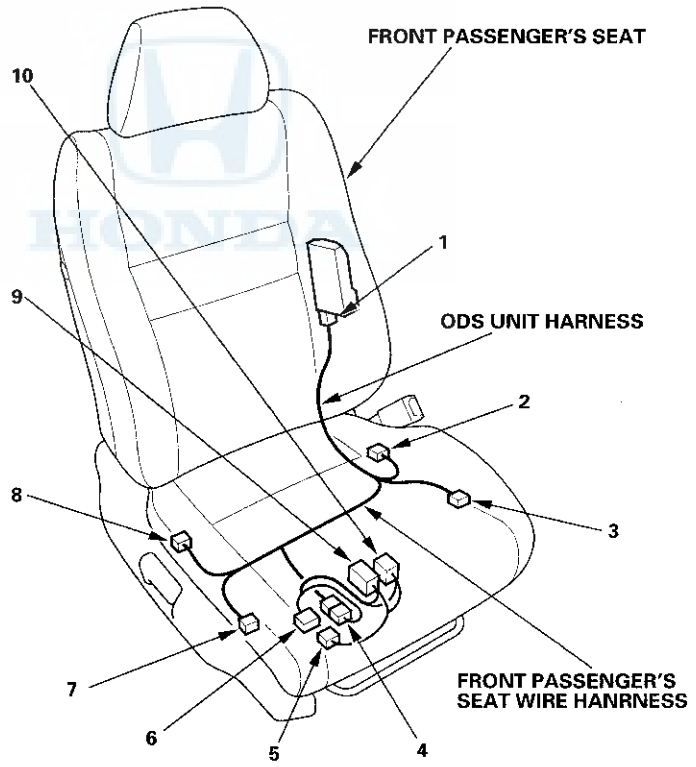

Fuse/Relay Boxes

Connector to Fuse/Relay Box Index

Under-hood Fuse/Relay Box

Socket	Ref	Terminal	Connects to
A (ELD)	21	3	Engine compartment wire harness (see page 22-18)
A/C compressor clutch relay	12	4	
A/C condenser fan relay	3	4	
B	22	1	Engine compartment wire harness (see page 22-18)
Blower motor relay	2	4	
C	23	2	Engine compartment wire harness (see page 22-18)
D	25	8	Engine compartment wire harness (see page 22-18)
Diode (for main fan)	8	——	
Diode (for subfan)	9	——	
E	24	10	Engine compartment wire harness (see page 22-18)
Electronic throttle control system (ETCS) control relay	14	4	
F	17	20	Engine compartment wire harness (see page 22-18)
Fan control relay	4	5	
G	19	1	Engine compartment wire harness (see page 22-18)
H	20	1	Engine compartment wire harness (see page 22-18)
Ignition coil relay	7	4	
J	16	4	Engine compartment wire harness (see page 22-18)
K	18	2	Engine compartment wire harness (see page 22-18)
PGM-FI main relay 1	13	4	
PGM-FI subrelay	6	4	
Power mirror defogger relay	5	5	
Radiator fan relay	15	4	
Rear window defogger relay	1	4	
T3	10		Starter cable
T101	11		DC-DC converter

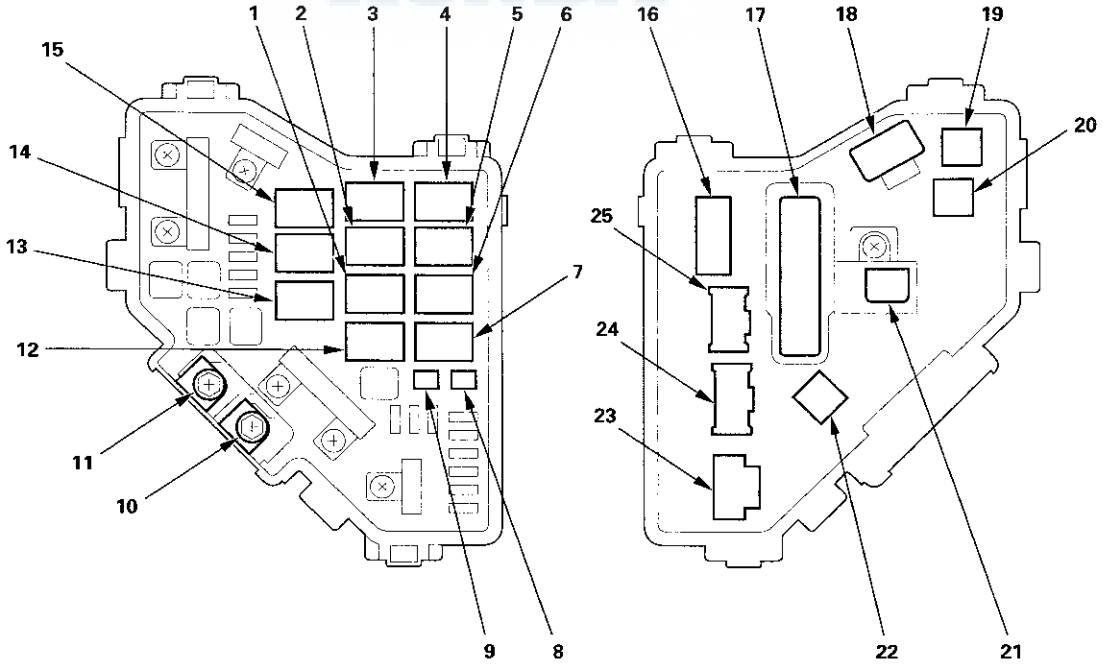

(View of front side) (View of back side)

Connector to Fuse/Relay Box Index (cont'd)

Under-dash Fuse/Relay Box

Socket	Ref	Terminal	Connects to
A (Optional connector)	8	6	Not used
C	9	4	Dashboard wire harness (see page 22-24)
D	3	2	Dashboard wire harness (see page 22-24)
E	4	42	Floor wire harness (see page 22-30)
F	5	34	Engine compartment wire harness (see page 22-18)
G	6	21	Engine compartment wire harness (see page 22-18)
H (MICU service check connector)	7	3	
J	19	4	Dashboard wire harness (see page 22-24)
K	11	8	Dashboard wire harness (see page 22-24)
M	12	10	Dashboard wire harness (see page 22-24)
Memory erase signal connector socket	10	—	
N	13	14	Dashboard wire harness (see page 22-24)
P	18	10	Dashboard wire harness (see page 22-24)
Power window relay	1	4	
Q	16	16	Dashboard wire harness (see page 22-24)
R	14	20	Dashboard wire harness (see page 22-24)
Starter cut relay	2	4	
S	15	20	Dashboard wire harness (see page 22-24)
T	17	34	Dashboard wire harness (see page 22-24)

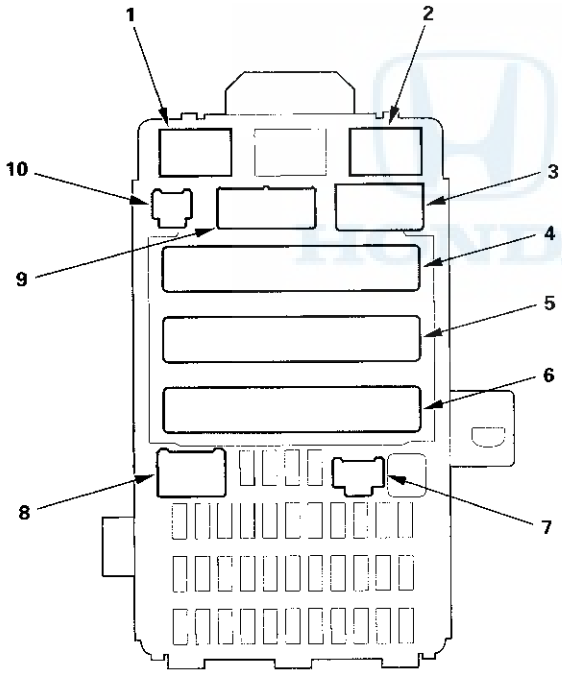

(View of front side)

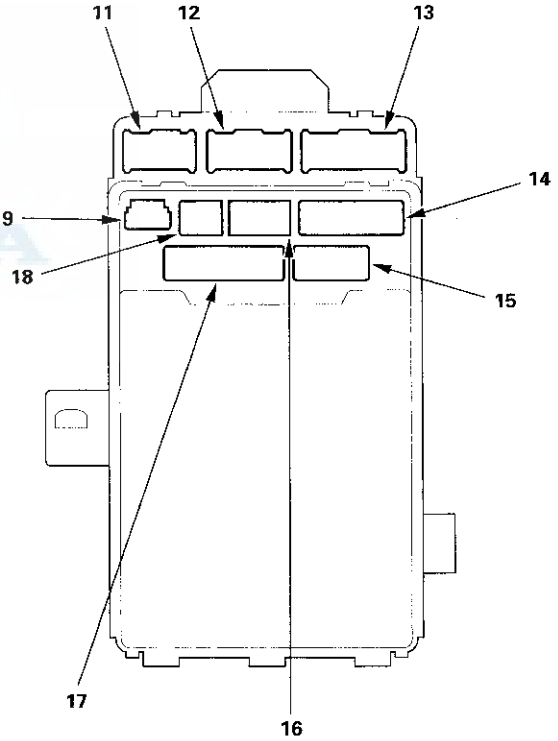

(View of back side)

Auxiliary Under-hood Fuse/Relay Box

Fuse Number	Ref	Terminal	Component(s) or Circuit(s) Protected
Auxiliary electric water pump relay	1	4	Engine compartment wire harness (see page 22-18)
PGM-FI main relay 2	2	4	Engine compartment wire harness (see page 22-18)

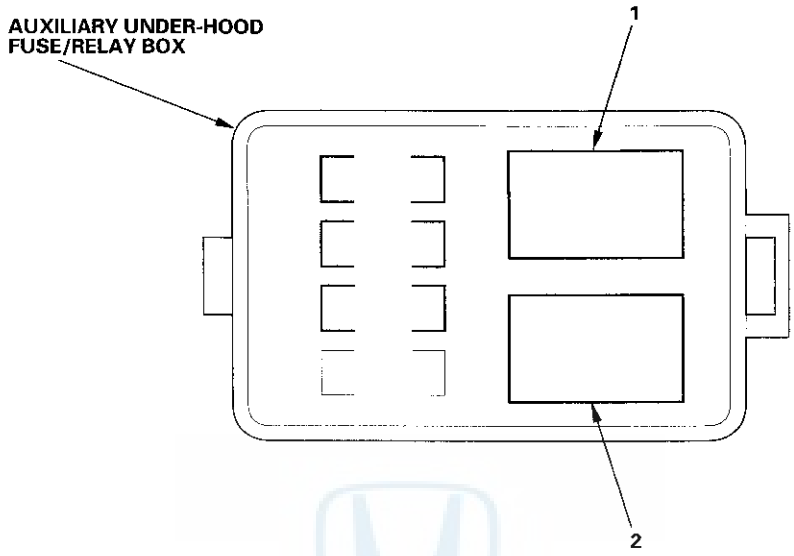

HONDA

Power Distribution

Fuse to Components Index

Under-hood Fuse/Relay Box

Fuse Number	Amps	Component(s) or Circuit(s) Protected
1	100 A (BAT)	Battery, Power distribution
	70 A (EPS)	EPS control unit
2	50 A (IG)	Ignition switch
	80 A *1 60 A *2 (OPTION)	No. 5, No. 6, No. 7, No. 27, No. 28, No. 29, and No. 31 fuses (in the under-dash fuse/relay box)
3	30 A (ABS MTR)	ABS modulator-control unit *3, VSA modulator-control unit *4
	30 A *3 40 A *4 (ABS FSR)	ABS modulator-control unit *3, VSA modulator-control unit *4
4	50 A (H/L)	No. 18, No. 19, No. 20, and No. 21 fuses (in the under-dash fuse/relay box)
	40 A (P/W)	No. 24, No. 25, No. 26, No. 30, No. 32, and No. 33 fuses (in the under-dash fuse/relay box), Power window relay
5	40 A	Servo unit
6	20 A	A/C condenser fan motor (via A/C condenser fan relay)
7	20 A	Radiator fan motor (via radiator fan relay)
8	30 A	Noise condenser (via rear window defogger relay), Rear window defogger (via rear window defogger relay)
9	40 A	Blower motor (via blower motor relay)
10	10 A	Hazard warning light switch, MICU
11	15 A	A/F sensor (Sensor 1) (via PGM-FI main relay 1), EVAP canister vent shut valve (via PGM-FI main relay 1), PGM-FI subrelay, No. 15 fuse (in the Under-hood fuse/relay box)
12	15 A	Brake lights, Horn, MICU, PCM
13	15 A	Exhaust side ignition coils, PCM
14	15 A	Intake side ignition coils, PCM
15	7.5 A	A/C condenser fan relay
16	———	Not used
17	———	Not used
18	20 A	No. 13, No. 14 fuse (in the Under-hood fuse/relay box), Ignition coil relay
19	15 A	CKP sensor, CMP sensor, ETCS relay, Injectors, PCM, PGM-FI main relay 1, PGM-FI main relay 2
20	7.5 A	A/C compressor clutch (via A/C compressor clutch relay)
21	15 A	PCM (via ETCS relay)
22	7.5 A	Auxiliary electric water pump (via Auxiliary electric water pump relay), Ceiling light, Climate control unit (via Auxiliary electric water pump relay), Front individual map lights, Trunk light
23	10 A	Audio unit *5, BCM module, Data link connector (DLC), Gauge control module (speedo), Gauge control module (tach), HandsFreeLink control unit, Immobilizer-keyless control unit, MICU, Motor control module (MCM), Navigation unit *6

* 1: '06-07 models
* 2: '08-09 models
* 3: Without VSA
* 4: With VSA
* 5: Without navigation system
* 6: With navigation system

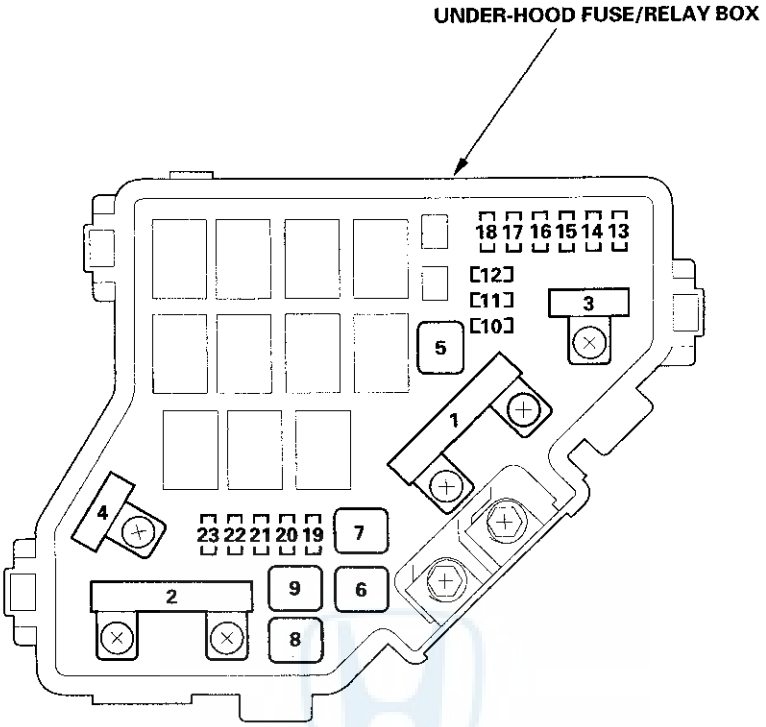
UNDER-HOOD FUSE/RELAY BOX
18 17 16 15 14 13
[12]
[11]
[10]
3
5
1
4
23 22 21 20 19
7
2
9
6
8

(cont'd)

Fuse to Components Index (cont'd)

Under-dash Fuse/Relay Box

Fuse Number	Amps	Component(s) or Circuit(s) Protected
1	7.5 A	Power mirror switch light
2	15 A	PCM, Fuel pump (via PGM-FI main relay 2), Immobilizer-keyless control unit
3	10 A	DC-DC converter, ELD, EVAP canister purge valve, MAF sensor, PCM (via brake pedal position switch), Secondary HO2S (sensor 2)
4	7.5 A	ABS modulator-control unit*6, EPS control unit, Servo unit, VSA modulator-control unit*7, Yaw rate-lateral acceleration sensor*7
5	15 A	Driver's seat heater (via seat heater relay)*3, Front passenger's seat heater (via seat heater relay)*3
6	20 A	Not used
7	7.5 A	TPMS control unit*8
8	———	Not used
9	7.5 A	ODS unit, Passenger's airbag cutoff indicator, SRS unit
10	7.5 A	BCM module, Gauge control module (speedo), Gauge control module (tach), MICU, Optional connector (Interface box)*1, Shift lock solenoid, TPMS control unit*8
11	10 A	SRS unit
12	10 A	Right headlight (High beam)
13	10 A	Left headlight (High beam)
14	7.5 A	A/T gear position indicator panel light, Audio remote switch light, Audio unit light*5, Climate control unit, Cruise control combination switch light, Dash lights brightness controller light, Driver's seat heater switch light*3, Hazard warning switch light, HFL-voice control switch light*9, Navigation unit*4, Optional connector (Interface box)*1, Passenger's airbag cutoff indicator light, Passenger's seat heater switch light*3, VSA OFF switch light*7
15	7.5 A	Front side maker/parking lights, Inner taillights, License plate lights, Rear side marker lights, Taillights
16	10 A	Right headlight (Low beam)
17	10 A	Left headlight (Low beam)
18	20 A	MICU (+B H/L HI)
19	15 A	MICU (+B SMALL LT)
20	———	Not used
21	20 A	MICU (+B H/L LO)
22	7.5 A	A/C compressor driver
23	7.5 A	PCM (Starter switch signal)
24	20 A	Not used
25	20 A	MICU (+B DR LOCK)
26	20 A	Power window master switch
27	———	Not used
28	15 A	Console accessory power socket (via console accessory power socket relay)
29	15 A	Front accessory power socket (via front accessory power socket relay)
30	20 A	Front passenger's power window motor
31	———	Not used
32	20 A	Right rear power window motor
33	20 A	Left rear power window motor
34	———	Not used
35	7.5 A	Audio unit*5, Console accessory power socket relay, Front accessory power socket relay, HandsFreeLink control unit*9, Ignition key switch, MICU, Navigation unit*4, Optional connector (Interface box)
36	10 A	AHB buzzer, Auxiliary electric water pump relay, Climate control unit, Power mirrors (via power mirror switch), Servo unit, Under-hood fuse/relay box (A/C compressor clutch relay, Blower motor relay, Cooling fan control relay, Power mirror defogger relay*2, Radiator fan relay, Rear window defogger relay)
37	7.5 A	MICU (Daytime running lights power supply)
38	30 A	MICU (IG1 WIPER)

* 1: '06 USA CARLINK
* 2: With mirror defogger
* 3: With seat heater
* 4: With navigation system
* 5: Without navigation system
* 6: Without VSA
* 7: With VSA
* 8: '08-09 USA models
* 9: '09 model with navigation system

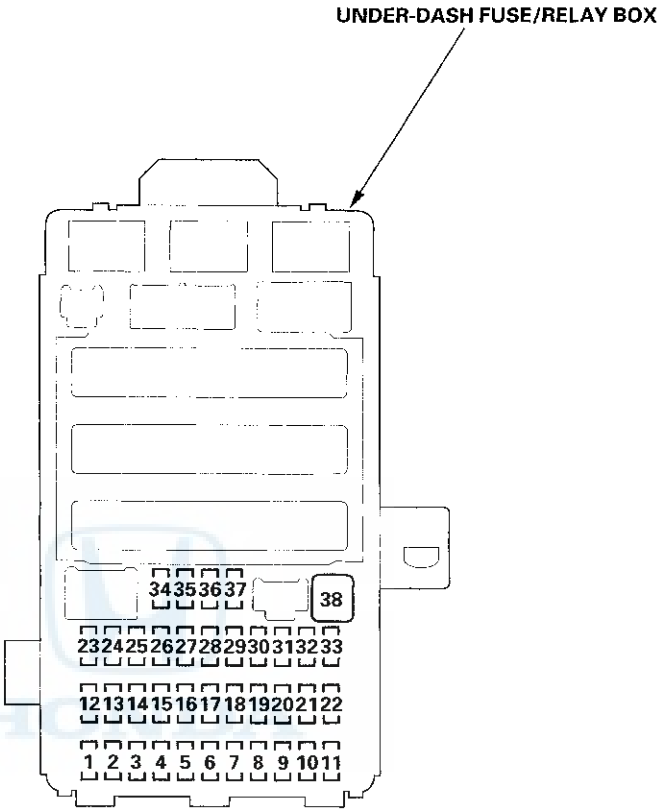
UNDER-DASH FUSE/RELAY BOX
34 35 36 37
38
23 24 25 26 27 28 29 30 31 32 33
12 13 14 15 16 17 18 19 20 21 22
1 2 3 4 5 6 7 8 9 10 11

(cont'd)

Fuse to Components Index (cont'd)

Auxiliary Under-hood Fuse/Relay box

Fuse Number	Amps	Component(s) or Circuit(s) Protected
61	10 A	IPU modulator fan (via MCM relay 2), MCM (via MCM relay 2), Servo unit
62	7.5 A	BCM module (via MCM relay 1), MCM relay 1, MCM relay 2
63	15 A	Servo unit

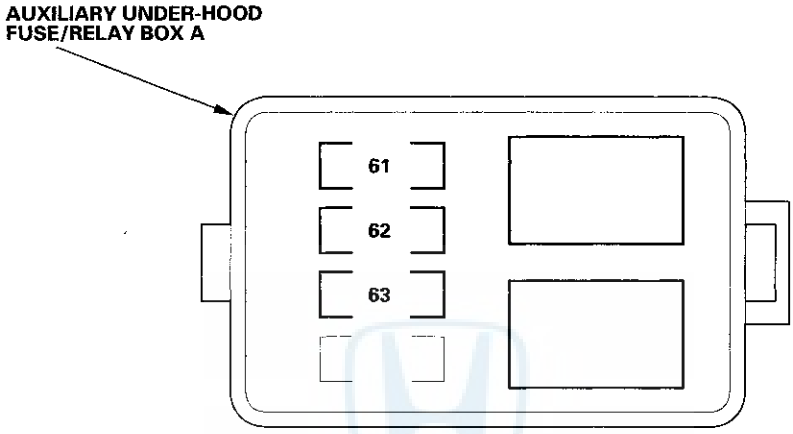

HONDA

Ground Distribution

Ground to Components Index

Ground	Component or circuit grounded
G1	Battery
G2	Engine
G3	Transmission housing
G101	PCM (CVTPG 1) (2 wire)
G102	BCM module (2 wire)*2, CKP sensor, CMP sensor, EGR valve and position sensor, Exhaust side ignition coils, Intake side ignition coils, Motor control module (MCM) (LG) (2 wire)*2, PCM (LG 1), PCM (LG 2), PCM (PG 1), PCM (PG 2), Rocker arm oil control solenoid (1 and 2), Rocker arm oil pressure switch, Transmission range switch
	Shielding between the PCM and the Knock sensor (KS) Shielding between the PCM and the Secondary HO2S (Sensor 2) Shielding between the motor control module (MCM) and the motor position sensor
G201	Right front side marker/parking light, Right front turn signal light, Right headlight (high beam), Right headlight (low beam), Windshield washer motor, Windshield wiper motor
G202	ABS modulator-control unit (2 wire)*4, Power unit, Servo unit (3 wire), VSA modulator-control unit (2 wire)*5
G301	A/C condenser fan motor, Auxiliary electric water pump, Blower motor relay, ELD, Fan control relay, Left front side marker/parking light, Left headlight (high beam), Left headlight (low beam), Left front turn signal light
G401	Brake fluid level switch, Hood switch, MICU (PG), Power transistor, Washer fluid level switch (Canada models) (G401 connects to G601 via under-dash fuse/relay box)
G402	EPS control unit
G403	Torque sensor
G501	Dash lights brightness controller and odometer select/reset switch, Driver's door key cylinder switch, Driver's door lock knob switch, HandsFreeLink control unit*9, MICU (SG), Navigation unit, VSA OFF switch*5
G502	Data link connector (DLC), Front accessory power socket, Right power mirror defogger*6, Right side turn signal light
G503	Console accessory power socket relay, Front accessory power socket relay, Gauge control module (tach), Left power mirror defogger*6, Left side turn signal light, Power mirror switch (2 wire), Power window master switch (2 wire)
G504	Cable reel (steering wheel switches ground), Climate control unit, Front passenger's door lock knob switch, Front passenger's door lock switch, Gauge control module (speedo), Gauge control module (tach), I/F box*1, Ignition key switch, Navigation unit*8, TPMS control unit*3
G505	Audio unit*7, Navigation unit*8
G506	Memory erase signal (MES) connector, SRS unit (2 wire)

* 1: '06 USA CARLINK
* 2: '06-07 models
* 3: '08-09 USA models
* 4: Without VSA
* 5: With VSA
* 6: With mirror defogger
* 7: Without navigation system
* 8: With navigation system
* 9: '09 model with navigation system

(cont'd)

Ground to Components Index (cont'd)

Ground	Component or circuit grounded
G601	A/T gear position indicator light/Park-pin switch, Console accessory power socket, Driver's seat heater*6, Driver's seat heater relays*6, Driver's seat heater switch*6, Fuel pump, MICU (PG), Passenger's seat heater*6, Passenger's seat heater relays*6, Passenger's seat heater switch*6 (G601 connects to G401 via under-dash fuse/relay box)
G602	Driver's seat belt buckle switch, Front passenger's seat belt buckle switch, Left rear door lock knob switch, MICU (SG), ODS unit, Right rear door lock knob switch, Yaw rate-lateral acceleration sensor*5
G603	Noise condenser (for rear window defogger)
G701	High mount brake light, Left back-up light, Left inner taillight, Left license plate light, Left rear side marker light, Left taillight, Left rear turn signal light, Right back-up light, Right inner taillight, Right license plate light, Right rear side marker light, Right taillight, Right rear turn signal light, Trunk key cylinder switch*3, Trunk lid latch switch*2, Trunk lid release actuator/trunk lid latch switch*4
G801	Rear window defogger (—)
G901	DC-DC converter
G902	A/C compressor driver, BCM module (2 wire)*1, Intelligent power unit (IPU) module fan
G903	Shielding between the motor control module (MCM) and the motor position sensor
G904	Shielding between the DC converter and the under-hood fuse/relay box Shielding between the DC converter and the G901

* 1: '06-07 models
* 2: '06-07 Canada models
* 3: '06-08 models
* 4: '06-08 USA models and '09 model
* 5: With VSA
* 6: With seat heater

HONDA

Under-hood Fuse/Relay Box

Removal and Installation

Special Tools Required
Relay puller 07AAC-000A1A0

Removal

1. Do the battery terminal disconnection procedure (see page 22-62).

2. Remove the starter cable (A) and the DC-DC converter cable (B) from the under-hood fuse/relay box.

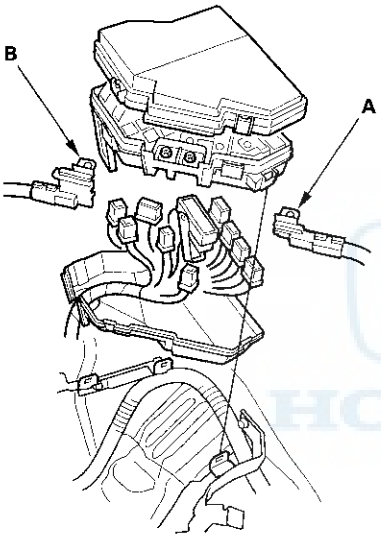

3. Remove the bottom cover from the under-hood fuse/relay box.

4. Disconnect the connectors from the under-hood fuse/relay box.

5. Carefully remove the relays using the relay puller.

   NOTE: Do not use pliers. Pliers will damage the relays, which could cause the engine to stall or not start.

Installation

1. Install the relays and connect the connectors to the under-hood fuse/relay box, then install the under-hood fuse/relay box in the reverse order of removal.

2. Install the removed parts in the reverse order of removal.

3. Do the battery terminal reconnection procedure (see page 22-62).

4. Confirm that all systems work properly.

Under-dash Fuse/Relay Box

Removal and Installation

Special Tools Required
Relay puller 07AAC-000A1A0

SRS components are located in this area. Review the SRS component locations (see page 24-11) and precautions and procedures (see page 24-13) before doing repairs or servicing.

Removal

1. Do the battery terminal disconnection procedure (see page 22-62).

2. Remove the driver's dashboard lower cover (see page 20-89).

3. Disconnect the connectors from the fuse side of the under-dash fuse/relay box (A).

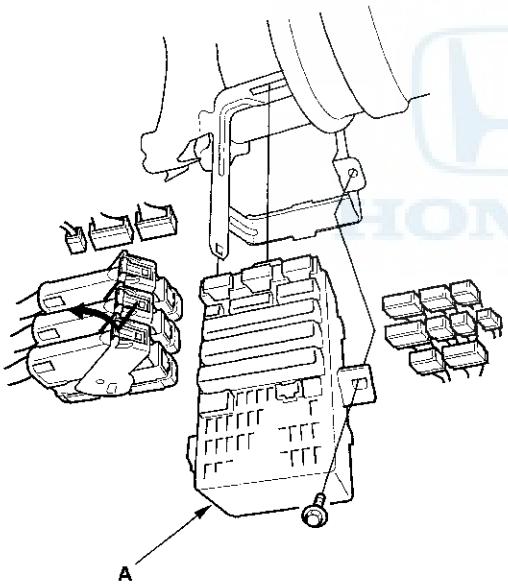

4. Remove the mounting bolt, and pull the fuse/relay box away from the body.

5. Disconnect the connectors from the back side of the under-dash fuse/relay box, then remove the under-dash fuse/relay box.

6. Carefully remove the relays using the relay puller.

   NOTE: Do not use pliers. Pliers will damage the relays, which could cause the engine to stall or not start.

Installation

1. Install the relays and connect the connectors to the under-dash fuse/relay box, then install the under-dash fuse/relay box in the reverse order of removal.

2. Install the removed parts in the reverse order of removal.

3. Do the battery terminal reconnection procedure (see page 22-62).

4. Register the immobilizer system with the HDS (see page 22-301).

   NOTE: The imoes unit is built into the MICU which is part of the under-dash fuse/relay box. Because of this construction, the imoes must be registered, or the vehicle will not start.

5. Confirm that all systems work properly.

12 Volt Battery Test

⚠WARNING

A battery can explode if you do not follow the proper procedure, causing serious injury to anyone nearby. Follow all procedures carefully and keep sparks and open flames away from the battery.

Required Test Equipment
Honda Electrical System Analyzer (ED-18 Battery tester): T/N INBED18LLH

Ordering Information
To order an Electrical System Analyzer, go to the Honda Tool and Equipment catalog on the iN, or call 888-424-6857.

Software Version
Make sure you have the latest software in the ED-18. To check the version on the do this:

- Press the POWER button.
- Select Reports, then press ENTER.
- Select i Version, then press ENTER.

If you do not have the correct version, Tools Hotline at 800-346-6327.

Using the ED-18 Battery Tester

NOTE: For set up, customization, and other available features, refer to the ED-18 user's manual.

1. Connect the leads to the positive and negative terminal of the battery.

2. Use the arrow keys to select the battery test, then press enter, then follow the prompts.

   NOTE: Make sure to enter the correct cold cranking ampere rating of the battery. If the number is not entered correctly, the result will not be accurate.

3. Here are the five possible battery conditions:

   - Good Battery: The battery has at least 60 percent of its charge and requires no action.
   - Good-Recharge: The battery condition appears to be good, but charging is recommended and then retest. See your battery charger's instructions to fully charge the battery, then recheck. Do not charge the battery using the vehicle's alternator.
   - Charge and Retest: The battery condition is not known because its charge is too low. Recharge the battery, then retest. See your battery's instructions to fully charge the battery, then recheck. Do not charge the battery using the vehicle's alternator.
   - Replace Battery: The battery condition is poor. Replace it.
   - Bad Cell: There is a problem with the battery. Replace it.

Battery Terminal Disconnection and Reconnection

Disconnection

Some systems store data in memory that is lost when the battery is disconnected. Do the following steps before disconnecting the battery.

1. Make sure you have the anti-theft code(s) for the audio and/or the navigation system (if equipped).
2. If you are replacing the audio unit, write down the audio presets (AM and FM), and the XM audio presets (if equipped), because the audio unit does not retain the presets after the battery is disconnected.
3. Make sure the ignition switch is in LOCK (0).
4. Disconnect and isolate the negative cable from the battery.

   NOTE: Always disconnect the negative cable from the battery first.
5. Disconnect the positive cable from the battery.

Reconnection

Some systems store data in memory that is lost when the battery is disconnected. Do the following steps to restore the systems back to normal operation.

1. Clean the battery terminals.
2. Test the battery (see page 22-61).
3. Reconnect the positive cable (A) to the battery (B) first, then reconnect the negative cable (C) to the battery.

   NOTE: Always connect the positive cable to the battery first.

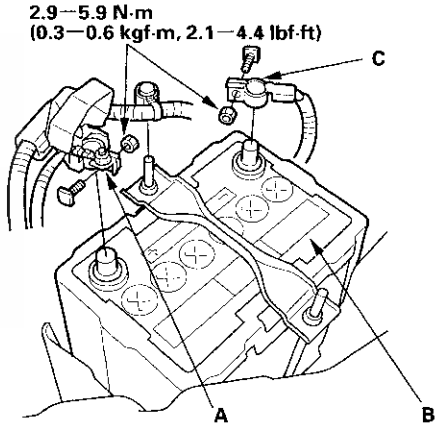

4. Apply multipurpose grease to the terminals to prevent corrosion.
5. Do the start clutch pressure control calibration procedure (see page 14-172).
6. If the IMA battery level gauge (BAT) displays no segments, start the engine, and hold it between 3,500 rpm and 4,000 rpm without load (in P or N) until the BAT displays at least three segments.
7. Enter the anti-theft code(s) for the audio system and/or the navigation system (if equipped).
8. Enter the audio presets (if applicable), and enter the XM audio presets (if equipped).
9. Set the clock (for vehicles without navigation).

Battery Removal and Installation

The battery terminal disconnection/reconnection procedure (see page 22-62) must be done before and after doing this procedure. Some systems store data in memory that is lost when the battery is disconnected.

Removal

1. Do the battery terminal disconnection procedure (see page 22-62).

2. Remove the two nuts (A) securing the battery setting plate, then remove the battery setting plate (B) and the battery (C).

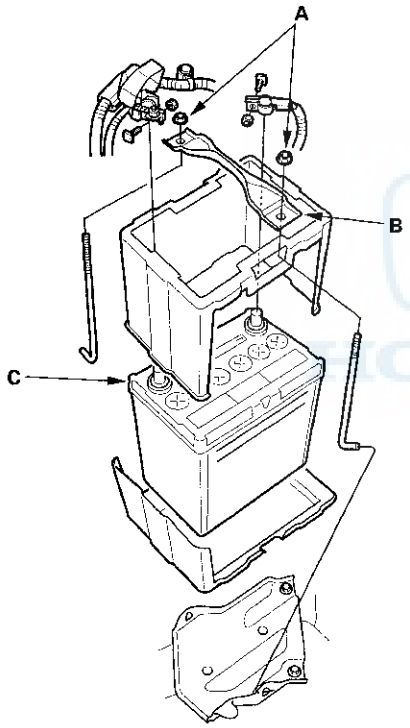

Installation

1. Install the battery (A), then install the battery setting plate (B).

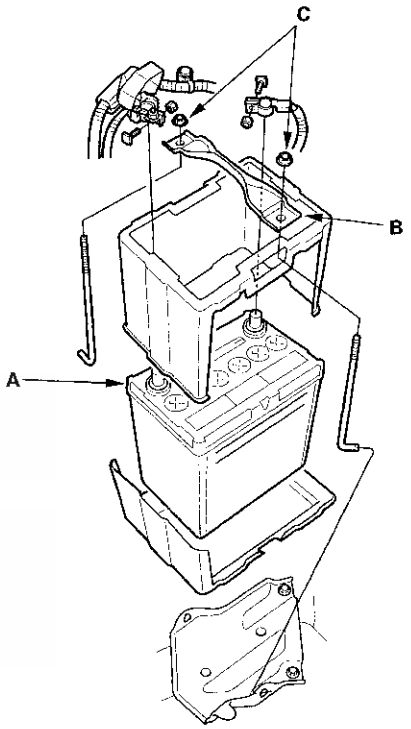

2. Tighten the two nuts (C) equally until the battery is stable.

   NOTE: Do not deform the battery setting plate by over-tightening the nuts.

3. Do the battery terminal reconnection procedure (see page 22-62).

   NOTE: Make sure the positive terminal and the negative terminal are not reverse-connected.

Power Relay Test

Special Tools Required
Relay puller 07AAC-000A1A0

Use this chart to identify the type of relay, then do the test listed for it. Carefully remove the relays using the relay puller. Do not use pliers. Pliers will damage the relay.

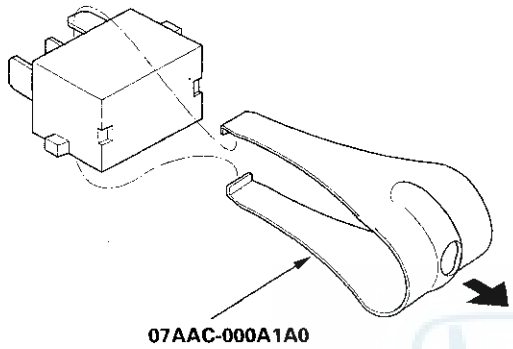

Relay	Test
A/C compressor clutch relay	Normally-open type
A/C condenser fan relay	
Auxiliary electric water pump relay	
Blower motor relay	
Console accessory power socket relay	
ELECTRONIC THROTTLE CONTROL SYSTEM (ETCS) CONTROL RELAY	
Front accessory power socket relay	
Ignition coil relay	
Motor control module (MCM) relay 1	
Motor control module (MCM) relay 2	
PGM-FI main relay 1	
PGM-FI main relay 2	
PGM-FI subrelay	
Power window relay	
Radiator fan relay	
Rear window defogger relay	
Seat heater relay (HIGH)	
Starter cut relay	
Fan control relay	Five-terminal type
Power mirror defogger relay	
Seat heater relay (LOW)	

Normally-open type

Check for continuity between the terminals.

- There should be continuity between terminals No. 1 and No. 2 when the battery positive terminal is connected to terminal No. 4, and the battery negative terminal is connected to terminal No. 3.
- There should be no continuity between terminals No. 1 and No. 2 when power is disconnected.

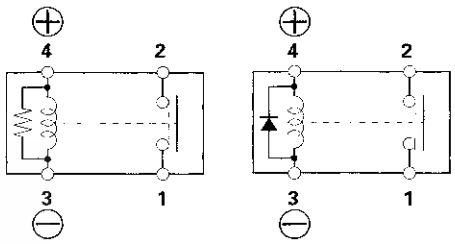

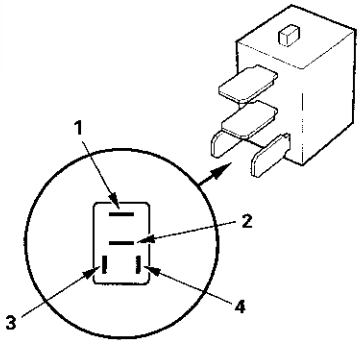

Five-terminal type

Check for continuity between the terminals.

- There should be continuity between terminals No. 1 and No. 2 when the battery positive terminal is connected to terminal No. 5, and the battery negative terminal is connected to terminal No. 3.
- There should be continuity between terminals No. 1 and No. 4 when power is disconnected.

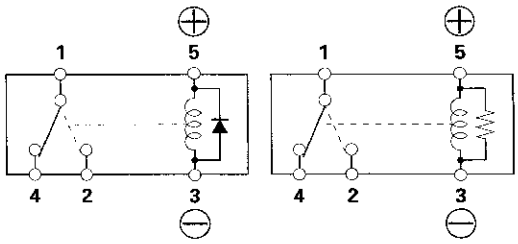

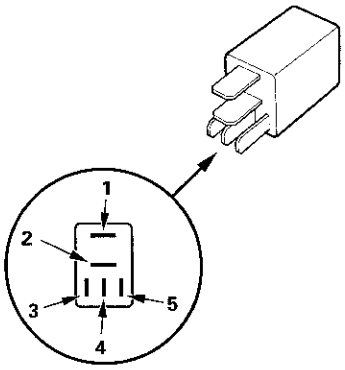

Ignition Switch

Test

SRS components are located in the area. Review the SRS component locations (see page 24-11), and precautions and procedures (see page 24-13) before doing repairs or servicing.

1. Do the battery terminal disconnection procedure (see page 22-62).

2. Remove the driver's dashboard lower cover (see page 20-89), and the steering column covers (see page 17-10).

3. Disconnect the 7P connector (A) from the ignition switch (B).

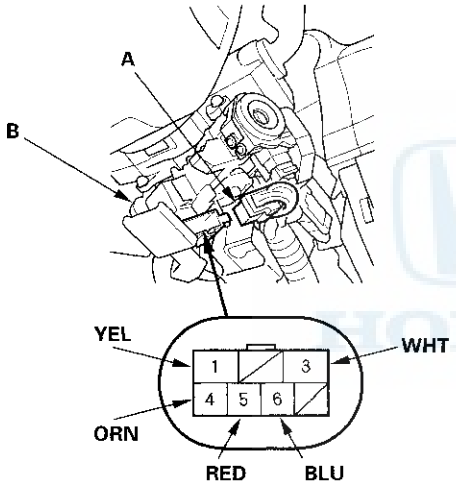

4. Check for continuity between the terminals in each switch position according to the table.

Position \ Terminal	RED (ACC)	WHT (BAT)	BLU (IG1)	ORN (IG2)	YEL (ST)
0 (LOCK)					
I (ACC)	○	○			
II (ON)	○	○	○	○	
III (START)		○	○		○

5. If the continuity is not as specified, replace the ignition switch (see page 22-66).

6. Do the battery terminal reconnection procedure (see page 22-62).

Replacement

SRS components are located in the area. Review the SRS component locations (see page 24-11), and precautions and procedures (see page 24-13) before doing repairs or servicing.

1. Do the battery terminal disconnection procedure (see page 22-62).

2. Remove the driver's dashboard lower cover (see page 20-89), and the steering column covers (see page 17-10).

3. Disconnect the 7P connector (A) from the ignition switch (B).

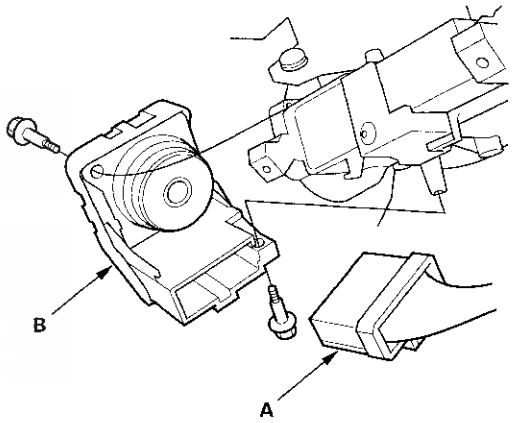

4. Remove the two screws and the ignition switch.

5. Install the parts in the reverse order of removal.

6. Do the battery terminal reconnection procedure (see page 22-62).

Multiplex Integrated Control System

Component Location Index

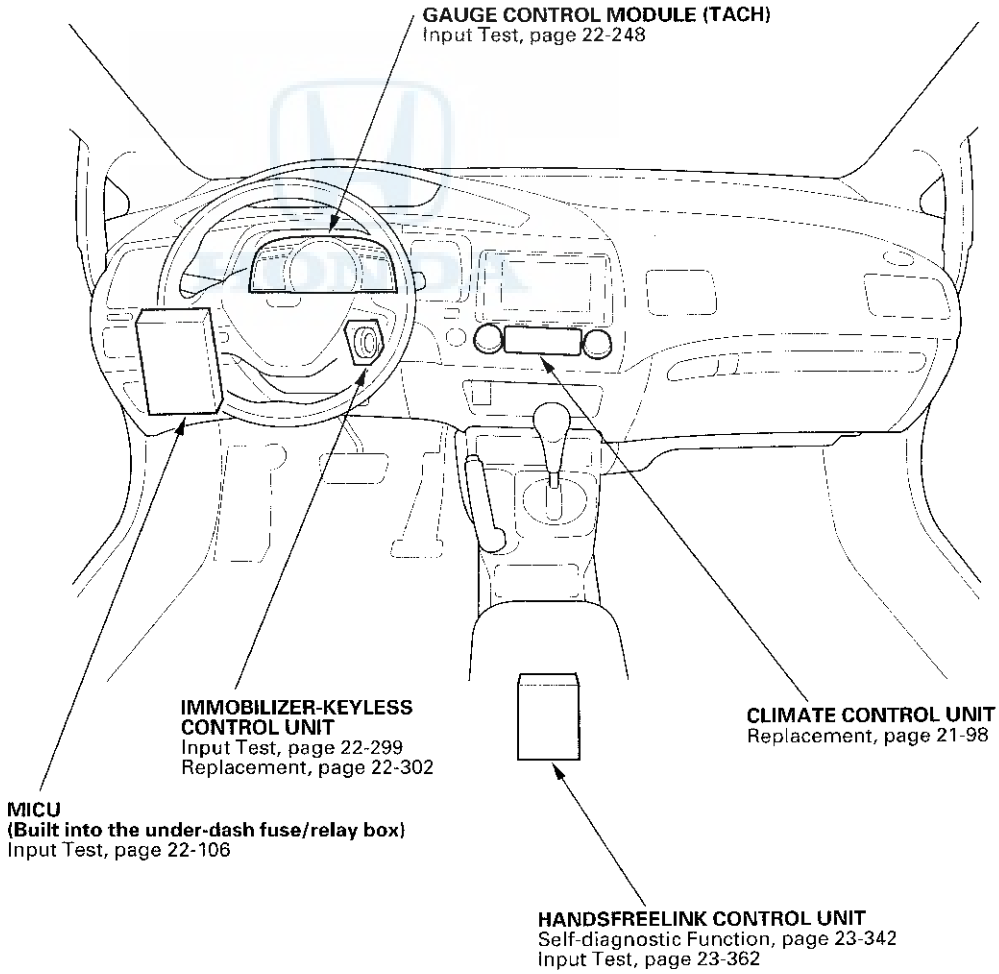

General Troubleshooting Information

Using the HDS (Preferred method)

1. Go to B-CAN System Diagnosis Test Mode A to check for "Connected units" and DTCs (see page 22-89).
2. If no DTCs are retrieved, go to B-CAN System Diagnosis Test Mode C (see page 22-91) or D (see page 22-92).

Without HDS (Use only if the HDS is unavailable)

1. Check for communication circuit problems using B-CAN System Diagnostic Test (see page 22-93).
2. Check for DTCs.
3. Sort, and then troubleshoot the DTCs in the order below.
   - -1 Battery voltage DTCs
   - -2 Internal error DTCs
   - -3 Loss of communication DTCs
     NOTE: If the DTC B1000 is stored, troubleshoot DTC B1000 first (see page 22-98).
   - -4 Signal error DTCs
4. If no DTCs are retrieved, use B-CAN System Diagnostic Test Mode 2 to check all inputs related to failure (see step 10 on page 22-93).

How to display DTCs on the gauge control module (tach)

While in Test Mode 1, the DTCs which have been detected and stored individually by various B-CAN (Body-controller Area Network) units, will be shown one by one on the odometer/trip meter display when the communication between the MICU and the gauge control module (tach) is normal. To scroll through the DTCs, press the select/reset button.

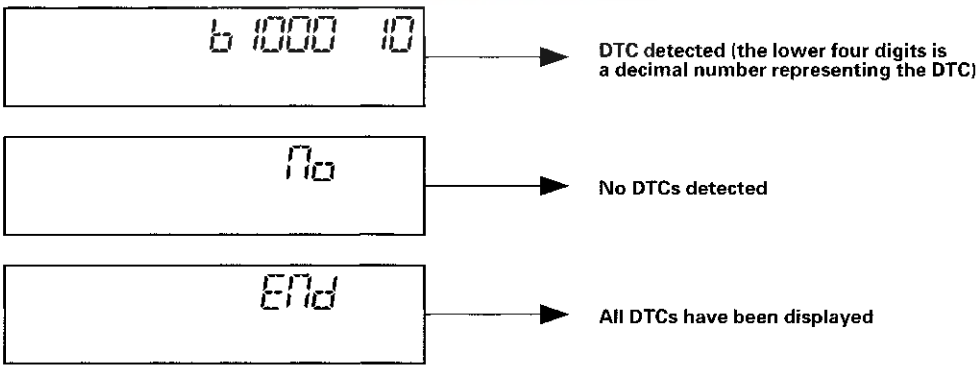

The unit that has stored the code can be identified by the number shown on the multi-information display.

MICU	10
Gauge control module	50
Climate control unit	51
HandsFreeLink control unit	94
Immobilizer-keyless control unit	96

How to clear the DTC

While in Test Mode 1, press and hold down the SEL/RESET switch button for more than 10 seconds.

Troubleshooting CAN Circuit Related Problems

NOTE: Check the PCM for DTCs and troubleshoot PCM (see page 11-3) or F-CAN loss of communication errors first.

Loss of Communication DTC Cross-reference Chart

When an ECU is unable to communicate with the other ECUs on the CAN circuit, the other control unit will set loss of communication DTCs. Use this chart to find the control unit that is not communicating.

1. Find the transmitting control unit that is in the same row as all of the loss of communication DTCs retrieved.
2. Do the input test for the transmitting control unit.

BUS OFF and Internal Error Codes

DTC type	Related Unit				
	MICU	Gauge Control Module	Climate Control Unit	Hands-FreeLink Control Unit	Immobilizer-Keyless Control Unit
BUS OFF	B1000	B1150	B1200	B1750	B1900
ECU (CPU) Error	B1001				
ECU (EEPROM) Error	B1002	B1152	B1202		
ECU (Internal) Error				B1792	

Transmitting Control Unit	Message	Receiving Unit/Loss of Communication DTC			
		MICU	Gauge Control Module	Climate Control Unit	Immobilizer-Keyless Control Unit
MICU	RM		B1188		
	HLSW		B1155		
	WIPSW		B1156		
	MICU		B1157	B1211	
	DOORSW		B1159		
	DRLOCKSW		B1160		B1905
Gauge Control Module	VSP/NE	B1011		B1205	
	A/T	B1008			B1906
	ENGTEMP			B1206	
	ILLUMI			B1207	
	CDS (SRS)	B1032			
PCM	ENG		B1168		
	A/T		B1169		
VSA or ABS Modulator-Control Unit	VSA or ABS		B1170		
TPMS Control Unit	TPMS		B1173		
EPS Control Unit	EPS		B1183		
Servo Unit	RBS		B1184		
Motor Control Module (MCM)	BATT		B1185		
SRS	SRS		B1187		

DTC Troubleshooting Index

NOTE: Check the PCM for DTCs and troubleshoot PCM (see page 11-3) or F-CAN loss of communication errors first, then record all DTCs, and sort them by DTC type using the DTC troubleshooting index, then troubleshoot the DTC(s) in this order.

- Battery voltage DTCs
- Internal error DTCs
- Loss of communication DTCs (beginning with the lowest number first; for example, if B1008 and B1011 are retrieved, troubleshoot B1008 first).
- Signal error DTCs

MICU

DTC	Description	DTC type	Page
B1000	Communication bus line error (BUS-OFF)	Loss of communication	(see page 22-98)
B1001*1	MICU internal error (CPU error)	Internal error	(see page 22-100)
B1002	MICU internal error (EEPROM error)	Internal error	(see page 22-100)
B1008	MICU lost communication with gauge control module (A/T message)	Loss of communication	(see page 22-101)
B1011	MICU lost communication with gauge control module (VSP/NE message)	Loss of communication	(see page 22-101)
B1026	Front passenger's door lock switch LOCK/UNLOCK signal error	Signal error	(see page 22-118)
B1032	MICU lost communication with SRS unit (CDS message)	Signal error	(see page 22-102)
B1036	IG1 line input error	Signal error	(see page 22-102)
B1077	Windshield wiper (As) signal error	Signal error	(see page 22-206)
B1078	Daytime running lights system error (Canada)	Signal error	(see page 22-152)
B1079	Daytime running lights system error (USA)	Signal error	(see page 22-152)
B1127	Driver's door key cylinder switch LOCK/UNLOCK signal error	Signal error	(see page 22-120)
B1128	Driver's door lock switch LOCK/UNLOCK signal error	Signal error	(see page 22-121)
B1129	Driver's door lock knob switch LOCK/UNLOCK signal error	Signal error	(see page 22-123)
B1275*2	Combination light switch OFF position circuit malfunction	Signal error	(see page 22-154)
B1276*2	Combination light switch parking (SMALL) position circuit malfunction	Signal error	(see page 22-154)
B1278*2	Headlight switch ON position circuit malfunction	Signal error	(see page 22-154)
B1279*2	Headlight switch DIMMER position circuit malfunction	Signal error	(see page 22-156)
B1280*2	Turn signal switch circuit malfunction	Signal error	(see page 22-172)
B1281*2	Windshield wiper switch MIST position circuit malfunction	Signal error	(see page 22-208)
B1282*2	Windshield wiper switch INT position circuit malfunction	Signal error	(see page 22-208)
B1283*2	Windshield wiper switch LOW position circuit malfunction	Signal error	(see page 22-208)
B1284*2	Windshield wiper switch HIGH position circuit malfunction	Signal error	(see page 22-208)

* 1: '06-08 models
* 2: '07-09 models

Gauge Control Module

DTC	Description	DTC type	Page
B1150	Communication bus line error (BUS-OFF)	Loss of communication	(see page 22-103)
B1152	Gauge control module internal error (EEPROM error)	Internal error	(see page 22-235)
B1155	Gauge control module lost communication with MICU (Headlight switch message)	Loss of communication	(see page 22-235)
B1156	Gauge control module lost communication with MICU (Wiper switch message)	Loss of communication	(see page 22-235)
B1157	Gauge control module lost communication with MICU (MICU message)	Loss of communication	(see page 22-236)
B1159	Gauge control module lost communication with MICU (DOORSW message)	Loss of communication	(see page 22-235)
B1160	Gauge control module lost communication with MICU (DRLOCKSW message)	Loss of communication	(see page 22-236)
B1168	Gauge control module lost communication with PCM (Engine messages)	Loss of communication	(see page 22-237)
B1169	Gauge control module lost communication with PCM (A/T message)	Loss of communication	(see page 22-237)
B1170	Gauge control module lost communication with VSA modulator-control unit (VSA message)	Loss of communication	(see page 22-238)
B1173	Gauge control module lost communication with TPMS control unit (TPMS message)	Loss of communication	(see page 22-239)
B1175	Fuel level sensor (Fuel gauge sending unit) circuit open	Signal error	(see page 22-240)
B1176	Fuel level sensor (Fuel gauge sending unit) circuit short	Signal error	(see page 22-241)
B1177*	Abnormal battery voltage	Battery voltage	(see page 22-242)
B1178	F-CAN communication line error	Loss of communication	(see page 22-243)
B1183	Gauge control module lost communication with EPS control unit (EPS message)	Loss of communication	(see page 22-243)
B1184	Gauge control module lost communication with AHB SERVO UNIT (RBS message)	Loss of communication	(see page 22-244)
B1185	Gauge control module lost communication with MCM (BATT message)	Loss of communication	(see page 22-245)
B1187	Gauge control module lost communication with SRS unit (SRS message)	Loss of communication	(see page 22-246)
B1188	Gauge control module lost communication with MICU (RM message)	Loss of communication	(see page 22-235)

*: '06-08 models

(cont'd)

DTC Troubleshooting Index (cont'd)

Climate Control Unit

DTC	Description	DTC type	Page
B1200	Communication bus line error (BUS-OFF)	Loss of communication	(see page 22-104)
B1202	Climate control unit internal error (EEPROM error)	Internal error	(see page 21-36)
B1205	Climate control unit lost communication with gauge control module (VSP/NE message)	Loss of communication	(see page 21-36)
B1206	Climate control unit lost communication with gauge control module (ENGTEMP message)	Loss of communication	(see page 21-36)
B1207	Climate control unit lost communication with gauge control module (ILLUMI message)	Loss of communication	(see page 21-36)
B1209	Climate control unit lost communication with MICU (MICU/DOORSW message)	Loss of communication	(see page 21-36)
B1220	Recirculation control motor circuit short	Signal error	(see page 21-37)
B1225	In-car temperature sensor circuit open	Signal error	(see page 21-39)
B1226	In-car temperature sensor circuit short	Signal error	(see page 21-40)
B1227	Outside air temperature sensor circuit open	Signal error	(see page 21-41)
B1228	Outside air temperature sensor circuit short	Signal error	(see page 21-42)
B1229	Sunlight sensor circuit open	Signal error	(see page 21-43)
B1230	Sunlight sensor circuit short	Signal error	(see page 21-44)
B1231	Evaporator temperature sensor circuit open	Signal error	(see page 21-45)
B1232	Evaporator temperature sensor circuit short	Signal error	(see page 21-47)
B1233	Air mix control motor circuit open	Signal error	(see page 21-48)
B1234	Air mix control motor circuit short	Signal error	(see page 21-49)
B1235	Air mix control motor stuck	Signal error	(see page 21-50)
B1239	Mode control motor circuit open or short	Signal error	(see page 21-52)
B1240	Mode control motor, linkage, door malfunction	Signal error	(see page 21-54)
B1241	Blower motor circuit malfunction	Signal error	(see page 21-55)
B2967	An open in the humidity sensor circuit	Signal error	(see page 21-59)
B2968	A short in the humidity sensor circuit	Signal error	(see page 21-60)
B2983	Recirculation control motor, linkage, door malfunction	Signal error	(see page 21-63)
B2986	Recirculation control motor circuit open	Signal error	(see page 21-64)
B2989	A problem in the A/C compressor motor	Signal error	(see page 21-65)
B2990	A problem in the A/C compressor driver	Signal error	(see page 21-65)
B2992	An open in the thermal protector circuit	Signal error	(see page 21-66)
B2993	A short in the thermal protector circuit	Signal error	(see page 21-67)
B2995	A problem in the auxiliary electric water pump circuit	Signal error	(see page 21-68)
B2996	An open in the heater core temperature sensor circuit	Signal error	(see page 21-71)
B2997	A short in the heater core temperature sensor circuit	Signal error	(see page 21-72)
B2998	A problem in the A/C inverter driver	Signal error	(see page 21-73)
B2999	A problem in the A/C compressor driver valve	Signal error	(see page 21-73)

HandsFreeLink Control Unit

DTC	Description	DTC type	Page
B1750	Communication bus line error (BUS-OFF)	Loss of communication	(see page 22-104)
B1775	Microphone input/output short to power/open	Signal error	(see page 23-350)
B1776	Microphone input/output short to ground/open	Signal error	(see page 23-351)
B1779	HFL switch (HFL talk/HFL back buttons) circuit open/short	Signal error	(see page 23-353)
B1780	HFL switch (HFL talk/HFL back buttons) circuit short	Signal error	(see page 23-355)
B1792	HandsFreeLink control unit internal error	Internal error	(see page 23-356)

Immobilizer-Keyless Control Unit

DTC	Description	DTC type	Page
B1900	Communication bus line error (BUS-OFF)	Loss of communication	(see page 22-105)
B1905	Immobilizer-keyless control unit lost communication with MICU (DRLOCKSW message)	Loss of communication	(see page 22-287)
B1906	Immobilizer-keyless control unit lost communication with gauge control module (A/T message)	Loss of communication	(see page 22-288)
B1925	Ignition key switch signal input error	Signal error	(see page 22-289)

HONDA

Multiplex Integrated Control System

System Description

Multiplex Integrated Control System

The MICU (built into the under-dash fuse/relay box) is one of the B-CAN components. The MICU controls many systems related to the body controller area and a security system, and also works as a gateway to diagnose the other B-CAN connected ECUs with the HDS.
Refer to each system circuit diagram for details.

System	Function
Multiplex Control	Sends the switch input signal information to the MICU and outputs the information. The MICU controls the ECUs electric load and communication based upon the information received the B-CAN.
On-Board Diagnosis	The MICU has a gateway function which sends the results of the MICU internal diagnosis and the B-CAN connected ECUs diagnosis to the HDS.
Self-Diagnosis	Test mode 1 diagnoses the communication line between the MICU and B-CAN connected unit. Test mode 2 checks the switch inputs connected to the MICU.
Interior Light(s)	The MICU controls the interior lights ON, OFF and dimming based upon the information of the related switches and/or the B-CAN related information.
Sleep Function	The MICU has a sleep function, which it enters during the power down mode.

The MICU also controls the function of these circuits:

- Entry lights control (map lights and ceiling light)
- Exterior lights control (including the daytime running lights control)
- Horn
- Interlock system
- Key-in reminder
- Keyless entry
- Lights-on reminder
- Power door locks
- Power window key-off timer
- Seat belt reminder
- Security alarm
- Turn signal/hazard warning lights
- Wiper/washer

HONDA

Communication Line

The body controller area network (B-CAN) and the fast controller area network (F-CAN) share information between multiple electronic control units (ECUs). B-CAN communication moves at a slower speed (33.33 kbps) for convenience related items and for other functions. F-CAN information moves at a faster speed (500 kbps) for "real time" functions such as fuel and emissions data. To allow both systems to share information, the gauge control module translates information from B-CAN to F-CAN and from F-CAN to B-CAN.

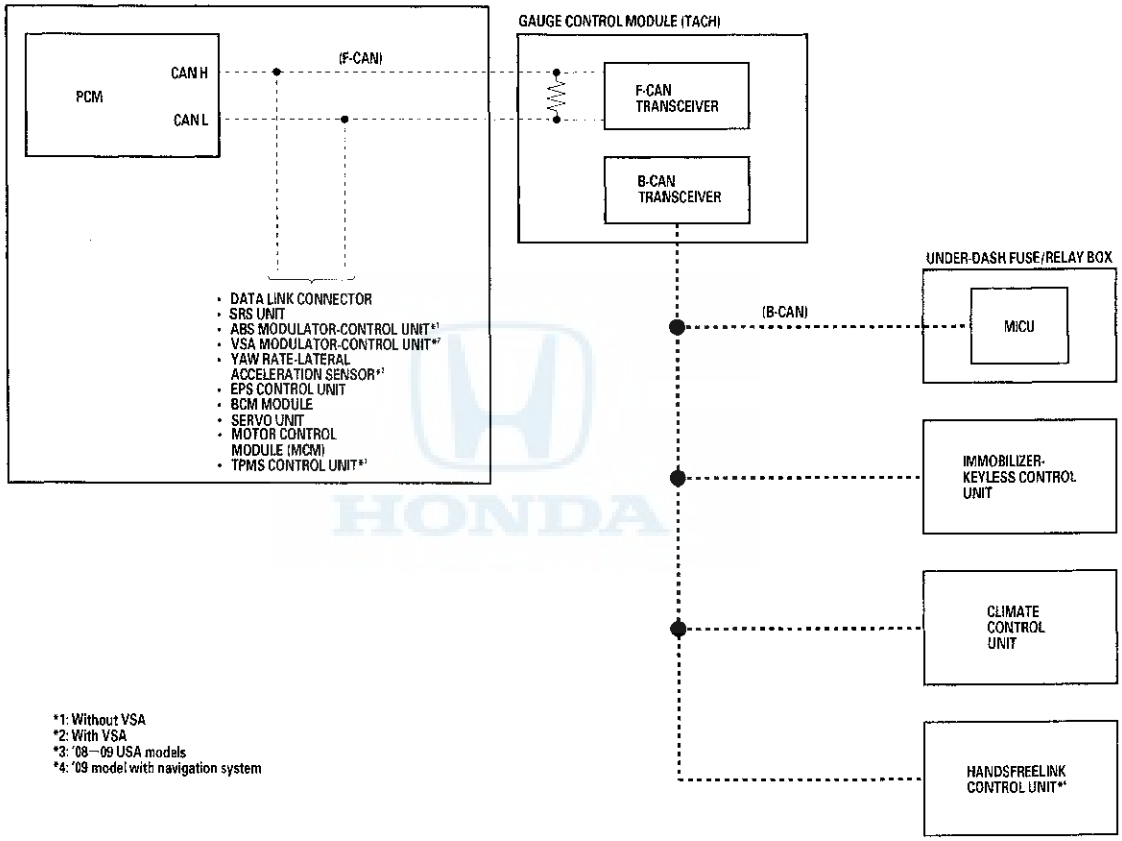

- The single wire method is used between the units not requiring the communication to move at a faster speed for "real time" functions such as fuel and emissions data.
- Using a single wire method reduces the number of the wires used on the body controller area network.

(cont'd)

System Description (cont'd)

Gateway Function

The gauge control module (tach) acts as a gateway to allow both systems to share information, the gauge control module translates information from B-CAN to F-CAN and from F-CAN to B-CAN.

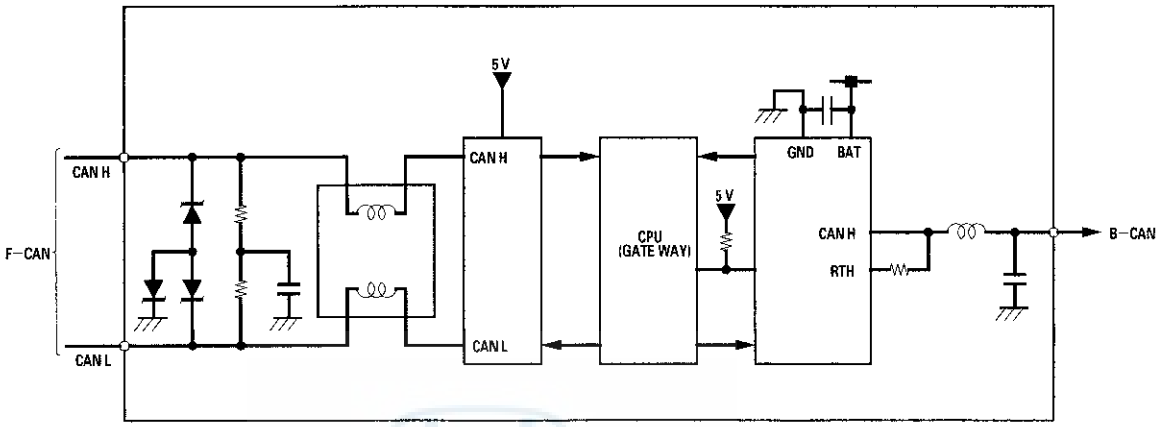

Network "Loss of Communication" Error Checking Function

The ECUs on the CAN circuit send messages to each other. If there are any malfunctions on the network, the odo/trip display on the gauge control module can indicate the error messages by entering the gauge self-diagnostic function (see page 22-223). There are three types of messages as follows:

Error Code List

Error code	Type of communication line(s) error
Error 1	F-CAN communication
Error 2	B-CAN communication
Error 3	UART communication
Error 12	F-CAN and B-CAN communication
Error 13	F-CAN and UART communication
Error 23	B-CAN and UART communication
Error 123	F-CAN, B-CAN and UART communication

Example: Error 1

Self-diagnostic Function

By connecting the HDS to the data link connector (DLC), the HDS can retrieve and indicate the diagnostic results from the MICU via a diagnostic line called K-LINE. The K-LINE is distinguished from the CAN line, and connected to the CAN related ECUs. The MICU is a gateway between the HDS and B-CAN related ECUs, and sends B-CAN diagnostic results to the HDS.

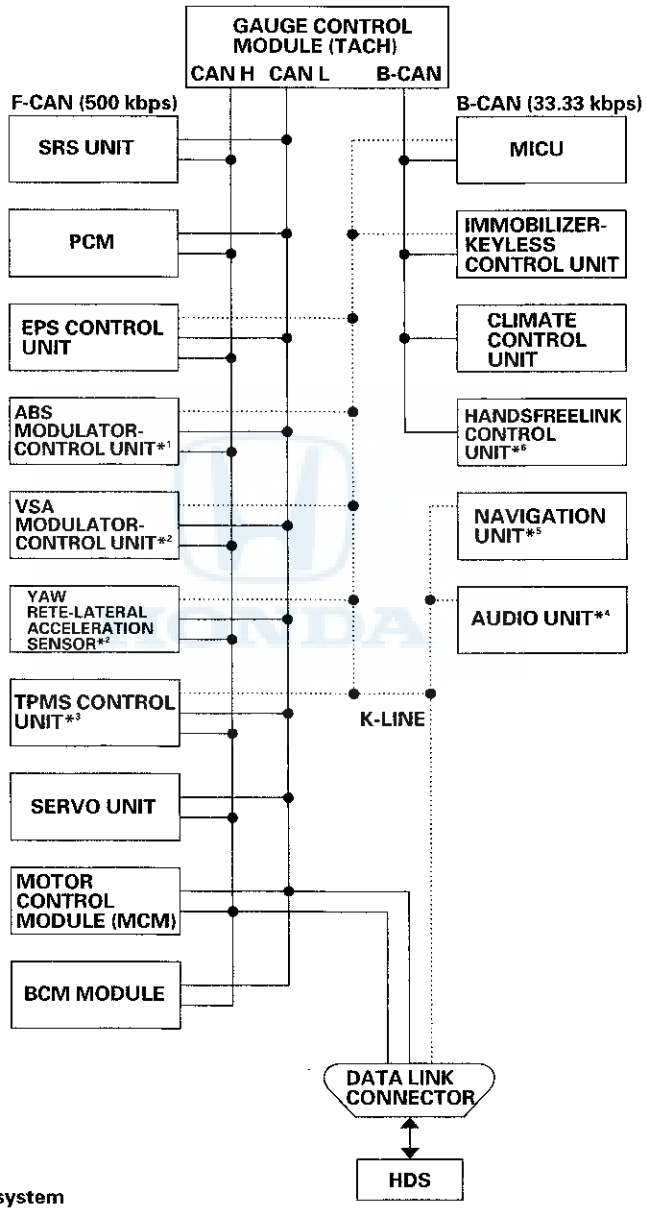

*1: Without VSA
*2: With VSA
*3: '08-09 USA models
*4: Without navigation system
*5: With navigation system
*6: '09 model with navigation system

(cont'd)

System Description (cont'd)

Wake-up and Sleep Function

The multiplex integrated control system has "wake-up" and "sleep" functions to decrease parasitic draw on the battery when the ignition switch in LOCK (0).

- In the sleep mode, the MICU stops functioning (communication and CPU control) when it is not necessary for the system to operate.
- As soon as any operation is requested (for example, a door is unlocked), the related control unit in the sleep mode immediately wakes up and begins to function.
- When the ignition switch is turned to LOCK (0), and the driver's door is opened, then closed, there is a delay of about 40 seconds before the control unit goes from the wake-up mode to the sleep mode.
- The sleep mode will not function if any door is opened or if a key is in the ignition switch.
- The draw is reduced from 200 mA to less than 35 mA when in the sleep mode.

NOTE: Sleep and Wake-up Mode Test (see page 22-95).

Fail-safe Function

To prevent improper operation, the MICU has a fail-safe function. In the fail-safe mode, the output signal is fixed when any part of the system malfunctions (for example, a faulty control unit or communication line).
Each control unit has a hardware fail-safe function that fixes the output signal when there is a CPU malfunction, and a software fail-safe function that ignores the signal from a malfunctioning control unit, which allows the system to operate normally.

Hardware Fail-safe Control

Fail-safe function
When a CPU problem or a abnormal power supply voltage is detected, the MICU moves to the hardware fail-safe mode, and each system output load is set to a pre-programmed fail-safe value.

Software Fail-safe Control

When any of the data from the B-CAN circuit cannot be received within a specified time, or an unusual combination of the data is recognized, the MICU moves to the software fail-safe mode. The data that cannot be received is forced to a pre-programmed value.

Power Supply Voltage Monitoring Function

The MICU monitors the power supply voltage (back-up voltage). If the voltage goes below 10 V, the MICU sends a MICU message and will not store DTCs.

	Input	Output
MICU	Battery voltage	MICU* * : MICU internal circuit

Entry Lights Control System

The MICU controls the ceiling light ON/OFF and dimming based upon input signals from each switch.

	Input	Output
MICU	IG1 power supply Ignition key switch Driver's door switch Front passenger's door switch Left rear door switch Right rear door switch Driver's door lock knob switch (LOCK)	Interior light
B-CAN	Keyless LOCK signal	

Lighting System (Headlights, Parking Lights, Side Marker Lights, License Plate Lights, and Taillights)

The MICU contains the relay circuits for the headlight high/low beams and taillights, and controls the lighting system ON/OFF based upon input signals from the combination light switch.

	Input	Output
MICU	Headlight OFF switch Headlight ON switch Dimmer switch Combination light switch (parking lights, side marker lights, license plate lights, and taillights) Passing switch	Headlights (low beam) Headlights (high beam) Parking lights Side marker lights License plate lights Taillights

Daytime Running Lights

The MICU controls the exterior lights as daytime running lights based upon input signals from each switch.

	Input	Output
MICU	Headlight OFF switch Headlight ON switch Dimmer switch Combination light switch (parking lights, side marker lights, license plate lights, and taillights) Passing switch	Headlights (low beam) Headlights (high beam) Parking lights Side marker lights License plate lights Taillights
B-CAN	Transmission range switch (P position) Parking brake switch	

Turn Signal/Hazard Warning Lights

The MICU controls the turn signal/hazard warning lights based upon input signals from the turn signal and hazard warning switches.

	Input	Output
MICU	IG1 power supply Turn signal switch (left/right) Hazard warning switch	Turn signal lights (left/right)

(cont'd)

System Description (cont'd)

Power Door Locks (Vehicle Speed Sensor)

The MICU controls the door lock actuators based upon B-CAN signals and input signals from each switch.

	Input	Output
MICU	IG1 power supply Driver's door switch Front passenger's door switch Left rear door switch Right rear door switch Trunk lid latch switch Driver's door lock knob switch (UNLOCK) Front passenger's door lock knob switch (UNLOCK) Left rear door lock knob switch (UNLOCK) Right rear door lock knob switch (UNLOCK) Transmission range switch (P position)	Door lock (LOCK)
B-CAN	Vehicle speed pulse Engine RPM	

Power Door Locks (Normally LOCK/UNLOCK Operation)

The MICU controls the door lock actuators based upon input signals from each switch.

	Input	Output
MICU	IG1 power supply Ignition key switch Driver's door switch Front passenger's door switch Left rear door switch Right rear door switch Trunk lid latch switch Driver's door lock knob switch (LOCK) Driver's door lock switch (LOCK/UNLOCK) Driver's door key cylinder switch (UNLOCK) Front passenger's door lock switch (LOCK/UNLOCK)	Door lock actuator (LOCK/UNLOCK) Driver's door lock actuator (UNLOCK)

Door Lock Response Operation

The MICU controls the door lock actuators based upon B-CAN signals.

	Input	Output
B-CAN	Door lock signals	Door lock actuator (LOCK/UNLOCK) Driver's door lock actuator (UNLOCK) Trunk lid release actuator

Power Windows Key-off Operation

The MICU controls the power windows key-off operation based upon input signals from each switch.

	Input	Output
MICU	IG1 power supply Ignition key switch Driver's door switch Front passenger's door switch	Power window key-off timer

Keyless Entry System

The MICU controls the door lock actuators based upon B-CAN signals and input signals from each switch.

	Input	Output
MICU	IG1 power supply Ignition key switch Driver's door switch Front passenger's door switch Left rear door switch Right rear door switch Trunk lid latch switch Driver's door lock knob switch (LOCK/UNLOCK) Driver's door lock switch (LOCK/UNLOCK) Driver's door key cylinder switch (UNLOCK) Front passenger's door lock switch (LOCK/UNLOCK)	Door lock actuator (LOCK/UNLOCK) Driver's door lock actuator (UNLOCK) Trunk lid release actuator
B-CAN	Keyless LOCK signal	

Keyless PANIC

The MICU controls the keyless PANIC based upon B-CAN signals.

	Input	Output
B-CAN	Keyless PANIC signal (action, headlight low, parking light and horn)	Headlights (low beam) Parking lights Side marker lights License plate lights Taillights Horn

Security Alarm System

The MICU controls the lighting system and horn based upon B-CAN signals and input signals from each switch.

	Input	Output
MICU	IG1 power supply Ignition key switch Audio switch Driver's door switch Front passenger's door switch Left rear door switch Right rear door switch Trunk lid latch switch Driver's door key cylinder switch (UNLOCK) Driver's door lock knob switch (UNLOCK) Front passenger's door lock knob switch (UNLOCK) Left rear door lock knob switch (UNLOCK) Right rear door lock knob switch (UNLOCK) Trunk key cylinder switch Hood switch	Horn Headlights Parking lights Side marker lights License plate lights Taillights
B-CAN	Keyless LOCK signal Door lock signal	

(cont'd)

System Description (cont'd)

Key-in Reminder

The MICU controls the door lock actuators based upon ignition key switch, driver's door switch, and driver's door lock knob switch signals.

	Input	Output
MICU	Ignition key switch Driver's door switch Driver's door lock knob switch (UNLOCK)	Door lock actuator (LOCK/UNLOCK) Driver's door lock actuator (UNLOCK)

Key Interlock

The MICU controls the key interlock solenoid based upon IG1, transmission range switch, and park-pin switch signals.

	Input	Output
MICU	Ignition switch ACC Transmission range switch (P position) Park-pin switch	Key interlock solenoid

Answer Back Response Operation

The MICU controls the lighting system and horn based upon B-CAN signals.

	Input	Output
B-CAN	Answer back signals (headlight low, horn, parking lights)	Horn Headlights Parking lights Side marker lights License plate lights Taillights

Wiper/Washer

The MICU controls the wiper motor and the washer motor based upon IG1 and wiper/washer switch signals.

	Input	Output
MICU	IG1 power supply Wiper switch (INT and LO) Wiper switch (LO and HI) Wiper switch (MIST) Washer switch Wiper intermittent volume	Wiper motor Washer motor

Collision Detection Signal (CDS)

The MICU controls the door lock actuators based upon IG1 and B-CAN signals.

	Input	Output
MICU	IG1 power supply	Door lock (LOCK/UNLOCK)
B-CAN	SRS signal (front, side and rear)	

HDS Inputs and Commands

Certain inputs happen so quickly that the HDS cannot update fast enough. Hold the switch that is being tested while monitoring the Data List. This should give the HDS time to update the signal on the Data List.
Because the HDS software is updated to support the release for newer vehicles it is not uncommon to see system function tests that are not supported.
Make sure that the most current software is loaded.

Input:

System Menu	Data List Indication	Data List and Operation Time
Lighting	Driver's Door Switch	OFF/ON
	Hazard switch	OFF/ON
	Headlight Switch (OFF)	OFF/ON
	Headlight Switch (PARKING)	OFF/ON
	Headlight Switch (HEADLIGHT)	OFF/ON
	Headlight Switch (High Beam)	OFF/ON
	Headlight Switch (PASSING)	OFF/ON
	Turn Signal Switch (LEFT)	OFF/ON
	Turn Signal Switch (RIGHT)	OFF/ON
	Fog Light Switch	OFF/ON
	Ignition Key Cylinder Light Command	OFF/ON
	Interior Light Command	OFF/ON
	Left Turn Signal Command	OFF/ON
	Right Turn Signal Command	OFF/ON
	Headlight Command	OFF/ON
	Headlight High Beam Command	OFF/ON
	Parking Light Command	OFF/ON
	Fog Light Command	OFF/ON
	DRL Command	OFF/ON

(cont'd)

System Description (cont'd)

Input:

System Menu	Data List Indication	Data List and Operation Time
Gauge	Cruise Control Main Switch	OFF/ON
	Cruise Control Set Switch	OFF/ON
	Cruise Control Resume Switch	OFF/ON
	Washer Fluid Level Switch	OFF/ON
	VSA/TCS Off Switch	OFF/ON
	Gauge Select/Reset Switch	OFF/ON
	Parking Brake Switch	OFF/ON
	Brake Fluid Level Switch	OFF/ON
	Illumination Volume Plus Switch	OFF/ON
	Illumination Volume Minus Switch	OFF/ON
	Km/h mph Select Switch	OFF/ON
	Fuel Sending Unit Input 1	deg
	Fuel Sending Unit Input 2	v
	VSA/TCS Active Indicator	OFF/ON
	VSA/TCS Indicator (Warning)	OFF/ON
	ABS Indicator	OFF/ON
	EBD Indicator (Electronic Brake Distribution)	OFF/ON
	Cruise Control Main Switch Indicator	OFF/ON
	MIL Indicator	OFF/ON
	Washer Fluid Level Indicator (Canada)	OFF/ON
	DRL Indicator	OFF/ON
	Low Oil Pressure Indicator	OFF/ON
	Charging System Indicator	OFF/ON
	Cruise Main Switch ON Indicator	OFF/ON
	Maintenance Minder Indicator	OFF/ON
	High Beam Indicator	OFF/ON
	Parking Light ON Indicator	OFF/ON
	Low Fuel Warning Indicator	OFF/ON
	Security Indicator	OFF/ON
	Fog Light Indicator	OFF/ON
	Seat Belt Indicator	OFF/ON
	IMA Auto-stop Indicator	OFF/ON
	IMA Indicator	OFF/ON
	IMA Battery Level	xxx (Number of segment to turn on)
	IMA Assist/Charge Indicator	A/B/C (Neutral and Charge/Neutral/Neutral and Assist)
	Speed Indicator (km/h)	0—249 km/h, over 250 km/h, Fail
	Speed Indicator (mph)	0—154 mph, over 155 mph, Fail
	Driver's Seat Belt Buckle Switch	OFF/ON
	A/T Gear Position Switch (R)	OFF/ON
	A/T Gear Position Switch (P)	OFF/ON
	Low Tire Pressure Indicator	OFF/ON
	TPMS Indicator	OFF/ON

Input:

System Menu	Data List Indication	Data List and Operation Time
Door Locks	Driver's Door Switch	OFF/ON
	Front Passenger's Door Switch	OFF/ON
	Driver's Rear Door Switch	OFF/ON
	Passenger's Rear Door Switch	OFF/ON
	Front Passenger's Door Lock Sw. (LOCK)	OFF/ON
	Front Passenger's Door Lock Sw. (UNLOCK)	OFF/ON
	Front Passenger's Door Lock Knob Sw. (UNLOCK)	OFF/ON
	Driver's Rear Door Lock Knob Switch (UNLOCK)	OFF/ON
	Passenger's Rear Door Lock Knob Sw. (UNLOCK)	OFF/ON
	Driver's Door Key Cylinder Switch (LOCK)	OFF/ON
	Driver's Door Key Cylinder Switch (UNLOCK)	OFF/ON
	Driver's Door Lock Switch (LOCK)	OFF/ON
	Driver's Door Lock Switch (UNLOCK)	OFF/ON
	Driver's Door Lock Knob Switch (LOCK)	OFF/ON
	Driver's Door Lock Knob Switch (UNLOCK)	OFF/ON
	Door LOCK Command	OFF/ON
	Door UNLOCK Command	OFF/ON
	Driver's Door UNLOCK Command	OFF/ON
Wipers	Brake Pedal Position Switch	OFF/ON
	Windshield Wiper Switch (LOW)	OFF/ON
	Windshield Wiper Switch (HIGH)	OFF/ON
	Windshield Wiper Switch (MIST)	OFF/ON
	Windshield Wiper Switch (INT)	OFF/ON
	Windshield Washer Switch	OFF/ON
	Windshield Wiper Motor PARK Switch	OFF/ON
	Intermittent Wiper Dwell Timer	0.0—1.0 kΩ/OPEN
	Windshield Wiper Motor HI Command	OFF/ON
	Windshield Wiper Motor LO Command	OFF/ON
	Windshield Washer Motor Command	OFF/ON
A/C	A/C Pressure Switch/Thermal Protector	OFF/ON

(cont'd)

System Description (cont'd)

Input:

System Menu	Data List Indication	Data List and Operation Time
Security	Ignition Key Cylinder Switch	OFF/ON
	Driver's Door Switch	OFF/ON
	Front Passenger's Door Switch	OFF/ON
	Driver's Rear Door Switch	OFF/ON
	Passenger's Rear Door Switch	OFF/ON
	Trunk Lid/Tailgate Switch	OFF/ON
	Front Passenger's Door Lock Sw. (LOCK)	OFF/ON
	Front Passenger's Door Lock Sw. (UNLOCK)	OFF/ON
	Front Passenger's Door Lock Knob Sw. (UNLOCK)	OFF/ON
	Driver's Rear Door Lock Knob Switch (UNLOCK)	OFF/ON
	Passenger's Rear Door Lock Knob Sw. (UNLOCK)	OFF/ON
	Trunk Key Cylinder (UNLOCK)	OFF/ON
	Radio Switch	OFF/ON
	Hazard Switch	OFF/ON
	Hood Switch	OFF/ON
	Driver's Door Key Cylinder Switch (LOCK)	OFF/ON
	Driver's Door Key Cylinder Switch (UNLOCK)	OFF/ON
	Driver's Door Look Switch (LOCK)	OFF/ON
	Driver's Door Look Switch (UNLOCK)	OFF/ON
	Driver's Door Look Knob Switch (LOCK)	OFF/ON
	Driver's Door Look Knob Switch (UNLOCK)	OFF/ON
	Door LOCK Command	OFF/ON
	Door UNLOCK Command	OFF/ON
	Driver's Door UNLOCK Command	OFF/ON
	Security Hazard Signal Command	OFF/ON
	Headlight Command	OFF/ON
	Headlight High Beam Command	OFF/ON
	Parking Light Command	OFF/ON
	Horn Command	OFF/ON

Input:

System Menu	Data List Indication	Data List and Operation Time
Keyless	Driver's Door Switch	OFF/ON
	Front Passenger's Door Switch	OFF/ON
	Driver's Rear Door Switch	OFF/ON
	Passenger's Rear Door Switch	OFF/ON
	Trunk Lid/Tailgate Switch	OFF/ON
	Front Passenger's Door Lock Sw. (LOCK)	OFF/ON
	Front Passenger's Door Lock Sw. (UNLOCK)	OFF/ON
	Front Passenger's Door Lock Knob Sw. (UNLOCK)	OFF/ON
	Driver's Rear Door Lock Knob Switch (UNLOCK)	OFF/ON
	Passenger's Rear Door Lock Knob Sw. (UNLOCK)	OFF/ON
	Trunk Key Cylinder (UNLOCK)	OFF/ON
	Driver's Door Key Cylinder Switch (LOCK)	OFF/ON
	Driver's Door Key Cylinder Switch (UNLOCK)	OFF/ON
	Driver's Door Lock Switch (LOCK)	OFF/ON
	Driver's Door Lock Switch (UNLOCK)	OFF/ON
	Driver's Door Lock Knob Switch (LOCK)	OFF/ON
	Driver's Door Lock Knob Switch (UNLOCK)	OFF/ON
	Door LOCK Command	OFF/ON
	Door UNLOCK Command	OFF/ON
	Driver's Door UNLOCK Command	OFF/ON
	Trunk Lid Release Command	OFF/ON

(cont'd)

System Description (cont'd)

Output:

System Menu	Data List Indication	Data List and Operation Time
Gauge	Self Diagnostic Test	———
Lighting	Interior Light Command	Illuminate for 30 seconds
	Hazard flasher	Blinks turn signal (left and right) for 15 seconds
	Left Turn Signal Command	Blink for 5 seconds
	Right Turn Signal Command	Blink for 5 seconds
	Headlight Command	Operates head light (low) for 15 seconds
	Headlight HIGH Beam Command	Operates head light (high) for 15 seconds
	Fog Light	Operates a relay of front fog light for 15 seconds
	Parking Light Command	Operates small light for 15 seconds
Door Locks	LOCK all doors	Outputs LOCK signal 1 time (0.6 sec) to all door
	UNLOCK driver's side door	Outputs UNLOCK signal 1 time (0.6 sec) to driver side door
	UNLOCK all doors	Outputs UNLOCK signal 1 time (0.6 sec) to all door
Keyless	Trunk Lid/Tailgate Release Command	Unlock trunk
Security	Horn Command	Operates horn for 1 second
Wipers	Windshield Wiper Motor LOW Command	Operates front wiper for 5 seconds (low speed)
	Windshield Wiper Motor HIGH Command	Operates front wiper for 5 seconds (high speed)
	Windshield Washer Command	Operates front washer for 5 seconds

Troubleshooting - B-CAN System Diagnosis Test Mode A

Check the PCM for DTCs and troubleshoot PCM (see page 11-3) or F-CAN loss of communication errors first, then do this diagnosis first if the symptom is related to the B-CAN system.

NOTE: Always cycle the ignition switch within 3 seconds when prompted in the DTC troubleshooting procedures in this section.

1. Compare the symptom with this list of B-CAN related systems:

   - Gauge control module
   - Exterior lights
   - Turn signals
   - Entry light control
   - Interior lights
   - Door-open and trunk-open indicators
   - Horns (security and panic)
   - Chimes (key-in, seat belt, lights-on, and parking brake)
   - Power window
   - Wiper/washer
   - Security
   - Keyless entry
   - Power door locks
   - Climate control
   - Key interlock
   - Dash light brightness

   Is the symptom related to the B-CAN system?

   YES—Go to step 2.

   NO—Go to the system troubleshooting for the system with the symptom. ■

2. Connect the HDS to the data link connector (A), then turn the ignition switch to ON (II).

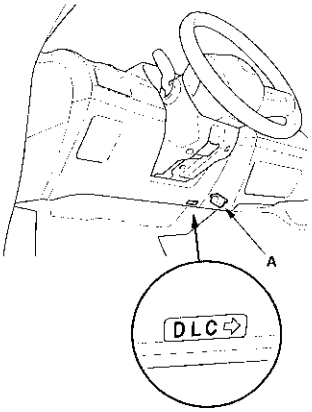

3. From the BODY ELECTRICAL menu, select UNIT INFORMATION, and then select CONNECTED UNIT listed to see if the following control units are communicating with the HDS.

   - MICU
   - Gauge control module
   - Climate control unit
   - Immobilizer-keyless control unit
   - HandsFreeLink control unit

   NOTE:
   - If a unit is communicating with the HDS, DETECT will be displayed.
   - If a unit is not communicating or the vehicle is not equipped, "Not Available" will be displayed.

   Are all control units communicating with the HDS?

   YES—Go to step 4.

   NO—If any of the control units are not communicating, go to B-CAN System Diagnosis Test Mode B (see page 22-90). If all units are not communicating or only the MICU is communicating, go to DTC B1000 troubleshooting (see page 22-98). ■

(cont'd)

Troubleshooting - B-CAN System Diagnosis Test Mode A (cont'd)

4. Select the system that has the problem from the BODY ELECTRICAL menu, then select DTCs.

   Are any DTCs indicated?

   YES—Go to step 5.

   NO—If the problem is related to one of the following items, go to B-CAN System Diagnosis Test Mode C (see page 22-91) if the system does not stop or turn off. Go to test mode D (see page 22-92) if the system does not run or turn on.

   - Exterior lights
   - Turn signals
   - Entry light control
   - Interior lights
   - Horns (security and panic)
   - Wiper/washer

   If the problem is related to one of the following items, go to the troubleshooting for that individual system.■

   - Gauge control module
   - Door-open and trunk-open indicators
   - Chimes (key-in, parking brake, seat belt and lights-on)
   - Security
   - Keyless entry
   - Climate control
   - Key interlock
   - Dash light brightness
   - Audio system
   - Navigation
   - HandsFreeLink

5. Record all DTCs, and sort them by DTC type.

6. Troubleshoot the DTC(s) in this order:

   - Battery voltage DTCs.
   - Internal error DTCs.
   - Loss of communication DTCs. Begin troubleshooting with the lowest number first (Example: if DTC B1008 and B1011 are retrieved, begin by troubleshooting B1008).
   - Signal error DTCs.

Troubleshooting - B-CAN System Diagnosis Test Mode B

Do this diagnosis if any of the control units are not communicating (Not Available is displayed in the HDS) as found by the B-CAN System Diagnosis Test Mode A (see page 22-89).

1. Using the HDS, select the system that has the symptom from the BODY ELECTRICAL menu.

2. Select DTCs, and then check for loss of communication DTCs.

   Are any loss of communication DTCs indicated?

   YES—Go to step 3.

   NO—Replace the MICU.■

3. Do the input test for the unit not communicating with the HDS.

Unit not communicating
MICU (see page 22-106)
Gauge control module (see page 22-248)
Climate control unit (see page 21-32)
Immobilizer-keyless control unit (see page 22-299)
HandsFreeLink control unit (see page 23-362)

Troubleshooting - B-CAN System Diagnosis Test Mode C

Do this diagnosis if a component that is controlled by the B-CAN system does not stop or turn off.

NOTE:
- If the component does not turn on, go to B-CAN System Diagnosis Test Mode D (see page 22-92).
- See the B-CAN system unit input/output index for a list of input and output devices and the control units that monitor the inputs and control the output devices (see page 22-83).
- Always cycle the ignition switch within 3 seconds when prompted in the DTC troubleshooting procedures in this section.

1. Check for DTCs by selecting the TEST MODE menu from the HDS.

   Are any DTCs indicated?

   YES—Go to B-CAN System Diagnosis Test Mode A (see page 22-89).■

   NO—Go to step 2.

2. Turn off the switch that controls the malfunctioning component.

3. Select DATA LIST from the TEST MODE menu, and check the input of the switch that controls the component.

   Does the HDS indicate the switch is OFF?

   YES—Go to step 4.

   NO—Go to step 6.

4. In the DATA LIST, check the output signal of the malfunctioning component.

   Is the output signal OFF?

   YES—Go to step 5.

   NO—Replace the control unit that controls the device that will not turn OFF (see page 22-83).■

5. Check the relay, if applicable, then check for a short in the wire between the relay and the component, the relay and control unit, or the component and control unit.

   Are the relay and the wire harness OK?

   YES—Replace the control unit that controls the component that will not turn OFF.■

   NO—Replace the relay or repair the wire harness.■

6. Check the switch, then check for a short in the wire between the switch and the control unit that monitors the switch.

   Are the switch and wire harness OK?

   YES—Replace the control unit that monitors the switch.■

   NO—Replace the switch or repair the wire harness.■

Troubleshooting - B-CAN System Diagnosis Test Mode D

Do this diagnosis if a component that is controlled by the B-CAN system does not run or come on.

NOTE:
- If the component does not turn off or stop, go to B-CAN System Diagnosis Test Mode C (see page 22-91).
- See the B-CAN system unit input/output index for a list of input and output devices and the control units that monitor the inputs and control the output devices (see page 22-83).
- Always cycle the ignition switch within 3 seconds when prompted in the DTC troubleshooting procedures in this section.

1. Check the fuse of the malfunctioning output device.

   Is the fuse OK?

   YES—Go to step 2.

   NO—Replace the fuse and recheck.■

2. Check for DTCs by selecting the TEST MODE menu from the HDS.

   Are any DTCs indicated ?

   YES—Go to B-CAN System Diagnosis Test Mode A (see page 22-89).■

   NO—Go to step 3.

3. Turn ON the switch that controls the malfunctioning component.

4. Select DATA LIST from the TEST MODE menu, and check output signal for the malfunctioning component.

   Is there an output signal?

   YES—Go to step 5.

   NO—Go to step 9.

5. Check the relay and ground, then check for an open or a short in the circuit for the malfunctioning component.

   Are the relay and circuit OK?

   YES—Go to step 6.

   NO—Replace the relay or repair the wire circuit.■

6. Do the function test for the malfunctioning component.

   Does the output device pass the function test?

   YES—Go to step 7.

   NO—Replace the component.■

7. With the malfunctioning output device connected, connect a voltmeter between the malfunctioning output device and body ground on the wire that the control unit uses to control the output device circuit.

8. Select MISC. TEST from the TEST MODE menu, and do the forced operation test of the malfunctioning component.

   Is there a change in voltage (12 V to 0 V or 0 V to 12 V)?

   YES—Inspect the ground for the component. If OK, replace the component.■

   NO—Replace the control unit that controls the malfunctioning component.■

9. Select DATA LIST from the TEST MODE menu, and make sure the switch signal input for the malfunctioning system indicates a change when operated.

   Does the switch input indicate ON when the switch is ON?

   YES—Replace the control unit that controls the malfunctioning component.■

   NO—Go to step 10.

10. Check the switch and its ground (if applicable), then check for an open or a short in the wire between the switch and the control unit that monitors it.

    Is the switch and the wire harness OK?

    YES—Replace the control unit that monitors the switch.■

    NO—Replace the switch or repair the wire harness.■

Troubleshooting - B-CAN System Diagnosis Test Mode 1 and Test Mode 2 (without the HDS)

Special Tools Required
MPCS (MCIC) service connector 07WAZ-001010A

Test Mode 1

Check the PCM for DTCs and troubleshoot PCM or F-CAN loss of communication errors first (see page 11-3), then do this diagnosis if the HDS is not available.

1. Check the No. 23 (10 A) fuse in the under-hood fuse/relay box and No. 10 (7.5 A) fuse in the under-dash fuse/relay box.

   Are the fuses OK?

   YES—Go to step 2.

   NO—Find and repair the cause of the blown fuse. ■

2. Remove the left kick panel (see page 20-54).

3. Turn the ignition switch to ON (II), and move the ceiling light switch to the middle (door) position.

4. Connect the MPCS service connector (A) to the MICU service check connector (B) in the under-dash fuse/relay box.

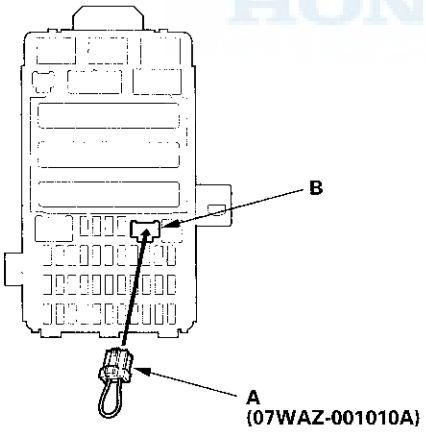

5. Wait 5 seconds, and watch the ceiling light. When the ceiling light flashes quickly once, and then go off, the system is in Test Mode 1.

6. Check for B-CAN DTCs indicated by the gauge control module (tach) odometer/trip meter display while still in Test Mode 1. Push the SEL/RESET switch button to display the next code. After you get to the last code, the display shows END. If no DTCs are stored, the display will read NO.

   Are any DTCs indicated?

   YES—Go to step 7.

   NO—Go to step 10.

7. Record all DTCs and sort them.

8. Troubleshoot the DTCs in this order:

   - Battery voltage DTCs
   - Internal error DTCs
   - Loss of communication DTCs (begin with the lowest number first; for example, if B1008 and B1011 are retrieved, troubleshoot B1008 first)
   - Signal error DTCs

9. Clear the DTCs by pressing and holding the SEL/RESET switch button for about 10 seconds. You will hear a beep to confirm the codes have been cleared. Operate the devices that failed, and recheck for codes.

Test Mode 2

10. Remove the MPCS service connector from the under-dash fuse/relay box socket for 5—10 seconds, then re-insert it to enter Mode 2. When the system enters Mode 2, the ceiling light will flash two times quickly and then go off.

    NOTE: If the MPCS connector is disconnected for too short or too long of a time, or the ignition switch is turned to LOCK (0), the system will return to Test Mode 1.

11. The following tables list the circuits that can be checked in Test Mode 2. Operate the switch that is most closely related to the problem. If the circuit is OK, the ceiling light will blink once. If the circuit is faulty, there will be no indication.

(cont'd)

Troubleshooting - B-CAN System Diagnosis Test Mode 1 and Test Mode 2 (without the HDS) (cont'd)

MICU

Item
Driver's door lock switch (UNLOCK)
Driver's door lock switch (LOCK)
Driver's door lock knob switch (UNLOCK)
Driver's door lock knob switch (LOCK)
Driver's door key cylinder switch* (UNLOCK)
Driver's door key cylinder switch* (LOCK)
Front passenger's door lock switch (UNLOCK)
Front passenger's door lock switch (LOCK)
Front passenger's door lock knob switch (UNLOCK)
Left rear door lock knob switch (UNLOCK)
Right rear door lock knob switch (UNLOCK)
Driver's door switch (OPEN)
Front passenger's door switch (OPEN)
Left rear door switch (OPEN)
Right rear door switch (OPEN)
Trunk lid latch switch (OPEN)
Trunk key cylinder switch (UNLOCK)
Audio switch
Windshield wiper HI/LO switch
Windshield wiper INT/LO switch
Windshield wiper MIST switch
Windshield washer switch (ON)
Windshield wiper intermittent dwell time controller
Turn signal switch (LEFT)
Turn signal switch (RIGHT)
Hazard warning switch (ON)
Headlight switch (ON)
Headlight switch (OFF)
Lighting switch (ON)
Dimmer switch (ON)
Passing switch (ON)
Hood switch (OPEN)
Transmission range switch (P)
Brake switch (ON)
Ignition key cylinder switch
Windshield wiper motor park switch
A/C pressure switch/thermal protector

* A second key is necessary to check the key cylinder inputs.
Be sure to rotate the key cylinder switch two times to each position (lock and lock, unlock and unlock) to ensure the door lock knob switch is in the appropriate position.

Does the ceiling light work properly in all switch positions?

YES—Go to function and input test for the system related to the failure. ■

NO—Repair the open, short, or replace the faulty switch. ■

Sleep and Wake-up Mode Test

1. Shift to the sleep mode:
   Turn the ignition switch to LOCK (0), and remove the key. If the MICU receives no signals from the inputs listed below, it will go into sleep mode in less than 40 seconds.

Driver's door lock switch (LOCK or UNLOCK)
Driver's door key cylinder switch (LOCK or UNLOCK)
Front passenger's door lock switch (LOCK or UNLOCK)
Trunk lid latch switch (Trunk lid closed)
Hazard warning switch (OFF)

2. Confirm the sleep mode:
   Measure the frequency on the B-CAN communication line (PNK wires); there should be 0 Hz when the system is in the sleep mode. Check the parasitic draw at the battery while shifting into the sleep mode; amperage should change from about 200 mA to less than 35 mA.

3. Shift to the wake up mode:
   When the ignition switch is turned to ON (II), the MICU, gauge control module, immobilizer-keyless control unit, and PCM wake up at the same time without "talking" to each other through the communication lines. When any switch in the multiplex integrated control system is turned on, it wakes up its related control unit which, in turn, wakes up the other units. After confirming the sleep mode, look in the following table for the switch most related to the problem. Operate that switch and see if its control unit wakes up.

   NOTE: If any control unit is faulty and will not wake up, several circuits in the system will malfunction at the same time. In the table below, the control unit is followed by a list of the switches and input signals that can wake it up.

Door switches (door open)
Driver's door lock switch (LOCK or UNLOCK)
Driver's door lock knob switch (LOCK or UNLOCK)
Driver's door key cylinder switch (LOCK or UNLOCK)
Front passenger's door lock switch (LOCK or UNLOCK)
Front passenger's door lock knob switch (LOCK or UNLOCK)
Left rear door lock knob switch
Right rear door lock knob switch
Trunk key cylinder switch (LOCK/UNLOCK)*
Trunk lid latch switch (Trunk lid open)
Hood switch (with security) (hood open)
Hazard warning switch (ON)
Combination light switch (Parking, Headlight, Dimmer, Passing ON)
Ignition key switch (key inserted)

*: '06-08 models

Circuit Diagram

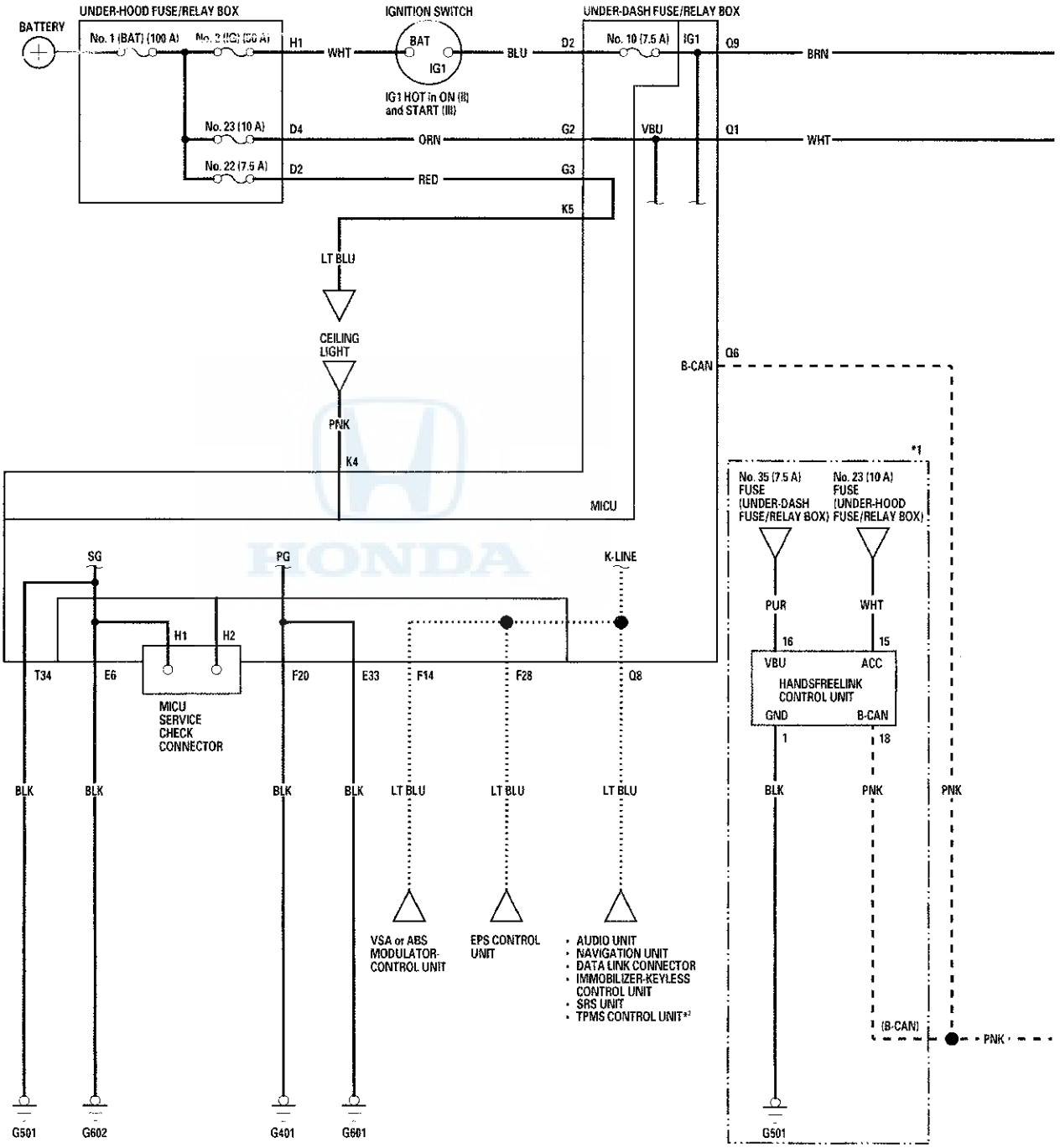

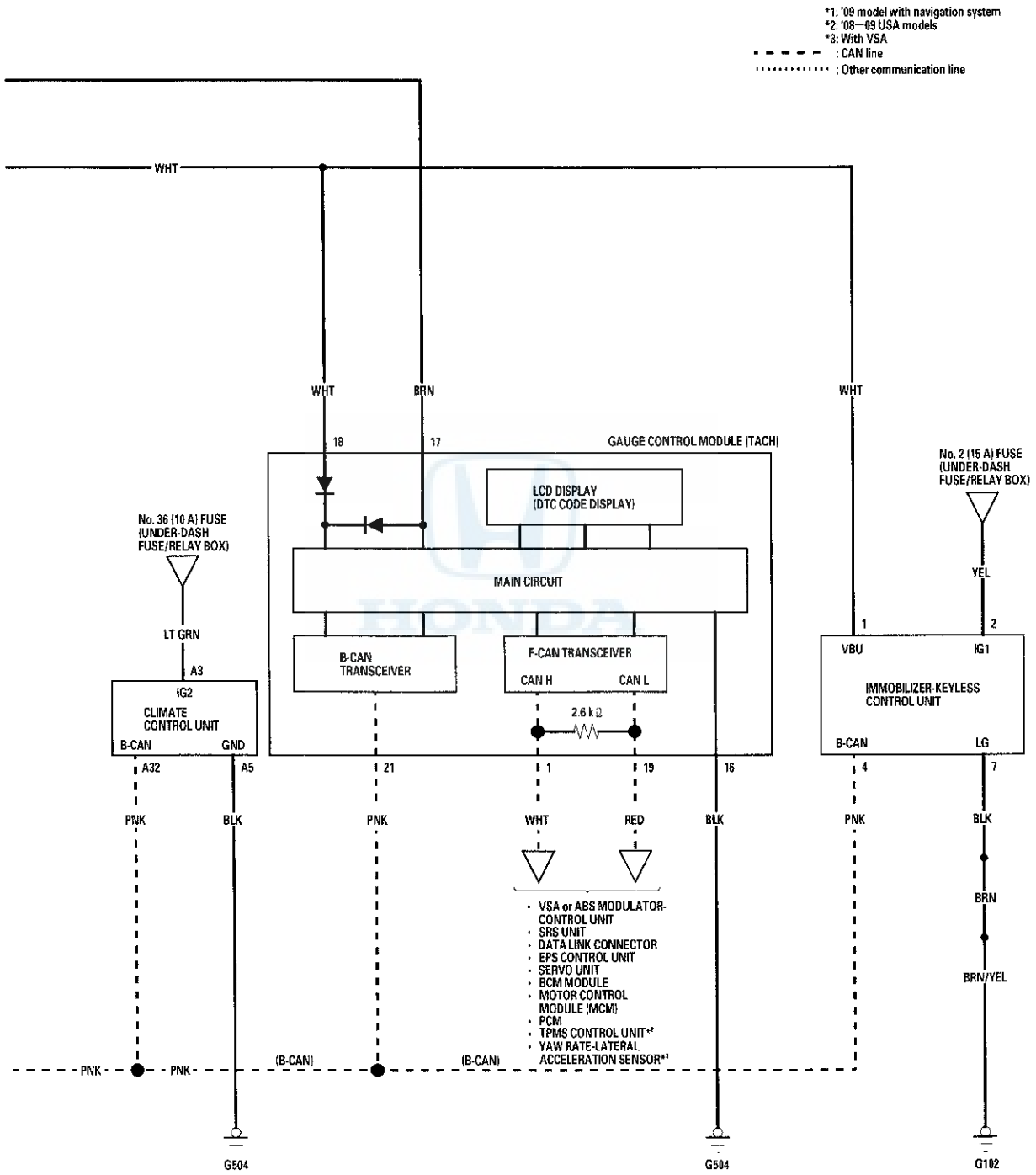
*1: '09 model with navigation system
*2: '08—09 USA models
*3: With VSA
: CAN line
: Other communication line
WHT
WHT
BRN
WHT
18
17
GAUGE CONTROL MODULE (TACH)
LCD DISPLAY
(DTC CODE DISPLAY)
MAIN CIRCUIT
B-CAN
TRANSCEIVER
F-CAN TRANSCEIVER
CAN H
CAN L
2.6 kΩ
No. 36 (10 A) FUSE
(UNDER-DASH
FUSE/RELAY BOX)
LT GRN
A3
IG2
CLIMATE
CONTROL UNIT
B-CAN
GND
A32
A5
No. 2 (15 A) FUSE
(UNDER-DASH
FUSE/RELAY BOX)
YEL
1
2
VBU
IG1
IMMOBILIZER-KEYLESS
CONTROL UNIT
B-CAN
LG
4
7
21
1
19
16
PNK
BLK
PNK
WHT
RED
BLK
PNK
BLK
BRN
BRN/YEL
• VSA or ABS MODULATOR-CONTROL UNIT
• SRS UNIT
• DATA LINK CONNECTOR
• EPS CONTROL UNIT
• SERVO UNIT
• BCM MODULE
• MOTOR CONTROL MODULE (MCM)
• PCM
• TPMS CONTROL UNIT*2
• YAW RATE-LATERAL ACCELERATION SENSOR*3
PNK
PNK
(B-CAN)
(B-CAN)
G504
G504
G102

DTC Troubleshooting

DTC B1000: Communication Bus Line Error (BUS-OFF)

NOTE: If you are trobleshooting multiple DTCs, be sure to follow the instructions in B-CAN System Diagnosis Test Mode A (see page 22-89).

1. Clear the DTCs with the HDS.
2. Turn the ignition switch to LOCK (0), and then back to ON (II).
3. Wait for 6 seconds or more.
4. Check for DTCs with the HDS.

   Is DTC B1000 indicated?

   YES—Go to step 5.

   NO—Intermittent failure, the communication bus line is OK at this time. Check for loose or poor connections, or worn/shorted wires. If the connections are good, check the battery condition (see page 22-61) and the charging system. ■

5. Check for DTCs with the HDS.

   Are DTCs B1008, B1011, and B1032 also indicated?

   YES—Go to step 6.

   NO—Faulty MICU; replace the under-dash fuse/relay box (see page 22-60). ■

6. Turn the ignition switch to LOCK (0).
7. Disconnect the appropriate connector at each control unit in the table one at a time. Clear the DTC, then recheck for DTCs after each unit is disconnected.

Control Unit	Connector
Gauge control module (tach)	36P connector
Immobilizer-keyless control unit	7P connector
HandsFreeLink control unit	28P connector
Climate control unit	32P connector

Is DTC B1000 indicated with each individual unit disconnected?

YES—Go to step 8.

NO—Check the power and grounds to the control unit that was disconnected when B1000 did not reset. If OK, replace the control unit. ■

8. Disconnect all the appropriate connectors for each of the units in the table.

Control Unit	Appropriate Connector
Gauge control module (tach)	36P connector
Immobilizer-keyless control unit	7P connector
HandsFreeLink control unit	28P connector
Climate control unit	32P connector

9. Disconnect under-dash fuse/relay box connector Q (16P).

10. Check for continuity between under-dash fuse/relay box connector Q (16P) terminal No. 6 and body ground.

UNDER-DASH FUSE/RELAY BOX CONNECTOR Q (16P)

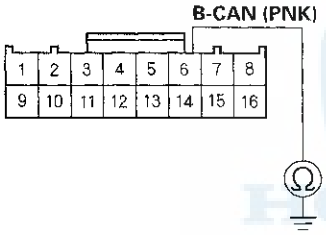

Wire side of female terminals

Is there continuity?

YES—Repair a short to ground in the wire between the under-dash fuse/relay box and the affected control unit.■

NO—Go to step 11.

11. Measure the voltage between under-dash fuse/relay box connector Q (16P) terminal No. 6 and body ground.

UNDER-DASH FUSE/RELAY BOX CONNECTOR Q (16P)

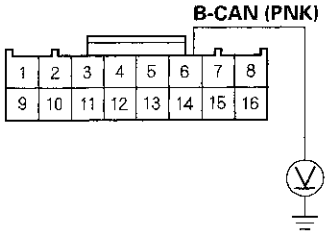

Wire side of female terminals

Is there less than 0.1 V?

YES—Replace the under-dash fuse/relay box (see page 22-60).■

NO—Repair a short to power in the wire between the under-dash fuse/relay box and the affected control unit.■

DTC Troubleshooting (cont'd)

DTC B1001: MICU (CPU) Error ('06-08 models)

NOTE: If you are troubleshooting multiple DTCs, be sure to follow the instructions in B-CAN System Diagnosis Test Mode A (see page 22-89).

1. Clear the DTCs with the HDS.
2. Turn the ignition switch to LOCK (0), and then back to ON (II).
3. Wait for 6 seconds or more.
4. Check for DTCs with the HDS.

   Is DTC B1001 indicated?

   YES—Faulty MICU; replace the under-dash fuse/relay box (see page 22-60). ■

   NO—Intermittent failure, the MICU is OK at this time. Check for loose or poor connections. If the connections are good, check the battery condition (see page 22-61) and the charging system. ■

DTC B1002: MICU (EEPROM) Error

NOTE: If you are troubleshooting multiple DTCs, be sure to follow the instructions in B-CAN System Diagnosis Test Mode A (see page 22-89).

1. Clear the DTCs with the HDS.
2. Turn the ignition switch to LOCK (0), and then back to ON (II).
3. Wait for 6 seconds or more.
4. Check for DTCs with the HDS.

   Is DTC B1002 indicated?

   YES—Faulty MICU; replace the under-dash fuse/relay box (see page 22-60). ■

   NO—Intermittent failure, the MICU is OK at this time. Check for loose or poor connections. If the connections are good, check the battery condition (see page 22-61) and the charging system. ■

DTC B1008: MICU Lost Communication with Gauge Control Module (A/T Message)

NOTE: If you are troubleshooting multiple DTCs, be sure to follow the instructions in B-CAN System Diagnosis Test Mode A (see page 22-89).

1. Clear the DTCs with the HDS.
2. Turn the ignition switch to LOCK (0), and then back to ON (II).
3. Wait for 6 seconds or more.
4. Check for DTCs with the HDS.

   Is DTC B1008 indicated?

   YES—Go to step 5.

   NO—Intermittent failure, the gauge control module is OK at this time. Check for loose or poor connections at the gauge control module (tach) 36P connector and at under-dash fuse/relay box connector Q (16P). If the connections are good, check the battery condition (see page 22-61) and the charging system. ■

5. Check for DTCs with the HDS.

   Are DTCs B1011 and B1032 also indicated with DTC B1008?

   YES—Check for an open in the communication circuit between the MICU and the gauge control module (tach). If the circuit is bad, repair the open. ■

   NO—Go to the gauge control module (tach) input test (see page 22-248). ■

DTC B1011: MICU Lost Communication with Gauge Control Module (VSP/NE Message)

NOTE: If you are troubleshooting multiple DTCs, be sure to follow the instructions in B-CAN System Diagnosis Test Mode A (see page 22-89).

1. Clear the DTCs with the HDS.
2. Turn the ignition switch to LOCK (0), and then back to ON (II).
3. Wait for 6 seconds or more.
4. Check for DTCs with the HDS.

   Is DTC B1011 indicated?

   YES—Go to step 5.

   NO—Intermittent failure, the gauge control module is OK at this time. Check for loose or poor connections at the gauge control module (tach) 36P connector and at under-dash fuse/relay box connector Q (16P). If the connections are good, check the battery condition (see page 22-61) and the charging system. ■

5. Check for DTCs with the HDS.

   Are DTCs B1008 and B1032 also indicated with DTC B1011?

   YES—Check for an open in the communication circuit between the MICU and the gauge control module (tach). If the circuit is bad, repair the open. ■

   NO—Go to the gauge control module (tach) input test (see page 22-248). ■

DTC Troubleshooting (cont'd)

DTC B1032: MICU Lost Communication with SRS Unit (CDS Message)

NOTE: If you are troubleshooting multiple DTCs, be sure to follow the instructions in B-CAN System Diagnosis Test Mode A (see page 22-89).

1. Clear the DTCs with the HDS.
2. Turn the ignition switch to LOCK (0), and then back to ON (II).
3. Wait for 6 seconds or more.
4. Check for DTCs with the HDS.

   Is DTC B1032 indicated?

   YES—Go to step 5.

   NO—Intermittent failure, the gauge control module is OK at this time. Check for loose or poor connections at the gauge control module (tach) 36P connector, and at under-dash fuse/relay box connector Q (16P). If the connections are good, check the battery condition (see page 22-61) and the charging system. ■

5. Check for DTCs with the HDS.

   Are DTCs B1008 and B1011 also indicated with DTC B1032?

   YES—Check for an open in the communication circuit between the MICU and the gauge control module (tach). If the circuit is bad, repair the open. ■

   NO—Do the gauge control module (tach) input test (see page 22-248). ■

DTC B1036: IG1 Line Input Error

NOTE: If you are troubleshooting multiple DTCs, be sure to follow the instructions in B-CAN System Diagnosis Test Mode A (see page 22-89).

1. Clear the DTCs with the HDS.
2. Turn the ignition switch to LOCK (0), and then back to ON (II).
3. Wait for 6 seconds or more.
4. Check for DTCs with the HDS.

   Is DTC B1036 indicated?

   YES—Go to step 5.

   NO—Intermittent failure, the system is OK at this time. Check for loose or poor connection at the gauge control module (tach) 36P connector, and at under-dash fuse/relay box connector Q (16P). If the connections are good, check the battery condition (see page 22-61) and the charging system. ■

5. Check for DTCs with the HDS.

   Is DTC B1008 indicated with DTC B1036?

   YES—Troubleshoot the indicated DTC. ■

   NO—Go to step 6.

6. Turn the ignition switch to LOCK (0).
7. Turn the ignition switch to ON (II).

8. Measure the voltage between gauge control module (tach) 36P connector terminal No. 17 and body ground.

GAUGE CONTROL MODULE (TACH) 36P CONNECTOR

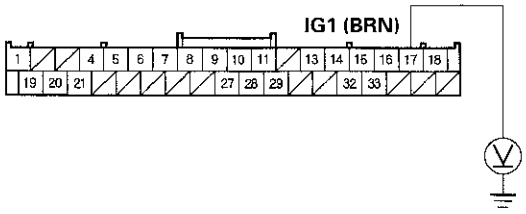

Wire side of female terminals

Is there battery voltage?

YES—Faulty MICU; substitute a known-good under-dash fuse/relay box (see page 22-60), and recheck.■

NO—Check No. 10 (7.5 A) fuse in the under-dash fuse/relay box. If the fuse is OK, check for an open in the wire between the under-dash fuse/relay box and the gauge control module (tach), or repair a short in the wire between the under-dash fuse/relay box and the gauge control module (tach).■

DTC B1150: Communication Bus Line Error (BUS-OFF)

NOTE: If you are troubleshooting multiple DTCs, be sure to follow the instructions in B-CAN System Diagnosis Test Mode A (see page 22-89).

1. Clear the DTCs with the HDS.
2. Turn the ignition switch to LOCK (0), and then back to ON (II).
3. Wait for 6 seconds or more.
4. Check for DTCs with the HDS.

   Are DTCs B1000, B1008, B1011, B1032, and or B1900 also indicated with DTC B1150?

   YES—Troubleshoot DTC B1000 (see page 22-98).■

   NO—If only DTC B1150 is present, replace the gauge control module (tach) assembly. If no DTCs are present, it's an intermittent failure, the system is OK at this time. Check for loose or poor connections at the gauge control module (tach) 36P connector, and at under-dash fuse/relay box connector Q (16P).■

DTC Troubleshooting (cont'd)

DTC B1200: Communication Bus Line Error (BUS-OFF)

NOTE: If you are troubleshooting multiple DTCs, be sure to follow the instructions in B-CAN System Diagnosis Test Mode A (see page 22-89).

1. Clear the DTCs with the HDS.
2. Turn the ignition switch to LOCK (0), and then back to ON (II).
3. Wait for 6 seconds or more.
4. Check for DTCs with the HDS.

   Are DTCs B1000, B1008, B1011, B1032, and or B1900 also indicated with DTC B1200?

   YES—Troubleshoot DTC B1000 (see page 22-98). ■

   NO—If only DTC B1200 is present, replace the climate control unit. If no DTCs are present, it's an intermittent failure, the system is OK at this time. Check for loose or poor connections at the climate control unit 32P connector, and at under-dash fuse/relay box connector Q (16P). ■

DTC B1750: Communication Bus Line Error (BUS-OFF)

NOTE: If you are troubleshooting multiple DTCs, be sure to follow the instructions in B-CAN System Diagnosis Test Mode A (see page 22-89).

1. Clear the DTCs with the HDS.
2. Turn the ignition switch to LOCK (0), and then back to ON (II).
3. Wait for 6 seconds or more.
4. Check for DTCs with the HDS.

   Are DTCs B1000, B1008, B1011, B1032, and or B1900 also indicated with DTC B1750?

   YES—Troubleshoot DTC B1000 (see page 22-98). ■

   NO—If only DTC B1750 is present, replace the HandsFreeLink control unit. If no DTCs are present, it's an intermittent failure, the system is OK at this time. Check for loose or poor connections at the HandsFreeLink control unit 28P connector, and at under-dash fuse/relay box connector Q (16P). ■

DTC B1900: Communication Bus Line Error (BUS-OFF)

NOTE: If you are troubleshooting multiple DTCs, be sure to follow the instructions in B-CAN System Diagnosis Test Mode A (see page 22-89).

1. Clear the DTCs with the HDS.
2. Turn the ignition switch to LOCK (0), and then back to ON (II).
3. Wait for 6 seconds or more.
4. Check for DTCs with the HDS.

   Are DTCs B1000, B1008, B1011, and B1032 also indicated with DTC B1900?

   YES—Troubleshoot DTC B1000 (see page 22-98). ■

   NO—If only DTC B1900 is present, replace the immobilizer-keyless control unit. If no DTCs are present, it's an intermittent failure, the system is OK at this time. Check for loose or poor connections at the immobilizer control unit 7P connector, and at under-dash fuse/relay box connector Q (16P). ■

MICU Input Test

1. Before testing the multiplex integrated control system, troubleshoot the system using B-CAN System Diagnosis Test Mode A (see page 22-89).

2. Check the No. 10 (7.5 A) fuse in the under-dash fuse/relay box. If any fuse is blown, replace it and go to step 3.

3. Disconnect under-dash fuse/relay box connectors E, F, G, K, and T.

   NOTE: All connector views are shown from wire side of female terminals.

UNDER-DASH FUSE/RELAY BOX CONNECTOR E (42P)

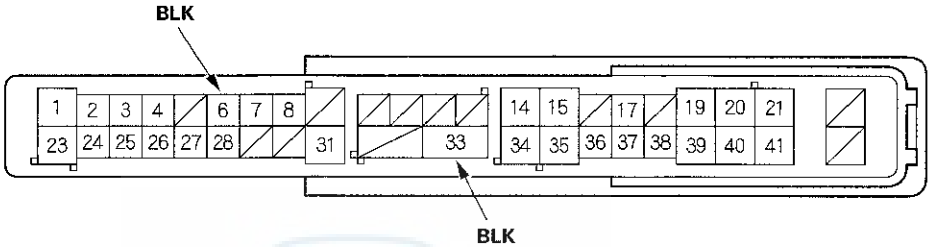

UNDER-DASH FUSE/RELAY BOX CONNECTOR F (34P)

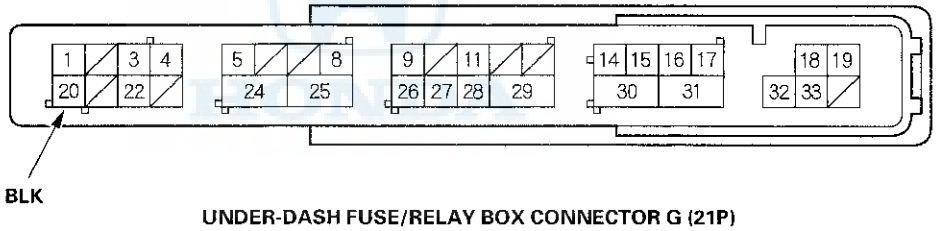

UNDER-DASH FUSE/RELAY BOX CONNECTOR G (21P)

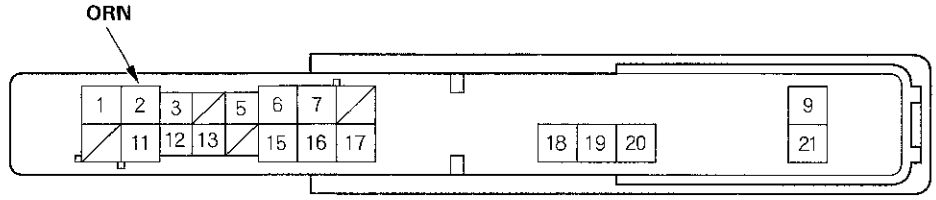

UNDER-DASH FUSE/RELAY BOX CONNECTOR K (8P)

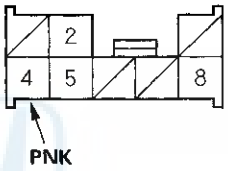

UNDER-DASH FUSE/RELAY BOX CONNECTOR T (34P)

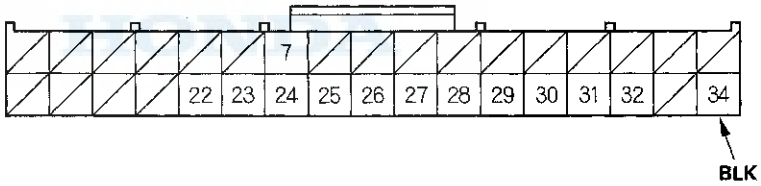

4. Inspect the connector and socket terminals to be sure they are all making good contact.

   - If the terminals are bent, loose or corroded, repair them as necessary, and recheck the system.
   - If the terminals look OK, go to step 5.

MICU Input Test (cont'd)

5. With the connector still disconnected, do these input tests at the following connectors.

   - If any test indicates a problem, find and correct the cause, then recheck the system.
   - If all the input tests prove OK, go to step 6.

Cavity	Wire	Test condition	Test: Desired result	Possible cause if desired result is not obtained
G2	ORN	Under all conditions	Measure the voltage to ground: There should be battery voltage.	• Blown No. 23 (10 A) fuse in the under-hood fuse/relay box • An open in the wire
K4	PNK	Under all conditions	Attach to ground: The ceiling light should come on.	• Blown No. 22 (7.5 A) fuse in the under-hood fuse/relay box • Blown bulb(s) • Faulty ceiling light • An open in the wire

6. Reconnect the connectors to the under-dash fuse/relay box, and do these input tests at the following connectors.

   - If any test indicates a problem, find and correct the cause, then recheck the system.
   - If all the input tests prove OK, the MICU must be faulty; replace the under-dash fuse/relay box.

Cavity	Wire	Test condition	Test: Desired result	Possible cause if desired result is not obtained
E6	BLK	Under all conditions	Measure the voltage to ground: There should be less than 0.5 V.	• Poor ground (G602) • An open in the wire
E33	BLK	Under all conditions	Measure the voltage to ground: There should be less than 0.5 V.	• Poor ground (G601) • An open in the wire
F20	BLK	Under all conditions	Measure the voltage to ground: There should be less than 0.5 V.	• Poor ground (G401) • An open in the wire
T34	BLK	Under all conditions	Measure the voltage to ground: There should be less than 0.5 V.	• Poor ground (G501) • An open in the wire

Component Location Index

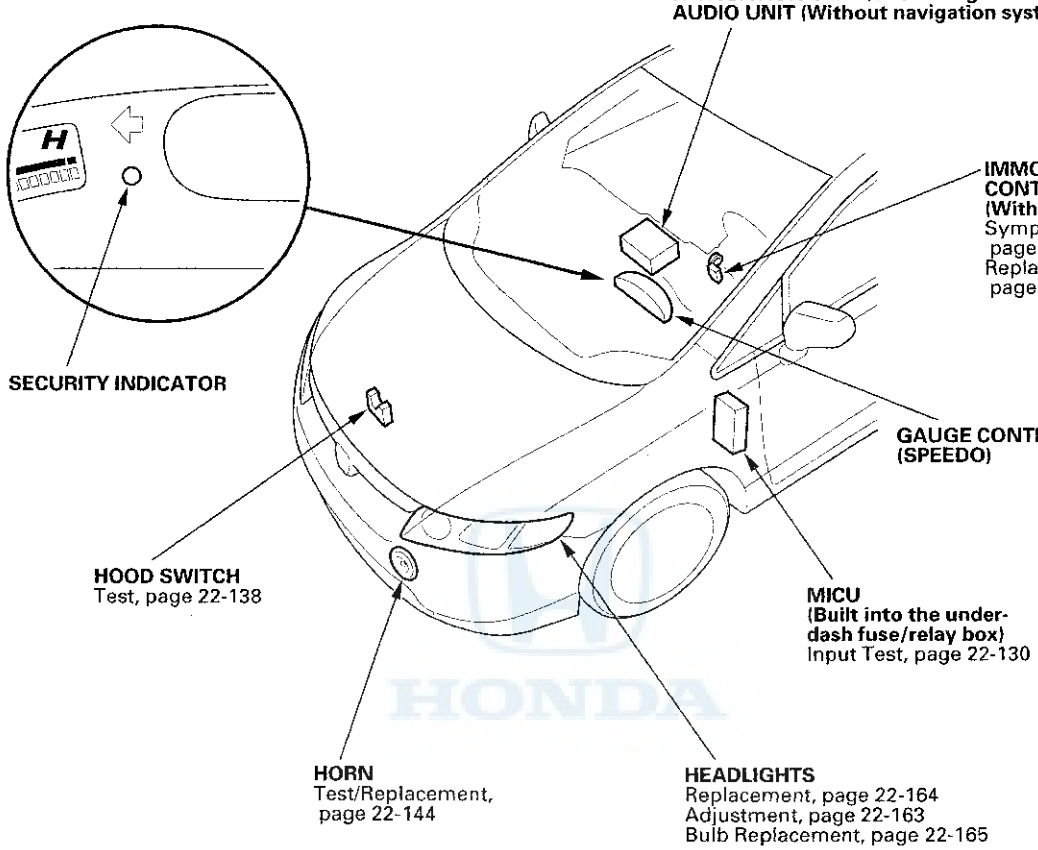

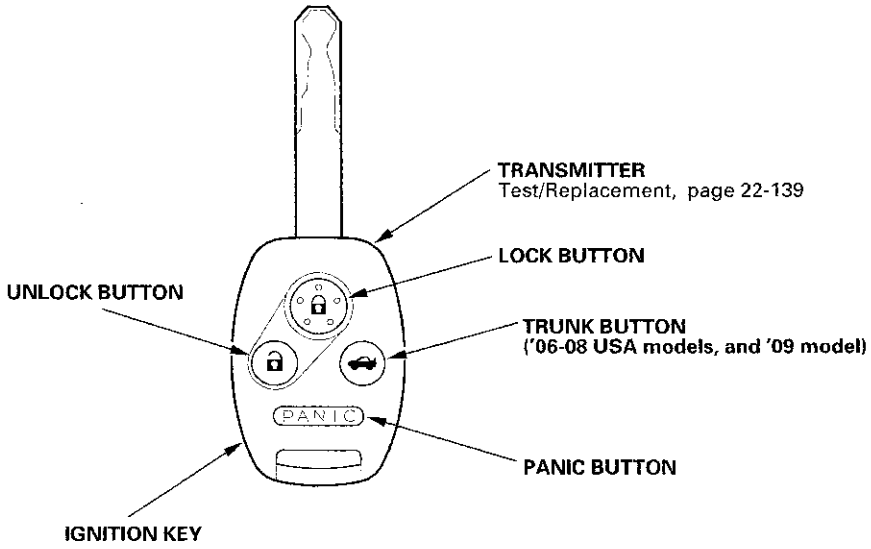

(cont'd)

Component Location Index (cont'd)

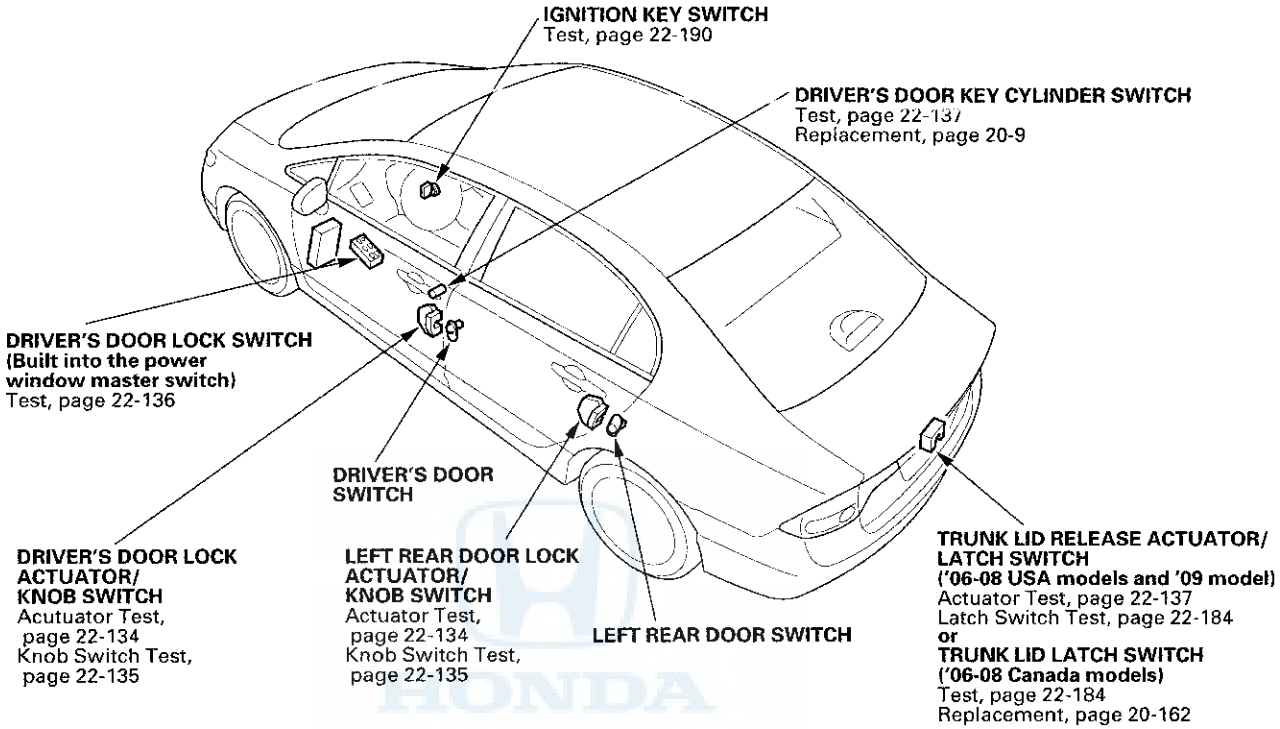

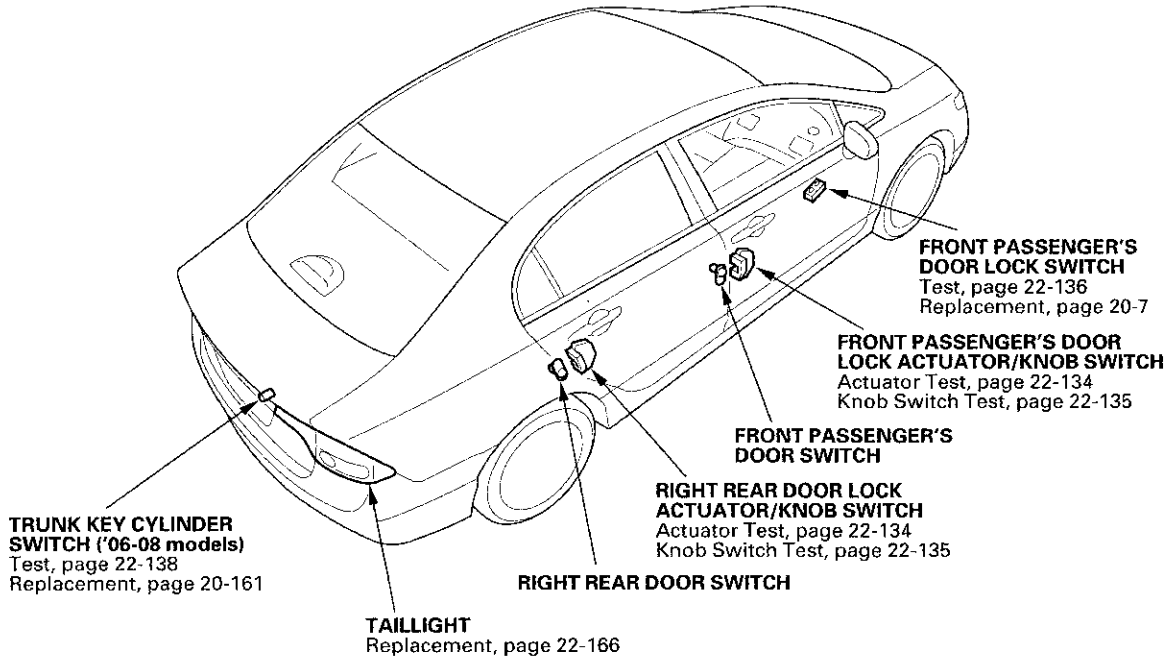

System Description

Security Alarm System

The security alarm system is armed automatically after the doors, hood, and trunk are closed and locked. For the system to arm, the ignition switch must be off, the key must be removed from the ignition switch, and the MICU must receive signals that the doors, hood, and trunk are closed and locked. The alarm can be disarmed at any time by unlocking the driver's door with the key or pressing the UNLOCK button on the transmitter.

When everything is closed and locked, the only inputs that are grounded, and have 0 V, are the driver's door lock knob switch (LOCK position), and the audio unit or navigation unit (if equipped). In other words, all of the other switches are open, and have about 10 to 12 V, including the key cylinder switches. The security indicator in the gauge control module (speedo) begins to flash immediately after the vehicle is completely closed and locked, and 15 seconds later, the security system arms. If the security indicator does not flash, the system is not arming. A beep sounds and the parking lights flash to confirm the security alarm system is armed if the LOCK button is pressed a second time within 5 seconds.

If one of the switches is misadjusted or shorted internally, or there is a short in the circuit, the security system will not arm. As long as the control unit continues to receive a ground signal (0 V), it senses that the vehicle is not closed and locked, and the system will not arm. A switch that is slightly misadjusted can cause the alarm to sound for no apparent reason. In this case, a significant change in outside air temperature, the vibration of a passing truck, or someone bumping into the vehicle could cause the alarm to sound. There is no glass breakage or motion detector feature.

If anything is opened or improperly unlocked after the system is armed, the control unit receives a ground signal from that switch, and the 10 to 12 V reference drops to 0 V. If the audio unit or navigation unit (if equipped) is disconnected, the input loses its ground, and the input voltage goes to 10 to 12 V. The system sounds the alarm when any of these occur:

- A door or the trunk is forced open.
- A door is unlocked without using the key or the transmitter.
- The hood is opened.
- The audio unit or navigation unit (if equipped) is disconnected.
- The transmitter PANIC button is pressed.

When the system sounds the alarm, the horn sounds and the exterior lights flash for 2 minutes. The alarm can be stopped at any time by unlocking the driver's door with the key or by pressing any button on the transmitter.

Panic Mode

The panic mode sounds the alarm in order to attract attention. When the PANIC button on the transmitter is pressed and held for 2 seconds, the horn sounds and the exterior lights flash for about 20 seconds.

The panic mode can be cancelled at anytime by pressing any button on the transmitter or by turning the ignition switch to ON (II). The panic mode will not function if the ignition switch is to ON (II).

(cont'd)

System Description (cont'd)

Keyless Entry System

The keyless entry system is integrated with the multiplex integrated control system. The multiplex integrated control unit (MICU) receives LOCK, UNLOCK and PANIC signals from the immobilizer-keyless control unit (keyless receiver).

The keyless entry system allows you to lock and unlock the vehicle with the transmitter. When you press the LOCK button, all doors lock. When you press the UNLOCK button once, only the driver's door unlocks. The other doors will unlock when you press the button a second time. The doors will not lock with the transmitter if a door is not fully closed, or if the key is in the ignition switch.

NOTE: Using the custom setting in the HDS, the functionality of the system can be changed so that all the doors unlock with the first press of the transmitter UNLOCK button.

When the switch for the ceiling light is in the center (DOOR) position, it will come on when the UNLOCK button is pressed. If a door is not opened, the light will go off in about 30 seconds, and the doors will relock. If the doors are locked with the transmitter within 30 seconds, the light will go off immediately.

HONDA

HONDA

Circuit Diagram

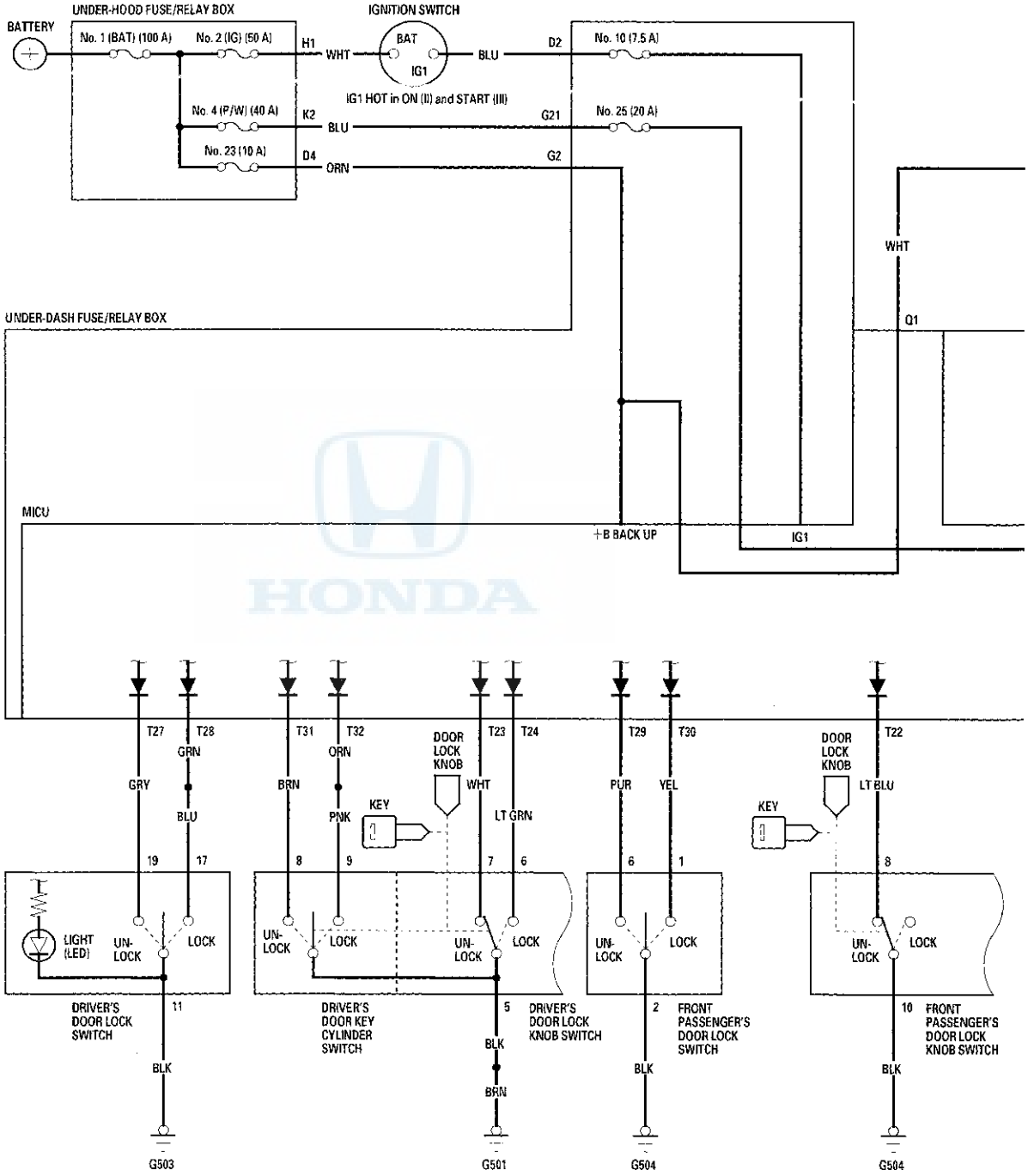

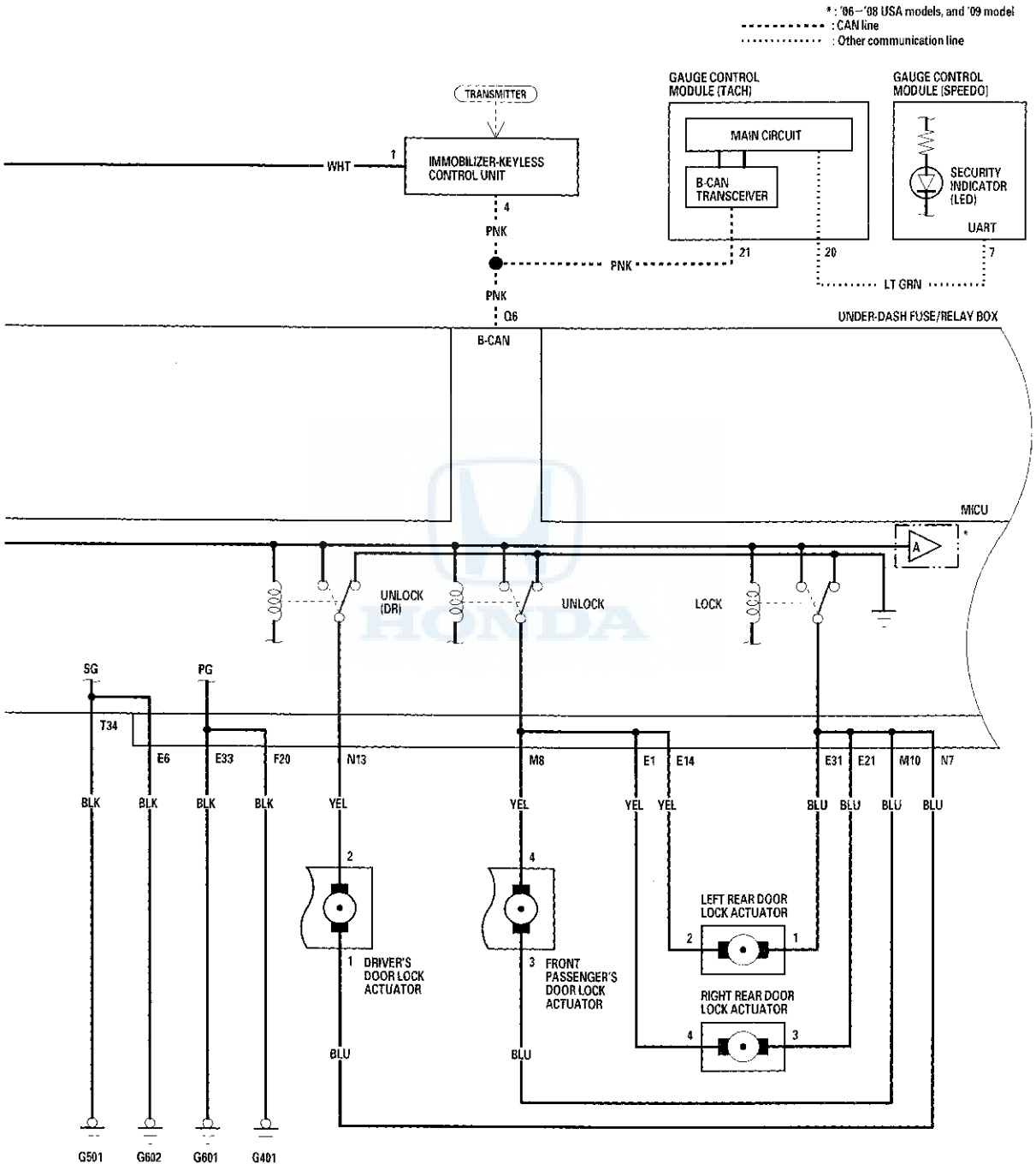
* : '06–'08 USA models, and '09 model
: CAN line
: Other communication line
TRANSMITTER
GAUGE CONTROL MODULE (TACH)
GAUGE CONTROL MODULE (SPEEDO)
MAIN CIRCUIT
B-CAN TRANSCEIVER
SECURITY INDICATOR (LED)
UART
WHT
1
IMMOBILIZER-KEYLESS CONTROL UNIT
4
PNK
PNK
21
20
7
LT GRN
PNK
Q6
B-CAN
UNDER-DASH FUSE/RELAY BOX
MICU
A
UNLOCK (DR)
UNLOCK
LOCK
SG
PG
T34
E6
E33
F20
N13
M8
E1
E14
E31
E21
M10
N7
BLK
BLK
BLK
BLK
YEL
YEL
YEL
YEL
BLU
BLU
BLU
BLU
2
4
LEFT REAR DOOR LOCK ACTUATOR
2
1
1 DRIVER'S DOOR LOCK ACTUATOR
3 FRONT PASSENGER'S DOOR LOCK ACTUATOR
RIGHT REAR DOOR LOCK ACTUATOR
4
3
BLU
BLU
G501
G602
G601
G401

(cont'd)

Circuit Diagram (cont'd)

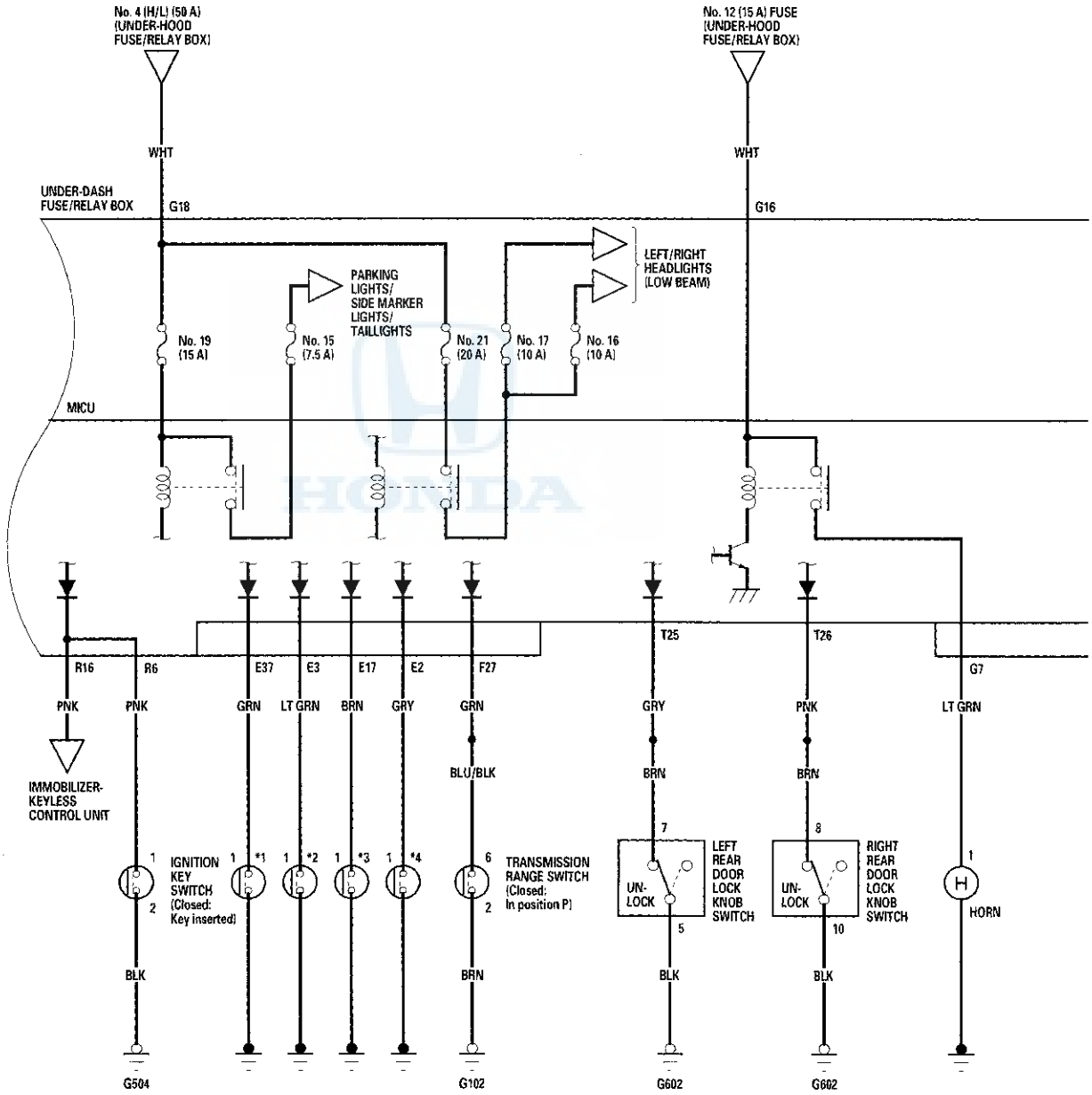

*1: DRIVER'S DOOR SWITCH (Closed: Door open)
*2: FRONT PASSENGER'S DOOR SWITCH (Closed: Door open)
*3: LEFT REAR DOOR SWITCH (Closed: Door open)
*4: RIGHT REAR DOOR SWITCH (Closed: Door open)

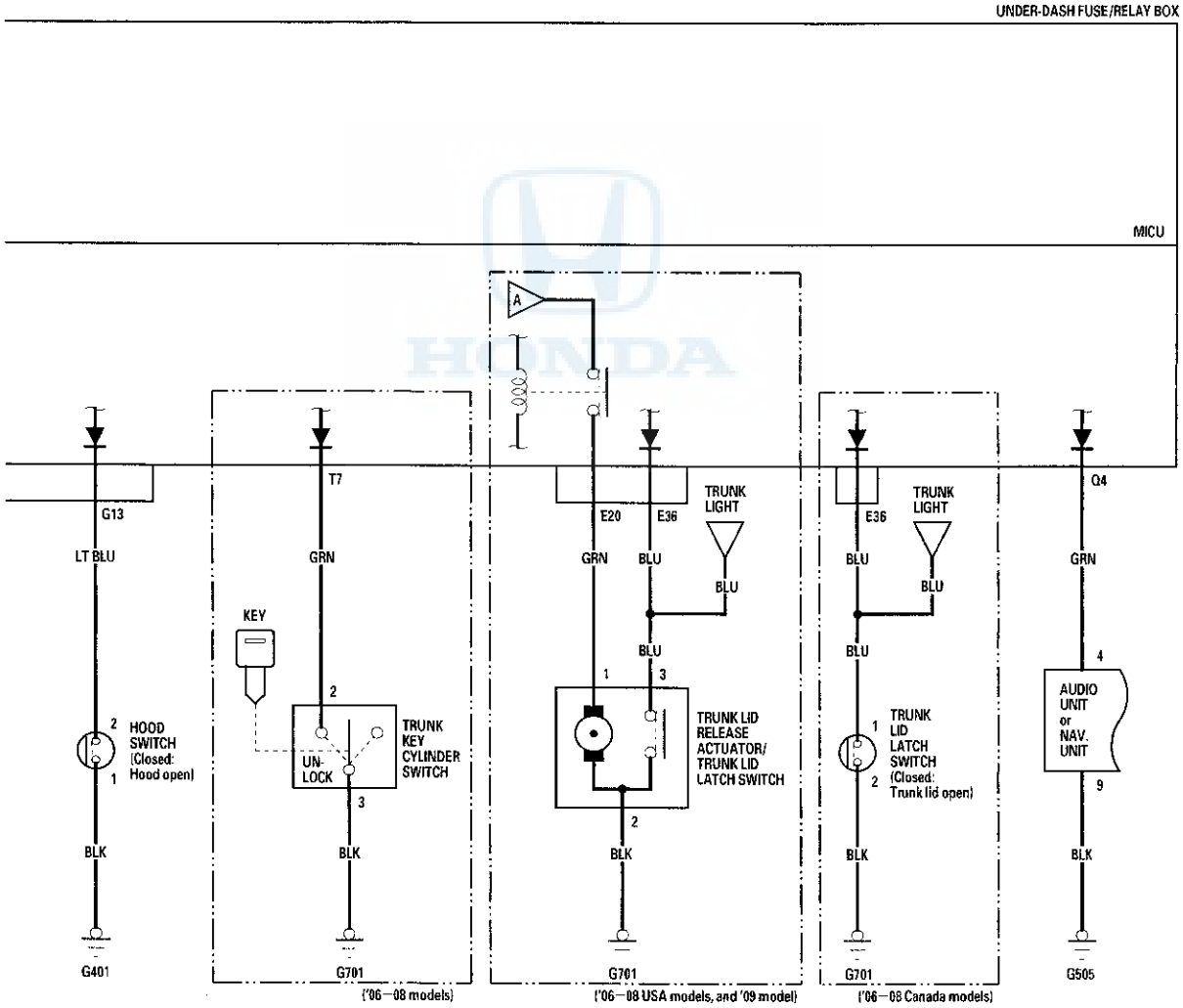

DTC Troubleshooting

DTC B1026: Front Passenger's Door Lock Switch Signal Error (LOCK/UNLOCK)

NOTE: If you are troubleshooting multiple DTCs, be sure to follow the instructions in B-CAN System Diagnosis Test Mode A (see page 22-89).

1. Clear the DTCs with the HDS.
2. Turn the ignition switch to LOCK (0), and then back to ON (II).
3. Operate the front passenger's door lock switch several times.
4. Check for DTCs with the HDS.

   Is DTC B1026 indicated?

   YES—Go to step 5.

   NO—Intermittent failure. The front passenger's door lock system is OK at this time. ■

5. With the front passenger's door lock switch in the neutral position, select SECURITY from the HDS and enter the DATA LIST.
6. Check the ON/OFF information of the FRONT PASSENGER'S DOOR LOCK SWITCH (LOCK) and FRONT PASSENGER'S DOOR LOCK SWITCH (UNLOCK) in the DATA LIST.

   Are both information indicators OFF?

   YES—Go to step 12.

   NO—Go to step 7.

7. Disconnect the front passenger's power window switch 8P connector.
8. Check the ON/OFF information of the FRONT PASSENGER'S DOOR LOCK SWITCH (LOCK) and FRONT PASSENGER'S DOOR LOCK SWITCH (UNLOCK) in the DATA LIST.

   Are both information indicators OFF?

   YES—Faulty door lock switch; replace the front passenger's power window switch (see page 22-202). ■

   NO—Go to step 9.

9. Turn the ignition switch to LOCK (0).
10. Disconnect under-dash fuse/relay box connector T (34P).
11. Check for continuity between front passenger's power window switch 8P connector terminals No. 1 (UNLOCK) and No. 6 (LOCK), and body ground.

FRONT PASSENGER'S POWER WINDOW SWITCH 8P CONNECTOR

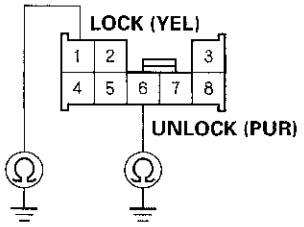

Wire side of female terminals

Is there continuity?

YES—Repair a short in the LOCK or UNLOCK wire. ■

NO—Faulty MICU, replace the under-dash fuse/relay box (see page 22-60). ■

12. Turn the ignition switch to LOCK (0).
13. Disconnect the front passenger's power window switch 8P connector.
14. Disconnect under-dash fuse/relay box connector T (34P).

15. Check for continuity between front passenger's power window switch 8P connector terminals No. 1 (UNLOCK) and No. 6 (LOCK).

FRONT PASSENGER'S POWER WINDOW SWITCH 8P CONNECTOR

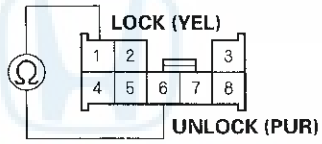

Wire side of female terminals

Is there continuity?

YES—Repair a short in the wire between the LOCK and UNLOCK wires. ■

NO—Substitute a known-good front passenger's power window switch, and recheck. If the symptom/indication goes away, replace the original front passenger's power window switch. If not, the MICU is faulty, replace the under-dash fuse/relay box (see page 22-60). ■

DTC Troubleshooting (cont'd)

DTC B1127: Driver's Door Key Cylinder Switch Signal Error (LOCK/UNLOCK)

NOTE: If you are troubleshooting multiple DTCs, be sure to follow the instructions in B-CAN System Diagnosis Test Mode A (see page 22-89).

1. Clear the DTCs with the HDS.
2. Turn the ignition switch to LOCK (0), and then back to ON (II).
3. Insert the ignition key into the driver's door key cylinder switch, and turn the key in LOCK and UNLOCK positions ten times.
4. Check for DTCs with the HDS.

   Is DTC B1127 indicated?

   YES—Go to step 5.

   NO—Intermittent failure. The driver's door key cylinder switch system is OK at this time. ■

5. With the driver's door key cylinder in the neutral position, select KEYLESS with the HDS, and enter the DATA LIST.
6. Check the ON/OFF information of the DRIVER'S DOOR KEY CYLINDER SWITCH (LOCK) and DRIVER'S DOOR KEY CYLINDER SWITCH (UNLOCK) in the DATA LIST.

   Are both information indicators OFF?

   YES—Go to step 12.

   NO—Go to step 7.

7. Disconnect the driver's door lock actuator 10P connector.
8. Check the ON/OFF information of the DRIVER'S DOOR KEY CYLINDER SWITCH (LOCK) and DRIVER'S DOOR KEY CYLINDER SWITCH (UNLOCK) in the DATA LIST.

   Are both information indicators OFF?

   YES—Faulty driver's door key cylinder switch; replace the driver's door lock actuator. ■

   NO—Go to step 9.

9. Turn the ignition switch to LOCK (0).
10. Disconnect under-dash fuse/relay box connector T (34P).
11. Check for continuity between under-dash fuse/relay box connector T (34P) terminals No. 31 (UNLOCK) and No. 32 (LOCK), and body ground.

UNDER-DASH FUSE/RELAY BOX CONNECTOR T (34P)

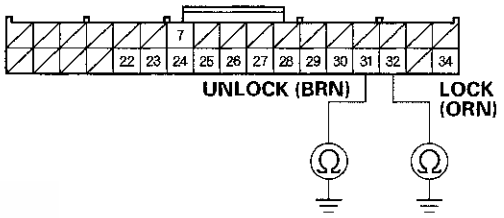

Wire side of female terminals

Are there continuity?

YES—Faulty MICU, replace the under-dash fuse/relay box (see page 22-60). ■

NO—Go to step 12.

12. Turn the ignition switch to LOCK (0).
13. Disconnect the driver's door lock actuator 10P connector.
14. Disconnect under-dash fuse/relay box connector T (34P).

15. Check for continuity between under-dash fuse/relay box connector T (34P) terminals No. 31 (UNLOCK) and No. 32 (LOCK).

UNDER-DASH FUSE/RELAY BOX CONNECTOR T (34P)

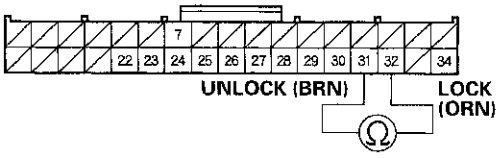

Wire side of female terminals

Is there continuity?

YES—Repair a short in the wire between the LOCK and UNLOCK wires. ■

NO—Substitute a known-good MICU, and recheck. If the symptom/indication goes away, replace the original MICU, if not, replace the driver's door lock actuator. ■

DTC B1128: Driver's Door Lock Switch Signal Error (LOCK/UNLOCK)

NOTE: If you are troubleshooting multiple DTCs, be sure to follow the instructions in B-CAN System Diagnosis Test Mode A (see page 22-89).

1. Clear the DTCs with the HDS.
2. Turn the ignition switch to LOCK (0), and then back to ON (II).
3. Operate the driver's door lock switch LOCK/UNLOCK several times.
4. Check for DTCs with the HDS.

   Is DTC B1128 indicated?

   YES—Go to step 5.

   NO—Intermittent failure. The driver's door lock system is OK at this time. ■

5. With the driver's door lock switch in the neutral position, select SECURITY from the HDS and enter the DATA LIST.
6. Check the ON/OFF information of the DRIVER'S DOOR LOCK SWITCH (LOCK) and DRIVER'S DOOR LOCK SWITCH (UNLOCK) in the DATA LIST.

   Are both information indicators OFF?

   YES—Go to step 12.

   NO—Go to step 7.

7. Disconnect the driver's power window switch 22P connector.

(cont'd)

DTC Troubleshooting (cont'd)

8. Check the ON/OFF information of the DRIVER'S DOOR LOCK SWITCH (LOCK) and DRIVER'S DOOR LOCK SWITCH (UNLOCK) in the DATA LIST.

   Are both information indicators OFF?

   YES—Faulty door lock switch; replace the power window master switch (see page 22-201). ■

   NO—Go to step 9.

9. Turn the ignition switch to LOCK (0).

10. Disconnect the under-dash fuse/relay box connector T (34P).

11. Check for continuity between under-dash fuse/relay box connector T (34P) terminals No. 28 (LOCK) and No. 27 (UNLOCK), and body ground.

UNDER-DASH FUSE/RELAY BOX CONNECTOR T (34P)

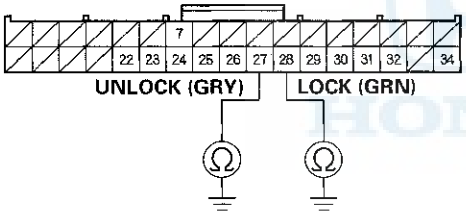

Wire side of female terminals

Is there continuity?

YES—Repair a short in the LOCK or UNLOCK wire. ■

NO—Faulty MICU, replace the under-dash fuse/relay box (see page 22-60). ■

12. Turn the ignition switch to LOCK (0).

13. Disconnect the power window master switch 22P connector.

14. Disconnect under-dash fuse/relay box connector T (34P).

15. Check for continuity between under-dash fuse/relay box connector T (34P) terminals No. 28 (LOCK) and No. 27 (UNLOCK).

UNDER-DASH FUSE/RELAY BOX CONNECTOR T (34P)

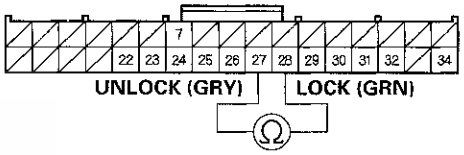

Wire side of female terminals

Is there continuity?

YES—Repair a short in the wire between the LOCK and UNLOCK wires. ■

NO—Substitute a known-good power window master switch, and recheck. If the symptom/indication goes away, replace the original power window master switch. If not, the MICU is faulty, replace the under-dash fuse/relay box (see page 22-60). ■

DTC B1129: Driver's Door Lock Knob Switch Signal Error (LOCK/UNLOCK)

NOTE: If you are troubleshooting multiple DTCs, be sure to follow the instructions in B-CAN System Diagnosis Test Mode A (see page 22-89).

1. Clear the DTCs with the HDS.

2. Turn the ignition switch to LOCK (0), and then back to ON (II).

3. Operate the driver's door lock knob switch several times.

4. Check for DTCs with the HDS.

   Is DTC B1129 indicated?

   YES—Go to step 5.

   NO—Intermittent failure. The system is OK at this time. Check for loose or poor connections. ■

5. Select KEYLESS from the BODY ELECTRICAL menu, and enter the DATA LIST.

6. Check the ON/OFF information of the DRIVER'S DOOR LOCK KNOB SWITCH (LOCK) and the DRIVER'S DOOR LOCK KNOB SWITCH (UNLOCK).

   Is the DRIVER'S DOOR LOCK KNOB the SWITCH (LOCK) information indicator ON and DRIVER'S DOOR LOCK KNOB SWITCH (UNLOCK) information indicator OFF with the driver's door lock knob switch in the LOCK position, and is the DRIVER'S DOOR LOCK KNOB SWITCH (LOCK) information indicator OFF and the DRIVER'S DOOR LOCK KNOB SWITCH (UNLOCK) information indicator ON with the driver's door lock knob switch in the UNLOCK position?

   YES—Faulty MICU, replace the under-dash fuse/relay box (see page 22-60). ■

   NO—Go to step 7.

7. Disconnect the driver's door lock actuator 10P connector.

8. Check the ON/OFF information of the DRIVER'S DOOR LOCK KNOB SWITCH (LOCK) and DRIVER'S DOOR LOCK KNOB SWITCH (UNLOCK) in the DATA LIST.

   Are both information indicators OFF?

   YES—Check for an open in the driver's door lock switch (LOCK) wire or the driver's door lock knob switch (UNLOCK) wire between the MICU and the driver's door lock knob switch. If OK, replace the driver's door lock actuator. ■

   NO—Go to step 9.

9. Turn the ignition switch to LOCK (0).

10. Disconnect under-dash fuse/relay box connector T (34P).

11. Check for continuity between under-dash fuse/relay box connector T (34P) terminals No. 23 (UNLOCK) and No. 24 (LOCK) and body ground.

UNDER-DASH FUSE/RELAY BOX CONNECTOR T (34P)

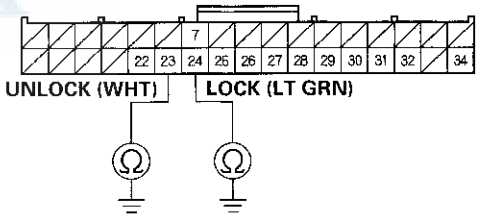

Wire side of female terminals

Is there continuity?

YES—Repair a short to ground in the LOCK or UNLOCK wire. ■

NO—Go to step 12.

(cont'd)

DTC Troubleshooting (cont'd)

12. Check for continuity between under-dash fuse/relay box connector T (34P) terminals No. 23 (UNLOCK) and No. 24 (LOCK).

UNDER-DASH FUSE/RELAY BOX CONNECTOR T (34P)

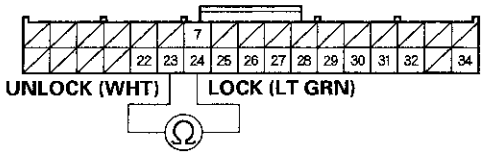

Wire side of female terminals

Is there continuity?

YES—Repair a short in the wire between the LOCK wire and UNLOCK wire. ■

NO—Faulty MICU, replace the under-dash fuse/relay box (see page 22-60). ■

Symptom Troubleshooting

Power Door Locks/Keyless

1. If the door lock system works properly, but the keyless operation does not, refer to the immobilizer-keyless control unit symptom troubleshooting information (see page 22-291).

   NOTE: The door lock system does not function when:
   - Any of the doors is open.
   - Ignition key is in the ignition key switch.
   - Ignition switch is ON (II).

No.	Symptom	Check Items
1	The doors will not lock or unlock.*	• MICU input test (see page 22-130) • Driver's door key cylinder switch test (see page 22-137) • Door lock switch test (see page 22-136) • Door lock knob switch test (see page 22-135) • Keyless remote transmitter test (see page 22-139)
2	The doors will not lock.*	• MICU input test (see page 22-130) • Door lock knob switch test (see page 22-135) • Driver's door switch test (check the door switch ON/OFF information with the HDS) • Keyless remote transmitter test (see page 22-139)
3	The doors will not unlock.*	• MICU input test (see page 22-130) • Door lock knob switch test (see page 22-135) • Keyless remote transmitter test (see page 22-139)
4	Keyless operation does not work (LOCK, UNLOCK, PANIC).	Symptom troubleshooting (see page 22-126).
5	Doors will not unlock with the transmitter, but will unlock with the door switch.	Symptom troubleshooting (see page 22-128).
6	Doors will not lock with the transmitter, but will lock with the door switch.	Symptom troubleshooting (see page 22-128).
7	Doors automatically relock 30, 60, or 90 seconds after being unlocked with the transmitter even though a door has been opened.	Symptom troubleshooting (see page 22-129).
8	The horn does not sound and/or the headlight do not flash when PANIC button on the transmitter pressed ('06-08 USA models, and '09 model).	Symptom troubleshooting (see page 22-128).
9	Keyless operation will work even though the ignition key is in the ignition switch.	Ignition key switch test (see page 22-190).

*: If only one door is not working properly, check that door's lock actuator first, then check the other items listed in this table.

Symptom Troubleshooting (cont'd)

Keyless operation does not work (LOCK, UNLOCK, PANIC)

NOTE:
- Before troubleshooting, check the B-CAN DTCs. If any DTC is indicated, troubleshoot the indicated DTC first.
- Before troubleshooting, do the keyless transmitter test (see page 22-139).

1. Turn the ignition switch to ON (II).
2. Try to start the engine.

   Does the engine start?

   YES—The immobilizer system is OK, go to step 3.

   NO—Go to the immobilizer symptom troubleshooting (see page 22-291).■
3. Turn the ignition switch to LOCK (0).
4. Connect the HDS to the data link connector.
5. Close all doors, then turn the ignition switch to ON (II).
6. Enter the BODY ELECTRICAL menu, and check the door switch parameters.

   Do all door switches indicate OFF?

   YES—Go to step 6.

   NO—Faulty door switch, or shorted door switch wire. Repair as necessary.■
7. Remove the ignition key from the ignition switch.
8. Disconnect the immobilizer-keyless control unit 7P connector.
9. Measure the voltage between immobilizer-keyless control unit 7P connector terminal No. 1 and body ground.

IMMOBILIZER-KEYLESS CONTROL UNIT 7P CONNECTOR

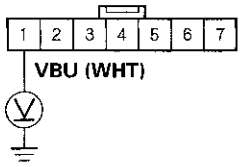

Wire side of female terminals

Is there battery voltage?

YES—Go to step 10.

NO—Check fuse No. 23 (10 A) in the under-hood fuse/relay box. If the fuse is blown, replace the fuse and repair a short to ground in the wire. If the fuse is OK, repair an open in the wire.■

10. Disconnect the ignition key switch 6P connector.
11. At the ignition key switch side, check for continuity between ignition key switch 6P connector terminals No. 1 and No. 2.

IGNITION KEY SWITCH 6P CONNECTOR

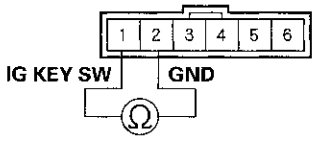

Terminal side of male terminals

Is there continuity?

YES—Faulty ignition key switch, replace the steering lock assembly (see page 17-15).■

NO—Go to step 12.

12. Check for continuity between immobilizer-keyless control unit 7P connector terminal No. 6 and body ground.

IMMOBILIZER-KEYLESS CONTROL UNIT 7P CONNECTOR

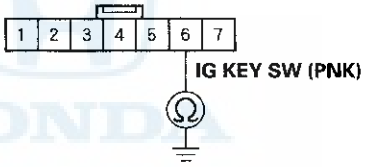

Wire side of female terminals

Is there continuity?

YES—Repair a short to ground in the wire. ■

NO—Replace the immobilizer-keyless control unit (see page 22-302). ■

Symptom Troubleshooting (cont'd)

Doors will not unlock (or lock) with the transmitter, but will unlock (lock) with the door switch

NOTE: Before troubleshooting, check the B-CAN DTCs. If any DTC is indicated, troubleshoot the indicated DTC first.

1. Turn the ignition switch to LOCK (0).
2. Remove the ignition key from the ignition switch.
3. Close and lock the doors.
4. Try to lock/unlock the doors with the keyless transmitter.

   Do the door lock actuators work normally?

   YES—Intermittent failure. The system is OK at this time. ■

   NO—Go to step 5.

5. Open the driver's door.

   Does the key-in reminder chime sound with the key in the ignition switch?

   YES—Faulty ignition key switch, or short to ground on the ignition switch PNK wire. Repair as necessary. ■

   NO—Go to step 6.

6. Do the transmitter test (see page 22-139).

   Is the transmitter OK?

   YES—Substitute a known-good MICU and recheck. ■

   NO—Replace the transmitter (see page 22-139). ■

The horn does not sound and/or the headlights do not flash when the PANIC button on the transmitter is pressed

NOTE: Before troubleshooting, check the B-CAN DTCs. If any DTC is indicated, troubleshoot the indicated DTC first.

1. Press the PANIC button.

   Does the horn sound?

   YES—Go to step 3.

   NO—Go to step 2.

2. Press the horn button.

   Does the horn sound?

   YES—Go to step 3.

   NO—Check the horn circuit. ■

3. Turn the headlight switch ON.

   Do the headlights come on?

   YES—Go to step 4.

   NO—Check the lighting circuit. ■

4. Do the transmitter test (see page 22-139).

   Is the transmitter OK?

   YES—Substitute a known-good MICU and recheck. ■

   NO—Replace the transmitter (see page 22-139). ■

Doors automatically relock 30, 60, or 90 seconds after being unlocked with the transmitter even though a door has been opened

1. Turn the ceiling light switch in DOOR position.
2. Turn the ignition switch to ON (II).
3. Close all doors.
4. Open and close each door one at a time.
5. Watch the ceiling light and the door indicator on the gauge control module.

   Do the ceiling light and door indicator come on when the door is open, and go off when the door is closed?

   YES—Substitute a known-good MICU and recheck. If the symptom goes away, replace the original MICU (see page 22-60). ■

   NO—Repair an open in the wire between the MICU and the door switch. If the wire is OK, faulty the door switch, replace the door lock actuator assembly. ■

Tripped Sensor History

The security system stores information on the last tripped sensor if the security system has been violated. The information can be retrieved using the HDS.

To retrieve the last tripped sensor data:

1. Select HISTORY DATA from the security system test mode menu.
2. Select CURRENT DATA.
3. Confirm that the VIN matches the Vehicle then press the enter button.
4. Scroll through the data list.
   - Sensors that were violated will indicate DETECT.
   - Sensors that were not violated will indicate NONE.
5. Inspect the DETECT circuit for:
   - Misadjusted or damaged switch.
   - Loose or corroded connections.
   - Intermittent short to ground.

HONDA

MICU Input Test

1. Before testing the keyless/power door locks/security system, troubleshoot the system using B-CAN System Diagnosis Test Mode A (see page 22-89).

2. Check the No. 10 (7.5 A) and No. 25 (20 A) fuses in the under-dash fuse/relay box. If any fuse is blown, replace it and go to step 3.

3. Disconnect under-dash fuse/relay box connectors E, F, G, M, N, Q, R, and T.

   NOTE: All connector views are shown from wire side of female terminals.

UNDER-DASH FUSE/RELAY BOX CONNECTOR E (42P)

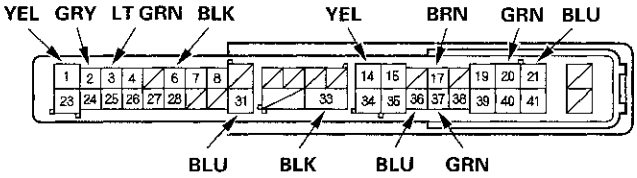

UNDER-DASH FUSE/RELAY BOX CONNECTOR F (34P)

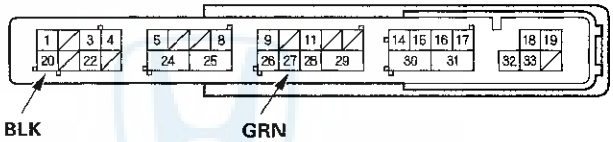

UNDER-DASH FUSE/RELAY BOX CONNECTOR G (21P)

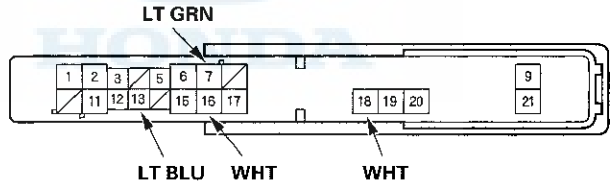

UNDER-DASH FUSE/RELAY BOX CONNECTOR M (10P)

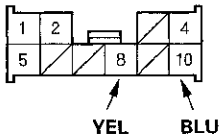

UNDER-DASH FUSE/RELAY BOX CONNECTOR N (14P)

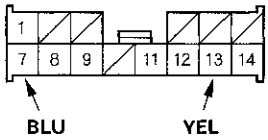

UNDER-DASH FUSE/RELAY BOX CONNECTOR Q (16P)

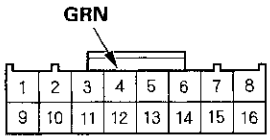

UNDER-DASH FUSE/RELAY BOX CONNECTOR R (20P)

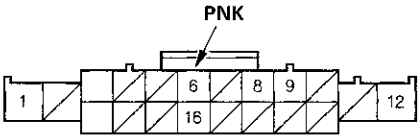

UNDER-DASH FUSE/RELAY BOX CONNECTOR T (34P)

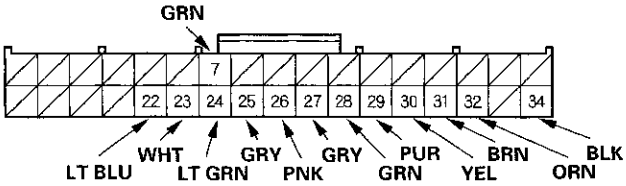

4. Inspect the connector and socket terminals to be sure they are all making good contact.

   - If the terminals are bent, loose or corroded, repair them as necessary and recheck the system.
   - If the terminals look OK, go to step 5.

5. With the connector still disconnected, do these input tests at the following connectors.

   - If any test indicates a problem, find and correct the cause, then recheck the system.
   - If all the input tests prove OK, go to step 6.

Cavity	Wire	Test condition	Test: Desired result	Possible cause if desired result is not obtained
G16	WHT	Under all conditions	Measure the voltage to ground: There should be battery voltage.	• Blown No. 12 (15 A) fuse in the under-hood fuse/relay box • An open in the wire
G18	WHT	Under all conditions	Measure the voltage to ground: There should be battery voltage.	• Blown No. 4 (50 A) fuse in the under-hood fuse/relay box • An open in the wire
G7	LT GRN	Under all conditions	Connect terminals G16 and G7 with a jumper wire momentarily: The horn should sound.	• Poor ground (body ground) • Blown No. 12 (15 A) fuse in the under-hood fuse/relay box • Faulty horn • An open in the wire
E20	GRN	Under all conditions	Connect terminals G2 and E20 with a jumper wire: The trunk release actuator should work (Trunk lid should open).	• Poor ground (G701) • Faulty trunk release actuator • An open in the wire
N7 N13	BLU YEL	Under all conditions	Connect battery power to terminal N13 and ground terminal N7 momentarily: The driver's door lock actuator should unlock.	• Faulty driver's door lock actuator • An open in the wire
M8 M10	YEL BLU	Under all conditions	Connect battery power to terminal M8 and ground terminal M10 momentarily: The front passenger's door lock actuator should unlock.	• Faulty front passenger's door lock actuator • An open in the wire
E1 E21	YEL BLU	Under all conditions	Connect battery power to terminal E1 and ground terminal E21 momentarily: The right rear door lock actuator should unlock.	• Faulty right rear door lock actuator • An open in the wire
E14 E31	YEL BLU	Under all conditions	Connect battery power to terminal E14 and ground terminal E31 momentarily: The left rear door lock actuator should unlock.	• Faulty left rear door lock actuator • An open in the wire

(cont'd)

MICU Input Test (cont'd)

6. Reconnect the connectors to the under-dash fuse/relay box, and do these input tests at the following connectors.

- If any test indicates a problem, find and correct the cause, then recheck the system.
- If all the input tests prove OK, the MICU must be faulty; replace the under-dash fuse/relay box.

Cavity	Wire	Test condition	Test: Desired result	Possible cause if desired result is not obtained
E6	BLK	Under all conditions	Measure the voltage to ground: There should be less than 0.5 V.	• Poor ground (G602) • An open in the wire
E33	BLK	Under all conditions	Measure the voltage to ground: There should be less than 0.5 V.	• Poor ground (G601) • An open in the wire
F20	BLK	Under all conditions	Measure the voltage to ground: There should be less than 0.5 V.	• Poor ground (G401) • An open in the wire
T34	BLK	Under all conditions	Measure the voltage to ground: There should be less than 0.5 V.	• Poor ground (G501) • An open in the wire
E2	GRY	Right rear door open	Measure the voltage to ground: There should be less than 1 V.	• Faulty right rear door switch • An open in the wire
		Right rear door closed	Measure the voltage to ground: There should be more than 5 V.	• Faulty right rear door switch • A short to ground in the wire
E3	LT GRN	Front passenger's door open	Measure the voltage to ground: There should be less than 1 V.	• Faulty front passenger's door switch • An open in the wire
		Front passenger's door closed	Measure the voltage to ground: There should be more than 5 V.	• Faulty front passenger's door switch • A short to ground in the wire
E17	BRN	Left rear door open	Measure the voltage to ground: There should be less than 1 V.	• Faulty left rear door switch • An open in the wire
		Left rear door closed	Measure the voltage to ground: There should be more than 5 V.	• Faulty left rear door switch • A short to ground in the wire
E36	BLU	Trunk lid open	Measure the voltage to ground: There should be less than 1 V.	• Poor ground (G701) • Faulty trunk lid latch switch • An open in the wire
		Trunk lid closed	Measure the voltage to ground: There should be more than 5 V.	• Faulty trunk lid latch switch • A short to ground in the wire
E37	GRN	Driver's door open	Measure the voltage to ground: There should be less than 1 V.	• Faulty driver's door switch • An open in the wire
		Driver's door closed	Measure the voltage to ground: There should be more than 5 V.	• Faulty driver's door switch • A short to ground in the wire
F27	GRN	Transmission range switch in P	Measure the voltage to ground: There should be less than 1 V.	• Poor ground (G102) • Faulty transmission range switch • An open in the wire
		Transmission range switch in any other position than P	Measure the voltage to ground: There should be more than 5 V.	• Faulty transmission range switch • A short to ground in the wire
G13	LT BLU	Hood open	Measure the voltage to ground: There should be less than 1 V.	• Poor ground (G401) • Faulty hood switch • An open in the wire
		Hood closed	Measure the voltage to ground: There should be more than 5 V.	• Faulty hood switch • A short to ground in the wire
Q4	GRN	Under all conditions	Measure the voltage to ground: There should be battery voltage.	• An open in the wire • Faulty audio unit or navigation unit
R6	PNK	Ignition key inserted into the ignition switch	Measure the voltage to ground: There should be less than 1 V.	• Poor ground (G504) • Faulty ignition key switch • An open in the wire
		Ignition switch to LOCK (0) and ignition key removed from the ignition switch	Measure the voltage to ground: There should be more than 5 V.	• Faulty ignition key switch • A short to ground in the wire
T7*	GRN	Trunk key cylinder switch unlocked	Measure the voltage to ground: There should be less than 1 V.	• Poor ground (G701) • Faulty trunk key cylinder switch • An open in the wire
		Trunk key cylinder switch neutral	Measure the voltage to ground: There should be more than 5 V.	• Faulty trunk key cylinder switch • A short to ground in the wire
T22	LT BLU	Front passenger's door lock knob switch unlocked	Measure the voltage to ground: There should be less than 1 V.	• Poor ground (G504) • Faulty front passenger's door lock knob switch • An open in the wire
		Front passenger's door lock knob switch locked	Measure the voltage to ground: There should be more than 5 V.	• Faulty front passenger's door lock knob switch • A short to ground in the wire

*: '06-08 models

Cavity	Wire	Test condition	Test: Desired result	Possible cause if desired result is not obtained
T23	WHT	Driver's door lock knob switch unlocked	Measure the voltage to ground: There should be less than 1 V.	• Poor ground (G501) • Faulty driver's door lock knob switch • An open in the wire
		Driver's door lock knob switch locked	Measure the voltage to ground: There should be more than 5 V.	• Faulty driver's door lock knob switch • A short to ground in the wire
T24	LT GRN	Driver's door lock knob switch unlocked	Measure the voltage to ground: There should be more than 5 V.	• Faulty driver's door lock knob switch • A short to ground in the wire
		Driver's door lock knob switch locked	Measure the voltage to ground: There should be less than 1 V.	• Poor ground (G501) • Faulty driver's door lock knob switch • An open in the wire
T25	GRY	Left rear door lock knob switch unlocked	Measure the voltage to ground: There should be less than 1 V.	• Poor ground (G602) • Faulty left rear door lock knob switch • An open in the wire
		Left rear door lock knob switch locked	Measure the voltage to ground: There should be more than 5 V.	• Faulty left rear door lock knob switch • A short to ground in the wire
T26	PNK	Right rear door lock knob switch unlocked	Measure the voltage to ground: There should be less than 1 V.	• Poor ground (G602) • Faulty right rear door lock knob switch • An open in the wire
		Right rear door lock knob switch locked	Measure the voltage to ground: There should be more than 5 V.	• Faulty right rear door lock knob switch • A short to ground in the wire
T27	GRY	Driver's door lock switch unlocked	Measure the voltage to ground: There should be less than 1 V.	• Poor ground (G503) • Faulty driver's door lock switch • An open in the wire
		Driver's door lock switch in neutral or locked	Measure the voltage to ground: There should be more than 5 V.	• Faulty driver's door lock switch • A short to ground in the wire
T28	GRN	Driver's door lock switch locked	Measure the voltage to ground: There should be less than 1 V.	• Poor ground (G503) • Faulty driver's door lock switch • An open in the wire
		Driver's door lock switch in neutral or unlocked	Measure the voltage to ground: There should be more than 5 V.	• Faulty driver's door lock switch • A short to ground in the wire
T29	PUR	Front passenger's door lock switch unlocked	Measure the voltage to ground: There should be less than 1 V.	• Poor ground (G504) • Faulty front passenger's door lock switch • An open in the wire
		Front passenger's door lock switch in neutral or unlocked	Measure the voltage to ground: There should be more than 5 V.	• Faulty front passenger's door lock switch • A short to ground in the wire
T30	YEL	Front passenger's door lock switch locked	Measure the voltage to ground: There should be less than 1 V.	• Poor ground (G504) • Faulty front passenger's door lock switch • An open in the wire
		Front passenger's door lock switch in neutral or unlocked	Measure the voltage to ground: There should be more than 5 V.	• Faulty front passenger's door lock switch • A short to ground in the wire
T31	BRN	Driver's door key cylinder switch unlocked	Measure the voltage to ground: There should be less than 1 V.	• Poor ground (G501) • Faulty driver's door key cylinder switch • An open in the wire
		Driver's door key cylinder switch in neutral or locked	Measure the voltage to ground: There should be more than 5 V.	• Faulty driver's door key cylinder switch • A short to ground in the wire
T32	ORN	Driver's door key cylinder switch locked	Measure the voltage to ground: There should be less than 1 V.	• Poor ground (G501) • Faulty driver's door key cylinder switch • An open in the wire
		Driver's door key cylinder switch in neutral or locked	Measure the voltage to ground: There should be more than 5 V.	• Faulty driver's door key cylinder switch • A short to ground in the wire

Door Lock Actuator Test

Driver's Door and Left Rear Door

1. Remove the door panel (see page 20-7).
2. Disconnect the 10P connector (A) from the actuator (B).

   NOTE: The illustration shows the driver's door.

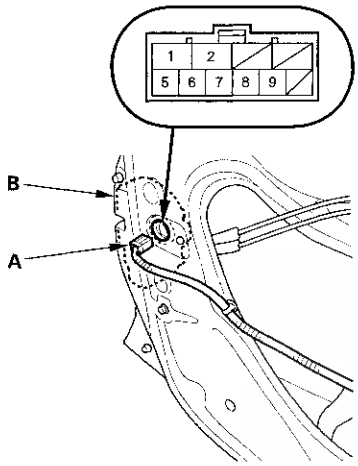

3. Check actuator operation by connecting power and ground according to the table. To prevent damage to the actuator, apply battery voltage only momentarily.

Position \ Terminal	1	2
LOCK	⊕	⊖
UNLOCK	⊖	⊕

4. If the actuator does not operate as specified, replace it.

Front Passenger's Door and Right Rear Door

1. Remove the door panel (see page 20-7).
2. Disconnect the 10P connector (A) from the actuator (B).

   NOTE: The illustration shows the front passenger's door.

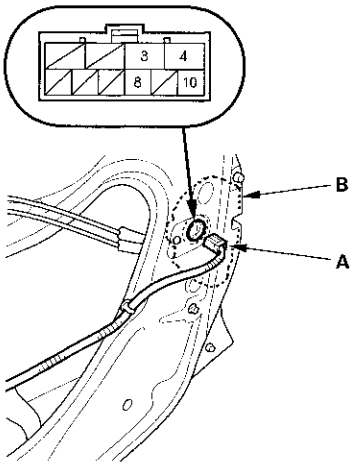

3. Check actuator operation by connecting power and ground according to the table. To prevent damage to the actuator, apply battery voltage only momentarily.

Position \ Terminal	3	4
LOCK	⊕	⊖
UNLOCK	⊖	⊕

4. If the actuator does not operate as specified, replace it.

Door Lock Knob Switch Test

Driver's Door

1. Remove the driver's door panel (see page 20-7).
2. Disconnect the 10P connector (A) from the actuator (B).

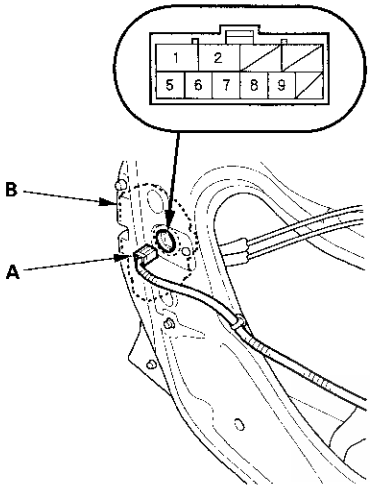

3. Check for continuity between the terminals.
   - There should be continuity between terminals No. 6 and No. 5 when the door lock knob switch is in the LOCK position and no continuity when the switch is in the UNLOCK position.
   - There should be continuity between terminals No. 7 and No. 5 when the door lock knob switch is in the UNLOCK position and no continuity when the switch is in the LOCK position.
4. If the continuity is not as specified, replace the door lock actuator.

Passenger's Door

1. Remove the passenger's door panel (see page 20-7).
2. Disconnect the 10P connector (A) from the actuator (B).

   NOTE: The illustration shows the front passenger's door.

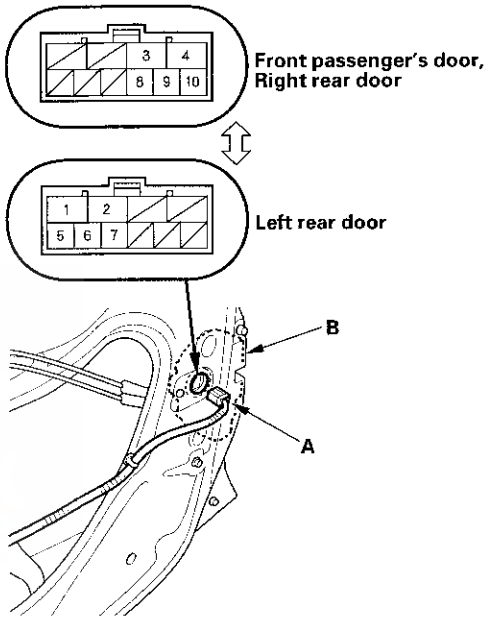

3. Check for continuity between the terminals. There should be continuity between terminals No. 8 [No. 7] and No. 10 [No. 5] when the door lock knob switch in the UNLOCK position and no continuity when the switch is in the LOCK position.
   [ ] : Left rear door
4. If the continuity is not specified, replace the door lock actuator.

Door Lock Switch Test

Driver's door

1. Remove the power window master switch and disconnect its connector (see page 22-201).

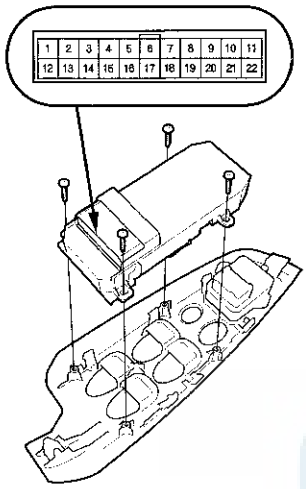

2. Check for continuity between the power window master switch 22P connector terminals.

   - There should be continuity between terminals No. 11 and No. 17 when the door lock switch is in the LOCK position. (With security)
   - There should be no continuity between terminals No. 11 and No. 17 when the door lock switch is in the UNLOCK position. (With security)
   - There should be continuity between terminals No. 11 and No. 19 when the door lock switch is in the UNLOCK position.
   - There should be no continuity between terminals No. 11 and No. 19 when the door lock switch is in the LOCK position.

3. If the continuity is not as specified, replace the power window master switch.

Front passenger's door

1. Remove the front passenger's switch (see page 22-202).

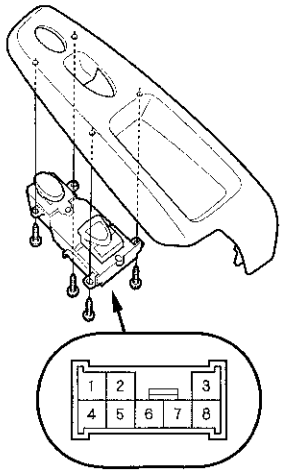

2. Check for continuity between the front passenger's power window switch 8P connector terminals.

   - There should be continuity between terminals No. 1 and No. 2 when the door lock switch is in the LOCK position.
   - There should be no continuity between terminals No. 1 and No. 2 when the door lock switch is in the UNLOCK position.
   - There should be continuity between terminals No. 2 and No. 6 when the door lock switch is in the UNLOCK position.
   - There should be no continuity between terminals No. 2 and No. 6 when the door lock switch is in the LOCK position.

3. If the continuity is not as specified, replace the front passenger's power window switch.

Door Key Cylinder Switch Test

1. Remove the driver's door panel (see page 20-7).

2. Disconnect the 10P connector (A) from the key cylinder switch (B).

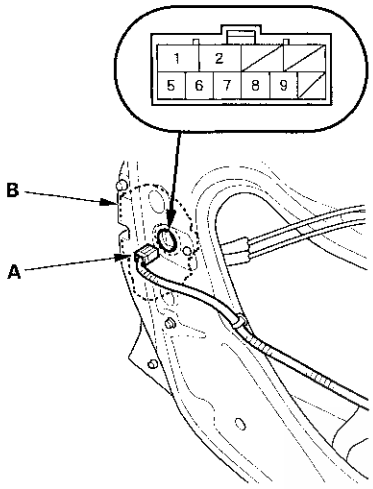

3. Check for continuity between the terminals.

   - There should be continuity between terminals No. 9 and No. 5 when the door key cylinder switch is in LOCK position.
   - There should be no continuity between terminals No. 9 and No. 5 when the door key cylinder switch is in the neutral or UNLOCK position.
   - There should be continuity between terminals No. 8 and No. 5 when the door key cylinder switch is in the UNLOCK position.
   - There should be no continuity between terminals No. 8 and No. 5 when the door key cylinder switch is in the neutral or LOCK position.

4. If the continuity is not as specified, replace the door key cylinder assembly (see page 20-9).

Trunk Lid Release Actuator Test

With keyless trunk ('06-08 USA models and '09 model)

1. Open the trunk lid.

2. Disconnect the 3P connector (A) from the trunk lid latch switch/trunk release actuator (B).

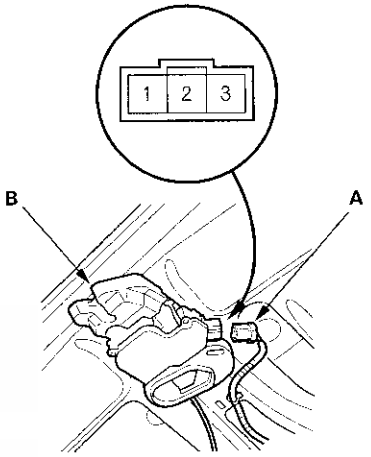

3. Check actuator operation by connecting power to terminal No. 1 and ground to terminal No. 2 momentarily. The actuator should work.

4. If the actuator does not work, replace the trunk lid latch switch/release actuator assembly (see page 20-162).

Trunk Key Cylinder Switch Test

'06-08 models

1. Open the trunk lid.
2. Disconnect the 3P connector (A) from the trunk key cylinder switch (B).

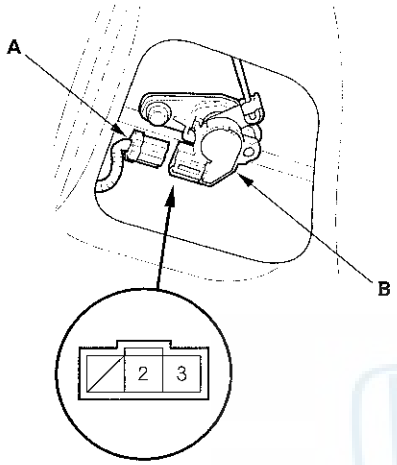

3. Check for continuity between the terminals.
   - There should be no continuity between terminals No. 2 and No. 3 when the trunk key cylinder switch is in the neutral position.
   - There should be continuity between terminals No. 2 and No. 3 when the trunk key cylinder switch is in the UNLOCK position.
4. If the continuity is not as specified, replace the trunk key cylinder switch (see page 20-162).

Hood Switch Test

1. Open the hood.
2. Disconnect the 2P connector from the hood switch.

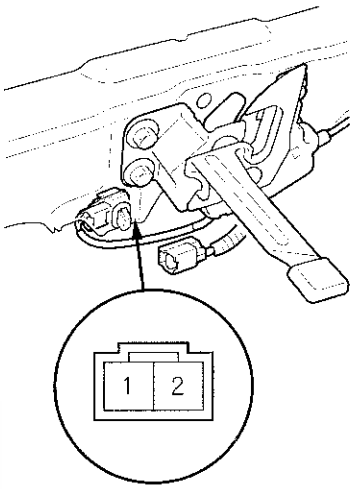

3. Check for continuity between the terminals.
   - There should be continuity between terminals No. 1 and No. 2 when the hood is opened (latch released).
   - There should be no continuity between terminals No. 1 and No. 2 when the hood is closed (latch pushed down).
4. If the continuity is not as specified, replace the hood latch assembly (see page 20-158).

Transmitter Test/Replacement

NOTE:
- If the doors unlock or lock with the transmitter, but the LED on the transmitter does not come on, the LED is faulty; replace the transmitter.
- If any door is open, you cannot lock the doors with the transmitter.
- If you unlocked the doors with the transmitter, but do not open any of the doors within 30 seconds, the doors relock automatically.
- The doors do not lock or unlock with the transmitter if the ignition key is inserted in the ignition switch.

With HDS

1. Press the lock or unlock button five or six times to reset the transmitter.

   - If the locks work, the transmitter is OK.
   - If any of the transmitter buttons do not work, replace the transmitter, then do the transmitter programming registration (see page 22-301).
   - If the locks don't work, go to step 2.

2. Connect the HDS to the data link connector.

3. Select the KEYLESS from the BODY ELECTRICAL menu, then enter the KEYLESS CHECK.

4. Press lock, unlock, trunk, or panic button and check the response on the screen of the HDS.

   NOTE: The door lock actuators may or may not cycle when receiving input from the transmitter.

   - If KEYLESS ENTRY TRANSMITTER CODE IS RECEIVED is indicated, the transmitter is OK.
   - If DIFFERENT KEYLESS ENTRY TRANSMITTER CODE IS RECEIVED is indicated, the transmitter is not registered to the vehicle, if necessary, reprogram and register the transmitter (see page 22-301).
   - If KEYLESS ENTRY TRANSMITTER CODE IS NOT RECEIVED is indicated, go to step 5.

5. Open the transmitter and check for water damage.

   - If you find any water damage, replace the transmitter, then reprogram and register the transmitter (see page 22-301).
   - If there is no water damage, go to step 6.

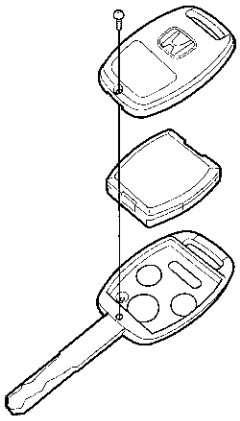

6. Replace the transmitter battery (A) with a new one, and press lock or unlock button and check the receive condition on the screen of the HDS.

   - If KEYLESS ENTRY TRANSMITTER CODE IS RECEIVED is indicated, the transmitter is OK.
   - If KEYLESS ENTRY TRANSMITTR CODE IS NOT RECEIVED is indicated, go to step 7.

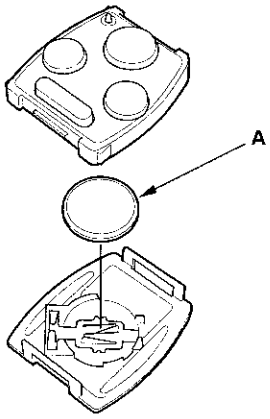

(cont'd)

Transmitter Test/Replacement (cont'd)

7. Use a different known-good keyless transmitter and repeat steps 3 and 4.

   NOTE: The keyless transmitter does not need to be programmed to the vehicle for this test.

   - If (DIFFERENT) KEYLESS ENTRY TRANSMITTER CODE IS RECEIVED is indicated, replace the keyless transmitter and do the immobilizer system registration (see page 22-301).
   - If KEYLESS ENTRY TRANSMITTER CODE IS NOT RECEIVED is indicated, the immobilizer-keyless control unit is faulty, replace it and do the immobilizer system registration (see page 22-301).

   NOTE: As the keyless transmitter is combined with the immobilizer transponder, when the transponder is registered by the HDS, the keyless transmitter programming is completed automatically.

Without HDS

1. Start the engine.

   - If the engine does not start, go to the immobilizer system troubleshooting (see page 22-293).
   - If the engine starts, go to step 2.

2. Press the lock or unlock button five or six times to reset the transmitter.

   - If the locks work, the transmitter is OK.
   - If the locks don't work, go to step 3.

3. Open the transmitter and check for water damage.

   - If you find any water damage, replace the transmitter.
   - If there is no water damage, go to step 4.

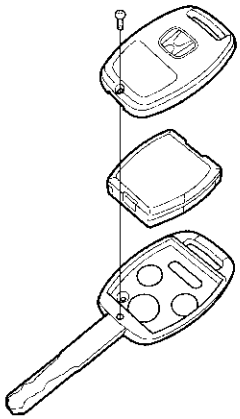

4. Replace the transmitter battery (A) with a new one, and try to lock and unlock the doors with the transmitter by pressing the lock or unlock button five or six times.

   - If the doors lock and unlock, the transmitter is OK.
   - If the doors don't lock and unlock, go to step 5.

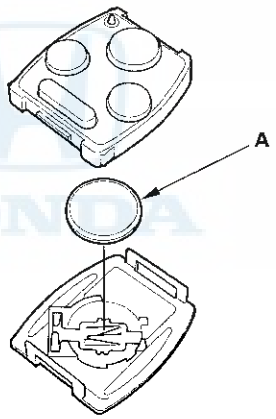

5. Reprogram and register the transmitter (see page 22-299), then try to lock and unlock the doors.

   - If the doors lock and unlock, the transmitter is OK.
   - If the doors don't lock and unlock, substitute a known-good transmitter and recheck (see page 22-301). If still not operating, replace the immobilizer-keyless control unit.

Component Location Index

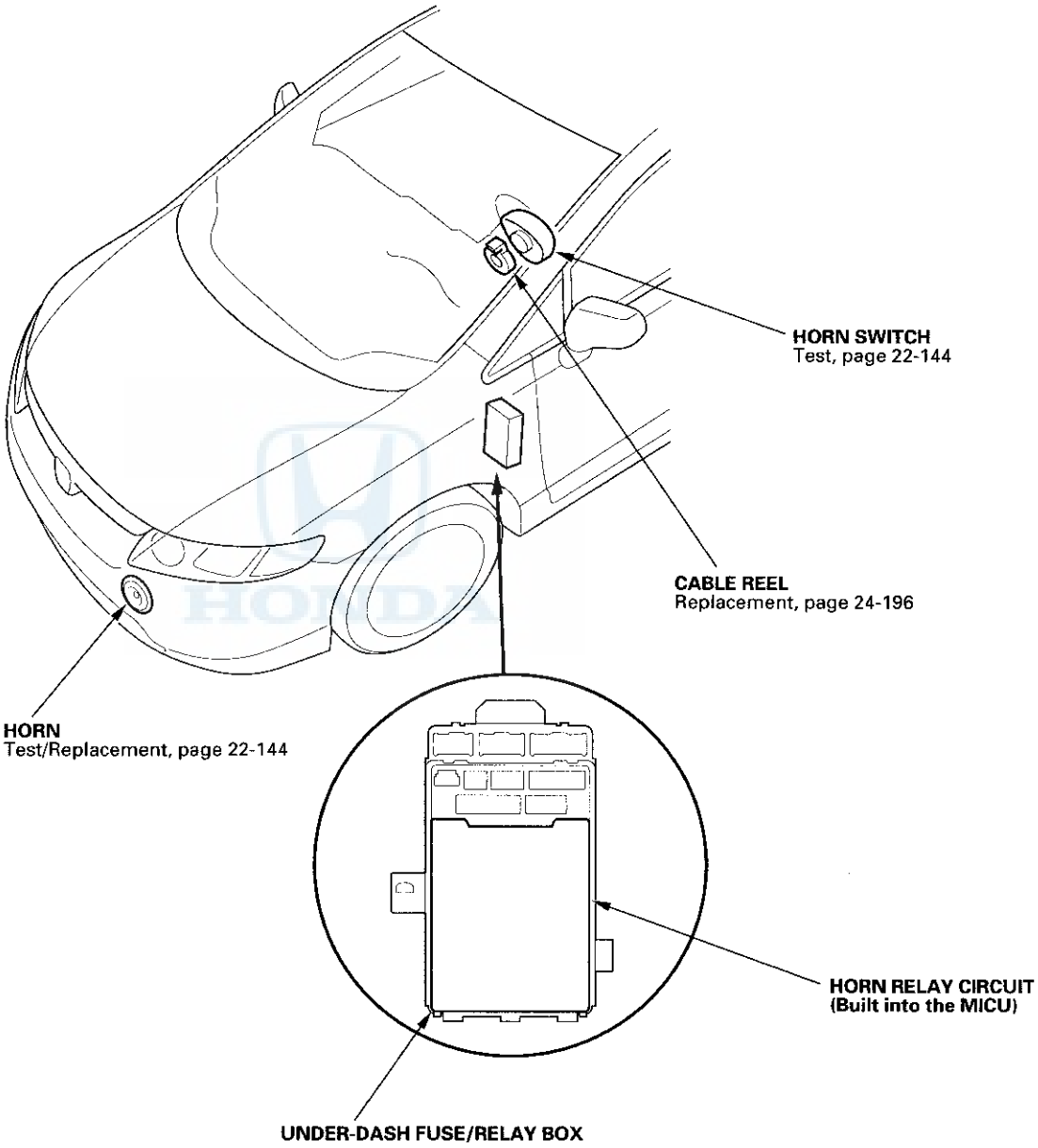

Circuit Diagram

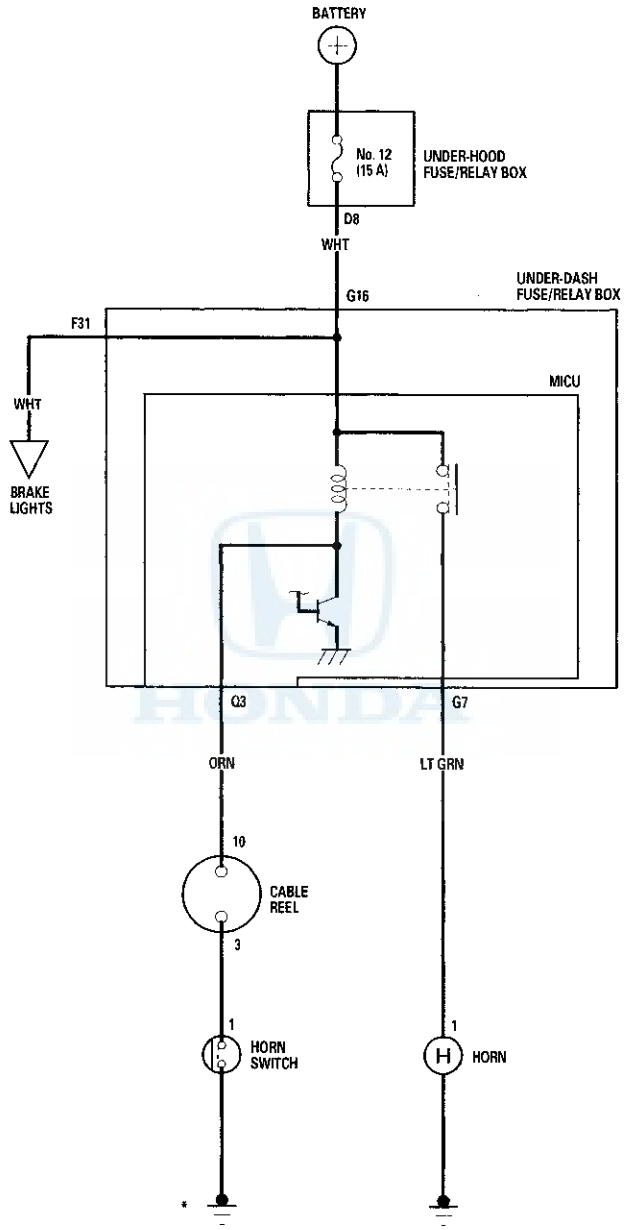

* : Ground through steering column.

Horn Test/Replacement

1. Remove the front bumper (see page 20-122).
2. Disconnect the 1P connector (A) from the horn (B).

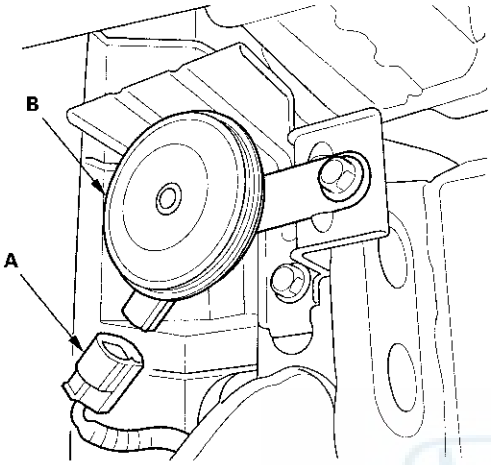

3. Test the horn by connecting battery power to the terminal (A) and grounding the bracket (B). The horn should sound.

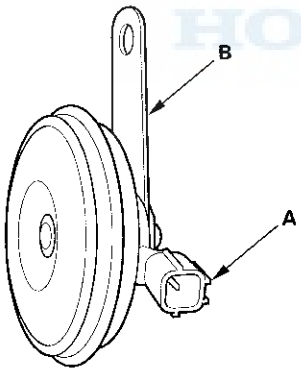

4. If it fails to sound, replace it.

Horn Switch Test

1. Remove the steering column covers (see page 17-10).
2. Disconnect the cable reel 20P connector (A) from the dashboard wire harness.

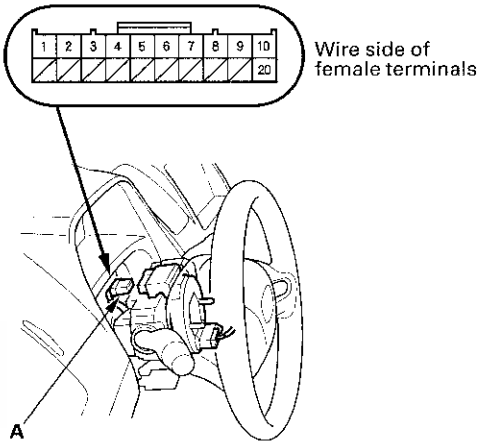

3. Using a jumper wire, connect dashboard wire harness 20P connector terminal No. 10 to body ground. The horn should sound.
   - If the horn sounds, go to step 4.
   - If the horn does not sound, check these items:
     - No. 12 (15 A) fuse in the under-hood fuse/relay box.
     - MICU
     - Horn (see page 22-144).
     - An open in the wire.

4. Reconnect the cable reel 20P connector (A) to the dashboard wire harness.

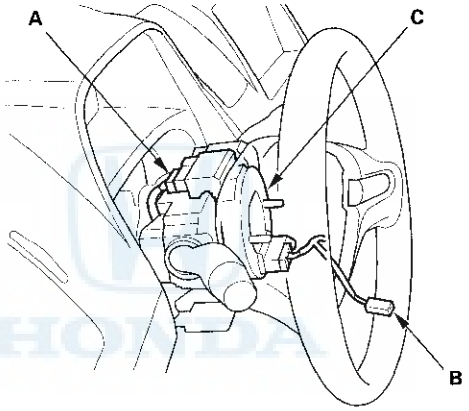

5. Remove the driver's airbag assembly (see page 24-184), and disconnect the horn switch 1P positive terminal (B) from the cable reel (C).

6. Using a jumper wire, connect the horn switch 1P connector to body ground.

   - If the horn sounds, replace the driver's airbag assembly.
   - If the horn does not sound, check these items:
     – Cable reel.
     – An open in the wire.

Component Location Index

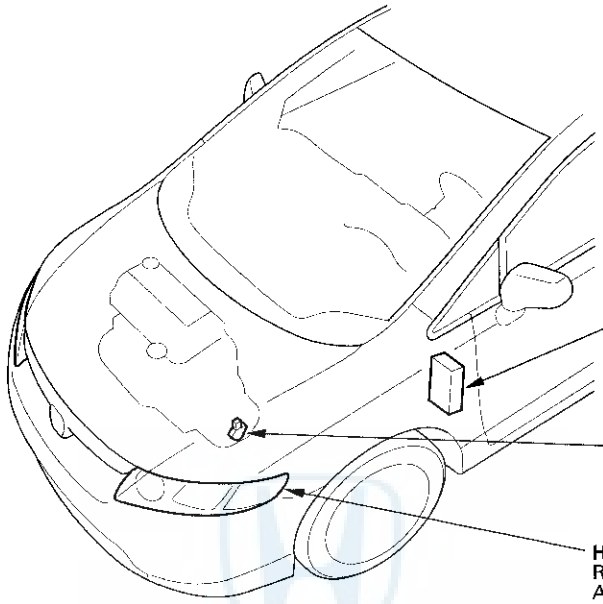

DAYTIME RUNNING LIGHTS CIRCUIT (Built into the MICU)
Input Test, page 22-158

TRANSMISSION RANGE SWITCH
Test, page 14-211

HEADLIGHTS
Replacement, page 22-164
Adjustment, page 22-163
Bulb Replacement, page 22-165

FRONT SIDE MARKER/PARKING/ TURN SIGNAL LIGHTS
Bulb Replacement, page 22-165

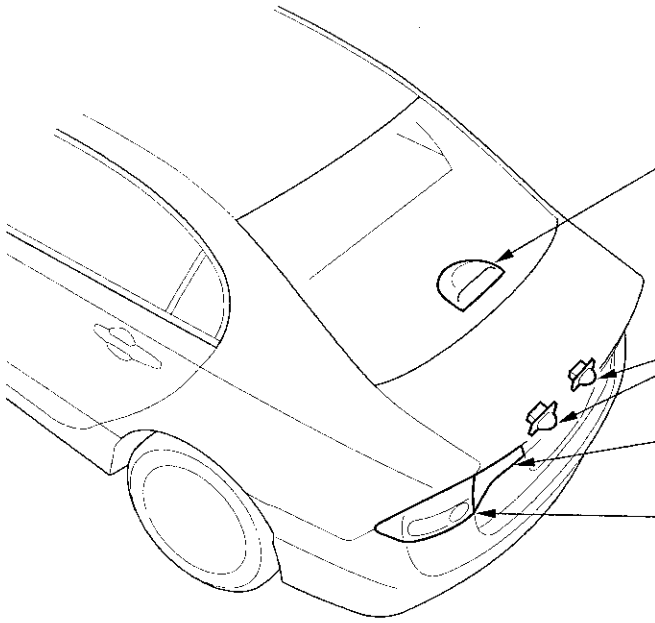

HIGH MOUNT BRAKE LIGHT
Replacement, page 22-167

LICENSE PLATE LIGHTS
Replacement, page 22-167

INNER TAILLIGHT
Replacement, page 22-166

TAILLIGHT and BRAKE LIGHT
Replacement, page 22-166

REAR TURN SIGNAL LIGHT
Replacement, page 22-166

BACK-UP LIGHT
Replacement, page 22-166

REAR SIDE MARKER LIGHT
Replacement, page 22-166

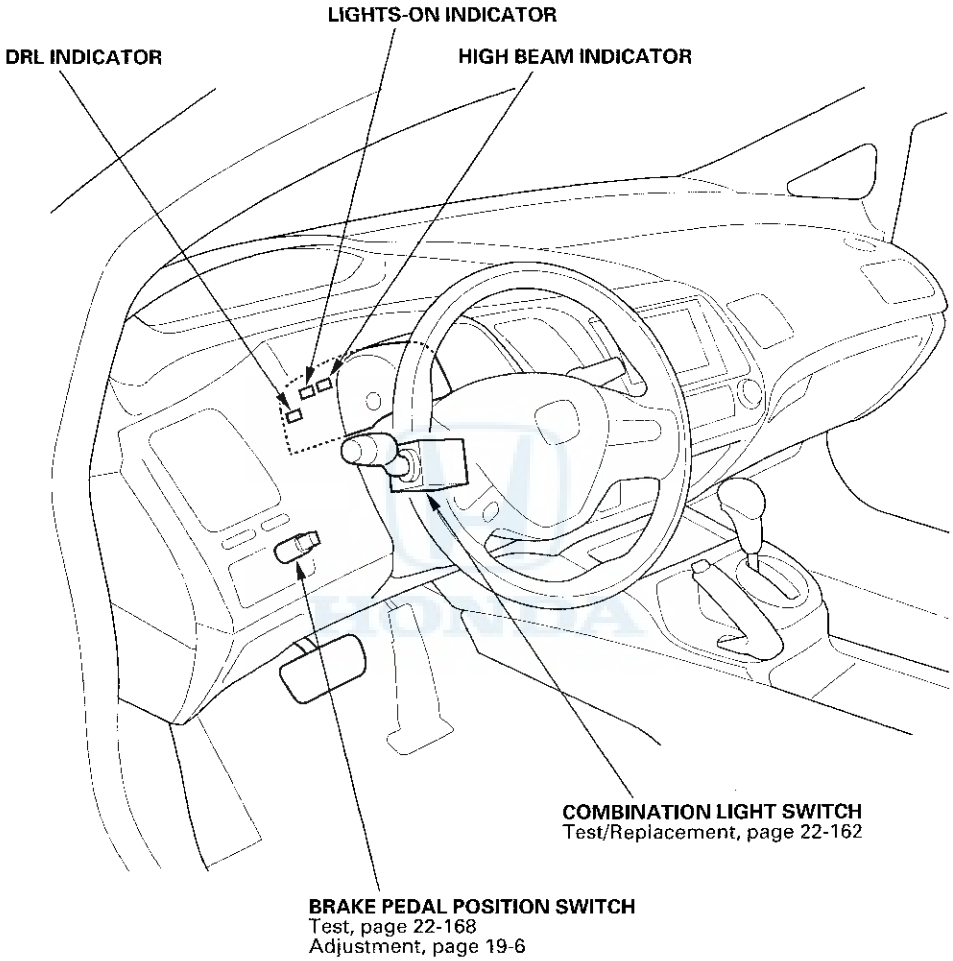
LIGHTS-ON INDICATOR
DRL INDICATOR
HIGH BEAM INDICATOR
COMBINATION LIGHT SWITCH
Test/Replacement, page 22-162
BRAKE PEDAL POSITION SWITCH
Test, page 22-168
Adjustment, page 19-6

Circuit Diagram

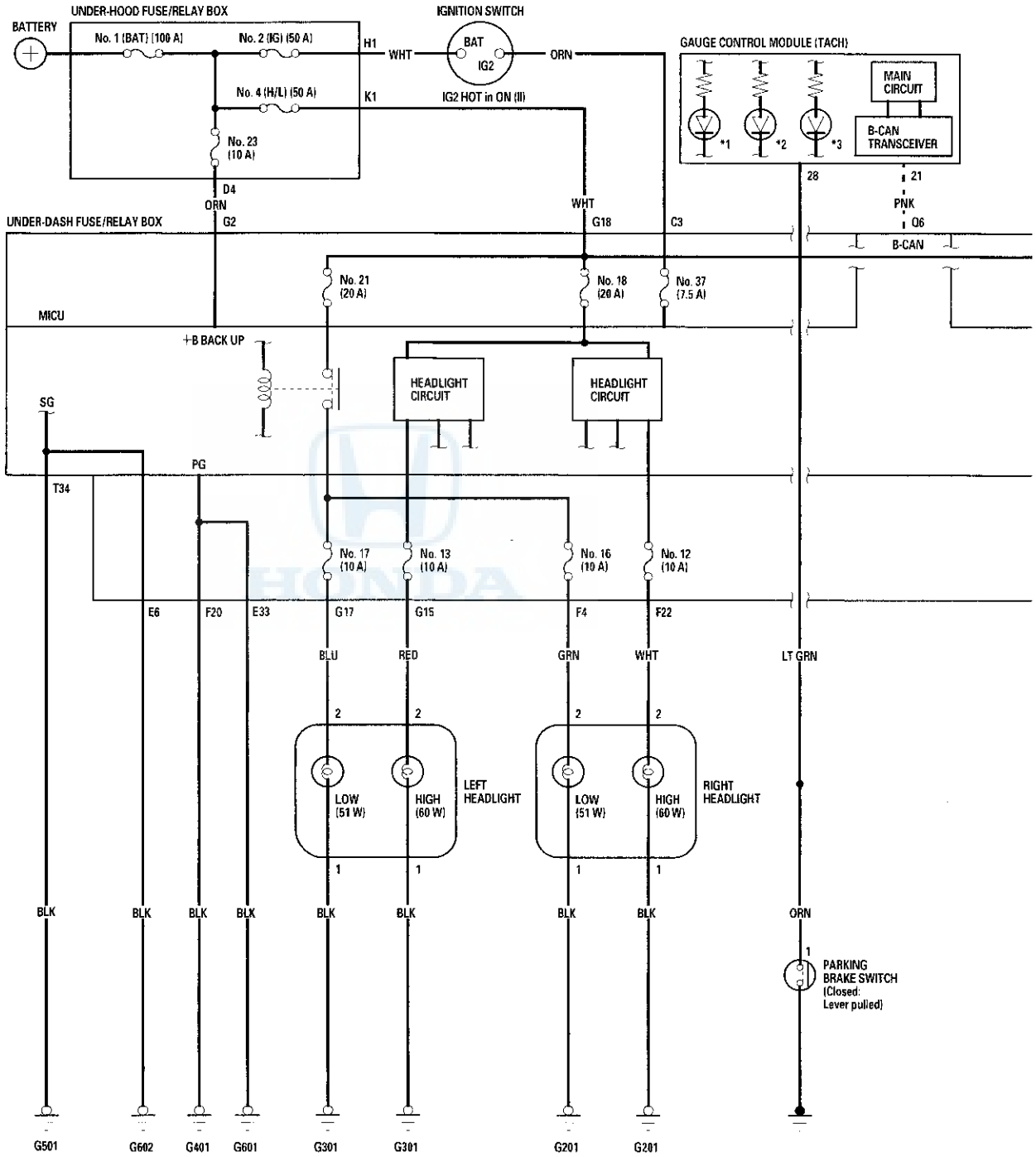

*1: HIGH-BEAM INDICATOR (LED)
*2: LIGHT-ON INDICATOR (LED)
*3: DRL INDICATOR (LED)
- - - - - - - - - - - : CAN line

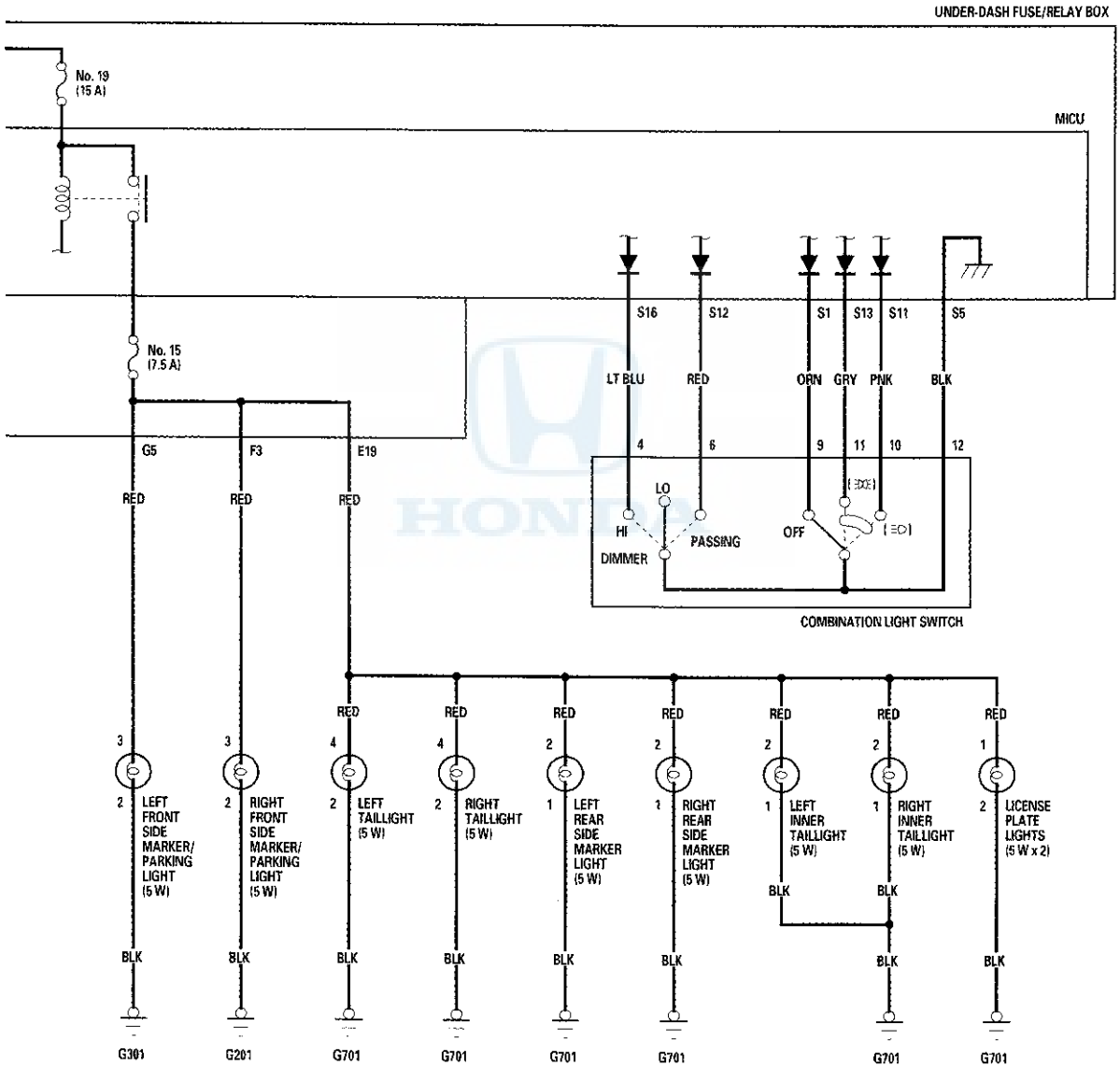

Circuit Diagram - Brake Lights

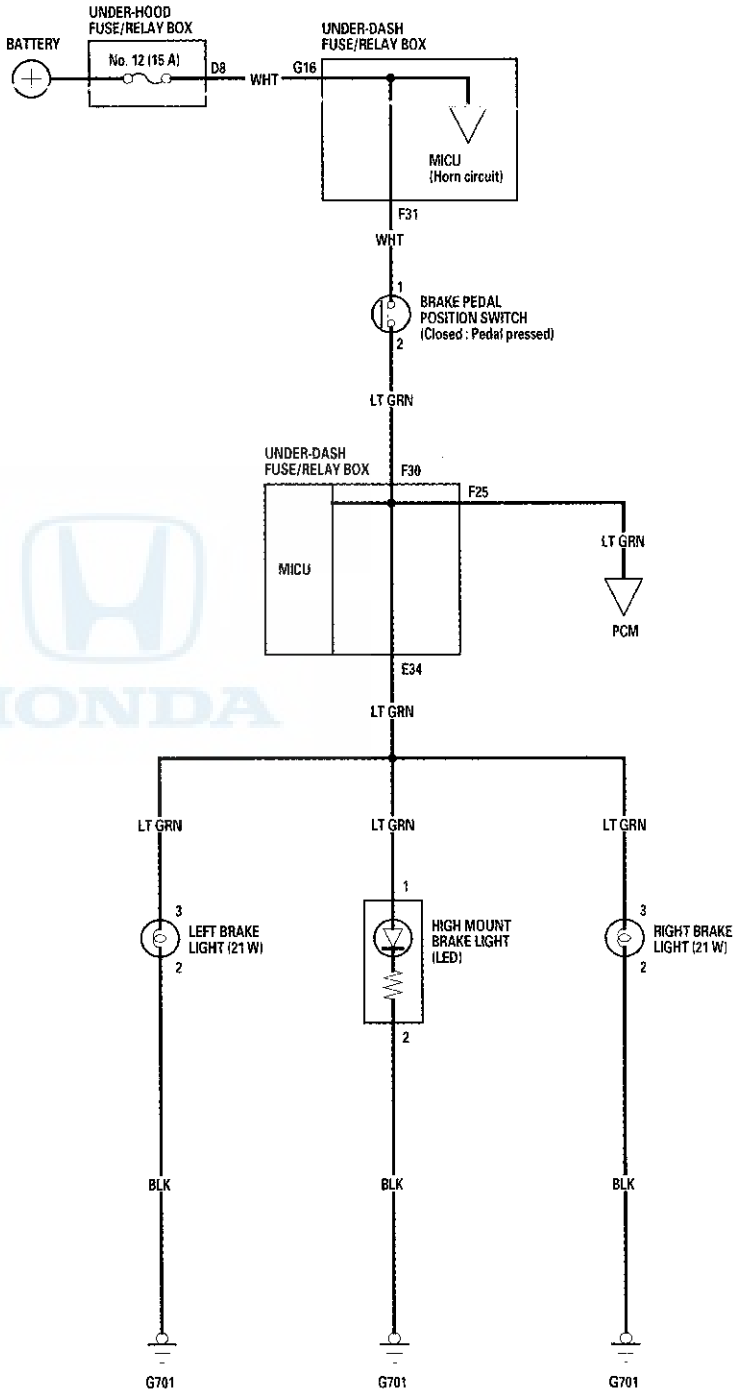

Circuit Diagram - Back-up Lights

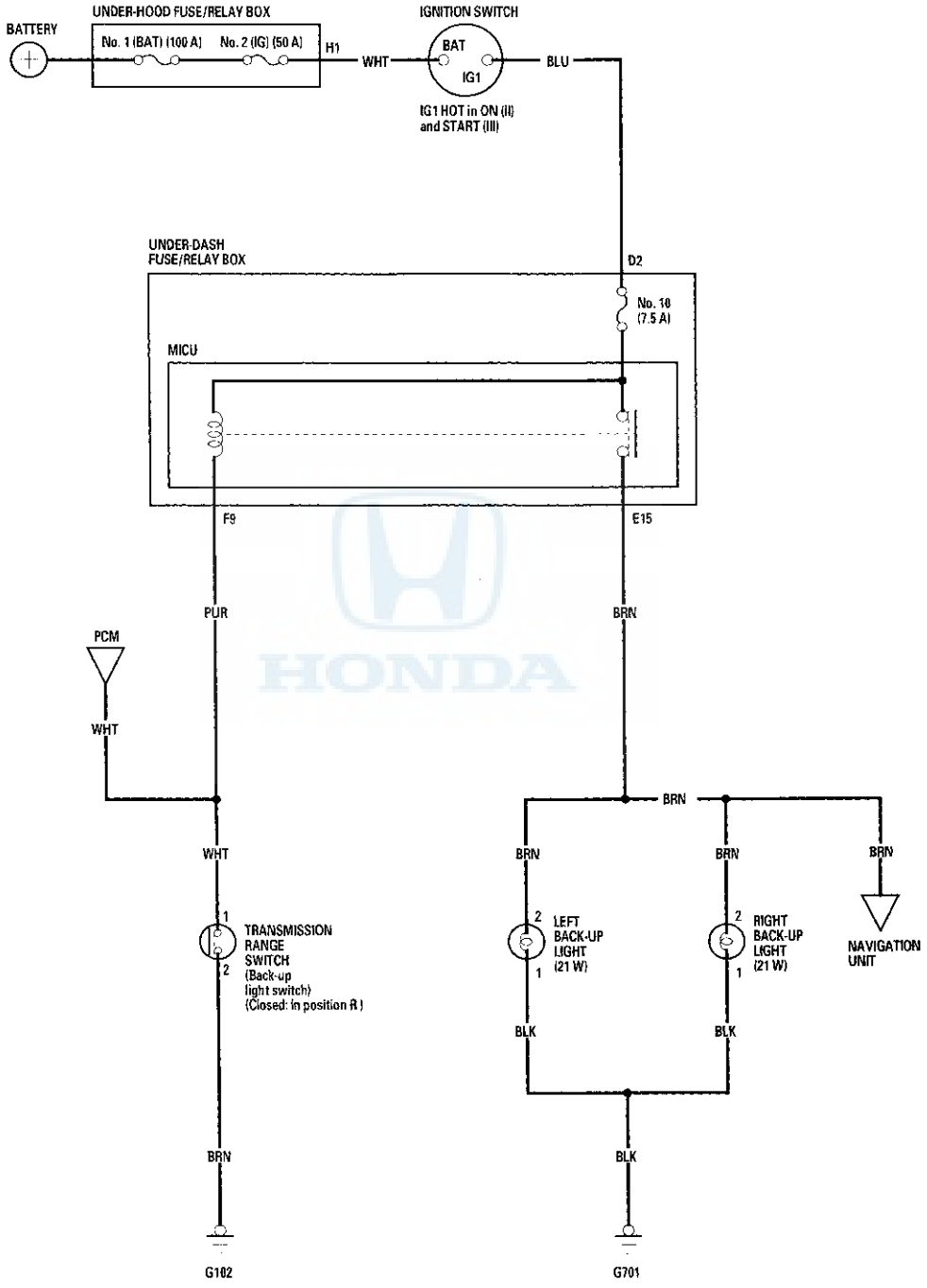

DTC Troubleshooting

DTC B1078: Daytime Running Lights System Error (Canada)

DTC B1079: Daytime Running Lights System Error (USA)

NOTE: If you are troubleshooting multiple DTCs, be sure to follow the instructions in B-CAN System Diagnosis Test Mode A (see page 22-89).

1. Turn the ignition switch to ON (II).
2. Pull the parking brake lever.
3. Clear the DTCs with the HDS.
4. Release the parking brake lever.
5. Turn the ignition switch to LOCK (0), and then back to ON (II).
6. Check for DTCs with the HDS.

   Is DTC B1078 indicated?

   YES—Go to step 7.

   NO—Intermittent failure. The daytime running lights are OK at this time. Check for loose or poor connections.■

7. Turn the headlights ON (high beam).

   Do both headlights (high beam) come on?

   YES—Go to step 8.

   NO—Go to step 11.

8. Turn the ignition switch to LOCK (0).
9. Measure the voltage between under-dash fuse/relay box connector E (42P) terminals No. 6 and No. 33 and body ground, and between under-dash fuse/relay box connector F (34P) terminal No. 20 and body ground individually.

UNDER-DASH FUSE/RELAY BOX CONNECTOR E (42P)

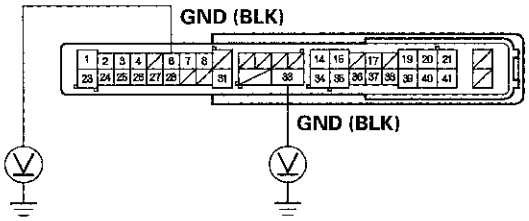

Wire side of female terminals

UNDER-DASH FUSE/RELAY BOX CONNECTOR F (34P)

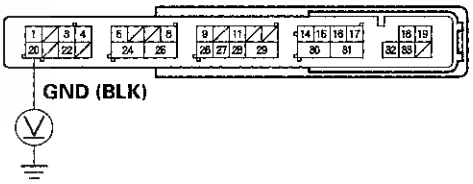

Wire side of female terminals

Is there less than 1 V?

YES—Faulty MICU; replace the under-dash fuse/relay box (see page 22-60).■

NO—Repair an open in the BLK wire or poor ground (G401, G501, G601, G602).■

10. Turn the ignition switch to LOCK (0) and turn the headlight switch OFF.

11. Check the No. 12, No. 13, and No. 18 fuses in the under-dash fuse/relay box.

    Are all fuses OK?

    YES—Go to step 12.

    NO—Replace the blown fuse and recheck. If the No. 18 (30 A) fuse is blown again, replace the under-dash fuse/relay box. If the No. 12 (10 A) or No. 13 (10 A) fuse is blown again, repair a short in the wire between the under-dash fuse/relay box and the appropriate headlight (high beam). ■

12. Check the headlight bulbs.

    Are the headlight bulbs OK?

    YES—Go to step 13.

    NO—Replace the faulty bulb. ■

13. Disconnect under-dash fuse/relay box connectors F (34P) and G (21P).

14. Disconnect headlight (high beam) 2P connectors.

15. Check for continuity between right headlight (high beam) 2P connector terminal No. 2 and under-dash fuse/relay box connector F (34P) terminal No. 22.

UNDER-DASH FUSE/RELAY BOX CONNECTOR F (34P)
Wire side of female terminals

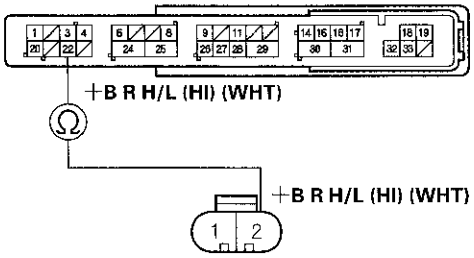

RIGHT HEADLIGHT (HIGH BEAM) 2P CONNECTOR
Wire side of female terminals

Is there continuity?

YES—Go to step 17.

NO—Repair an open in the wire between the right headlight (high beam) and the under-dash fuse/relay box. ■

16. Check for continuity between left headlight (high beam) 2P connector terminal No. 2 and under-dash fuse/relay box connector G (21P) terminal No. 15.

UNDER-DASH FUSE/RELAY BOX CONNECTOR G (21P)
Wire side of female terminals

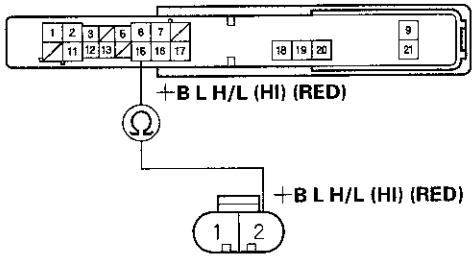

LEFT HEADLIGHT (HIGH BEAM) 2P CONNECTOR
Wire side of female terminals

Is there continuity?

YES—Go to step 17.

NO—Repair an open in the wire between the left headlight (high beam) and the under-dash fuse/relay box. ■

17. Check for continuity between each headlight (high beam) 2P connector terminal No. 1 and body ground.

HEADLIGHT (HIGH BEAM) 2P CONNECTOR

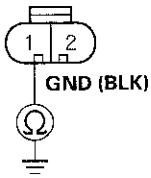

Wire side of female terminals

Is there continuity?

YES—Faulty MICU; replace the under-dash fuse/relay box (see page 22-60). ■

NO—Repair an open in the BLK wire or poor ground (G201-right side, G301-left side). ■

DTC Troubleshooting (cont'd)

DTC B1275: Combination Light Switch OFF Position Circuit Malfunction

DTC B1276: Combination Light Switch Parking (SMALL) Position Circuit Malfunction

DTC B1278: Combination Light Switch ON Position Circuit Malfunction

NOTE: If you are troubleshooting multiple DTCs, be sure to follow the instructions in B-CAN System Diagnosis Test Mode A (see page 22-89).

1. Clear the DTCs with the HDS.
2. Turn the ignition switch to LOCK (0) and then back to ON (II).
3. Turn the combination light switch to the PARKING (SMALL), and ON (low beam) positions for 6 seconds in each position, and then to the OFF position.
4. Check for DTCs with the HDS.

   Is DTC B1275, B1276, or B1278 indicated?

   YES—Go to step 5.

   NO—Intermittent failure, the system is OK at this time. Check for loose or poor connections.■

5. Select LIGHTING from the BODY ELECTRICAL system select menu, and enter DATA LIST.
6. Check each combination light switch position value with the DATA LIST menu.

   When the combination light switch is turned OFF

Data List	Value
Headlight Switch (OFF)	ON
Headlight Switch (PARKING)	OFF
Headlight Switch (HEADLIGHT)	OFF

   When the combination light switch is turned to PARKING (SMALL)

Data List	Value
Headlight Switch (OFF)	OFF
Headlight Switch (PARKING)	ON
Headlight Switch (HEADLIGHT)	OFF

   When the combination light switch is turned ON (HEADLIGHT)

Data List	Value
Headlight Switch (OFF)	OFF
Headlight Switch (PARKING)	ON
Headlight Switch (HEADLIGHT)	ON

   Are all data list values correct?

   YES—Faulty MICU; replace the under-dash fuse/relay box (see page 22-60).■

   NO—Go to step 7.

7. Turn the ignition switch to LOCK (0).
8. Disconnect the combination light switch 12P connector.
9. Turn the ignition switch to ON (II).
10. Select LIGHTING from the BODY ELECTRICAL system select menu, and enter DATA LIST.
11. Check each combination light switch position value with the DATA LIST menu.

   When the combination light switch is turned OFF

Data List	Value
Headlight Switch (OFF)	OFF
Headlight Switch (PARKING)	OFF
Headlight Switch (HEADLIGHT)	OFF

   Are all data list values indicated OFF?

   YES—Go to step 15.

   NO—Go to step 12.

12. Turn the ignition switch to LOCK (0).

13. Disconnect under-dash fuse/relay box connector S (20P).

14. Check for continuity between body ground and under-dash fuse/relay box connector S (20P) terminals No. 1, No. 11, and No. 13 individually.

UNDER-DASH FUSE/RELAY BOX CONNECTOR S (20P)

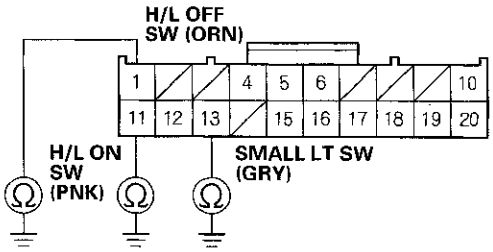

Wire side of female terminals

Is there continuity?

YES—Repair a short to ground in the wire.■

NO—Faulty MICU; replace the under-dash fuse/relay box (see page 22-60).■

15. Turn the ignition switch to LOCK (0).

16. Do the combination light switch test (see page 22-162).

Is the combination light switch OK?

YES—Go to step 17.

NO—Replace the combination light switch (see page 22-162).■

17. Disconnect under-dash fuse/relay box connector S (20P).

18. Check for continuity between under-dash fuse/relay box connector S (20P) terminals and combination light switch 12P connector terminals as shown:

Under-dash fuse/ relay box connector S (20P)	Combination light switch 12P connector
1	9
11	10
13	11
5	12

COMBINATION LIGHT SWITCH 12P CONNECTOR
Wire side of female terminals

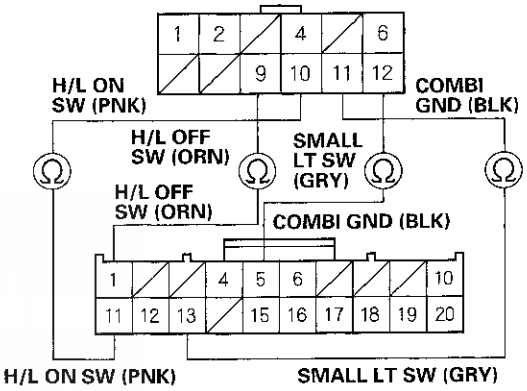

UNDER-DASH FUSE/RELAY BOX CONNECTOR S (20P)
Wire side of female terminals

Is there continuity?

YES—Go to step 19.

NO—Repair an open in the wire.■

19. Check for continuity between under-dash fuse/relay box connector S (20P) terminals as shown:

From terminal	To terminal
1	11, 12, 13, 16
13	11, 12, 16

Is there continuity?

YES—Repair a short between the wires.■

NO—Faulty MICU; replace the under-dash fuse/relay box (see page 22-60).■

DTC Troubleshooting (cont'd)

DTC B1279: Headlight Switch DIMMER Position Circuit Malfunction

NOTE: If you are troubleshooting multiple DTCs, be sure to follow the instructions in B-CAN System Diagnosis Test Mode A (see page 22-89).

1. Clear the DTCs with the HDS.
2. Turn the ignition switch to LOCK (0) and then back to ON (II).
3. Turn the combination light (headlight) switch ON.
4. Change the dimmer switch from low beam to high beam.
5. Turn the combination light switch OFF, and then to the passing position, and wait for at least 6 seconds.
6. Check for DTCs with the HDS.

   Is DTC B1279 indicated?

   YES—Go to step 7.

   NO—Intermittent failure, the system is OK at this time. Check for loose or poor connections. ■

7. Select LIGHTING from the BODY ELECTRICAL system select menu, then enter DATA LIST.
8. Check each combination light switch position value with the DATA LIST menu.

   When the passing switch is operated

Data List	Value
Headlight Switch (PASSING)	ON
Headlight Switch (High beam)	OFF

   When the headlight switch is turned ON, and the dimmer switch changed from low beam to high beam

Data List	Value
Headlight Switch (PASSING)	OFF
Headlight Switch (High beam)	ON
Headlight Switch (HEADLIGHT)	ON

   Are all data list values correct?

   YES—Faulty MICU; replace the under-dash fuse/relay box (see page 22-60). ■

   NO—Go to step 9.

9. Turn the ignition switch to LOCK (0).
10. Disconnect the combination light switch 12P connector.
11. Turn the ignition switch to ON (II).
12. Select LIGHTING from the BODY ELECTRICAL system select menu, then enter DATA LIST.
13. Check each combination light switch position value with the DATA LIST menu.

   When the combination light switch is turned OFF

Data List	Value
Headlight Switch (PASSING)	OFF
Headlight Switch (High beam)	OFF
Headlight Switch (HEADLIGHT)	OFF

   Are all data list values indicated OFF?

   YES—Go to step 17.

   NO—Go to step 14.

14. Turn the ignition switch to LOCK (0).
15. Disconnect under-dash fuse/relay box connector S (20P).
16. Check for continuity between body ground and under-dash fuse/relay box connector S (20P) terminals No. 11, No. 12, and No. 16 individually.

UNDER-DASH FUSE/RELAY BOX CONNECTOR S (20P)

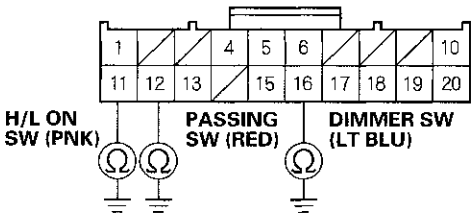

Wire side of female terminals

   Is there continuity?

   YES—Repair a short to ground in the wire. ■

   NO—Faulty MICU; replace the under-dash fuse/relay box (see page 22-60). ■

17. Turn the ignition switch to LOCK (0).

18. Do the combination light switch test (see page 22-162).

    Is the combination light switch OK?

    YES—Go to step 19.

    NO—Replace the combination light switch (see page 22-162).■

19. Disconnect under-dash fuse/relay box connector S (20P).

20. Check for continuity between under-dash fuse/relay box connector S (20P) terminals and combination light switch 12P connector terminals as shown:

Under-dash fuse/ relay box connector S (20P)	Combination light switch 12P connector
5	12
11	10
12	6
16	4

UNDER-DASH FUSE/RELAY BOX CONNECTOR S (20P)
Wire side of female terminals

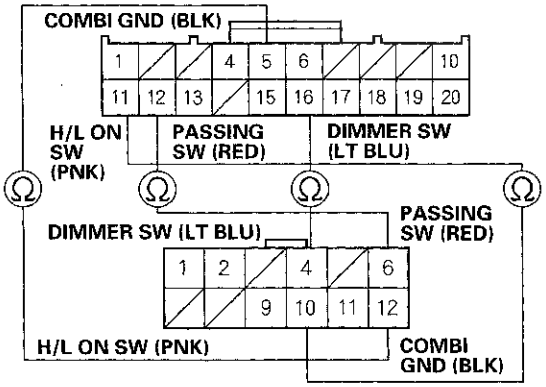

COMBINATION LIGHT SWITCH 12P CONNECTOR
Wire side of female terminals

Is there continuity?

YES—Go to step 21.

NO—Repair an open in the wire.■

21. Check for continuity between under-dash fuse/relay box connector S (20P) terminals as shown:

From terminal	To terminal
12	1, 11, 13, 16
16	1, 11, 13

Is there continuity?

YES—Repair a short between the wires.■

NO—Faulty MICU; replace the under-dash fuse/ relay box (see page 22-60).■

MICU Input Test

NOTE:
- The MICU turns on the headlights (high beams) in a dimming mode for the Daytime Running Lights under the following conditions:
  - With the ignition switch turned to ON (II)
  - The headlight switch OFF
  - The parking brake is released (parking brake switch OFF)
- The DRL indicator will come on when one of the headlight (high beams) bulbs is blown, or if the high beam wiring has an open circuit with the daytime running lights ON.
- For Canada models: If the vehicle is equipped with an optional remote control engine start system, the daytime running lights will not function when started with the remote start.

1. Before testing the lighting system, troubleshoot the system using B-CAN System Diagnosis Test Mode A (see page 22-89).

2. Check the No. 12 (10 A), No. 13 (10 A), No. 15 (7.5 A), No. 16 (10 A), No. 17 (10 A), No. 18 (20 A), No. 19 (15 A), No. 21 (20 A), and No. 37 (7.5 A) fuses in the under-dash fuse/relay box. If any fuse is blown, replace it and go to step 3.

3. Disconnect under-dash fuse/relay box connectors E, F, G, S, and T.

   NOTE: All connector views are shown from wire side of female terminals.

UNDER-DASH FUSE/RELAY BOX CONNECTOR E (42P)

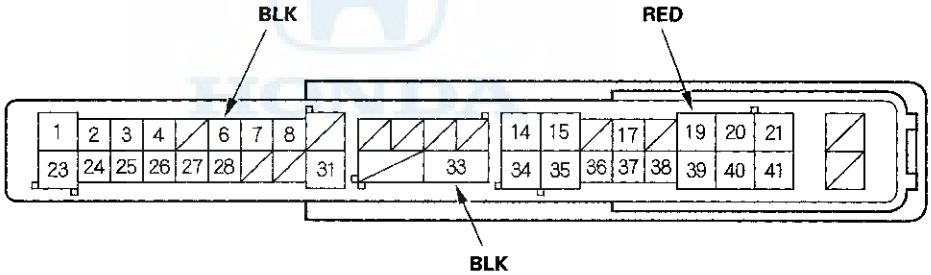

UNDER-DASH FUSE/RELAY BOX CONNECTOR F (34P)

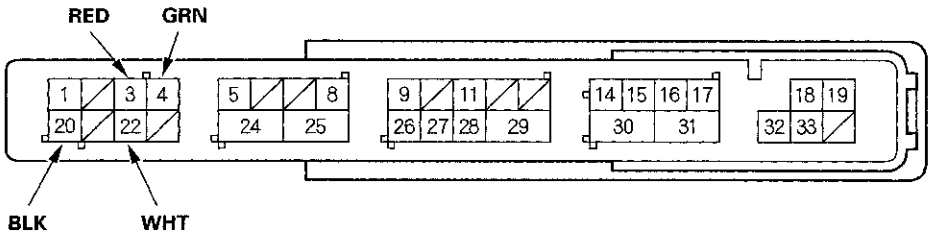

UNDER-DASH FUSE/RELAY BOX CONNECTOR G (21P)

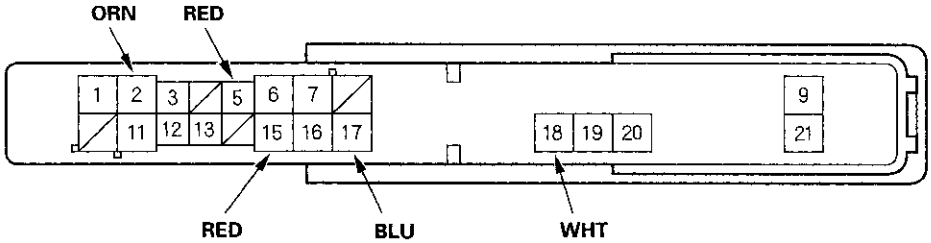

UNDER-DASH FUSE/RELAY BOX
CONNECTOR S (20P)

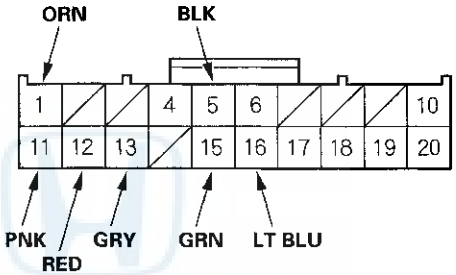

UNDER-DASH FUSE/RELAY BOX
CONNECTOR T (34P)

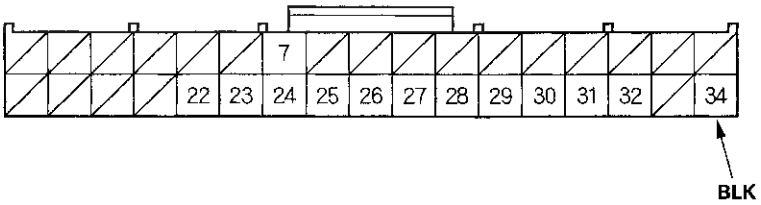

4. Inspect the connector and socket terminals to be sure they are all making good contact.

   - If the terminals are bent, loose or corroded, repair them as necessary and recheck the system.
   - If the terminals look OK, go to step 5.

MICU Input Test (cont'd)

5. With the connector still disconnected, do these input tests at the following connectors.

   - If any test indicates a problem, find and correct the cause, then recheck the system.
   - If all the input tests prove OK, go to step 6.

Cavity	Wire	Test condition	Test: Desired result	Possible cause if desired result is not obtained
E19	RED	Under all conditions	Connect battery power to terminal E19: The taillights, rear side marker lights, and license plate lights should come on.	• Poor ground (G701) • Blown bulb • An open in the wire
F3	RED	Under all conditions	Connect battery power to terminal F3: The right front side marker/ parking light should come on.	• Poor ground (G201) • Blown bulb • An open in the wire
F4	GRN	Under all conditions	Connect battery power to terminal F4: The right headlight (low beam) should come on.	• Poor ground (G201) • Blown bulb • An open in the wire
F22	WHT	Under all conditions	Connect battery power to terminal F22: The right headlight (high beam) should come on.	• Poor ground (G201) • Blown bulb • An open in the wire
G5	RED	Under all conditions	Connect battery power to terminal G5: The left front side marker/parking light should come on.	• Poor ground (G301) • Blown bulb • An open in the wire
G15	RED	Under all conditions	Connect battery power to terminal G15: The left headlight (high beam) should come on.	• Poor ground (G301) • Blown bulb • An open in the wire
G17	BLU	Under all conditions	Connect battery power to terminal G17: The left headlight (low beam) should come on.	• Poor ground (G301) • Blown bulb • An open in the wire

6. Reconnect the connectors to the under-dash fuse/relay box, and do these input tests at the following connectors.

- If any test indicates a problem, find and correct the cause, then recheck the system.
- If all the input tests prove OK, the MICU must be faulty; replace the under-dash fuse/relay box.

Cavity	Wire	Test condition	Test: Desired result	Possible cause if desired result is not obtained
C3	ORN	Ignition switch to ON (II)	Measure the voltage between terminal C3 and body ground there should be battery voltage.	• Faulty ignition switch • An open in the wire
G2	ORN	Under all conditions	Measure the voltage between terminal G2 and body ground: There should be battery voltage.	• Blown No. 23 (10 A) fuse in the under-hood fuse/relay box • An open in the wire
G18	WHT	Under all conditions	Measure the voltage between terminal G18 and body ground: There should be battery voltage.	• Blown No. 4 (50 A) fuse in the under-hood fuse/relay box • An open in the wire
E6	BLK	Under all conditions	Measure the voltage to ground: There should be less than 0.5 V.	• Poor ground (G602) • An open in the wire
E33	BLK	Under all conditions	Measure the voltage to ground: There should be less than 0.5 V.	• Poor ground (G601) • An open in the wire
F20	BLK	Under all conditions	Measure the voltage to ground: There should be less than 0.5 V.	• Poor ground (G401) • An open in the wire
T34	BLK	Under all conditions	Measure the voltage to ground: There should be less than 0.5 V.	• Poor ground (G501) • An open in the wire
S1 · S5	ORN · BLK	Ignition switch ON (II), combination light switch OFF	Measure the voltage between terminals S1 and S5: There should be less than 1 V.	• Faulty combination light switch • An open in the wire
		Ignition switch ON (II), combination light switch in any other position than OFF	Measure the voltage between terminals S1 and S5: There should be more than 5 V.	• Faulty combination light switch • A short to ground in the wire
S11 · S5	PNK · BLK	Ignition switch ON (II), combination light switch (Headlight position) ON	Measure the voltage between terminals S11 and S5: There should be less than 1 V.	• Faulty combination light switch • An open in the wire
		Ignition switch ON (II), combination light switch OFF	Measure the voltage between terminals S11 and S5: There should be more than 5 V.	• Faulty combination light switch • A short to ground in the wire
S12 · S5	RED · BLK	Ignition switch ON (II), combination light switch lever pulled (Passing)	Measure the voltage between terminals S12 and S5: There should be less than 1 V.	• Faulty combination light switch • An open in the wire
		Ignition switch ON (II), combination light switch lever released from passing position	Measure the voltage between terminals S12 and S5: There should be more than 5 V.	• Faulty combination light switch • A short to ground in the wire
S13 · S5	GRY · BLK	Ignition switch ON (II), combination light switch (SMALL position) ON	Measure the voltage between terminals S13 and S5: There should be less than 1 V.	• Faulty combination light switch • An open in the wire
		Ignition switch ON (II), combination light switch OFF	Measure the voltage between terminals S13 and S5: There should be more than 5 V.	• Faulty combination light switch • A short to ground in the wire
S16 · S5	LT BLU · BLK	Ignition switch ON (II), combination light switch (Dimmer) in high beam position	Measure the voltage between terminals S16 and S5: There should be less than 1 V.	• Faulty combination light switch • An open in the wire
		Ignition switch ON (II), combination light switch (Dimmer) in low beam position	Measure the voltage between terminals S16 and S5: There should be more than 5 V.	• Faulty combination light switch • A short to ground in the wire

Combination Light Switch Test/Replacement

1. Remove the dashboard lower cover (see page 20-89).
2. Remove the steering column covers (see page 17-10).
3. Disconnect the 12P connector (A) from the combination light switch (B).

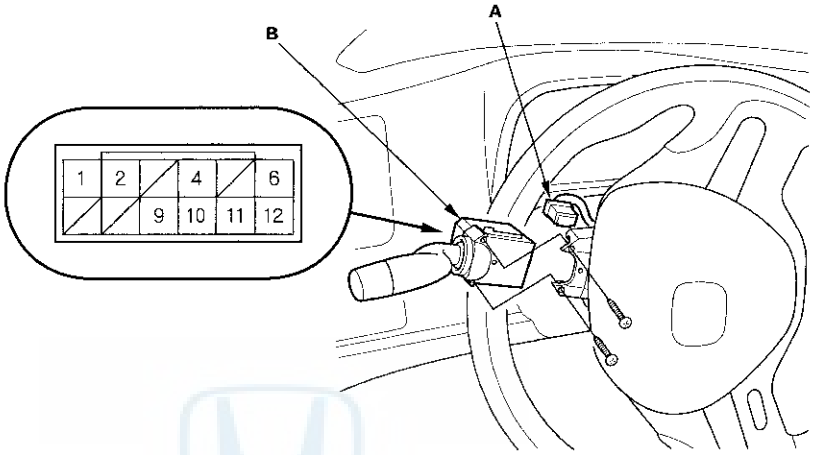

4. Remove the two screws, then slide out the combination light switch.
5. Inspect the connector terminals to be sure they are all making good contact.
   - If the terminals are bent, loose or corroded, repair them as necessary, and recheck the system.
   - If the terminals look OK, check for continuity between the terminals in each switch position according to the tables.
     – If the continuity is not as specified, replace the switch.

Light switch:

Position \ Terminal			4	6	9	10	11	12
Headlight switch	OFF				○			○
	≡DC						○	○
	≡D	LOW				○	○	○
		HIGH	○			○	○	○
Passing switch	OFF							
	ON			○				○

Turn signal switch:

Position \ Terminal	1	2	12
LEFT		○	○
Neutral			
RIGHT	○		○

Headlight Adjustment

⚠CAUTION

Headlights become very hot during use; do not touch them or any attaching hardware immediately after they have been turned off.

Before adjusting the headlights:

- Park the vehicle on a level surface.
- Make sure the tire pressures are correct.
- The driver or someone who weighs the same should sit in the driver's seat.

1. Clean the outer lens so that you can see the center (A) of the headlights.

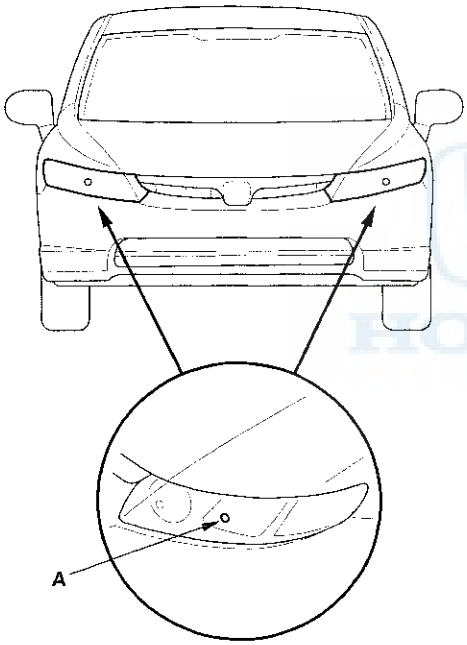

2. Park the vehicle in front of a wall or a screen (A).

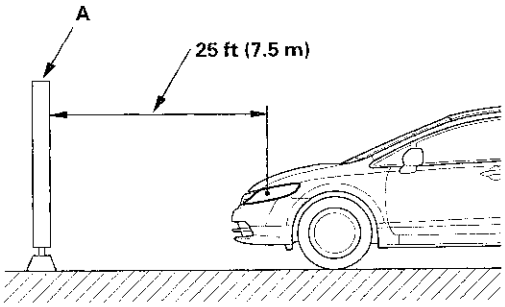

3. Turn the low beams on.

4. Determine if the headlights are aimed properly.

Vertical adjustment:
Measure the height of the headlights (A). Adjust the cut line (B) to the lights height.

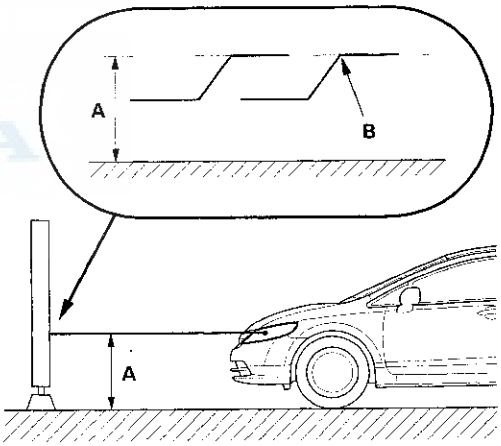

(cont'd)

Headlight Adjustment (cont'd)

5. If necessary, open the hood and adjust the headlights to local requirements by turning the vertical adjuster (A).

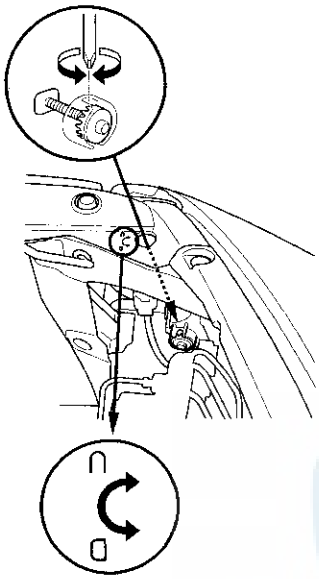

U: UP
D: DOWN

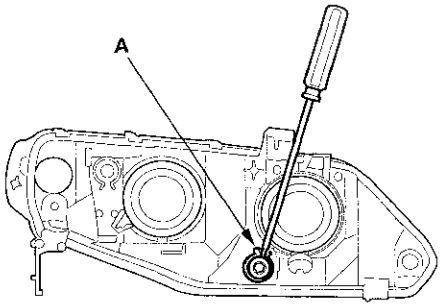

The illustration is shown from back side of left headlight.

Headlight Replacement

1. Remove the front bumper (see page 20-122).
2. Remove the connectors (A) from the headlight assembly (B).

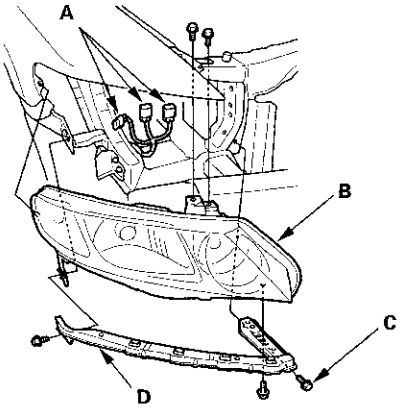

3. Remove the four bolts, then remove the headlight.
4. Remove the bolt (C) and the corner upper beam (D) from the headlight.
5. Install the headlight in the reverse order of removal.
6. After replacement, adjust the headlight to local requirements.

Bulb Replacement

Headlight

1. Disconnect the 2P connector (A) from the headlight.

   Headlight (high beam): 60 W
   Headlight (low beam): 51 W

   Low beam

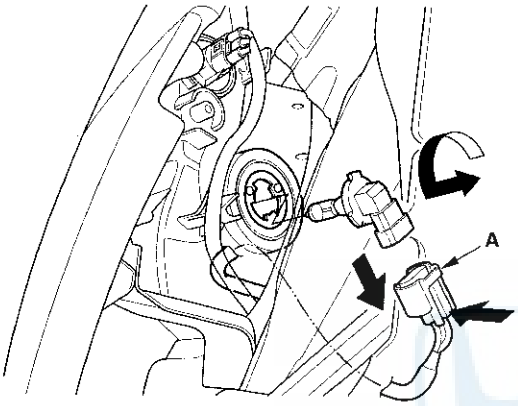

   High beam

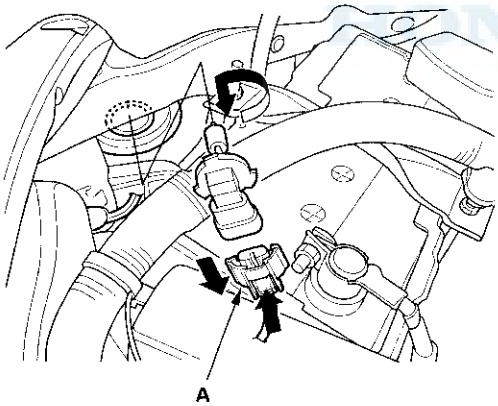

2. Turn the bulb socket 45 ° counterclockwise to remove the bulb.

3. Install a new bulb in the reverse order of removal.

Front Side Marker/Parking/Turn Signal Lights

1. Remove the inner fender (see page 20-147).

2. Disconnect the 3P connector (A) from the front side marker/parking/turn signal.

   Front Side Marker/Parking/ Turn Signal Lights: 21/5 W

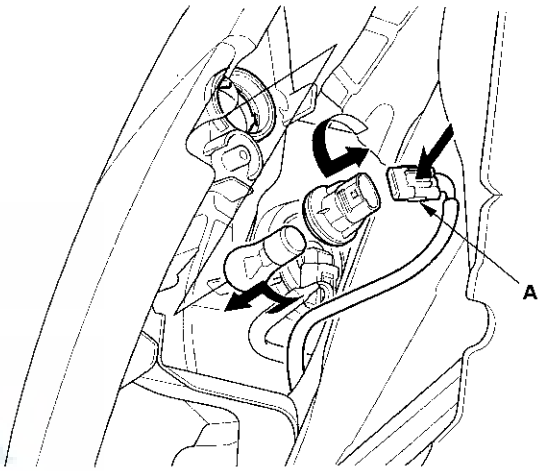

3. Turn the bulb socket 45 ° counterclockwise to remove the bulb.

4. Install a new bulb in the reverse order of removal.

Taillight Replacement

1. Remove the rear bumper (see page 20-127).
2. Open the trunk lid.
3. Disconnect the connectors (A) from the taillights (B).

Brake Lights/Taillights:	**21/5 W**
Rear Turn Signal Light:	**21 W**
Back-up Light:	**21 W**
Rear Side Marker Light:	**5 W**

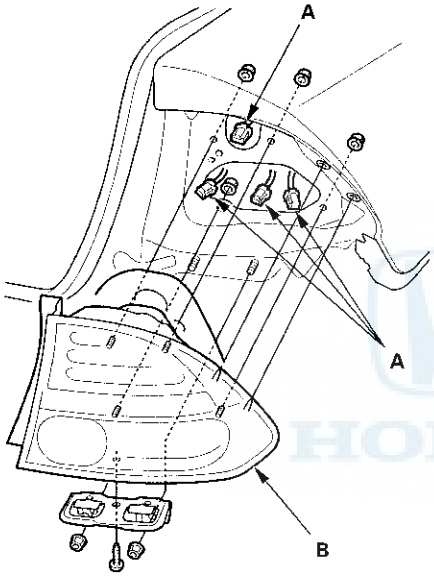

4. Turn the bulb sockets 45 ° counterclockwise to remove the bulbs.
5. Remove the nuts and screws, then remove the taillight.
6. Install the light in the reverse order of removal.

Inner Taillight Replacement

1. Open the trunk lid, and remove the rear license trim (see page 20-144).
2. Disconnect the connector (A) from the inner taillight (B).

Taillight: 5 W

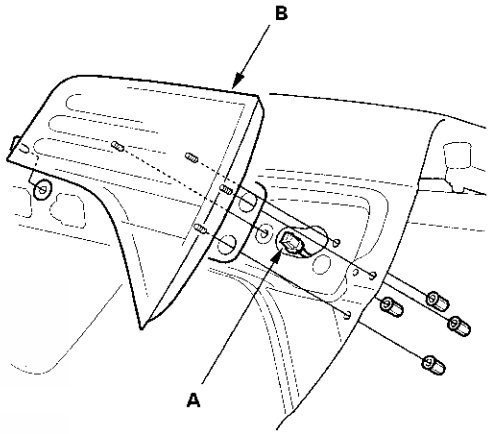

3. Turn the bulb socket 45 ° counterclockwise to remove the bulb.
4. Remove the nuts, then remove the taillight.
5. Install the light in the reverse order of removal.

License Plate Light Replacement

1. Open the trunk lid, and remove the rear license trim (see page 20-144).

2. Disconnect the 2P connector (A) from the license plate light.

License Plate Light: 5 W

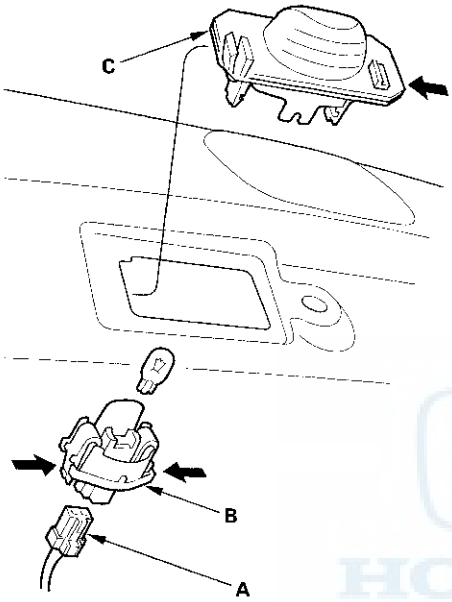

3. Release the bulb socket (B) from the lens (C) by pressing on the tabs.

4. Remove the lens from the trunk lid by pressing on the tabs.

5. Install the light in the reverse order of removal.

High Mount Brake Light Replacement

1. Open the trunk lid.

2. Disconnect the 2P connector (A).

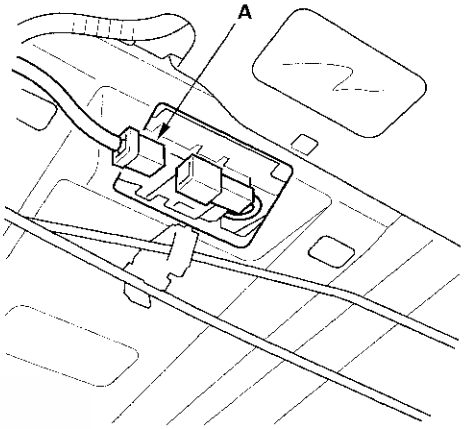

3. Remove the rear shelf (see page 20-66).

4. Remove the high mount brake light (A).

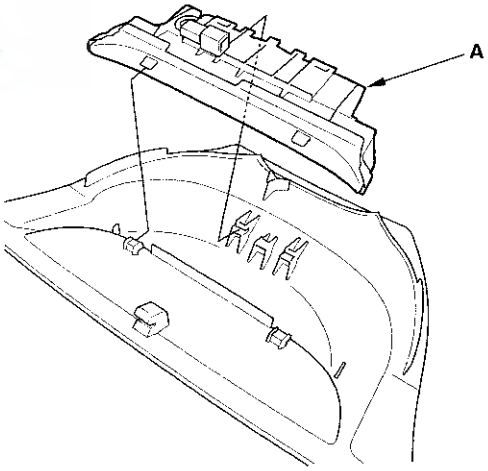

5. Install the light in the reverse order of removal.

Brake Pedal Position Switch Test

1. Disconnect the 4P connector (A) from the brake pedal position switch (B).

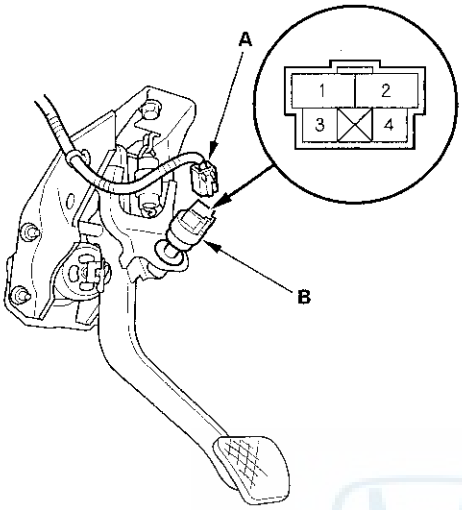

2. Check for continuity between terminals No. 1 and No. 2.

   - There should be continuity when the brake pedal is pressed.
   - There should be no continuity when the brake pedal is released.

3. Check for continuity between terminals No. 3 and No. 4 (with cruise control).

   - There should be no continuity when the brake pedal is pressed.
   - There should be continuity when the brake pedal is released.

4. If necessary, adjust or replace the switch, or adjust the pedal height (see page 19-6).

Turn Signal/Hazard Warning Lights

Component Location Index

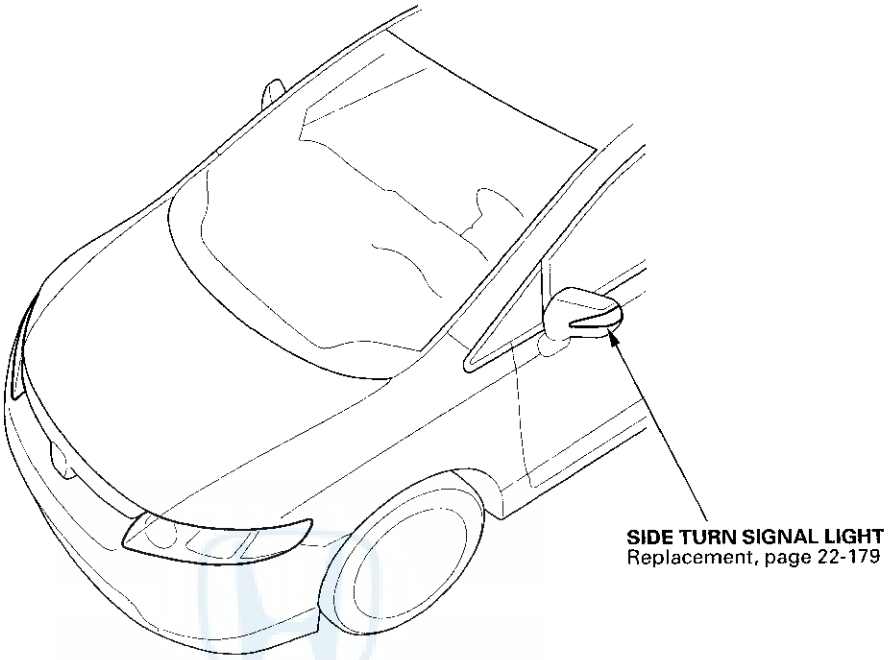

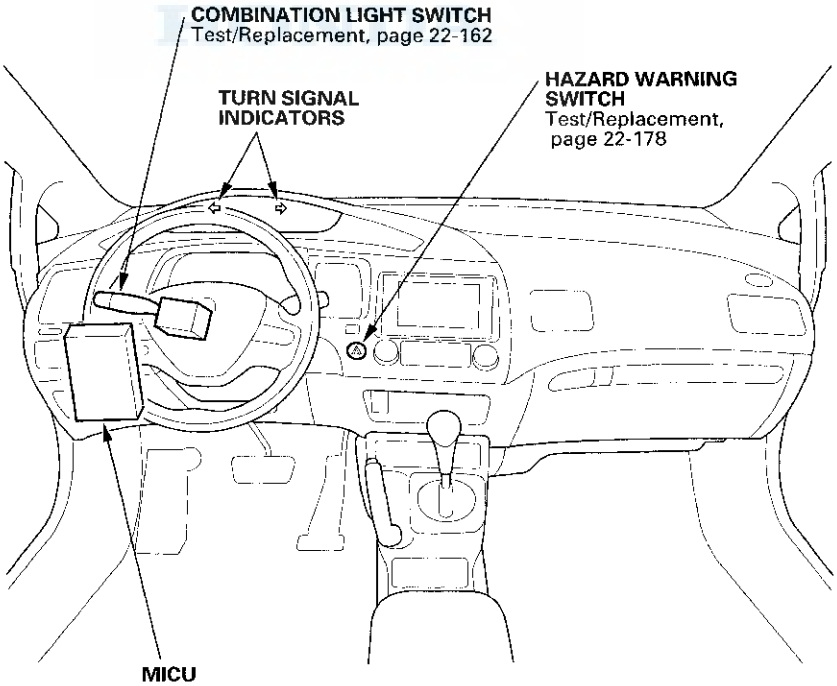

Turn Signal/Hazard Warning Lights

Circuit Diagram

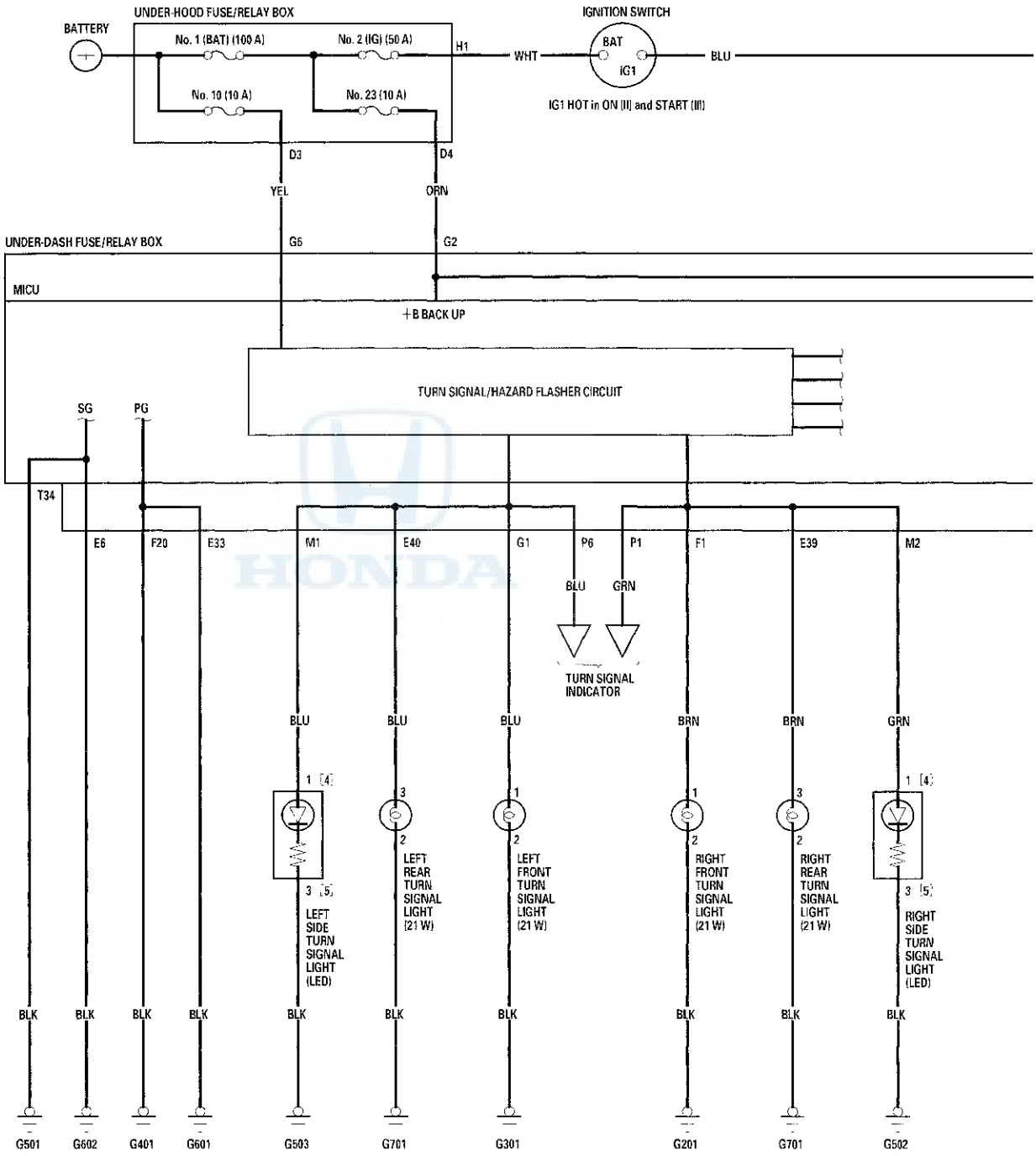

[ ] : With mirror defogger

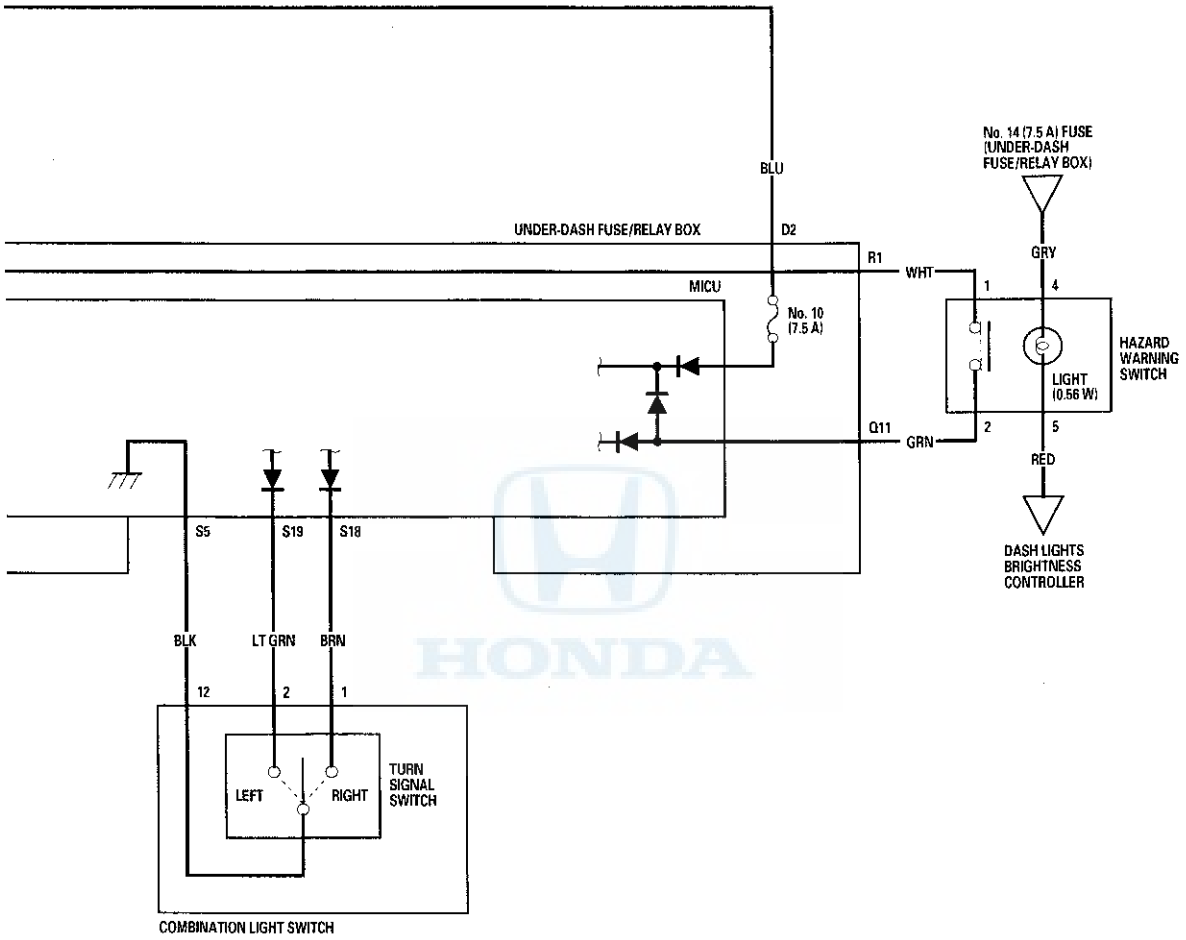

DTC Troubleshooting

DTC B1280: Turn Signal Switch Circuit Malfunction

NOTE: If you are troubleshooting multiple DTCs, be sure to follow the instructions in B-CAN System Diagnosis Test Mode A (see page 22-89).

1. Clear the DTCs with the HDS.
2. Turn the ignition switch to LOCK (0) and then back to ON (II).
3. Operate the turn signal switch in left and right positions, and wait for 6 seconds or more.
4. Check for DTCs with the HDS.

   Is DTC B1280 indicated?

   YES—Go to step 5.

   NO—Intermittent failure, the system is OK at this time. Check for loose or poor connections. ■

5. Select LIGHTING from the BODY ELECTRICAL system select menu, then enter DATA LIST.
6. Check each turn signal switch position value with the DATA LIST menu.

   When the turn signal switch is in left position

Data List	Value
Turn Signal Switch (LEFT)	ON
Turn Signal Switch (RIGHT)	OFF

   When the turn signal switch is in right position

Data List	Value
Turn Signal Switch (LEFT)	OFF
Turn Signal Switch (RIGHT)	ON

   Are all data list values correct?

   YES—Faulty MICU; replace the under-dash fuse/relay box (see page 22-60). ■

   NO—Go to step 7.

7. Disconnect the combination light switch 12P connector.
8. Check each turn signal switch position value with the DATA LIST menu.

   When the turn signal switch is in left position

Data List	Value
Turn Signal Switch (LEFT)	ON
Turn Signal Switch (RIGHT)	OFF

   When the turn signal switch is in right position

Data List	Value
Turn Signal Switch (LEFT)	OFF
Turn Signal Switch (RIGHT)	ON

   Do both values now showing OFF?

   YES—Replace the combination light switch (see page 22-162). ■

   NO—Go to step 9.

9. Turn the ignition switch to LOCK (0).
10. Disconnect under-dash fuse/relay box connector S (20P).

11. Check for continuity between body ground and under-dash fuse/relay box connector S (20P) terminals No. 18 and No. 19 individually.

UNDER-DASH FUSE/RELAY BOX CONNECTOR S (20P)

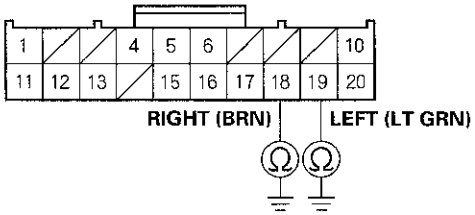

Wire side of female terminals

Is there continuity?

YES—Repair a short to ground in the wire.■

NO—Go to step 12.

12. Check for continuity between under-dash fuse/relay box connector S (20P) terminals No. 18 and No. 19.

UNDER-DASH FUSE/RELAY BOX CONNECTOR S (20P)

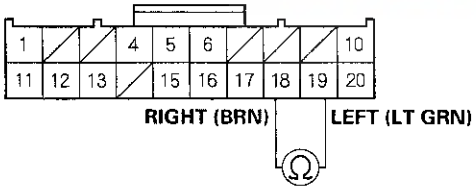

Wire side of female terminals

Is there continuity?

YES—Repair a short between the wires.■

NO—Replace the combination light switch (see page 22-162).■

Turn Signal/Hazard Warning Lights

MICU Input Test

1. Before testing the turn signal/hazard warning lights system, troubleshoot the system using B-CAN System Diagnosis Test Mode A (see page 22-89).

2. Check the No. 10 (7.5 A) fuse in the under-dash fuse/relay box. If the fuse is blown, replace it and go to step 3.

3. Disconnect under-dash fuse/relay box connectors E, F, G, M, P, Q, R, S, and T.

   NOTE: All connector views are shown from wire side of female terminals.

UNDER-DASH FUSE/RELAY BOX CONNECTOR E (42P)

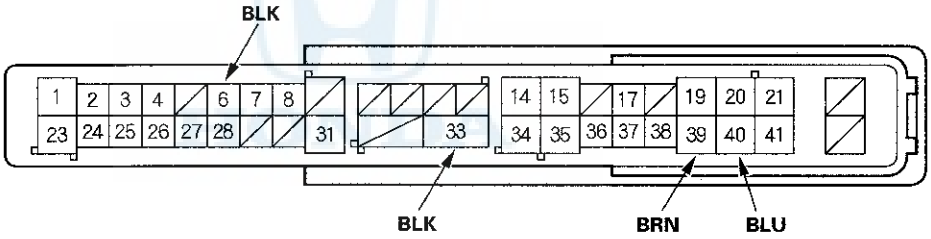

UNDER-DASH FUSE/RELAY BOX CONNECTOR F (34P)

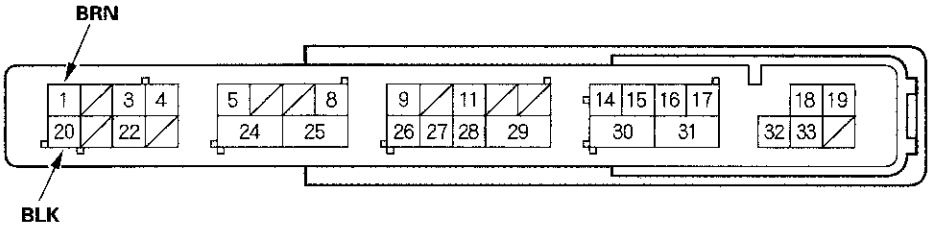

UNDER-DASH FUSE/RELAY BOX CONNECTOR G (21P)

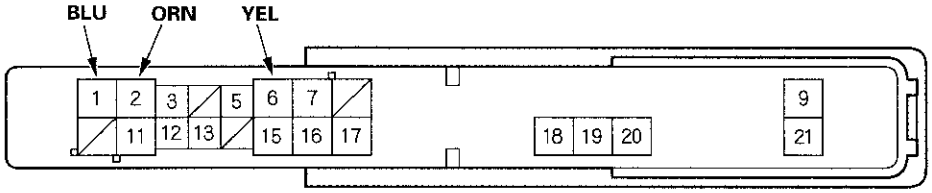

UNDER-DASH FUSE/RELAY BOX
CONNECTOR M (10P)

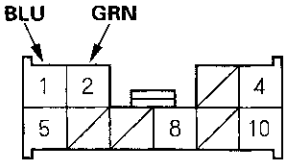

UNDER-DASH FUSE/RELAY BOX
CONNECTOR P (10P)

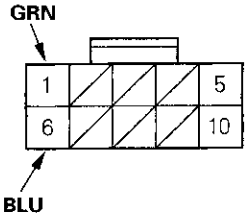

UNDER-DASH FUSE/RELAY BOX
CONNECTOR Q (16P)

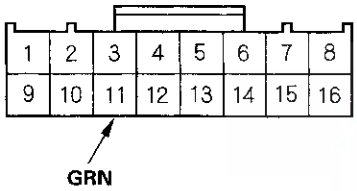

UNDER-DASH FUSE/RELAY BOX
CONNECTOR S (20P)

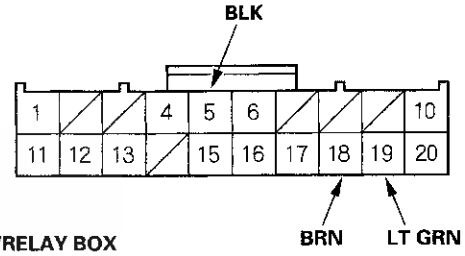

UNDER-DASH FUSE/RELAY BOX
CONNECTOR R (20P)

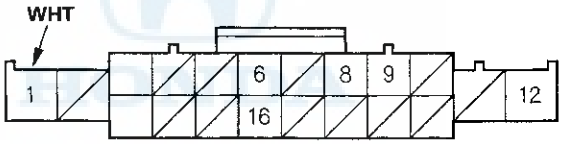

UNDER-DASH FUSE/RELAY BOX
CONNECTOR T (34P)

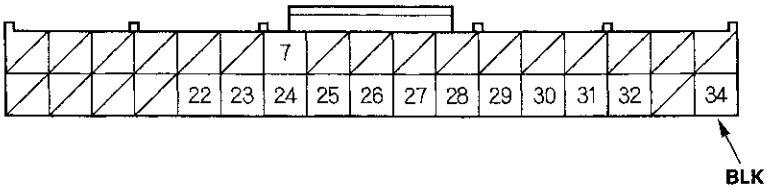

4. Inspect the connector and socket terminals to be sure they are all making good contact.

   - If the terminals are bent, loose or corroded, repair them as necessary and recheck the system.
   - If the terminals look OK, go to step 5.

(cont'd)

MICU Input Test (cont'd)

5. With the connectors still disconnected, do these input tests at the following connectors.

   - If any test indicates a problem, find and correct the cause, then recheck the system.
   - If all the input tests prove OK, go to step 6.

Cavity	Wire	Test condition	Test: Desired result	Possible cause if desired result is not obtained
E39	BRN	Under all conditions	Connect terminals G2 and E39 with a jumper wire: The right rear turn signal light should come on.	• Poor ground (G701) • Blown bulb • An open in the wire
E40	BLU	Under all conditions	Connect terminals G2 and E40 with a jumper wire: The left rear turn signal light should come on.	• Poor ground (G701) • Blown bulb • An open in the wire
F1	BRN	Under all conditions	Connect terminals G2 and F1 with a jumper wire: The right front turn signal light should come on.	• Poor ground (G201) • Blown bulb • An open in the wire
G1	BLU	Under all conditions	Connect terminals G2 and G1 with a jumper wire: The left front turn signal light should come on.	• Poor ground (G301) • Blown bulb • An open in the wire
M1	BLU	Under all conditions	Connect terminals G2 and M1 with a jumper wire: The left side turn signal light should come on.	• Poor ground (G503) • Blown bulb • An open in the wire
M2	GRN	Under all conditions	Connect terminals G2 and M2 with a jumper wire: The right side turn signal light should come on.	• Poor ground (G502) • Blown bulb • An open in the wire
P1	GRN	Under all conditions	Connect terminals G2 and P1 with a jumper wire: The right turn signal indicator should come on.	• Poor ground (G504) • Faulty gauge control module (speedo) • An open in the wire
P6	BLU	Under all conditions	Connect terminals G2 and P6 with a jumper wire: The left turn signal indicator should come on.	• Poor ground (G504) • Faulty gauge control module (speedo) • An open in the wire

6. Reconnect the connectors to the under-dash fuse/relay box, and do these input tests at the following connectors.

- If any test indicates a problem, find and correct the cause, then recheck the system.
- If all the input tests prove OK, the MICU must be faulty; replace the under-dash fuse/relay box.

Cavity	Wire	Test condition	Test: Desired result	Possible cause if desired result is not obtained
G2	ORN	Under all conditions	Measure the voltage between terminal G2 and body ground: There should be battery voltage.	• Blown No. 23 (10 A) fuse in the under-hood fuse/relay box • An open in the wire
G6	YEL	Under all conditions	Measure the voltage between terminal G6 and body ground: There should be battery voltage.	• Blown No. 10 (10 A) fuse in the under-hood fuse/relay box • An open in the wire
E6	BLK	Under all conditions	Measure the voltage to ground: There should be less than 0.5 V.	• Poor ground (G602) • An open in the wire
E33	BLK	Under all conditions	Measure the voltage to ground: There should be less than 0.5 V.	• Poor ground (G601) • An open in the wire
F20	BLK	Under all conditions	Measure the voltage to ground: There should be less than 0.5 V.	• Poor ground (G401) • An open in the wire
T34	BLK	Under all conditions	Measure the voltage to ground: There should be less than 0.5 V.	• Poor ground (G501) • An open in the wire
R1	WHT	Under all conditions	Measure the voltage to ground: There should be battery voltage.	Faulty under-dash fuse/relay box
Q11	GRN	Hazard warning switch pressed	Measure the voltage to ground: There should be battery voltage.	• Faulty hazard warning switch • An open in the wire
S18	BRN	Ignition switch ON (II), turn signal switch in right position	Measure the voltage between terminals S18 and S5: There should be less than 1 V.	• Faulty combination light switch • An open in the wire
		Ignition switch ON (II), turn signal switch in left or neutral position	Measure the voltage between terminals S18 and S5: There should be more than 5 V.	• Faulty combination light switch • A short to ground in the wire
S19	LT GRN	Ignition switch ON (II), turn signal switch in left position	Measure the voltage between terminals S19 and S5: There should be less than 1 V.	• Faulty combination light switch • An open in the wire
		Ignition switch ON (II), turn signal switch in right or neutral position	Measure the voltage between terminals S19 and S5: There should be more than 5 V.	• Faulty combination light switch • A short to ground in the wire

Hazard Warning Switch Test/Replacement

1. Remove the center panel.
   - With audio (see page 23-70).
   - With navigation (see page 23-143).
2. Remove the screws and the hazard warning switch (A).

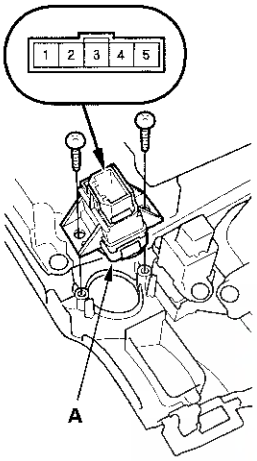

3. Check for continuity between the terminals in each switch position according to the table.

Position \ Terminal	1	2	4		5
OFF			○	—⊗—	○
ON	○	○	○	—⊗—	○

4. If the continuity is not as specified, replace the bulb (A) or the hazard warning switch.

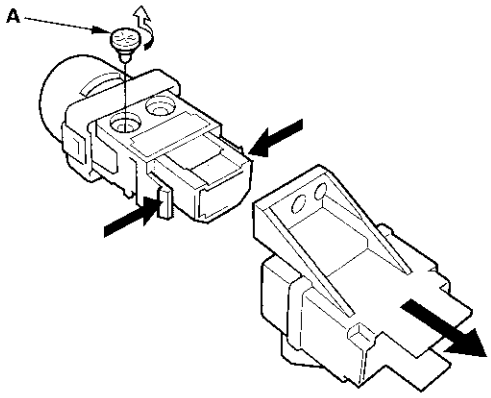

5. Install the hazard warning switch in the reverse order of removal.

Side Turn Signal Light Replacement

1. Remove the mirror holder (see page 20-34).

2. Remove the cover (A) from the mirror (B).

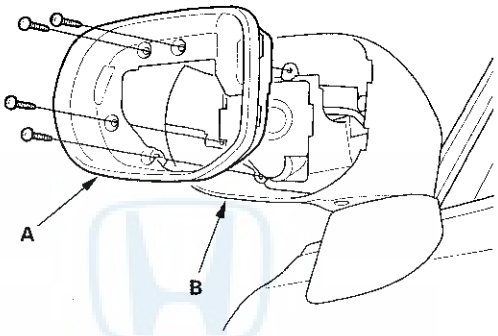

3. Remove the screw, then pull out the side turn signal light (A).

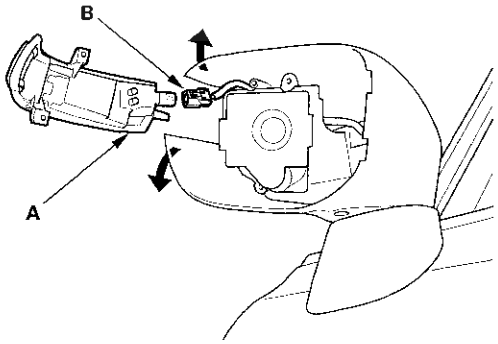

4. Disconnect the 2P connector (B) from the light.

5. Install the side turn signal light in the reverse order of removal.

Interior Lights

Component Location Index

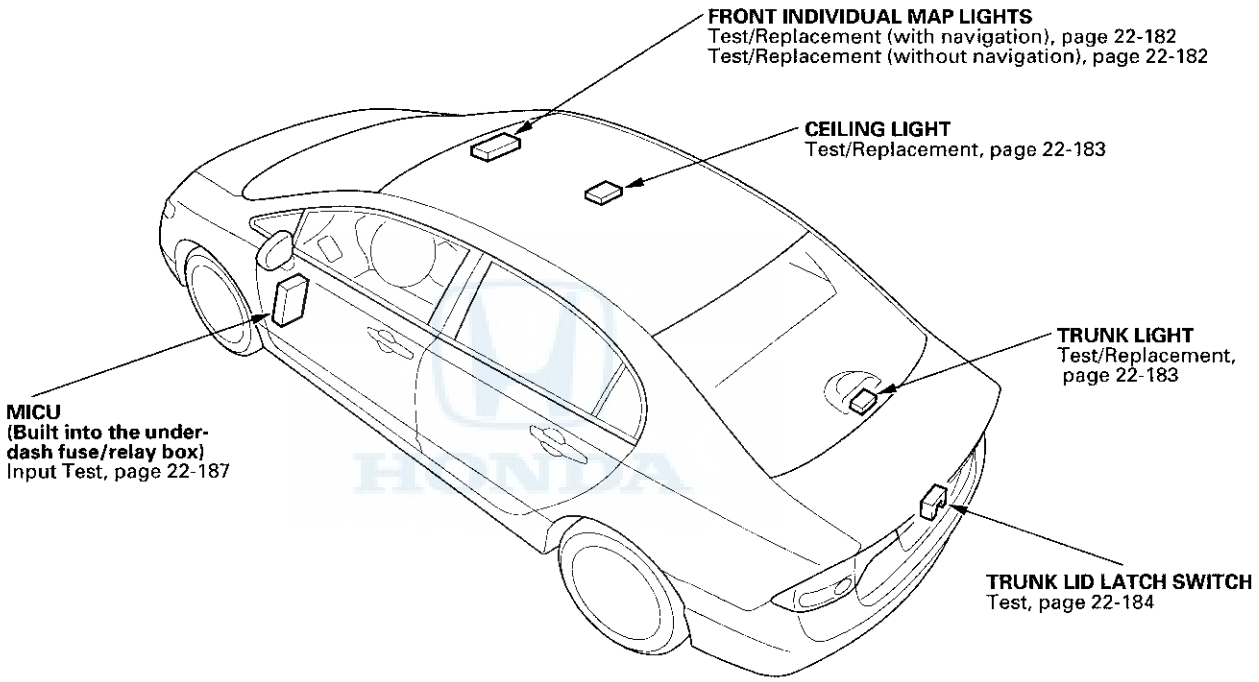

Circuit Diagram

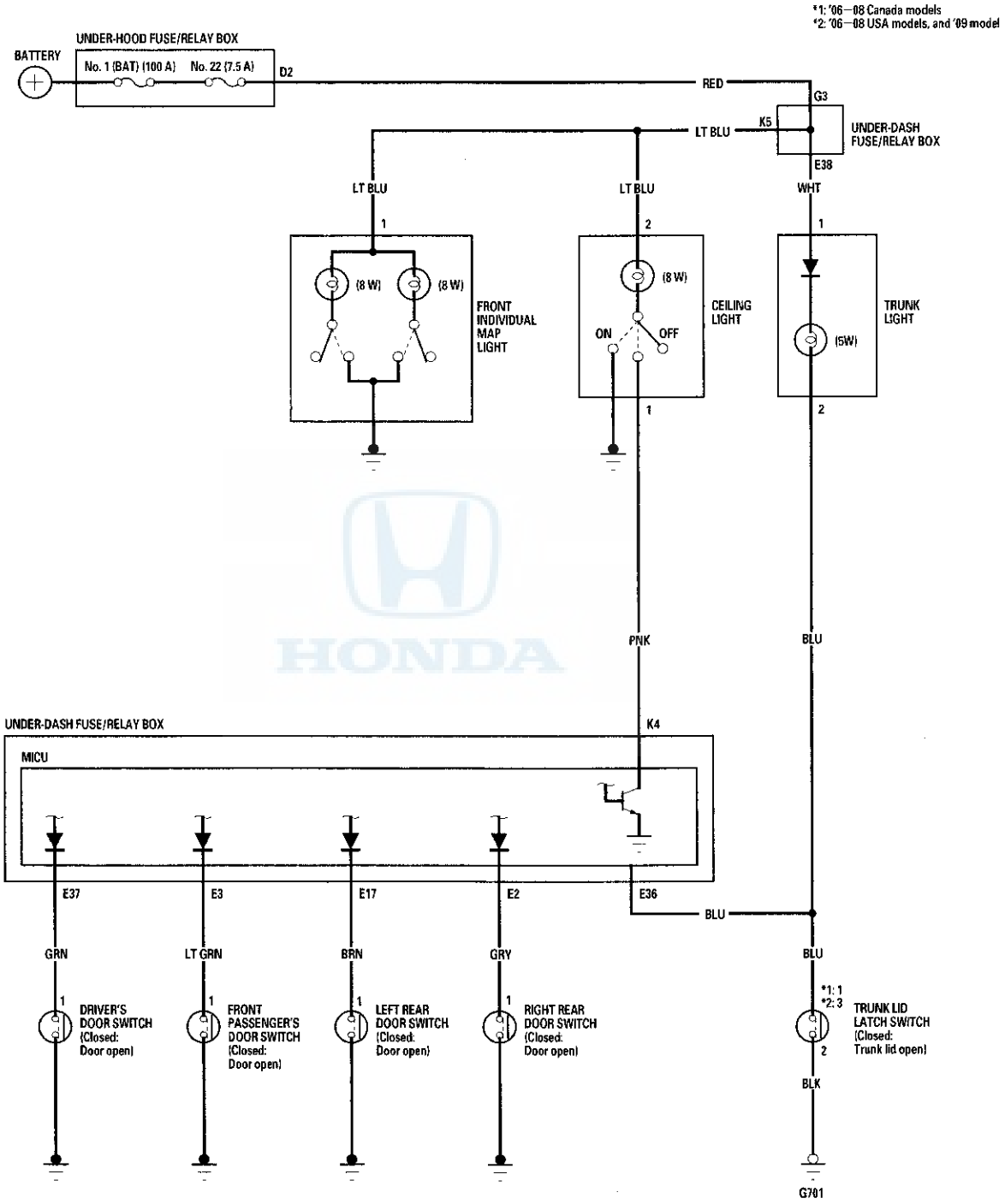

Front Individual Map Light Test/Replacement

With navigation

1. Turn the map light switch OFF.
2. Carefully pry the lens (A) off with a small screwdriver.

   Front Individual Map Light: 8 W x 2

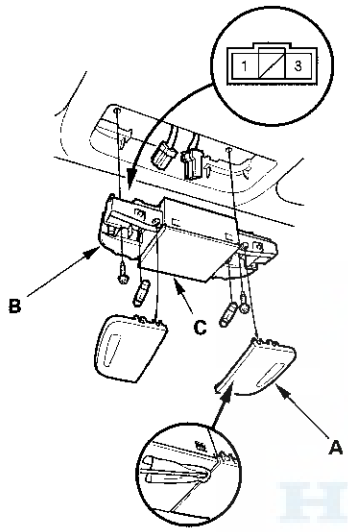

3. Remove the screws, then remove the map lights (B) and navigation microphone (C).
4. Disconnect the 3P connector from the map lights and the 10P connector from the navigation microphone.
5. Check for continuity between the terminals in each switch position according to the table.

Position \ Terminal		1		Body ground
RIGHT	ON	○	⊖	○
	OFF			
LEFT	ON	○	⊖	○
	OFF			

6. If the continuity is not as specified, check the bulb(s). If the bulb(s) are OK, replace the light.
7. Install the map light in the reverse order of removal.

Without navigation

1. Turn the map light switch OFF.
2. Carefully pry the lens (A) off with a small screwdriver.

   Front Individual Map Light: 8 W x 2

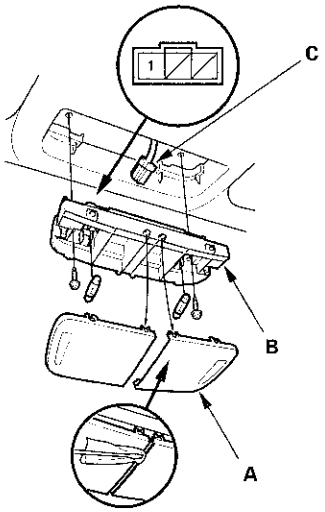

3. Remove the screws, then remove the map lights (B).
4. Disconnect the 3P connector (C) from the map lights.
5. Check for continuity between the terminals in each switch position according to the table.

Position \ Terminal		1		Body ground
RIGHT	ON	○	⊖	○
	OFF			
LEFT	ON	○	⊖	○
	OFF			

6. If the continuity is not as specified, check the bulb(s). If the bulb(s) are OK, replace the light.
7. Install the map light in the reverse order of removal.

Ceiling Light Test/Replacement

1. Turn the ceiling light switch OFF.
2. Carefully pry the lens (A) off with a small screwdriver.

   Ceiling Light: 8 W

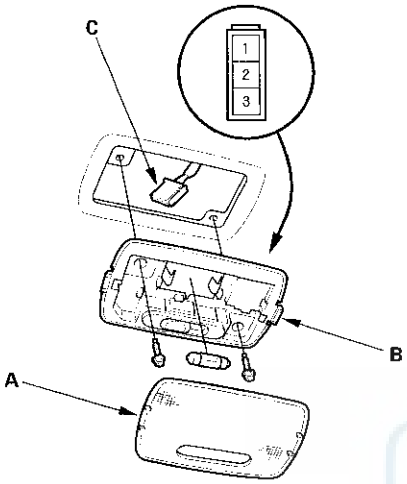

3. Remove the screws, then remove the ceiling light (B).
4. Disconnect the 3P connector (C) from the ceiling light.
5. Check for continuity between the terminals.
   - There should be continuity between terminals No. 1 and No. 2 with the switch in the MIDDLE position.
   - There should be continuity between terminals No. 2 and No. 3 (Body ground) with the switch in the ON position.
   - There should be no continuity between terminals No. 1 and No. 2 and terminals No. 2 and No. 3 (body ground) with the switch in the OFF position.
6. If the continuity is not as specified, check the bulb. If the bulb is OK, replace the light.
7. Install the ceiling light in the reverse order of removal.

Trunk Light Test/Replacement

1. Open the trunk lid.
2. Carefully pry out the trunk light (A).

   Trunk Light: 5 W

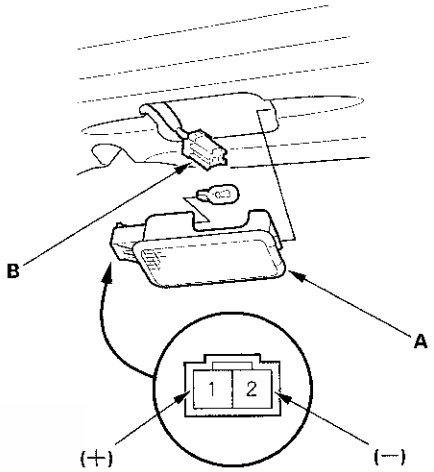

3. Disconnect the 2P connector (B) from the light.
4. Check for continuity between terminals No. 1 (+) and No. 2 (−). There should be continuity. If there is no continuity, check the bulb. If the bulb is OK, replace the trunk light.
5. Install the trunk light in the reverse order of removal.

Trunk Lid Latch Switch Test

1. Open the trunk lid.

2. Disconnect the 2P connector (A) from the trunk lid latch assembly (B).

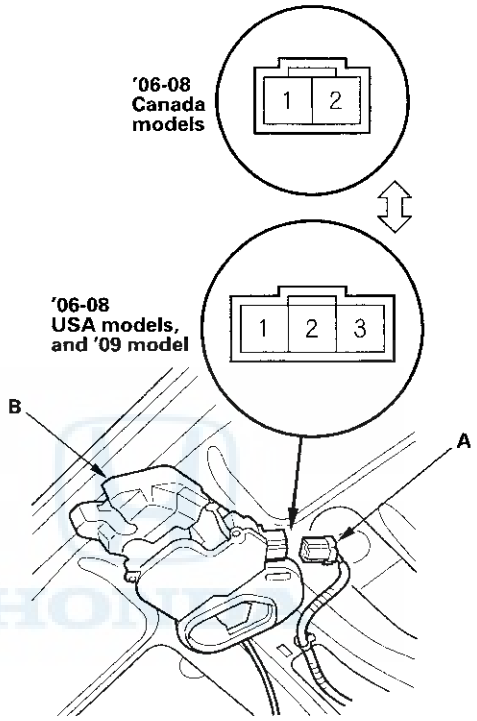

3. Check for continuity between terminals No. 1 (or No. 3*) and No. 2.
   *: '06-08 USA models, and '09 model

   - There should be continuity with the trunk lid open.
   - There should be no continuity with the trunk lid closed.

4. If the continuity is not as specified, replace the trunk lid latch assembly.

Entry Lights Control System

Component Location Index

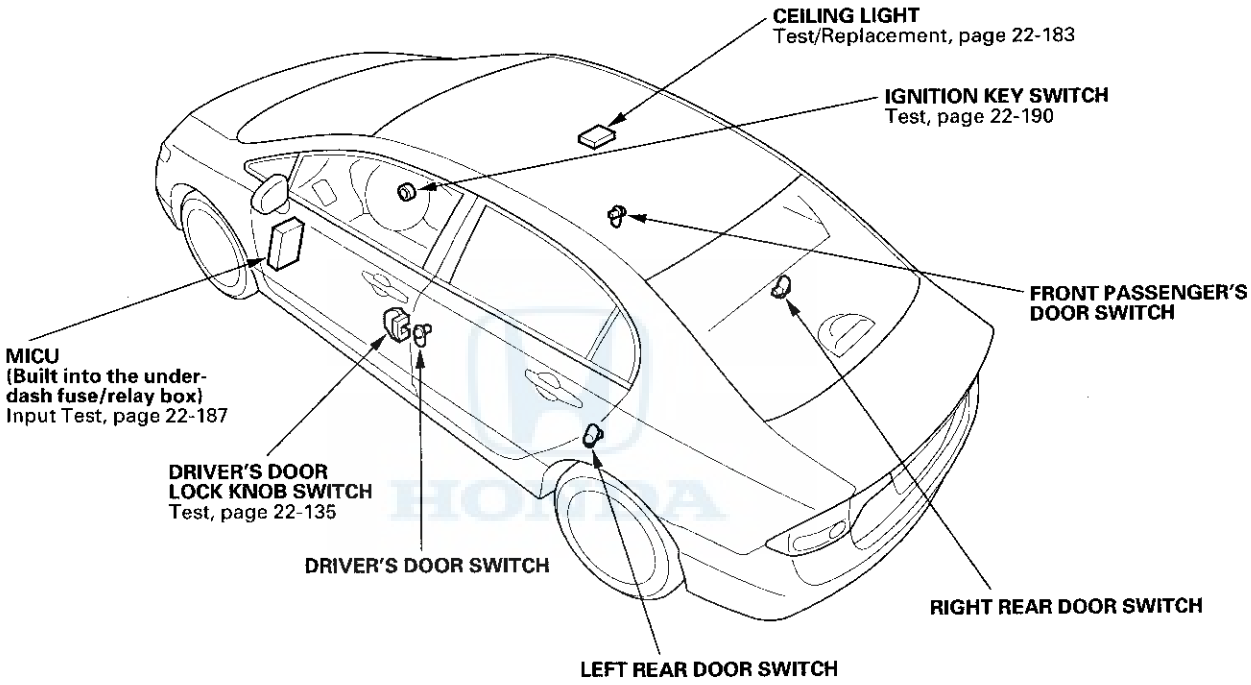

Entry Lights Control System

Circuit Diagram

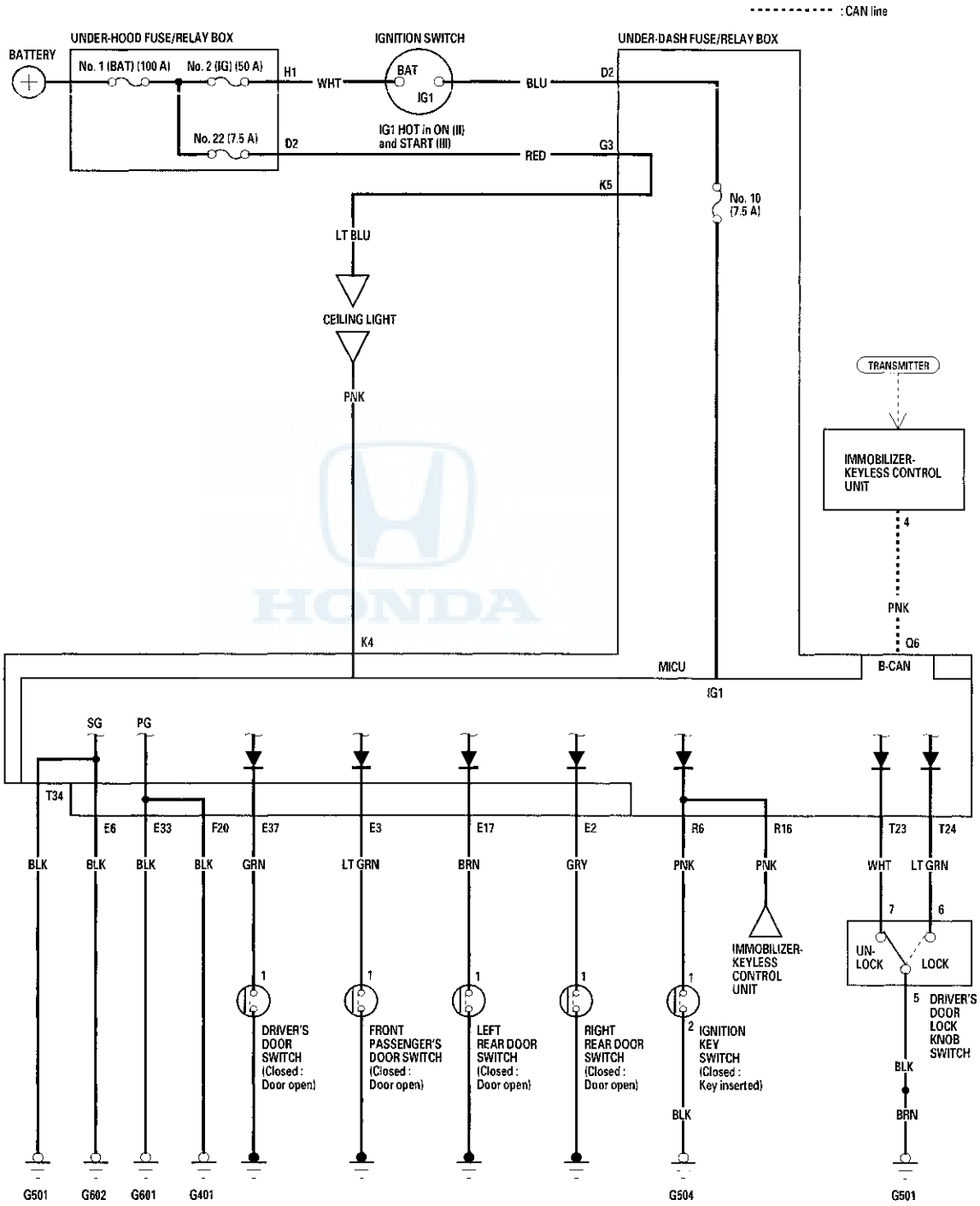

MICU Input Test

1. Before testing the entry lights control system, troubleshoot the system using B-CAN System Diagnosis Test Mode A (see page 22-89).

2. Check the No. 10 (7.5 A) fuse in the under-dash fuse/relay box. If any fuse is blown, replace it and go to step 3.

3. Disconnect driver's under-dash fuse/relay box connectors E, F, K, R, and T.

   NOTE: All connector views are shown from wire side of female terminals.

UNDER-DASH FUSE/RELAY BOX CONNECTOR E (42P)

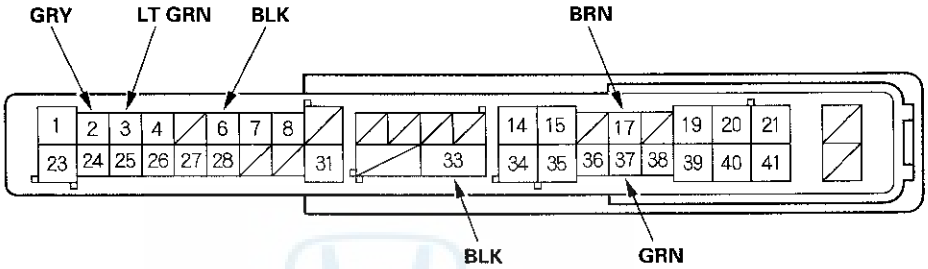

UNDER-DASH FUSE/RELAY BOX CONNECTOR F (34P)

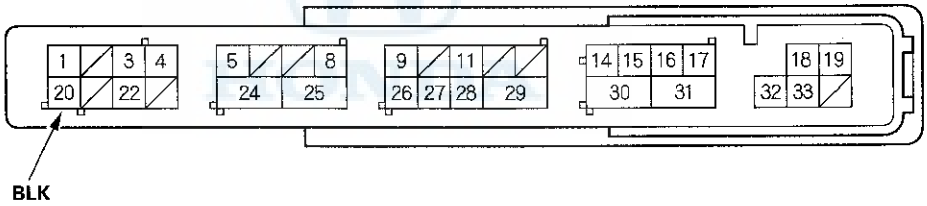

(cont'd)

MICU Input Test (cont'd)

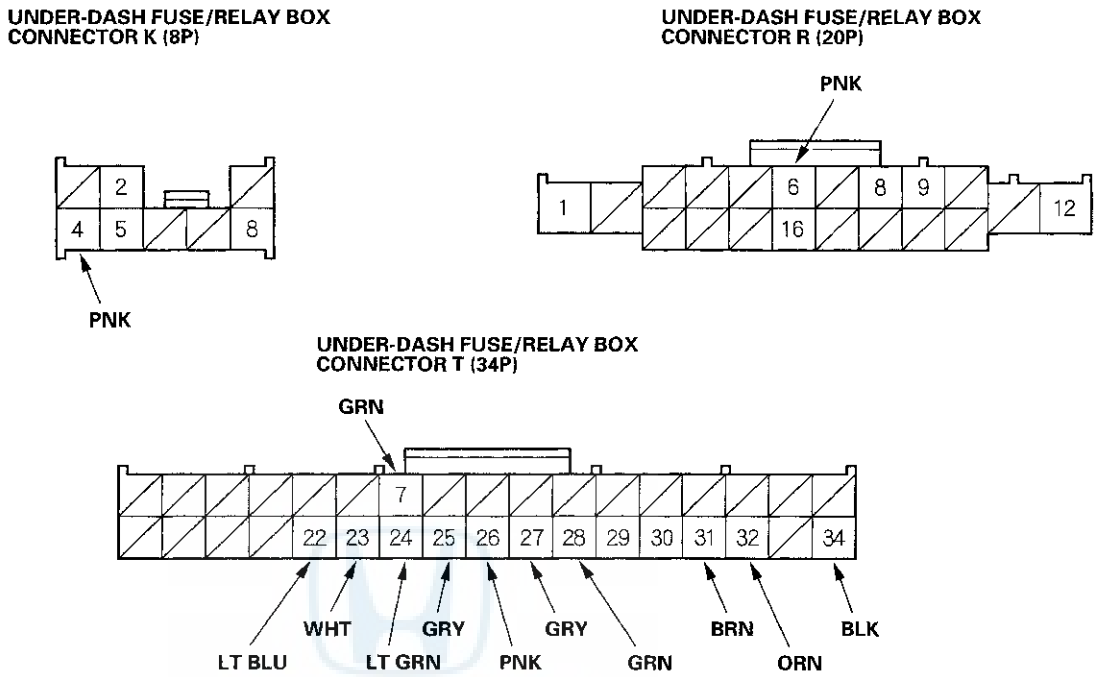

4. Inspect the connector and socket terminals to be sure they are all making good contact.

   - If the terminals are bent, loose or corroded, repair them as necessary and recheck the system.
   - If the terminals look OK, go to step 5.

5. With the connectors still disconnected, do this input test at the following connector.

- If any test indicates a problem, find and correct the cause, then recheck the system.
- If all the input tests prove OK, go to step 6.

Cavity	Wire	Test condition	Test: Desired result	Possible cause if desired result is not obtained
K4	PNK	With the ceiling light switch in the middle position	Attach to ground: The ceiling light and front individual map lights should come on.	• Blown No. 22 (7.5 A) fuse in the under-hood fuse/relay box • Blown bulb(s) • Faulty ceiling light • Faulty front individual map light • An open in the wire

6. Reconnect the connectors to the under-dash fuse/relay box, and do these input tests at the following connectors.

- If any test indicates a problem, find and correct the cause, then recheck the system.
- If all the input tests prove OK, the MICU must be faulty; replace the under-dash fuse/relay box.

Cavity	Wire	Test condition	Test: Desired result	Possible cause if desired result is not obtained
E6	BLK	Under all conditions	Measure the voltage to ground: There should be less than 0.5 V.	• Poor ground (G602) • An open in the wire
E33	BLK	Under all conditions	Measure the voltage to ground: There should be less than 0.5 V.	• Poor ground (G601) • An open in the wire
F20	BLK	Under all conditions	Measure the voltage to ground: There should be less than 0.5 V.	• Poor ground (G401) • An open in the wire
T34	BLK	Under all conditions	Measure the voltage to ground: There should be less than 0.5 V.	• Poor ground (G501) • An open in the wire
E2	GRY	Right rear door open	Measure the voltage to ground: There should be less than 1 V.	• Faulty right rear door switch • An open in the wire
		Right rear door closed	Measure the voltage to ground: There should be more than 5 V.	• Faulty right rear door switch • A short to ground in the wire
E3	LT GRN	Front passenger's door open	Measure the voltage to ground: There should be less than 1 V.	• Faulty front passenger's door switch • An open in the wire
		Front passenger's door closed	Measure the voltage to ground: There should be more than 5 V.	• Faulty front passenger's door switch • A short to ground in the wire
E17	BRN	Left rear door open	Measure the voltage to ground: There should be less than 1 V.	• Faulty left rear door switch • An open in the wire
		Left rear door closed	Measure the voltage to ground: There should be more than 5 V.	• Faulty left rear door switch • A short to ground in the wire
E37	GRN	Driver's door open	Measure the voltage to ground: There should be less than 1 V.	• Faulty driver's door switch • An open in the wire
		Driver's door closed	Measure the voltage to ground: There should be more than 5 V.	• Faulty driver's door switch • A short to ground in the wire
R6	PNK	Ignition key inserted into the ignition switch	Measure the voltage to ground: There should be less than 1 V.	• Poor ground (G504) • Faulty ignition key switch • An open in the wire
		Ignition switch to LOCK (0) and ignition key removed from the ignition switch	Measure the voltage to ground: There should be more than 5 V.	• Faulty ignition key switch • A short to ground in the wire
T23	WHT	Driver's door lock knob switch unlocked	Measure the voltage to ground: There should be less than 1 V.	• Poor ground (G501) • Faulty driver's door lock knob switch • An open in the wire

Ignition Key Switch Test

1. Remove the steering column upper and lower covers (see page 17-10).

2. Disconnect the 6P connector.

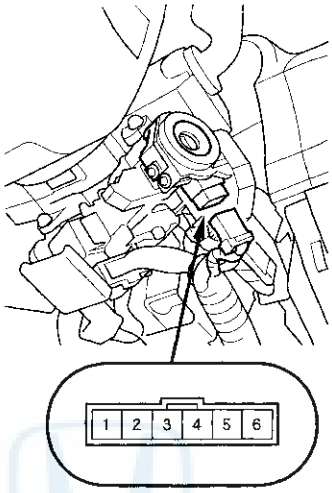

3. Check for continuity between terminals No. 1 and No. 2.

   - There should be continuity with the key in the ignition switch.
   - There should be no continuity with the key removed.

4. If the continuity is not as specified, replace the ignition switch.

Component Location Index

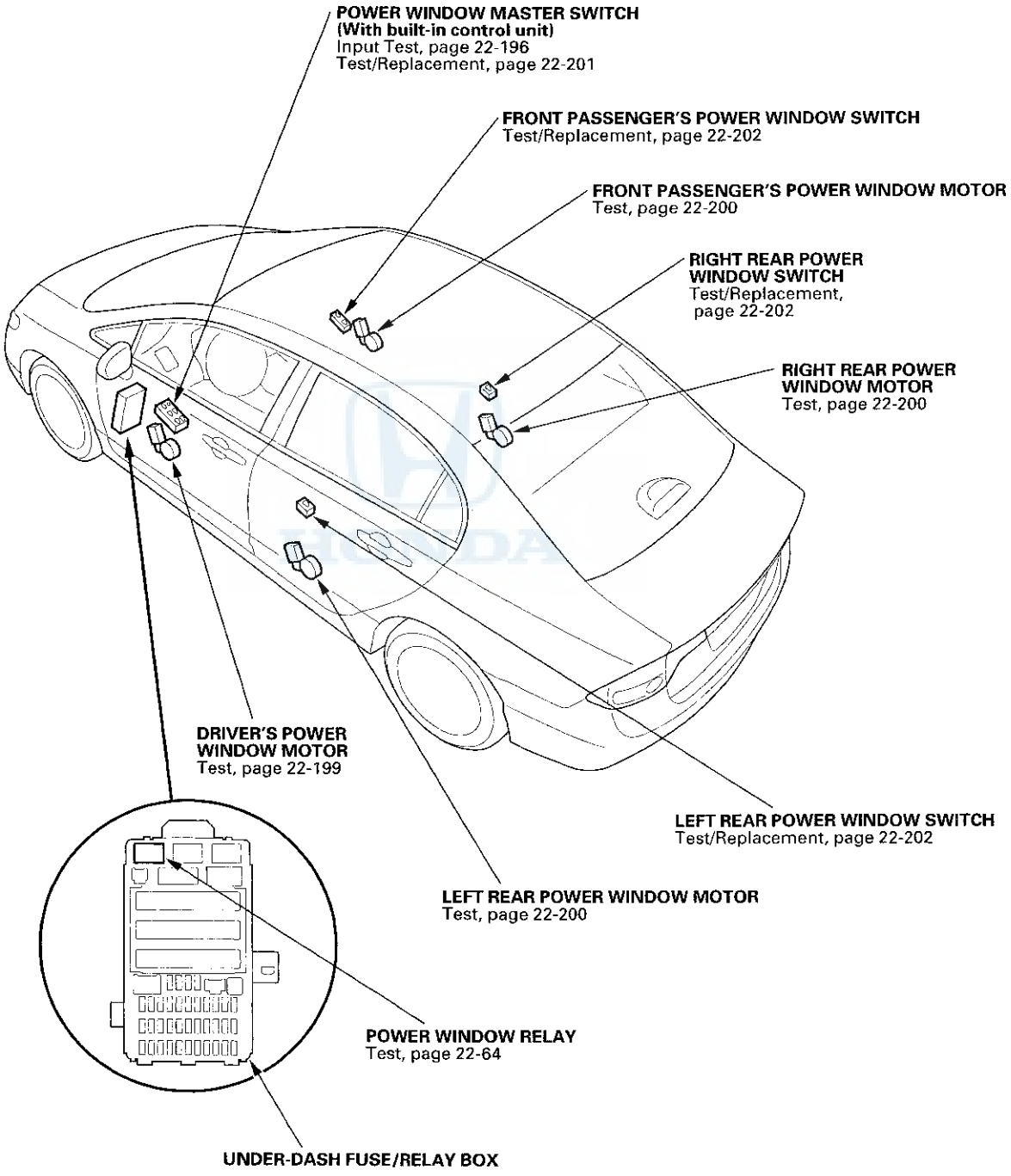

System Description

Auto Reverse Operation

The system is composed of the power window master switch and the driver's power window motor.

The driver's power window motor incorporates a Hall IC unit which generates pulses during the motor's operation and sends the pulses to the driver's power window control unit. As soon as the power window control unit detects a change in the pulse frequency from the Hall IC unit, the driver's power window control unit makes the power window motor stop and reverse. If the window is more than halfway closed, it will reverse to half open position. If the window is less than halfway closed, it will stop and reverse about 2 inches. This prevents pinching your hand or fingers during auto-up operation. The auto reverse operation is not active when the switch is held in the up position.

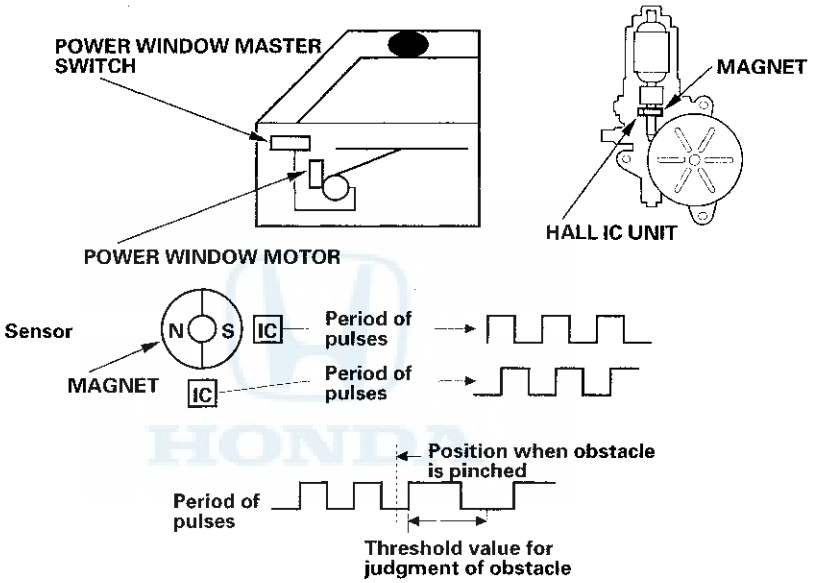

Resetting the Power Window Control Unit

Resetting the driver's power window is required when any of the following have occurred:

- Power window regulator replacement or repair
- Power window motor replacement or repair
- Window run channel replacement or repair
- Driver's door glass replacement or repair
- Power is removed from the power window control unit while the power window timer is ON.

1. Turn the ignition switch to ON (II).
2. Move the driver's window all the way down by using the driver's window DOWN switch.
3. Open the driver's door.

   NOTE: Steps 4—7 must be done within 5 seconds of each other.
4. Turn the ignition switch to LOCK (0).
5. Push and hold the driver's window DOWN switch.
6. Turn the ignition switch to ON (II).
7. Release the driver's window DOWN switch.
8. Repeat step 4—7 three more times.
9. Wait 1 second.
10. Check if the AUTO UP and AUTO DOWN functions still work. If they do, the auto function has not been cleared; go back to step 1. If they do not, go to step 11.
11. Move the driver's window all the way down by using the driver's window DOWN switch.
12. Pull up and hold the driver's window UP switch until the window reaches the fully closed position, then continue to hold the switch for 1 second.
13. Confirm that the power window control unit is reset by using the driver's window AUTO UP and AUTO DOWN functions.

    If the window still does not work in AUTO, repeat the procedure several times, paying close attention to the 5 second time limit between steps. If it still does not work, refer to the master switch input test (see page 22-196).

Circuit Diagram

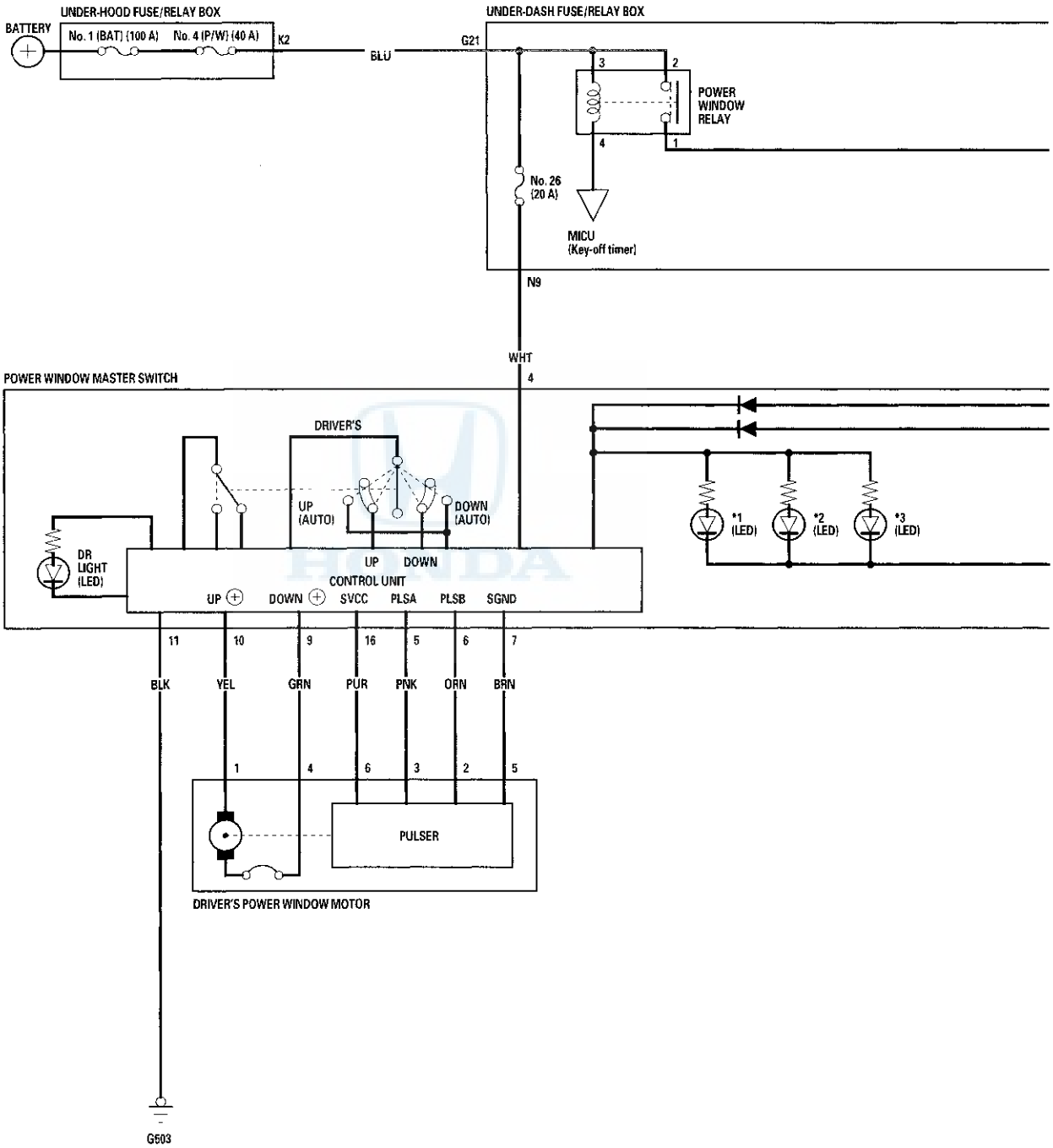

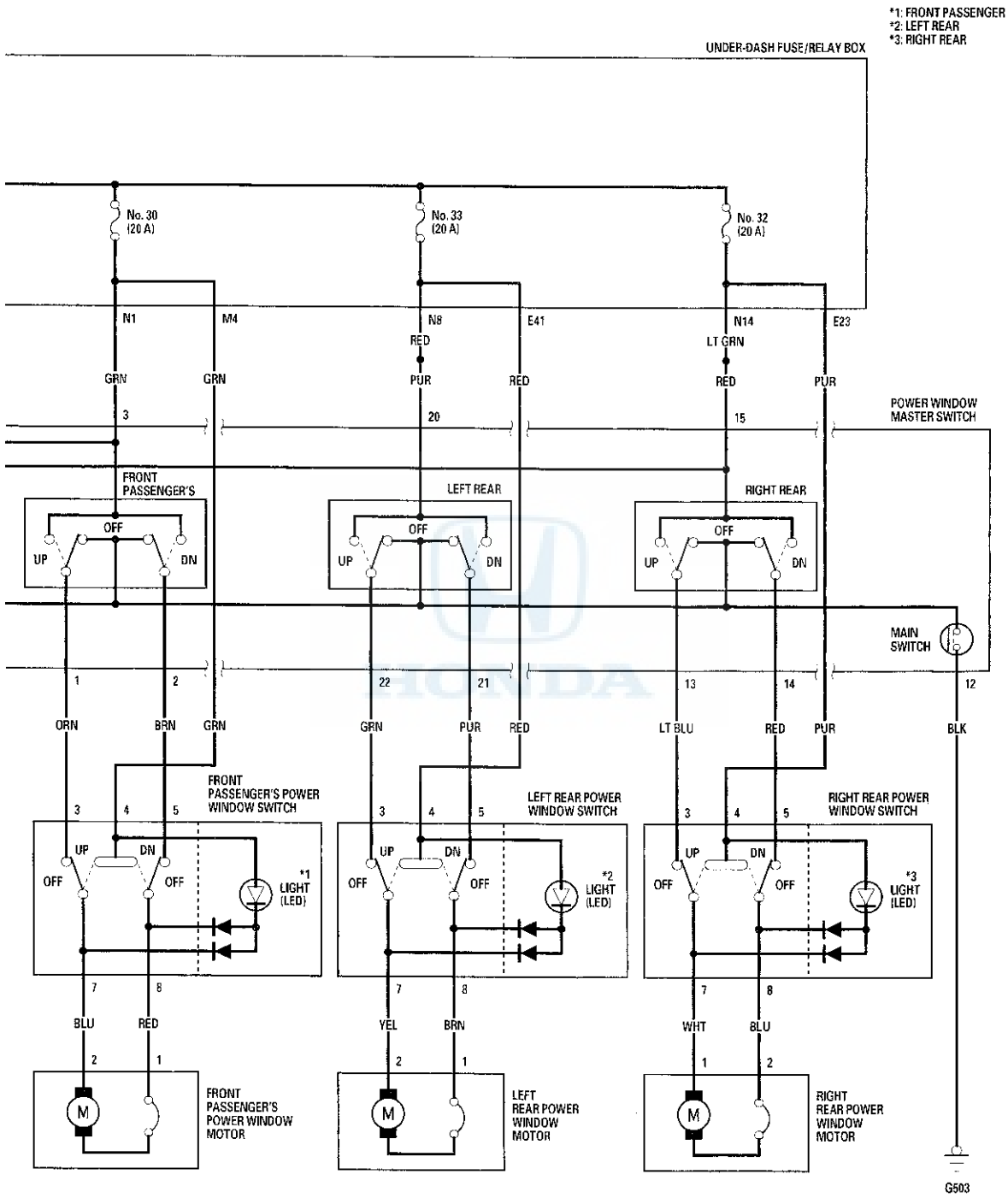
*1: FRONT PASSENGER
*2: LEFT REAR
*3: RIGHT REAR
UNDER-DASH FUSE/RELAY BOX
No. 30 (20 A)
No. 33 (20 A)
No. 32 (20 A)
N1
M4
N8
E41
N14
E23
RED
LT GRN
GRN
GRN
PUR
RED
RED
PUR
3
20
15
POWER WINDOW MASTER SWITCH
FRONT PASSENGER'S
LEFT REAR
RIGHT REAR
OFF
UP
DN
MAIN SWITCH
1
2
22
21
13
14
12
ORN
BRN
GRN
GRN
PUR
RED
LT BLU
RED
PUR
BLK
FRONT PASSENGER'S POWER WINDOW SWITCH
LEFT REAR POWER WINDOW SWITCH
RIGHT REAR POWER WINDOW SWITCH
3
4
5
*1 LIGHT (LED)
*2 LIGHT (LED)
*3 LIGHT (LED)
7
8
BLU
RED
YEL
BRN
WHT
BLU
2
1
M
FRONT PASSENGER'S POWER WINDOW MOTOR
LEFT REAR POWER WINDOW MOTOR
RIGHT REAR POWER WINDOW MOTOR
G503

Power Window Master Switch Input Test

NOTE: The power window control unit is built into the power window master switch, and it only controls the driver's window operations.

1. Remove the master switch (A) (see page 22-201).

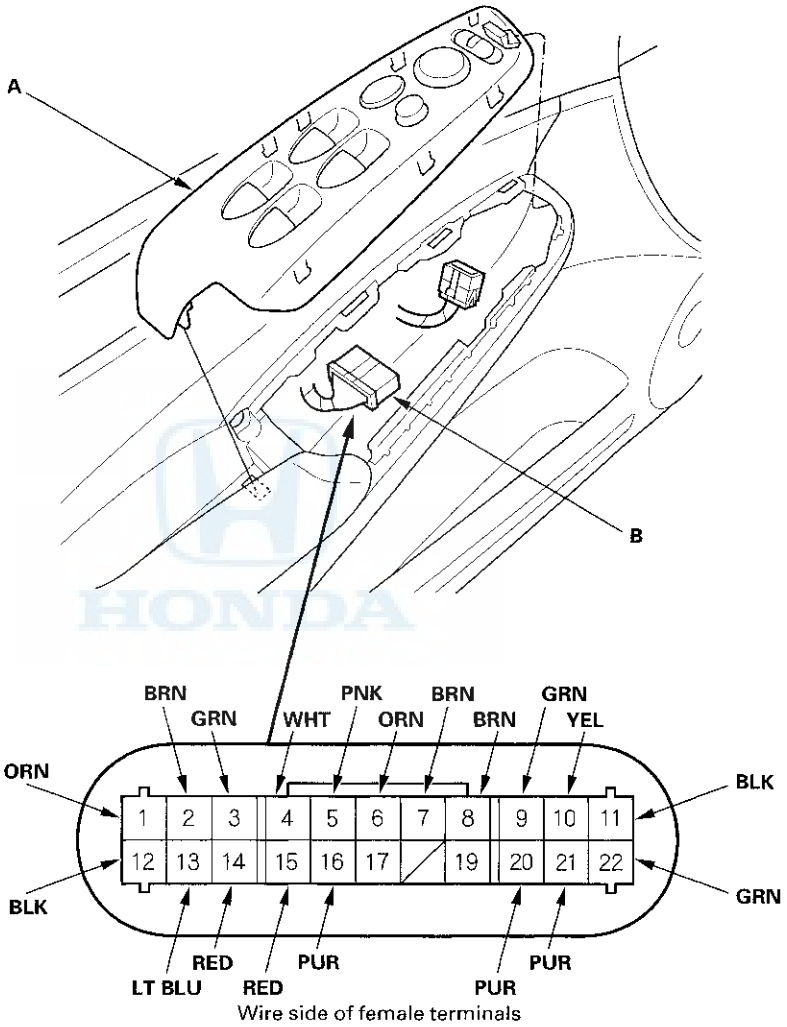

2. Disconnect the 22P connector (B) from the master switch.

3. Inspect the connector and socket terminals to be sure they are all making good contact.

   - If the terminals are bent, loose or corroded, repair them as necessary, and recheck the system.
   - If the terminals look OK, go to step 4.

4. With the master switch still disconnected, do these input tests at the following connector.

- If any test indicates a problem, find and correct the cause, then recheck the system.
- If all the input tests prove OK, go to step 5.

Cavity	Wire	Test condition	Test: Desired result	Possible cause if desired result is not obtained
9	GRN	Connect terminals No. 4 and No. 9, and terminals No. 10 and No. 11 momentarily with jumper wires	Check driver's power window motor operation: The window should go down.	• Faulty driver's power window motor • An open in the wire
10	YEL	Connect terminals No. 4 and No. 10, and terminals No. 9 and No. 11 momentarily with jumper wires	Check driver's power window motor operation: The window should go up.	
1	ORN	Connect terminals No. 3 and No. 2, and terminals No. 1 and No. 12 momentarily with jumper wires	Check front passenger's power window motor operation: The window should go down.	• Faulty front passenger's power window motor • Faulty front passenger's power window switch • An open in the wire
2	BRN	Connect terminals No. 3 and No. 1, and terminals No. 2 and No. 12 momentarily with jumper wires	Check front passenger's power window motor operation: The window should go up.	
13	LT BLU	Connect terminals No. 15 and No. 14, and terminals No. 13 and No. 12 momentarily with jumper wires	Check right rear power window motor operation: The window should go down.	• Faulty right rear power window motor • Faulty right rear power window switch • An open in the wire
14	RED	Connect terminals No. 15 and No. 13, and terminals No. 14 and No. 12 momentarily with jumper wires	Check right rear power window motor operation: The window should go up.	
21	PUR	Connect terminals No. 20 and No. 21, and terminals No. 22 and No. 12 momentarily with jumper wires	Check left rear power window motor operation: The window should go down.	• Faulty left rear power window motor • Faulty left rear power window switch • An open in the wire
22	GRN	Connect terminals No. 20 and No. 22, and terminals No. 21 and No. 12 momentarily with jumper wires	Check left rear power window motor operation: The window should go up.	

(cont'd)

Power Window Master Switch Input Test (cont'd)

5. Reconnect the 22P connector to the power window master switch. Turn the ignition switch to ON (II), and do these input tests at the following connector.
   - If any test indicates a problem, find and correct the cause, then recheck the system.
   - If all the input tests prove OK, the control unit must be faulty; replace the power window master switch.

Cavity	Wire	Test condition	Test: Desired result	Possible cause if desired result is not obtained
3	GRN	Ignition switch ON (II)	Measure the voltage to ground: There should be battery voltage.	• Blown No. 30 (20 A) fuse in the under-dash fuse/relay box • Faulty power window relay • Faulty MICU • An open in the wire
4	WHT	Under all conditions	Measure the voltage to ground: There should be battery voltage.	• Blown No. 26 (20 A) fuse in the under-dash fuse/relay box • An open in the wire
15	RED	Ignition switch ON (II)	Measure the voltage to ground: There should be battery voltage.	• Blown No. 32 (20 A) fuse in the under-dash fuse/relay box • Faulty power window relay • Faulty MICU • An open in the wire
20	PUR	Ignition switch ON (II)	Measure the voltage to ground: There should be battery voltage.	• Blown No. 33 (20 A) fuse in the under-dash fuse/relay box • Faulty power window relay • Faulty MICU • An open in the wire
7	BRN	Under all conditions	Measure the voltage to ground: There should be less than 1 V.	• Poor ground (G503) • An open in the wire
11	BLK	Ignition switch ON (II), and driver's power window moving up or down	Measure the voltage to ground: There should be less than 1 V.	• Poor ground (G503) • An open in the wire
12	BLK	Ignition switch ON (II), main switch on, and a passenger's power window moving up or down	Measure the voltage to ground: There should be less than 1 V.	• Poor ground (G503) • An open in the wire
16	PUR	Ignition switch ON (II)	Measure the voltage to ground: There should be battery voltage.	• Faulty power window master switch • A short to ground in the wire
5	PNK	Ignition switch ON (II), and driver's power window switch moving up or down	Measure the voltage between terminals No. 5 and No. 7: There should be 0 V—about 5 V—0 V— about 5 V repeatedly (a digital voltmeter should read about 2.5 V while the window moves).	• Faulty power window master switch • Faulty driver's power window motor • An open in the wire • A short to ground in the wire
6	ORN	Ignition switch ON (II), and driver's power window switch moving up or down	Measure the voltage between terminals No. 6 and No. 7: There should be 0 V—about 5 V—0 V— about 5 V repeatedly (a digital voltmeter should read about 2.5 V while the window moves).	

6. Reset the power window control unit (see page 22-193).

Driver's Power Window Motor Test

1. Remove the door panel (see page 20-7).

2. Disconnect the 6P connector from the driver's power window motor.

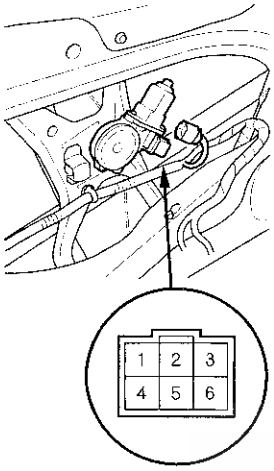

Motor Test

3. Test the motor in each direction by connecting battery power and ground according to the table. When the motor stops running, disconnect one lead immediately.

Terminal / Direction	1	4
UP	⊕	⊖
DOWN	⊖	⊕

4. If the motor does not run or fails to run smoothly, replace it.

Pulser Test

5. Reconnect the 6P connector to the driver's power window motor.

6. Turn the ignition switch to ON (II).

7. Measure the voltage between terminals.

   - There should be battery voltage between terminals No. 6 (+) and No. 5 (−).
   - Connect an analog voltmeter between terminals No. 3 (+) and No. 5 (−), and run the power window motor down or up. The voltmeter needle should move back and forth alternately between 0 V and about 5 V (a digital voltmeter reads about 2.5 V).
   - Connect an analog voltmeter between terminals No. 2 (+) and No. 5 (−), and run the power window motor down or up. The voltmeter needle should move back and forth alternately between 0 V and about 5 V (a digital voltmeter reads about 2.5 V).

8. If the voltage is not as specified, do the power window switch input test terminals No. 5, 6, 7, and 16 (see page 22-196).

9. If the switch is OK, replace the power window motor.

10. Reset the power window control unit (see page 22-193).

Passenger's Power Window Motor Test

1. Remove the door panel (see page 20-7).

2. Disconnect the 2P connector from the power window motor.

   NOTE: The illustration shows the left rear power window motor.

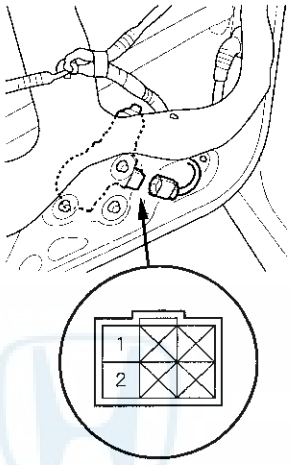

3. Test the motor by connecting battery power and ground according to the table. When the motor stops running, disconnect one lead immediately.

Terminal / Direction	2 [1]	1 [2]
UP	⊕	⊖
DOWN	⊖	⊕

[ ] : **Right rear power window motor**

4. If the motor does not run or fails to run smoothly, replace it.

Power Window Master Switch Test/Replacement

1. Carefully pry out the power window master switch (A).

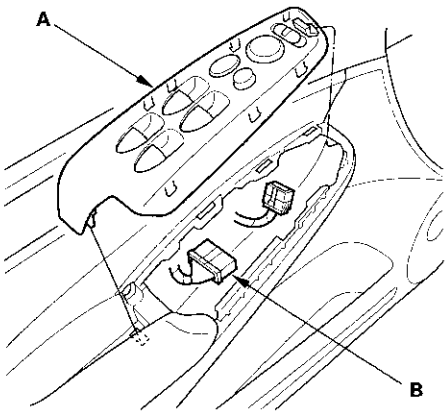

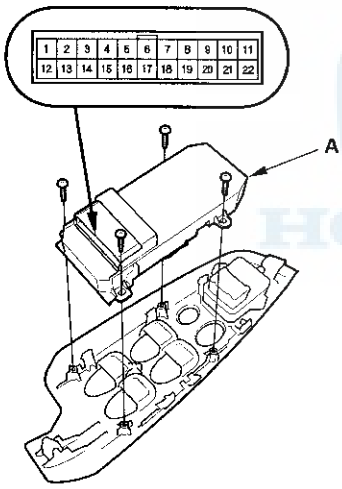

2. Disconnect the 20P connector (B) from the power window master switch.

3. Check for continuity between the terminals in each switch position according to the tables.

Driver's Switch

The driver's switch is combined with the control unit so you cannot isolate the switch to test it. Instead, run the master switch input test procedures (see page 22-196). If the tests are normal, the driver's switch must be faulty. Replace the switch.

Front Passenger's Switch

Position	Main Switch \ Terminal	1	2	3	12
OFF	ON	○	○		○
	OFF	○	○		
UP	ON	○		○	
			○		○
	OFF	○		○	
DOWN	ON		○	○	
		○			○
	OFF		○	○	

Left Rear Switch

Position	Main Switch \ Terminal	20	21	22	12
OFF	ON		○	○	○
	OFF		○	○	
UP	ON	○		○	
			○		○
	OFF	○		○	
DOWN	ON	○	○	○	○
	OFF	○	○		

Right Rear Switch

Position	Main Switch \ Terminal	13	14	15	12
OFF	ON	○	○		○
	OFF	○	○		
UP	ON	○		○	
			○		○
	OFF	○		○	
DOWN	ON		○	○	
		○			○
	OFF		○	○	

4. If the continuity is not as specified, remove the screws and replace the switch.

5. Install the power window master switch in the reverse order of removal.

Passenger's Power Window Switch Test/Replacement

1. Remove the passenger's power window switch (A).

Front passenger's

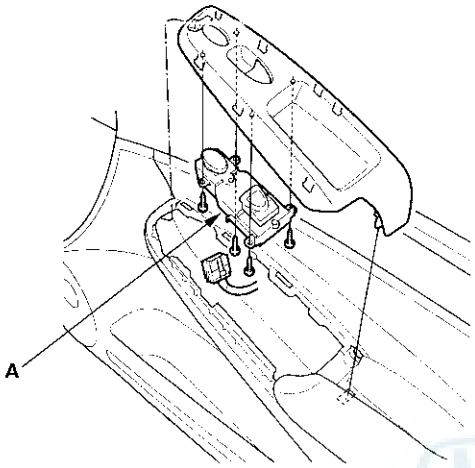

Rear

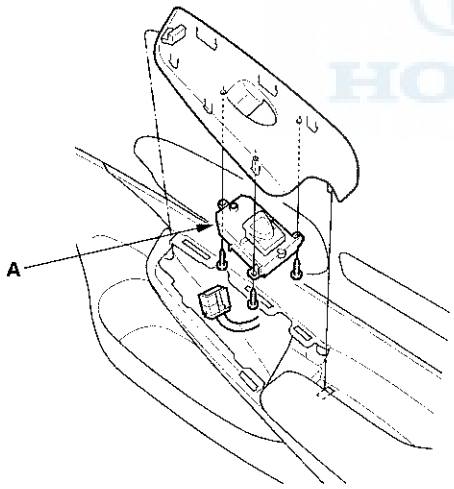

NOTE: The illustration shows the front passenger's door.

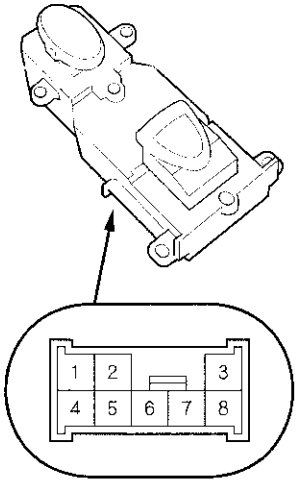

2. Check for continuity between the terminals in each switch position according to the table.

Position \ Terminal	3	4	5	7	8
OFF	○		○	○	○
UP		○	○	○	○
DOWN	○	○		○	○

3. Connect battery power to terminal No. 4 and ground terminal No. 7 (or No. 8). The switch light should come on.

4. If the continuity or switch light tests is not as specified, remove the screws and replace the switch.

5. Install the passenger's power window switch in the reverse order of removal.

Component Location Index

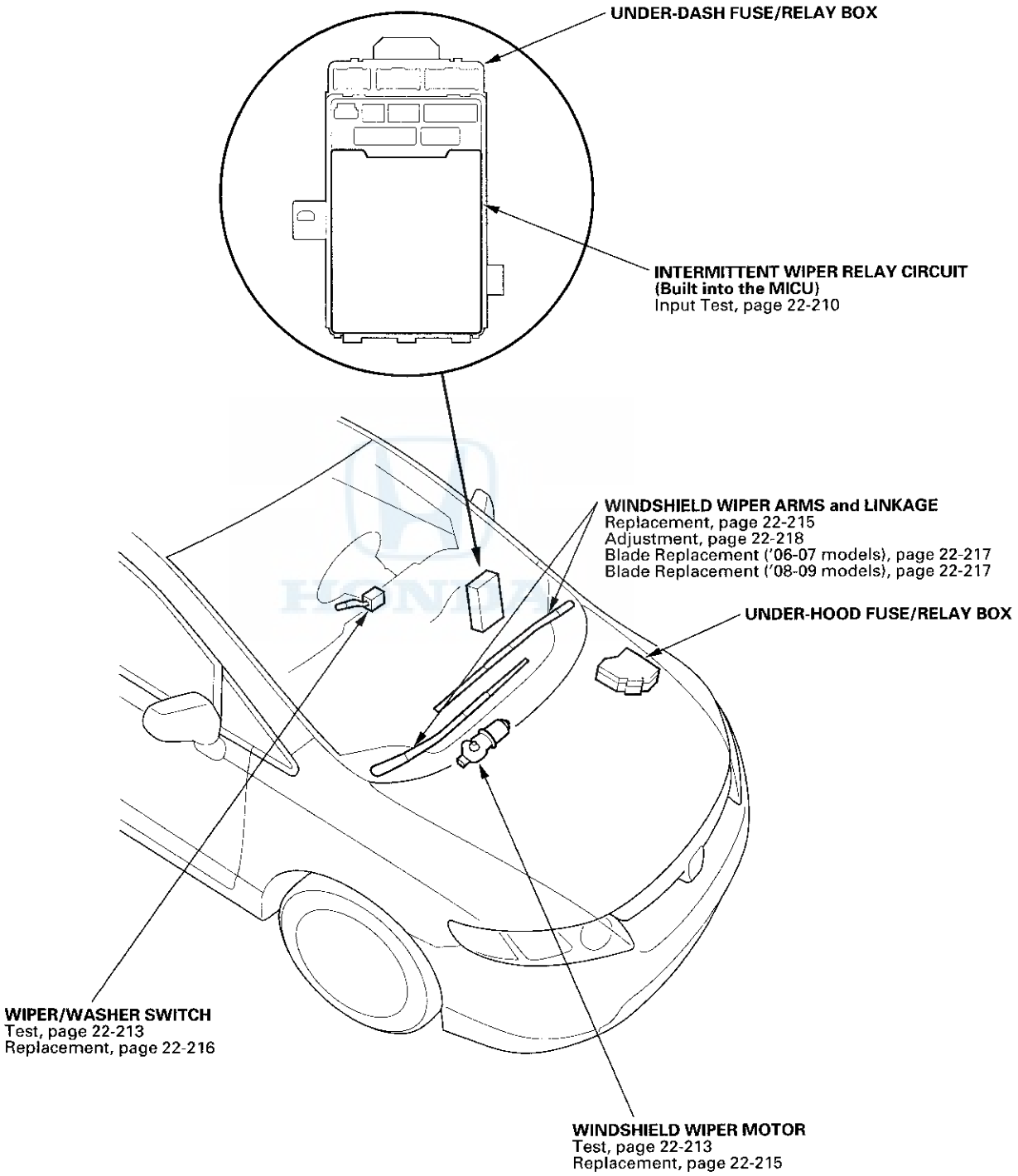

(cont'd)

Component Location Index (cont'd)

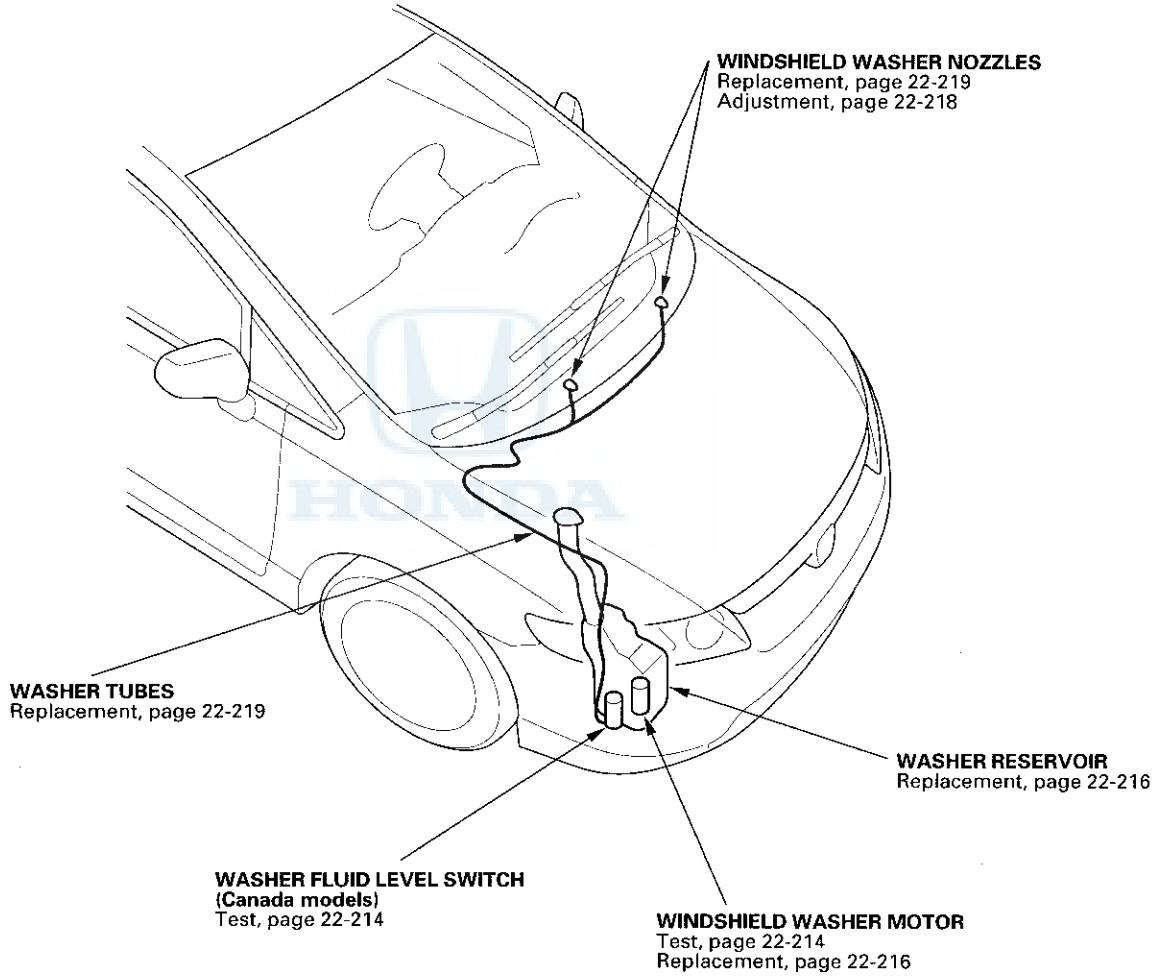

Circuit Diagram

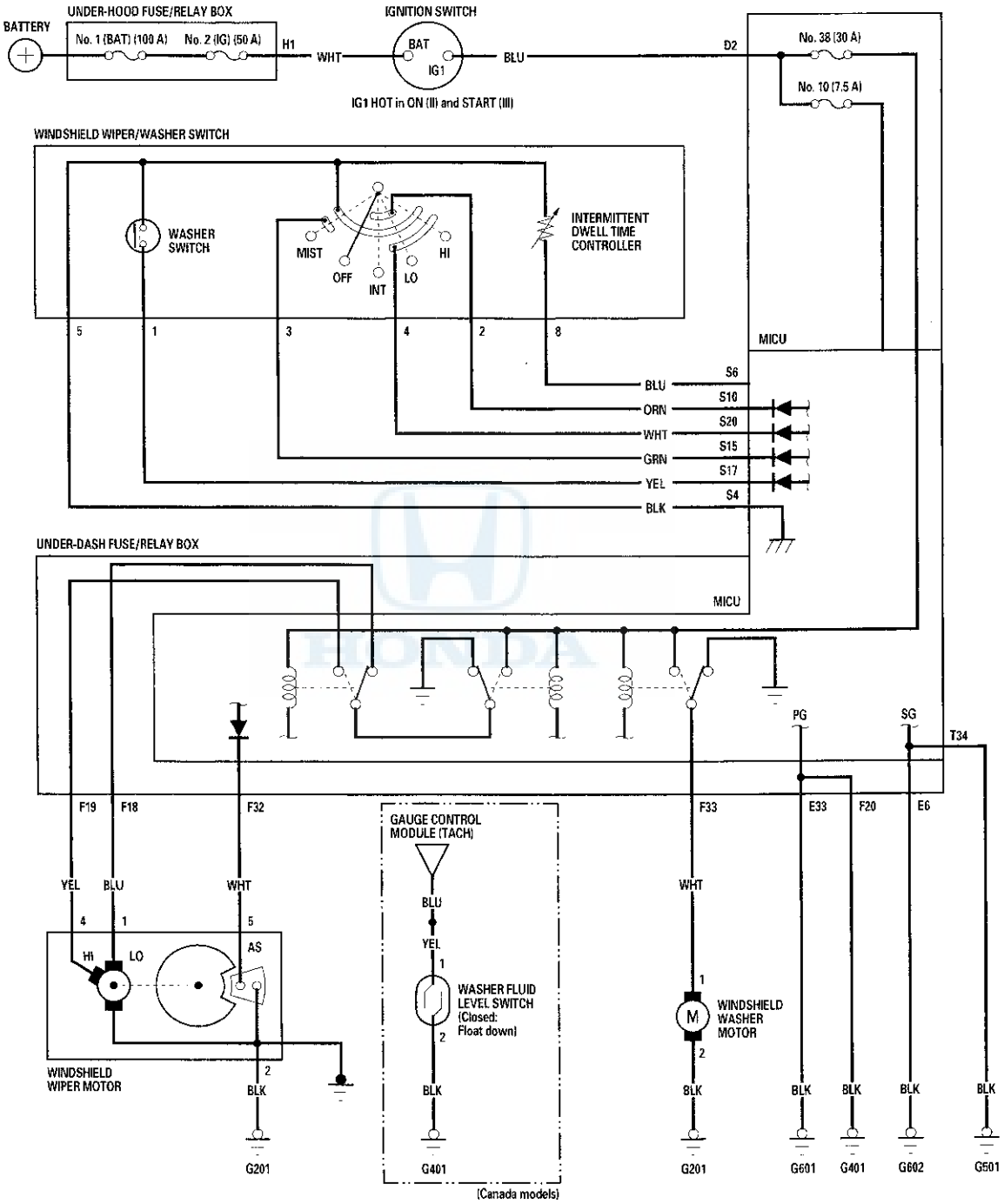

DTC Troubleshooting

DTC B1077: Windshield Wiper (As) Signal Error

NOTE: If you are troubleshooting multiple DTCs, be sure to follow the instructions in B-CAN System Diagnosis Test Mode A (see page 22-89).

1. Clear the DTCs with the HDS.

2. Turn the ignition switch to LOCK (0), and then back to ON (II).

3. Turn the wiper switch to LOW or HIGH for 15 seconds or more, then turn the switch OFF.

   Do the windshield wipers run?

   YES—Go to step 4.

   NO—Go to step 12.

4. Clear the DTCs with the HDS.

   Is DTC B1077 indicated?

   YES—Go to step 5.

   NO—Intermittent failure. The windshield wiper system is OK at the time. Check for loose or poor connections.■

5. Turn the ignition switch to LOCK (0).

6. Do the wiper motor test (see page 22-213).

   Does the wiper motor run normally and does it pulse?

   YES—Go to step 7.

   NO—Replace the windshield wiper motor (see page 22-215), and recheck.■

7. Disconnect the under-dash fuse/relay box connector F (34P) and windshield wiper motor 5P connector.

8. Check for continuity between windshield wiper motor 5P connector terminal No. 5 and under-dash fuse/relay box connector F (34P) terminal No. 32.

UNDER-DASH FUSE/RELAY BOX CONNECTOR F (34P)
Wire side of female terminals

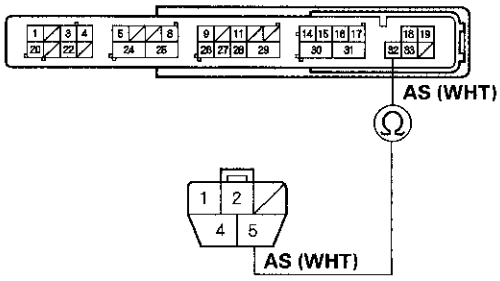

WINDSHIELD WIPER MOTOR 5P CONNECTOR
Wire side of female terminals

   Is there continuity?

   YES—Go to step 9.

   NO—Repair an open in the WHT wire.■

9. Check for continuity between windshield wiper motor 5P connector terminal No. 5 and body ground.

WINDSHIELD WIPER MOTOR 5P CONNECTOR

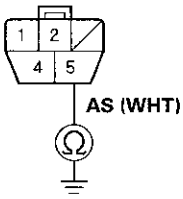

Wire side of female terminals

   Is there continuity?

   YES—Repair open in the WHT wire.■

   NO—Go to step 10.

10. Turn the ignition switch to ON (II).

11. Measure the voltage between windshield wiper motor 5P connector terminal No. 5 and body ground.

WINDSHIELD WIPER MOTOR 5P CONNECTOR

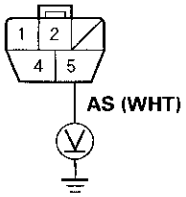

Wire side of female terminals

Is there voltage?

YES—Repair a short to power in the WHT wire. ■

NO—Faulty MICU; replace the under-dash fuse/relay box. ■

12. Turn the ignition switch to LOCK (0).

13. Check the No. 38 (30 A) fuse in the under-dash fuse/relay box.

Is the fuse OK?

YES—Go to step 14.

NO—Replace the fuse and recheck the system. ■

14. Do the wiper motor test (see page 22-213).

Does the windshield wiper motor run normally?

YES—Go to step 15.

NO—Replace the windshield wiper motor (see page 22-215), and recheck. ■

15. Reconnect the windshield wiper motor 5P connector.

16. Measure the voltage between under-dash fuse/relay box connector F (34P) terminals No. 18 (LOW) and No. 19 (HI) and body ground with the wiper switch in the corresponding position.

UNDER-DASH FUSE/RELAY BOX CONNECTOR F (34P)

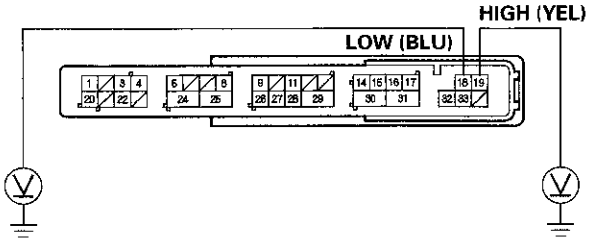

Wire side of female terminals

Is there battery voltage?

YES—Go to step 17.

NO—Faulty MICU; replace the under-dash fuse/relay box (see page 22-60). ■

17. Measure the voltage between windshield wiper motor 5P connector terminal No. 2 and body ground.

WINDSHIELD WIPER MOTOR 5P CONNECTOR

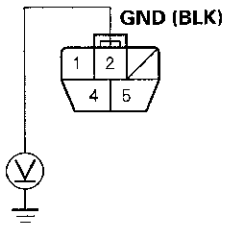

Wire side of female terminals

Is there less than 1 V?

YES—Repair an open in the BLU (LO) or YEL (HI) wire. ■

NO—Repair an open in the BLK wire or poor ground (G201). ■

DTC Troubleshooting (cont'd)

DTC B1281: Windshield Wiper Switch MIST Position Circuit Malfunction

DTC B1282: Windshield Wiper Switch INT Position Circuit Malfunction

DTC B1283: Windshield Wiper Switch LOW Position Circuit Malfunction

DTC B1284: Windshield Wiper Switch HIGH Position Circuit Malfunction

NOTE: If you are troubleshooting multiple DTCs, be sure to follow the instructions in B-CAN System Diagnosis Test Mode A (see page 22-89).

1. Clear the DTCs with the HDS.
2. Turn the ignition switch to LOCK (0) and then back to ON (II).
3. Turn the wiper switch to the MIST, INT, LOW, HIGH, and OFF positions, and wait for 6 seconds or more.
4. Check for DTCs with the HDS.

   Is DTC B1281, B1282, B1283, or B1284 indicated?

   YES—Go to step 5.

   NO—Intermittent failure, the wiper system is OK at this time. Check for loose or poor connections. ■

5. Select WIPERS from the BODY ELECTRICAL menu, and enter DATA LIST.
6. Check each wiper switch position value with the DATA LIST menu.

   When the wiper switch is turned OFF

Data List	Value
Wiper switch (LOW)	OFF
Wiper switch (HIGH)	OFF
Wiper switch (MIST)	OFF
Wiper switch (INT)	OFF

   Are all data list values correct?

   YES—Go to step 7.

   NO—Go to step 10.

7. Turn the ignition switch to LOCK (0).
8. Disconnect under-dash fuse/relay box connector S (20P).
9. Check for continuity between under-dash fuse/relay box connector S (20P) terminals as shown:

From terminal	To terminal
10	6, 15, 20
15	6, 20

   Is there continuity?

   YES—Repair a short between the wires. ■

   NO—Faulty MICU; replace the under-dash fuse/relay box (see page 22-60). ■

10. Turn the ignition switch to LOCK (0).
11. Disconnect the 8P connector from the wiper switch.
12. Turn the ignition switch to ON (II).
13. Check each wiper switch position value with the DATA LIST menu.

   When the wiper switch is turned OFF

Data List	Value
Wiper switch (LOW)	OFF
Wiper switch (HIGH)	OFF
Wiper switch (MIST)	OFF
Wiper switch (INT)	OFF

   Are all data list values correct?

   YES—Replace the wiper/washer switch (see page 22-216). ■

   NO—Go to step 14.

14. Turn the ignition switch to LOCK (0).

15. Disconnect under-dash fuse/relay box connector S (20P).

16. Check for continuity between body ground and under-dash fuse/relay box connector S (20P) terminals No. 10, No. 15, and No. 20 individually.

UNDER-DASH FUSE/RELAY BOX CONNECTOR S (20P)

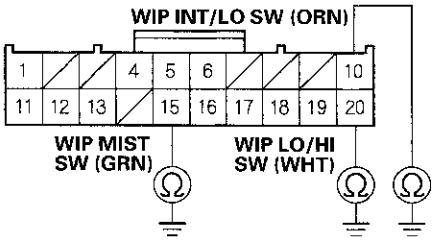

Wire side of female terminals

Is there continuity?

YES—Repair a short to ground in the wire.■

NO—Go to step 17.

17. Check for continuity between under-dash fuse/relay box connector S (20P) terminal No. 4 and terminals No. 10, No. 15, and No. 20 individually.

UNDER-DASH FUSE/RELAY BOX CONNECTOR S (20P)

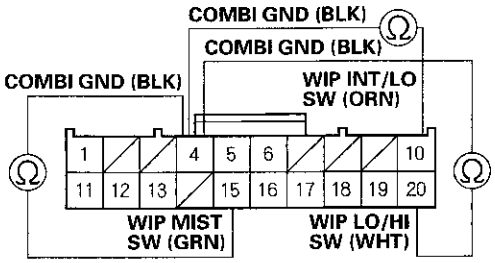

Wire side of female terminals

Is there continuity?

YES—Repair a short between the wires.■

NO—Faulty MICU; replace the under-dash fuse/relay box (see page 22-60).■

MICU Input Test

1. Before testing the wiper/washer system, troubleshoot the system using B-CAN System Diagnosis Test Mode A (see page 22-89), and check the No. 10 (7.5 A) and No. 38 (30 A) fuses in the under-dash fuse/relay box.

2. Disconnect under-dash fuse/relay box connectors E, F, S, and T.

   NOTE: All connector views are shown from wire side of female terminals.

UNDER-DASH FUSE/RELAY BOX CONNECTOR E (42P)

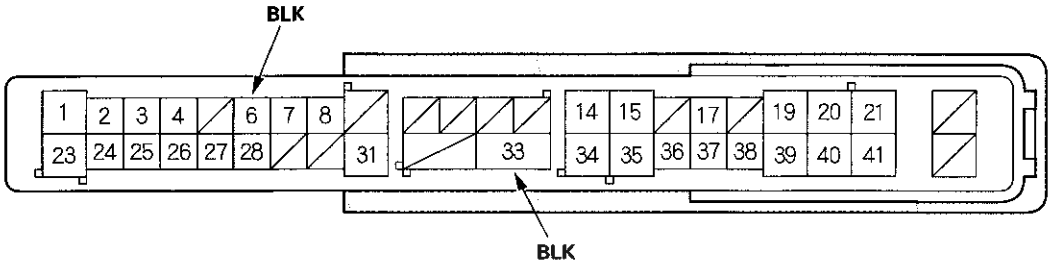

UNDER-DASH FUSE/RELAY BOX CONNECTOR F (34P)

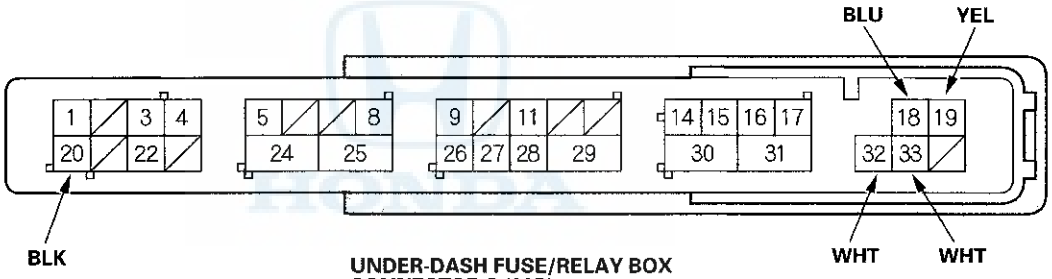

UNDER-DASH FUSE/RELAY BOX CONNECTOR S (20P)

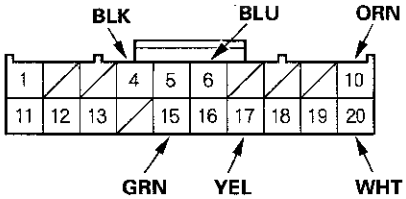

UNDER-DASH FUSE/RELAY BOX CONNECTOR T (34P)

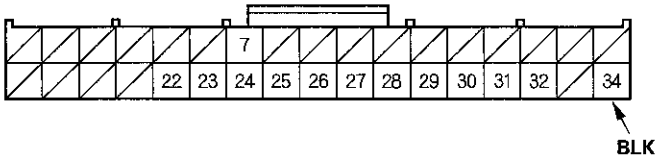

3. Inspect the connector and socket terminals to be sure they are all making good contact.

   - If the terminals are bent, loose or corroded, repair them as necessary and recheck the system.
   - If the terminals look OK, go to step 4.

4. With the connectors still disconnected, do these input tests at the following connectors.

   - If any test indicates a problem, find and correct the cause, then recheck the system.
   - If all the input tests prove OK, go to step 5.

Cavity	Wire	Test condition	Test: Desired result	Possible cause if desired result is not obtained
F18	BLU	Under all conditions	Connect battery power to terminal F18: The wiper motor should run at low speed.	• Poor ground (G201) • Faulty windshield wiper motor • An open in the wire
F19	YEL	Under all conditions	Connect battery power to terminal F19: The wiper motor should run at high speed.	• Poor ground (G201) • Faulty windshield wiper motor • An open in the wire
F32	WHT	Disconnect the windshield wiper motor 5P connector	Check for continuity between terminal F32 and wiper motor 5P connector terminal No. 5: There should be continuity.	An open in the wire
F33	WHT	Under all conditions	Connect battery power to terminal F33: The windshield washer motor should run.	• Poor ground (G201) • Faulty windshield washer motor • An open in the wire
S6	BLU	Windshield wiper/ washer switch (intermittent dwell timer) turned	Measure the resistance between terminals S6 and S4: There resistance should vary from about 0 to 1 kΩ.	• Faulty windshield wiper/ washer switch • An open in the wire • A short to ground in the wire

(cont'd)

MICU Input Test (cont'd)

5. Reconnect the connectors to the under-dash fuse/relay box, and do these input tests at the following connectors.

- If any test indicates a problem, find and correct the cause, then recheck the system.
- If all the input tests prove OK, the MICU must be faulty; replace the under-dash fuse/relay box.

Cavity	Wire	Test condition	Test: Desired result	Possible cause if desired result is not obtained
E6	BLK	Under all conditions	Measure the voltage to ground: There should be less than 0.5 V.	• Poor ground (G602) • An open in the wire
E33	BLK	Under all conditions	Measure the voltage to ground: There should be less than 0.5 V.	• Poor ground (G601) • An open in the wire
F20	BLK	Under all conditions	Measure the voltage to ground: There should be less than 0.5 V.	• Poor ground (G401) • An open in the wire
T34	BLK	Under all conditions	Measure the voltage to ground: There should be less than 0.5 V.	• Poor ground (G501) • An open in the wire
S10 · S4	ORN · BLK	Ignition switch ON (II), windshield wiper/ washer switch (INT) ON	Measure the voltage between terminals S10 and S4, and terminals S20 and S4: There should be less than 1 V.	• Faulty wiper/washer switch • An open in the wire
		Ignition switch ON (II), windshield wiper/ washer switch OFF	Measure the voltage between terminals S10 and S4, and terminals S20 and S4: There should be more than 5 V.	• Faulty windshield wiper/ washer switch • A short to ground in the wire
S15 · S4	GRN · BLK	Ignition switch ON (II), windshield wiper/ washer switch (MIST) ON	Measure the voltage between terminals S15 and S4: There should be less than 1 V.	• Faulty windshield wiper/ washer switch • An open in the wire
		Ignition switch ON (II), windshield wiper/ washer switch (MIST) OFF	Measure the voltage between terminals S15 and S4: There should be more than 5 V.	• Faulty windshield wiper/ washer switch • A short to ground in the wire
S17 · S4	YEL · BLK	Ignition switch ON (II), windshield washer switch ON	Measure the voltage between terminals S17 and S4: There should be less than 1 V.	• Faulty windshield wiper/ washer switch • An open in the wire
		Ignition switch ON (II), windshield washer switch OFF	Measure the voltage between terminals S17 and S4: There should be more than 5 V.	• Faulty windshield wiper/ washer switch • A short to ground in the wire
S20 · S4	WHT · BLK	Ignition switch ON (II), windshield wiper/ washer switch (LOW) ON	Measure the voltage between terminals S20 and S4: There should be less than 1 V.	• Faulty windshield wiper/ washer switch • An open in the wire
		Ignition switch ON (II), windshield wiper/ washer switch OFF	Measure the voltage between terminals S20 and S4: There should be more than 5 V.	• Faulty windshield wiper/ washer switch • A short to ground in the wire
		Ignition switch ON (II), windshield wiper/ washer switch (HIGH) ON	Measure the voltage between terminals S20 and S4: There should be less than 1 V.	• Faulty windshield wiper/ washer switch • An open in the wire
		Ignition switch ON (II), windshield wiper/ washer switch OFF	Measure the voltage between terminals S20 and S4: There should be more than 5 V.	• Faulty windshield wiper/ washer switch • A short to ground in the wire

Wiper/Washer Switch Test

1. Remove the wiper/washer switch (see page 22-216).
2. Disconnect the dashboard wire harness 8P connector (A) from the wiper/washer switch (B).

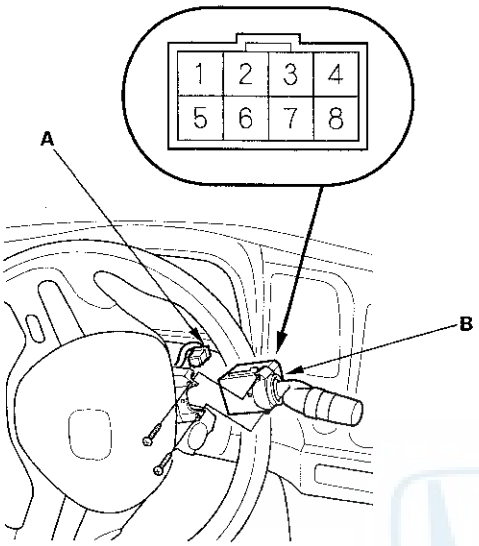

3. Check for continuity between the terminals in each switch position according to the table.

Position \ Terminal	1	2	3	4	5		8
OFF							
INT		○			○		
LO		○		○	○		
HI		○			○		
Mist ON			○		○		
Washer ON	○				○		
Intermittent dwell timer turned					○		○

4. If the continuity is not as specified, replace the switch.

Wiper Motor Test

1. Remove the wiper arms (see page 22-215).

   NOTE: Carefully remove the wiper arms so that they do not touch the hood.

2. Remove the hood seal and cowl cover.
3. Disconnect the 5P connector (A) from the wiper motor (B).

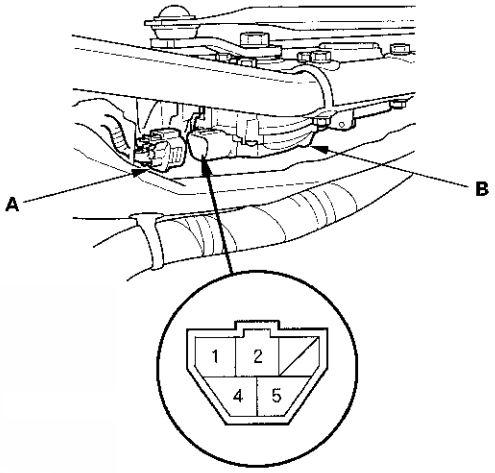

4. Test the motor by connecting battery power and ground according to the table. If the motor does not run or fails to run smoothly, replace the motor.

Position \ Terminal	2	1	4
LOW SPEED	⊖	⊕	
HIGH SPEED	⊖		⊕

5. Connect battery power to terminal No. 1, and body ground to terminal No. 2 of the 5P connector. Then connect an analog voltmeter between terminal No. 1 (+) and terminal No. 5 (−). When the park switch makes contact, the pointer should swing. If not, replace the motor.

Washer Motor Test

1. Remove the right inner fender (see page 20-147).

2. Disconnect the 2P connector (A) from the washer motor (B).

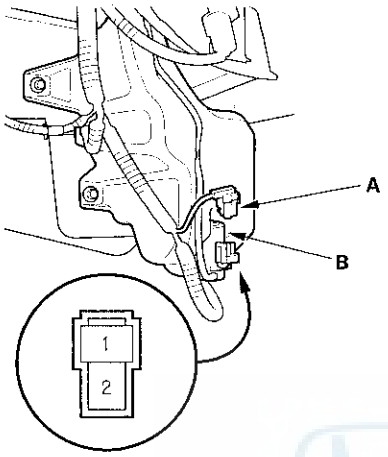

3. Test the motor by connecting battery power to terminal No. 1 and ground terminal No. 2 of the washer motor. The motor should run.

   - If the motor does not run, or fails to run smoothly, replace it.
   - If the motor runs smoothly, but little or no washer fluid is pumped, check for a disconnected or blocked washer hose, or a clogged washer motor outlet.

Washer Fluid Level Switch Test

Canada models

1. Remove the right inner fender (see page 20-147).

2. Disconnect the 2P connector (A) from the washer fluid level switch (B).

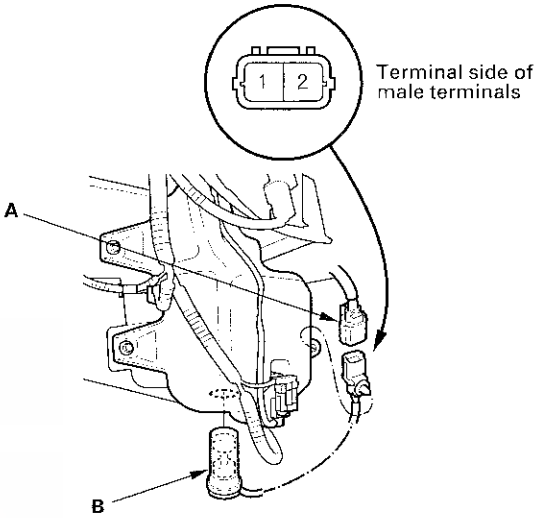

3. Remove the washer fluid level switch from the washer reservoir.

   NOTE: Fluid may flow out of the opening.

4. Check for continuity between terminals No. 1 and No. 2 in each float position.

   - There should be continuity when the float is down.
   - There should be no continuity when the float is up.

5. If the continuity is not as specified, replace the switch.

Wiper Motor Replacement

1. Open the hood. Remove the caps, nuts (A), and the windshield wiper arms (B).

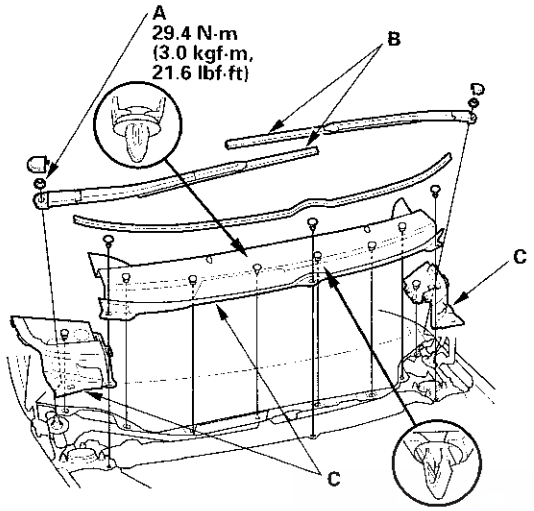

2. Remove the cowl covers (C).

3. Remove the bolts and the under-cowl panel (A).

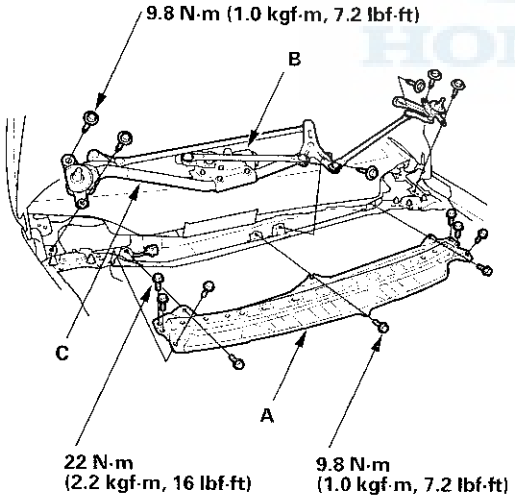

4. Disconnect the 5P connector from the wiper motor (B), then remove the six bolts and wiper linkage assembly (C).

5. Make sure the mark (A) on the link (B) is aligned with the mark (C) on the windshield wiper linkage (D).

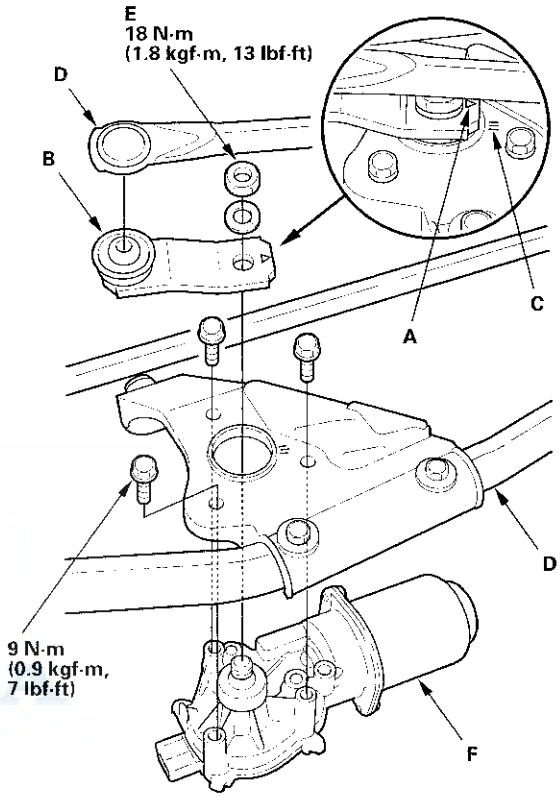

6. Remove the nut (E), and separate the link and windshield wiper linkage.

7. Remove the three bolts, and separate the windshield wiper linkage from the wiper motor (F).

8. Install the wiper motor in the reverse order of removal, and note these items:

   - Align the marks of the link and the linkage to install the linkage with the original adjustment.
   - Apply multipurpose grease to the moving parts.
   - Before installing the wiper arms, turn the wiper switch ON, then OFF to return the wiper shafts to the park position.
   - If necessary, replace any damaged clips.

9. After installation, adjust the wiper arms (see page 22-218).

Wiper/Washer Switch Replacement

1. Remove the dashboard lower cover (see page 20-89).
2. Remove the steering column covers (see page 17-10).
3. Disconnect the dashboard wire harness 8P connector (A) from the wiper/washer switch (B).

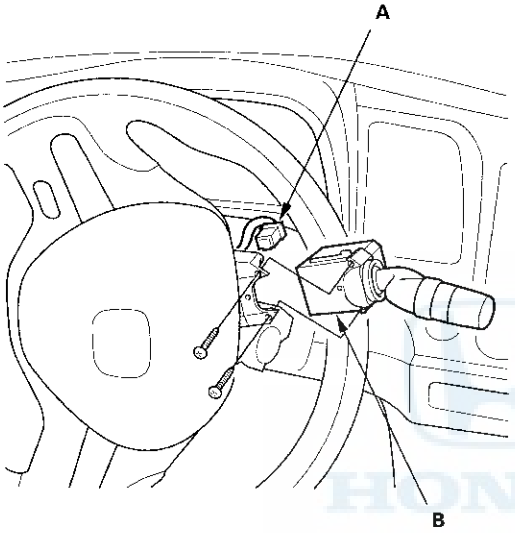

4. Remove the two screws, then slide out the wiper/washer switch.
5. Install the wiper/washer switch in the reverse order of removal.

Washer Reservoir Replacement

1. Remove the right inner fender (see page 20-147).
2. Disconnect the 2P connector(s) (A) from the windshield washer motor (B) and the washer fluid level switch*.
   *: Canada models

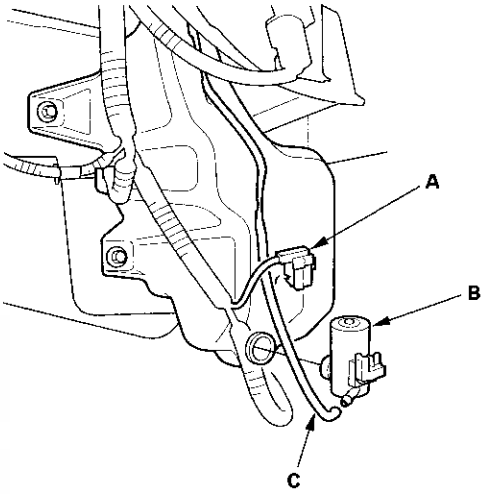

3. Disconnect the windshield washer tube (C) from the washer motor.
4. Remove the bolts (A) and the clip (B), then remove the washer reservoir.

   Washer reservoir capacity:
   2.5 L (2.6 US qt) (USA models)
   4.5 L (4.8 US qt) (Canada models)

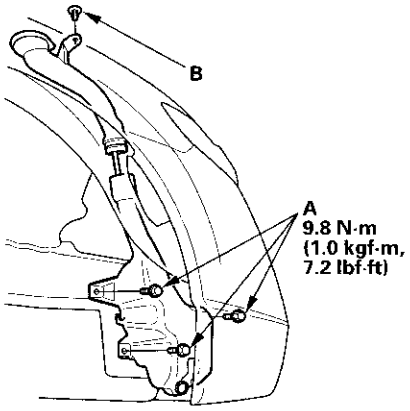

5. Install the washer reservoir in the reverse order of removal.

Wiper Blade Replacement

'06-07 models

1. Lift the wiper arm off the windshield, raising the driver's side first, then the passenger's side.

2. Remove the cover (A), by squeezing the two tabs and pulling it straight out.

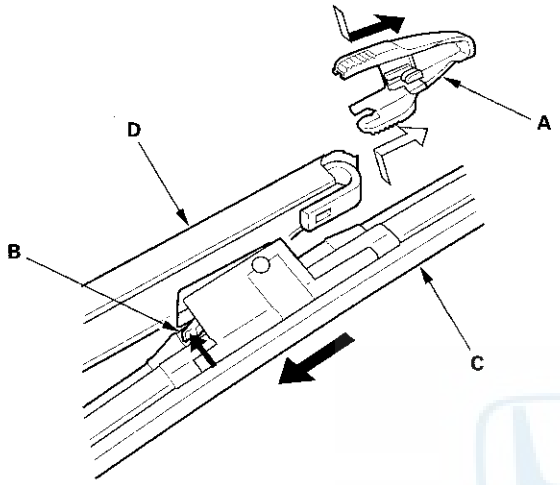

3. Press and hold the tabs (B), and slide the wiper blade (C) toward the tabs until it releases from the wiper arm (D).

4. Find the side of the blade labeled "LOCK" (A), then pull back the end of the blade and slide out the old rubber (B).

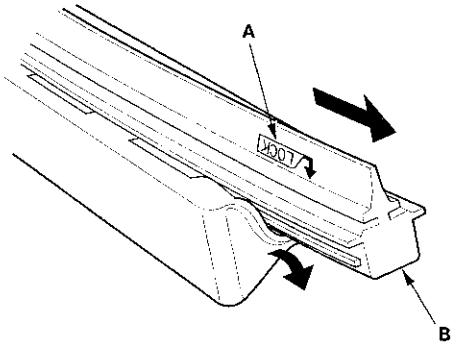

5. Install a new rubber in the reverse order of removal.

6. Install the wiper blade onto the windshield wiper arms in the reverse order of removal.

7. Test by turning on the wipers. If the blades slip, turn off the wipers and seat the attachments more firmly.

'08-09 models

1. Lift the wiper arms off the windshield, raising the driver's side first, then the passenger's side.

2. Pull up and hold the tab (A), and slide the wiper blade (B) toward the tabs until it releases from the wiper arm (C).

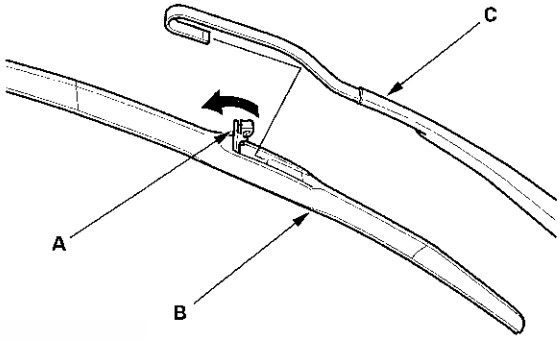

3. Find the blade labeled "SET" (A), then release the blade from it.

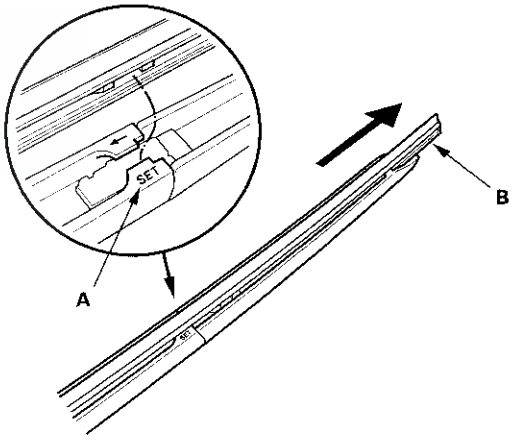

4. Pull back the end of the blade and slide out the old rubber (B).

5. Install a new rubber in the reverse order of removal.

6. Install the wiper blades onto the windshield wiper arms in the reverse order of removal.

7. Test by turning on the wipers. If the blades slip, turn off the wipers and seat the attachments more firmly.

Wiper Arm/Nozzle Adjustment

Wiper arms stop position

1. When the wiper arms stop at the automatic stop position, confirm that they are at the standard position.

   a: Position at about 0.9 in. (23 mm) from the top of cowl cover (A)
   b: Position at about 3.8 in. (96 mm) [4.5 in (114 mm)] from the top of cowl cover (A)
   [ ] : '08-09 models

Washer nozzle position

2. When you turn on the washers, confirm 50 % or more of the washer fluid lands within the spray area. If the spray area is not within the standard positions, adjust the nozzles.

   c: Position at about 7.6 in. (192 mm) from the top of the black ceramic area (B) at the lower windshield
   d: Position at about 7.6 in. (192 mm) from the top of the black ceramic area (B) at the lower windshield
   e: Position at about 9.8 in. (250 mm) from the windshield center line (C)

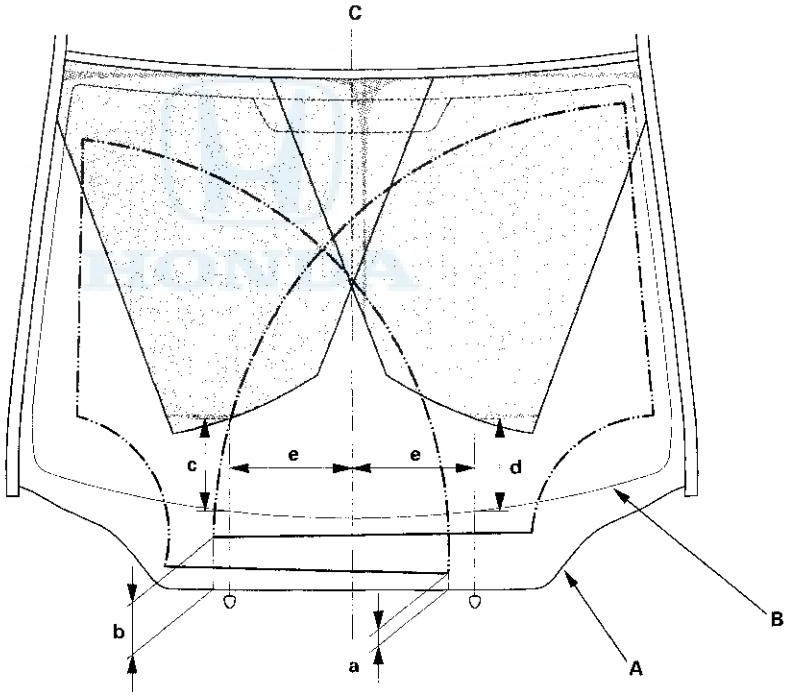

Washer Tube Replacement

1. Remove the right inner fender (see page 20-147).
2. Remove the washer nozzles and clips, then remove the tubes.

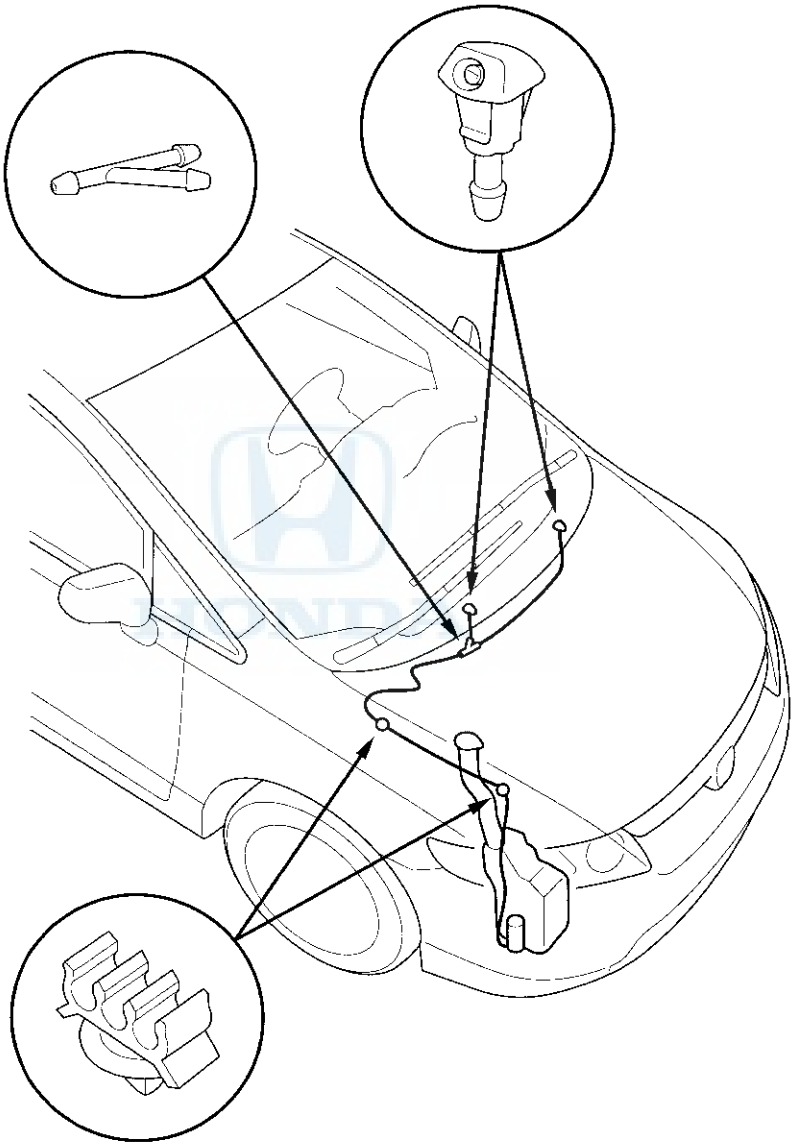

3. Install the parts in the reverse order of removal. Take care not to pinch the washer tube. Check the windshield washer operation.

Component Location Index

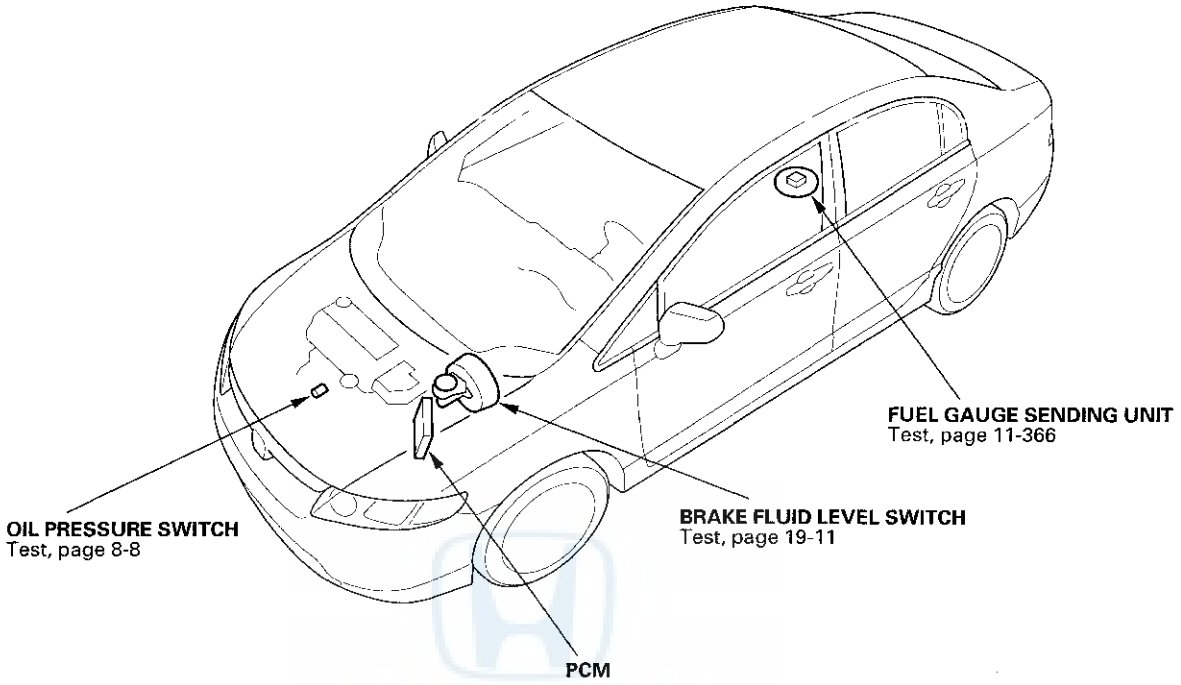

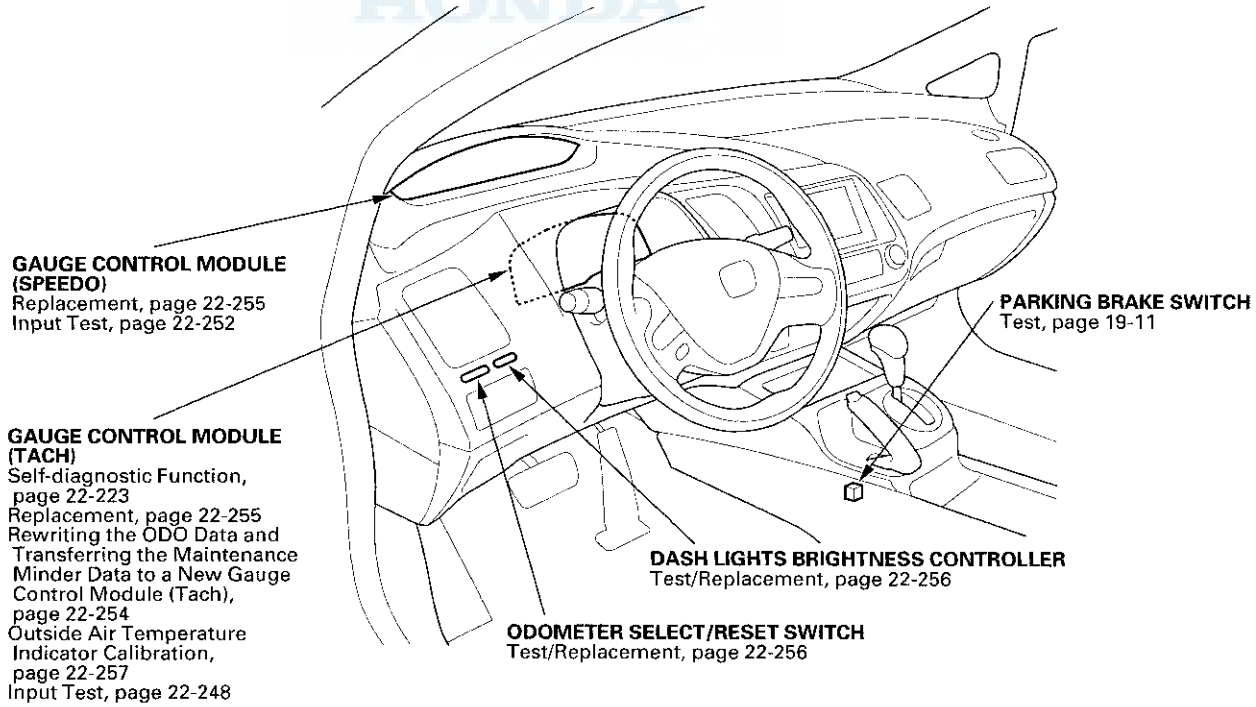

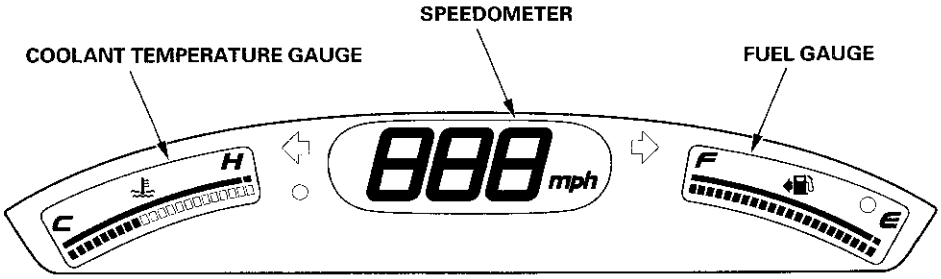
SPEEDOMETER
COOLANT TEMPERATURE GAUGE
FUEL GAUGE
mph
C
H
F
E

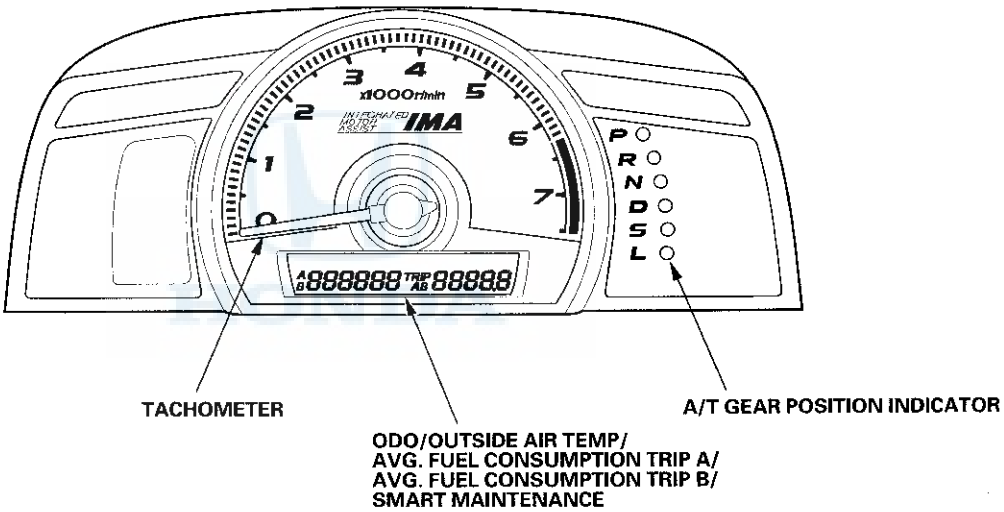
x1000r/min
IMA
P
R
N
D
S
L
TACHOMETER
ODO/OUTSIDE AIR TEMP/
AVG. FUEL CONSUMPTION TRIP A/
AVG. FUEL CONSUMPTION TRIP B/
SMART MAINTENANCE
A/T GEAR POSITION INDICATOR

(cont'd)

Component Location Index (cont'd)

GAUGE CONTROL MODULE (SPEEDO)

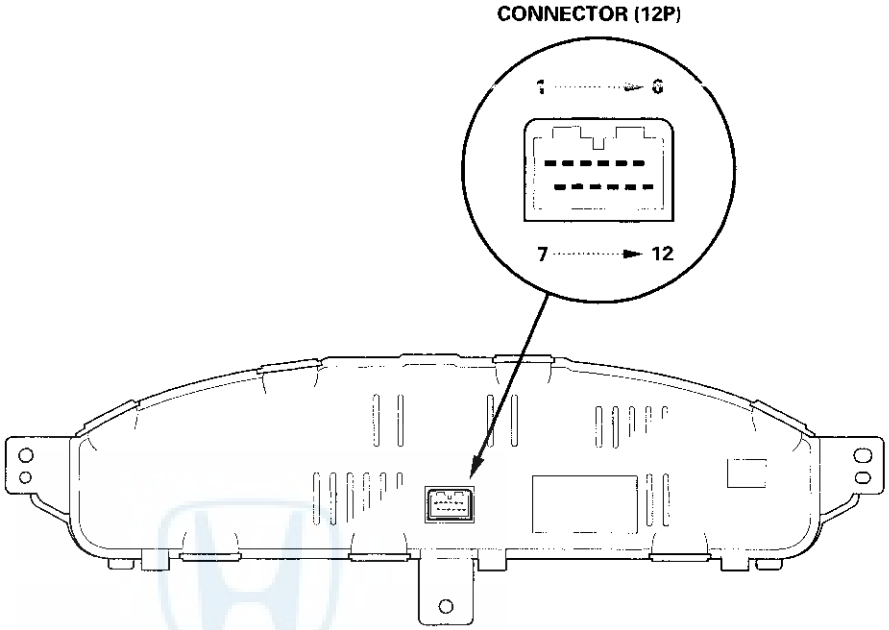

GAUGE CONTROL MODULE (TACH)

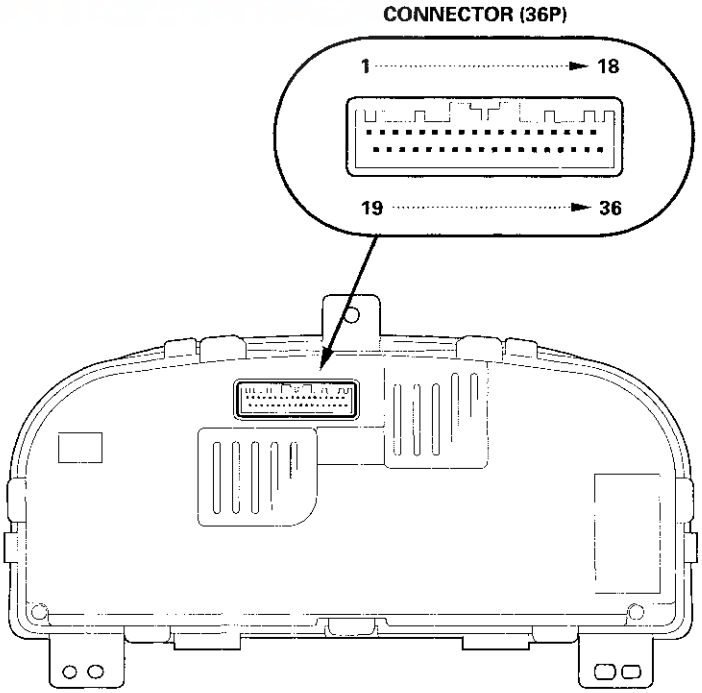

Self-diagnostic Function

Before troubleshooting the gauge system, refer to multiplex integrated control system B-CAN System Diagnosis Test Mode A (see page 22-89).

The gauge control module (TACH) has a self-diagnostic function shown, and also has a customizable reset function.

- The beeper drive circuit check.
- The indicator drive circuit check.
- The switch input test.
- The LCD segments check.
- The gauges drive circuit check (Tachometer, Fuel gauge, Coolant temperature gauge).
- The communication line check (of the body-controller area network (B-CAN) communication line and the fast-controller area network (F-CAN) communication line between the gauges).

NOTE: Indicators are also controlled via the communication line.

Entering the self-diagnostic function (with the HDS)

Using the HDS, select Body Electrical, Gauges, then Function Test and do the self-diagnostic function.

Entering the self-diagnostic function (manual method)

Before doing the self-diagnostic function, check the No. 10 (7.5 A) fuse in the under-dash fuse/relay box and No. 23 (10 A) fuse in the under-hood fuse/relay box.

1. Push and hold the SEL/RESET switch button.
2. Turn the headlights ON.
3. Turn the ignition switch to ON (II).
4. Within 5 sec., turn the headlights OFF, then ON and OFF again.
5. Within 5 sec., release the SEL/RESET switch button, and then push and release the button three times repeatedly.

NOTE:
- While in the self-diagnostic mode, the dash lights brightness controller operates normally.
- While in the self-diagnostic mode, the SEL/RESET switch button is used to start the Beeper Drive Circuit Test and the Gauge Drive Circuit Check.
- If the vehicle speed exceeds 1.2 mph (2 km/h) or the ignition switch is turned to LOCK (0), the self-diagnostic mode ends.

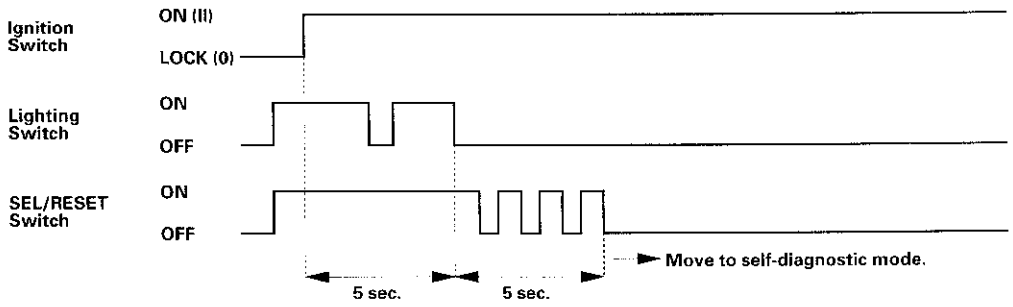

(cont'd)

Self-diagnostic Function (cont'd)

The Indicator Drive Circuit Check

When entering the self-diagnostic mode, the following indicators blink:
A/T gear position indicator, ABS indicator*1, AUTO STOP indicator, brake system indicator, charging system indicator, cruise control indicator, cruise main indicator, door indicator, DRL indicator, EPS indicator, high beam indicator, IMA indicator, immobilizer indicator, lights-on indicator, low fuel indicator, low oil pressure indicator, low tire pressure indicator*3, maintenance minder indicator, malfunction indicator lamp (MIL), seat belt reminder indicators, security indicator, side airbag cutoff indicator, SRS indicator, TPMS indicator*3, trunk indicator, VSA activation indicator*2, VSA indicator*2, and washer fluid level indicator (Canada models).
* 1: Without VSA
* 2: With VSA
* 3: '08-09 models

Switch Input Check

At the initial stage of the self-diagnostic function, the beeper sounds intermittently, the beeper sounds continuously while any of the following switch inputs are switched from OFF to ON:
Cruise control main, dash lights brightness controller volume (+), (−) switch, parking brake switch, SEL/RESET switch, SET, RESUME, CANCEL switches, TEMP-FCD mph-km/h switch, and VSA OFF switch*.
*: With VSA

The Beeper Drive Circuit Check

When entering the self-diagnostic mode, the beeper sounds five times.

The LCD Segment Check

When entering the self-diagnostic mode, all the segments blink five times.

The Gauge Drive Circuit Check

When entering the self-diagnostic mode, the tachometer needle sweeps from the minimum position to maximum position, then returns to the minimum position.

NOTE: After the beeper stops sounding and the gauge needle returns to the minimum position, pushing the SEL/RESET switch starts the Beeper Drive Circuit Check (one beep) and the Gauge Drive Circuit Check again. The check cannot be started again until the gauge needle returns to the minimum position.

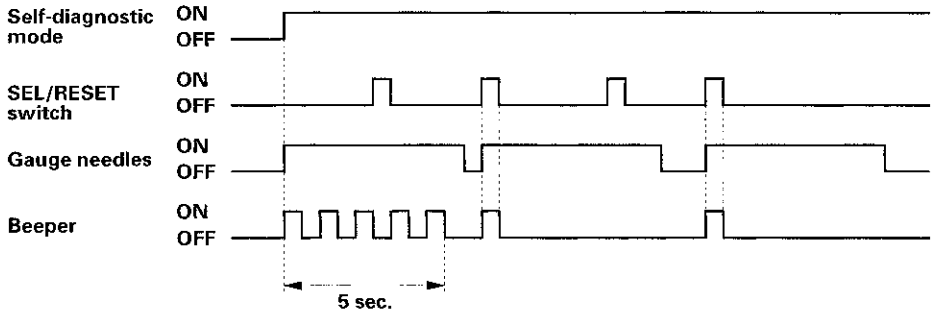

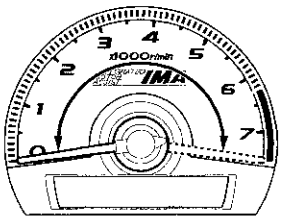

The needle sweeps from the minimum position to the maximum position, then returns to the minimum position.

If the needle fails to sweep, or the beeper does not sound, replace the gauge control module (tach).

The Communication Line Check

While in the self-diagnostic mode, the Communication Line Check starts after the LCD Segments Check.
If all segments come on, the communication lines are OK. If faulty, the word "Error" will be indicated on the odometer display followed by number(s).

- Error 1: F-CAN communication line error
- Error 2: B-CAN communication line error
- Error 3: UART communication line error

Error Code List

Error code	Type of communication line(s) error
Error 1	F-CAN communication
Error 2	B-CAN communication
Error 3	UART communication
Error 12	F-CAN and B-CAN communication
Error 13	F-CAN and UART communication
Error 23	B-CAN and UART communication
Error 123	F-CAN, B-CAN and UART communication

Example Indication

Normal (all segments come on.):

Faulty (Error 1):

Faulty (Error 13):

Faulty (Error 123):

- If the word "Error 1" is indicated, there is a malfunction in the communication line between the gauge control module (tach) and the fast-controller area network (F-CAN). Check for DTCs in the PCM and troubleshoot any DTCs found. If no DTCs are found, go to B-CAN System Diagnosis Test Mode A (see page 22-89).
- If the word "Error 2" is indicated, there is a malfunction in the communication line between the gauge control module (tach) and the body-controller area network (B-CAN). Go to B-CAN System Diagnosis Test Mode A (see page 22-89) (B1155 to B1160).
- If the word "Error 3" is indicated, there is a malfunction in the UART communication line between the gauge control module (tach) and the gauge control module (speedo). Go to the gauge control module (tach) input test (see page 22-248) and check terminal No. 20. If the wire harness is OK, substitute a known-good gauge control module (speedo) and recheck.

If any F-CAN or B-CAN communication line errors are found, go to B-CAN System Diagnosis Test mode A (see page 22-89).

Ending the self-diagnostic function

Turn the ignition switch to LOCK (0).
NOTE: If the vehicle speed exceeds 1.2 mph (2 km/h), the self-diagnostic function ends.

Circuit Diagram - Gauge Control Module (Tach)

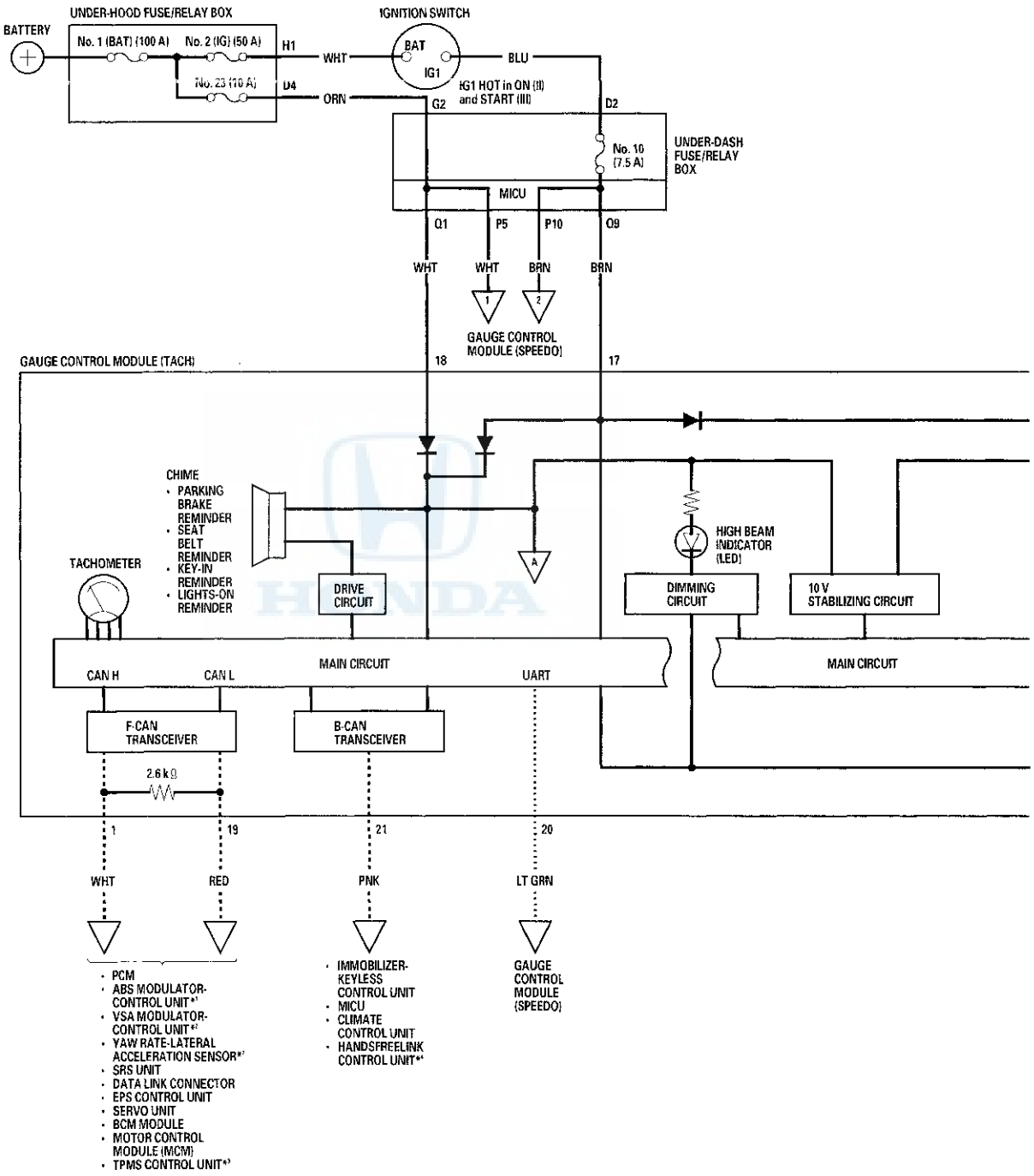

*1: Without VSA
*2: With VSA
*3: '08–09 USA models
*4: '09 model with navigation system
- - - - - - - - - - - : CAN line
. . . . . : Other communication line

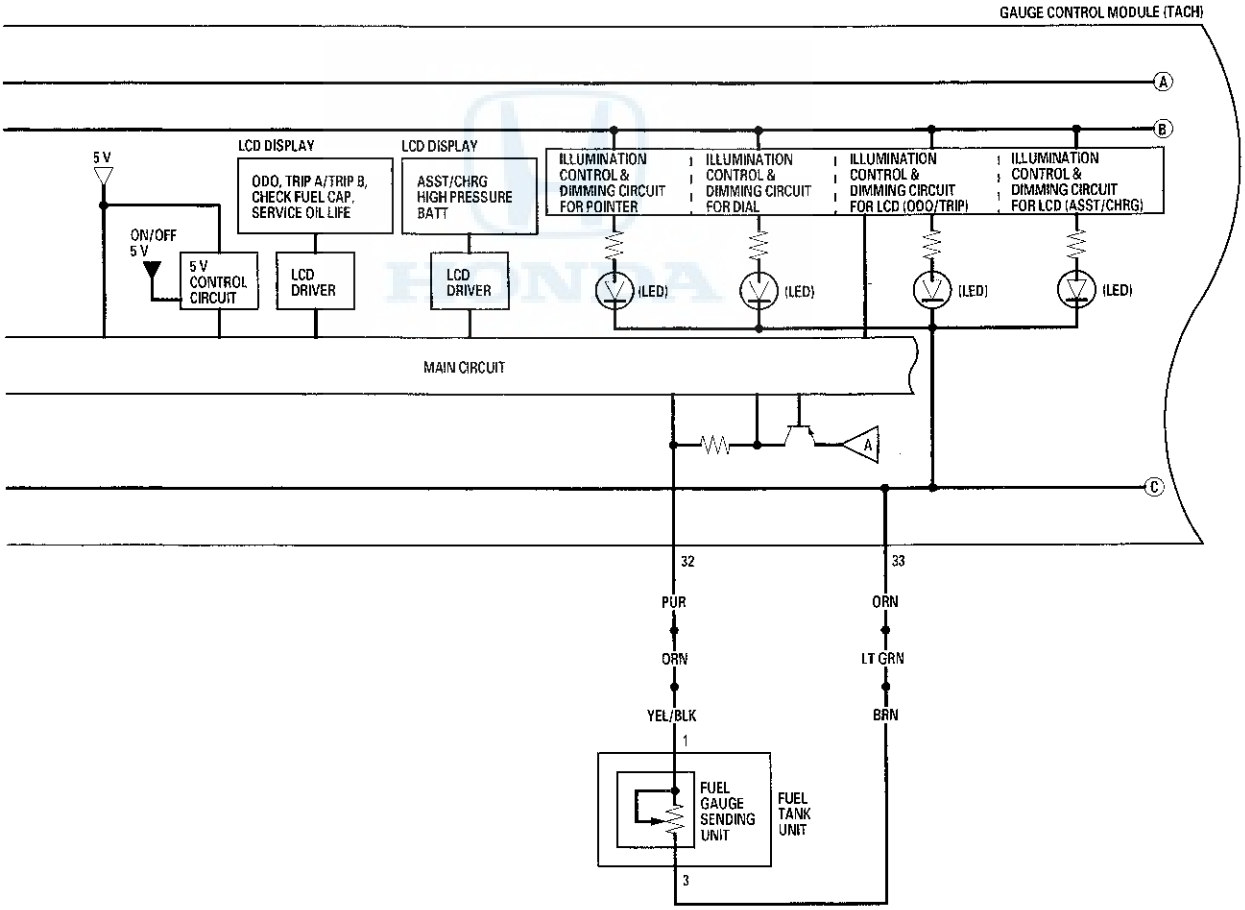

(cont'd)

Circuit Diagram - Gauge Control Module (Tach) (cont'd)

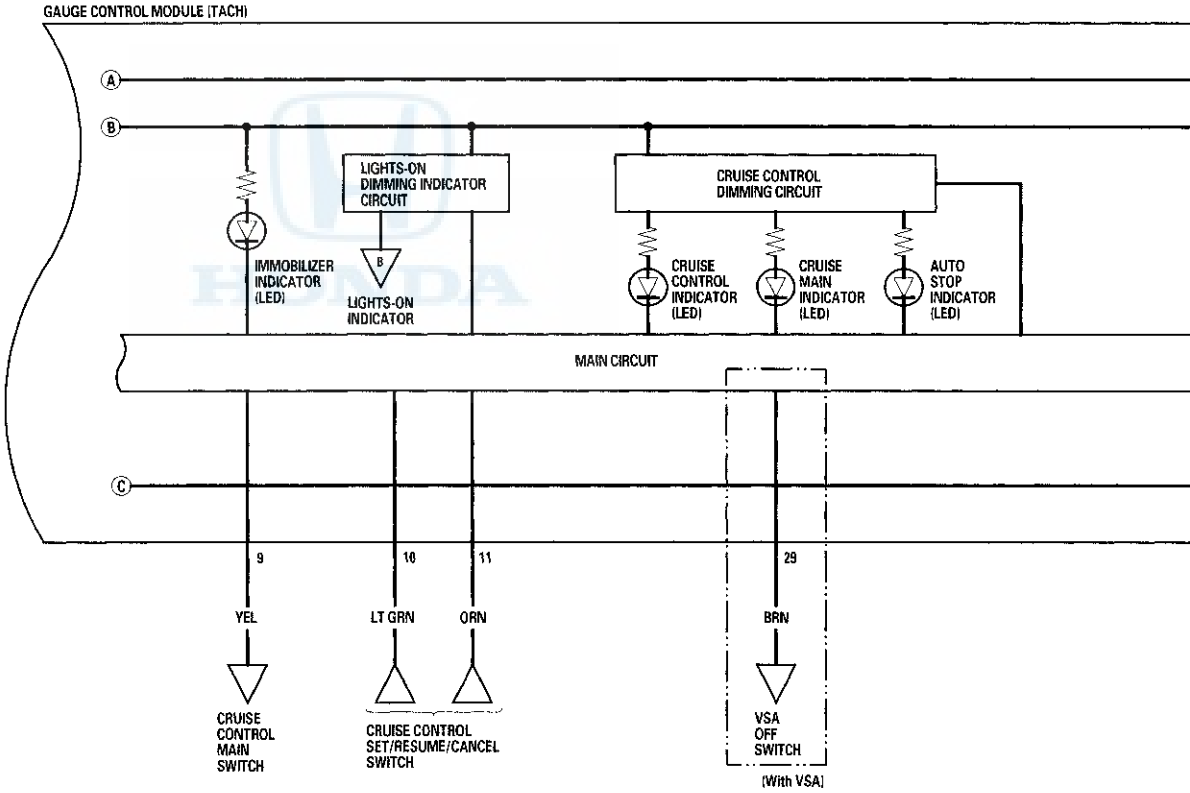

*1: '06 USA CARLINK
*2: With VSA

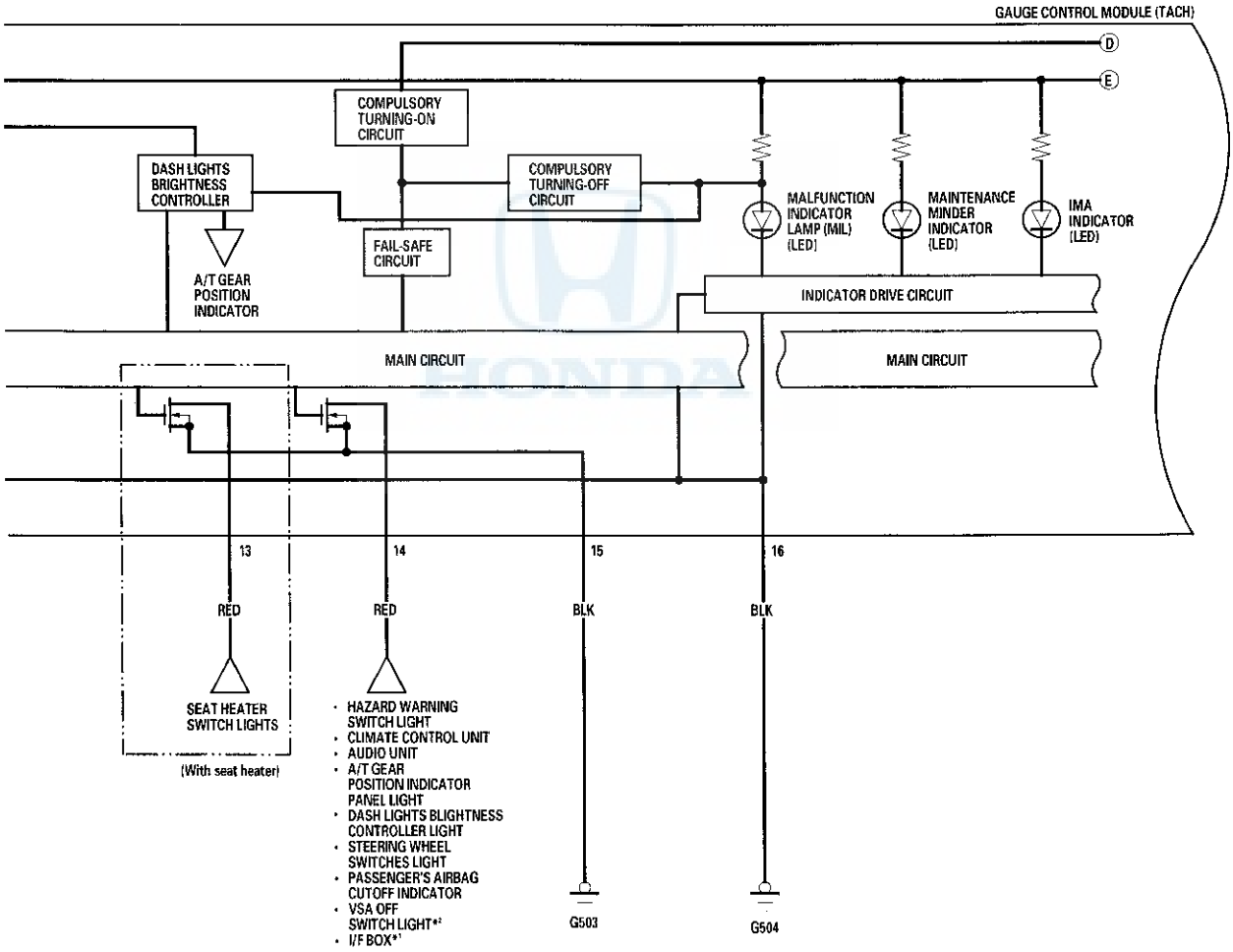

(cont'd)

Circuit Diagram - Gauge Control Module (Tach) (cont'd)

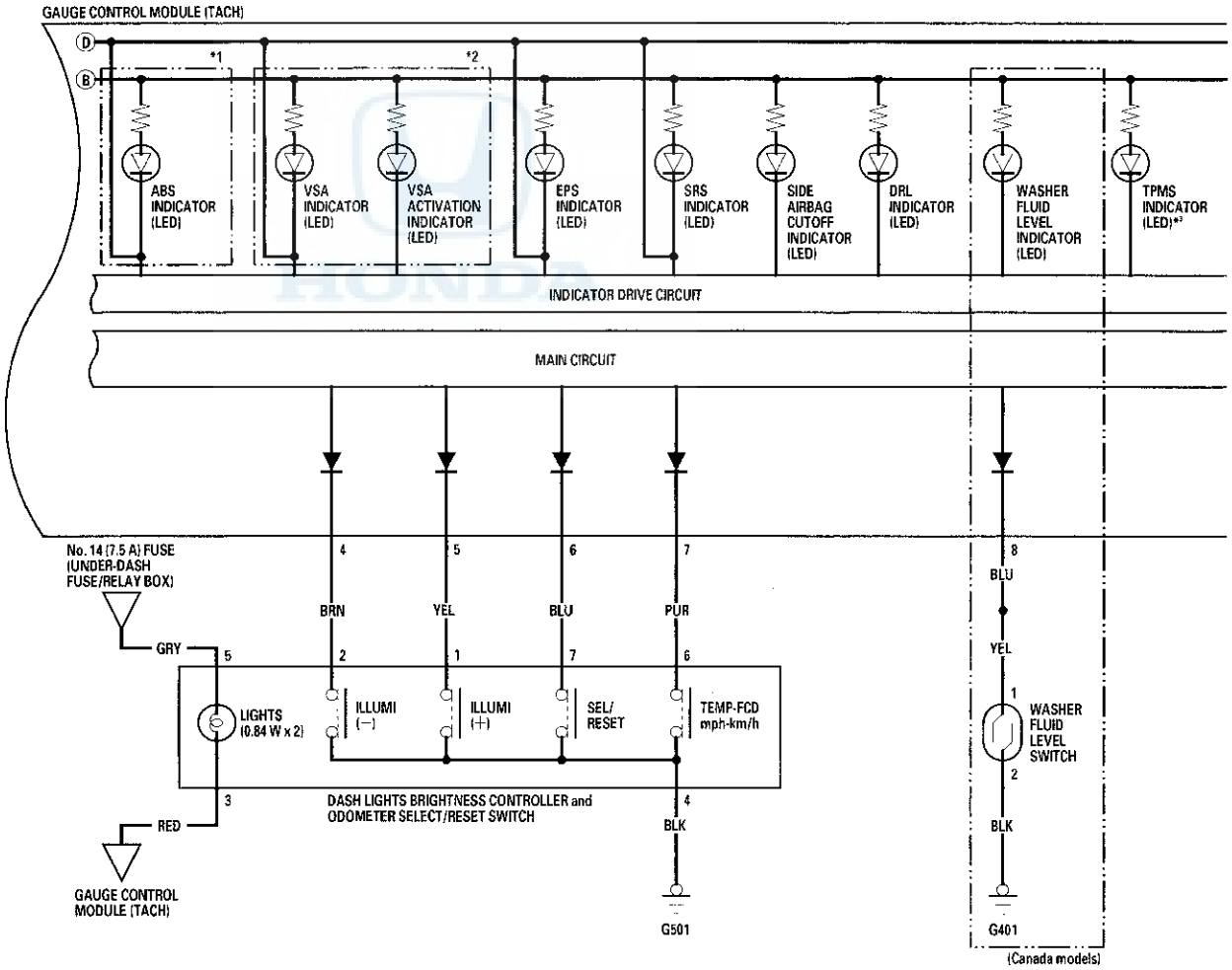

*1: Without VSA
*2: With VSA
*3: '08—09 USA models

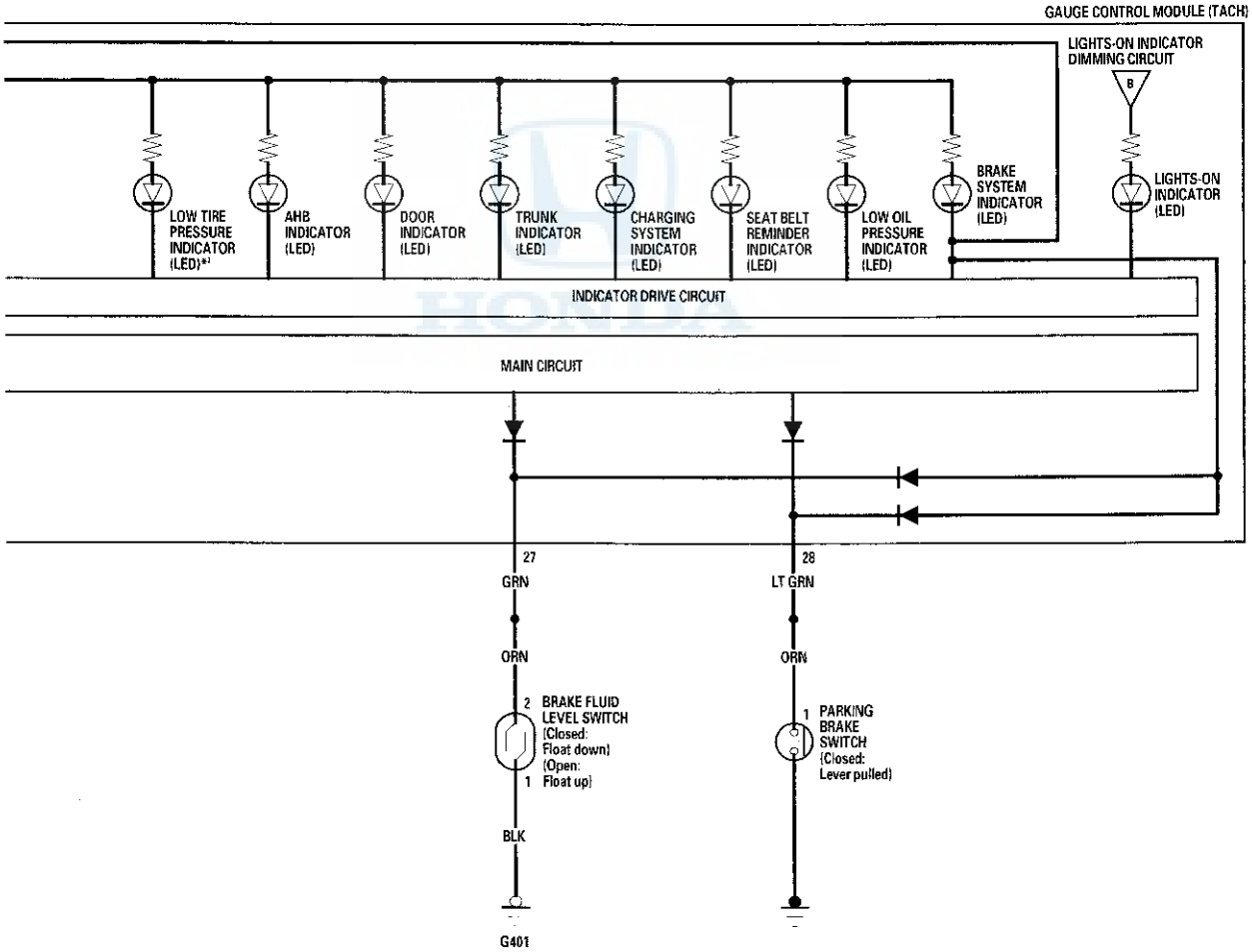

Circuit Diagram - Gauge Control Module (Speedo)

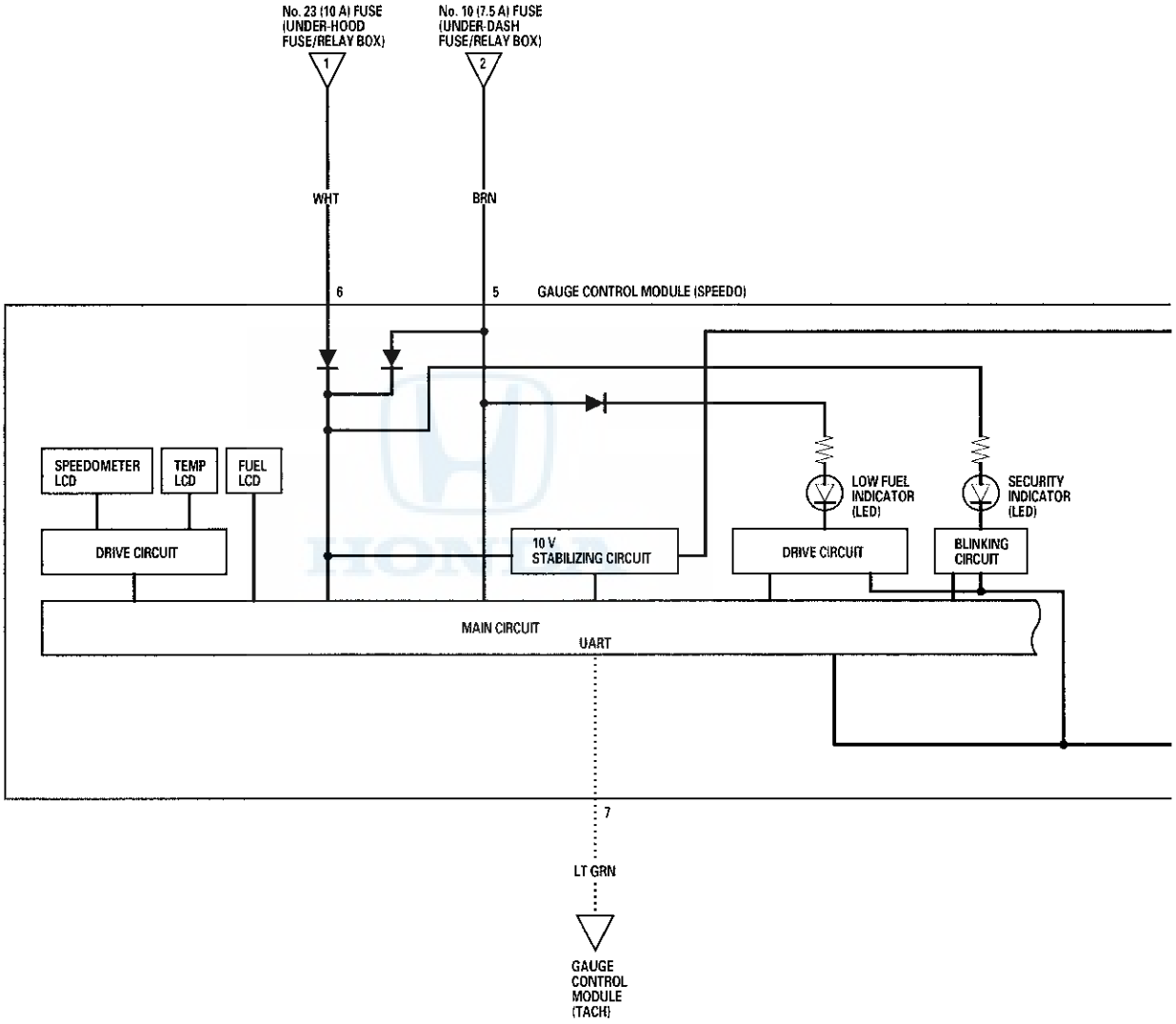

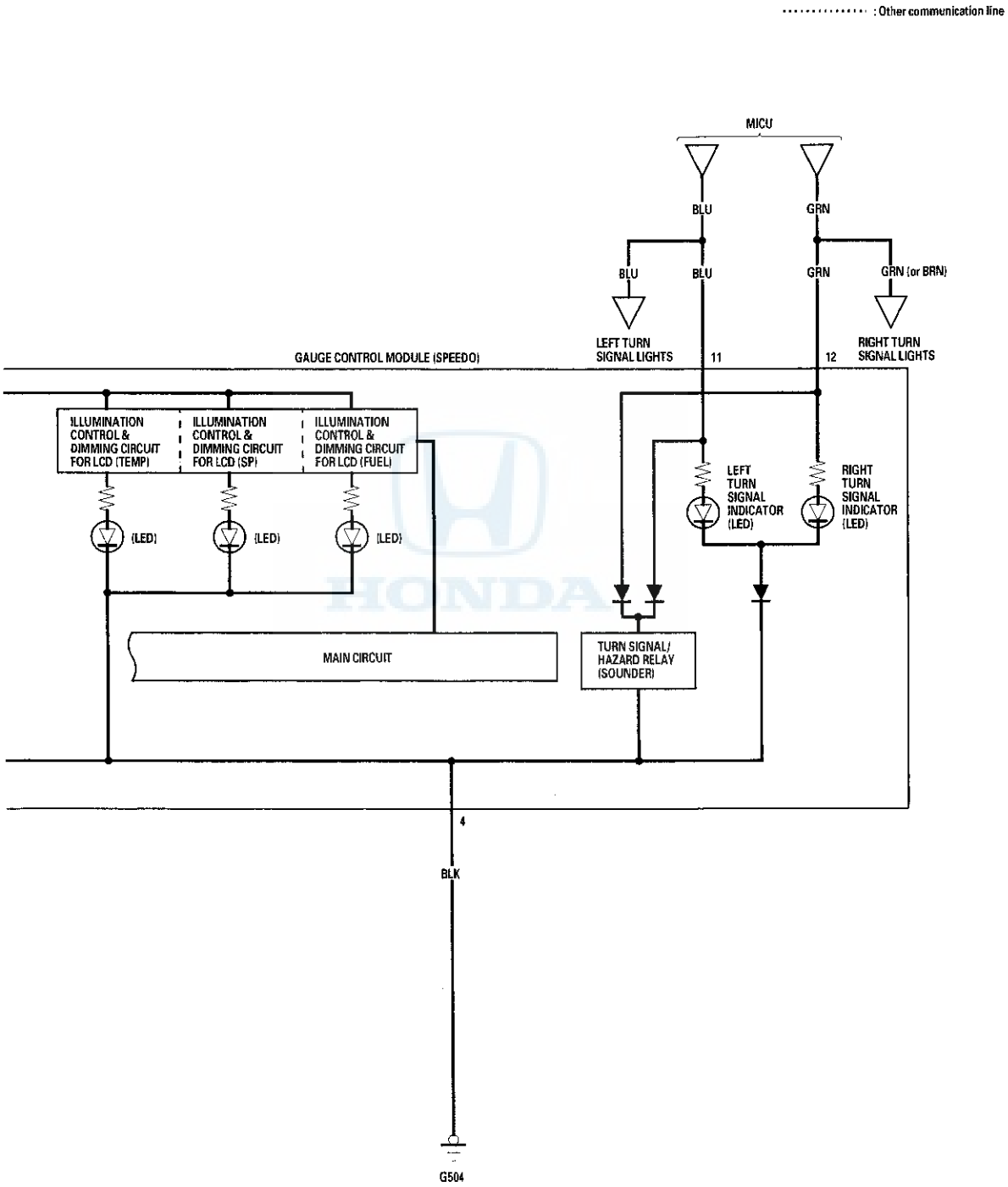
: Other communication line
MICU
BLU
GRN
BLU
BLU
GRN
GRN (or BRN)
LEFT TURN SIGNAL LIGHTS
RIGHT TURN SIGNAL LIGHTS
GAUGE CONTROL MODULE (SPEEDO)
11
12
ILLUMINATION CONTROL & DIMMING CIRCUIT FOR LCD (TEMP)
ILLUMINATION CONTROL & DIMMING CIRCUIT FOR LCD (SP)
ILLUMINATION CONTROL & DIMMING CIRCUIT FOR LCD (FUEL)
(LED)
(LED)
(LED)
LEFT TURN SIGNAL INDICATOR (LED)
RIGHT TURN SIGNAL INDICATOR (LED)
MAIN CIRCUIT
TURN SIGNAL/ HAZARD RELAY (SOUNDER)
4
BLK
G504

Circuit Diagram - Dash Lights Brightness Controller

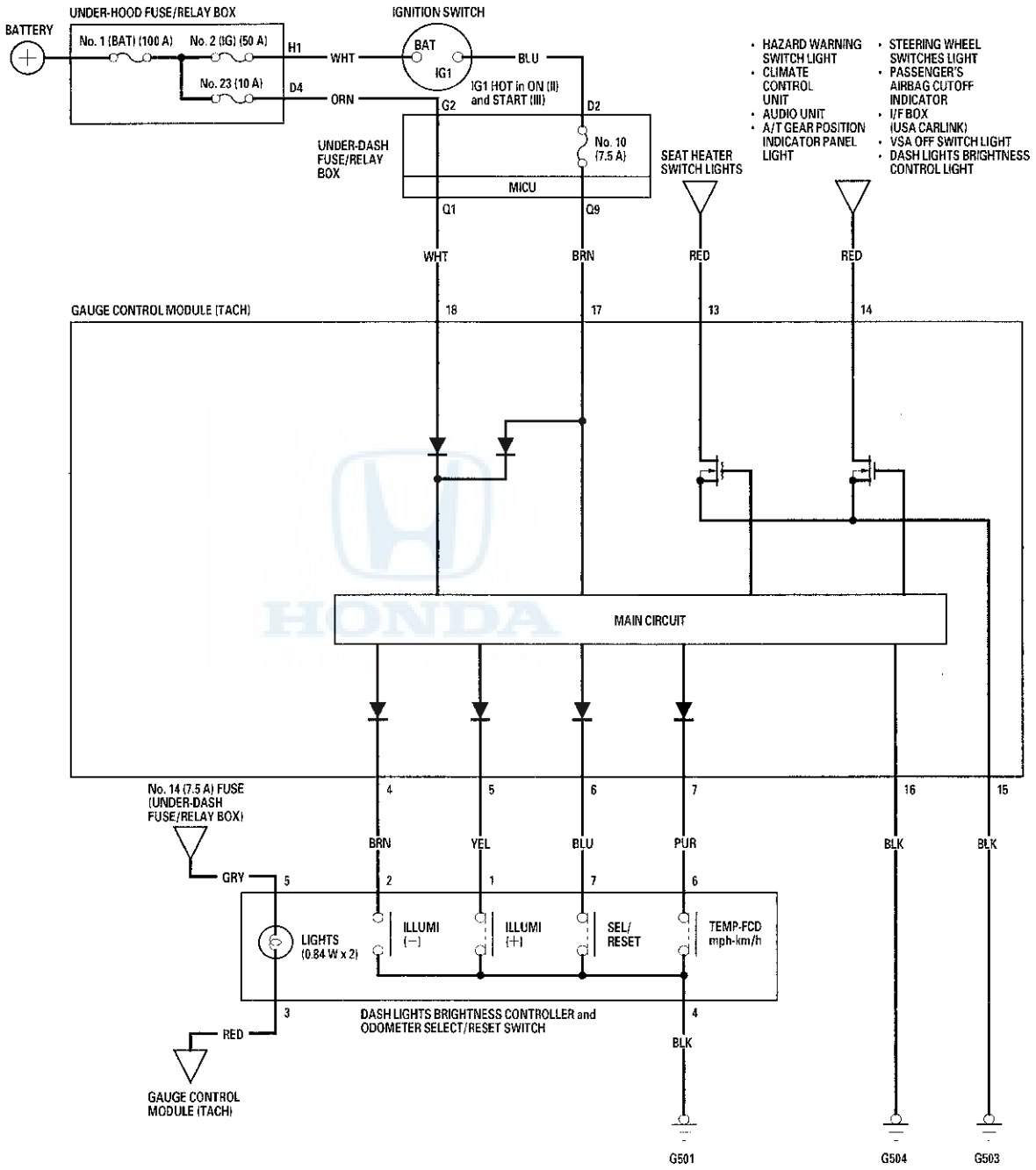

DTC Troubleshooting

DTC B1152: Gauge Control Module Internal (EEPROM) Error

NOTE: If you are troubleshooting multiple DTCs, be sure to follow the instructions in B-CAN System Diagnosis Test Mode A (see page 22-89).

1. Clear the DTCs with the HDS.
2. Turn the ignition switch to LOCK (0), and then back to ON (II).
3. Wait for at least 6 seconds.
4. Check for DTCs with the HDS.

   Is DTC B1152 indicated?

   YES—Replace the gauge control module (tach) (see page 22-255). ■

   NO—Intermittent failure, the system is OK at this time. Check for loose or poor connections. If the connections are good, check the battery condition (see page 22-61), and the charging system. ■

DTC B1155: Gauge Control Module Lost Communication with the MICU (Headlight Switch Message)

DTC B1156: Gauge Control Module Lost Communication with the MICU (Wiper Switch Message)

DTC B1159: Gauge Control Module Lost Communication with the MICU (DOORSW Message)

DTC B1188: Gauge Control Module Lost Communication with the MICU (RM Message)

NOTE: If you are troubleshooting multiple DTCs, be sure to follow the instructions in B-CAN System Diagnosis Test Mode A (see page 22-89).

1. Clear the DTCs with the HDS.
2. Turn the ignition switch to LOCK (0), and then back to ON (II).
3. Check for DTCs with the HDS.

   Are DTCs B1155, B1156, B1157, B1159, B1160, and/or B1188 indicated?

   YES—Go to step **4**.

   NO—Intermittent failure. The gauge control module is OK at this time. Check for loose or poor connections. If the connections are good, check the battery condition (see page 22-61), and the charging system. ■

4. Check for DTCs with the HDS.

   Are DTCs B1155, B1156, B1157, B1159, B1160, and B1188 indicated at the same time?

   YES—Faulty MICU; replace the under-dash fuse/relay box (see page 22-60). ■

   NO—Replace the gauge control module (tach) (see page 22-255). ■

DTC Troubleshooting (cont'd)

DTC B1157: Gauge Control Module Lost Communication with the MICU (MICU Message)

NOTE: If you are troubleshooting multiple DTCs, be sure to follow the instructions in B-CAN System Diagnosis Test Mode A (see page 22-89).

1. Clear the DTCs with the HDS.
2. Turn the ignition switch to LOCK (0), and then back to ON (II).
3. Check for DTCs with the HDS.

   Is DTC B1157 indicated?

   YES—Go to step 4.

   NO—Intermittent failure. The gauge control module is OK at this time. Check for loose or poor connections. If the connections are good, check the battery condition (see page 22-61), and the charging system. ■

4. Check for DTCs with the HDS.

   Are DTCs B1157 and B1605 indicated at the same time?

   YES—Faulty MICU; replace the under-dash fuse/relay box (see page 22-60). ■

   NO—Replace the gauge control module (tach) (see page 22-255). ■

DTC B1160: Gauge Control Module Lost Communication with the MICU (DRLOCKSW Message)

NOTE: If you are troubleshooting multiple DTCs, be sure to follow the instructions in B-CAN System Diagnosis Test Mode A (see page 22-89).

1. Clear the DTCs with the HDS.
2. Turn the ignition switch to LOCK (0), and then back to ON (II).
3. Check for DTCs with the HDS.

   Is DTC B1160 indicated?

   YES—Go to step 4.

   NO—Intermittent failure. The gauge control module is OK at this time. Check for loose or poor connections. If the connections are good, check the battery condition (see page 22-61), and the charging system. ■

4. Check for DTCs with the HDS.

   Are DTCs B1160 and B1905 indicated at the same time?

   YES—Faulty MICU; replace the under-dash fuse/relay box (see page 22-60). ■

   NO—Replace the gauge control module (tach) (see page 22-255). ■

DTC B1168: Gauge Control Module Lost Communication with the PCM (ENG Message)

DTC B1169: Gauge Control Module Lost Communication with the PCM (A/T Messages)

NOTE: If you are troubleshooting multiple DTCs, be sure to follow the instructions in B-CAN System Diagnosis Test Mode A (see page 22-89).

1. Clear the DTCs with the HDS.
2. Turn the ignition switch to LOCK (0), and then back to ON (II).
3. Wait for at least 6 seconds.
4. Check for DTCs with the HDS.

   Is DTC B1168 or B1169 indicated?

   YES—Go to step 5.

   NO—Intermittent failure, the system is OK at this time. Check for loose or poor connections. ■

5. Check for Fuel and Emission system DTCs with the HDS (see page 11-3).

   Is any DTCs indicated?

   YES—Go to the indicated DTCs, then recheck.

   NO—Go to step 6.

6. Turn the ignition switch to LOCK (0).
7. Disconnect the gauge control module (tach) 36P connector.
8. Jump the SCS line with the HDS (see page 11-3).
9. Disconnect PCM connector A (44P).
10. Connect the gauge control module (tach) 36P connector terminals No. 1 and No. 19 and body ground with jumper wires.

GAUGE CONTROL MODULE (TACH) 36P CONNECTOR

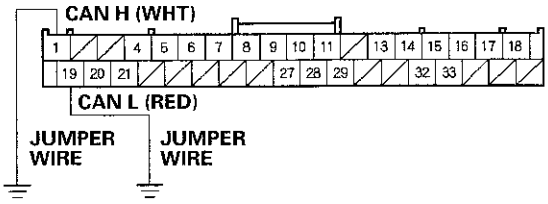

Wire side of female terminals

11. Check for continuity between PCM connector A (44P) terminals No. 36 and No. 37 and body ground individually.

PCM CONNECTOR A (44P)

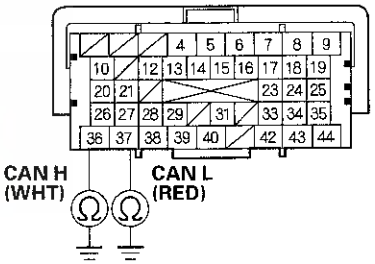

Terminal side of female terminals

Is there continuity?

YES—Update the PCM if it does not have the latest software (see page 11-236), or substitute a known-good PCM (see page 11-7), and recheck. If the indication goes away, replace the original PCM (see page 11-238). If the DTC is still present, replace the gauge control module (tach) (see page 22-255). ■

NO—Repair open in the wire. ■

DTC Troubleshooting (cont'd)

DTC B1170: Gauge Control Module Lost Communication with the VSA Modulator-Control Unit (VSA message)

NOTE:
- If you are troubleshooting multiple DTCs, be sure to follow the instructions in B-CAN System Diagnosis Test Mode A (see page 22-89).
- If the HDS does not communicate with the VSA modulator-control unit, the VSA indicator stay on, and no VSA DTCs are stored, go to symptom troubleshooting for ABS indicator, brake system indicator, and VSA indicator do not go off, and no DTCs are stored (see page 19-230).

1. Clear the DTCs with the HDS.

2. Turn the ignition switch to LOCK (0), and then back to ON (II).

3. Wait for at least 6 seconds.

4. Check for DTCs with the HDS.

   Is DTC B1170 indicated?

   YES—Go to step 5.

   NO—Intermittent failure, the system is OK at this time. Check for loose or poor connections between the gauge control module (tach) and the VSA modulator-control unit. ■

5. Check for VSA system DTCs with the HDS.

   Is any DTCs indicated?

   YES—Go to the indicated DTCs, then recheck.

   NO—Go to step 6.

6. Turn the ignition switch to LOCK (0).

7. Disconnect the gauge control module (tach) 36P connector.

8. Disconnect the VSA modulator-control unit 37P connector.

9. Connect the gauge control module (tach) 36P connector terminals No. 1 and No. 19 and body ground with jumper wires.

GAUGE CONTROL MODULE (TACH) 36P CONNECTOR

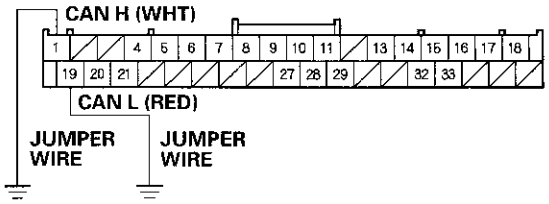

Wire side of female terminals

10. Check for continuity between the VSA modulator-control unit 37P connector terminals No. 1 and No. 15 and body ground individually.

VSA MODULATOR-CONTROL UNIT 37P CONNECTOR

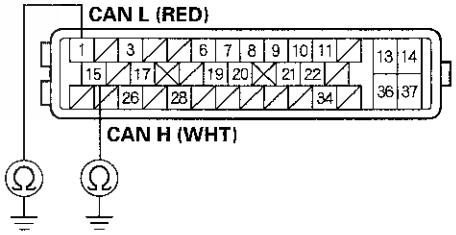

Wire side of female terminals

Is there continuity?

YES—Substitute a known-good VSA modulator-control unit, and recheck. If the indication goes away, replace the original VSA modulator-control unit (see page 19-236). If the DTC is still present, replace the gauge control module (see page 22-255). ■

NO—Repair open in the wire. ■

DTC B1173: Gauge Control Module Lost Communication with the TPMS Control Unit (TPMS message) ('08-09 USA models)

NOTE: If you are troubleshooting multiple DTCs, be sure to follow the instructions in B-CAN System Diagnosis Test Mode A (see page 22-89).

1. Clear the DTCs with the HDS.
2. Turn the ignition switch to LOCK (0), and then back to ON (II).
3. Wait for at least 6 seconds.
4. Check for DTCs with the HDS.

   Is DTC B1173 indicated?

   YES—Go to step 5.

   NO—Intermittent failure, the system is OK at this time. Check for loose or poor connections.■

5. Check for TPMS DTCs with the HDS.

   Are any DTCs indicated?

   YES—Go to the indicated DTCs, then recheck.

   NO—Go to step 6.

6. Turn the ignition switch to LOCK (0).
7. Disconnect the gauge control module (tach) 36P connector.
8. Disconnect the TPMS control unit 20P connector.
9. Check for continuity between the gauge control module (tach) 36P connector terminals No. 1 and No. 19 and the TPMS control unit 20P connector terminals No. 2 and No. 11 respectively.

GAUGE CONTROL MODULE (TACH) 36P CONNECTOR
Wire side of female terminals

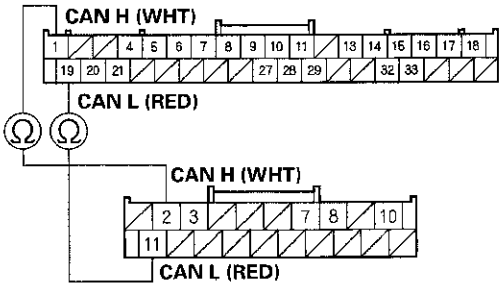

TPMS CONTROL UNIT 20P CONNECTOR
Wire side of female terminals

Is there continuity?

YES—Substitute a known-good TPMS control unit, and recheck. If the indication goes away, replace the original TPMS control unit (see page 18-79). If the DTC is still present, replace the gauge control module (tach) (see page 22-255).■

NO—Repair open in the wire.■

DTC Troubleshooting (cont'd)

DTC B1175: Fuel Level Sensor (Fuel Gauge Sending Unit) Circuit Open

NOTE: If you are troubleshooting multiple DTCs, be sure to follow the instructions in B-CAN System Diagnosis Test Mode A (see page 22-89).

1. Clear the DTCs with the HDS.
2. Turn the ignition switch to LOCK (0), and then back to ON (II).
3. Wait for at least 30 seconds.
4. Check for DTCs with the HDS.

   Is DTC B1175 indicated?

   YES—Go to step 5.

   NO—Intermittent failure, the fuel level sensor circuit is OK at this time. Check for loose or poor connections. ■

5. Turn the ignition switch to LOCK (0).
6. Disconnect the fuel tank unit 5P connector and the gauge control module (tach) 36P connector.
7. Connect fuel tank unit 4P connector terminals No. 1 and No. 3 to body ground with jumper wires.

FUEL TANK UNIT 4P CONNECTOR

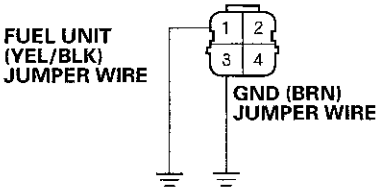

Wire side of female terminals

8. Check for continuity between gauge control module (tach) 36P connector terminals No. 32 and No. 33 and body ground individually.

GAUGE CONTROL MODULE (TACH) 36P CONNECTOR

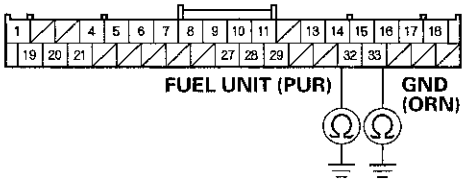

Wire side of female terminals

Is there continuity?

YES—Go to step 9.

NO—Repair open in the wire between the gauge control module (tach) and the fuel tank unit. ■

9. Do the fuel gauge sending unit test (see page 11-366).

   Is the fuel gauge sending unit OK?

   YES—Replace the gauge control module (tach) (see page 22-255). ■

   NO—Replace the fuel tank unit (see page 11-361). ■

DTC B1176: Fuel Level Sensor (Fuel Gauge Sending Unit) Circuit Short

NOTE: If you are troubleshooting multiple DTCs, be sure to follow the instructions in B-CAN System Diagnosis Test Mode A (see page 22-89).

1. Clear the DTCs with the HDS.
2. Turn the ignition switch to LOCK (0), and then back to ON (II).
3. Wait for at least 30 seconds.
4. Check for DTCs with the HDS.

   Is DTC B1176 indicated?

   YES—Go to step 5.

   NO—Intermittent failure, the fuel level sensor circuit is OK at this time. Check for loose or poor connections.■

5. Turn the ignition switch to LOCK (0).
6. Disconnect the fuel tank unit 5P connector.
7. Clear the DTCs with the HDS.
8. Turn the ignition switch to LOCK (0), and then back to ON (II).
9. Wait for at least 30 seconds.
10. Check for DTCs with the HDS.

    Is DTC B1176 indicated?

    YES—Go to step 11.

    NO—Replace the fuel gauge sending unit (see page 11-364).■

11. Disconnect the gauge control module (tach) 36P connector.
12. Check for continuity between gauge control module (tach) 36P connector terminal No. 32 and body ground.

GAUGE CONTROL MODULE (TACH) 36P CONNECTOR

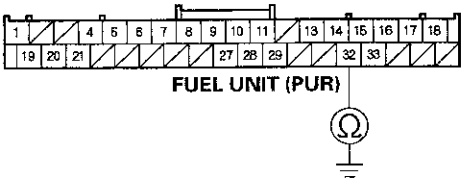

Wire side of female terminals

Is there continuity?

YES—Repair short in the wire between the gauge control module (tach) and the fuel tank unit.■

NO—Replace the gauge control module (tach) (see page 22-255).■

DTC Troubleshooting (cont'd)

DTC B1177: Battery Voltage Abnormal ('06-08 models)

NOTE: If you are troubleshooting multiple DTCs, be sure to follow the instructions in B-CAN System Diagnosis Test Mode A (see page 22-89).

1. Clear the DTCs with the HDS.
2. Turn the ignition switch to LOCK (0), and then back to ON (II).
3. Check for DTCs with the HDS.

   Is DTC B1177 indicated?

   YES—Go to step 8.

   NO—Go to step 4.
4. Clear the DTCs with the HDS.
5. Turn the ignition switch to LOCK (0), and then back to ON (II).
6. Crank the engine.
7. Check for DTCs with the HDS.

   Is DTC B1177 indicated?

   YES—Go to step 8.

   NO—Intermittent failure. The gauge control module (tach) and power supply voltage (IG1) that is supplied to the gauge control module (tach) are OK at this time. The battery may have been discharged, and recovered. ■
8. Test the battery (see page 22-61) and check the charging system.

   Is the battery condition normal and the charging system OK?

   YES—Go to step 9.

   NO—The battery needs a recharge or replacement, or a charging system need to be repaired. ■
9. Turn the ignition switch to ON (II).
10. With the gauge control module (tach) 36P connector still connected, measure the voltage between gauge control module (tach) 36P connector terminal No. 17 and body ground.

    Is there about 7.5 V or more?

    YES—Replace the gauge control module (tach) (see page 22-255). ■

    NO—Repair open or high resistance in the BRN wire between the ignition switch and the gauge control module (tach). ■

DTC B1178: F-CAN Communication Line Error

NOTE: If you are troubleshooting multiple DTCs, be sure to follow the instructions in B-CAN System Diagnosis Test Mode A (see page 22-89).

1. Clear the DTCs with the HDS.
2. Turn the ignition switch to LOCK (0), and then back to ON (II).
3. Make sure the HDS can communicate with the vehicle. If it does not communicate, go to F-CAN Circuit Troubleshooting (see page 11-196).
4. Wait for at least 6 seconds.
5. Check for DTCs with the HDS.

   Are DTCs B1168, B1169, B1170, B1178, B1183, B1184, B1185, and B1187 indicated?

   YES—Go to the indicated DTCs troubleshooting.■

   NO—Intermittent failure, the system is OK at this time. Check for open or short in the wire.■

DTC B1183: Gauge Control Module Lost Communication with the EPS Control Unit (EPS Message)

NOTE: If you are troubleshooting multiple DTCs, be sure to follow the instructions in B-CAN System Diagnosis Test Mode A (see page 22-89).

1. Clear the DTCs with the HDS.
2. Turn the ignition switch to LOCK (0), and then back to ON (II).
3. Wait for at least 6 seconds.
4. Check for DTCs with the HDS.

   Is DTC B1183 indicated?

   YES—Go to step 5.

   NO—Intermittent failure. The gauge control module (tach) is OK at this time. Check for loose or poor connections.■

5. Check for DTCs with the HDS.

   Are DTCs B1168, B1169, B1178, B1183, B1184, B1185, and B1187 all indicated at the same time?

   YES—Troubleshoot DTC B1178.■

   NO—Go to step 6.

6. Check for EPS DTCs with the HDS.

   Are any DTCs indicated?

   YES—Troubleshoot the indicated DTC, then recheck.■

   NO—Go to step 7.

7. Turn the ignition switch to LOCK (0).
8. Disconnect the gauge control module (tach) 36P connector.
9. Disconnect the EPS control unit 28P connector (see page 17-82).

(cont'd)

DTC Troubleshooting (cont'd)

10. Check for continuity between gauge control module (tach) 36P connector terminals No. 1 and No. 19 and EPS control unit 28P connector terminals No. 1 and No. 15 individually.

GAUGE CONTROL MODULE (TACH) 36P CONNECTOR
Wire side of female terminals

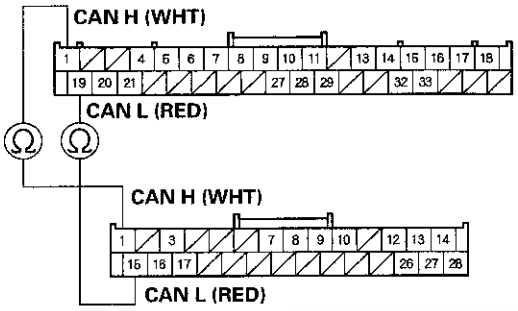

EPS CONTROL UNIT 28P CONNECTOR
Wire side of female terminals

Is there continuity?

YES—Substitute a known-good EPS control unit (see page 17-19) and recheck. If DTC B1183 is still indicated, replace the gauge control module (tach).■

NO—Repair open in the wire.■

DTC B1184: Gauge Control Module Lost Communication with the AHB Servo Unit (RBS Message)

NOTE: If you are troubleshooting multiple DTCs, be sure to follow the instructions in B-CAN System Diagnosis Test Mode A (see page 22-89).

1. Clear the DTCs with the HDS.

2. Turn the ignition switch to LOCK (0), and then back to ON (II).

3. Check for DTCs with the HDS.

   Is DTC B1184 indicated?

   YES—Go to step 4.

   NO—Intermittent failure. The gauge control module (tach) is OK at this time. Check for loose or poor connections.■

4. Check for DTCs with the HDS.

   Are DTCs B1168, B1169, B1178, B1183, B1184, B1185, and B1187 all indicated at the same time?

   YES—Troubleshoot DTC B1178.■

   NO—Go to step 5.

5. Check for IMA brake system DTCs with the HDS (see page 12-5).

   Are any DTCs indicated?

   YES—Troubleshoot the indicated DTC, then recheck.■

   NO—Go to step 6.

6. Turn the ignition switch to LOCK (0).

7. Disconnect the gauge control module (tach) 36P connector.

8. Disconnect the servo unit 25P connector.

9. Check for continuity between gauge control module (tach) 36P connector terminals No. 1 and No. 19 and servo unit 25P connector terminals No. 1 and No. 17 individually.

GAUGE CONTROL MODULE (TACH) 36P CONNECTOR
Wire side of female terminals

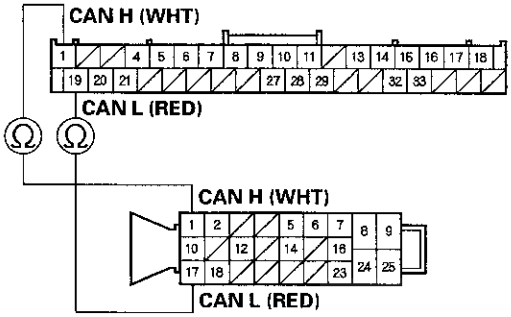

SERVO UNIT 25P CONNECTOR
Wire side of female terminals

Is there continuity?

YES—Substitute a known-good servo unit (see page 19-100) and recheck. If DTC B1184 is still indicated, replace the gauge control module (tach) (see page 22-255).■

NO—Repair open in the wire.■

DTC B1185: Gauge Control Module Lost Communication with the Motor Control Module (MCM) (BATT Message)

NOTE: If you are troubleshooting multiple DTCs, be sure to follow the instructions in B-CAN System Diagnosis Test Mode A (see page 22-89).

1. Clear the DTCs with the HDS.

2. Turn the ignition switch to LOCK (0), and then back to ON (II).

3. Check for DTCs with the HDS.

   Is DTC B1185 indicated?

   YES—Go to step 4.

   NO—Intermittent failure. The gauge control module (tach) is OK at this time. Check for loose or poor connections.■

4. Check for DTCs with the HDS.

   Are DTCs B1168, B1169, B1178, B1183, B1184, B1185, and B1187 all indicated at the same time?

   YES—Troubleshoot DTC B1178.■

   NO—Go to step 5.

5. Check for IMA system DTCs with the HDS (see page 12-5).

   Are any DTCs indicated?

   YES—Troubleshoot the indicated DTC, then recheck.■

   NO—Go to step 6.

6. Turn the ignition switch to LOCK (0).

7. Disconnect the gauge control module (tach) 36P connector.

8. Disconnect the BCM module 40P connector.

(cont'd)

DTC Troubleshooting (cont'd)

9. Check for continuity between gauge control module (tach) 36P connector terminals No. 1 and No. 19 and BCM module 40P connector terminals No. 1 and No. 21 individually.

GAUGE CONTROL MODULE (TACH) 36P CONNECTOR
Wire side of female terminals

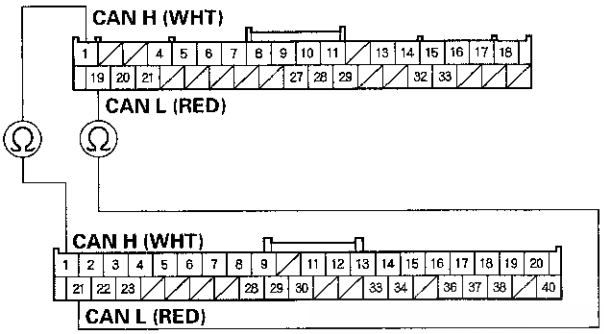

BCM MODULE 40P CONNECTOR
Wire side of female terminals

Is there continuity?

YES—Substitute a known-good motor control module (see page 12-5) and recheck. If DTC B1185 is still indicated, replace the gauge control module (tach) (see page 22-255). ■

NO—Repair open in the wire. ■

DTC B1187: Gauge Control Module Lost Communication with the SRS Unit (SRS Message)

NOTE:
- If you are troubleshooting multiple DTCs, be sure to follow the instructions in B-CAN System Diagnosis Test Mode A (see page 22-89).
- If the HDS does not communicate with the SRS unit, the SRS indicator stay on, go to symptom troubleshooting for SRS indicator stay on, but no DTCs are stored (see page 24-178).

1. Clear the DTCs with the HDS.

2. Turn the ignition switch to LOCK (0), and then back to ON (II).

3. Wait for at least 6 seconds.

4. Check for DTCs with the HDS.

   Is DTC B1187 indicated?

   YES—Go to step 5.

   NO—Intermittent failure, the system is OK at this time. Check for loose or poor connections between the gauge control module and the SRS unit. ■

5. Check for SRS DTCs with the HDS.

   Is any DTCs indicated?

   YES—Go to the indicated DTCs troubleshooting, then recheck.

   NO—Go to step 6.

6. Turn the ignition switch to LOCK (0).

7. Disconnect the gauge control module (tach) 36P connector.

8. Disconnect SRS unit connector A (28P).

9. Check for continuity between gauge control module (tach) 36P connector terminals No. 1 and No. 19 and SRS unit connector A (28P) terminals No. 12 and No. 11 respectively.

GAUGE CONTROL MODULE (TACH) 36P CONNECTOR
Wire side of female terminals

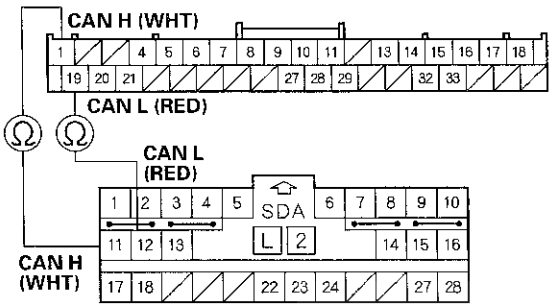

SRS UNIT CONNECTOR A (28P)
Wire side of female terminals

Is there continuity?

YES—Substitute a known-good SRS unit, and recheck. If the indication goes away, replace the original SRS unit. If the DTC is still present, replace the gauge control module (see page 22-255).■

NO—Repair open in the wire.■

Gauge Control Module (Tach) Input Test

NOTE: Before testing, do the gauge control module self-diagnosis function, and make sure the B-CAN communication line is OK.

1. Turn the ignition switch to LOCK (0).

2. Remove the gauge control module (tach) and disconnect the 36P connector from it (see page 22-255).

GAUGE CONTROL MODULE (TACH) 36P CONNECTOR

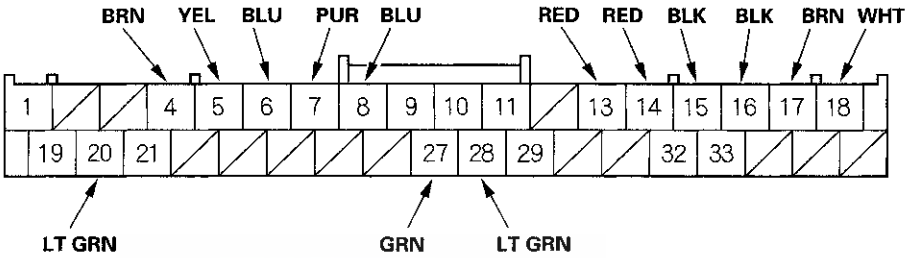

Wire side of female terminals

3. Inspect the connector and socket terminals to be sure they are all making good contact.

   - If the terminals are bent, loose or corroded, repair them as necessary, and recheck the system.
   - If the terminals are OK, go to step 4.

4. With the connector still disconnected, do these input tests at the following connectors.

- If any test indicates a problem, find and correct the cause, then recheck the system.
- If all the input tests prove OK, go to step 5.

Cavity	Wire	Test condition	Test: Desired result	Possible cause if desired result is not obtained
20	LT GRN	Disconnect the gauge control module (speedo) 12P connector	Check for continuity between terminal No. 20 and gauge control module (speedo) 12P connector terminal No. 7: There should be continuity.	An open in the wire
			Check for continuity to ground: There should be no continuity.	A short to ground in the wire
14	RED	Combination light switch ON	Attach to ground: The illuminations of the dash lights, the audio unit, and the climate control unit should come on full bright.	• Faulty bulbs • An open in the wire
13	RED	Combination light switch ON	Attach to ground: The illuminations of the seat heater switches should come on full bright.	• Faulty LEDs • An open in the wire

(cont'd)

Gauge Control Module (Tach) Input Test (cont'd)

5. Reconnect the connector to the gauge control module (tach), and do these input tests at the following connector.

- If any test indicates a problem, find and correct the cause, then recheck the system.
- If all the input tests prove OK, the gauge control module (tach) must be faulty; replace it.

Cavity	Wire	Test condition	Test: Desired result	Possible cause if desired result is not obtained
15	BLK	Under all conditions	Measure the voltage to ground: There should be less than 0.5 V.	• Poor ground (G503) • An open in the wire
16	BLK	Under all conditions	Measure the voltage to ground: There should be less than 0.5 V.	• Poor ground (G504) • An open in the wire
17	BRN	Ignition switch ON (II).	Measure the voltage to ground: There should be battery voltage.	• Blown No. 10 (7.5 A) fuse in the under-dash fuse/relay box • An open in the wire
18	WHT	Under all conditions	Measure the voltage to ground: There should be battery voltage.	• Blown No. 23 (10 A) fuse in the under-hood fuse/relay box • An open in the wire
4	BRN	Ignition switch ON (II), ILLUMI (—) button pressed	Measure the voltage to ground: There should be less than 1 V.	• Poor ground (G501) • Faulty dash lights brightness controller and odometer select/reset switch • An open in the wire
		Ignition switch ON (II), ILLUMI (—) button released	Measure the voltage to ground: There should be more than 5 V.	• Faulty dash lights brightness controller and odometer select/reset switch • A short to ground in the wire

Cavity	Wire	Test condition	Test: Desired result	Possible cause if desired result is not obtained
5	YEL	Ignition switch ON (II), ILLUMI (+) button pressed	Measure the voltage to ground: There should be less than 1 V.	• Poor ground (G501) • Faulty dash lights brightness controller and odometer select/reset switch • An open in the wire
		Ignition switch ON (II), ILLUMI (+) button released	Measure the voltage to ground: There should be more than 5 V.	• Faulty dash lights brightness controller and odometer select/reset switch • A short to ground in the wire
6	BLU	Ignition switch ON (II), SEL/RESET button pressed	Measure the voltage to ground: There should be less than 1 V.	• Poor ground (G501) • Faulty dash lights brightness controller and odometer select/reset switch • An open in the wire
		Ignition switch ON (II), SEL/RESET button released	Measure the voltage to ground: There should be more than 5 V.	• Faulty dash lights brightness controller and odometer select/reset switch • A short to ground in the wire
7	PUR	Ignition switch ON (II), TEMP-FCD mph, km/h CHANGE button pressed	Measure the voltage to ground: There should be less than 1 V.	• Poor ground (G501) • Faulty dash lights brightness controller and odometer select/reset switch • An open in the wire
		Ignition switch ON (II), TEMP-FCD mph, km/h CHANGE button released	Measure the voltage to ground: There should be more than 5 V.	• Faulty dash lights brightness controller and odometer select/reset switch • A short to ground in the wire
8 (Canada models)	BLU	Ignition switch ON (II), washer fluid is half or more in the washer reservoir	Measure the voltage to ground: There should be less than 1 V.	• Poor ground (G401) • Faulty washer fluid level switch • An open in the wire
		Ignition switch ON (II), washer fluid is empty in the washer reservoir	Measure the voltage to ground: There should be more than 5 V.	• Faulty washer fluid level switch • A short to ground in the wire
27	GRN	Ignition switch ON (II), brake fluid is full level in the reservoir	Measure the voltage to ground: There should be less than 1 V.	• Poor ground (G401) • Faulty brake fluid level switch • An open in the wire
		Ignition switch ON (II), brake fluid is lower level in the reservoir	Measure the voltage to ground: There should be more than 5 V.	• Faulty brake fluid level switch • A short to ground in the wire
28	LT GRN	Ignition switch ON (II), parking brake lever pulled	Measure the voltage to ground: There should be less than 1 V.	• Faulty parking brake switch • An open in the wire
		Ignition switch ON (II), parking brake lever released	Measure the voltage to ground: There should be more than 5 V.	• Faulty parking brake switch • A short to ground in the wire

Gauge Control Module (Speedo) Input Test

NOTE: Before testing, do the gauge control module self-diagnosis function, and make sure the B-CAN communication line is OK.

1. Turn the ignition switch to LOCK (0).

2. Remove the gauge control module (Speedo) and disconnect the 12P connector from it (see page 22-255).

GAUGE CONTROL MODULE (SPEEDO) 12P CONNECTOR

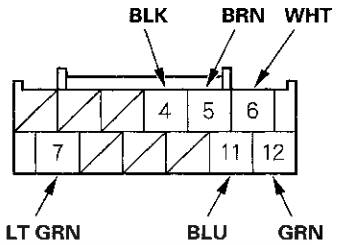

Wire side of female terminals

3. Inspect the connector and socket terminals to be sure they are all making good contact.

   - If the terminals are bent, loose or corroded, repair them as necessary, and recheck the system.
   - If the terminals are OK, go to step 4.

4. With the connector still disconnected, do these input tests at the following connector.

   - If any test indicates a problem, find and correct the cause, then recheck the system.
   - If all the input tests prove OK, go to step 5.

Cavity	Wire	Test condition	Test: Desired result	Possible cause if desired result is not obtained
11	BLU	Ignition switch to ON (II), turn signal switch in LEFT	Measure the voltage to ground: There should be battery voltage when the lights are flashing.	• Faulty MICU • Faulty combination light switch • An open in the wire
12	GRN	Ignition switch to ON (II), turn signal switch in RIGHT	Measure the voltage to ground: There should be battery voltage when the lights are flashing.	• Faulty MICU • Faulty combination light switch • An open in the wire
7	LT GRN	Disconnect the gauge control module (tach) 36P connector	Check for continuity between terminal No. 7 and gauge control module (tach) 36P connector terminal No. 20: There should be continuity.	An open in the wire
			Check for continuity between terminal No. 7 and body ground (gauge control module (tach) 36P connector disconnected): There should be no continuity.	A short to ground in the wire

5. Reconnect the connector to the gauge control module (speedo), and do these input tests at the following connector.

   - If any test indicates a problem, find and correct the cause, then recheck the system.
   - If the input test proves OK, the gauge control module (speedo) must be faulty; replace it.

Cavity	Wire	Test condition	Test: Desired result	Possible cause if desired result is not obtained
6	WHT	Under all conditions	Measure the voltage to ground: There should be battery voltage.	• Blown No. 23 (10 A) fuse in the under-hood fuse/relay box • An open in the wire
5	BRN	Ignition switch to ON (II)	Measure the voltage to ground: There should be battery voltage.	• Blown No. 10 (7.5 A) fuse in the under-dash fuse/relay box • An open in the wire
4	BLK	Under all conditions	Measure the voltage to ground: There should be less than 0.5 V.	• Poor ground (G504) • An open in the wire

Rewriting the ODO Data and Transferring the Maintenance Minder Data to a New Gauge Control Module

NOTE:
- Obtain a new gauge control module before starting the rewriting process.
- Rewriting is not possible on a gauge control module that will not communicate with the HDS.
- Make sure that the HDS shows the correct VIN for the vehicle you are working on.
- Once you have started this procedure, you must complete it before removing the HDS from the DLC.
- Connect a battery jumper box (not a battery charger) to insure that correct battery voltage will be maintained.

1. Before replacing the gauge control module, connect the HDS.
2. Select GAUGES from the BODY ELECTRICAL system select menu with the HDS.
3. Select "Gauge Control Module Replacement (ODO Rewrite)" from the ADJUSTMENT menu, and follow the instructions on the display to retrieve the ODO value and the Maintenance Minder data.
4. Replace the gauge control module.
5. Follow the instructions on the display to write the new ODO value and Maintenance Minder data to a new gauge control module. If the data transfer fails, refer to the instructions below to release the locked ODO value.

Release Locked odometer mileage to the original gauge control module.

If, after you attempt to transfer mileage, the odometer display has dashes (———), is garbled, or shows an incorrect value, the original gauge control module needs to be unlocked and restored to its original state:

1. Confirm that you have the latest HDS version of software.
2. Make sure that the HDS shows the correct VIN for the vehicle you are working on.
3. With the ignition switch to LOCK (0), reconnect the original gauge control module.
4. Completely re-boot the HDS.
5. Clear any stored DTCs.
6. Navigate to Body Electric/Gauges/Adjustment/ Instrument Panel Replacement.
7. Select "3. Releasing Locked ODO Value."
8. Follow the prompts and the Odometer mileage will be restored.
9. Start over and make sure the screen prompts are followed.

Gauge Control Module Replacement

Tachometer

NOTE: Before replacing the gauge control module, do the "Rewriting the ODO Data and Transferring the Maintenance Minder Data to a New Gauge Control Module" (see page 22-254).

1. Remove the subdisplay visor assembly (see page 20-87).

2. Remove the three screws from the gauge control module (tach) (A).

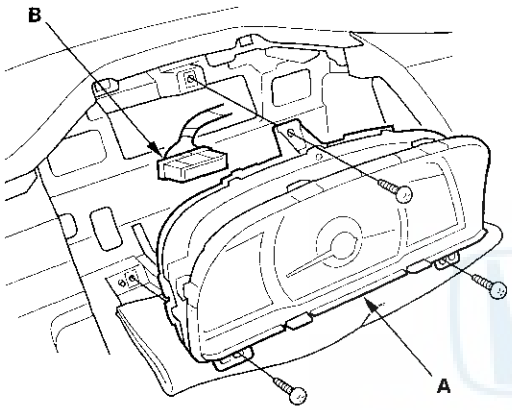

3. Disconnect the 36P connector (B) from the gauge control module (tach).

4. Install the gauge control module (tach) in the reverse order of removal.

Speedometer

1. Remove the meter lower visor assembly (see page 20-87).

2. Remove the three screws from the gauge control module (speedo) (A).

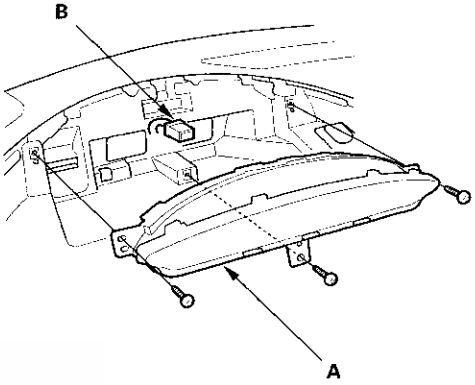

3. Disconnect the 12P connector (B) from the gauge control module (speedo).

4. Install the gauge control module (speedo) in the reverse order of removal.

Dash Lights Brightness Controller and Odometer Select/Reset Switch Test/ Replacement

1. Remove the subdisplay visor (see page 20-87) and disconnect its connectors.

2. Remove the two screws and the dash lights brightness controller and odometer select/reset switch (A).

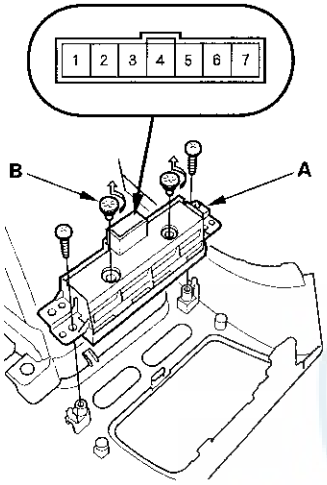

3. Check for continuity between the terminals in each switch position according the table.

Position \ Terminal	1	2	4	6	7	3		5
SEL/RESET button pressed			○	─	○			
TEMP-FCD mph-km/h change button pressed			○	─	○			
(+) button pressed	○	─	○			○	─	○
(−) button pressed		○	─	○				

4. If the continuity is not as specified, replace the bulbs (B) or the dash lights brightness controller and odometer select/reset switch.

5. Install the dash lights brightness controller and odometer select/reset switch in the reverse order of removal.

Outside Air Temperature Indicator Calibration

NOTE: To test the outside air temperature sensor (see page 21-91).

Description

The outside temperature sensor is located behind the center of the front bumper. The gauge control module (tach) uses measurements from this sensor to display the outside air temperature.
Because of the location of the sensor, it may be affected by heat reflection from the road, engine and radiator heat or hot exhaust from surrounding traffic.
These conditions can heat soak the outside air temperature sensor and cause inaccurate readings.
Logic has been written into the gauge control module (tach) to help prevent abnormal of fluctuating outside air temperature indicator readings.

Outside Air Temperature Indicator Logic

Initial outside air temperature indication after the ignition switch is turned to ON (II).

- If the engine coolant temperature is 140 °F (60 °C) or higher when the ignition switch is turned to ON (II), the outside air temperature indicated the last time the key was turned off will be displayed regardless of the current temperature measured by the outside air temperature sensor.
- If the engine coolant temperature is 139 °F (59 °C) or lower when the ignition switch is turned to ON (II), the current temperature measured by the outside air temperature sensor will be indicated.

Update to the outside air temperature indicator while driving

If the temperature measured by the outside air temperature sensor is greater than the temperature on the outside air temperature indicator, the outside air temperature indicator will increase by 1.8 °F (1 °C) per minute after the vehicle speed is greater than 19 mph (30 km/h) for more than 1 minute and 30 seconds. It will continue to increase until the current outside air temperature is indicated. So, the first change to the outside air temperature indicator is 1 minute and 30 seconds after the vehicle speed is greater than 19 mph (30 km/h). If the vehicle speed drops below 19 mph (30 km/h), the indicator will not update again until the vehicle speed is increased to 19 mph (30 km/h) or more for more than 1 minute and 30 seconds again.
If the outside air temperature is less than the indicated temperature, the temperature will decrease 1 °F every 1.1 seconds (1 °C every 2 seconds) until the current outside air temperature is indicated regardless of vehicle speed.

Troubleshooting

If the indicator displays "— — —" for more than 2 seconds after selecting the outside air temperature display mode, check the gauge control module self-diagnosis (see page 22-223).

(cont'd)

Outside Air Temperature Indicator Calibration (cont'd)

Calibration

The outside air temperature indicator's displayed temperature can be recalibrated ±5 °F (or ±3 °C) to meet the client's expectations.

1. Turn the ignition switch to ON (II).
2. Select the outside air temperature display.
3. Press and hold the SEL/RESET button for 10 seconds. While you continue to hold the button, the display will scroll through temperature settings from +5 °F to −5 °F (or +3 °C to −3 °C) as shown.

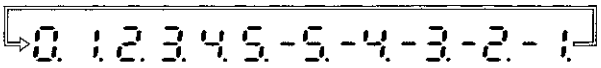

4. When the desired correction value appears on the display, release the button, and the recalibrated outside air temperature will be displayed.
   Each time a desired correction value is entered, it replaces the previous value.

   Example:
   Incorrect value = **68 °F (20 °C)**

   Desired correction value = **+2 °F (+1 °C)**
   Correct valve = **70 °F (21 °C)**

   Desired correction value = **−2 °F (−1 °C)**
   Correct valve = **66 °F (19 °C)**

   NOTE: The recalibration temperature is not the value the sensor sees. Therefore the temperature can only be adjusted ± degrees from the sensor.

NOTE: To recalibrate the display to the true temperature, remove the outside air temperature sensor (A), but leave it connected. Submerge the sensor and a thermometer (B) in a container of ice water (C). Select the calibration mode as described above, then recalibrate the display to the true temperature.

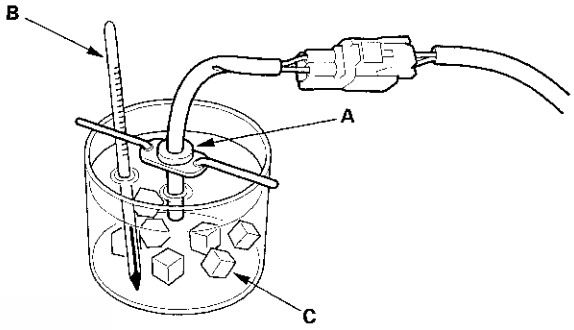

Component Location Index

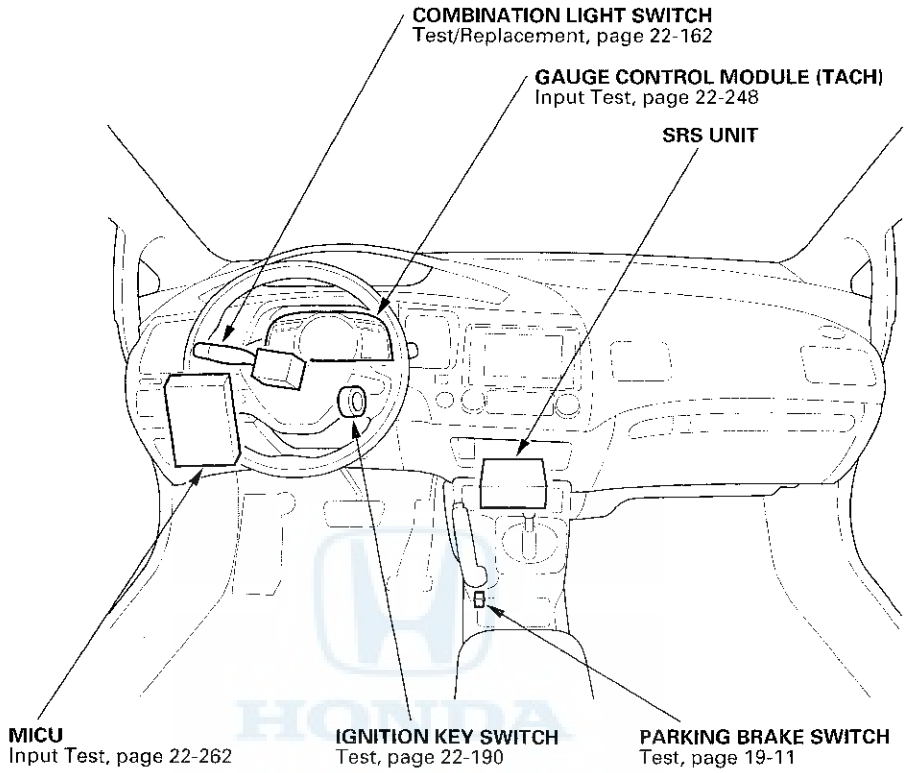

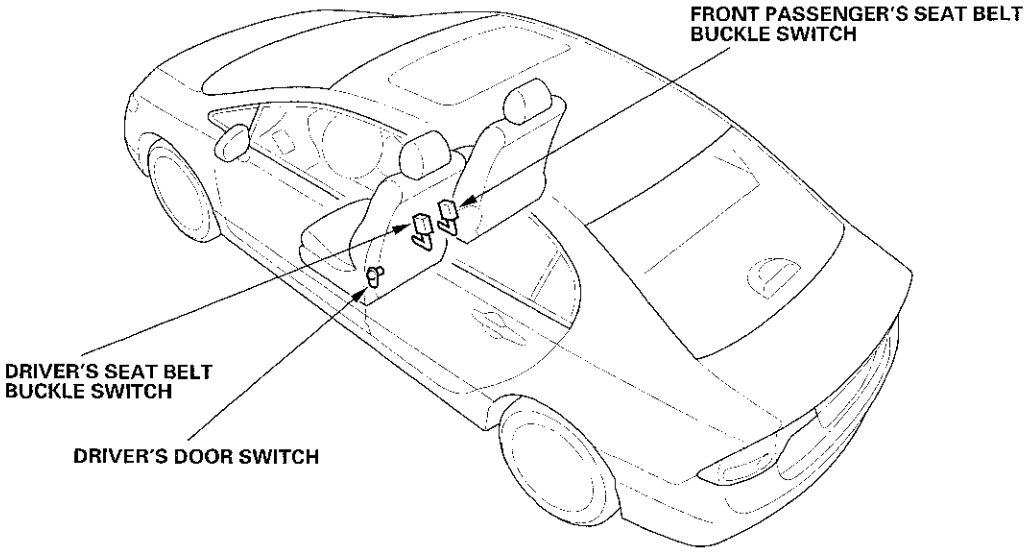

Circuit Diagram

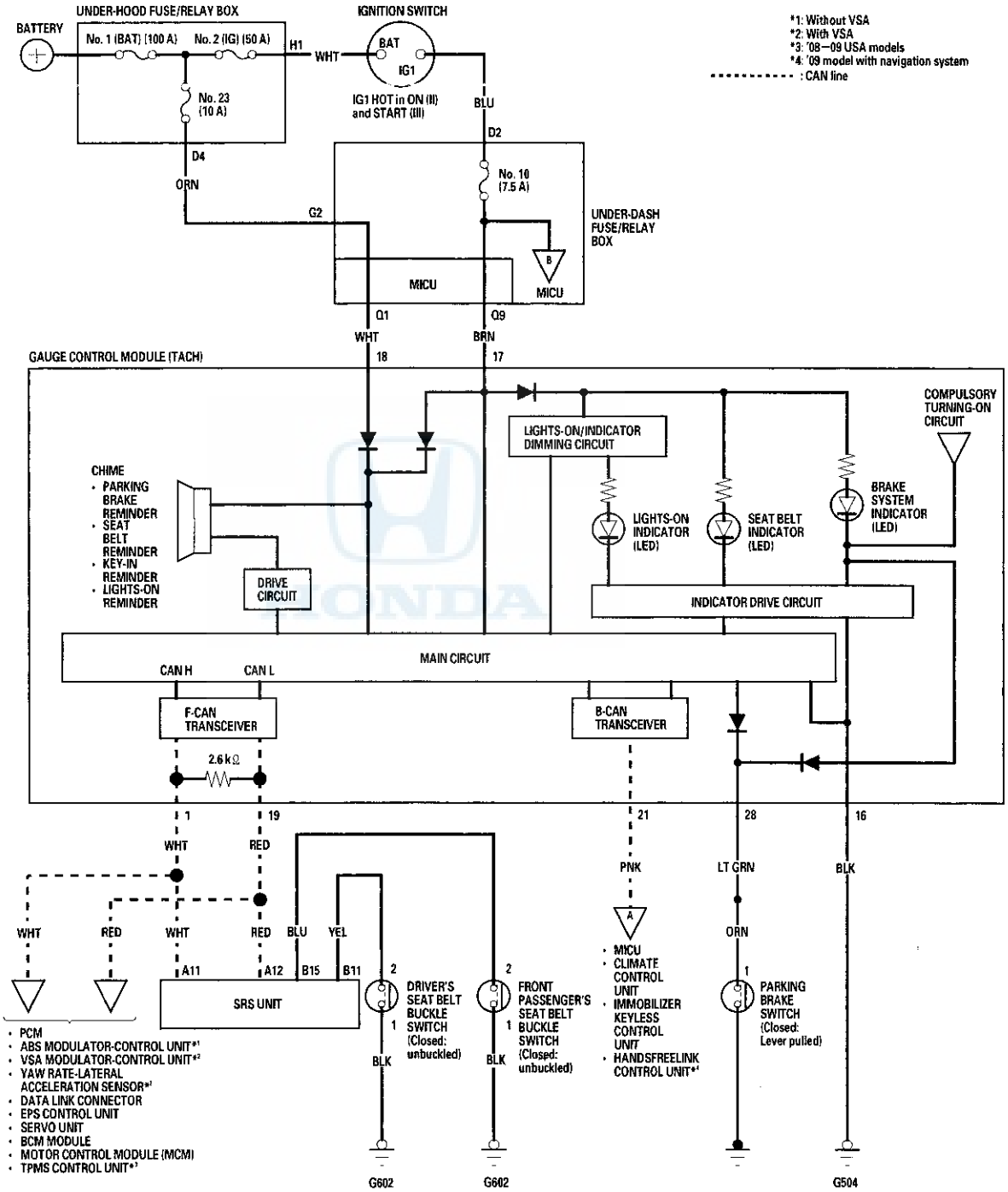

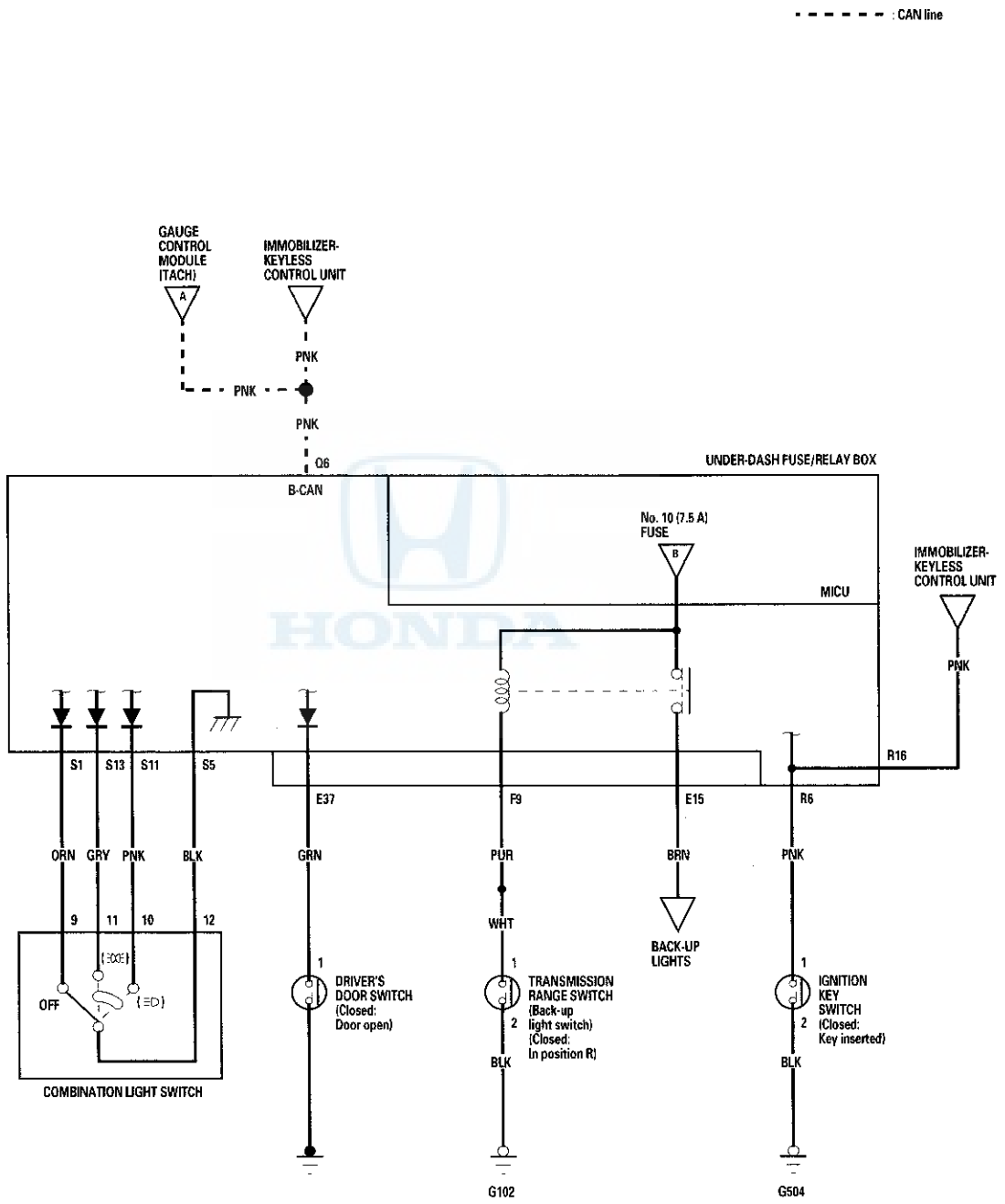
: CAN line
GAUGE CONTROL MODULE (TACH)
A
IMMOBILIZER-KEYLESS CONTROL UNIT
PNK
PNK
PNK
Q6
B-CAN
UNDER-DASH FUSE/RELAY BOX
No. 10 (7.5 A) FUSE
B
MICU
IMMOBILIZER-KEYLESS CONTROL UNIT
PNK
R16
S1
S13
S11
S5
E37
F9
E15
R6
ORN
GRY
PNK
BLK
GRN
PUR
BRN
PNK
9
11
10
12
WHT
BACK-UP LIGHTS
OFF
1
DRIVER'S DOOR SWITCH (Closed: Door open)
1
TRANSMISSION RANGE SWITCH (Back-up light switch) (Closed: In position R)
2
BLK
1
IGNITION KEY SWITCH (Closed: Key inserted)
2
BLK
COMBINATION LIGHT SWITCH
G102
G504

MICU Input Test

1. Turn the ignition switch to LOCK (0).
2. Remove the left kick panel (see page 20-54).
3. Disconnect driver's under-dash fuse/relay box connectors E, F, R, and S.

   NOTE: All connector views are shown from wire side of female terminals.

UNDER-DASH FUSE/RELAY BOX CONNECTOR E (42P)

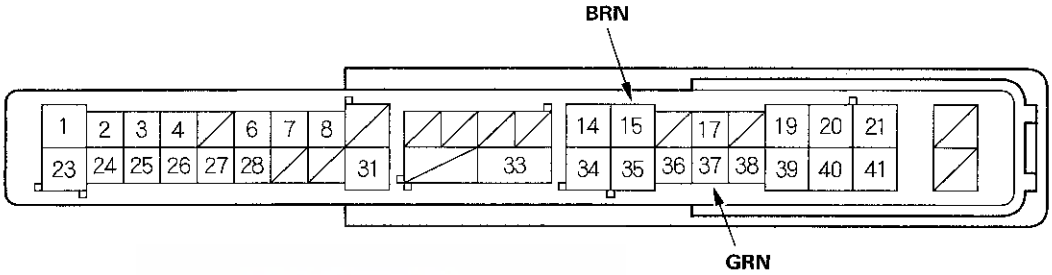

UNDER-DASH FUSE/RELAY BOX CONNECTOR F (34P)

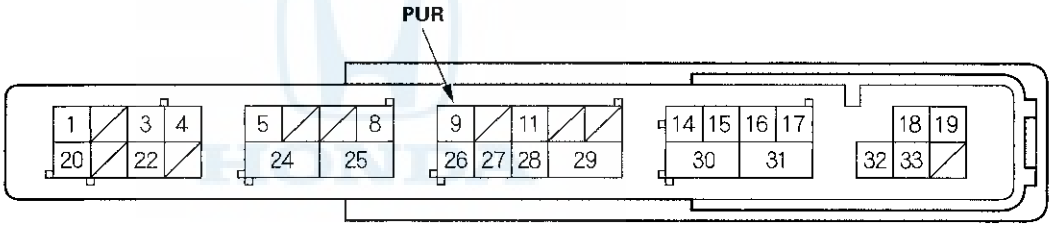

UNDER-DASH FUSE/RELAY BOX CONNECTOR R (20P)

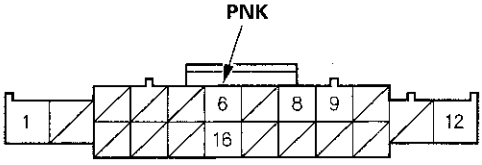

UNDER-DASH FUSE/RELAY BOX CONNECTOR S (20P)

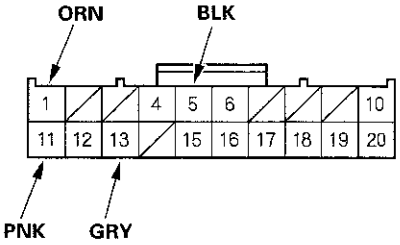

4. Inspect the connector and socket terminals to be sure they are all making good contact.
   - If the terminals are bent, loose or corroded, repair them as necessary and recheck the system.
   - If the terminals look OK, go to step 5.

5. With the under-dash fuse/relay box connectors and MICU connectors still disconnected, do this input test at the following connector.

- If any test indicates a problem, find and correct the cause, then recheck the system.
- If all the input tests prove OK, go to step 6.

Cavity	Wire	Test condition	Test: Desired result	Possible cause if desired result is not obtained
E15	BRN	Under all conditions	Connect battery power to the terminal E15: The back-up lights should come on.	• Poor ground (G701) • Blown bulbs • An open in the wire

6. Reconnect the under-dash fuse/relay box connectors and MICU connectors, then do there input tests at the following connectors.

- If any test indicates a problem, find and correct the cause, then recheck the system.
- If all the input tests prove OK, the MICU must be faulty; replace the under-dash fuse/relay box assembly.

Cavity	Wire	Test condition	Test: Desired result	Possible cause if desired result is not obtained
E37	GRN	Driver's door open	Measure the voltage to ground: There should be less than 1 V.	• Faulty driver's door switch • An open in the wire
		Driver's door closed	Measure the voltage to ground: There should be more than 5 V.	• Faulty driver's door switch • A short to ground in the wire
F9	PUR	Transmission range switch in R	Measure the voltage to ground: There should be less than 1 V.	• Poor ground (G102) • Faulty transmission range switch • An open in the wire
		Transmission range switch in any other position than R	Measure the voltage to ground: There should be more than 5 V.	• Faulty transmission range switch • A short to ground in the wire
R6	PNK	Ignition key inserted into the ignition switch	Measure the voltage to ground: There should be less than 1 V.	• Poor ground (G504) • Faulty ignition key switch • An open in the wire
		Ignition switch to LOCK (0) and ignition key removed from the ignition switch	Measure the voltage to ground: There should be more than 5 V.	• Faulty ignition key switch • A short to ground in the wire
S1	ORN	Combination light switch OFF	Measure the voltage between terminals S1 and S5: There should be less than 1 V.	• Faulty combination light switch • An open in the wire
		Combination light switch in any other position than OFF	Measure the voltage between terminals S1 and S5: There should be more than 5 V.	• Faulty combination light switch • A short to ground in the wire
S11	PNK	Combination light switch (Headlight position) ON	Measure the voltage between terminals S11 and S5: There should be less than 1 V.	• Faulty combination light switch • An open in the wire
		Combination light switch OFF	Measure the voltage between terminals S11 and S5: There should be more than 5 V.	• Faulty combination light switch • A short to ground in the wire
S13	GRY	Combination light switch (SMALL position) ON	Measure the voltage between terminals S13 and S5: There should be less than 1 V.	• Faulty combination light switch • An open in the wire
		Combination light switch OFF	Measure the voltage between terminals S13 and S5: There should be more than 5 V.	• Faulty combination light switch • A short to ground in the wire

Accessory Power Sockets

Component Location Index

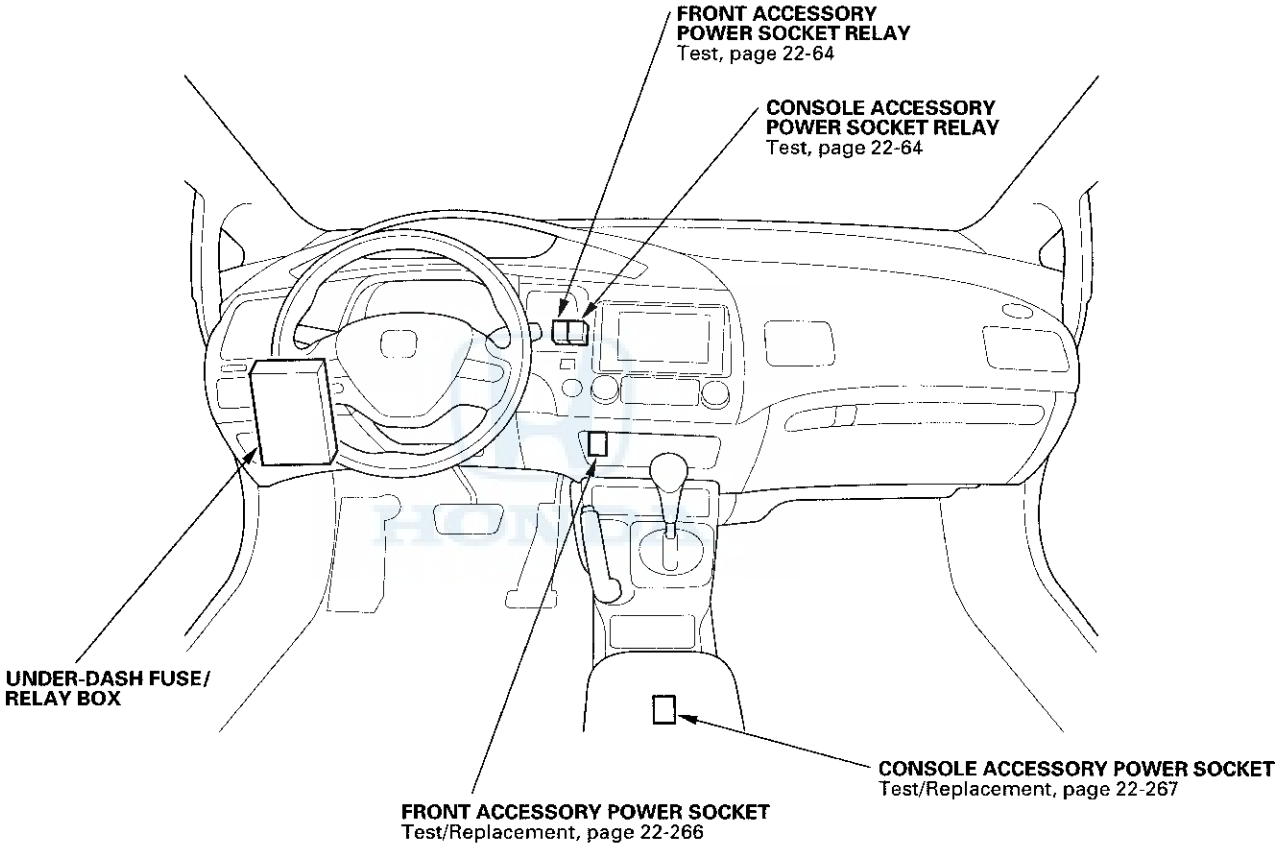

Circuit Diagram

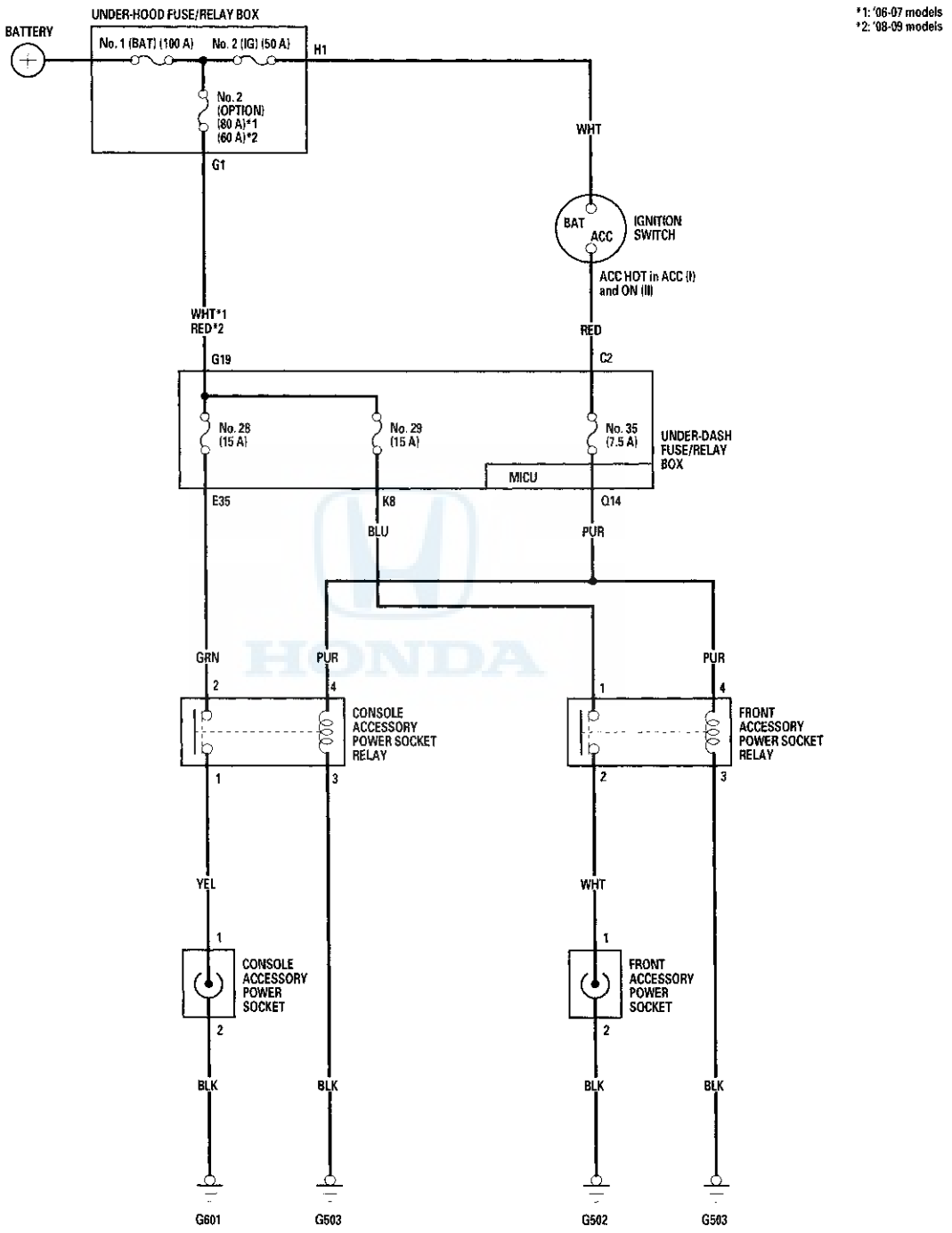

Accessory Power Sockets

Front Accessory Power Socket Test/Replacement

NOTE: If both the front and console accessory power sockets do not work, check the No. 35 (7.5 A) fuse in the under-dash fuse/relay box.

1. Remove the center panel:

   - With audio:
     - '06-08 models (see page 23-70)
     - '09 model (see page 23-232)
   - With navigation:
     - '06-08 models (see page 23-143)
     - '09 model (see page 23-330)

2. Disconnect the 2P connector (A) from the front accessory power socket (B).

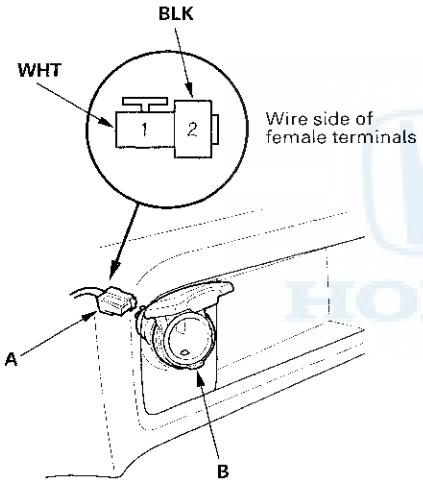

3. Inspect the connector terminals to make sure they are all making good contact.

   - If the terminals are bent, loose, or corroded, repair them as necessary, and recheck the system.
   - If the terminals look OK, go to step 4.

4. Turn the ignition switch to ACC (I), and measure the voltage between front accessory power socket 2P connector terminal No. 1 and body ground. There should be battery voltage.

   - If there is battery voltage, go to step 5.
   - If there is no battery voltage, check for:
     - Blown No. 29 (15 A) fuse in the under-dash fuse/relay box.
     - Faulty front accessory power socket relay.
     - Poor ground (G 503).
     - An open in the wire.

5. Check for continuity between front accessory power socket 2P connector terminal No. 2 and body ground. There should be continuity.

   - If there is continuity, replace the power socket; go to step 6.
   - If there is no continuity, check for:
     - Poor ground (G 502).
     - An open in the wire.

6. Remove the socket (A).

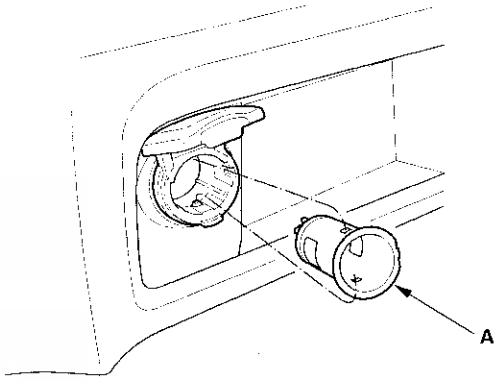

7. Remove the housing (A) from the panel (B).

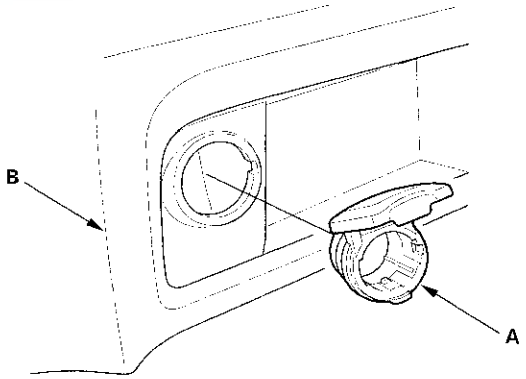

8. Install the power socket in the reverse order of removal.

Console Accessory Power Socket Test/Replacement

NOTE: If both the front and console accessory power sockets do not work, check the No. 35 (7.5 A) fuse in the under-dash fuse/relay box.

1. Remove the center console (see page 20-79).

2. Disconnect the 2P connector (A) from the console accessory power socket (B).

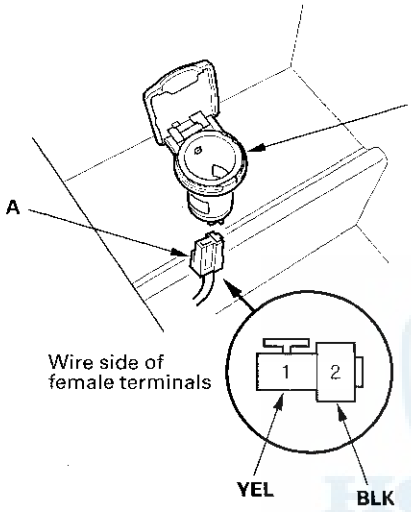

3. Inspect the connector terminals to make sure they are all making good contact.

   - If the terminals are bent, loose, or corroded, repair them as necessary, and recheck the system.
   - If the terminals look OK, go to step 4.

4. Turn the ignition switch to ACC (I), and measure the voltage between console accessory power socket 2P connector terminal No. 1 and body ground. There should be battery voltage.

   - If there is battery voltage, go to step 5.
   - If there is no battery voltage, check for:
     - Blown No. 28 (15 A) fuse in the under-dash fuse/relay box.
     - Faulty console accessory power socket relay.
     - Poor ground (G 503).
     - An open in the wire.

5. Check for continuity between console accessory power socket 2P connector terminal No. 2 and body ground. There should be continuity.

   - If there is continuity, replace the power socket; go to step 6.
   - If there is no continuity, check for:
     - Poor ground (G 601).
     - An open in the wire.

6. Remove the socket (A).

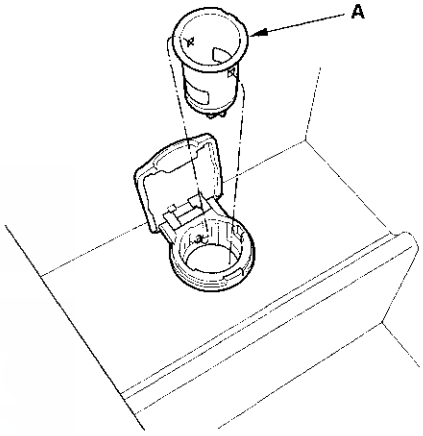

7. Remove the housing (A) from the panel (B).

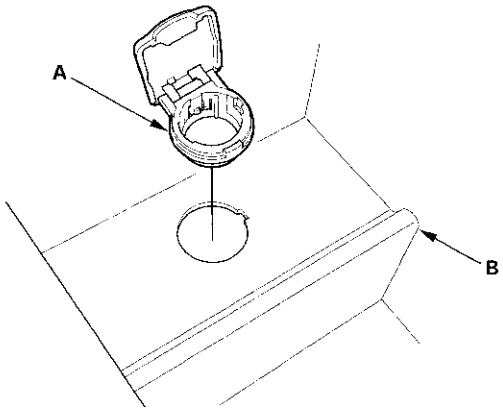

8. Install the power socket in the reverse order of removal.

Component Location Index

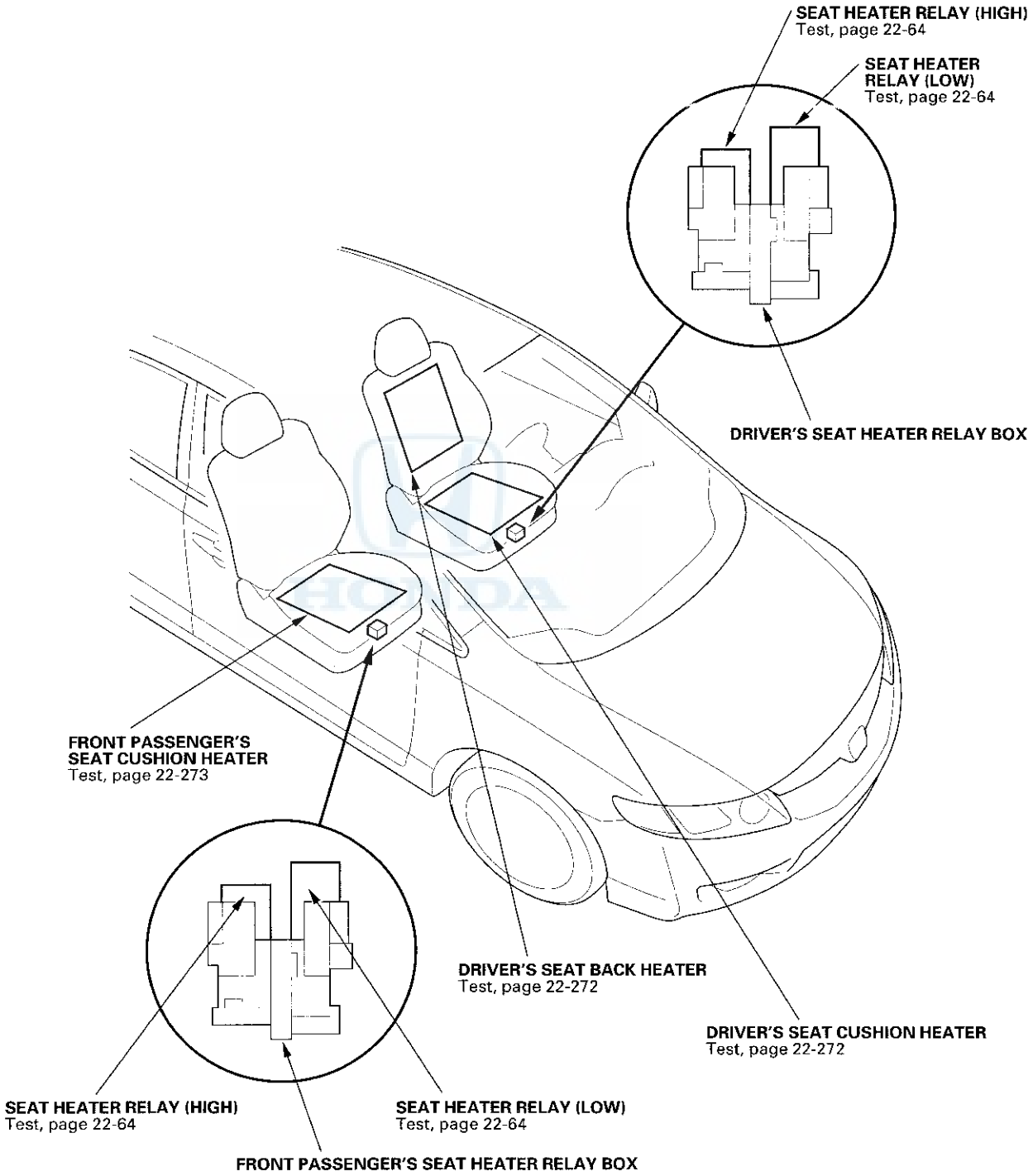

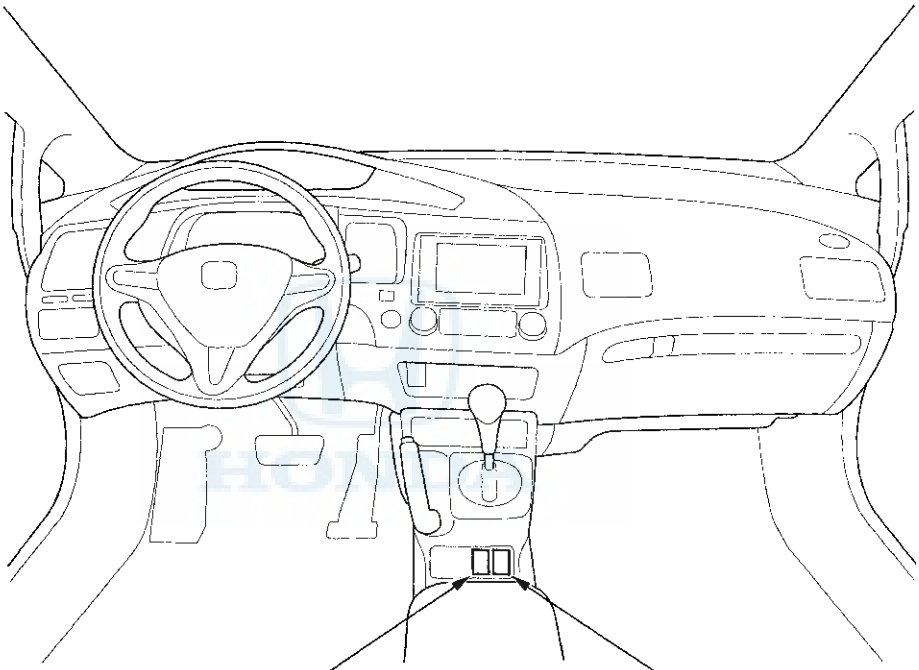

DRIVER'S SEAT HEATER SWITCH
Test/Replacement, page 22-272

FRONT PASSENGER'S SEAT HEATER SWITCH
Test/Replacement, page 22-272

Circuit Diagram

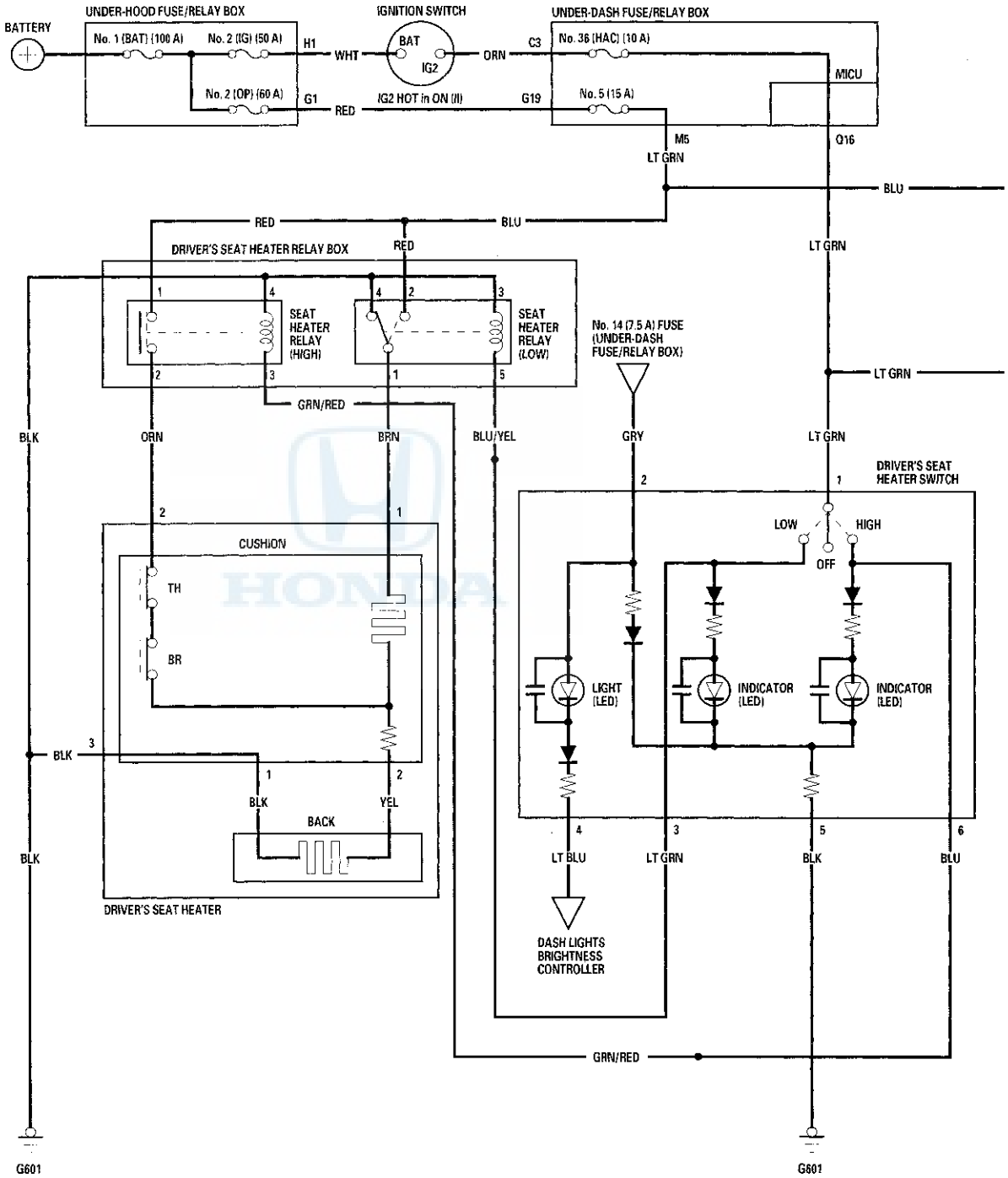

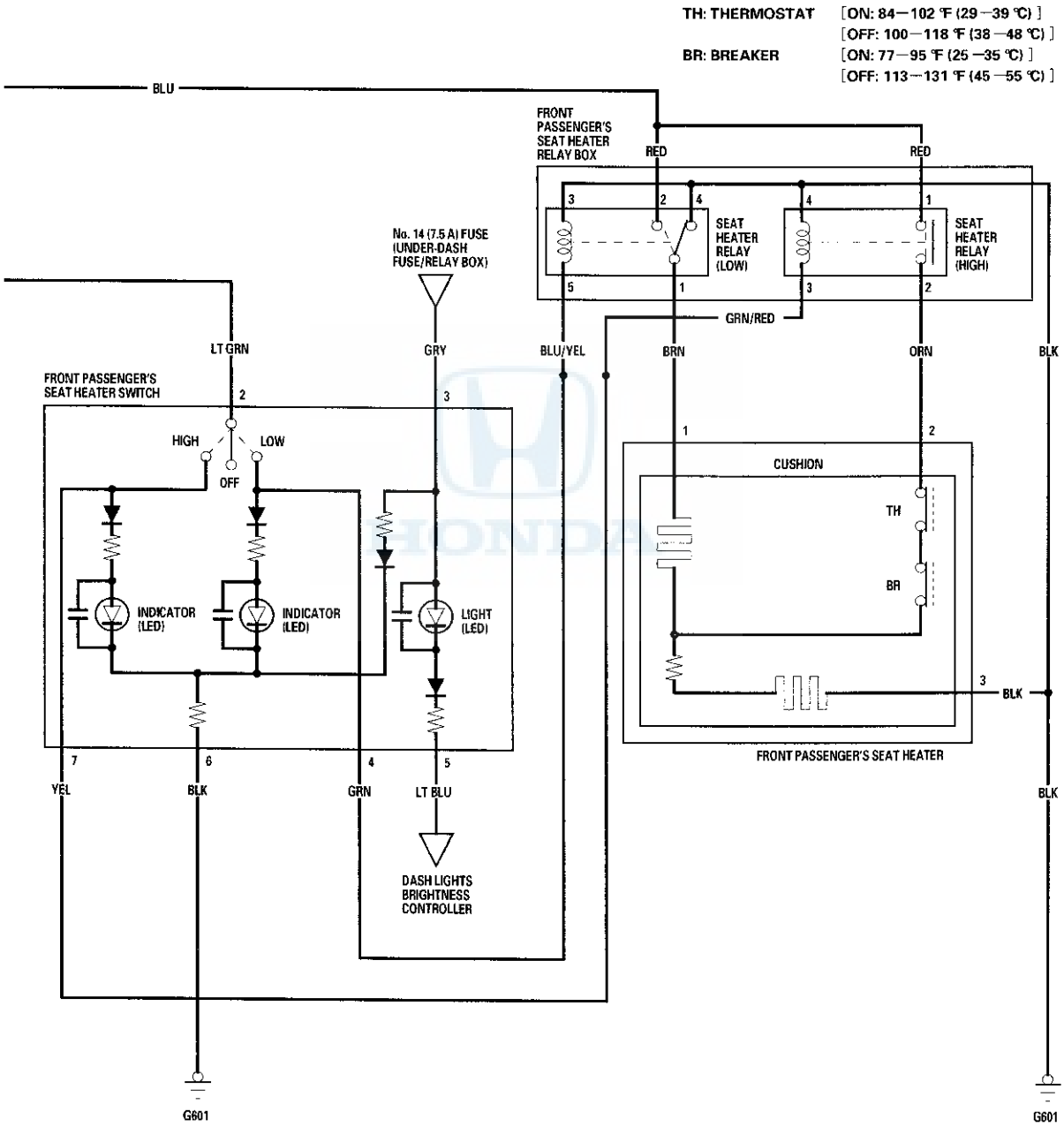
TH: THERMOSTAT [ON: 84—102 °F (29—39 °C)]
[OFF: 100—118 °F (38—48 °C)]
BR: BREAKER [ON: 77—95 °F (25—35 °C)]
[OFF: 113—131 °F (45—55 °C)]
BLU
FRONT PASSENGER'S SEAT HEATER RELAY BOX
RED
RED
SEAT HEATER RELAY (LOW)
SEAT HEATER RELAY (HIGH)
No. 14 (7.5 A) FUSE (UNDER-DASH FUSE/RELAY BOX)
GRN/RED
LT GRN
GRY
BLU/YEL
BRN
ORN
BLK
FRONT PASSENGER'S SEAT HEATER SWITCH
HIGH
LOW
OFF
INDICATOR (LED)
INDICATOR (LED)
LIGHT (LED)
CUSHION
TH
BR
BLK
FRONT PASSENGER'S SEAT HEATER
YEL
BLK
GRN
LT BLU
BLK
DASH LIGHTS BRIGHTNESS CONTROLLER
G601
G601

Seat Heaters

Switch Test/Replacement

1. Remove the center console front panel (see page 20-79).

2. Disconnect the 6P (or 7P*) connector from the seat heater switch (A), then remove the two screws and seat heater switch.
   *: Front passenger's seat heater switch

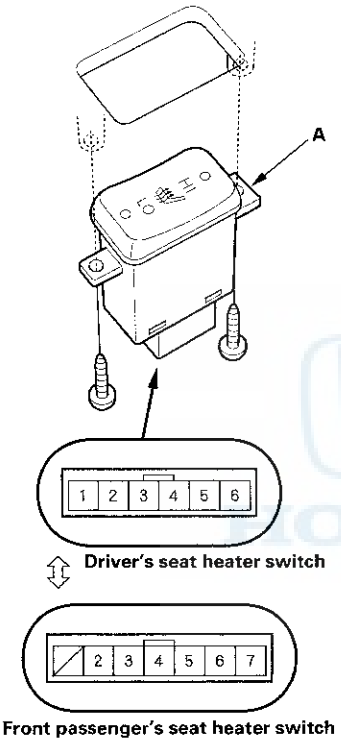

3. Check for continuity between the terminals in each switch position according to the table.

Position \ Terminal		1 [2]	2 [3]	3 [4]	4 [5]	5 [6]	6 [7]
ON	HIGH	○					○
	LOW	○		○			
OFF							

[ ] : **Front passenger's seat heater switch**

4. If the continuity is not as specified, replace the switch.

5. Install the seat heater switch in the reverse order removal.

Seat Heater Test

Driver's

1. Remove the driver's seat (see page 20-105).

2. Disconnect the 3P connector (A) and 2P connector (B) from the seat heater.

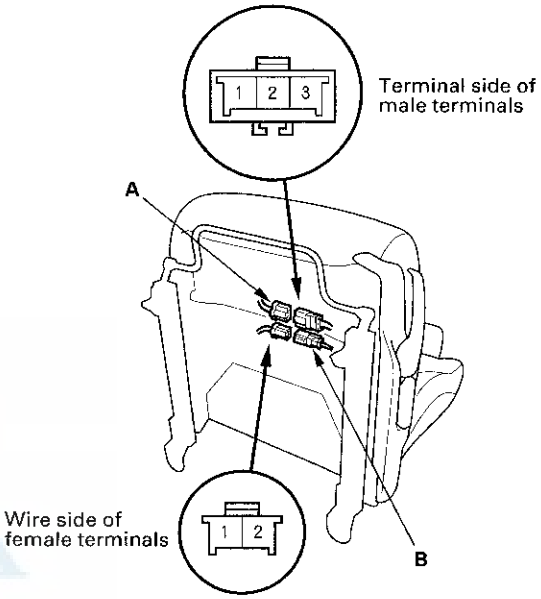

3. Check for continuity between seat-back heater 2P connector (female terminals) terminals No. 1 and No. 2. There should be continuity.

4. Reconnect the 2P connector.

5. Check for continuity between seat-cushion heater 3P connector (male terminals) terminal No. 1 and seat-back heater 2P connector (female terminals) terminal No. 2, and seat-cushion heater 3P connector (male terminals) terminals No. 2 and No. 3. There should be continuity.

SEAT-CUSHION HEATER 3P CONNECTOR
Terminal side of male terminals

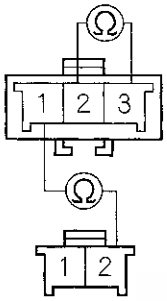

SEAT-BACK HEATER 2P CONNECTOR
Wire side of female terminals

6. If the continuity is not as specified, replace the appropriate seat heater.

Front Passenger's

1. Remove the front passenger's seat (see page 20-105).

2. Disconnect the 3P connector (A) from the seat heater.

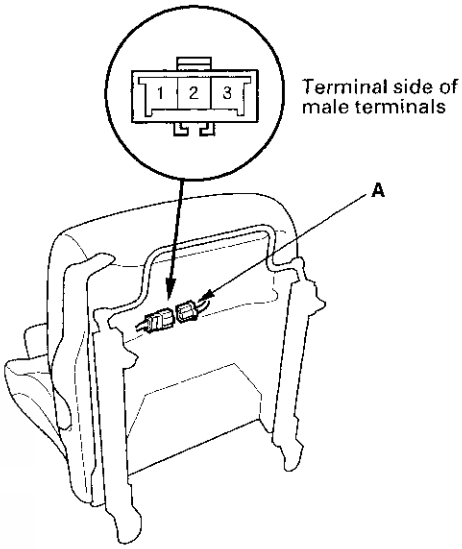

3. Check for continuity between seat-cushion heater 3P connector (male terminals) terminals No. 1 and No. 3, and seat-cushion heater 3P connector (male terminals) terminals No. 2 and No. 3. There should be continuity.

4. If the continuity is not as specified, replace the seat heater.

Component Location Index

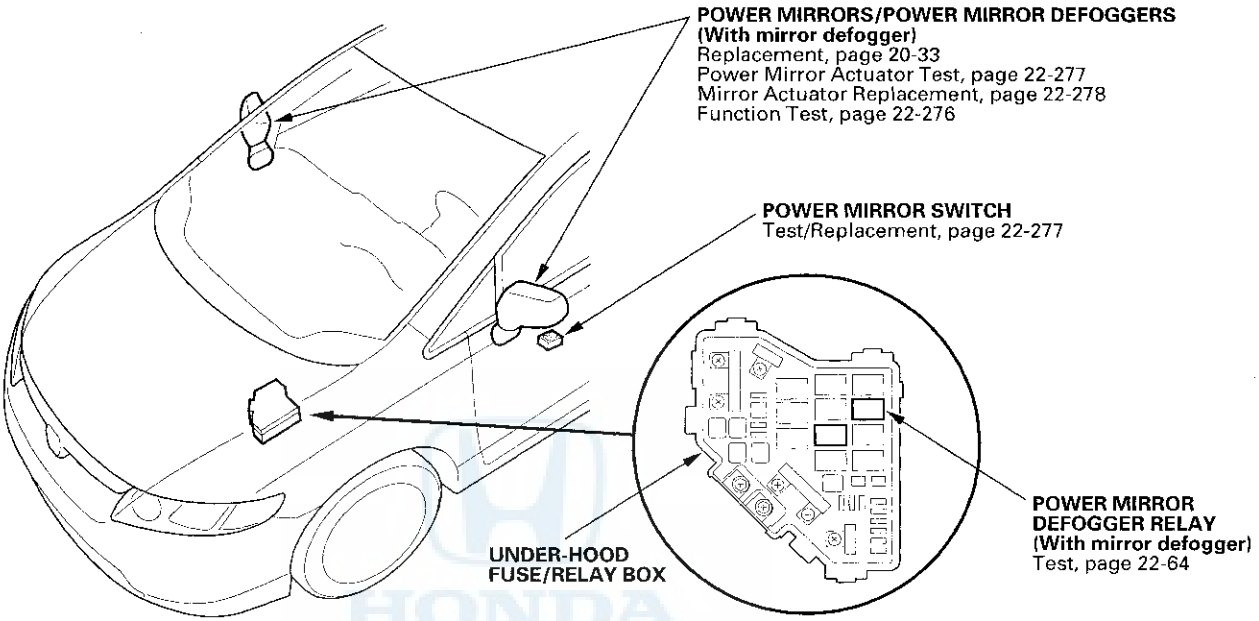

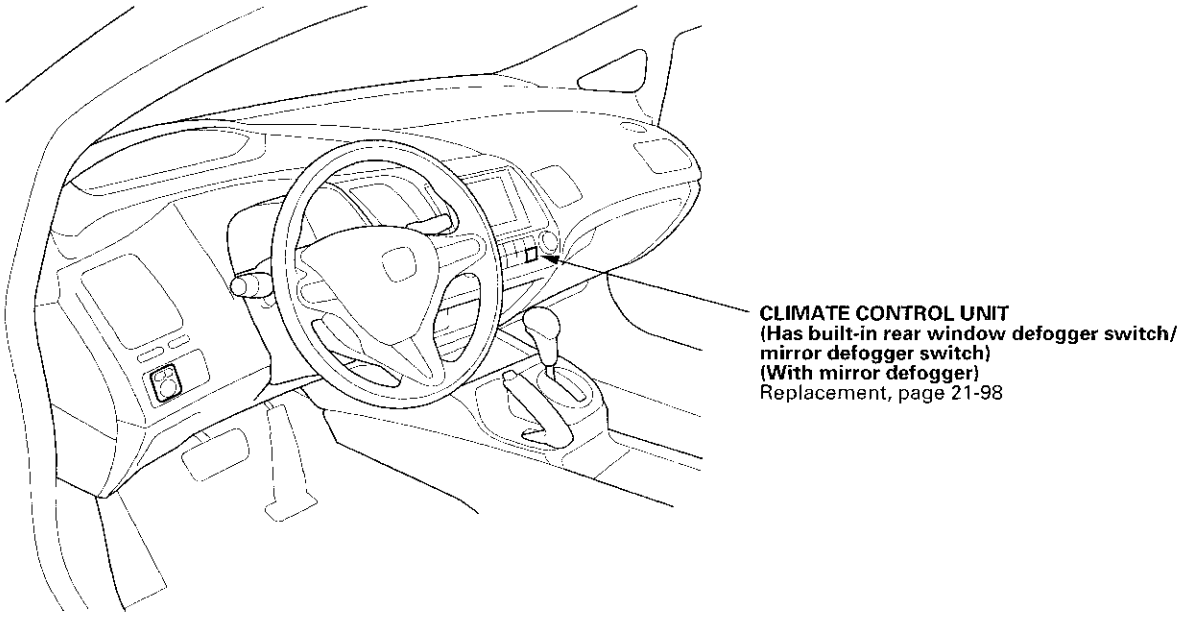

Circuit Diagram

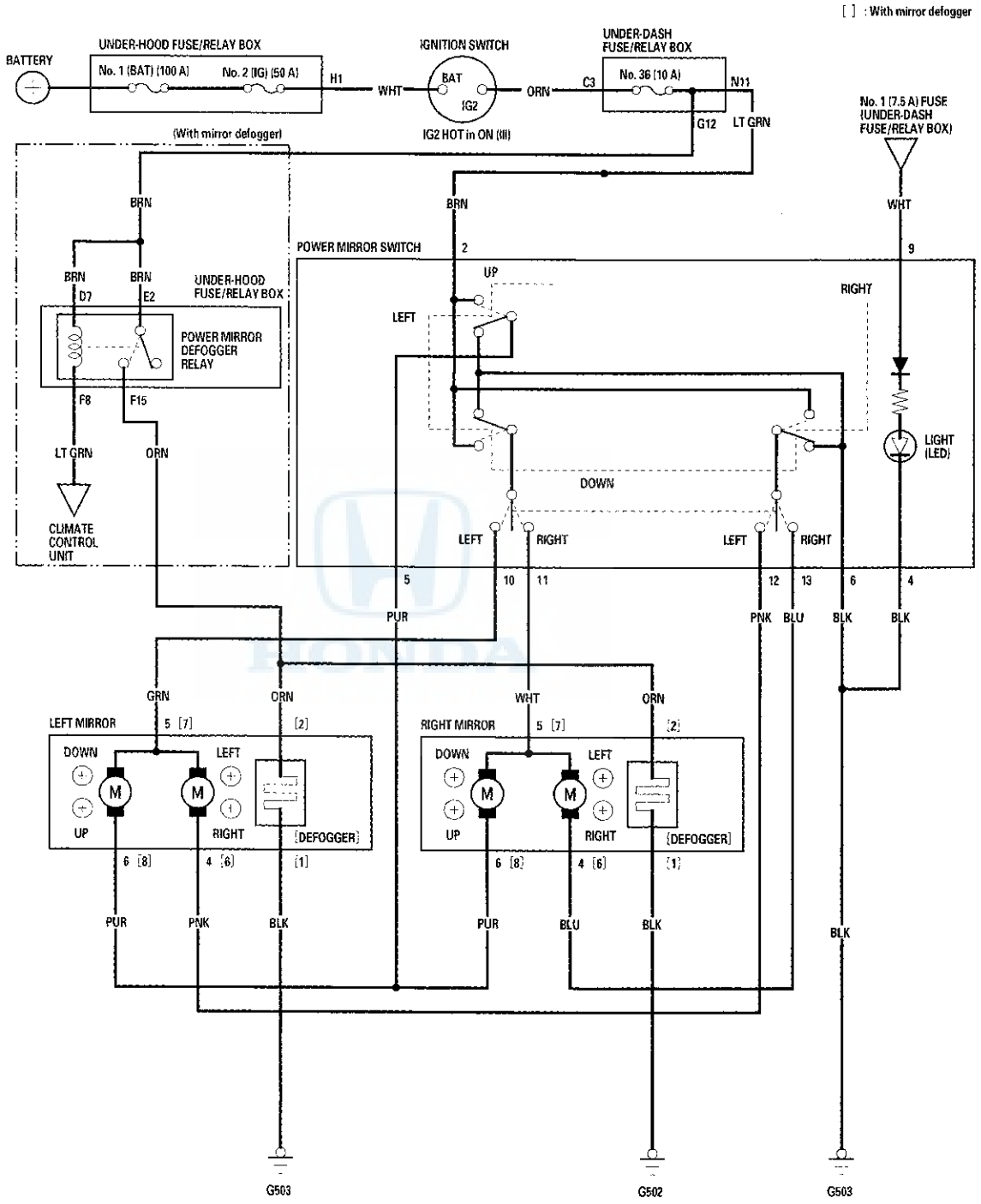

Function Test

1. Remove the power window master switch (see page 22-201).

2. Disconnect the 13P connector (A) from the power mirror switch (B).

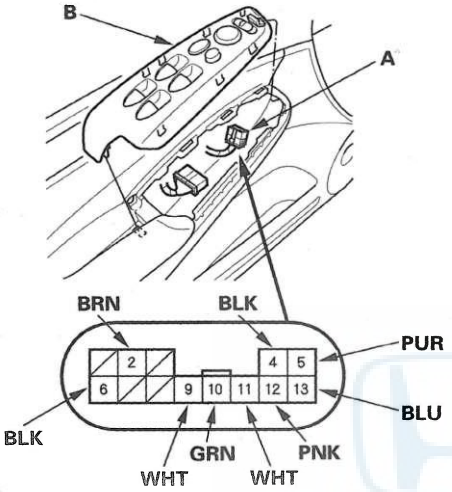

Wire side of female terminals

3. Choose the appropriate test based on the symptom:

   - Both mirrors don't work, go to step 4.
   - Left mirror doesn't work, go to step 6.
   - Right mirror doesn't work, go to step 7.

Both mirrors

4. Measure the voltage between the terminal No. 2 and body ground with the ignition switch turned to ON (II). There should be battery voltage.

   - If there is no battery voltage, check for:
     - Blown No. 36 (10 A) fuse in the under-dash fuse/relay box.
     - An open in the BRN wire.
   - If there is battery voltage, go to step 6.

5. Measure the continuity between the terminal No. 6 and body ground.
   There should be continuity.

   - If there is no continuity, check for:
     - An open in the BLK wire.
     - Poor ground (G 503).
   - If there is continuity, check both mirrors individually.

Left mirror

6. Connect terminals No. 2 and No. 10, and terminals No. 5 (or No. 12) and No. 6 with jumper wires.
   The left mirror should tilt down (or swing left) with the ignition switch to ON (II).

   - If the left mirror does not tilt down (or does not swing left), check for an open in the PUR (or PNK) wire between the left mirror and the 13P connector.
     If the wire is OK, check the left mirror actuator.
   - If the mirror neither tilts down nor swings left, repair the GRN wire.
   - If the mirror works properly, check the mirror switch.

Right mirror

7. Connect terminals No. 2 and No. 11, and terminals No. 5 (or No. 13) and No. 6 with jumper wires. The right mirror should tilt down (or swing left) with the ignition switch to ON (II).

   - If the mirror does not tilt down (or does not swing left), check for an open in the PUR (or BLU) wire between the right mirror and the 13P connector.
     If the wire is OK, check the right mirror actuator.
   - If the mirror neither tilts down nor swings left, repair the WHT wire.
   - If the mirror works properly, check the mirror switch.

Defogger (With mirror defogger)

8. Connect the power mirror defogger relay terminals No. 1 and No. 2 in the under-hood fuse/relay box with a jumper wire, and measure the voltage between terminal No. 1 of the mirror connectors and body ground. There should be battery voltage and both mirrors should warm up with the ignition switch to ON (II).
   - If there is no voltage or neither warms up, check for:
     - An open in the ORN wire.
     - Blown No. 36 (10 A) fuse in the under-dash fuse/relay box.
   - If only one fails to warm up, check:
     - Its defogger.
     - Poor ground (G 503).
   - If both warm up, check the defogger switch.

Power Mirror Switch Test/ Replacement

1. Remove the driver's door grip cover (see page 20-7).

2. Disconnect the 13P connector from the power mirror switch (A), then remove the two screws and power mirror switch.

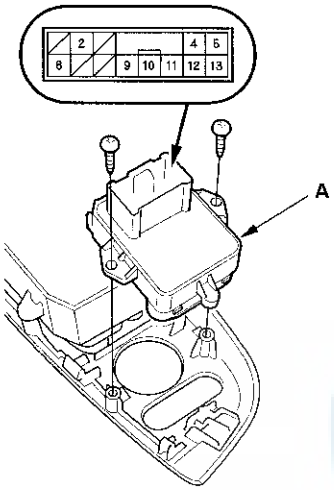

3. Check for continuity between the terminals in each switch position according to the table.

Mirror Switch

Position		Terminal 2	5	6	10	11	12	13
L	UP	○	○					
	DOWN	○		○	○			
	LEFT	○			○		○	
	RIGHT	○		○	○		○	
R	UP	○	○					
	DOWN	○		○		○		
	LEFT	○		○		○		○
	RIGHT	○		○		○		○

4. If the continuity is not as specified, replace the switch.

5. Install the power mirror switch in the reverse order of removal.

Power Mirror Actuator Test

1. Remove the door panel (see page 20-7).

2. Disconnect the 6P [or 8P] connector (A) from the power mirror actuator (B).
   [ ] : With mirror defogger

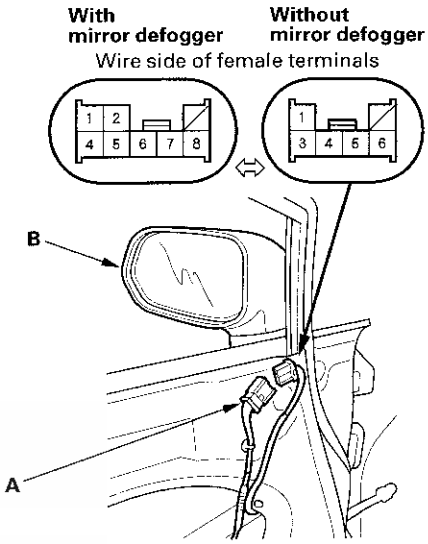

3. Check actuator operation by connecting power and ground according to the table.

Position	Terminal 6 [8]	5 [7]	4 [6]
TILT UP	⊕	⊖	
TILT DOWN	⊖	⊕	
SWING LEFT		⊕	⊖
SWING RIGHT		⊖	⊕

[ ] : With mirror defogger

4. If the mirror fails to work properly, replace the mirror actuator.

Defogger Test (With mirror defogger)

5. Check for continuity between terminals No. 1 and No. 2 of the 8P connector. There should be continuity.

6. If the continuity is not as specified, check for:

   - An open in the wire.
   - A faulty mirror holder.

Power Mirror Actuator Replacement

1. Remove the mirror holder (see page 20-34).

2. Remove the power mirror (see page 20-33).

3. Disconnect the 6P*1 or 8P*2 connector from the mirror.
   * 1: Without mirror defogger
   * 2: With mirror defogger

4. With power mirror defogger:
   Disassemble the power mirror 8P connector (A), and remove terminals No. 1 and No. 2 from it.

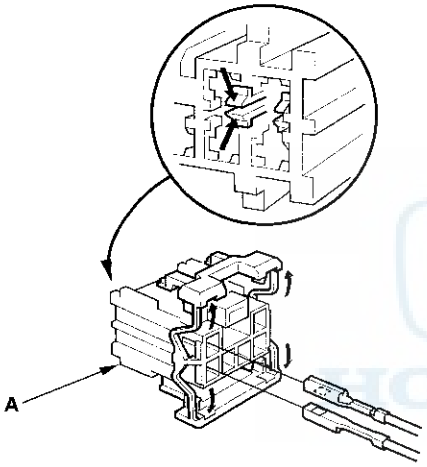

5. Remove the screw from the gasket (A).

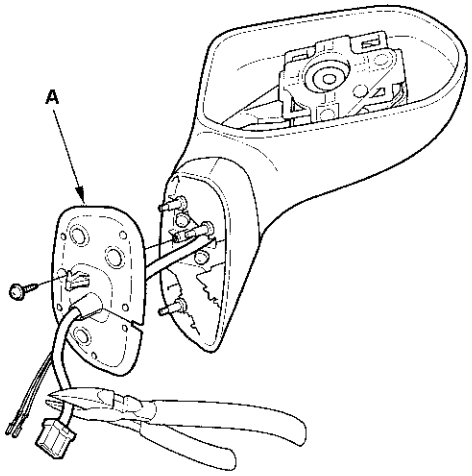

6. Record the terminal locations and wire colors.

7. Cut the wire harness with wire cutters, and remove the gasket.

8. Remove the three screws (A), and separate the mirror housing (B) from the bracket (C).

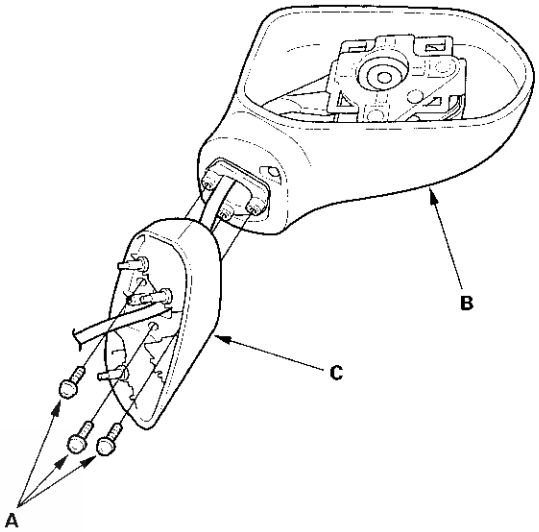

4.9 N·m (0.5 kgf·m, 3.6 lbf·ft)

9. Remove the six screws, and the actuator (A).

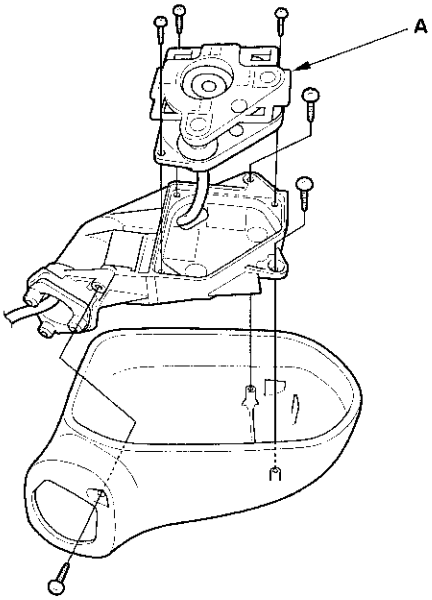

10. Route the wire harness (A) of the new actuator through the hole in the bracket (B) and gasket (C).

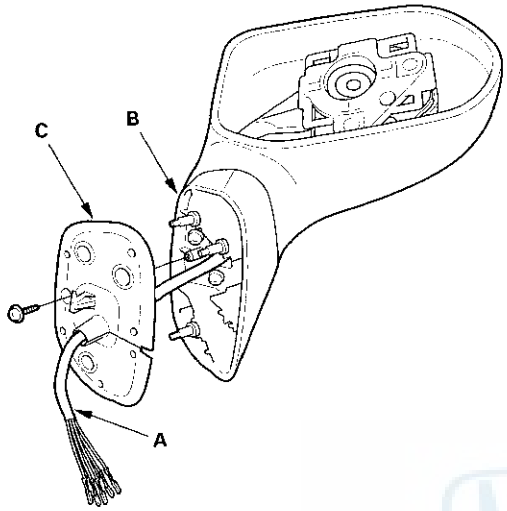

11. Install the actuator, bracket, harness clip, and gasket in the reverse order of removal.

12. Insert the new actuator terminals into the connector in the original arrangement.

Without mirror defogger

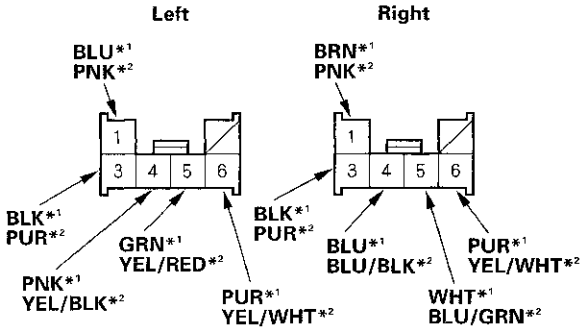

Wire side of female terminals

*1: '06-08 models
*2: '09 model

With mirror defogger

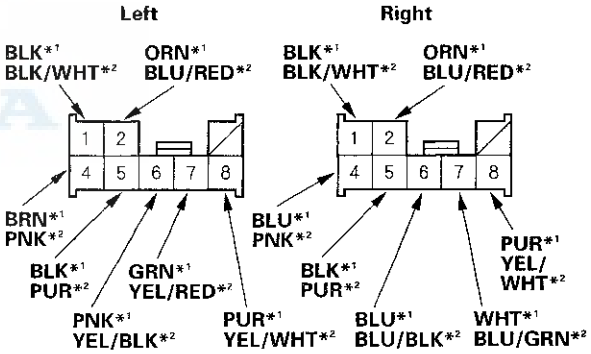

Wire side of female terminals

*1: '06-08 models
*2: '09 model

13. Apply tape to seal the intersection of the wire harness and the gasket.

14. Reassemble in the reverse order of disassembly. Be careful not to break the mirror when reinstalling it to the actuator.

15. Reinstall the mirror assembly on the door.

16. Operate the power mirror to ensure smooth operation.

Rear Window Defogger

Component Location Index

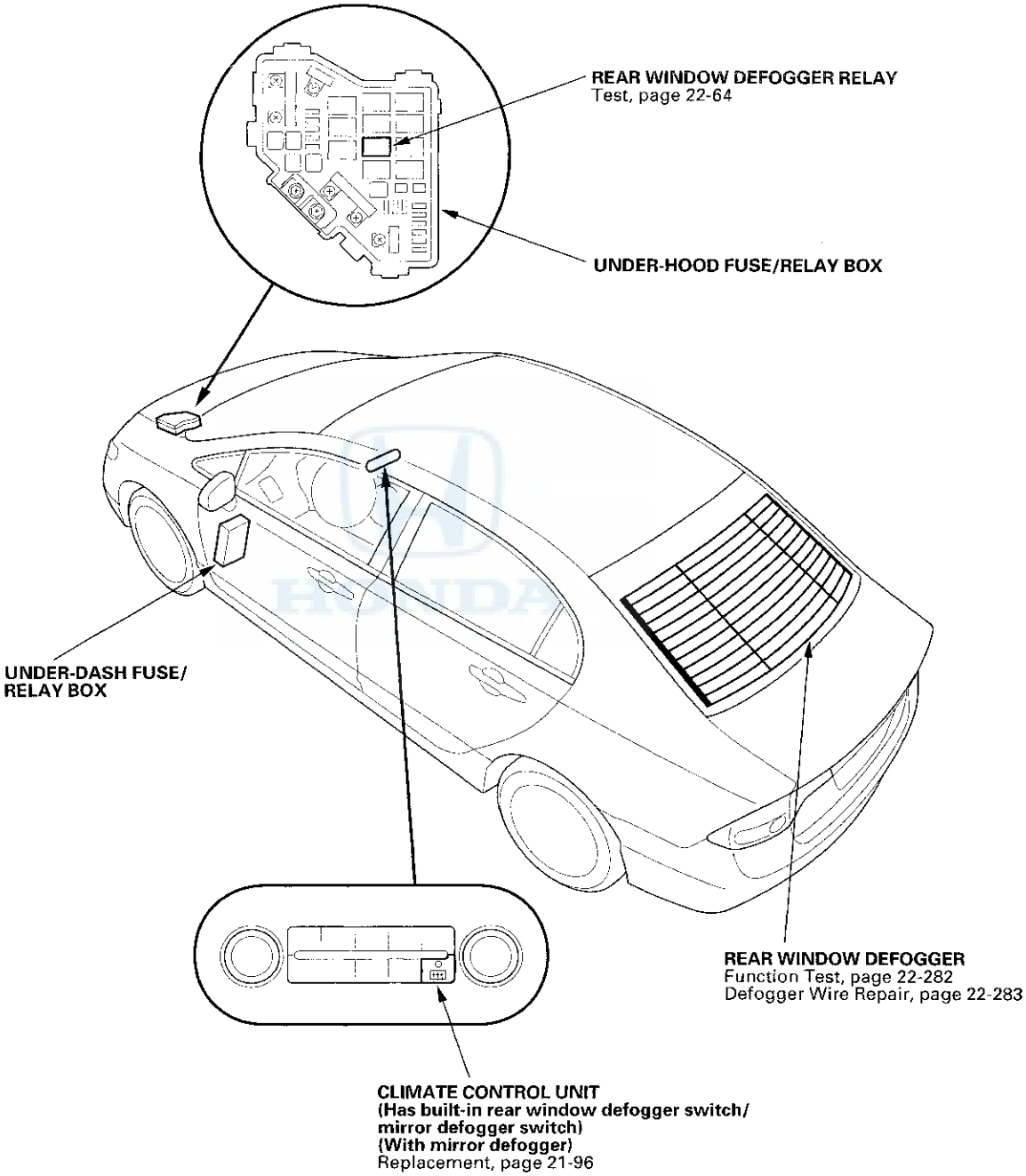

Circuit Diagram

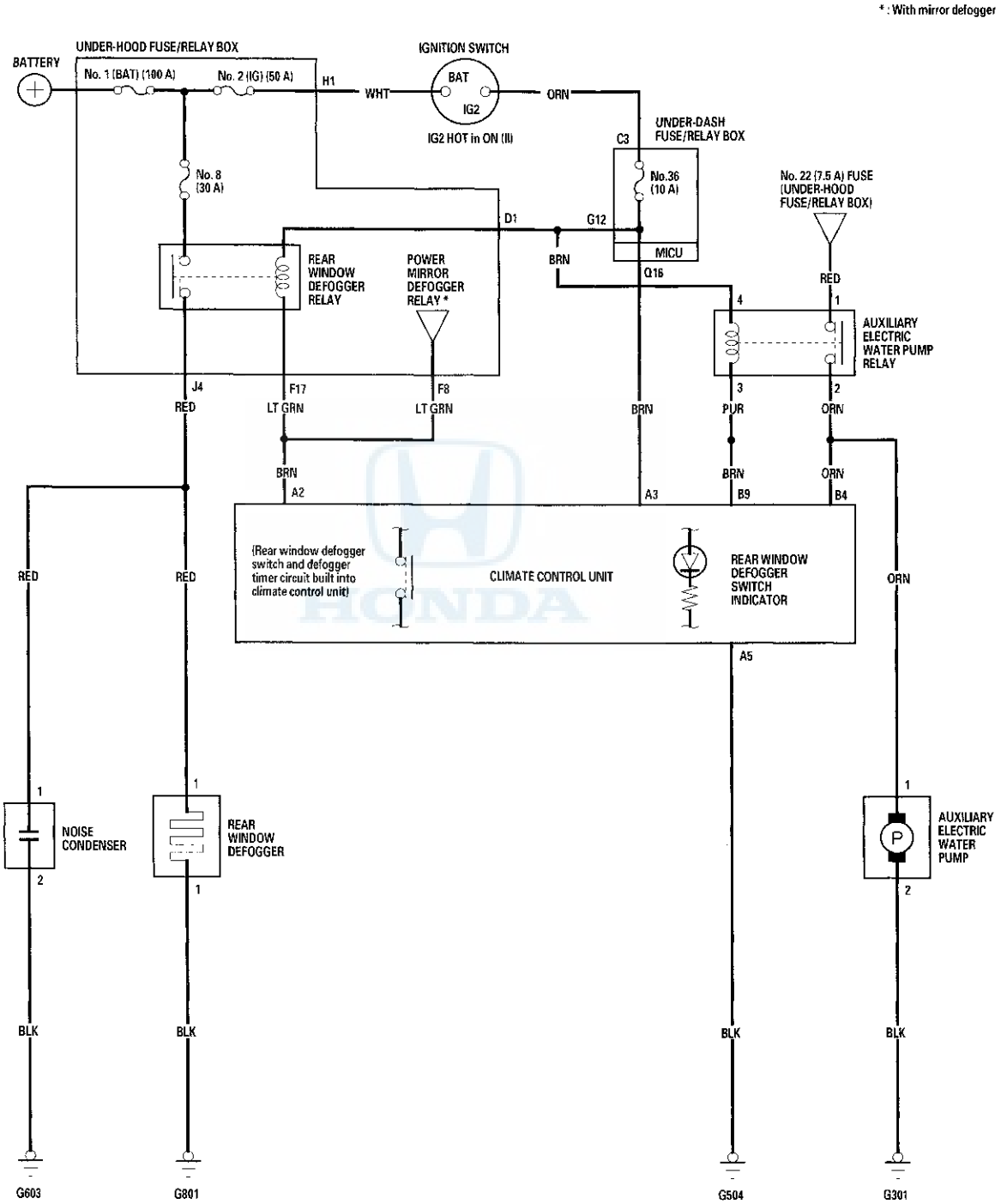

Function Test

NOTE:
- Be careful not to scratch or damage the defogger wires with the tester probe.
- Before testing, check the No. 8 (30 A) fuse in the under-hood fuse/relay box and the No. 36 (10 A) fuse in the under-dash fuse/relay box.

1. Measure the voltage between the positive terminal (A) and body ground with the ignition switch turned to ON (II) and the defogger switch ON.
   There should be battery voltage.

   - If there is no voltage, check for:
     - Faulty rear window defogger relay.
     - Faulty climate control unit.
     - An open in the RED wire to the positive terminal.
   - If there is voltage, go to step 2.

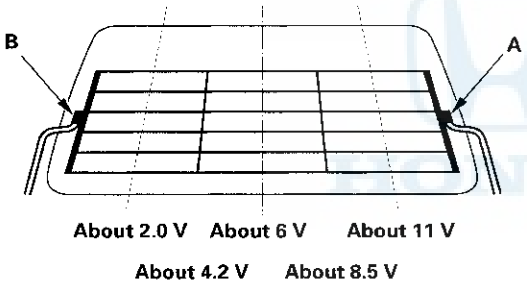

2. Disconnect the negative terminal (B) from the rear window defogger.

3. Check for continuity between the negative terminal and body ground.

   If there is no continuity, check for an open in the wire or poor ground (G801). If there is continuity, go to step 4.

4. Reconnect the negative terminal to the rear window defogger.

5. Turn the ignition switch to ON (II) and the rear window defogger switch ON.

6. Touch the voltmeter positive probe to each point on each defogger wire, and the negative probe to the negative terminal.

   - If the voltage is as specified, the defogger wire up to that point is OK.
   - If the voltage is not as specified, repair the defogger wire.
     - If it is more than specified at one of the points, there is a break in the negative half of the wire.
     - If it is less than specified at one of the points, there is a break in the positive half of the wire.

Defogger Wire Repair

NOTE: To make an effective repair, the broken section must be no longer than 1 in. (25 mm).

1. Lightly rub the area around the broken section (A) with fine steel wool, then clean it with isopropyl alcohol.

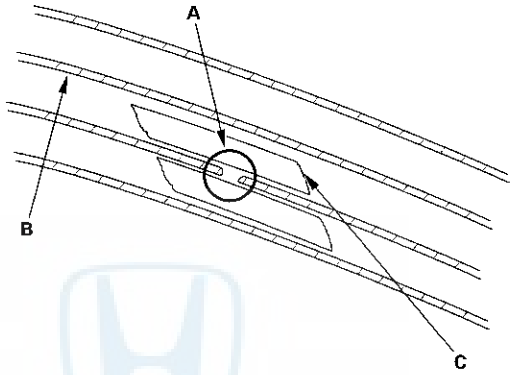

2. Carefully mask above and below the broken portion of the defogger wire (B) with cellophane tape (C).

3. Using a small brush, apply a heavy coat of silver conductive paint (commercially available) (A) extending about 1/8 in. (3.1 mm)'' on both sides of the break. Allow 25 minutes to dry.

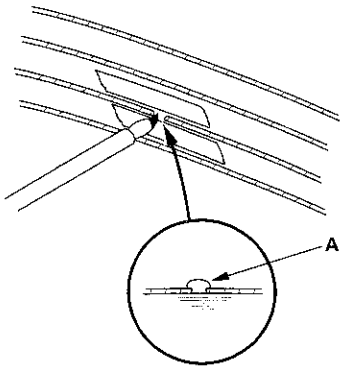

4. Do the function test to confirm that the wire is repaired (see page 22-282).

5. Apply a second coat of paint in the same way. Let it dry 3 hours before removing the tape.

Immobilizer System

Component Location Index

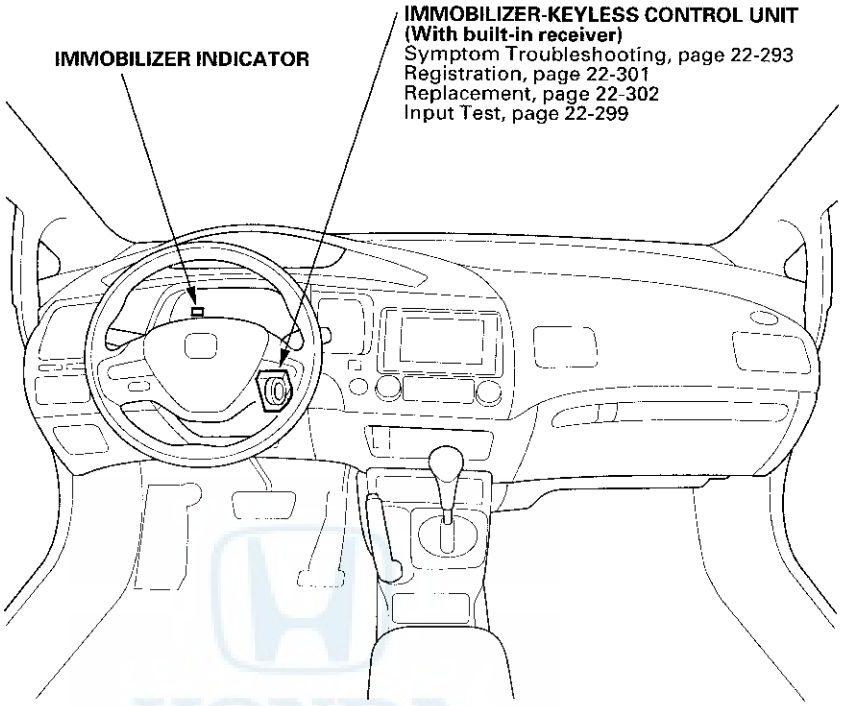

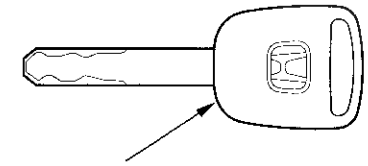

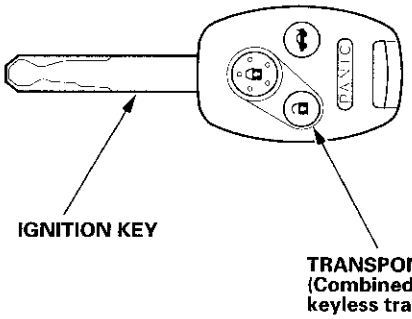

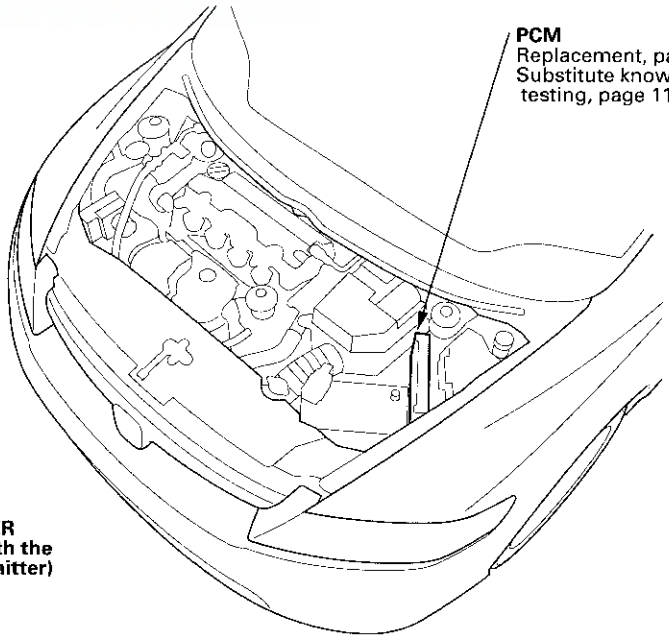

System Description

The vehicle is equipped with a type VI immobilizer system that will disable the vehicle unless a programmed ignition key is used.
This system consists of a transponder combined with a keyless transmitter, an immobilizer-keyless control unit, the MICU (has built-in imoes unit), an immobilizer indicator, and the PCM.
When the immobilizer key (programmed by the HDS) is inserted into the ignition switch and turned to ON (II), the immobilizer-keyless control unit sends power to the transponder in the ignition key. The transponder then sends a coded signal back to the immobilizer-keyless control unit which then sends a coded signal to the PCM and the MICU (imoes unit).
The PCM and MICU (imoes unit) identify this coded signal, then fuel power is supplied.

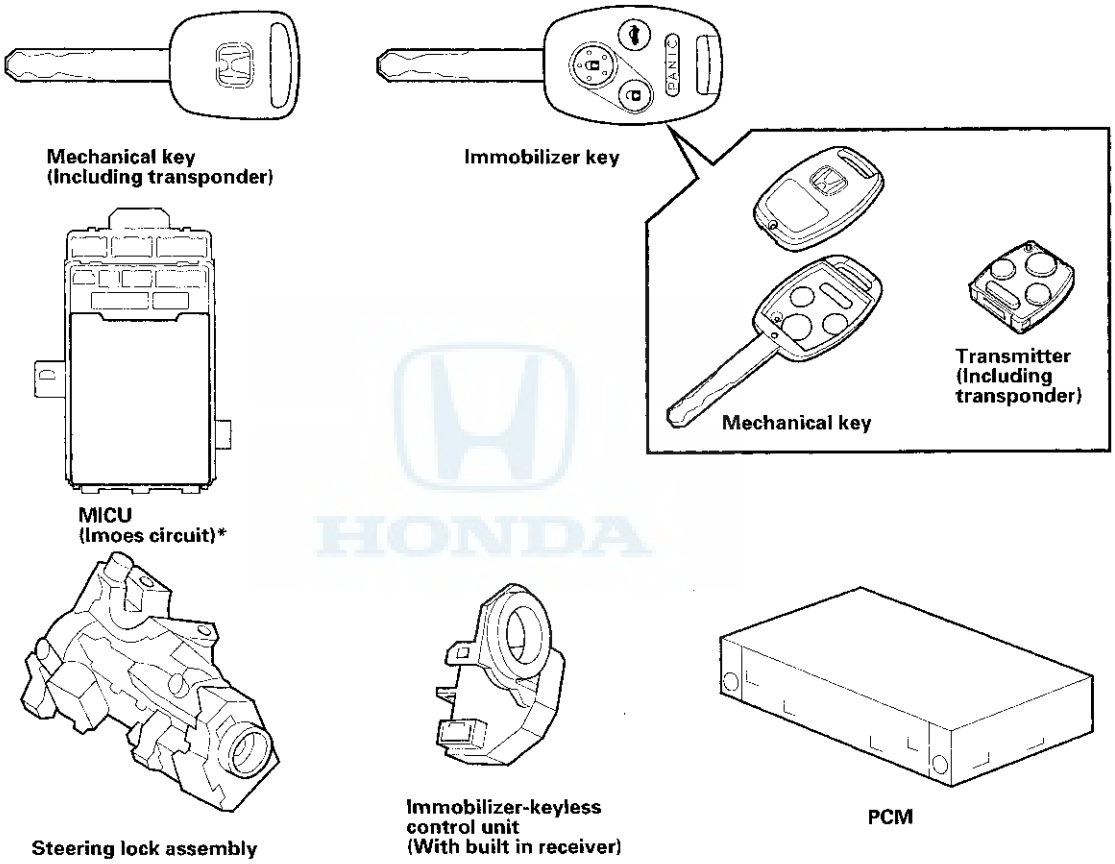

If the wrong key has been used or the code was not received or recognized by the unit, the indicator will come on for about 2 seconds, then it will blink until the ignition switch is turned to LOCK (0). When the ignition switch is turned to LOCK (0), the indicator will blink ten times to signal that the unit has reset correctly, then the indicator will go off.

Circuit Diagram

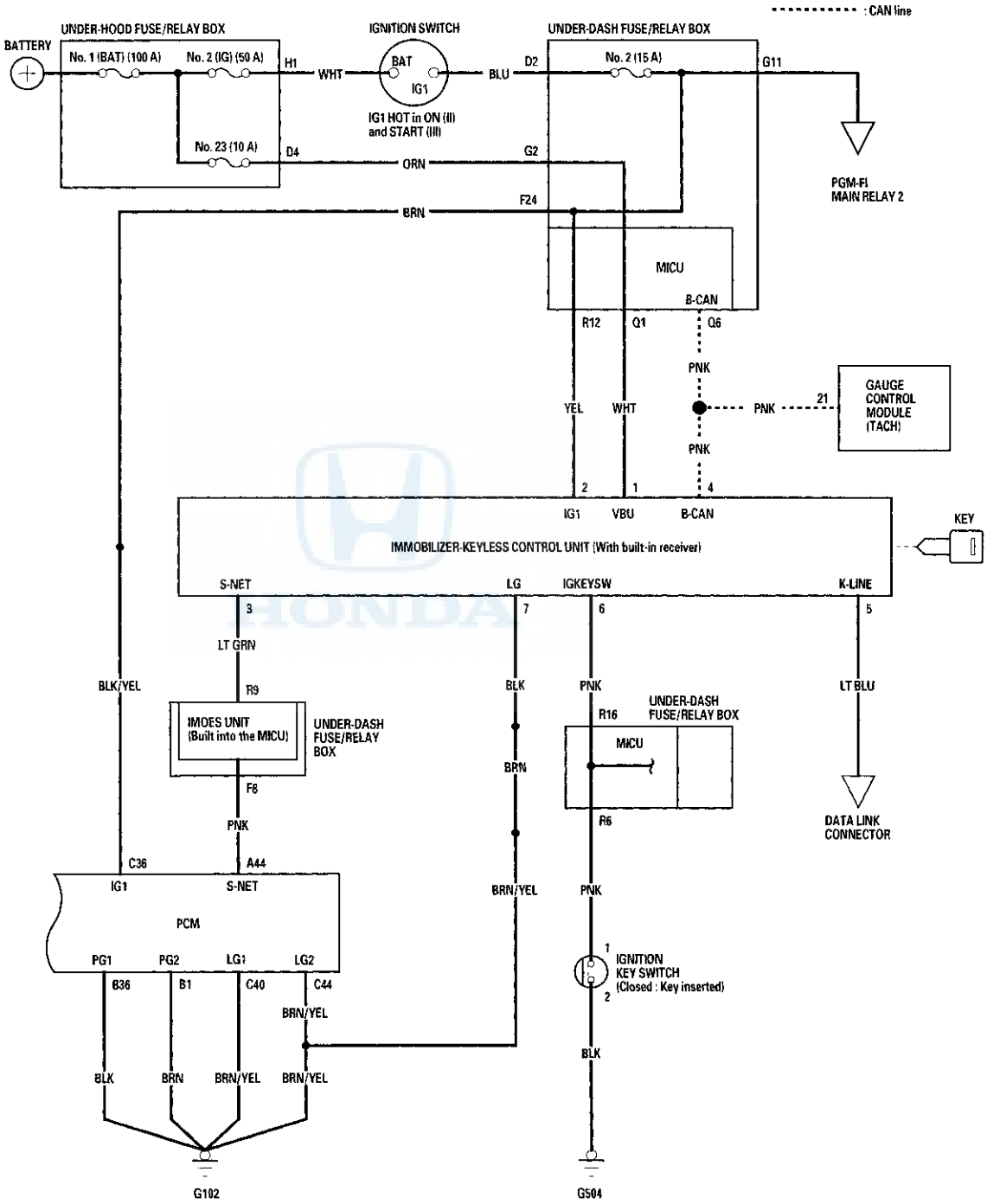

DTC Troubleshooting

DTC B1905: Immobilizer-Keyless Control Unit Lost Communication with MICU (DRLOCKSW Message)

NOTE: If you are troubleshooting multiple DTCs, be sure to follow the instructions in B-CAN System Diagnosis Test Mode A (see page 22-89).

1. Clear the DTCs with the HDS.

2. Turn the ignition switch to LOCK (0), and then back to ON (II).

3. Wait for 6 seconds or more.

4. Check for DTCs witch the HDS.

   Is DTC B1905 indicated?

   YES—Go to step 5.

   NO—Intermittent failure, the system is OK at this time. Check for loose or poor connections at the immobilizer-keyless control unit 7P connector, and under-dash fuse/relay box connector Q (16P). ■

5. Check for DTCs with the HDS.

   Is DTC B1160 also indicated with DTC B1905?

   YES—Faulty MICU; replace the under-dash fuse/relay box (see page 22-60). ■

   NO—Replace the immobilizer-keyless control unit (see page 22-302). ■

DTC Troubleshooting (cont'd)

DTC B1906: Immobilizer-Keyless Control Unit Lost Communication with Gauge Control Module (A/T Message)

NOTE: If you are troubleshooting multiple DTCs, be sure to follow the instructions in B-CAN System Diagnosis Test Mode A (see page 22-89).

1. Clear the DTCs with the HDS.
2. Turn the ignition switch to LOCK (0), and then back to ON (II).
3. Wait for 6 seconds or more.
4. Check for DTCs with the HDS.

   Is DTC B1906 indicated?

   YES—Go to step 5.

   NO—Intermittent failure, the system is OK at this time. Check for loose or poor connections at the gauge control module (tach) 36P connector and at the immobilizer-keyless control unit 7P connector. ■

5. Turn the ignition switch to LOCK (0), and then back to ON (II).
6. Select the BODY ELECTRICAL menu, then enter the UNIT INFORMATION.
7. Check the condition of the gauge control module (tach) from the CONNECTED UNIT list.

   Is NOT AVAILABLE indicated?

   YES—Go to step 8.

   NO—Replace the immobilizer-keyless control unit (see page 22-302). ■

8. Do the gauge control module (tach) input test (see page 22-248).

   Are all inputs OK?

   YES—Go to step 9.

   NO—Repair the faulty input, then recheck the DTCs. ■

9. Disconnect the immobilizer-keyless control unit 7P connector.
10. Disconnect the gauge control module (tach) 36P connector.
11. Check for continuity between immobilizer-keyless control unit 7P connector terminal No. 4 and gauge control module (tach) 36P connector terminal No. 21.

IMMOBILIZER-KEYLESS CONTROL UNIT 7P CONNECTOR
Wire side of female terminals

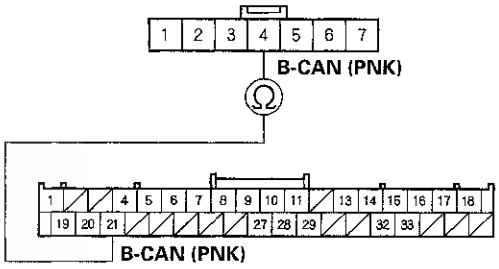

GAUGE CONTROL MODULE (TACH) 36P CONNECTOR
Wire side of female terminals

Is there continuity?

YES—Replace the gauge control module (tach) (see page 22-255). ■

NO—Repair an open in the wire between the immobilizer-keyless control unit and the gauge control module (tach). ■

DTC B1925: Ignition Key Switch Signal Input Error

NOTE: If you are troubleshooting multiple DTCs, be sure to follow the instructions in B-CAN System Diagnosis Test Mode A (see page 22-89).

1. Clear the DTCs with the HDS.
2. Turn the ignition switch to LOCK (0) and remove the ignition key.
3. Insert the ignition key into the ignition switch, and turn the ignition switch to ON (II).
4. Check for DTCs with the HDS.

   Is DTC B1925 indicated?

   YES—Go to step 5.

   NO—Intermittent failure, the system is OK at this time. Check for loose or poor connections at the immobilizer-keyless control unit 7P connector, under-dash fuse/relay box connector R (20P), and at the ignition key switch 6P connector.■
5. Turn the ignition switch to LOCK (0) and remove the ignition key.
6. Disconnect the ignition key switch 6P connector.
7. At the ignition key switch side, check for continuity between ignition key switch 6P connector terminals No. 1 and No. 2.

IGNITION KEY SWITCH 6P CONNECTOR

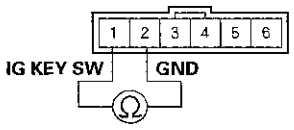

Terminal side of male terminals

Is there continuity?

YES—Faulty ignition key switch or short to ground, replace the steering lock assembly (see page 17-15).

NO—Go to step 8.

8. Insert the ignition key into the ignition switch.
9. At the ignition key switch side, check for continuity between ignition key switch 6P connector terminals No. 1 and No. 2.

IGNITION KEY SWITCH 6P CONNECTOR

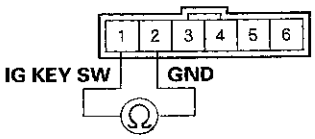

Terminal side of male terminals

Is there continuity?

YES—Go to step 10.

NO—Faulty ignition key switch, replace the steering lock assembly (see page 17-15).

10. Disconnect the immobilizer-keyless control unit 7P connector.
11. Check for continuity between immobilizer-keyless control unit 7P connector terminal No. 6 and ignition key switch 6P connector terminal No. 1.

IGNITION KEY SWITCH 6P CONNECTOR
Wire side of female terminals

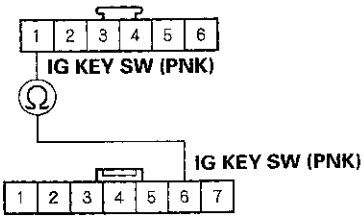

IMMOBILIZER-KEYLESS CONTROL UNIT 7P CONNECTOR
Wire side of female terminals

Is there continuity?

YES—Go to step 12.

NO—Repair an open in the wire.■

(cont'd)

DTC Troubleshooting (cont'd)

12. Check for continuity between immobilizer-keyless control unit 7P connector terminal No. 6 and body ground.

IMMOBILIZER-KEYLESS CONTROL UNIT 7P CONNECTOR

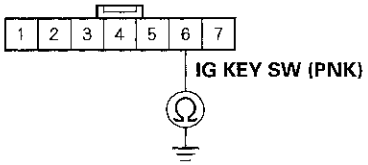

Wire side of female terminals

Is there continuity?

YES—Repair a short to ground in the wire or substitute a known-good under-dash fuse/relay box, and recheck. If the symptom/indication goes away, replace under-dash fuse/relay box. ■

NO—Replace the immobilizer-keyless control unit (see page 22-302). ■

Symptom Troubleshooting Information

Symptom Troubleshooting by the Immobilizer Indicator Lighting Pattern

Immobilizer system condition can be checked by the immobilizer indicator lighting pattern.

Normal operation
If the immobilizer code is identified, the immobilizer indicator comes on for 2 seconds, then goes off after turning the ignition switch to ON (II).
The immobilizer indicator does not come on when the ignition switch is turned to LOCK (0).

Immobilizer code is not identified
If the immobilizer code is not identified, the immobilizer indicator comes on for 2 seconds, then blinks after turning the ignition switch to ON (II).
The immobilizer indicator blinks ten times, then goes off when the ignition switch is turned to LOCK (0).

Immobilizer indicator does not come on
If the immobilizer indicator does not come on after turning the ignition switch to ON (II), there may be an open or short in the F-CAN lines between the PCM and the gauge control module (tach). Watch the malfunction indicator lamp (MIL). If the MIL stays on, go to the PGM-FI system troubleshooting (see page 11-212).

Immobilizer indicator does not go off
If the immobilizer indicator does not go off after turning the ignition switch to ON (II), do the gauge control module (tach) self-diagnostic function (see page 22-223). If the indicator drive circuit is OK, do the SYSTEM CHECK with the HDS.

General Check before Troubleshooting

Before troubleshooting the immobilizer system, check the following general points and solve any if applicable.

- Battery is low; charge the battery fully, then troubleshoot the immobilizer system.
- Ignition key is not a genuine Honda part; use the Honda-approved key blank, register the key, then troubleshoot the immobilizer system.
- Key ring, or keys, or a key case is used; remove the key from it, and troubleshoot the immobilizer system with a key only.
- Aftermarket electrical part is attached; remove it, then troubleshoot the immobilizer system.

(cont'd)

Symptom Troubleshooting Information (cont'd)

How to Troubleshoot

NOTE: If the HDS does not communicate with the vehicle, troubleshoot the DLC circuit troubleshooting (see page 11-213).

1. Do the PGM-FI system DTCs check. If there are any DTCs, troubleshoot the indicated DTC.
2. Do the Body Electrical DTCs check. If there are any DTCs, troubleshoot the indicated DTC.
3. Do the system check using the HDS. If there is a system check number, do the troubleshooting for the item indicated (see page 22-296).
4. Check the status log using the HDS. Troubleshoot the line with the highest counts (see page 22-298). If all the lines are "0" zero, the problem may not be caused by the immobilizer system, check for ignition or fuel problems.

   NOTE: Once repaired, clear the status log by removing the back up power fuse, or disconnecting the battery.

Symptom Troubleshooting of an open Power Supply and Ground Circuit

If a malfunction occurs in the immobilizer circuit for the VBU, IG1 and GND (LG) lines, identify the lines to check with this table.

Line Error / Symptom		Immobilizer Indicator	Engine Start	Key Registration	Tester Communication	Keyless Operation
Terminal No.	Cause of Malfunction					
1	VBU line open or short	Comes on, then goes off.	Possible	Possible	Possible	Impossible
2	IG1 line open or short	Blinking	Impossible	Impossible	Impossible	Possible
3	S-NET line open or short	Blinking	Impossible	Possible	Impossible	Possible
4	B-CAN line open or short	Comes on, then goes off.	Possible	Possible	Immobilizer: Possible Keyless: Impossible	Impossible
5	K-LINE line open or short	Comes on, then goes off.	Possible	Impossible	Impossible	Possible
6	KEYSW line open	Comes on, then goes off.	Possible	Possible	Possible	Possible (in spite of the key is in the ignition switch)
	KEYSW line short to ground					Impossible
7	GND (LG) line open	Blinking	Impossible	Impossible	Impossible	Impossible

Symptom Troubleshooting

1. Troubleshoot the immobilizer system by the order of the priority shown:

Order of Priority	Symptom	Possible cause
1	Immobilizer indicator blinks.	Symptom troubleshooting (see page 22-294).
2	Engine does not start with the immobilizer key.	Symptom troubleshooting (see page 22-295).
3	Immobilizer indicator does not come on.	Check the MIL indication. • If the MIL comes on, go to the PGM-FI system MIL circuit troubleshooting (see page 11-212). • If the MIL does not come on, go to the gauge control module self-diagnostic function (see page 22-223).
4	Immobilizer indicator does not go off.	Symptom troubleshooting (see page 22-295).

HONDA

Symptom Troubleshooting (cont'd)

Immobilizer indicator blinks

NOTE: Before troubleshooting, check the items listed in "General Check before Troubleshooting".

1. Turn the ignition switch to LOCK (0).
2. Connect the HDS, then turn the ignition switch to ON (II).
3. Enter the IMMOBILIZER, then select the IMMOBILIZER SETUP.
4. Select the SYSTEM CHECK.

   Is the SYSTEM CHECK indicated?

   YES—Troubleshoot the immobilizer system according to the result of the SYSTEM CHECK (see page 22-296).■

   NO—Go to step 5.
5. Turn the ignition switch to LOCK (0).
6. Enter the vehicle, and remove the ignition key from the ignition switch, then close the all doors.
7. Operate the keyless transmitter LOCK and UNLOCK several times in the vehicle.

   Do the door lock actuators work normally?

   YES—Go to step 8.

   NO—Check for a poor ground (G102) and/or an open in the wire between immobilizer-keyless control unit 7P connector terminal No. 7 and body ground (G102).■
8. Turn the ignition switch to ON (II).
9. Measure the voltage between immobilizer-keyless control unit 7P connector terminal No. 2 and body ground.

IMMOBILIZER-KEYLESS CONTROL UNIT 7P CONNECTOR

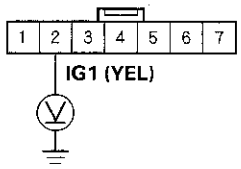

Wire side of female terminals

Is there battery voltage?

YES—Go to step 10.

NO—Repair open in the YEL wire between the under-dash fuse/relay box and the immobilizer-keyless control unit.■

10. Measure the voltage between immobilizer-keyless control unit 7P connector terminal No. 7 and body ground.

IMMOBILIZER-KEYLESS CONTROL UNIT 7P CONNECTOR

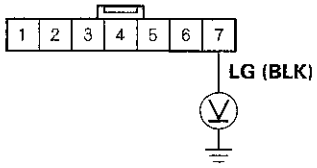

Wire side of female terminals

Is there 0.5 V or more?

YES—Repair poor connection or open between immobilizer-keyless control unit 7P connector terminal No. 7 and G102.■

NO—Replace the immobilizer-keyless control unit (see page 22-302).■

Engine does not start with the immobilizer key

NOTE: Before troubleshooting, check the items listed in "General Check before Troubleshooting" and "How to Troubleshoot" (see page 22-291).

1. Try to start the engine.

   Does the engine start?

   YES—Intermittent failure, the system is OK at this time. Check status log (see page 22-298). ■

   NO—Go to step 2.

2. Turn the ignition switch to LOCK (0).

3. Turn the ignition switch to ON (II), and check the immobilizer indicator.

   Does the indicator come on for 2 seconds, then go off?

   YES—Go to step 4.

   NO—Go to the immobilizer indicator blinks troubleshooting (see page 22-294). ■

4. Turn the ignition switch to START (III).

   Does the starter motor run?

   YES—Go to step 5.

   NO—Go to Starting System and check the starter motor. ■

5. Try to start the engine with the immobilizer key.

   Does the engine start?

   YES—Go to step 6.

   NO—Go to the PGM-FI System Symptom Troubleshooting. ■

6. Wait for a few minutes with the engine running.

   Does the engine stop?

   YES—Go to the PGM-FI System Symptom Troubleshooting. ■

   NO—The system is OK at this time. ■

Immobilizer indicator does not go off

1. Turn the ignition switch to LOCK (0).

2. Connect the HDS to the data link connector.

3. Turn the ignition switch to ON (II).

4. Enter IMMOBILIZER, then select the IMMOBILIZER INFORMATION.

5. Do the SYSTEM CHECK with the HDS.

   Is N-1 OK indicated?

   YES—Replace the gauge control module (see page 22-255). ■

   NO—Substitute a known-good immobilizer-keyless control unit, then register it and recheck. If the symptom goes away, replace the original immobilizer-keyless control unit (see page 22-302). ■

System Check

1. Connect the HDS to the data link connector.
2. Turn the ignition switch to ON (II).
3. Monitor the System Check in the Immobilizer Info with the HDS.
4. If the HDS displays "Normal", the immobilizer system is OK. If the HDS displays any other messages, check as follows:

System Check No.	System Check	Possible Cause
A-1	The key is not registered	• This key is not registered in the immobilizer-keyless control unit. Try to register keys using the HDS. • No communication between the antenna and the immobilizer key because of interference from metal such as key chains/key rings/ other keys. • Low battery voltage.
A-2	Communication error between the key and immobilizer unit	• Intermittent interruption between transponder and immobilizer-keyless control unit. • The immobilizer key type is incorrect non-Honda key. • Key failure (transponder failure) • No communication between the antenna and the immobilizer key because of interference from metal such as key chains/key rings/ other keys. • Low battery voltage.
A-3	No communication between the key and immobilizer unit	• The ignition switch was turned to ON (II) with a non-immobilizer key. • The immobilizer key type is incorrect non-Honda key. • Key failure (transponder failure) • No communication between the antenna and the immobilizer key because of interference from metal such as key chains/key rings/ other keys. • Low battery voltage. • Immobilizer-keyless control unit failure.
B-1	The PCM is not registered	• The PCM was not registered. Try to register the PCM using the HDS. • No communication between the PCM and the immobilizer-keyless control unit because of low battery voltage. • No communication between the immobilizer-keyless control unit and the PCM because of interference. • Open in the IG1 line.
B-2	Error of communication format in PCM	• The PCM was not registered. Try to register the PCM using the HDS. • No communication between the PCM and the immobilizer-keyless control unit because of low battery voltage. • No communication between the immobilizer-keyless control unit and the PCM because of interference.

System Check No.	System Check	Possible Cause
C-1	The imoes unit is not registered	• Imoes unit was not registered. • No communication between the imoes unit and the immobilizer-keyless control unit because of low battery voltage. • No communication between the imoes unit and the immobilizer-keyless control unit because of interference.
C-2	Error of communication format in imoes unit	• Imoes unit was not registered. • No communication between the imoes unit and the immobilizer-keyless control unit because of low battery voltage. • No communication between the imoes unit and the immobilizer-keyless control unit because of interference.
D-1	S-net line short	• Harness short from the PCM to the immobilizer-keyless control unit. (S-net line short) • No communication between the PCM and the immobilizer-keyless control unit because of low battery voltage. • No communication between the immobilizer-keyless unit and the PCM because of interference. • Immobilizer-keyless control unit failure. • PCM failure.
D-2	No communication between imoes unit and immobilizer unit	• Blown fuse • Harness open from the imoes unit to the immobilizer-keyless control unit. (S-net line short) • No communication between the imoes unit and the immobilizer-keyless control unit because of low battery voltage. • No communication between the imoes unit and the immobilizer-keyless control unit because of interference. • Immobilizer-keyless control unit failure. • Imoes unit failure.
D-3	No communication between PCM and immobilizer unit	• Blown fuse • Harness open from the PCM to the immobilizer-keyless control unit. • No communication between the PCM and the immobilizer-keyless control unit because of low battery voltage. • No communication between the immobilizer-keyless control unit and the PCM because of interference. • Immobilizer-keyless control unit failure. • PCM failure.
E-1	Initial registration of immobilizer unit is not completed	The immobilizer-keyless control unit is not registered. Try to register the immobilizer-keyless control unit using the HDS.
E-2		
E-3		
E-4		
E-5		
F-1	Special Mode	Turn the ignition switch to ON (II) and to LOCK (0) with the registered key.
F-2		
F-3		
F-4		
F-5		

Status Log

If you suspect there is a immobilizer system problem, check the status log.

1. Connect the HDS to the data link connector.
2. Turn the ignition switch to ON (II).
3. On the HDS screen, select Honda systems, select immobilizer set-up, select immobilizer information, then select status log.
4. Check the status log count. Troubleshoot the status with the highest count first. If no counts are listed, the immobilizer system is OK. Continue with normal symptom troubleshooting.

Status Log No.	Detected Item	Probable Cause
A-1	KEY CODE MISMATCH (Code format normal, but code data is mismatch)	• The key was not registered • Interference from metal such as key chains • Low battery voltage
A-2	KEY CODE MISMATCH (Code format failure)	• Ignition switch was turned to ON (II) with another type of immobilizer key or aftermarket key • Interference from metal such as key chains • Low battery voltage
A-3	KEY CODE MISMATCH (No key code or non-immobilizer key)	• Ignition switch was turned to ON (II) with another type of immobilizer key or aftermarket key • Interference from metal such as key chains • Low battery voltage • Key failure • Immobilizer-keyless control unit failure
B-1	PCM CODE MISMATCH (Code format normal, but code data is mismatch)	• PCM was not registered correctly • Low battery voltage • Poor or loose terminal connections at the immobilizer-keyless control unit • Communication line electrical noise
B-2	PCM MISMATCH (Code format failure)	• PCM was not registered correctly • Low battery voltage • Poor or loose terminal connections at the immobilizer-keyless control unit • Communication line electrical noise
C-1	IMOES UNIT mismatch (Code format normal, but data is mismatch)	• Imoes unit was not registered • The communication was not good between imoes unit and immobilizer unit by battery voltage low • The communication was not good between imoes unit and immobilizer unit by influence of some noise
C-2	IMOES UNIT mismatch (Code format failure)	• Imoes unit was not registered correctly • The communication was not good between imoes unit and immobilizer unit by battery voltage low • The communication was not good between imoes unit and immobilizer unit by influence of some noise
D-1	SECURITY-NET LINE PROBLEM IMOCD (S-NET) (Short to ground)	• Low battery voltage • Poor or loose terminal connections at the immobilizer-keyless control unit and the PCM • Communication line electrical noise
D-2	SECURITY-NET LINE PROBLEM (No communication)	• Blown fuse • Harness open from imoes unit to immobilizer unit • The communication was not good between imoes unit and immobilizer unit by battery voltage low • The communication was not good between imoes unit and immobilizer unit by influence of some noise • imoes unit failure • Immobilizer unit failure
D-3	SECURITY-NET LINE PROBLEM IMOCD (S-NET) (Open line or ECM/PCM failure)	• Open or short in the harness from the PCM to the immobilizer-keyless control unit • Low battery voltage • Poor or loose terminal connections at the immobilizer-keyless control unit and the PCM • Communication line electrical noise

Immobilizer-keyless Control Unit Input Test

NOTE: Before testing the immobilizer system, troubleshoot the system using B-CAN System Diagnosis Test Mode A (see page 22-89), and check the No. 10 (7.5 A) and No. 38 (30 A) fuses in the under-dash fuse/relay box.

1. Remove the drivers dashboard lower cover (see page 20-89).
2. Remove the steering column covers (see page 17-10).
3. Disconnect the 7P connector (A) from the immobilizer-keyless control unit (B).

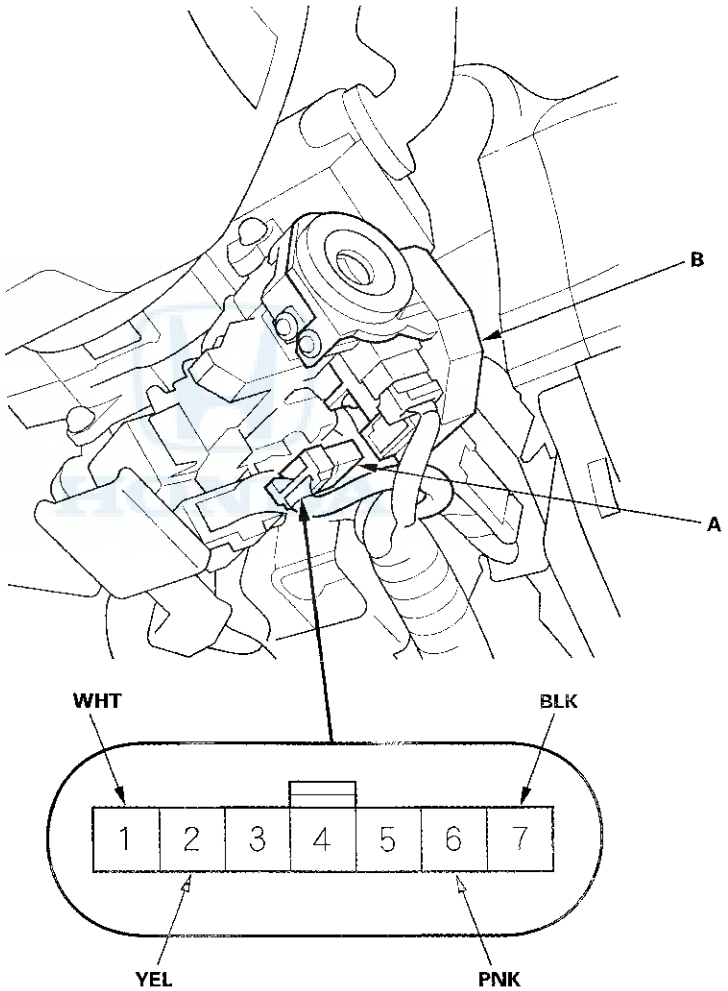

Wire side of female terminals

4. Inspect the connector and socket terminals to be sure they are all making good contact.
   - If the terminals are bent, loose or corroded, repair them as necessary, and recheck the system.
   - If the terminals look OK, go to step 5.

(cont'd)

Immobilizer-keyless Control Unit Input Test (cont'd)

5. With the connector still disconnected, do these input tests at the following connector.

   - If any test indicates a problem, find and correct the cause, then recheck the system.
   - If all the input tests prove OK, go to step 6.

Cavity	Wire (Signal)	Test condition	Test: Desired result	Possible cause if desired result is not obtained
1	WHT (VBU)	Under all conditions	Measure the voltage between immobilizer-keyless control unit 7P connector terminal No. 1 and body ground: There should be battery voltage.	• Blown No. 23 (10 A) fuse in the under-hood fuse/relay box • An open in the wire
2	YEL (IG1)	Ignition switch ON (II)	Measure the voltage to ground: There should be battery voltage.	• Blown No. 2 (15 A) fuse in the under-dash fuse/relay box • An open in the wire

6. Reconnect the connectors to the immobilizer-keyless control unit, and do these input tests at the following connector.

   - If any test indicates a problem, find and correct the cause, then recheck the system.
   - If all the input tests prove OK, the MICU must be faulty; replace the under-dash fuse/relay box.

Cavity	Wire	Test condition	Test: Desired result	Possible cause if desired result is not obtained
7	BLK (LG)	Under all conditions	Measure the voltage to ground: There should be less than 0.5 V.	• Poor ground (G102) • An open in the wire
6	PNK (IG KEY SW)	Ignition key inserted into the ignition switch	Measure the voltage to ground: There should be less than 1 V.	• Poor ground (G504) • Faulty ignition key switch • Faulty under-dash fuse/relay box • An open in the wire

Immobilizer Key Registration

NOTE:
- The HDS is required for registration of the immobilizer keys.
- Programming the immobilizer also programs the keyless transmitter.
- Check for aftermarket electrical equipment that can cause problems with transponder operation.
- The immobilizer control unit-receiver can store up to six immobilizer Keys.

Add one new key/keyless transmitter

1. Have a registered key, a new immobilizer key, and the first password from the iN system.
2. Connect the HDS to the data link connector.
3. Turn the ignition switch to ON (II).
4. Select "IMMOBILIZER" from the "SYSTEM SELECT" menu.
5. Select "Add and Delete", then "Add 1 key".
6. Do the registration according to the instructions on the HDS screen.
7. Check if the engine can be started by the newly registered key.
8. When prompted by the HDS, do the keyless transmitter programming.

Add and Delete keys/Keyless transmitters, Then select Delete or Add keys

NOTE: If any of the registered keys were lost, do the following procedure to delete the lost registered key.

1. Have all registered keys, all new keys, and the first password from the iN system.
2. Connect the HDS to the data link connector.
3. Turn the ignition switch to ON (II).
4. Select "IMMOBILIZER" from the "SYSTEM SELECT" menu.
5. Select "Add and Delete Keys", or "Delete or Add Multiple Keys".
6. Do the registration according to the instructions on the HDS screen.
7. Check if the engine can be started by all the registered keys.
8. When prompted by the HDS, do the keyless transmitter programming.

All keys are lost

1. Prepare all new keys and have the immobilizer PCM code from the iN system.
2. Connect the HDS to the data link connector.
3. Turn the ignition switch to ON (II).
4. Select "IMMOBILIZER" from the "SYSTEM SELECT" menu.
5. Select "Add and Delete Keys", then "ALL KEYS LOST".
6. Do the registration according to the instructions on the HDS screen.
7. Check if the engine can be started by all the registered keys.
8. When prompted by the HDS, do the keyless transmitter programming.

Programming immobilizer-keyless control unit

1. Have all registered keys and the PCM code.
2. Connect the HDS to the data link connector.
3. Turn the ignition switch to ON (II).
4. Select IMMOBILIZER from the SYSTEM SELECT menu.
5. Select REPLACE IMMOBILIZER/KEYLESS CONTROL UNIT REPLACE.
6. Do the registration according to the instructions on the HDS screen.
7. Check that the engine can be started with all registered keys.
8. When prompted by the HDS, do the keyless transmitter programming.

Immobilizer-keyless Control Unit Replacement

1. Remove the driver's dashboard lower cover (see page 20-89).

2. Remove the steering column covers (see page 17-10).

3. Disconnect the 7P connector (A) from the immobilizer-keyless control unit (B).

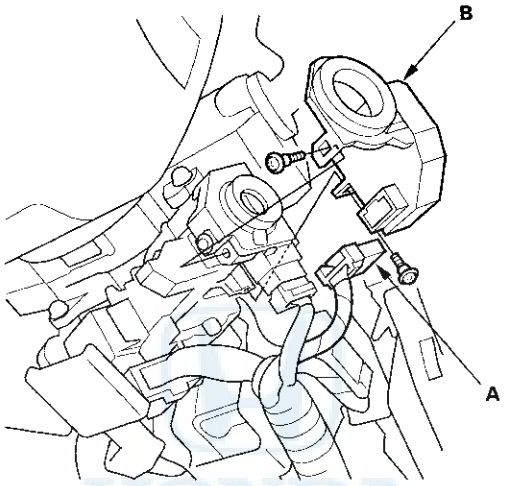

4. Remove the two screws and the immobilizer-keyless control unit.

5. Install the immobilizer-keyless control unit in the reverse order of removal.

6. After replacement, register the immobilizer-keyless control unit (see page 22-301), and make sure the immobilizer system work properly.

SUPPLEMENTAL RESTRAINT SYSTEM (SRS) (If Audio, Navigation, and Telematics maintenance is required)

The Civic Hybrid SRS includes a driver's airbag in the steering wheel hub, a passenger's airbag in the dashboard above the glove box, seat belt tensioners in the front seat belt retractors, seat belt buckle tensioners in the front seat belt buckles, side curtain airbags in the sides of the roof, and side airbags in the front seat-backs. Information necessary to safely service the SRS is included in this Service Manual. Items marked with an asterisk (*) on the contents page include or are located near SRS components. Servicing, disassembling, or replacing these items requires special precautions and tools, and should be done by an authorized Honda dealer.

- To avoid rendering the SRS inoperative, which could lead to personal injury or death in the event of a severe frontal or side collision, all SRS service work should be done by an authorized Honda dealer.
- Improper service procedures, including incorrect removal and installation of the SRS, could lead to personal injury caused by unintentional deployment of the airbags, side airbags, and/or side curtain airbags.
- Do not bump or impact the SRS unit, front impact sensors, side impact sensors, or rear safing sensor when the ignition switch is in ON (II), or for at least 3 minutes after the ignition switch is turned to LOCK (0); otherwise, the system may fail in a collision, or the airbags may deploy.
- SRS electrical connectors are identified by yellow color coding. Related components are located in the steering column, front console, dashboard, dashboard lower panel, in the dashboard above the glove box, in the front seats, in the roof side, and around the floor. Do not use electrical test equipment on these circuits.

Audio, Navigation, and Telematics

'06-08 models 23-1
'09 model 23-147

HONDA

Audio, Navigation, and Telematics ('06-08 models)

Special Tools 23-2

Audio System

Component Location Index 23-3
Symptom Troubleshooting Index 23-4
System Description 23-6
Circuit Diagram 23-16
Self-diagnostic Function 23-20
Error Codes 23-24
Symptom Troubleshooting 23-26
Sound Quality Diagnosis 23-65
* Audio Unit Removal/Installation 23-70
XM Receiver Removal/Installation 23-72
Speaker Replacement 23-72
Auxiliary Jack Assembly Replacement 23-74
* Audio Remote Switch Test 23-74
* Audio Remote Switch Replacement 23-75
AM/FM Antenna Replacement 23-75
AM/FM/XM Antenna Replacement 23-76

Navigation System

Component Location Index 23-77
General Troubleshooting Information 23-78
Symptom Troubleshooting Index 23-86
System Description 23-89
Circuit Diagram 23-106
Symptom Troubleshooting 23-107
System Diagnostic Mode 23-123
CD, DVD, and PC Card Removal/Installation 23-142
* Navigation Unit Removal/Installation 23-143
* Voice Control Switch Test 23-144
Voice Control Switch Replacement 23-145
Microphone Replacement 23-145
GPS Antenna Removal/Installation 23-146

Special Tools

Ref. No.	Tool Number	Description	Qty
①	07AAZ-SDBA100	Diagnostics CD	1
②	07AAZ-SDBA200 (ABEX-TCD-725B)	Skip Test CD	1
③	07AAZ-SDBA300 (ABEX-TCD-721)	Skip Test CD	1

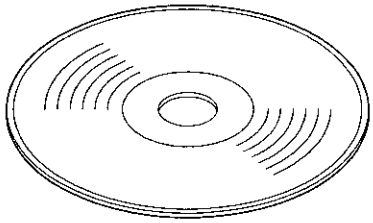

①, ②, ③

Component Location Index

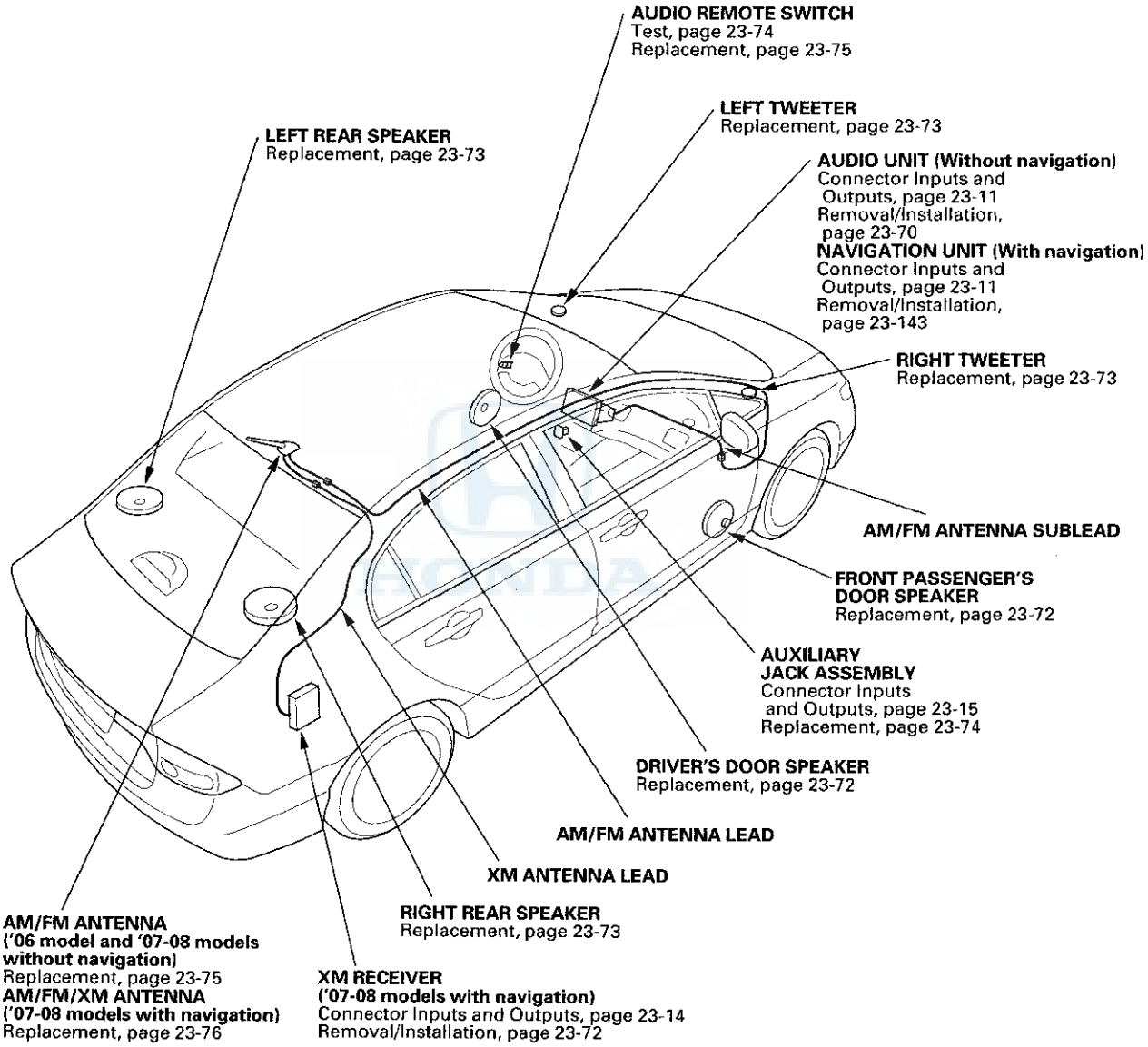

Symptom Troubleshooting Index

Symptom	Diagnostic procedure	Also check for
Poor AM or FM radio reception or interference (with navigation)	Symptom Troubleshooting (see page 23-26)	AM/FM antenna lead and/or sublead short or open in the wire
Poor AM or FM radio reception or interference (without navigation)	Symptom Troubleshooting (see page 23-30)	AM/FM antenna lead and/or sublead short or open in the wire
Audio unit power switch will not turn on (No information display and no sound) (with navigation)	Symptom Troubleshooting (see page 23-33)	
Audio unit power switch will not turn on (No information display and no sound) (without navigation)	Symptom Troubleshooting (see page 23-34)	
Audio unit power switch will not turn off (with navigation)	Symptom Troubleshooting (see page 23-35)	
Audio unit power switch will not turn off (without navigation)	Symptom Troubleshooting (see page 23-36)	
No sound is heard from the speaker(s) (display is normal) (with navigation)	Symptom Troubleshooting (see page 23-37)	
No sound is heard from the speaker(s) (display is normal) (without navigation)	Symptom Troubleshooting (see page 23-39)	
Auxiliary input sound is low or cannot be heard	Symptom Troubleshooting (see page 23-41)	
Audio system sound is weak or distorted (display is normal)	Symptom Troubleshooting (see page 23-44)	
Radio preset memory is lost	Symptom Troubleshooting (see page 23-45)	Internal error
Volume does not change	Symptom Troubleshooting (see page 23-45)	
Volume does not increase with speed (with navigation)	Symptom Troubleshooting (see page 23-46)	
Volume does not increase with speed (without navigation)	Symptom Troubleshooting (see page 23-47)	
Volume is too high or too low when driving at freeway speeds	Symptom Troubleshooting (see page 23-48)	
Radio tuner does not change stations	Symptom Troubleshooting (see page 23-48)	

Symptom	Diagnostic procedure	Also check for
Navigation unit button illumination does not work (with navigation)	Symptom Troubleshooting (see page 23-49)	
Audio unit button illumination does not work (without navigation)	Symptom Troubleshooting (see page 23-50)	
Display does not dim or brighten with dimmer (without navigation)	Symptom Troubleshooting (see page 23-51)	
Audio disc does not load	Symptom Troubleshooting (see page 23-52)	
Audio disc does not eject	Symptom Troubleshooting (see page 23-52)	
Audio disc does not play	Symptom Troubleshooting (see page 23-53)	
Audio disc skips	Symptom Troubleshooting (see page 23-53)	
Audio remote switch does not work properly (with navigation)	Symptom Troubleshooting (see page 23-54)	
Audio remote switch does not work properly (without navigation)	Symptom Troubleshooting (see page 23-56)	
Audio disc cannot be inserted and/or ejected (with navigation)	Symptom Troubleshooting (see page 23-57)	
Display can be opened and/or closed even when an audio disc is being inserted or ejected	Replace the navigation unit (see page 23-143)	
PC card will not play/card icon on audio screen cannot be selected (with navigation)	Symptom Troubleshooting (see page 23-58)	
Error code: XM NO SIGNAL or XM ANTENNA is displayed (with navigation)	Symptom Troubleshooting (see page 23-59)	
XM radio display is blank and no station information is displayed (with navigation)	Symptom Troubleshooting (see page 23-59)	
XM radio preset memory is lost (with navigation)	Symptom Troubleshooting (see page 23-62)	
Poor or no sound with XM radio (Navigation unit does display XM channels) (with navigation)	Symptom Troubleshooting (see page 23-63)	

Audio System ('06-08 models)

System Description

Overview

The audio unit acts as the processor for all audio functions. Select audio functions from the audio unit, the audio remote (on the steering wheel), or by using the navigation voice control system. The audio display provides the current audio status. For vehicles with navigation, additional audio information is available by touching the audio button on the navigation audio screen. (See the owner's manual and the navigation system manual for more details.)

The XM receiver passes its signal to the audio unit. In addition, it communicates with the audio unit via the GA-Net bus. Any open connections in the GA-Net bus circuit causes audio and navigation functions to appear inoperative.

For vehicles with navigation, pressing the open/close switch on the navigation display panel allows access to the CD slot and PC card.

A security signal is daisy-chained between the audio and vehicle components for integration into the vehicle's security system.

Speed-sensitive volume compensation (SVC)
Some audio systems are equipped with speed-sensitive volume compensation (SVC). The navigation or audio unit receives the vehicle speed pulse (VSP) from the PCM. The system processes the speed input and increases the navigation or audio system volume level as the vehicle speed increases to compensate for the various interior noises that occur at higher speeds. When the vehicle slows down, the volume returns to its normal level. The SVC has four settings: SVC OFF, LOW, MID and HIGH that can be adjusted using the navigation or audio unit. The SVC comes from the factory with the MID setting as the default.

To change the audio unit SVC setting, press the tune folder sound knob repeatedly until the SVC is displayed, rotate the knob to adjust the SVC to the desired setting (SVC OFF, LOW, MID, or HIGH).

To change the navigation unit SVC setting, press the AUDIO button, and then select the SOUND icon on the navigation display. Press the navigation display to select the desired setting (OFF, LOW, MID, HI).

The navigation system allows voice control for the audio, XM, PC card, and CD player. The GA-Net (audio unit) communicates the voice control commands. When using the navigation TALK/BACK button, the audio is muted on all speakers and you hear navigation sound on the front channels. When using the navigation or route guidance (RG), the front speakers provides the navigation sound and the rear speakers continue to play. For more information, see the navigation section. The outline of the interruption function is shown in this table.

Contents	Audio output				
	Left front CH	Right front CH	Right rear CH	Left rear CH	Subwoofer CH
Navigation TALK/BACK Buttons	Navigation voice output	Navigation voice output	Muted	Muted	Muted
Route Guidance	Navigation voice output	Navigation voice output	Audio	Audio	Audio

GA-Net Bus Configuration

The GA-Net bus passes audio and navigation commands throughout the navigation and audio components. These commands include navigation touch screen and hard button signals, audio/XM selections by voice, and XM station and music title names. Because the entire bus is daisy chained between components (see diagram), any open or short in the GA-Net bus harness will cause any or all of these functions to become inoperative. The addition of any audio accessory must maintain the continuity of the GA-Net bus by installing the Y cable included with the accessory kit.

System Diagram (with navigation)

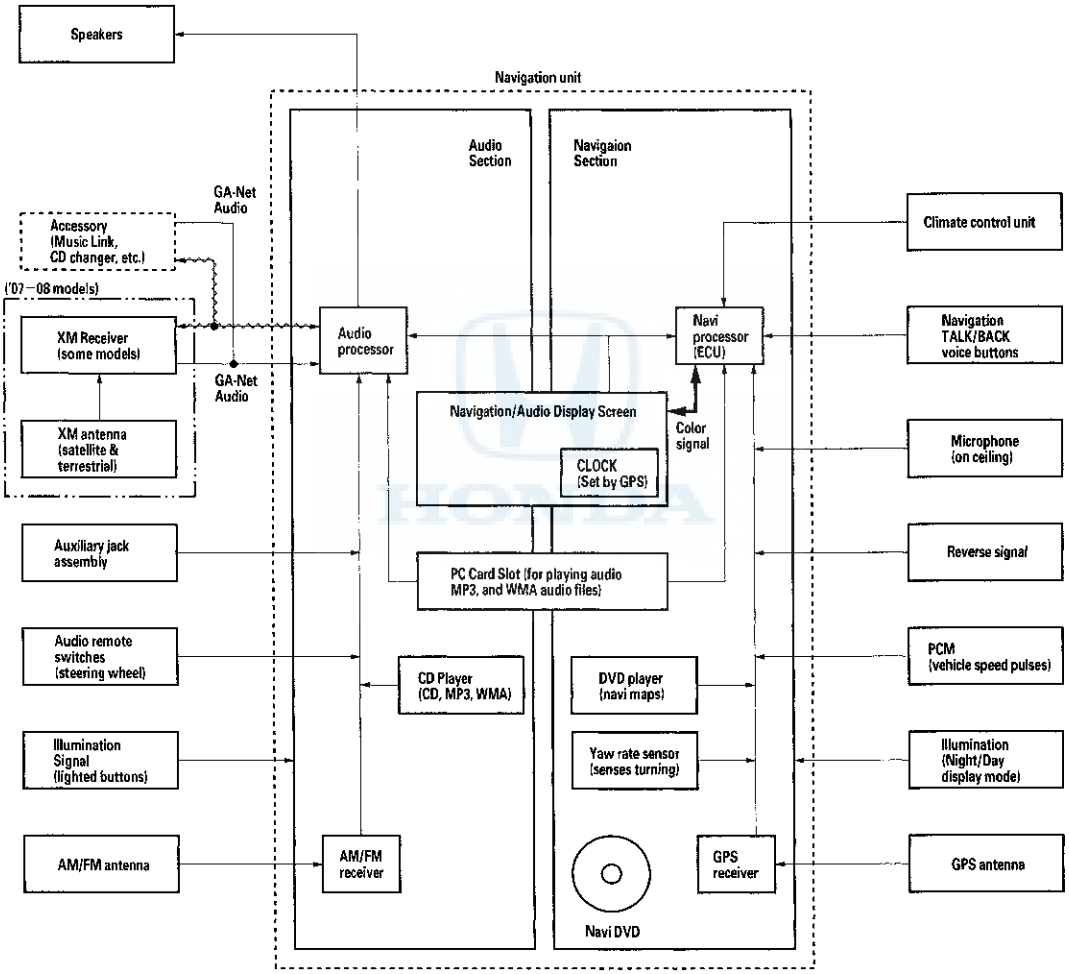

(cont'd)

System Description (cont'd)

NOTE: All items may not apply to this vehicle. See the owner's manual for more information.

Audio Glossary

Item	Definition
Active noise cancellation	The active noise cancellation system cancels some of the vehicle noise. This occurs in the 1,500—2,400 rpm range. Microphones detect the low frequency sound, and the system outputs a canceling sound from the audio speaker.
AM (Amplitude Modulation)	The type of transmission used in the standard radio broadcast band from 530 to 1710 kHz.
Amplifier	A device that increases the level of a signal by increasing the current or voltage.
Antenna	A device used to send or receive electromagnetic waves through the air.
ATA (PC Card)	A type of card that has been tested for use in playing WMA, and MP3 music files in the PC Card slot. Sizes of up to 1 GB have been tested.
Audio remote switch	The switches on the steering wheel that control the audio system.
Auxiliary jack	Allows the customer to use a portable audio device to input audio recordings.
Balance	A control that changes the relative volume of the left and right channels.
Band	A range of frequencies between two definite limits. Bands are assigned by the Federal Communications Commission for specific uses.
Bass	An adjustment for the low frequency sounds of around 160 Hz and below.
Byte	A unit of storage for computer files and memory. A CD holds approximately 700 million bytes.
Cassette	Audio or video magnetic tape container having two reels. Customers can insert it for playback.
Compact flash	A standard for small-size (3 x 4 cm), memory cards used in mobile computers, PDAs, digital cameras. Compact flash memory cards are available in size of 32 MB up to 4 GB or more and can be played in the audio PC slot. Sizes above 1 GB have not been tested.
CD (Compact Disc)	A 4.5-inch plastic disc containing digital audio recording that is played optically on a laser equipped player. Never use discs with a paper label. In a hot vehicle, labels can curl up and jam the unit.
CD (audio disc) changer	CD player that can store and play more than one CD. Two types are available. Some units accept CDs fed into the changer one at a time, and others accept a magazine (with CDs stacked in a container).
CD player	A component designed to play compact disc recordings using a laser optical pickup. The signal from a CD player usually requires amplification.
CSF (Cold Start Fix) screens	These screens are displayed if the system requires a GPS initialization. The vehicle should be moved outside into an open area away from buildings/power lines.
Decibels (db)	A method of measuring sound or radio signal strength received by the audio unit antenna.
Distortion	Inexact reproduction of an audio signal caused by playing music at levels the audio system cannot handle.
Dolby (noise reduction)	A processing system developed by Dolby Laboratories that reduces the background noise on recording media. The result is a cleaner playback from the audio system.
DUET	A serial data communication line used for sub display.
DVD (Digital Versatile Disc)	A 4.5-inch CD-like format used for storing movies with digital audio and video features. The DVD-A format is a DVD format designed for DVD audio systems. Some vehicles can play DVD and DVD-A formats.
Equalizer	A device that changes the relative volume of individual frequency bands to suit personal tastes of the listener.
Fader	The control that adjusts the relative volume levels of front and rear speakers in a four-speaker system.
Format	To prepare a PC Card to receive files this function is done on a PC. Always choose either FAT or FAT32, as the NTFS format is not accepted by the system. Pick the default sectors for the format method selected.

Audio Glossary

Item	Definition
FM (Frequency Modulation)	The form of modulation used for radio and television sound transmission in most of the world. Less prone to interference than AM. The FM broadcast band in North America covers roughly 87.7 to 107.9 MHz.
GA-Net	The GA-Net allows the audio unit to communicate with all the audio and navigation components in a vehicle. If there is an open in the GA-Net or components, the entire audio and navigation system may appear inoperative.
GB (Gigabyte)	A unit of memory or disk storage equal to billion bytes (1000 million bytes).
HDD	Abbreviation for hard disc drive. They are sensitive to heat and it is not recommended that they be used in the PC card slot for playing audio files.
Hertz (Hz)	The unit of frequency equal to one cycle per second (cps). One kilohertz (kHz) equals 1,000 cps; one megahertz (MHz) equals 1 million cps.
Integrated amplifier	A component that combines a pre amp and a power amp into a single unit. A receiver combines an integrated amp and a tuner into a single unit.
Jewel case	The hard plastic case that contains a compact disc or DVD. Always use a jewel case to prevent scratches on the underside of a CD or DVD.
LCD (Liquid Crystal Display)	A type of digital display that changes reflectance or transmittance when an electrical field is applied to it.
Memory	Circuitry or devices that hold information in electrical or magnetic form, such as the AM/FM radio presets.
MB (Megabyte)	One million bytes. Written as 1 MB. Megabytes are used as a measure of digital storage space. For example, a CD can hold 650 MB.
Mic	An abbreviation for microphone. For vehicles with navigation, the microphone accepts navigation voice commands to control audio and navigation functions.
MP3 music files	MP3 is an audio coding format. MP3 is a popular audio compression format on the Internet and computers. CDs and PC Cards with these files can be played on some vehicle's audio system.
Mute	When the navigation gives guidance, the front speakers are muted (no music). When you use the voice control system, all of the speakers are muted.
Noise	Unwanted random sounds like buzzing, hiss, pops, static, whine, etc.
PC card	The slot used for playing MP3 and WMA music files. The PC Card is usually a combination of a small flash card in a PCMCIA adaptor that slides into the slot. The ATA, SD, and compact flash types of cards have been tested up to 1 GB.
PCMCIA	A computer standard for the slot that the PC card slides into. Another term for the PC card slot.
Processor	The part of an audio device that performs tasks/calculations. In the audio unit, the processor handles muting to allow the navi to speak its voice commands, and the decoding/playback of the sound files etc.
Radio	A head unit that combines a tuner, a preamplifier, and often a power-amplifier.
Route guidance (RG)	Spoken voice used for turn-by-turn navigation from the audio speakers.
Stereo	A recording of at least two channels where you can hear sound or music from the left or right side.
SD (Secure Digital) card	This compact type of memory card allows for fast data transfer and has built-in security functions. SD cards have a small write-protection switch on the side.
Shield	A metallic foil or braided wire layer surrounding conductors which are designed to prevent electrostatic or electromagnetic interference (noise) from external sources such as buzzing, or popping sounds heard on the speakers.
Speaker (Loudspeaker)	A device that converts electrical energy into acoustical energy (sound).
Speed-sensitive volume compensation (SVC)	The SVC increases the audio volume to compensate for increased interior noise when the vehicle drivers at freeway speeds.
Subwoofer	A loudspeaker made to reproduce the lowest audio frequencies, about 25 Hz to 125 Hz.

(cont'd)

System Description (cont'd)

Audio Glossary

Item	Definition
Track	A sound recording on a CD, tape, or PC Card.
Treble	An adjustment to control the volume of the high frequency sounds.
Tuner	A component (or part of a component) that receives radio signals and selects one broadcast from many.
Tweeter	A speaker designed to reproduce the higher frequencies (treble) only.
USB	Universal Serial Bus. The USB is used for playing the compressed audio files (MP3, WMA, and AAC) on the external device through the audio unit.
Voice coil	A coil of wire wrapped around a tube and then attached to the speaker cone or diaphragm. When an audio signal is applied, the coil becomes an electromagnet and interacts with the permanent magnet causing the come or diaphragm to vibrate. We interpret this vibrations as sound.
Volume control	Allows you to control the loudness of the music.
WMA music file	Windows Media Audio File. This is an accepted format for music files to be played on either a CD-R, a CD-RW or a PC Card.
Woofer	A speaker that is designed to reproduce low (bass) frequencies only.
XM radio	Satellite based radio transmission, which also uses a ground based repeater network to ensure seamless reception. The channels originate from XM's broadcast center, in Washington, DC, and uplink to two satellites. These satellites transmit the signal across the entire continental United States.
XM receiver	The external component that receives and processes the XM signals from the XM satellites, and terrestrial (land) stations. The audio unit communicates to the XM receiver over the GA-Net bus.

HONDA

Audio Unit Connector for Inputs and Outputs

NOTE: Refer to the navigation section for the connector C, D, F, and H inputs and outputs (see page 23-100).

With navigation (Navigation unit)

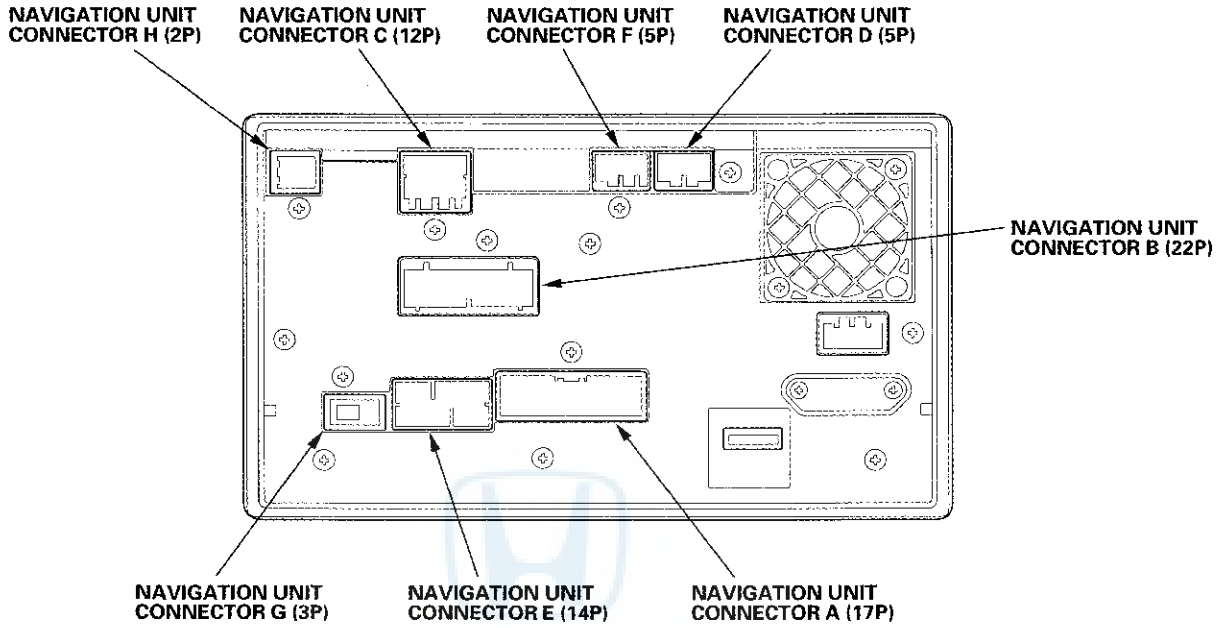

Without navigation

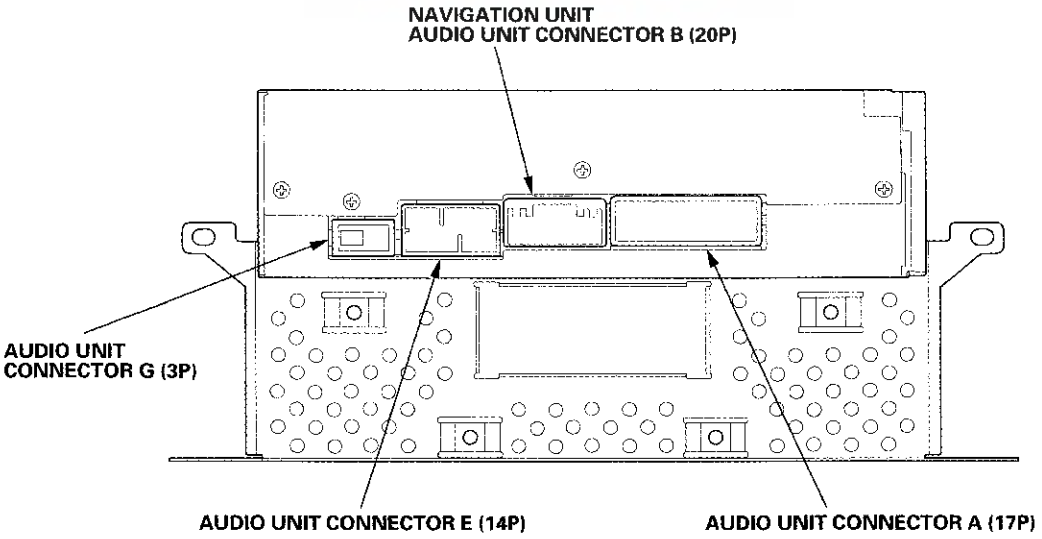

(cont'd)

System Description (cont'd)

NAVIGATION UNIT/AUDIO UNIT CONNECTOR A (17P)

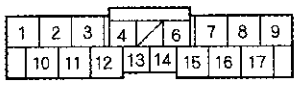

Wire side of female terminals

Cavity	Wire Color	Connect to
A1	RED	Dash lights brightness controller
A2	BRN	Left rear speaker (−)
A3	PNK	Driver's door speaker (−), Left tweeter (−)
A4	GRN	Multiplex integrated control unit (MICU) (SCTY RADIO)
A6	LT BLU	Multiplex integrated control unit (MICU) (K-LINE)
A7	BRN	Front passenger's door speaker (−), Right tweeter (−)
A8	ORN	Right rear speaker (−)
A9	BLK	Body ground to G505 (GND)
A10	GRY	No. 14 (7.5 A) fuse in the under-dash fuse/relay box (ILL+)
A11	YEL	Left rear speaker (+)
A12	LT GRN	Driver's door speaker (+), Left tweeter (+)
A13	BLU	PCM (VSP)
A14	PUR	No. 35 (7.5 A) fuse in the under-dash fuse/relay box (ACC RADIO)
A15	GRY	Front passenger's door speaker (+), Right tweeter (+)
A16	BLU	Right rear speaker (+)
A17	WHT	No. 23 (10 A) fuse in the under-hood fuse/relay box (+B BACK UP)

NAVIGATION UNIT CONNECTOR B (22P) (with navigation)

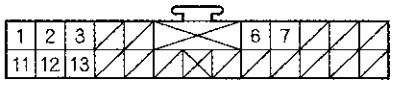

Wire side of female terminals

Cavity	Wire Color	Connect to
B1	BRN	Auxiliary jack assembly (AUX S GND)
B2	GRY*	Shield for terminals No. 1, No. 3, No. 11, No. 12, and No. 13 (AUX SH GND)
B3	BLU	Auxiliary jack assembly (AUX GND)
B6	BRN	Audio remote switch (AUDIO REMOTE GND)
B7	PNK	Audio remote switch (AUDIO REMOTE SW)
B11	YEL	Auxiliary jack assembly (AUX L)
B12	GRN	Auxiliary jack assembly (AUX R)
B13	WHT	Auxiliary jack assembly (AUX DET)

*: The shielded wires have a heat-shrunk tube insulating the outside of the wire. The color of the insulating tube, typically black or dark gray, may not match the color of the wire listed on the schematic.

AUDIO UNIT CONNECTOR B (20P) (without navigation)

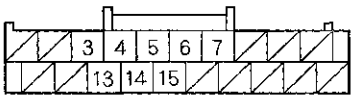

Wire side of female terminals

Cavity	Wire Color	Connect to
B3	BRN	Auxiliary jack assembly (AUX S GND)
B4	GRY*	Shield for terminals No. 3, No. 5, No. 13, No. 14, and No. 15 (AUX SH GND)
B5	BLU	Auxiliary jack assembly (AUX GND)
B6	BRN	Audio remote switch (AUDIO REMOTE GND)
B7	PNK	Audio remote switch (AUDIO REMOTE SW)
B13	YEL	Auxiliary jack assembly (AUX L)
B14	GRN	Auxiliary jack assembly (AUX R)
B15	WHT	Auxiliary jack assembly (AUX DET)

*: The shielded wires have a heat-shrunk tube insulating the outside of the wire. The color of the insulating tube, typically black or dark gray, may not match the color of the wire listed on the schematic.

NAVIGATION UNIT CONNECTOR E (14P) ('07-08 models with navigation)

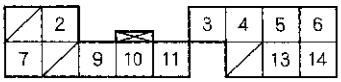

Wire side of female terminals

Cavity	Wire Color	Connect to
E2	LT BLU	XM receiver (SYS ACC)
E3	BRN*	Shield for terminals No. 9 and No. 10 (GA-NET BUS SH)
E4	GRY	Shield for terminals No. 5, No. 6, No. 13, and No. 14 (SAT SH GND)
E5	WHT	XM receiver (SAT R+)
E6	RED	XM receiver (SAT L+)
E7	BLU	XM receiver (+B)
E9	BLU	XM receiver (GA-NET BUS+)
E10	PNK	XM receiver (GA-NET BUS−)
E11	BLK	XM receiver (GND)
E13	BLK	XM receiver (SAT R−)
E14	GRN	XM receiver (SAT L−)

*: The shielded wires have a heat-shrunk tube insulating the outside of the wire. The color of the insulating tube, typically black or dark gray, may not match the color of the wire listed on the schematic.

NAVIGATION UNIT/AUDIO UNIT CONNECTOR G (3P)

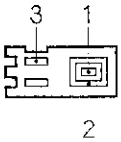

Terminal side of female terminals

Cavity	Wire Color	Connect to
G1	——	AM/FM/XM antenna*1, AM/FM antenna*2 (RF IN)
G2	——	Shield for terminal No. 1 (RF SH)
G3	——	AM/FM/XM antenna*1, AM/FM antenna*2 (ANT +B)

* 1: '07-08 models with navigation
* 2: '07-08 models without navigation

(cont'd)

Audio System ('06-08 models)

System Description (cont'd)

XM Receiver Connector for Inputs and Outputs ('07-08 models with navigation)

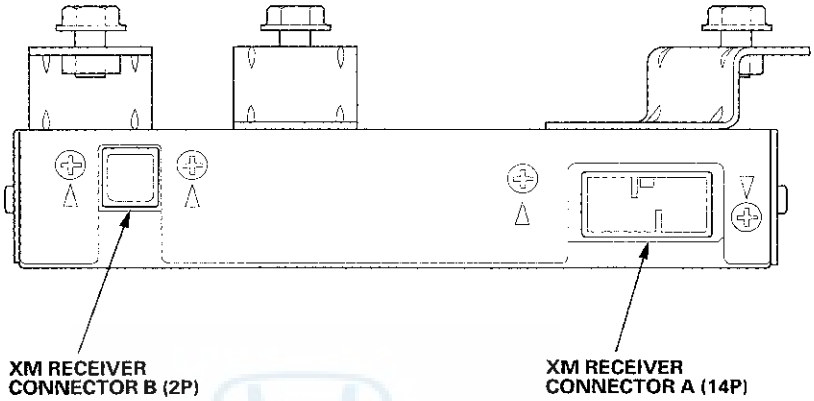

XM RECEIVER CONNECTOR A (14P)

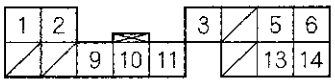

Wire side of female terminals

Cavity	Wire Color	Connect to
A1	BLU	Navigation unit (+B)
A2	LT BLU	Navigation unit (SYS ACC)
A3*	BRN*	Shield for terminals No. 9 and No. 10 (GA-NET BUS SH)
A5	WHT	Navigation unit (SAT R+)
A6	RED	Navigation unit (SAT L+)
A9	BLU	Navigation unit (GA-NET BUS+)
A10	PNK	Navigation unit (GA-NET BUS−)
A11	BLK	Navigation unit (GND)
A13	BLK	Navigation unit (SAT R−)
A14	GRN	Navigation unit (SAT L−)

*: The shielded wires have a heat-shrunk tube insulating the outside of the wire. The color of the insulating tube, typically black or dark gray, may not match the color of the wire listed on the schematic.

XM RECEIVER CONNECTOR B (2P)

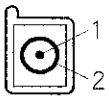

Terminal side of female terminals

Cavity	Wire Color	Connect to
B1	———	Satellite signal antenna (SIG)
B2	———	Shield for terminal No. 1 (SH (XM))

Auxiliary Jack Assembly Connector for Inputs and Outputs

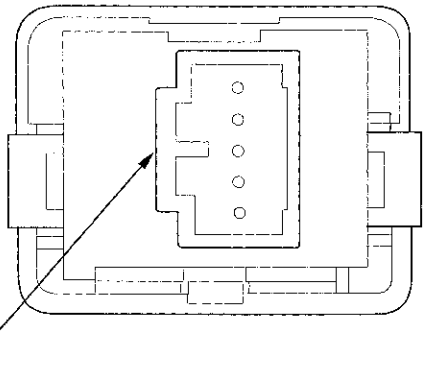

AUXILIARY JACK ASSEMBLY 5P CONNECTOR

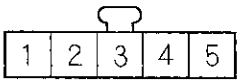

Wire side of female terminals

With navigation

Cavity	Wire Color	Connect to
1	WHT	Navigation unit (AUX DET)
2	BLU	Navigation unit (AUX GND)
3	BRN	Navigation unit (AUX S GND)
4	YEL	Navigation unit (AUX L)
5	GRN	Navigation unit (AUX R)

Without navigation

Cavity	Wire Color	Connect to
1	WHT	Audio Unit (AUX DET)
2	BLU	Audio Unit (AUX GND)
3	BRN	Audio Unit (AUX S GND)
4	YEL	Audio Unit (AUX L)
5	GRN	Audio Unit (AUX R)

Audio System ('06-08 models)

Circuit Diagram

With Navigation

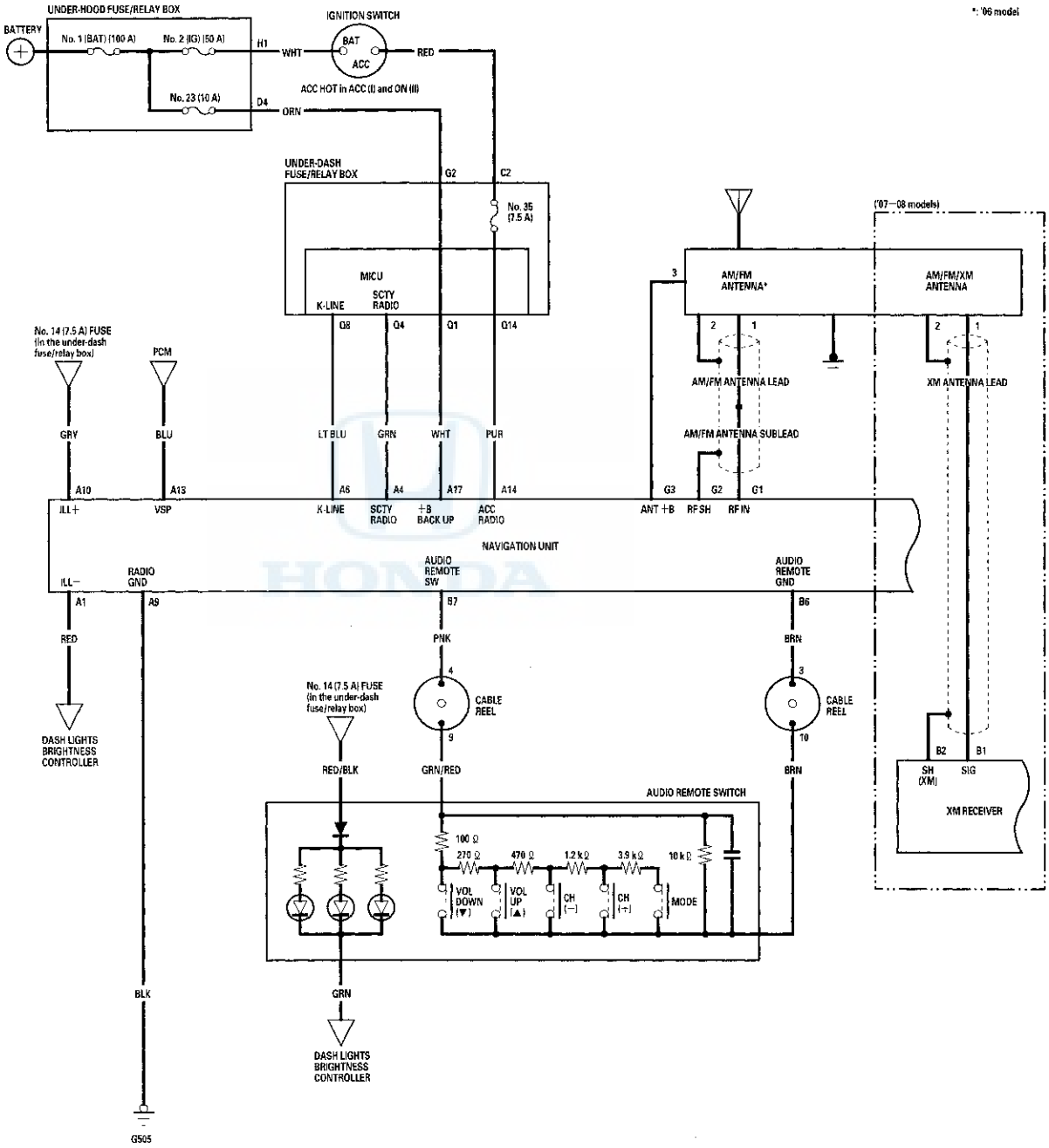

*: The shielded wires have a heat-shrunk tube insulating the outside of the wire. The color of the insulating tube, typically black or dark gray, may not match the color of the wire listed on the schematic.

- - - - - - - : Shielding

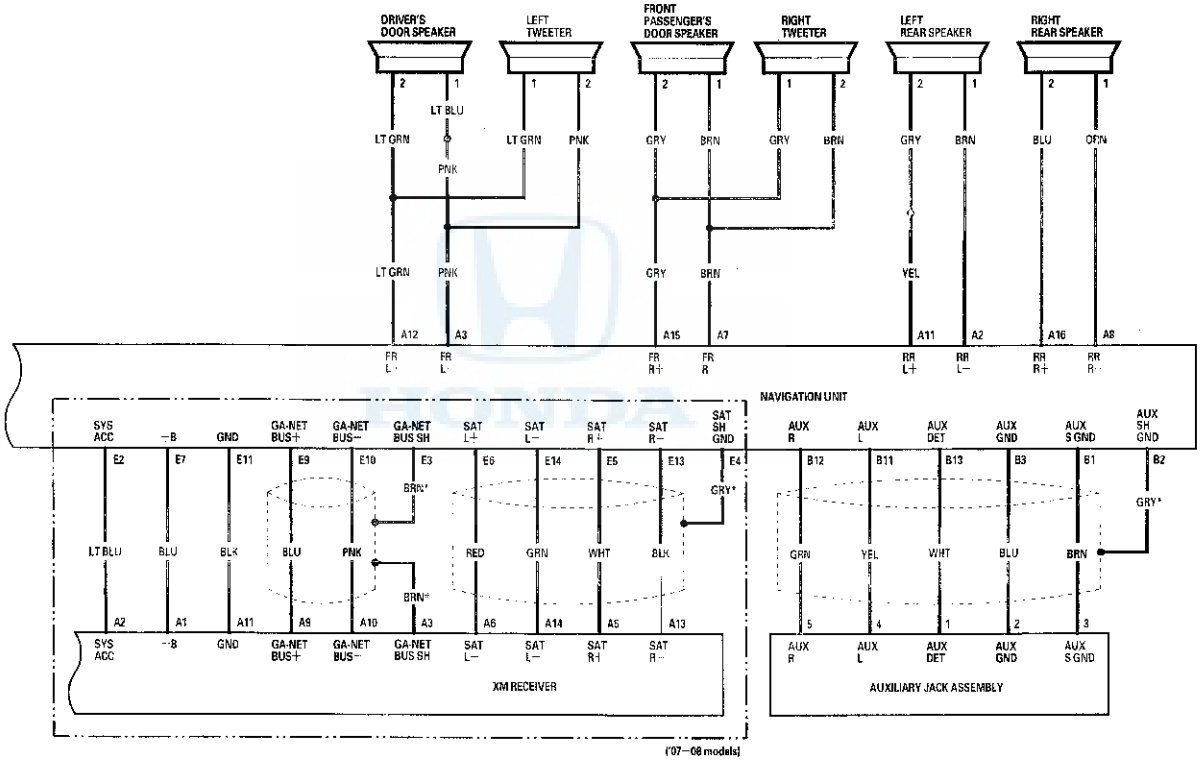

('07—08 models)

Circuit Diagram (cont'd)

Without Navigation

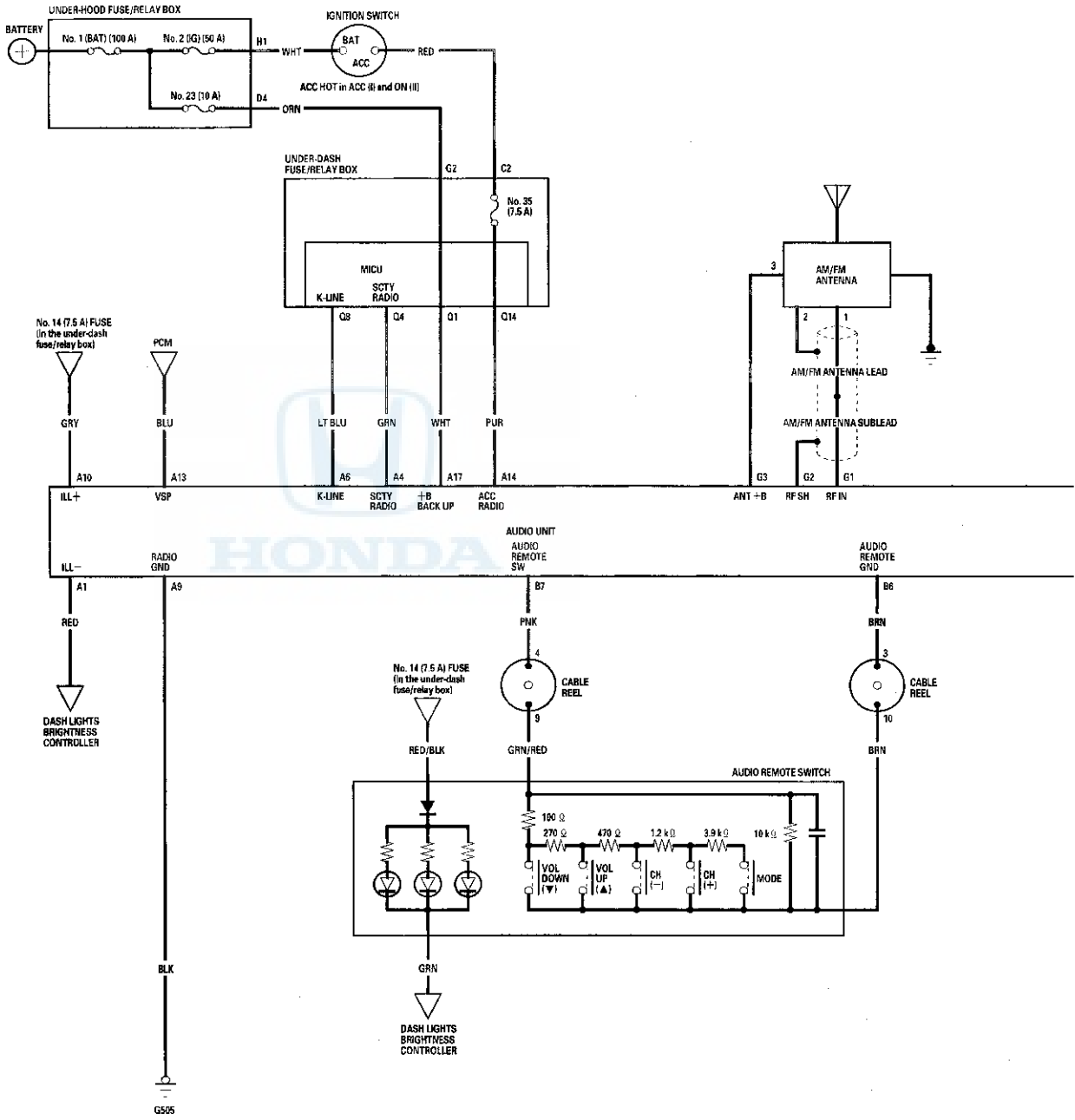

*: The shielded wires have a heat-shrunk tube insulating the outside of the wire. The color of the insulating tube, typically black or dark gray, may not match the color of the wire listed on the schematic.

- - - - - - - : Shielding

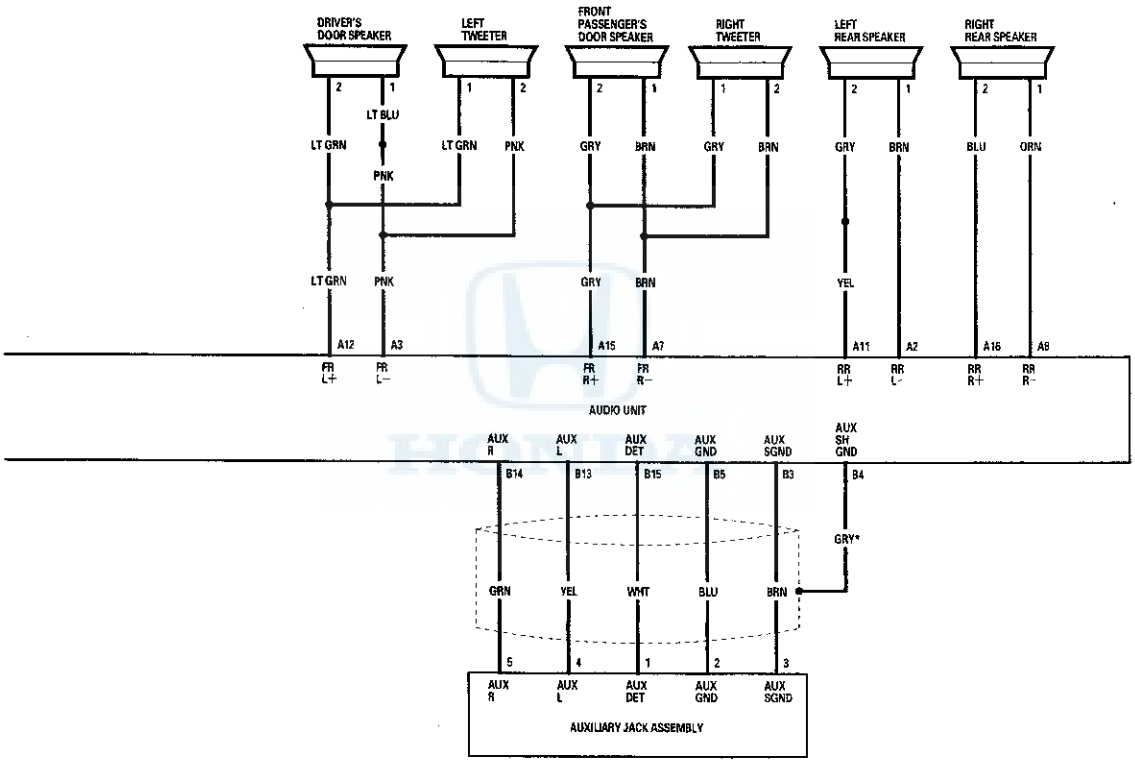

Self-diagnostic Function

Without Navigation

The audio system has a self-diagnostic function.

How to obtain the Audio Unit Serial Number

To obtain the audio unit serial number on a vehicle, do the following:

NOTE:
- This procedure can only be performed after the battery power is disconnected once and reconnected to the audio unit and the audio unit displays CODE when the radio is turned on.
- To obtain the navigation unit serial number, refer to Navi ECU in the navigation system diagnostic mode (see page 23-127).

1. Turn the ignition switch to ON (II).
2. Make sure the audio system is turned off.
3. Push and hold the preset No. 1 and No. 6 buttons.
4. While holding the buttons, push the VOL PUSH PWR knob (A) to ON.

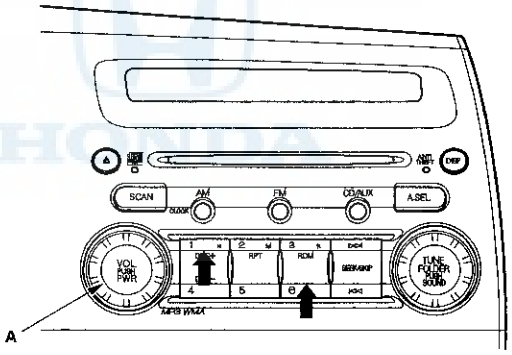

5. Release the buttons and the self-diagnostic begins.
6. The display shows an 8 digit serial number.

   Eight digits of the serial number (example 12345678)

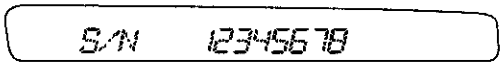

7. Use all 8 numbers as the serial number when using the Interactive Network (*i*N) to retrieve the 5 digit anti-theft code.
8. To end the self-diagnostic function, turn the audio unit off, or turn the ignition switch to LOCK (0).

How to check for audio system condition

NOTE:
- The audio unit must be in the code enter screen before performing the self-diagnostic function.
- The self-diagnostic function does not find every problem with the audio system. Check any official Honda service website for more information about the audio system.

1. Turn the ignition switch to ON (II).

2. Make sure the audio system is turned off.

3. Push and hold the preset No. 1 and No. 6 buttons.

4. While holding the buttons, push the VOL PUSH PWR knob (A) to ON.

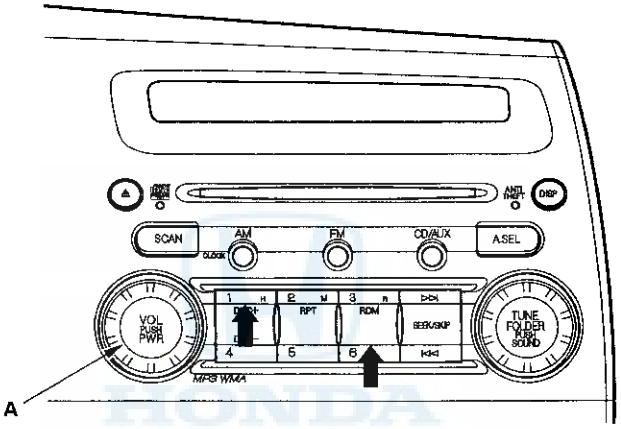

5. Release the buttons and the self-diagnostic begins.

6. When you are in the self-diagnostic mode, pressing a preset button starts, the input will trigger the diagnostic mode that is assigned to that preset switch.

   No. 3 button
   Entire LCD lighting/light-out mode: Turns on/off the entire LCD to show if a LCD segment is stuck on or dead (off). If a LCD segment is stuck on, or is dead, replace the audio unit.

   No. 4 button
   Duty indication mode (for the Illumination dim): Indicates the duty for the Illumination dim.

   No. 5 button
   Vehicle speed pulse indication mode: Indicates the vehicle speed pulse.

   FM button (Push and hold 5 sec.)
   Reception level check mode: Indicates the reception level (db). When entering the reception level check mode, the AM/FM button is used to change the main/sub antenna. See Reception level indication for more information.

   CD button (Push and hold 5 sec.)
   DRAM residual quantity indication mode: Indicates the DRAM residual quantity.

(cont'd)

Self-diagnostic Function (cont'd)

7. To end the self-diagnostic function, turn the audio unit off, or turn the ignition switch to LOCK (0).

Display Specifications

Entry LCD Lighting
No. 3 button

Entry LCD Lights-outs
No. 3 button

Duty (for the illumination) indication
No. 4 button

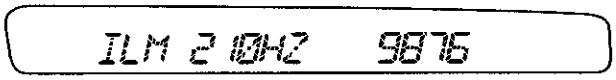

Vehicle speed pulse indication
No. 5 button

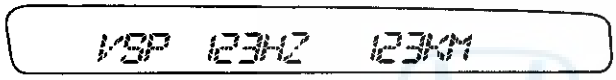

Reception level indication
FM button

DRAM residual quantity indication
CD button

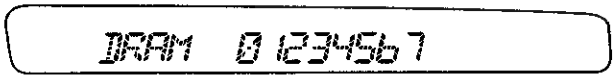

Speaker check mode

8. Turn off the audio unit.

9. Push and hold the No. 1 and No. 3 buttons. While holding the buttons, push the VOL push PWR knob to ON. Release the buttons and the speaker check mode begins. A low-frequency hum should sound for about one minute. Change the test speaker by pushing the SKIP button. If you find a speaker(s) with no sound, check the speaker and harness connections. If the connections are good, replace the speaker and retest.

10. To end the self-diagnostic function, turn the audio unit off, or turn the ignition switch to LOCK (0).

Reception level indication mode

This diagnostic screen checks the audio unit's reception level. This level then can be used in the diagnosis of audio unit reception quality. The reception level is displayed in decibels (dB).

Preperation:
- Park the vehicle outdoors in an appropriate location for good radio reception.
- Tune to a powerful local FM radio station then write down the radio station number.

1. Enter the reception level indication mode in the self-diagnostic function. The AM/FM antenna amplifier is on (A.SEL or TP is not displayed in the audio-HVAC display).

2. Tune to the FM radio station you wrote down in Preperation using the TUNING knob, and note the decibel level of that station when you release the button.

3. Press and release the A.SEL button to turn the AM/FM antenna amplifier off (A.SEL or TP is now displayed in the audio-HVAC display).

4. Tune to the FM radio station you wrote down in Preperation using the TUNING knob, and note the decibel level of that station when you release the button.

5. Press and release the A.SEL button to turn the AM/FM antenna amplifier back on (A.SEL or TP is not displayed in the audio-HVAC display).

6. Turn the ignition switch to LOCK (0) or audio unit off to exit the test mode.

7. Compare your results to a known-good vehicle, (make sure it is the same year and trim level) in the same location and direction, and under the same environmental conditions.

HONDA

Audio System ('06-08 models)

Error Codes

The audio system displays error codes when a problem is detected with the disc changer, the disc, the XM radio, or the anti-theft code.

NOTE: This is not a complete list of audio error codes. Refer to symptom troubleshooting, or go to any official Honda service website for more service information.

CD Error Codes ('06-07 models and '08 model with navigation)

Error Code Displayed	Possible Cause	Solution
DISC ERROR	The system cannot read the disc because an audio or video DVD is inserted into the unit. The CD may be inserted upside down.	Verify that the unit functions with a standard mass production CD.
MECH ERROR	There is a problem with the mechanism A CD label may be jammed in the mechanism.	Replace the navigation unit.

CD Error Codes ('08 model without navigation)

Error Code Displayed	Possible Cause	Solution
BAD DISC-PLEASE CHECK OWNERS MANUAL PUSH EJECT	• CD label jammed in the mechanism. • CD eject mechanism or motor is inoperative. • CD spindle motor won't spin up the CD. • The wrong type disc is inserted.	Press the EJECT button and hold it for 5 seconds. If the disc does not eject, try again. If the disc still won't eject, replace the unit.

CD Error Codes ('06-08 models)

Error Code Displayed	Possible Cause	Solution
HEAT ERROR	CD player is too hot. This can happen if the vehicle is parked in the sunlight all day.	The unit should function normally when it cools off.
FORMAT	Audio unit cannot read the files on the CD or CD-R.	Current track is skipped. The next supported track or file plays automatically. • Verify that CD, CD-R or CD-RW file names end in CD-A or WMA. • Verify that CD, CD-R or CD-RW with compressed music formats end in MP3 or WMA. • Other file formats like I-tunes or Ogg are not recognized. • WMA files may have (DRM) copy protection, and cannot be read.

XM Error Codes

Error Code Displayed	Possible Cause	Solution
LOADING	XM radio is acquiring audio or program information.	Wait until the radio receives the information.
(XM) OFF AIR	XM channel not in service.	Try another XM channel.
(XM) NO SIGNAL	Loss of signal.	Both terrestrial and satellite antennas have lost signal. Park the vehicle outside with a clear view of the southern horizon.
(XM) UPDATING	XM radio is receiving information update from the network.	This message disappears once the update finishes.
(XM) CHECK ANTENNA (XM) ANTENNA ERROR	XM antenna error.	Repair open or short in the satellite antenna. Substitute the XM antenna with a known-good one, and recheck. If the error is gone, replace the original XM antenna. If the error is still present, replace the antenna lead.
— — —	No signal from XM.	Check a known-good vehicle with XM radio. If the known-good vehicle has the same symptoms, contact XM Satellite Radio at 880-852-9696.

Audio Unit Error Codes

Error Code Displayed	Possible Cause	Solution
CODE ERROR 1	Anti-theft code mismatch (1st try).	Enter the correct anti-theft code.
CODE ERROR E	Anti-theft code mismatch (10th try).	Remove the No. 23 (10 A) fuse in the under-hood fuse/relay box, then reinsert it. You will have 10 more tries to enter the correct anti-theft code.

Symptom Troubleshooting

Poor AM or FM radio reception or interference (with navigation)

NOTE:
- Check the vehicle battery condition first.
- Check for aftermarket accessories including cell phones and chargers plugged into the vehicle accessory power sockets.
- Check the connectors for poor connections or loose terminals.
- Check the radio reception in an open area. Compare it to a known-good vehicle whenever possible. Poor reception/interference can be caused by the following:
  - The radio station is far away.
  - Atmospheric conditions are unfavorable.
  - Tall buildings, mountains, or high-voltage power lines are nearby.
  - Aftermarket metallic window tinting or electronic accessories.

1. Turn the ignition switch to ON (II).

2. Do the seek stop test (see page 23-69).

   Is the test vehicle within 10 % of the known-good vehicle?

   YES—Multipath interference or weak station. Operation is normal.■

   NO—Go to step 3.

3. Check if the radio reception/interference is the same in several locations.

   Is the reception/interference the same?

   YES—Go to step 4.

   NO—Multipath interference or weak station. Operation is normal.■

4. Start the engine.

5. Check the reception/interference.

   Is there noise (static or whine) only with the engine running?

   YES—Check the antenna and radio grounds. If OK, check the charging system and the ignition system.■

   NO—Go to step 6.

6. Turn the ignition switch to LOCK (0).

7. Check the AM/FM/XM antenna or AM/FM antenna mast for cracks or other damage. Verify that the AM/FM/XM antenna or AM/FM antenna mast is not loose.

   NOTE: Do not use any tools to tighten the AM/FM/XM antenna or AM/FM antenna mast.

   Is there any damage?

   YES—Replace the AM/FM/XM antenna mast (see page 23-76), or AM/FM antenna mast (see page 23-75).■

   NO—Go to step 8.

8. Disconnect the AM/FM antenna lead 3P connector from the AM/FM/XM antenna or AM/FM antenna.

9. Turn the ignition switch to ON (II) and turn ON the navigation unit.

10. Measure the voltage between the AM/FM/XM antenna or AM/FM antenna 3P connector terminal No. 3 and body ground.

AM/FM/XM ANTENNA 3P CONNECTOR or AM/FM ANTENNA 3P CONNECTOR

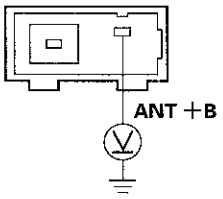

Terminal side of male terminals

Is there battery voltage?

YES—Go to step 11.

NO—Go to step 17.

11. Turn the ignition switch to LOCK (0).

12. Remove the navigation unit (see page 23-143).

13. Check for continuity between navigation unit connector G (3P) terminal No. 1 and the AM/FM/XM antenna or AM/FM antenna 3P connector terminal No. 1.

NAVIGATION UNIT CONNECTOR G (3P)
Terminal side of female terminals

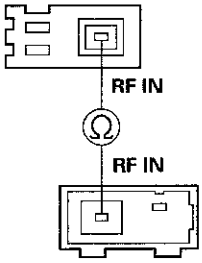

AM/FM/XM ANTENNA 3P CONNECTOR or AM/FM ANTENNA 3P CONNECTOR
Terminal side of male terminals

Is there continuity?

YES—Go to step 14.

NO—Replace the AM/FM antenna lead and/or sublead. ■

14. Check for continuity between navigation unit connector G (3P) terminal No. 1 and body ground.

NAVIGATION UNIT CONNECTOR G (3P)

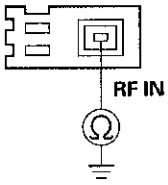

Terminal side of female terminals

Is there continuity?

YES—Replace the AM/FM antenna lead and/or sublead. ■

NO—Go to step 15.

(cont'd)

Symptom Troubleshooting (cont'd)

15. Check for continuity between navigation unit connector G (3P) terminal No. 2 and the AM/FM/XM antenna or AM/FM antenna 3P connector terminal No. 2.

NAVIGATION UNIT CONNECTOR G (3P)
Terminal side of female terminals

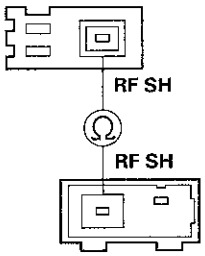

AM/FM/XM ANTENNA 3P CONNECTOR or AM/FM ANTENNA 3P CONNECTOR
Terminal side of male terminals

Is there continuity?

YES—Replace the AM/FM antenna lead and/or sublead. ■

NO—Go to step 16.

16. Check for continuity between navigation unit connector G (3P) terminals No. 1 and No. 2.

NAVIGATION UNIT CONNECTOR G (3P)

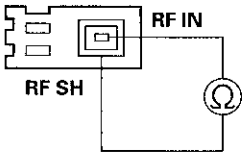

Terminal side of female terminals

Is there continuity?

YES—Replace the AM/FM antenna lead and/or sublead. ■

NO—Replace the AM/FM/XM antenna or AM/FM antenna, and recheck. If the reception is still poor, replace the navigation unit (see page 23-143). ■

17. Turn the ignition switch to LOCK (0).

18. Remove the navigation unit (see page 23-143).

19. Check for continuity between navigation unit connector G (3P) terminal No. 3 and the AM/FM/XM antenna or AM/FM antenna 3P connector terminal No. 3.

NAVIGATION UNIT CONNECTOR G (3P)
Terminal side of female terminals

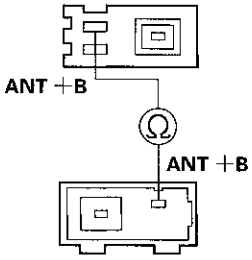

AM/FM/XM ANTENNA 3P CONNECTOR or AM/FM ANTENNA 3P CONNECTOR
Terminal side of male terminals

Is there continuity?

YES—Go to step 20.

NO—Repair open in the wire between the navigation unit and the AM/FM/XM antenna or AM/FM antenna. ■

20. Check for continuity between the AM/FM/XM antenna connector (3P) or AM/FM antenna connector (3P) terminal No. 3 and body ground.

AM/FM/XM ANTENNA 3P CONNECTOR or AM/FM ANTENNA 3P CONNECTOR

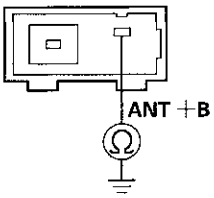

Terminal side of male terminals

Is there continuity?

YES—Repair short in the wire between the navigation unit and the AM/FM/XM antenna or AM/FM antenna. ■

NO—Substitute a known-good navigation unit (see page 23-143), and recheck. ■

Symptom Troubleshooting (cont'd)

Poor AM or FM radio reception or interference (without navigation)

NOTE:
- Check the vehicle battery condition first.
- Check for aftermarket accessories including cell phones and chargers plugged into the vehicle accessory power sockets.
- Check the connectors for poor connections or loose terminals.
- Check the radio reception in an open area. Compare it to a known-good vehicle whenever possible. Poor reception/interference can be caused by the following:
  - The radio station is far away.
  - Atmospheric conditions are unfavorable.
  - Tall buildings, mountains, or high-voltage power lines are nearby.
  - Aftermarket metallic window tinting or electronic accessories.

1. Turn the ignition switch to ON (II).

2. Do the seek stop test (see page 23-69).

   Is the test vehicle within 10 % of the known-good vehicle?

   YES—Multipath interference or weak station. Operation is normal.■

   NO—Go to step 3.

3. Check if the radio reception/interference is the same in several locations.

   Is the reception/interference the same?

   YES—Go to step 4.

   NO—Multipath interference or weak station. Operation is normal.■

4. Start the engine.

5. Check the reception/interference.

   Is there noise (static or whine) only with the engine running?

   YES—Check the antenna and radio grounds. If OK, check the charging system and the ignition system.■

   NO—Go to step 6.

6. Turn the ignition switch to LOCK (0).

7. Check the AM/FM antenna mast for cracks or other damage. Verify that the AM/FM antenna mast is not loose.

   NOTE: Do not use any tools to tighten the AM/FM antenna mast.

   Is there any damage?

   YES—Replace the AM/FM antenna mast (see page 23-75).■

   NO—Go to step 8.

8. Disconnect the AM/FM antenna lead 3P connector from the AM/FM antenna.

9. Turn the ignition switch to ON (II) and turn ON the audio unit.

10. Measure the voltage between AM/FM antenna 3P connector terminal No. 3 at the AM/FM antenna and body ground.

AM/FM ANTENNA 3P CONNECTOR

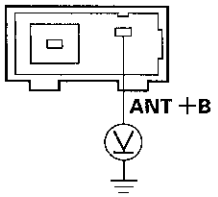

Terminal side of male terminals

Is there battery voltage?

YES—Go to step 11.

NO—Go to step 17.

11. Turn the ignition switch to LOCK (0).

12. Remove the audio unit (see page 23-70).

13. Check for continuity between audio unit connector G (3P) terminal No. 1 and AM/FM antenna 3P connector terminal No. 1.

AUDIO UNIT CONNECTOR G (3P)
Terminal side of female terminals

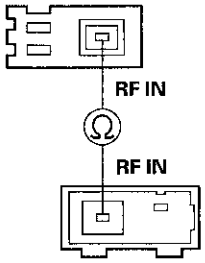

AM/FM ANTENNA 3P CONNECTOR
Terminal side of male terminals

Is there continuity?

YES—Go to step 14.

NO—Replace the AM/FM antenna lead and/or sublead. ■

14. Check for continuity between audio unit connector G (3P) terminal No. 1 and body ground.

AUDIO UNIT CONNECTOR G (3P)

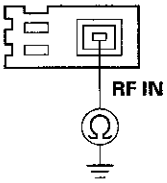

Terminal side of female terminals

Is there continuity?

YES—Replace the AM/FM antenna lead and/or sublead. ■

NO—Go to step 15.

(cont'd)

Symptom Troubleshooting (cont'd)

15. Check for continuity between audio unit connector G (3P) terminal No. 2 and AM/FM antenna 3P connector terminal No. 2.

AUDIO UNIT CONNECTOR G (3P)
Terminal side of female terminals

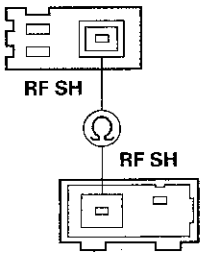

AM/FM ANTENNA 3P CONNECTOR
Terminal side of male terminals

Is there continuity?

YES—Replace the AM/FM antenna lead and/or sublead.■

NO—Go to step 16.

16. Check for continuity between audio unit connector G (3P) terminals No. 1 and No. 2.

AUDIO UNIT CONNECTOR G (3P)

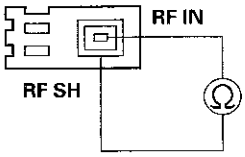

Terminal side of female terminals

Is there continuity?

YES—Replace the AM/FM antenna lead and/or sublead.■

NO—Replace the AM/FM antenna (see page 23-75), and recheck. If the reception is still poor, replace the audio unit (see page 23-70).■

17. Turn the ignition switch to LOCK (0).

18. Remove the audio unit (see page 23-70).

19. Check for continuity between audio unit connector G (3P) terminal No. 3 and AM/FM antenna 3P connector terminal No. 3.

AUDIO UNIT CONNECTOR G (3P)
Terminal side of female terminals

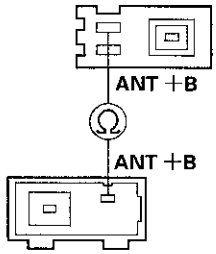

AM/FM ANTENNA 3P CONNECTOR
Terminal side of male terminals

Is there continuity?

YES—Go to step 20.

NO—Repair open in the wire between the audio unit and the AM/FM antenna.■

20. Check for continuity between the AM/FM antenna 3P connector terminal No. 3 and body ground.

AM/FM ANTENNA 3P CONNECTOR

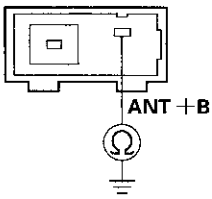

Terminal side of male terminals

Is there continuity?

YES—Repair short in the wire between the audio unit and the AM/FM antenna.■

NO—Substitute a known-good audio unit (see page 23-70), and recheck.■

Audio unit power switch will not turn on (No information display and no sound) (with navigation)

NOTE:
- Check the vehicle battery condition first.
- Check the connectors for poor connections or loose terminals.

1. Turn the ignition switch to ON (II).

2. Push the power switch ON to see if the navigation unit turns ON.

   Does the navigation unit display operate properly, and does the audio sound normal?

   YES—Intermittent failure, the system is OK at this time. ■

   NO—Go to step 3.

3. Turn the ignition switch to LOCK (0).

4. Check the No. 23 (10 A) fuse in the under-hood fuse/relay box and the No. 35 (7.5 A) fuse in the under-dash fuse/relay box.

   Are the fuses OK?

   YES—Go to step 5.

   NO—Replace the fuse(s), and recheck. ■

5. Remove the navigation unit (see page 23-143). Check that the navigation unit is properly connected.

   NOTE:
   - Eject all the discs before removing the navigation unit to prevent damaging the CD player's load mechanism.
   - Remove the PC card before removing the navigation unit.

   Is it connected properly?

   YES—Go to step 6.

   NO—Reconnect the connector, and recheck the function. ■

6. Disconnect navigation unit connector A (17P).

7. Turn the ignition switch to ON (II).

8. Measure the voltage between body ground and navigation unit connector A (17P) terminals No. 14 and No. 17 individually.

NAVIGATION UNIT CONNECTOR A (17P)

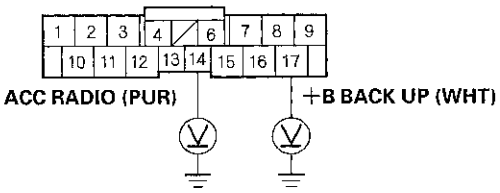

Wire side of female terminals

   Is there battery voltage on both terminals?

   YES—Go to step 9.

   NO—Repair open in the wire(s) between the No. 23 (10 A) fuse in the under-hood fuse/relay box and the No. 35 (7.5 A) fuse in the under-dash fuse/relay box and the navigation unit. ■

9. Turn the ignition switch to LOCK (0).

10. Reconnect navigation unit connector A (24P).

11. Turn the ignition switch to ON (II).

(cont'd)

Symptom Troubleshooting (cont'd)

12. Measure the voltage between navigation unit connector A (17P) terminal No. 9 and body ground.

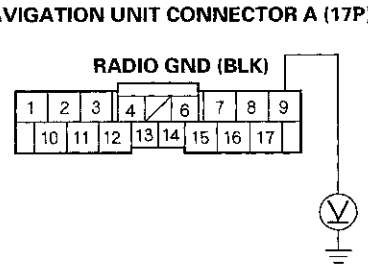

Wire side of female terminals

Is there less than 0.1 V?

YES—Replace the navigation unit (see page 23-143). ■

NO—Repair open in the wire between navigation unit connector A (17P) terminal No. 19 and body ground (G505) (see page 22-28). ■

Audio unit power switch will not turn on (No information display and no sound) (without navigation)

NOTE:
- Check the vehicle battery condition first.
- Check the connectors for poor connections or loose terminals.

1. Turn the ignition switch to ON (II).

2. Push the power switch ON to see if the audio unit turns ON.

   Does the audio unit operate properly, and does the audio sound normal?

   YES—Intermittent failure, the system is OK at this time. ■

   NO—Go to step 3.

3. Turn the ignition switch to LOCK (0).

4. Check the No. 23 (10 A) fuse in the under-hood fuse/relay box and the No. 35 (7.5 A) fuse in the under-dash fuse/relay box.

   Are the fuses OK?

   YES—Go to step 5.

   NO—Replace the fuse(s), and recheck. ■

5. Remove the audio unit (see page 23-70). Check that the audio unit is properly connected.

   NOTE: Eject all the discs before removing the audio unit to prevent damaging the CD player's load mechanism.

   Is it connected properly?

   YES—Go to step 6.

   NO—Reconnect the connector, and recheck the function. ■

6. Disconnect audio unit connector A (17P).

7. Turn the ignition switch to ON (II).

8. Measure the voltage between audio unit connector A (17P) terminal No. 14 and body ground, and between terminal No. 17 and body ground.

AUDIO UNIT CONNECTOR A (17P)

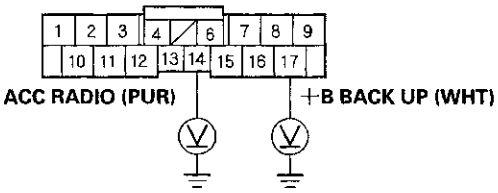

Wire side of female terminals

Is there battery voltage on the both terminals?

YES—Go to step 9.

NO—Repair open in the wire(s) between the No. 23 (10 A) fuse in the under-hood fuse/relay box and the No. 35 (7.5 A) fuse in the under-dash fuse/relay box and the audio unit. ■

9. Turn the ignition switch to LOCK (0).

10. Reconnect audio unit connector A (17P).

11. Measure the voltage between audio unit connector A (17P) terminal No. 9 and body ground.

AUDIO UNIT CONNECTOR A (17P)

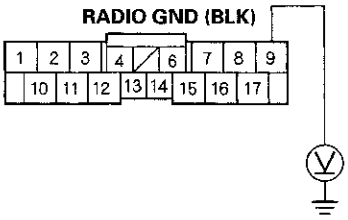

Wire side of female terminals

Is there less than 0.1 V?

YES—Replace the audio unit (see page 23-70). ■

NO—Repair open in the wire between audio unit connector A (17P) terminal No. 9 and body ground (G505) (see page 22-28). ■

Audio unit power switch will not turn off (with navigation)

NOTE:
- Check for aftermarket accessories plugged into the vehicle's accessory power sockets.
- Check the connectors for poor connections or loose terminals.

1. Turn the ignition switch to ON (II).

2. Push the power switch OFF or turn the ignition switch to LOCK (0) to see if the navigation unit turns OFF.

   Is the navigation unit OFF?

   YES—Operation is normal. ■

   NO—Go to step 3.

3. Turn the ignition switch to LOCK (0).

4. Remove the navigation unit (see page 23-143).

   NOTE:
   - Eject all the discs before removing the navigation unit to prevent damaging the CD player's load mechanism.
   - Remove the PC card before removing the navigation unit.

5. Turn the ignition switch to LOCK (0).

(cont'd)

Symptom Troubleshooting (cont'd)

6. Measure the voltage between navigation unit connector A (17P) terminal No. 14 and body ground.

NAVIGATION UNIT CONNECTOR A (17P)

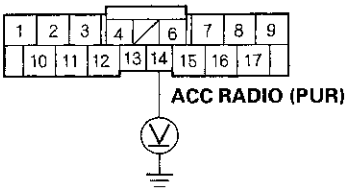

Wire side of female terminals

Is there battery voltage?

YES—Check for short to power on the PUR wire. ■

NO—Replace the navigation unit (see page 23-143). ■

Audio unit power switch will not turn off (without navigation)

NOTE:
- Check for aftermarket accessories plugged into the vehicle's accessory power sockets.
- Check the connectors for poor connections or loose terminals.

1. Turn the ignition switch to ON (II).
2. Push the power switch OFF or turn the ignition switch to LOCK (0) to see if the audio unit turns OFF.

   Is the audio unit OFF?

   YES—Operation is normal. ■

   NO—Go to step 3.
3. Turn the ignition switch to LOCK (0).
4. Remove the audio unit (see page 23-70).
5. Disconnect audio unit connector A (17P).

   NOTE: Eject all the discs before removing the audio unit to prevent damaging the CD player's load mechanism.
6. Measure the voltage between audio unit connector A (17P) terminal No. 14 and body ground.

AUDIO UNIT CONNECTOR A (17P)

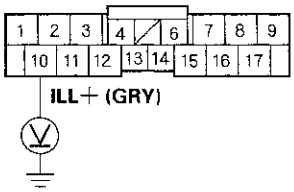

Wire side of female terminals

Is there voltage?

YES—Check for short to power on the PUR wire. ■

NO—Replace the audio unit (see page 23-70). ■

No sound is heard from the speaker(s) (display is normal) (with navigation)

NOTE:
- Check the vehicle battery condition first.
- Check the connectors for poor connections or loose terminals.
- Set the fader and balance positions to the center.
- Before performing symptom troubleshooting, do the power switch will not turn ON troubleshooting (see page 23-33).

1. Turn the ignition switch to ON (II).

2. Check for sound in each mode (AM, FM, XM, and CD).

   Is the sound OK in each mode?

   YES—Intermittent failure. The system is OK at this time. Check for loose connections at the navigation unit and speaker(s). ■

   NO—Go to step 3.

3. Check that the volume button is not set to the min level.

   Is it at the MIN level?

   YES—Raise the volume level, and recheck the function. ■

   NO—Go to step 4.

4. On the steering wheel, check the navigation talk command.

   Is the navigation talk command function set?

   YES—Cancel the navigation talk command by pressing the navigation BACK button, then recheck the function. ■

   NO—Go to step 5.

5. Check to see if there is a specific speaker that has no sound.

   Do any or all of the speakers fail to sound?

   YES—Speaker(s) failed the test:
   - If at least one speaker is OK, go to step 6.
   - If all speakers fail to sound, go to step 10.

   NO—Speakers all work, but sound quality is poor in step 1.
   - If sound is poor only with XM radio or the XM radio does not function, go to poor or no sound with XM radio (see page 23-63). ■
   - If the sound is poor only with AM or FM, go to poor AM or FM radio reception or interference (see page 23-26). ■
   - If the sound is poor only with disc. ■
     - Try several known-good disc in the navigation unit.
     - If the sound quality is normal, the original disc is faulty.
     - If the sound quality is still poor, replace the navigation unit.
   - If the sound is poor in all modes, go to sound quality diagnosis (see page 23-65). ■

6. Turn the ignition switch to LOCK (0).

7. Check the speaker(s) with no sound for any damage.

   Is there any damage?

   YES—Substitute the speaker (see page 23-72), and recheck. ■

   NO—Go to step 8.

8. Remove the speaker(s) with no sound (see page 23-72), and disconnect its connector.

9. Check the speaker 2P connector for a loose or poor connection.

   Reconnect the speaker 2P connector, and recheck the symptom; does it still fail?

   YES—Go to step 10.

   NO—Operation is normal. ■

10. Make sure the ignition switch is in LOCK (0).

(cont'd)

Symptom Troubleshooting (cont'd)

11. Measure the resistance between terminals No. 1 and No. 2 of the speaker connector.

    Is there about 4 Ω ?

    YES—Go to step 12.

    NO—Faulty speaker(s).■

12. Remove the navigation unit (see page 23-143). Disconnect navigation unit connector A (17P).

    NOTE:
    - Eject all the CDs before removing the navigation unit to prevent damaging the CD player's load mechanism.
    - Remove the PC card before removing the navigation unit.

13. Measure the resistance between following terminals of navigation unit connector A (17P) according to the table.

Speaker	Terminal	Wire color
Driver's door speaker	A12 (+)	LT GRN
	A3 (−)	PNK
Left tweeter	A12 (+)	LT GRN
	A3 (−)	PNK
Front passenger's door speaker	A15 (+)	GRY
	A7 (−)	BRN
Right tweeter	A15 (+)	GRY
	A7 (−)	BRN
Left rear speaker	A11 (+)	YEL
	A2 (−)	BRN
Right rear speaker	A16 (+)	BLU
	A8 (−)	ORN

NAVIGATION UNIT CONNECTOR A (17P)

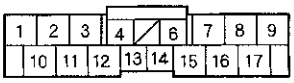

Wire side of female terminals

Is there about 4 Ω ?

YES—Go to step 14.

NO—Repair open or short in the wires between the navigation unit and the speaker.■

14. Check for continuity between body ground and the following terminals of navigation unit connector A (17P).

Speaker	Terminal	Wire color
Driver's door speaker	A12 (+)	LT GRN
	A3 (−)	PNK
Left tweeter	A12 (+)	LT GRN
	A3 (−)	PNK
Front passenger's door speaker	A15 (+)	GRY
	A7 (−)	BRN
Right tweeter	A15 (+)	GRY
	A7 (−)	BRN
Left rear speaker	A11 (+)	YEL
	A2 (−)	BRN
Right rear speaker	A16 (+)	BLU
	A8 (−)	ORN

NAVIGATION UNIT CONNECTOR A (17P)

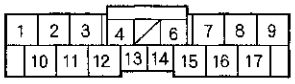

Wire side of female terminals

Is there continuity?

YES—Repair short to body ground in the wire(s) between the navigation unit and the speaker(s).■

NO—Substitute a known-good navigation unit (see page 23-143), and recheck. If the symptom/indication goes away, replace the original navigation unit.■

No sound is heard from the speaker(s) (display is normal) (without navigation)

NOTE:
- Check the vehicle battery condition first.
- Check the connectors for poor connections or loose terminals.
- Set the fader and balance positions to the center.
- Before doing symptom troubleshooting, do the audio unit power switch will not turn ON troubleshooting (see page 23-34).

1. Check for sound in each mode (AM, FM, and CD).

   Is the sound OK in each mode?

   YES—Intermittent failure, the system is OK at this time. Check for loose connections at the audio unit and speaker(s).■

   NO—Go to step 2.

2. Check that the volume button is not set to the MIN level.

   Is it at the MIN level?

   YES—Raise the volume level, and recheck the function.■

   NO—Go to step 3.

3. Check to see if there is a specific speaker that has no sound.

   Do any or all of the speakers fail to sound?

   YES—Speaker(s) failed the test:
   - If at least one speaker is OK, go to step 4.
   - If all speakers fail to sound, go to step 8.

   NO—Speakers all work, but sound quality is poor in step 1.
   - If the sound is poor only with AM or FM, go to poor AM or FM radio reception or interference (see page 23-30).■
   - If the sound is poor only with CD.■
     - Try several known- good discs in the audio unit.
     - If the sound quality is normal, the original disc is faulty.
     - If the sound quality is still poor, replace the audio unit.
   - If the sound is poor in all modes, go to sound quality diagnosis (see page 23-65).■

4. Turn the ignition switch to LOCK (0).

5. Check the speaker(s) with no sound for any damage.

   Is there any damage?

   YES—Substitute the speaker and recheck.■

   NO—Go to step 6.

6. Remove the speaker(s) with no sound (see page 23-72), and disconnect its connector.

7. Check the speaker 2P connector for a loose or poor connection.

   Reconnect the speaker 2P connector, and recheck the symptom; does it still fail?

   YES—Go to step 8.

   NO—Operation is normal.■

8. Make sure the ignition switch is in LOCK (0).

9. Measure the resistance between terminals No. 1 and No. 2 of the speaker connector.

   Is there about 4 Ω ?

   YES—Go to step 10.

   NO—Faulty speaker(s).■

10. Remove the audio unit (see page 23-70). Disconnect audio unit connector A (17P).

    NOTE: Eject all the discs before removing the audio unit to prevent damaging the CD player's load mechanism.

(cont'd)

Symptom Troubleshooting (cont'd)

11. Measure the resistance between the following terminals of audio unit connector A (17P) according to the table.

Speaker	Terminal	Wire color
Driver's door speaker	A12 (+)	LT GRN
	A3 (−)	PNK
Left tweeter	A12 (+)	LT GRN
	A3 (−)	PNK
Front passenger's door speaker	A15 (+)	GRY
	A7 (−)	BRN
Right tweeter	A15 (+)	GRY
	A7 (−)	BRN
Left rear speaker	A11 (+)	YEL
	A2 (−)	BRN
Right rear speaker	A16 (+)	BLU
	A8 (−)	ORN

AUDIO UNIT CONNECTOR A (17P)

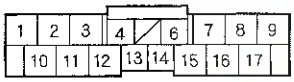

Wire side of female terminals

Is there about 4 Ω ?

YES—Go to step 12.

NO—Repair open or short in the wires between the audio unit and the speaker.■

12. Check for continuity between body ground and the following terminals of audio unit connector A (17P).

Speaker	Terminal	Wire color
Driver's door speaker	A12 (+)	LT GRN
	A3 (−)	PNK
Left tweeter	A12 (+)	LT GRN
	A3 (−)	PNK
Front passenger's door speaker	A15 (+)	GRY
	A7 (−)	BRN
Right tweeter	A15 (+)	GRY
	A7 (−)	BRN
Left rear speaker	A11 (+)	YEL
	A2 (−)	BRN
Right rear speaker	A16 (+)	BLU
	A8 (−)	ORN

AUDIO UNIT CONNECTOR A (17P)

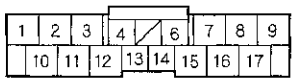

Wire side of female terminals

Is there continuity?

YES—Repair short to body ground in the wire(s) between the audio unit and the speaker.■

NO—Substitute a known-good audio unit (see page 23-70), and recheck. If the symptom/indication goes away, replace the original audio unit.■

Auxiliary input sound is low or cannot be heard

NOTE:
- Check the vehicle battery condition first.
- Check the connectors for poor connections or loose terminals.
- Use auxiliary stereo cables with 3.5 mm ends only.
- Auxiliary accessories may be played on the audio unit using the auxiliary input.

1. Turn the ignition switch to ON (II).

2. Turn on the audio unit or navigation unit, and connect an auxiliary accessory to the auxiliary input jack.

3. Check the volume operation.

   Is the sound normal?

   YES—Operation is normal at this time. ■

   NO—Go to step 4.

4. Make sure the auxiliary accessory volume is set to high.

   Is the volume set to high?

   YES—Go to step 5.

   NO—Raise the auxiliary accessory volume to max. Make sure the audio unit volume is turned down before retesting. ■

5. Substitute a known-good auxiliary audio accessory and/or auxiliary stereo cable, and recheck.

   Does the auxiliary audio accessory operate properly?

   YES—Original auxiliary audio accessory or auxiliary stereo cable is faulty. ■

   NO—Go to step 6.

6. Turn the ignition switch to LOCK (0).

7. Remove the auxiliary jack assembly (see page 23-74), and check that the auxiliary jack assembly is properly connected.

   Is the auxiliary jack assembly connected properly?

   YES—
   - With navigation: go to step 8.
   - Without navigation: go to step 13.

   NO—Reconnect the connector, and recheck the function. ■

8. Disconnect auxiliary jack assembly 5P connector.

9. Disconnect navigation unit connector B (22P).

10. Check for continuity between body ground and navigation unit connector B (22P) according to the table.

Navigation unit connector	Wire color
B1	BRN
B3	BLU
B11	YEL
B12	GRN
B13	WHT

NAVIGATION UNIT CONNECTOR B (22P)

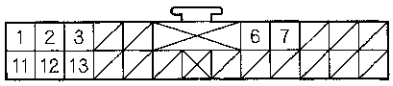

Wire side of female terminals

Is there continuity?

YES—Short to body ground in the wire(s) between the navigation unit and the auxiliary jack assembly. Replace the affected shielded harness. ■

NO—Go to step 11.

(cont'd)

Symptom Troubleshooting (cont'd)

11. Check for continuity between navigation unit connector B (22P) according to the table.

From terminal	To terminals
B1	B2*, B3, B11, B12, B13
B2*	B3, B11, B12, B13
B3	B11, B12, B13
B11	B12, B13
B12	B13

*: Shielded wire

NAVIGATION UNIT CONNECTOR B (22P)

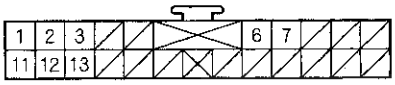

Wire side of female terminals

Is there continuity?

YES—Short in the wire(s) between the navigation unit and the auxiliary jack assembly. Replace the affected shielded harness.■

NO—Go to step 12.

12. Check for continuity between navigation unit connector B (22P) and auxiliary jack assembly 5P connector according to the table.

Navigation unit connector	Auxiliary jack assembly connector	Wire color
B1	3	BRN
B3	2	BLU
B11	4	YEL
B12	5	GRN
B13	1	WHT

NAVIGATION UNIT CONNECTOR B (22P)

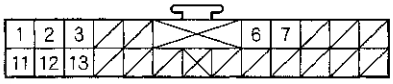

Wire side of female terminals

AUXILIARY JACK ASSEMBLY 5P CONNECTOR

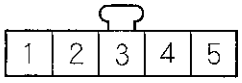

Wire side of female terminals

Is there continuity?

YES—Substitute a known-good auxiliary jack assembly (see page 23-74), and recheck. If the symptom/indication goes away, replace the original auxiliary jack assembly. If the symptom/indication is still present, replace the navigation unit (see page 23-143).■

NO—Open in the wire(s) between the navigation unit and the auxiliary jack assembly. Replace the affected shielded harness.■

13. Disconnect auxiliary jack assembly 5P connector.

14. Disconnect audio unit connector B (20P).

15. Check for continuity between body ground and audio unit connector B (20P) according to the table.

Audio unit connector	Wire color
B3	BRN
B5	BLU
B13	YEL
B14	GRN
B15	WHT

AUDIO UNIT CONNECTOR B (20P)

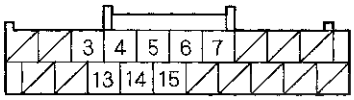

Wire side of female terminals

Is there continuity?

YES—Short to body ground in the wire(s) between the audio unit and the auxiliary jack assembly. Replace the affected shielded harness. ■

NO—Go to step 16.

16. Check for continuity between audio unit connector B (20P) according to the table.

From terminal	To terminals
B3	B4*, B5, B13, B14, B15
B4*	B5, B13, B14, B15
B5	B13, B14, B15
B13	B14, B15
B14	B15

*: Shielded wire

AUDIO UNIT CONNECTOR B (20P)

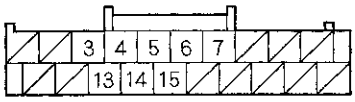

Wire side of female terminals

Is there continuity?

YES—Short in the wire(s) between the audio unit and the auxiliary jack assembly. Replace the affected shielded harness. ■

NO—Go to step 17.

(cont'd)

Symptom Troubleshooting (cont'd)

17. Check for continuity between audio unit connector B (20P) and auxiliary jack assembly 5P connector according to the table.

Audio unit connector	Auxiliary jack assembly connector	Wire color
B3	3	BRN
B5	2	BLU
B13	4	YEL
B14	5	GRN
B15	1	WHT

AUDIO UNIT CONNECTOR B (20P)

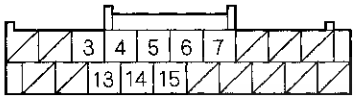

Wire side of female terminals

AUXILIARY JACK ASSEMBLY 5P CONNECTOR

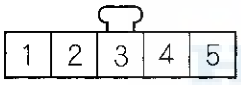

Wire side of female terminals

Is there continuity?

YES—Substitute a known-good auxiliary jack assembly (see page 23-74), and recheck. If the symptom/indication goes away, replace the original auxiliary jack assembly. If the symptom/indication is still present, replace the audio unit (see page 23-70).■

NO—Open in the wire(s) between the audio unit and the auxiliary jack assembly. Replace the affected shielded harness.■

Audio system sound is weak or distorted (display is normal)

NOTE:
- Check the vehicle battery condition first.
- Check the connectors for poor connections or loose terminals.

1. Check for sound in each mode (AM, FM, XM, and CD).

   Is there sound from the speakers, and is the sound quality normal in each mode?

   YES—Intermittent failure. The system is OK at this time. Check for loose connections at the navigation unit, audio unit, amplifier, and each speaker.■

   NO—Speakers all work, sound quality is poor.■

   - If the sound quality is poor only with the XM radio, or the XM radio does not function, go to poor or no sound with XM radio (see page 23-63).
   - If the sound quality is poor only with AM or FM radio, go to poor AM or FM radio reception or interference (see page 23-26).
   - If sound is poor in all modes, go to sound quality diagnosis (see page 23-65).

Radio preset memory is lost

NOTE: If only the XM stations are lost, go to XM radio preset memory is lost (see page 23-62).

1. Set each of the radio station preset buttons.

   Do each of the buttons set properly?

   YES—Go to step 2.

   NO—
   - With navigation: Replace the navigation unit (see page 23-143).■
   - Without navigation: Replace the audio unit (see page 23-70).■

2. Turn the ignition switch to LOCK (0) for 1 minute, then turn it back to ON (II).

3. Test the preset buttons for proper recall operation.

   Do the preset buttons recall the set radio stations?

   YES—System is normal at this time. Check the connections at the navigation unit or audio unit.■

   NO—
   - With navigation: Replace the navigation unit (see page 23-143).■
   - Without navigation: Replace the audio unit (see page 23-70).■

Volume does not change

NOTE:
- Check the vehicle battery condition first.
- Check the connectors for poor connections or loose terminals.
- Set the fader and balance positions to the center.

1. Listen for sound from the speakers.

   Is the sound normal?

   YES—Go to step 2.

   NO—Go to audio system sound is weak or distorted, or no sound is heard from speaker(s):■

   - With navigation (see page 23-37)
   - Without navigation (see page 23-39)

2. Operate the volume knob to see if the volume changes.

   Does the volume change?

   YES—Operation is normal.■

   NO—
   - With navigation: Replace the navigation unit (see page 23-143).■
   - Without navigation: Replace the audio unit (see page 23-70).■

Symptom Troubleshooting (cont'd)

Volume does not increase with speed (with navigation)

NOTE:
- Check the vehicle battery condition first.
- Check the connectors for poor connections or loose terminals.

1. Test-drive the vehicle at highway speeds, and monitor if the volume increases.

   Do the volume increase?

   YES—Intermittent failure, the system is OK at this time.■

   NO—Go to step 2.

2. Verify the SVC mode setting in the navigation unit sound set-up.

   Is the SVC set to off?

   YES—Change the setting to Mid, and retest (see page 23-6).■

   NO—Go to step 3.

3. Do the self-diagnostic function for the vehicle speed pulse indication (see page 23-21).

   Does the self-diagnostic function indicate a VSP signal?

   YES—Substitute a known-good navigation unit (see page 23-143), and retest. If the symptom/indication goes away, replace the original navigation unit.■

   NO—Go to step 4.

4. Remove the navigation unit (see page 23-143) and disconnect navigation unit connector A (17P).

   NOTE:
   - Eject all the discs before removing the navigation unit to prevent damaging the CD player's load mechanism.
   - Remove the PC card before removing the navigation unit.

5. Drive the vehicle, and have an assistant measure the voltage at navigation unit connector A (17P) terminal No. 13.

NAVIGATION UNIT CONNECTOR A (17P)

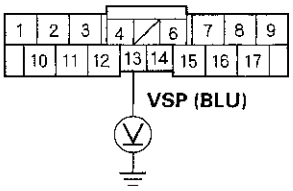

Wire side of female terminals

Is there a 0—5 V Pulse?

YES—Replace the navigation unit (see page 23-143).■

NO—Repair open or short in the wire between the navigation unit connector A (17P) terminal No. 13 and PCM connector A (44P) terminal No. 29. If no opens or shorts are found, update the PCM (see page 11-236) if it does not have the latest software or substitute a known-good PCM (see page 11-238).■

Volume does not increase with speed (without navigation)

NOTE:
- Check the vehicle battery condition first.
- Check the connectors for poor connections or loose terminals.

1. Test-drive the vehicle at highway speeds, and monitor if the volume increases.

   Do the volume increase?

   YES—Intermittent failure, the system is OK at this time. ■

   NO—Go to step 2.

2. Verify the SVC mode setting in the audio unit sound set-up.

   Is the SVC set to off?

   YES—Change the setting to Mid, and retest (see page 23-6). ■

   NO—Go to step 3.

3. Do the self-diagnostic function for the vehicle speed pulse indication (see page 23-21).

   Does the self-diagnostic function indicate a VSP signal?

   YES—Substitute a known-good audio unit, and retest. If the symptom/indication goes away, replace the original audio unit. ■

   NO—Go to step 4.

4. Remove the audio unit (see page 23-70) and disconnect audio unit connector A (17P).

   NOTE: Eject all the discs before removing the audio unit to prevent damaging the CD player's load mechanism.

5. Drive the vehicle, and have an assistant measure the voltage at audio unit connector A (17P) terminal No. 13.

AUDIO UNIT CONNECTOR A (17P)

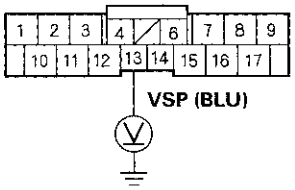

Wire side of female terminals

Is there a 0—5 V Pulse?

YES—Replace the audio unit (see page 23-70). ■

NO—Repair open or short in the wire between the audio unit connector A (17P) terminal No. 13 and ECM/PCM connector A (44P) terminal No. 29. If no opens or shorts are found, update the PCM (see page 11-236) if it does not have the latest software or substitute a known-good PCM (see page 11-238). ■

Symptom Troubleshooting (cont'd)

Volume is too high or too low when driving at freeway speeds

NOTE:
- Check the vehicle battery condition first.
- Check the connectors for poor connections or loose terminals.

1. Test-drive the vehicle at highway speeds and monitor volume level.

   Is the volume level too high, or too low?

   YES—Go to step 2.

   NO—Intermittent failure, the system is OK at this time.■

2. Change the SVC mode setting in sound set-up to Mid (see page 23-6).

   Is the volume level still too high, or too low?

   YES—
   - With navigation: Replace the navigation unit (see page 23-143).■
   - Without navigation: Replace the audio unit (see page 23-70).■

   NO—Improper SVC setting for customers sound taste.■

Radio tuner does not change stations

1. Check the audio information on the display panel.

   Does the audio information display properly?

   YES—Go to step 2.

   NO—Go to power switch will not turn on:■

   - With navigation (see page 23-33)
   - Without navigation (see page 23-34)

2. Operate the tuning knob to see if the radio station changes.

   Does the radio station change?

   YES—Intermittent failure, the tuning knob is OK at this time.■

   NO—
   - With navigation: Replace the navigation unit (see page 23-143).■
   - Without navigation: Replace the audio unit (see page 23-70).■

Navigation unit button illumination does not work (with navigation)

NOTE:
- Check the vehicle battery condition first.
- Check the connectors for poor connections or loose terminals.

1. Turn the ignition switch to ON (II).

2. Turn the combination lighting switch to the parking light position.

3. Check the illumination of the navigation unit buttons.

   Are the buttons illuminated?

   YES—Intermittent problem, the navigation unit is OK at this time. Check for loose or poor connections at navigation unit connector A (17P).■

   NO—Go to step 4.

4. Check the illumination of several other buttons not related to the navigation system.

   Are the buttons illuminated?

   YES—Go to step 5.

   NO—Troubleshoot the interior lights. Start by checking the No. 14 (7.5 A) fuse in the under-dash fuse/relay box. If the fuse is OK, check for an open in the wire between the under-dash fuse/relay box and the navigation unit.■

5. Turn the ignition switch to LOCK (0).

6. Disconnect navigation unit connector A (17P).

   NOTE:
   - Eject all the discs before removing the navigation unit to prevent damaging the CD player's load mechanism.
   - Remove the PC card before removing the navigation unit.

7. Disconnect gauge control module (tach) 36P connector.

8. Check for continuity between navigation unit connector A (17P) terminal No. 1 and gauge control module (tach) 36P connector terminal No. 14.

NAVIGATION UNIT CONNECTOR A (17P)
Wire side of female terminals

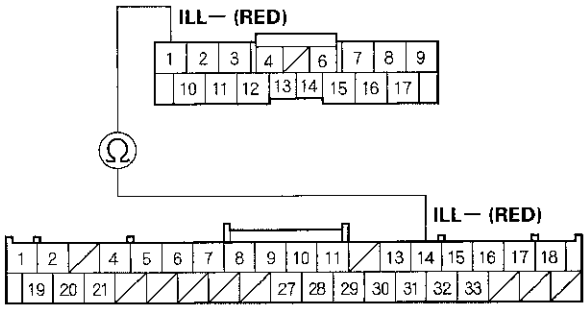

GAUGE CONTROL MODULE (TACH) 36P CONNECTOR
Wire side of female terminals

Is there continuity?

YES—Go to step 9.

NO—Repair open in the wire between the gauge control module and the navigation unit.■

9. Turn the ignition switch to ON (II).

10. With the headlight switch still on, measure the voltage between navigation unit connector A (17P) terminal No. 10 and body ground.

NAVIGATION UNIT CONNECTOR A (17P)

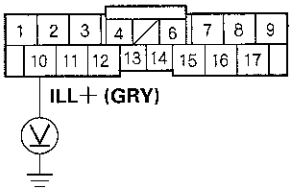

Wire side of female terminals

Is there battery voltage?

YES—Check the connections at navigation unit connector A (17P). If all connections are OK, replace the navigation unit (see page 23-143).■

NO—Repair open in the wire between the under-dash fuse/relay box and the navigation unit.■

Symptom Troubleshooting (cont'd)

Audio unit button illumination does not work (without navigation)

NOTE:
- Check the vehicle battery condition first.
- Check the connectors for poor connections or loose terminals.

1. Turn the ignition switch to ON (II).

2. Turn the combination lighting switch to the parking light position.

3. Check the illumination of the audio unit buttons.

   Are the buttons illuminated?

   YES—Intermittent problem, the audio unit is OK at this time. Check for loose or poor connections at the audio unit connector A (17P). ■

   NO—Go to step 4.

4. Check the illumination of several other buttons not related to the audio system.

   Are the buttons illuminated?

   YES—Go to step 5.

   NO—Troubleshoot the interior lights. Start by checking the No. 14 (7.5 A) fuse in the under-dash fuse/relay box. If the fuse is OK, check for an open in the wire between the under-dash fuse/relay box and the audio unit. ■

5. Turn the ignition switch to LOCK (0).

6. Disconnect audio unit connector A (17P).

   NOTE: Eject all the discs before removing the audio unit to prevent damaging the CD player's load mechanism.

7. Disconnect gauge control module (tach) 36P connector.

8. Check for continuity between audio unit connector A (17P) terminal No. 1 and gauge control module (tach) 36P connector terminal No. 14.

AUDIO UNIT CONNECTOR A (17P)
Wire side of female terminals

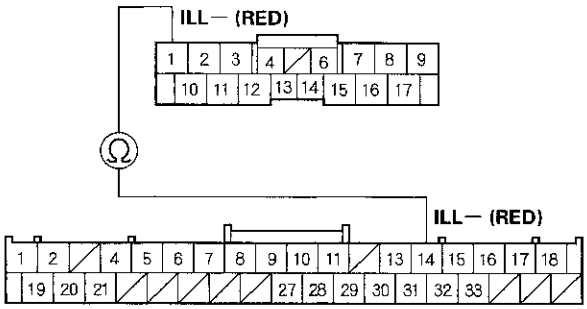

GAUGE CONTROL MODULE (TACH) 36P CONNECTOR
Wire side of female terminals

Is there continuity?

YES—Go to step 9.

NO—Repair open in the wire between the gauge control module and the audio unit. ■

9. Turn the ignition switch to ON (II).

10. With the headlight switch still on, measure the voltage between audio unit connector A (17P) terminal No. 10 and body ground.

AUDIO UNIT CONNECTOR A (17P)

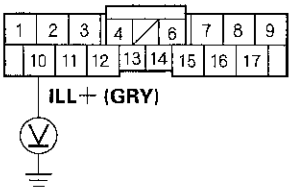

Wire side of female terminals

Is there battery voltage?

YES—Check the connections at audio unit connector A (17P). If all the connections are OK, replace the audio unit (see page 23-70). ■

NO—Repair open in the wire between the under-dash fuse/relay box and the audio unit. ■

Display does not dim or brighten with dimmer (without navigation)

NOTE:
- Check the vehicle battery condition first.
- Check the connectors for poor connections or loose terminals.
- If the vehicle is equipped with navigation, refer to the Display day/night mode does not work (see page 23-116).

1. Turn the ignition switch to ON (II).

2. Turn the combination light switch ON and OFF to see if the symptom can be duplicated.

   Is it duplicated?

   YES—Go to step 3.

   NO—Operation is normal.

3. Turn the combination light switch to OFF.

4. Rotate the illumination control dial.

   Does the illumination dim and brighten normally as you rotate the dial?

   YES—Operation is normal.

   NO—Go to step 5.

5. Disconnect, and check audio unit connector A (17P) for a loose or a poor connection. ■

   NOTE: Eject all the discs before removing the audio unit to prevent damaging the CD player's load mechanism.

   Reconnect audio unit connector A (17P) and recheck the symptom; does it still appear?

   YES—Go to step 6.

   NO—Operation is normal. ■

6. Turn the ignition switch to LOCK (0).

7. Remove the audio unit (see page 23-70).

8. Turn the ignition switch to ON (II).

9. Measure the voltage between audio unit connector A (17P) terminals No. 1 and No. 10. Rotate the dash brightness controller buttons to see if the voltage changes.

AUDIO UNIT CONNECTOR A (17P)

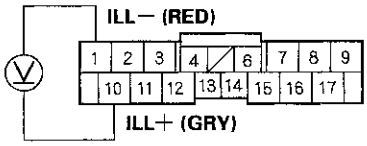

Wire side of female terminals

Does the voltage change?

YES—Substitute a known-good audio unit (see page 23-70), and recheck. If the symptom/indication goes away, replace the original audio unit. If symptom is still present, substitute a known-good center panel display, and recheck. If the symptom/indication goes away, replace the original center panel display (see page 23-70). ■

NO—Repair open in the wire between the under-dash fuse/relay box and the gauge control module. ■

Symptom Troubleshooting (cont'd)

Audio disc does not load

NOTE:
- Check the vehicle battery condition first.
- Check the connectors for poor connections or loose terminals.
- Disc labels should not be used in the navigation unit or the audio unit. They may damage the player mechanism.
- Make sure the disc is compatible with the system (see the owner's manual for more information).

1. Insert a known-good disc to see if the symptom can be duplicated.

   Does the disc load?

   YES—Operation is normal. If the disc loads normally, but will not play, go to audio disc does not play (see page 23-53). ■

   NO—Go to step 2.

2. Insert another disc.

   Does the disc load?

   YES—The original disc is faulty. ■

   NO—
   - With navigation: Replace the navigation unit (see page 23-143). ■
   - Without navigation: Replace the audio unit (see page 23-70). ■

Audio disc does not eject

NOTE:
- Check the vehicle battery condition first.
- Check the connectors for poor connections or loose terminals.
- Disc labels should not be used in the navigation unit or audio unit. They may damage the player mechanism.

1. Turn on the audio system.

   Does the system turn on?

   YES—Go to step 2.

   NO—Go to power switch will not turn ON:

   - With navigation (see page 23-33). ■
   - Without navigation (see page 23-34). ■

2. Check to see if the disc ejects correctly with no binding by pushing the EJECT button.

   Does the disc eject normally?

   YES—Operation is normal. ■

   NO—
   - With navigation: Replace the navigation unit (see page 23-143). ■
   - Without navigation: Replace the audio unit (see page 23-70). ■

Special Tools Required
Diagnostics CD 07AAZ-SDBA100

Audio disc does not play

NOTE:
- Check the vehicle battery condition first.
- Check the connectors for poor connections or loose terminals.

1. Try loading a known-good disc.

   Does the disc load?

   YES—Go to step 2.

   NO—Go to audio disc does not load (see page 23-52). ■

2. Insert the audio diagnostic CD (T/N: 07AAZ-SDBA100) in the navigation unit or audio unit.

   Does the disc play?

   YES—The original disc is faulty, or has an unreadable format. ■

   NO—
   - With navigation: Replace the navigation unit (see page 23-143). ■
   - Without navigation: Replace the audio unit (see page 23-70). ■

Special Tools Required
- Diagnostics CD 07AAZ-SDBA100
- Skip Test CD 07AAZ-SDBA200
- Skip Test CD 07AAZ-SDBA300

Audio disc skips

1. Confirm the vehicles tires are properly inflated.

2. Check the customers CD for scratches, fingerprints, and marks.

   NOTE: Do the following test with audio unit bass and treble set to customers listening performance. When comparing to known-good vehicles, comparison should be performed on same model and trim level.

3. Test drive to identify when the CD skips. The audio diagnostic CD (T/N: 07AAZ-SDBA100) can be used if customers CD is not available. Use tracks 10 to 12.

   Does the CD skip?

   YES—Go to step 4.

   NO—Operation is normal. ■

4. Compare the customers CD that skips in a known-good vehicle under the same conditions.

   Does the CD skip in the known-good vehicle under the same conditions?

   YES—Operation is normal. ■

   NO—Go to step 5.

   NOTE: Do the following test with vehicle parked and engine running.

(cont'd)

Symptom Troubleshooting (cont'd)

5. Insert the diagnostic skip test CD (T/N: 07AAZ-SDBA300) (ABEX TCD 721). Play tracks 2 to 11 and note the track number(s) where the CD starts skipping. Do the same test on a known-good vehicle.

   Does the CD skip on the same track number(s) as the known-good vehicle?

   YES—Operation is normal. ■

   NO—Go to step 6.

6. Insert the diagnostic skip test CD (T/N: 07AAZ-SDBA200) (ABEX TCD 725B) play tracks 7 to 11 and tracks 13 to 15, and note the track number(s) where the CD starts skipping. Perform the same test on a known-good vehicle.

   Does the CD skip on same track number(s) as the known-good vehicle?

   YES—Operation is normal. ■

   NO—
   - With navigation: Replace the navigation unit (see page 23-143). ■
   - Without navigation: Replace the audio unit (see page 23-70). ■

Audio remote switch does not work properly (with navigation)

NOTE:
- Check the vehicle battery condition first.
- Check the connectors for poor connections or loose terminals.

1. Check the audio unit operation.

   Is the audio unit operation OK?

   YES—Go to step 2.

   NO—Replace the navigation unit (see page 23-143). ■

2. Test the audio remote switch (see page 23-74).

   Is the audio remote switch OK?

   YES—Go to step 3.

   NO—Replace the audio remote switch. ■

3. Remove the navigation unit (see page 23-143).

4. Measure the resistance between navigation unit connector B (22P) terminals No. 6 and No. 7 as specified in the table.

NAVIGATION UNIT CONNECTOR B (22P)

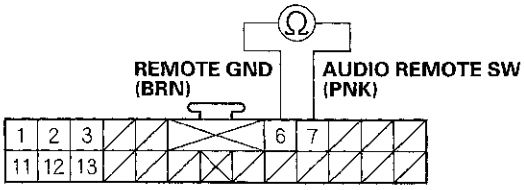

Wire side of female terminals

AUDIO REMOTE SWITCH TABLE

Button held down	VOL DOWN	VOL UP	CH (−)	CH (+)	MODE	No button pressed
Resistance	about 100 Ω	about 357 Ω	about 775 Ω	about 1.7 kΩ	about 3.7 kΩ	about 10 kΩ

Is the resistance OK?

YES—Go to step 5.

NO—Repair open or high resistance in the circuit between the navigation unit and the audio remote switch. If the wires are OK, replace the cable reel (see page 24-196). ■

5. Check for continuity between navigation unit connector B (22P) terminals No. 6 and No. 7 and body ground individually.

NAVIGATION UNIT CONNECTOR B (22P)

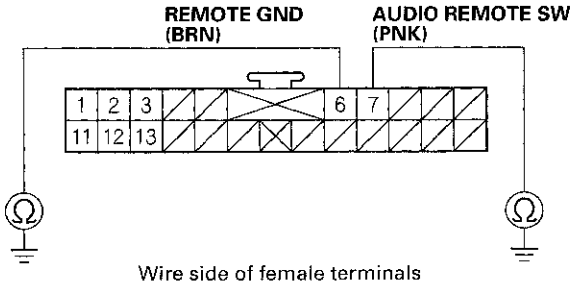

Wire side of female terminals

Is there continuity?

YES—Repair short to body ground in the circuit between the navigation unit and the audio remote switch. If the wires are OK, replace the cable reel (see page 24-196). ■

NO—Replace the navigation unit (see page 23-143). ■

Symptom Troubleshooting (cont'd)

Audio remote switch does not work properly (without navigation)

NOTE:
- Check the vehicle battery condition first.
- Check the connectors for poor connections or loose terminals.

1. Check the audio unit operation.

   Is the audio unit operation OK?

   YES—Go to step 2.

   NO—Replace the audio unit (see page 23-70). ■

2. Test the audio remote switch (see page 23-74).

   Is the audio remote switch OK?

   YES—Go to step 3.

   NO—Replace the audio remote switch. ■

3. Remove the audio unit (see page 23-70).

4. Measure the resistance between audio unit connector B (20P) terminals No. 6 and No. 7 as specified in the table.

AUDIO UNIT CONNECTOR B (20P)

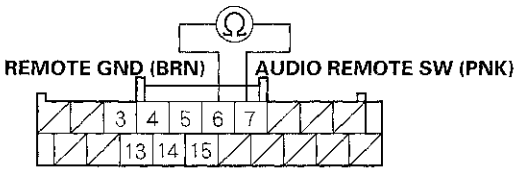

Wire side of female terminals

AUDIO REMOTE SWITCH TABLE

Button held down	VOL DOWN	VOL UP	CH (−)	CH (+)	MODE	No button pressed
Resistance	about 100 Ω	about 357 Ω	about 775 Ω	about 1.7 kΩ	about 3.7 kΩ	about 10 kΩ

Is the resistance OK?

YES—Go to step 5.

NO—Repair open or high resistance in the circuit between the audio unit and the audio remote switch. If the wires are OK, replace the cable reel (see page 24-196). ■

5. Check for continuity between audio unit connector B (20P) terminals No. 6 and No. 7 and body ground individually.

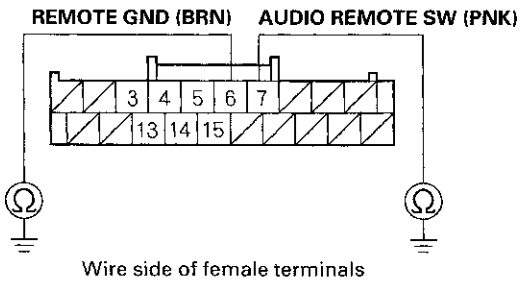

Is there continuity?

YES—Repair short to body ground in the circuit between audio unit and the audio remote switch. If the wires are OK, replace the cable reel (see page 24-196). ■

NO—Replace the audio unit (see page 23-70). ■

Audio disc cannot be inserted and/or ejected (with navigation)

NOTE:
- Check the vehicle battery condition first.
- Check the connectors for poor connections or loose terminals.
- Disc labels should not be used in the navigation unit or audio unit. They may damage the player mechanism.
- Make sure the disc is compatible with the system (see the owner's manual for more information).

1. Press the OPEN/CLOSE button to open the navigation display.

2. Try inserting an audio CD.

   Does the player accept the CD?

   YES—The system is OK at this time. ■

   NO—Go to step 3.

3. Press the CD eject button.

   Does the player eject the CD?

   YES—The system is OK at this time. ■

   NO—Replace the navigation unit (see page 23-143). ■

Symptom Troubleshooting (cont'd)

PC card will not play/card icon on audio screen cannot be selected (with navigation)

Unfortunately there are no error messages, and no diagnostics for the PC card. There are many reasons why a card won't play audio files in the audio unit.

- The card may not be fully inserted into the slot. Eject the card, and inspect for warping or damage to the edge connector. Never use excessive force to insert a card. This can result in damage to the pins in the rear of the slot.
- The customer's card may contain audio files that are not recognized by the system. Only MP3, and WMA music files are played.
- The flash card type may not be accepted by the system. Only Compact Flash and ATA cards have been tested.
- The card's PCMCIA adaptor may be preventing a known-good card from playing. New PCMCIA adaptors are constantly being released, and have not been tested.
- The card's capacity may exceed 1 GB. Only cards with capacities of up to 1 GB (1000 MB) have been tested.
- There may not be any files on the card. Some cards have write protection, make sure it is turned off before putting files on the card.
- Although flash memory chips are reliable, occasionally they develop bad sectors or other formatting errors that prevents them from playing. The customer should re-format the card using the FAT, or FAT32 format.
- The card may have been damaged by heat. Suggest that the customer remove their card when exiting the vehicle.
- The customer may have formatted the card using the format NTFS. Only the formats FAT, and FAT32 are accepted by the system.
- Hard Disc Drive (HDD) cards may not work properly in the system and can overheat and quit functioning, particularly in a hot vehicle. They are not recommended.
- The filing structure of the card may exceed the specification of 8 folder levels deep, 99 folders maximum, and 999 total tracks maximum. If any of these limitations is exceeded, the system may not properly display or play the tracks.

NOTE: A delay when first inserting a card is normal. The system is reading the File Tag information for album names, artist, and song titles and there is no hour glass, The delay length depends on the number of tracks, and the complexity of the folder structure. See the audio section glossary for an explanation of the terms used above.

Error code: XM NO SIGNAL or XM ANTENNA is displayed (with navigation)

NOTE:
- Check the vehicle battery condition first.
- Check the connectors for poor connections or loose terminals.
- Check XM radio reception in an open area. Poor reception/interference can be caused by tall buildings, mountains, or high-voltage power lines.

1. Check that the XM receiver connectors properly connected.

   Is the connector connected?

   YES—Go to step 2.

   NO—Reconnect the connector. If the error message does not go away, go to step 2.

2. Check the connector at the XM antenna and XM antenna lead.

   Is the connector connected?

   YES—Go to step 3.

   NO—Reconnect the connector. If the error message does not go away, go to step 3.

3. Substitute known-good XM antenna (see page 23-76).

   Is the error message gone?

   YES—Replace the XM antenna (see page 23-76). ■

   NO—Go to step 4.

4. Substitute known-good XM receiver (see page 23-72).

   Is the error message gone?

   YES—Replace the XM receiver (see page 23-72). ■

   NO—Replace the XM antenna lead. ■

XM radio display is blank and no station information is displayed (with navigation)

NOTE:
- Check the vehicle battery condition first.
- Check the connectors for poor connections or loose terminals.

1. Disconnect XM receiver connector A (14P).

2. Measure the voltage between XM receiver connector A (14P) terminal No. 1 and body ground.

XM RECEIVER CONNECTOR A (14P)

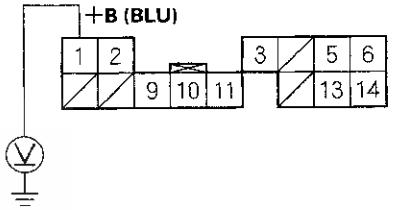

Wire side of female terminals

Is there battery voltage?

YES—Go to step 3.

NO—Repair open in the wire between the XM receiver and the navigation unit connector. ■

(cont'd)

Symptom Troubleshooting (cont'd)

3. Reconnect XM receiver connector A (14P).

4. Turn the ignition switch to ON (II).

5. Measure the voltage between XM receiver connector A (14P) terminal No. 11 and body ground.

XM RECEIVER CONNECTOR A (14P)

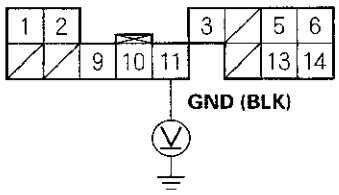

Wire side of female terminals

Is there less than 0.1 V?

YES—Go to step 6.

NO—Repair open in the wire between the XM receiver and the navigation unit.■

6. Turn the ignition switch to LOCK (0).

7. Measure the voltage between XM receiver connector A (14P) terminal No. 2 and body ground.

XM RECEIVER CONNECTOR A (14P)

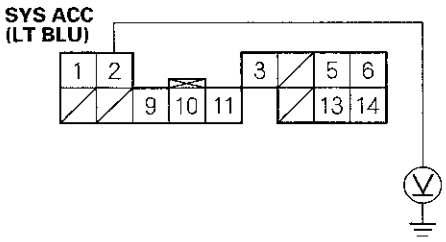

Wire side of female terminals

Is there 10 V or more present?

YES—Go to step 8.

NO—Substitute a known-good XM receiver (see page 23-72), and recheck. If 10 V or more are present, replace the original XM receiver.■

8. Turn the ignition switch to ON (II).

9. Measure the voltage between XM receiver connector A (14P) terminal No. 2 and body ground.

XM RECEIVER CONNECTOR A (14P)

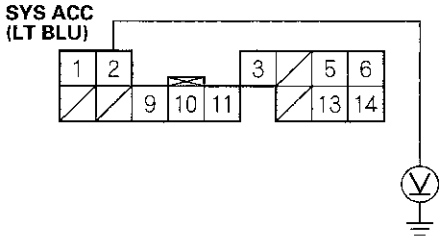

Wire side of female terminals

Is there less than 0.5 V?

YES—Go to step 10.

NO—Substitute a known-good navigation unit (see page 23-143), and recheck. If 0.5 V or less are present, replace the original navigation unit.■

10. Turn the ignition switch to LOCK (0).

11. Disconnect navigation unit connector E (14P), and XM receiver connector A (14P).

12. Check for continuity between navigation unit connector E (14P) terminals No. 9 and No. 10 and body ground individually.

NAVIGATION UNIT CONNECTOR E

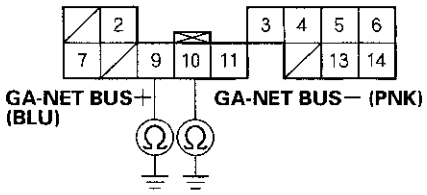

Wire side of female terminals

Is there continuity?

YES—Go to step 13.

NO—Short to body ground in the wire between the XM receiver and the navigation unit. Replace the affected shielded harness.■

13. Check for continuity between XM receiver connector A (14P) according to the table.

From terminal	To terminals
A3 (BRN)	A9 (BLU), A10 (PNK)
A9 (BLU)	A10 (PNK)

XM RECEIVER CONNECTOR A (14P)

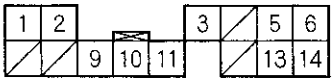

Wire side of female terminals

Is there continuity between any of the terminals?

YES—Short in the wire(s) between the navigation unit and the XM receiver. Replace the affected shielded harness.■

NO—Go to step 14.

14. Check for continuity between navigation unit connector E (14P) and XM receiver connector A (14P) according to the table.

Navigation unit connector	XM receiver connector	Wire color
E9	A9	BLU
E10	A10	PNK

NAVIGATION UNIT CONNECTOR E (14P)

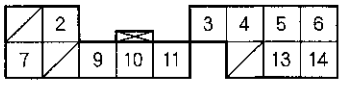

Wire side of female terminals

XM RECEIVER CONNECTOR A (14P)

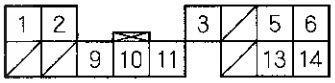

Wire side of female terminals

Is there continuity?

YES—Substitute a known-good XM receiver (see page 23-72), then reconnect all connectors and recheck. If the symptom/indication goes away, replace the original XM receiver. If symptom/indication is still present, replace the navigation unit (see page 23-143).■

NO—Open in the wire(s) between the navigation unit and the XM receiver. Replace the affected shielded harness.■

Symptom Troubleshooting (cont'd)

XM radio preset memory is lost (with navigation)

NOTE:
- Check the vehicle battery condition first.
- Check the connectors for poor connections or loose terminals.
- If you can only tune to channel 000, 001, 174, and 247, make sure the navigation unit is set to channel mode (see owner's manual), if it is set to channel mode, call XM Satellite Radio customer support, and check the account activation status.

1. Turn the ignition switch to ON (II).

2. Turn on the navigation unit and set each of the XM radio channel preset buttons.

   Do each of the XM radio channel preset buttons set properly?

   YES—Go to step 3.

   NO—Go to step 7.

3. Turn the ignition switch to LOCK (0) for 1 minute, then turn it back to ON (II).

4. Test all of the XM radio channel preset buttons for proper recall operation.

   Do the preset buttons recall the set radio stations?

   YES—System is normal at this time. Check connections at the navigation unit.■

   NO—Go to step 5.

5. Turn the ignition switch to LOCK (0).

6. Disconnect XM receiver connector A (14P).

7. Measure the voltage between XM receiver connector A (14P) terminal No. 1 and body ground.

XM RECEIVER CONNECTOR A (14P)

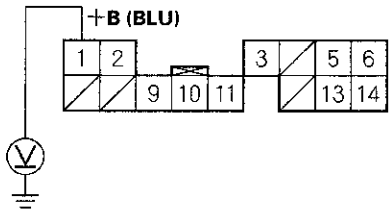

Wire side of female terminals

Is there battery voltage?

YES—Go to step 8.

NO—Repair open in the wire between the navigation unit and the XM receiver.■

8. Reconnect XM receiver connector A (14P).

9. Turn the ignition switch to ON (II).

10. Measure the voltage between XM receiver connector A (14P) terminal No. 11 and body ground.

XM RECEIVER CONNECTOR A (14P)

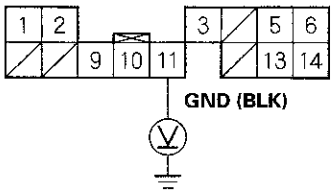

Wire side of female terminals

Is there less than 0.1 V?

YES—Substitute a known-good navigation unit (see page 23-143), and recheck. If the symptom/indication goes away, replace the navigation unit.■

NO—Repair open in the wire between the XM receiver connector and the navigation unit.■

Poor or no sound with XM radio (Navigation unit does display XM channels) (with navigation)

NOTE:
- Check the vehicle battery condition first.
- Check the XM radio reception in an open area. Poor reception/interference can be caused by nearby tall buildings, mountains, or high-voltage power lines.
- Check the connectors for poor connections or loose terminals.
- If you can only tune to channel 000, 001, 174, and 247, make sure the navigation unit is set to channel mode (see owners manual), if it is set to channel mode, call XM Satellite Radio customer support and check the account activation status.

1. Turn the ignition switch to ON (II).

2. Turn on the navigation unit and select XM radio.

3. Check for an error message on the display.

   Are there any messages displayed?

   YES—Go to error code list (see page 23-24). ■

   NO—Go to step 4.

4. Turn the ignition switch to LOCK (0).

5. Disconnect navigation unit connector E (14P) and XM receiver connector A (14P).

6. Check for continuity between XM receiver connector A (14P) and body ground according to the table.

XM receiver connector	Wire color
A5	WHT
A6	RED
A13	BLK
A14	GRN

XM RECEIVER CONNECTOR A (14P)

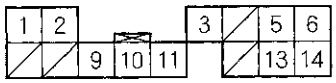

Wire side of female terminals

Is there continuity?

YES—Short to body ground in the wire(s) between the navigation unit and the XM receiver. Replace the affected shielded harness. ■

NO—Go to step 7.

(cont'd)

Symptom Troubleshooting (cont'd)

7. Check for continuity between terminals of XM receiver connector A (14P) according to the table.

From terminal	To terminals
A4 (GRY)	A5 (WHT), A6 (RED), A13 (BLK), A14 (GRN)
A5 (WHT)	A6 (RED), A13 (BLK), A14 (GRN)
A6 (RED)	A13 (BLK), A14 (GRN)
A13 (BLK)	A14 (GRN)

XM RECEIVER CONNECTOR A (14P)

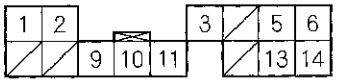

Wire side of female terminals

Is there continuity between any of the terminals?

YES—Short in the wires between the navigation unit and the XM receiver. Replace the affected shielded harness.■

NO—Go to step 8.

8. Check for continuity between navigation unit connector E (14P) and XM receiver connector A (14P) according to the table.

Navigation unit connector	XM receiver connector	Wire color
E5	A5	WHT
E6	A6	RED
E13	A13	BLK
E14	A14	GRN

NAVIGATION UNIT CONNECTOR E (14P)

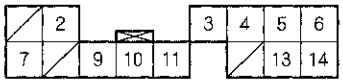

Wire side of female terminals

XM RECEIVER CONNECTOR A (14P)

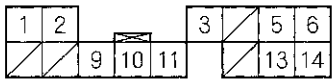

Wire side of female terminals

Is there continuity?

YES—Substitute a known-good XM receiver (see page 23-72), then reconnect all of the connectors and recheck. If the symptom/indication goes away, replace the original XM receiver. If the symptom/indication is still present, replace the navigation unit (see page 23-143).■

NO—Open in the wire(s) between navigation unit and the XM receiver. Replace the affected shielded harness.■

Sound Quality Diagnosis

Special Tools Required
Diagnostics CD 07AAZ-SDBA100

Use the following tests to check sound quality.

NOTE: Before beginning the following tests, write down the bass, treble, fader and balance settings, and then set them to their center positions for testing.

Left/Right Channel ID

Do this test to confirm proper channel routing.

1. Insert the audio diagnostic CD (T/N 07AAZ-SDBA100) into the navigation unit or audio unit.

2. Play track No. 1 (left, both, right channel ID) at a normal, or slightly higher than normal, volume level.

3. The voice should be audible only from the channel or channels when indicated.

   - If the channel ID is correct for each side, go to the phase test.
   - If the channel ID is not correct, check for;
     - Shorted speaker wire
     - Faulty navigation unit
     - Faulty audio unit

Special Tools Required
Diagnostics CD 07AAZ-SDBA100

Phase Test

Do this test to confirm proper speaker phasing.

1. Insert the audio diagnostic CD (T/N 07AAZ-SDBA100) into the navigation unit or audio unit.

2. Play track No. 2 (phase) at a normal, or slightly higher than normal, volume level.

3. The voice should sound centered and focused when it is in-phase.

4. The voice should sound diffused, and have less bass when it is out of phase.

   - If the voice changes from in-phase to out of phase as indicated by the prompt, the phasing is correct. Go to electrical noise test.
   - If the voice always sounds out of phase, phasing is not correct. Check for;
     - Crossed speaker wires
     - Faulty navigation unit
     - Faulty audio unit

HONDA

Sound Quality Diagnosis (cont'd)

Special Tools Required
Diagnostics CD 07AAZ-SDBA100

Electrical Noise Test

Do this test to check for electrical noise being induced into the audio system.

NOTE: Electrical noise may be caused by outside sources that cannot be handled by the audio system. Make sure you remove any cell phones and/or turn off any aftermarket device before beginning this test.

1. Insert the audio diagnostic CD (T/N 07AAZ-SDBA100) into the navigation unit or audio unit.

2. Play track No. 4 (digital zero) at a normal, or slightly higher than normal, volume level.

3. Operate any electrical device that may create electrical noise in the audio system, including starting the engine.

4. Play track No. 5 (near digital zero) at a normal, or slightly higher than normal, volume level.

5. Operate any electrical device that may create electrical noise in the audio system, including starting the engine.

6. Play track No. 6 (SNR) at a normal, or slightly higher than normal, volume level.

7. Operate any electrical device that may create electrical noise in the audio system, including starting the engine.

   - If no abnormal noise is heard, go to individual speaker test.
   - If the noise is present only during the SNR track, replace the navigation unit or audio unit.
   - If the noise is heard during the digital zero or near digital zero track, check for;
     - Poor ground for the audio unit, engine or battery cable
     - Pinched or shorted speaker wire
     - Faulty navigation unit
     - Faulty audio unit
     - Other faulty components causing excessive electrical noise (ignition coils, alternator, door lock actuators, etc.). Disconnect any suspect components, and then replay the tracks that were originally noisy. If the noise is gone, check the component's circuit and the component.

Special Tools Required
Diagnostics CD 07AAZ-SDBA100

Individual Speaker Test

Do this test to identify a faulty speaker.

1. Insert the audio diagnostic CD (T/N 07AAZ-SDBA100) into the navigation unit or audio unit.

2. Play track No. 30 (steady 300 Hz tone) at a normal, or slightly higher than normal, volume level.

3. Listen to each speaker for poor sound compared to the other speakers. Use the audio unit's fader and balance settings to help isolate the channel with the problem.

   - If the sound quality produced by a specific speaker is poor, substitute it with a known-good speaker. If the poor sound quality continues, go to the sound balance test.
   - If the sound quality is OK, go to the sound balance test.

Special Tools Required
Diagnostics CD 07AAZ-SDBA100

Sound Balance Test

Perform this test to identify a faulty channel or speaker.

1. Insert the audio diagnostic CD (T/N 07AAZ-SDBA100) into the navigation unit or audio unit.

2. Confirm the bass and treble are set to the center positions.

3. Play track No. 3 (pink noise) at a normal, or slightly higher then normal, volume level.

4. A static type sound should be heard through all speakers.

5. Insert the audio diagnostic CD (T/N 07AAZ-SDBA100) into the navigation unit or audio unit of a known-good vehicle.

6. Set the bass and treble to the center position.

7. Play track No. 3 (pink noise) all the same level as was played in step 3.

8. Compare the sounds made by the two vehicles.

   - If the sounds made by the two vehicles are very similar, go to the Frequency Sweep Test (see page 23-68).
   - If the sound does not have as much bass.
   - If the sound does not have enough hiss, check the tweeters and their circuits.

Sound Quality Diagnosis (cont'd)

Special Tools Required
Diagnostics CD 07AAZ-SDBA100

Frequency Sweep

Do this test to find rattles or reverberations that may cause a perception of poor sound quality.

1. Insert the audio diagnostic CD (T/N 07AAZ-SDBA100) into the navigation unit or audio unit.

2. Play track No. 13 (sweep from 500 Hz to 35 Hz) at a normal, or slightly higher than normal, volume level.

3. Listen to each speaker for poor sound quality or reverberations caused by specific frequencies. Use the voice-over to estimate the frequency that causes the vibration. Use the audio unit's fader and balance settings to help isolate the channel with the problem.

   - If vibrations or poor sound quality are heard, go to step 4.
   - If no vibrations or poor sound quality are heard, go to sound judging.

4. Choose the appropriate track from No. 14 to 25 (small range frequency sweep) or 26 to 53 (single frequencies) to recreate the frequency that caused the poor sound quality or vibration located in step 3; this aids in diagnosis of the cause.

   NOTE: When you get to the track that recreates the problem, select the repeat function on the navigation unit or audio unit; this will help you isolate the cause.

5. Replace or insulate the source of the vibrations or, if the speaker is the source of the poor sound quality, replace it.

Special Tools Required
Diagnostics CD 07AAZ-SDBA100

Sound Judging

- Do this test to compare overall sound quality, imaging, and dynamics between the customer's vehicle and a known-good vehicle. Only use a vehicle of the same model and trim level for this test.
- Make sure the vehicle is using only OEM speakers.

1. In the customer vehicle, set the bass, treble, fader, and balance settings to the customer's normal settings that were written down before beginning testing.

2. Insert the audio diagnostic CD (T/N 07AAZ-SDBA100) into the navigation unit or audio unit.

3. Play tracks No. 7 to 12 (sound quality, midland, dynamics, and imaging demonstration tracks) at a normal, or slightly higher than normal, volume level. Write down the volume setting being used.

4. Listen to areas of the track that stand out as being either very clear or poorer than other areas of the track.

5. Insert the audio diagnostic CD (T/N 07AAZ-SDBA100) into the navigation unit or audio unit of a known-good vehicle.

6. Play the tracks at the same volume level and the same bass, treble, balance, and fader settings as used in step 3 in the customer's vehicle.

7. Listen to the same area of the track that stood out as being either very clear or poorer than other areas of the track.

8. Compare the customer vehicle's sound quality results to the known-good vehicle's results.

   - If the sound quality in the customer vehicle is comparable to the sound quality in the known-good vehicle, then the customer's vehicle is operating as designed.
   - If the sound quality is not comparable, check these items in order.
     - Loose or improperly installed speakers or other hardware that may become excited by the vibrations generated by the speakers
     - Damaged speaker(s)
     - Faulty navigation unit
     - Faulty audio unit

Seek Stop Test

Do this test to check the performance of the audio unit's AM and FM reception. Refer to symptom troubleshooting; audio system sound is weak or distorted (see page 23-44), or no sound is heard from the speakers (display is normal), with navigation (see page 23-37), without navigation (see page 23-39) before continuing with this test.

NOTE:
- Window tint, aftermarket theft-recovery devices and other aftermarket accessories may reduce radio reception.
- Changes in cloud cover and other atmosphere conditions will affect the ability of the navigation unit or audio unit to receive radio signals.

1. Park the customer's vehicle in an open area away from buildings or other obstructions.

2. Park a known-good vehicle (same year, model, and trim level) next to the customer's vehicle, facing the same direction.

3. Start the engine in the customer's vehicle, and turn on the radio.

4. Set the FM receiver to 87.7 MHz.

5. Press the Seek + button and record the first station that the navigation unit or audio unit locks onto.

6. Press the Seek + button repeatedly, and write down each station that the navigation unit or audio unit locks onto until the station recorded in step 5 is reached again.

7. Set the AM receiver to 530 kHz.

8. Press the Seek + button, and record the first station that the navigation unit or audio unit locks on to.

9. Press the Seek + button repeatedly, and write down each station that the navigation unit or audio unit locks onto until the station recorded in step 8 is reached again.

(cont'd)

Sound Quality Diagnosis (cont'd)

10. Turn the ignition switch to LOCK (0).

11. Start the engine in the known-good vehicle, and then do steps 4 thru 10 on the known-good vehicle.

12. Compare the number of stations received in steps 6 and 9 in the customer's vehicle with the number of stations received in the known-good vehicle.

    - If the number of stations received is the same, or within 10 %, the audio unit's tuner performance is OK. The problem may be atmospheric conditions, multi path interference, or other obstructions to the radio signal.
    - If the customer's vehicle receives fewer stations by at least 10 %, go to step 2 of poor AM or FM radio reception of interference, with navigation (see page 23-26), without navigation (see page 23-30).

Audio Unit Removal/Installation

Without navigation

SRS components are located in this area. Review the SRS component location (see page 24-11).
Also review the precautions and procedures (see page 24-13) in the SRS section before doing repairs or service.

NOTE:
- Put on gloves to protect your hands.
- Take care not to scratch the dashboard and related parts.
- Lay a workshop towel under the parts when working on them to protect the face panel from scratches or other damage.
- Do not work in a dusty or dirty place.
- Discharge static electricity from your body before and during the work.
- Do not touch the circuit board(s) with your bare hands.
- Do not work with dirty hands.
- Be careful not to fold the flat plate cable.
- Do not touch the terminal connector of the flat plate cable with your bare hands (If you have touched it, wipe it off thoroughly).
- Eject all the discs before removing the audio unit to prevent damaging the CD player's load mechanism.
- If you are replacing the audio unit, write down the audio presets (if possible), and enter them into the new audio unit.

1. Make sure you have the anti-theft code for the audio system.

2. Remove the subdisplay visor (see page 20-87).

3. Remove the center pocket hole lid and bolts, then pull out the center panel (A).

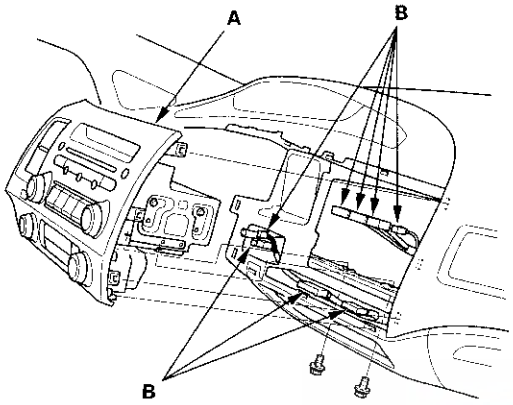

4. Disconnect the connectors (B), then remove the center panel.

5. Remove the bolts, screws and the brackets (A).

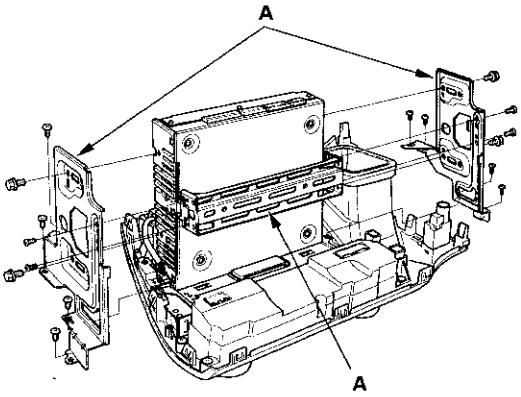

6. Remove the screws, rear covers (A) and the audio unit (B) from the center panel display (C).

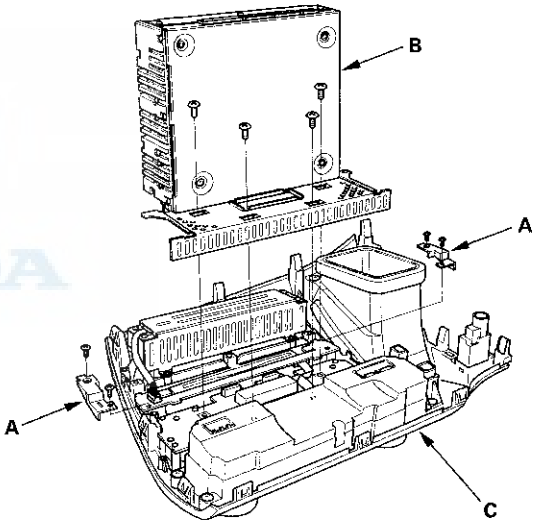

7. Install the audio unit in the reverse order of removal, and note these items:

   - Make sure all connectors and antenna lead are secure.
   - Enter the anti-theft code for the audio system, then set the clock.

XM Receiver Removal/Installation

'07-08 models with navigation

1. Open the trunk lid and remove the right trunk side trim panel (see page 20-68).
2. Disconnect the connectors (A) from the XM receiver (B).

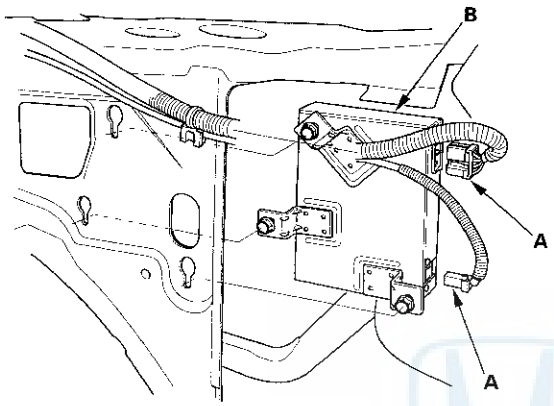

3. Loosen the three bolts, and remove the XM receiver.
4. Install the XM receiver in the reverse order of removal.

Speaker Replacement

Front Door Speaker

1. Remove the front door panel (see page 20-7).
2. Remove the screw. Then lift the speaker (A) straight up to release the lower clips (B).

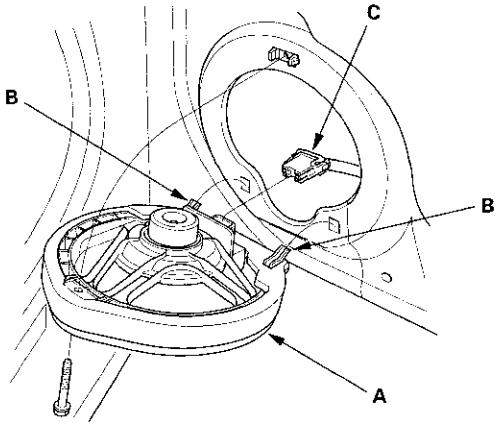

3. Disconnect the 2P connector (C), and remove the speaker.
4. Install the speaker in the reverse order of removal.

Tweeter

1. Carefully pry the tweeter grille (A) out of the dashboard. Be careful not to damage the tweeter grille and the dashboard.

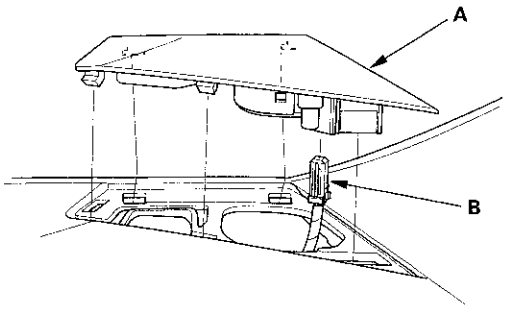

2. Disconnect the 2P connector (B) from the tweeter.
3. Remove the tweeter from the tweeter grille.

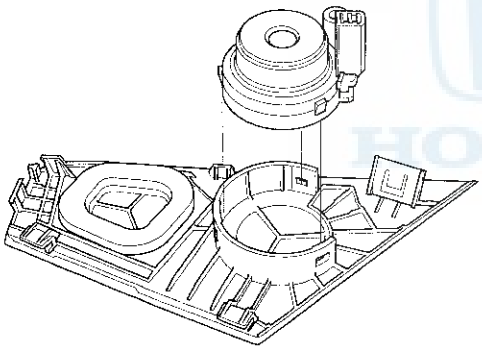

4. Install the tweeter in the reverse order of removal.

Rear Speaker

1. Remove the rear speaker grille (A).

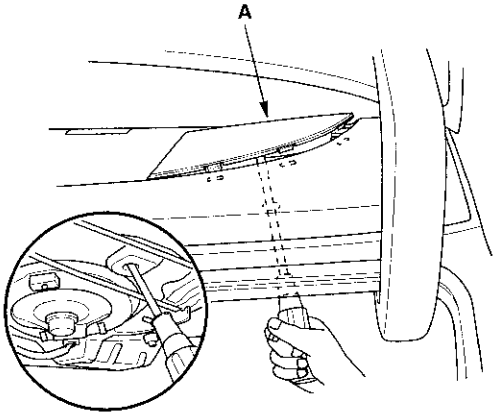

2. Remove the screw. Then lift the speaker (A) straight up to release the clips (B).

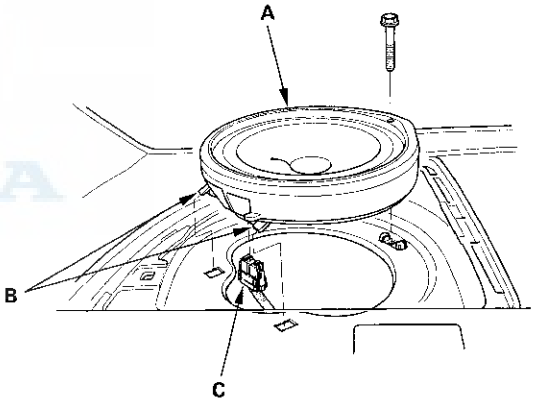

3. Disconnect the 2P connector (C), and remove the speaker.
4. Install the speaker in the reverse order of removal.

Auxiliary Jack Assembly Replacement

1. With navigation: Remove the navigation unit (see page 23-143).
   Without navigation: Remove the audio unit (see page 23-70).

2. Carefully pull out the auxiliary jack assembly (A), then disconnect the 5P connector (B).

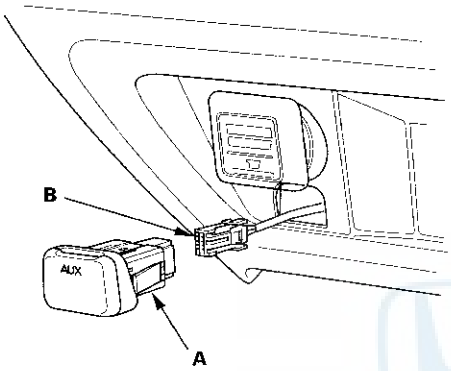

3. Install the auxiliary jack assembly in the reverse order of removal.

Audio Remote Switch Test

SRS components are located in this area. Review the SRS component location (see page 24-11).
Also review the precautions and procedures (see page 24-13) in the SRS section before doing repairs or service.

1. Remove the driver's airbag assembly (see page 24-184).

2. Remove the 20P connector (A) from the cable reel (B).

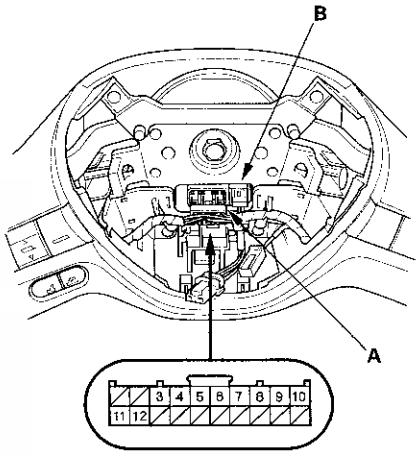

3. Measure the resistance between terminals No. 9 and No. 10 in each switch position according to the table.

Position	Resistance
No button pressed	About 10 kΩ
MODE	About 3.7 kΩ
CH (+)	About 1.7 kΩ
CH (−)	About 775 Ω
▲ (VOL.UP)	About 357 Ω
▼ (VOL.DOWN)	About 100 Ω

4. If the resistance is not as specified, replace the audio remote switch (see page 23-75).

Audio Remote Switch Replacement

SRS components are located in this area. Review the SRS component location (see page 24-11).
Also review the precautions and procedures (see page 24-13) in the SRS section before doing repairs or service.

1. Remove the steering wheel (see page 17-6).
2. Remove the audio remote switch (see page 17-7).
3. Install the audio remote switch in the reverse order of removal.

AM/FM Antenna Replacement

'06 model and '07-08 models without navigation

1. Remove the headliner (see page 20-71).
2. Disconnect the AM/FM antenna lead 3P connector (A) from the AM/FM antenna (B).

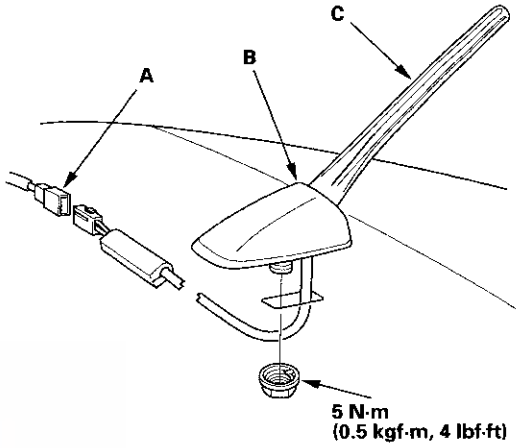

3. Remove the nut, then carefully pull out the AM/FM antenna. If necessary, remove the antenna mast (C).
4. Install the AM/FM antenna in the reverse order of removal.

AM/FM/XM Antenna Replacement

'07-08 models with navigation

1. Remove the headliner (see page 20-71).

2. Disconnect the AM/FM antenna lead 3P connector (A) and the XM antenna lead 2P connector (B) from the AM/FM/XM antenna (C).

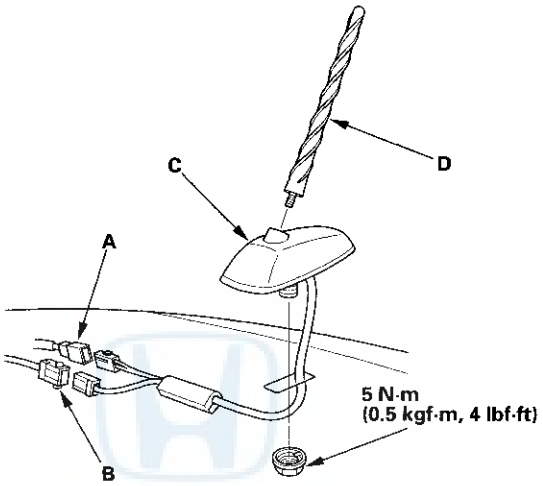

3. Remove the nut, then carefully pull out the AM/FM/XM antenna. If necessary, remove the antenna mast (D).

4. Install the AM/FM/XM antenna in the reverse order of removal.

Component Location Index

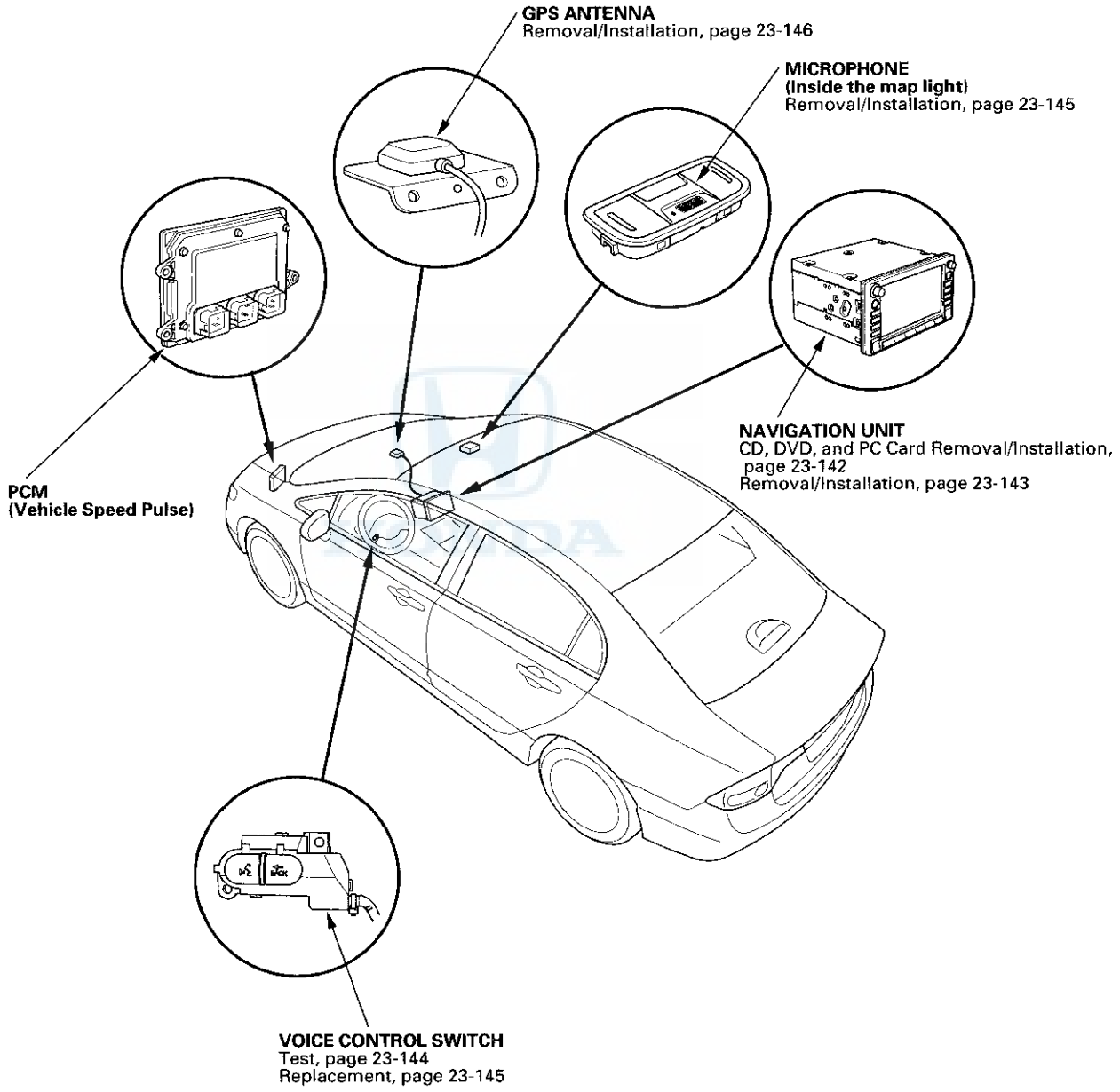

General Troubleshooting Information

General Operation

Refer to the Navigation System manual for the navigation system operating procedures.

Anti-theft Feature

The navigation system has a coded theft protection circuit. Be sure you have the customer's anti-theft security code before;

- Disconnecting the battery
- Disconnecting the navigation unit A (17P) and C (12P) connector
- Removing the No. 23 (10 A) fuse from the under-hood fuse/relay box

After service, reconnect power to the navigation unit, and turn the ignition switch to ON (II). Enter the 4-digit anti-theft security codes, then select Done.

If the code cannot be found, use the interactive Network (*i*N) to look it up. You can view the serial number in one of the Navi ECU diagnostic screen (see page 23-127). Alternatively, you can find the serial number from the navigation unit in the dash.

When replacing the navigation unit, be sure to give the customer the new anti-theft security code.

Symptom Diagnosis

Certain circumstances and system limitations can result in occasional vehicle positioning errors. Some customers may think this indicates a problem with the navigation system when, in fact, the system is normal. Keep the following items in mind when interviewing customers about symptoms of the navigation system.

Self-Inertial Navigation Limitations

The limitations of the self-inertial portion of the navigation system (the yaw rate sensor and the vehicle speed signal) can cause some discrepancies between the vehicle's actual position and the indicated vehicle position (GPS vehicle position).

The following circumstances may cause vehicle positioning errors:

- Moving the vehicle with the engine stopped and the vehicle stopped, such as by ferry or tow truck, or if the vehicle is spun on a turn table.
- Tire slippage, changes in tire rolling diameters, and some driving situations may cause discrepancies in travel distances. Examples of this include:
  - Continuous tire slippage on a slippery surface.
  - Driving with snow chains mounted.
  - Abnormal tire pressure.
  - Incorrect tire size.
  - Frequent lane changes across a wide highway.
  - Continuous driving on a straight or gently curving highway.
- Tolerances in the system and map inaccuracies will sometimes limit how precisely the vehicle position is indicated. Examples of this include:
  - Driving on roads not shown on the map (map matching is not possible).
  - Driving on a road that winds in one direction, such as a loop bridge, an interchange, or a spiral parking garage.
  - Driving on a road with a series of sharp hair-pin turns.
  - Driving near a gradual highway exit or transition.
  - Driving on one of two close parallel roads.
  - Making many 90 degree turns.
  - The direction to destination icon or the destination icon shown or the map may be up to several hundred feet away from the actual location.

Global Positioning System (GPS) Limitations

The GPS cannot detect the vehicle's position during the following conditions:

- Metallic window tinting above the GPS antenna.
- When only three satellite signals are received (Four satellite signals are required for accurate positioning).
- When driving near high tension power lines.
- When the satellite signals are blocked by the operation of some electronic aftermarket accessories including, but not limited to non-OEM in-dash entertainment units (radio, CD players/changers, radar detectors and theft recovery systems) and cell phones placed near the navigation system.
- When the satellite control centers are experiencing problems.

The accuracy of the GPS is reduced during these instances:

- Metallic window tinting above the GPS antenna.
- When only three satellite signals are received (Four satellite signals are required for accurate positioning).
- When driving near high tension power lines.
- When the satellite signals are blocked by the operation of some electronic aftermarket accessories including, but not limited to non-OEM in-dash entertainment units (radio, CD players/changers, radar detectors and theft recovery systems) and cell phones placed near the navigation system.
- When the satellite control centers are experiencing problems.

Muting Logic

Whenever the navigation system is giving guidance, the front speakers are muted. When the voice control system is being used, all of the speakers are muted.

LCD Unit Limitations

- In cold temperatures, the display may stay dark for the first 2 or 3 minutes until it warms up.
- When the display is too hot because of direct summer sunlight, it will remain dark until the temperature drops.
- When the humidity is high and the interior temperature is low, the display may appear cloudy. The display will clear up after some use.
- Fingerprints on the touch panel may sometimes be noticeable because of the panel's low-reflection coating. Clean the screen with a soft damp cloth. You may use a mild cleaner intended for eye glasses or computer screens. To avoid scratching the panel, do not rub too hard, or use abrasive cleaners, or shop towels.
- The touch panel consists of a touch sensitive resistive membrane covering the display. Unlike previous systems, you must actually touch the display to activate it. Never use hard or sharp implements to operate the screen because you risk damaging the sensing membrane. If a touch switch does not function immediately, shift your finger slightly, and touch it again.

(cont'd)

General Troubleshooting Information (cont'd)

Symptom Duplication

- If you can duplicate the symptom, compare it to a known-good vehicle. Only use a vehicle of the same model, same year, same trim, and same software version. If you can duplicate the symptom in the known-good vehicle, then it is a characteristic of the system.
- When the symptom can be duplicated, follow the self-diagnostic procedures and the appropriate troubleshooting procedures.
- When the symptom does not reappear or only reappears intermittently, ask the customer about the conditions when the symptom occurred.
  - Try to establish if outside interference may be the cause.
  - Try to duplicate the symptom under the same conditions the customer experienced.
  - Vibration, temperature extremes, and moisture (dew, humidity) are factors that are difficult to duplicate.
  - Inspect the vehicle for aftermarket electronic devices (vehicle locators, radar detector amps, etc.) that may be hidden.

NOTICE

When troubleshooting navigation system problems, ensure that the known-good vehicle is the same software version year and model as the vehicle being serviced. Mixing incompatible navigation DVDs or other system components can delay the troubleshooting process by creating effects unrelated to the original problem.

Service Precautions

- If you need to replace the navigation unit, inform the customer that personal information in the navigation system may be lost. If possible, have the customer record their personal information before the unit is replaced On '07-08 models you can back-up the navigation data and transfer it to a new navigation unit. See save users memory (see page 23-138).
- Before disconnecting the battery, make sure you have the anti-theft codes for the audio and the navigation system, and write down the audio presets. Also obtain any PGM-FI or transmission DTCs and freeze frame date (which are lost when the PCM loses power).
- When the battery is disconnected, the internal GPS clock is reset to 0:00. The clock will reset to the correct time after the system finishes GPS initialization.
- After reconnecting the battery, you have to wait to get the initial signal from the satellite. It will take from 10 to 45 minutes.
- Before returning the vehicle to the customer, enter the audio and navigation anti-theft security code, then enter the audio presets.
- Adjust the setup clock settings (time zone and daylight savings) in the navigation system.

System Initialization

If the navigation system loses power (like the battery was disconnected), the navigation system requires initialization. Once completed, your system is ready to use.

This initialization requires the following:

- Entering the 4-digit anti-theft security code to unlock the system
- GPS initialization (may not be needed depending of the length of time the system was without power)
- Map matching to align the GPS to a location on the map

Entering Security Code

Any time the navigation system loses power, you need to enter the 4-digit anti-theft code on the navigation system display. The 4-digit code is located on a small card that was given to the customer. Enter the 4-digit code, then select Done.

If the navigation system anti-theft code is missing, use the interactive Network (*i*N) to look it up. You will need the serial number for the navigation unit to do this. You can view the serial number by entering the diagnostic mode. Select Unit Check from the main menu, then the Navi ECU diagnostic screen. This gives you the serial number without removing the navigation unit.

The *i*N may display more than one code for a given serial number. This is because serial numbers are not unique. You may have to try more than one 4-digit code. If no code is shown, or if the code(s) given do not work in the navigation unit, contact the Automobile Warranty department. If the code 0000 works, replace the navigation unit.

When replacing the navigation unit, make sure you give the customer the new anti-theft security code.

GPS Initialization

NOTE: You must park the vehicle outside with a clear view of the southern sky.

Depending on the length of time the battery was disconnected, your system may require GPS initialization. If it does, the following screen appears:

*****Wait*****

The system is acquiring its GPS signal.
This could take up to 10 minutes.
- **Engine must be running**
- **Vehicle must be parked outside, away from buildings**
- **Do not move the vehicle at this time**

If this procedure is not necessary, the system proceeds directly to the Disclaimer screen. During initialization, the system searches for all available GPS satellites, and obtains their orbital information. During this procedure the vehicle should be out in the open with a clear view of the sky.

(cont'd)

General Troubleshooting Information (cont'd)

If the navigation system finds the satellites properly, this box clears, and changes to the Disclaimer screen. If within 10 minutes the system fails to locate a sufficient number of satellites to locate your position, the following screen appears.

Navigation system is unable acquire a proper GPS signal.
- **Move vehicle to another location**
- **Turn the ignition switch off**
- **Disconnect the battery for 30 minutes to clear the GPS receiver's memory**
- **Reconnect the battery and follow the screen prompts**

After 30 minutes with this screen displayed, turn off the engine, then restart the vehicle. If the Disclaimer screen appears, the GPS initialization is complete.

NOTE:
- The average acquiring time is less than 10 minutes, but it can take as long as 45 minutes.
- If the system is still unable to acquire a signal, follow the instructions on the screen. If this screen appears again, go to troubleshooting for the GPS icon is white or not shown (see page 23-110).
- To bypass the GPS acquire screens, press and hold the Menu, and Zoom out keys at the same time. Touch the Return button on the screen to exit the diagnostic mode. This allows you to continue troubleshooting while in the shop.

Map Matching

This part of the initialization matches the GPS coordinates with a road on the map screen. To do this part of the procedure, make sure that the navigation system displays a map, and drive the vehicle on a mapped road shown on the map screen. Do not enter a destination at this time. When the name of the current road you are driving on, appears at the bottom of the screen, the entire procedure is complete. Your system is now ready to use.

Obtaining a Navigation DVD

If the navigation DVD is lost or damaged, or you need a yearly updated DVD, you have 2 ways to purchase one. You can either call (888) 291-4675, or order on-line at www.hondanavi.com.

Both methods require a credit card. The DVD for this model has a turquoise (blue/green) label, and cannot be ordered through the parts system. The following DVDs will not work in this navigation system:

- Earlier model navigation DVDs (black, orange, or older versions with a white label)
- Map software programs manufactured by other companies
- DVD movies, or DVDs containing audio recordings
- Copies of an original Navigation DVD

Update DVDs are available for purchase usually in the fall of each year. They may contain the following:

- Enhanced maps and points of interest (POI) coverage
- Fixes for minor software bugs
- Additional features

NOTE:
- Map matching must be done any time the DVD is removed or replaced.
- Always order navigation DVDs on an as-needed basis. During a typical model year, each color DVD may undergo a half a dozen software only version upgrades to fix minor issues on some or all models the DVD supports. This is normal. Usually only the letter at the end of the version number changes, while the database (maps and POIs) remain unchanged.
- Never promise your customers future free updates. There are no free programs for updating the navigation DVD. Update DVDs are generally available for purchase each fall. The on-time DVD order site provides information when an update for a particular color DVD is available, damaged discs are not warrantable.

DVD Handling and Cleaning

To avoid damaging or leaving fingerprints on the DVD, always handle it by the edges and place it in a jewel case whenever it is outside the navigation unit. Deep scratches or fingerprints on the back of the DVD can cause intermittent rebooting or other system errors.

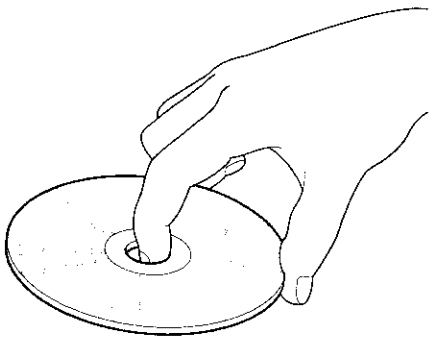

Smudges and fingerprints can be carefully removed using a mild cleaner and tissues designed to clean eyeglasses. To clean a DVD, use a clean soft cloth. Very gently wipe across the DVD from the center to the outside edge, never in a circular motion.

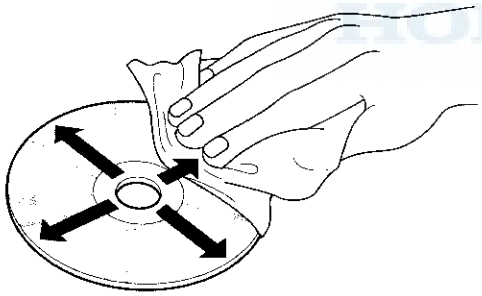

Do not place stabilizer rings or labels on the DVD.

Earliest DVD Version Application for Each Model

Each navigation system DVD contains a map/POI (point of interest) database and the navigation system software for each model that it supports. Inserting an older DVD can cause problems since it lacks the software to provide the specific features needed for that model. Unfortunately, the navigation software does not detect or warn you that the version is outdated, and it may even appear to operate.

NOTE: Replacing a DVD just because the version number is higher is not always warranted. A higher software version does not necessarily mean it contains newer software for your model. The DVD contains software for all models that use the same color DVD, and a revised number may or may not have software fixes or upgrades for the model in question.

Typical warning symptoms that an outdated DVD is being used include:

- The Honda model navigation screen displays an Acura logo while booting up.
- A newly introduced model future or accessory may not display properly, and Extension displays instead.

  NOTE: Extension may be displayed when using Music Link, but should never be displayed when XM is selected.

- The current street (the street being driven on) does not appear properly at the bottom of the map screen display when the vehicle is driven on a main road.

  NOTE: If necessary, compare the operation to the navigation system of the same model and year vehicle that has a current DVD.

(cont'd)

General Troubleshooting Information (cont'd)

How to Identify Navigation DVD Versions, and How to Inspect A DVD for Damage

To determine the navigation version on a particular model, start the engine, then locate the navigation unit. Open the DVD door, and push the eject button to eject the DVD. Hold the DVD by the edges, and check for these items:

- The DVD label color.
- Read the DVD version on the label, and note it on the repair order. The version number is near the bottom of the label text (for example, ver: 4.23A). You will need this version number:
  - To verify that the DVD version is appropriate for the vehicle. Check any official Honda service website for more service information.
  - Any time you call Tech Line regarding a navigation system issue.
  - To answer customer inquires concerning update or coverage issue.

    NOTE: Customers may obtain DVDs from sources outside the normal ordering process. If you determine this is the case, recommend that your customer purchase the appropriate DVD from the Honda Disc Fulfillment Center (see ORDERING A DVD).

  - Check the underside of the DVD for signs of mishandling. Deep scratches, or random scratches, light swirl marks, or fingerprints can cause random lock-ups, reboots, erratic voice response, erratic positioning errors, and DVD read or format errors.

    NOTE: A damaged DVD is not covered under warranty unless the disc is damaged by the navigation unit. Damage by the navigation unit typically appears as circular scratches caused by something rubbing against the DVD as it spins. The damage may appear as arcs or complete circles on the DVD reading surface.

  - Verify that the underside of the DVD is silver, and not a copy with a blue color. Copies will not work properly and can cause other symptoms that mimic hardware problems.

- Incorrectly colored DVDs being put into navigation vehicles. This causes the system to either display error messages, or causes system malfunctions that mimic a hardware problem. This results in the customer leaving with a malfunctioning navigation system.
- The DVD version provided to the customer is out-of date or incompatible with a particular model. This inconveniences your customer by delaying the repair, or by causing additional (and unnecessary) returns to your dealership.
- The customer experiences bugs or other issues that have already been resolved in later versions currently available at the fulfillment desk.

If the DVD is defective, or has any of the issues mentioned above, return the vehicle to your customer and recommend that they order the proper DVD from the Honda Disc Fulfillment Center (see ORDERING A DVD).

NOTE: Navigation DVDs do not come with replacement navigation units. If you are replacing a navigation unit because it is defective (following appropriate service manual troubleshooting), and the DVD does not eject, order a DVD. See Obtaining a navigation DVD.

How to Answer Customer Questions About Navigation Coverage

Some customers may ask questions regarding a city, address or POI (point of interest) covered by the navigation system. It is better to verify a coverage question on an actual vehicle than to disappoint your customer by promising coverage that may be incomplete or missing in their area. The following suggestions can be used to answer coverage inquiries from your customer.

Is my address covered by the navigation system?

Using a current production vehicle (of the same model), enter the customer's address (street first) to see if their area is covered. Always enter the street first, because sometimes their city may be included in a neighboring township, or under some lager metropolitan city name. If the address is shown in a later year vehicle, but not your customer's vehicle, you might want to recommend that your customer purchase an update.

Is my city covered by the navigation system?

For general questions about whether a city is covered, view the map coverage link on the DVD order site. On the site, you enter a year and model, and then click on the Coverage link. You then select a state or province, and the cities are listed. Of course, this does not guarantee that the customer's road or address is in the system. Verifying on an actual production vehicle is always the best guarantee that your information is accurate.

The gas station on my corner is now a restaurant. Why is it still incorrect in the navigation system?

For POI-related customer questions, explain that businesses are constantly moving, and there can be a considerable lag in updating the millions of POIs in the system. The database is updated annually, and the best way to the verify whether the POI is accurate is verify the inquiry on a current production vehicle.

Answers to these and other questions regarding coverage can be found in these locations:

- In the Frequently Asked Questions section of the navigation system manual.
- At the on-line DVD order site, by clicking on the **FAQs** link (see ORDERING A DVD).

Precaution on Customer Sneak Previews

Your customer might request a look (or sneak preview) at features in the latest navigation software. You should never preview a navigation DVD in a customer's vehicle. Inserting a newer DVD installs the latest software from the DVD into the memory of the customer's navigation system. When the original DVD is reinstalled, the newer software remains in memory and is often incompatible with the customer's original DVD Map and POI database, or software.

If wishes to see the latest navigation coverage or software features, demonstrate it on an in-stock vehicle that already has the latest DVD version.

If, by chance, a newer version is loaded accidentally, either by the dealer or the customer, the only remedy is to enter the navigation diagnostic mode's Version screen and do a forced download. Check any official Honda service website for more information about what patches may need reinstalling.

Why are some features different or missing compared to my previous Honda vehicle?

Hardware and software continually go through updates and improvements. Features may change or disappear over time based on the navigation system development.

Symptom Troubleshooting Index

Symptom	Diagnostic procedure	Also check for
Navigation system stays on the GPS initialization screen	System Initialization (see page 23-80)	• Navigation unit • GPS antenna/cable is disconnected or damaged • The wrong color DVD is installed • The DVD is damaged or dirty • Harness/fuses/switches
Vehicle position icon constantly leaves road, moves erratically, or is displayed very far from actual vehicle position	Symptom Troubleshooting (see page 23-114)	• Navigation unit • GPS antenna/cable • PCM (speed and fuel pulses • Harness/fuses/switches
System always comes up in in-line diagnostic mode	Symptom Troubleshooting (see page 23-115)	
Navigation system will not accept security code	Symptom Troubleshooting (see page 23-122)	Wrong color DVD
Navigation frequently asks for anti-theft code and/or needs GPS initialization	Symptom Troubleshooting (see page 23-119)	• Loss of voltage or poor ground (G504, G505) • Navigation unit • Low battery voltage • Harness/fuses/switches
GPS icon is white or not shown	Symptom Troubleshooting (see page 23-110)	• Navigation unit • Aftermarket accessories connected to the system • The wrong color DVD is installed • The DVD is damaged or dirty • GPS antenna/cable • Harness/fuses/switches
Vehicle icon wanders across the map when driving (does not follow a displayed road) or map or vehicle ICON spins	Symptom Troubleshooting (see page 23-114)	• Navigation unit • GPS antenna/cable • PCM (speed signal)
No picture is displayed	Symptom Troubleshooting (see page 23-107)	• Navigation unit • The wrong color DVD is installed • The DVD is damaged or dirty • Harness/fuses/switches
Picture has lines/rolls/other issues or is an odd color	Symptom Troubleshooting (see page 23-108)	• Navigation unit • The wrong color DVD is installed • The DVD is damaged or dirty • Aftermarket accessories connected to the system • Harness/fuses/switches
Display day/night mode does not work or does not work properly	• If you use the display mode button, the auto day/night function is disabled until you turn the ignition switch to ON (II) • Symptom Troubleshooting (see page 23-116)	• Display brightness set to High in day or night mode • Gauge control module • The wrong color DVD is installed • The DVD is damaged or dirty • Harness/fuses/switches
System locks up or freezes constantly	Symptom Troubleshooting (see page 23-116)	• Navigation unit • The wrong color DVD is installed • The DVD is damaged or dirty • Harness/fuses/switches

Symptom	Diagnostic procedure	Also check for
Voice guidance cannot be heard, is broken up, or there is static	Symptom Troubleshooting (see page 23-110)	• Volume or voice feedback setting (see Owner's manual) • Navigation unit • Harness/fuses/switches
Voice control does not work/ respond	Symptom Troubleshooting (see page 23-111)	• Navigation unit • The wrong color DVD is installed • The DVD is damaged or dirty • Microphone harness/switches
Navigation cannot control HVAC by voice command	Symptom Troubleshooting (see page 23-118)	• The wrong color DVD is installed • Harness/fuses/switches • Wrong navigation unit (model code)
Navigation cannot control XM radio	Symptom Troubleshooting (see page 23-118)	Low or weak battery
Navigation cannot control audio system	Symptom Troubleshooting (see page 23-117)	The wrong color DVD is installed
Navigation display buttons do not work or respond properly	Symptom Troubleshooting (see page 23-109)	• Navigation unit • Open/short between the XM receiver or the GA-Net bus • The wrong color DVD is installed • The DVD is damaged or dirty
Today's Destinations button is dim and not selectable in the Enter destination by screen (grayed-out)	The customer has not entered a group of locations for Today's Destinations. This is normal. The button is only selectable if the customer is using this function	See Owner's Manual
Some set-up and information functions of the navigation system are grayed-out and do not work	Customer did not select OK from Disclaimer screen. Refer to System Function Diagram (see page 23-99)	
Previous Destinations button is dim and not selectable in the Enter destination by screen (grayed-out)	The vehicle may be new, or the customer deleted the destination. Enter a destination, and allow the system to route to it. After the trip, the Previous Destinations button will be selectable	
Address cannot be found or system gives poor routing	• Verify proper operation and system limitations using the owner's manual • See Answering customer question Navigation coverage in general troubleshooting • Refer to Database limitation in the navigation system manual to report database errors	• Database limitations (address not in database) • The wrong color DVD is installed
OPEN/CLOSE function of the display does not work	Symptom Troubleshooting (see page 23-120)	• Navigation unit • Harness
Navigation display will not close	Symptom Troubleshooting (see page 23-121)	• Navigation unit • Harness
Navigation display does not open or opens part way	Symptom Troubleshooting (see page 23-121)	• Navigation unit • Harness
PC card will not play/card icon on audio screen cannot be selected (with navigation)	Symptom Troubleshooting (see page 23-58)	Navigation unit

(cont'd)

Navigation System ('06-08 models)

Symptom Troubleshooting Index (cont'd)

Symptom	Diagnostic procedure	Also check for
Navigation display stays on with ignition switch in LOCK (0)	Symptom Troubleshooting (see page 23-117)	• Harness/fuses/switches • Aftermarket accessories connected to the system
DVD read error messages	Symptom Troubleshooting (see page 23-115)	• Navigation unit • The wrong color DVD is installed • Damaged DVD
Navigation system will not go beyond the disclaimer screen and displays the OK button	See navigation display buttons do not work or respond properly	• The wrong color DVD is installed • Scratched or damaged DVD • Navigation unit
The navigation anti-theft code card is lost or missing	See anti-theft feature (see page 23-78)	
The vehicle icon lags behind when the vehicle turns	See self-internal navigation limitations (see page 23-78)	• Aftermarket accessories connected to the system • GPS antenna/cable
Navigation screen is darker than normal or takes time to brighten when it is cold	See LCD unit limitations (see page 23-79)	
The navigation clock is off by 1 to 3 hours after replacing the navigation unit	See service precautions (see page 23-80)	• Perform map matching (see page 23-82) • GPS antenna/cable • Check and adjust the clock settings
A new navigation DVD is needed	See obtaining navigation DVD (see page 23-82)	
Time is not correct	Reset Time Adjustment in set-up	The wrong colored DVD or version is installed
The DVD is scratched or dirty	See DVD Handling and Cleaning (see page 23-83)	Navigation unit
The wrong DVD was installed and now the system does not function properly	See Precaution customer Sneak Previews (see page 23-85)	• Install the correct version DVD • Check any official Honda service website for more service information about the navigation system
A specific city cannot be found	See How to answer customer questions about navigation coverage (see page 23-85)	• The DVD is scratched or dirty • Refer to Database limitation in the navigation system manual to report database errors
The Acura Globe Screen (not the Honda Globe Screen) appears every time the vehicle is started	Symptom troubleshooting (see page 23-123)	Also see the symptom The wrong DVD was installed and now the system does not function properly

System Description

Overview

The navigation system is a highly sophisticated, hybrid locating system.

The navigation unit uses global positioning system (GPS) satellite signals, internal yaw and vehicle speed inputs, and a map database to show where the vehicle is and to help guide you to a desired destination.

The navigation unit's GPS receiver receives signals from the GPS, a network of 24 satellites in orbit around the earth. By receiving signals from several of these satellites, the navigation system can determine the latitude, longitude, and elevation of the vehicle.

Signals from the system's yaw rate sensor (inside the navigation unit) detects turns, and the PCM vehicle speed pulse (VSP) and reverse signal enable the system to keep track of the vehicle's speed and direction of travel. The advantage of this hybrid system is that the system can track your position if either the GPS signal or the vehicle speed signal is missing. For instance, when in a tunnel (no GPS), the speed signal is used to update your position on the map. Alternately, while the vehicle is being transported on a ferry, GPS signals can show the vehicle position on the map as it crosses the water.

The navigation system uses the location, direction, and speed information to display the appropriate map and calculate a route to the destination entered. As you drive to a destination, the system provides both visual and audio guidance. Audio guidance is sent to the audio unit, and an RGB graphics color signal is sent to the navigation display.

This navigation system also has voice recognition that allows voice control of most of the navigation, and audio functions. The voice control switches (navigation TALK and BACK buttons on the steering wheel) activate the voice control system. The microphone on the ceiling receives your voice commands. For more information on this feature, consult the navigation owner's guide.

The illumination signal is used by the navigation unit to automatically switch the display mode between the Night and Day display modes. When the headlights are on, the dash brightness control setting full brightness overrides the Night display mode, and allows a daytime navigation display with the lights on.

When the navigation system is giving voice guidance commands, the front speakers are muted. When the voice control system is being used (navigation TALK button pressed), all of the speakers are muted.

The internal GA-Net II bus passes information back and forth between the navigation display, the navigation unit, and the audio system components. The information passed on this bus are touch button commands, audio muting signal, audio (radio and XM), and any open in these bus lines can affect the navigation system or other audio accessory operation.

The clock on the navigation display is set and maintained by the navigation unit. The time is automatically adjusted for daylight savings, and time zone changes while driving. The time can be adjusted in setup.

Additional information is available about the navigation components following the System Diagram. A glossary of terms that are used throughout this section follows the detailed information.

The Navigation System Manual in the glove box covers all of the system functions and settings. Use this as a resource when evaluating a customer concern.

(cont'd)

System Description (cont'd)

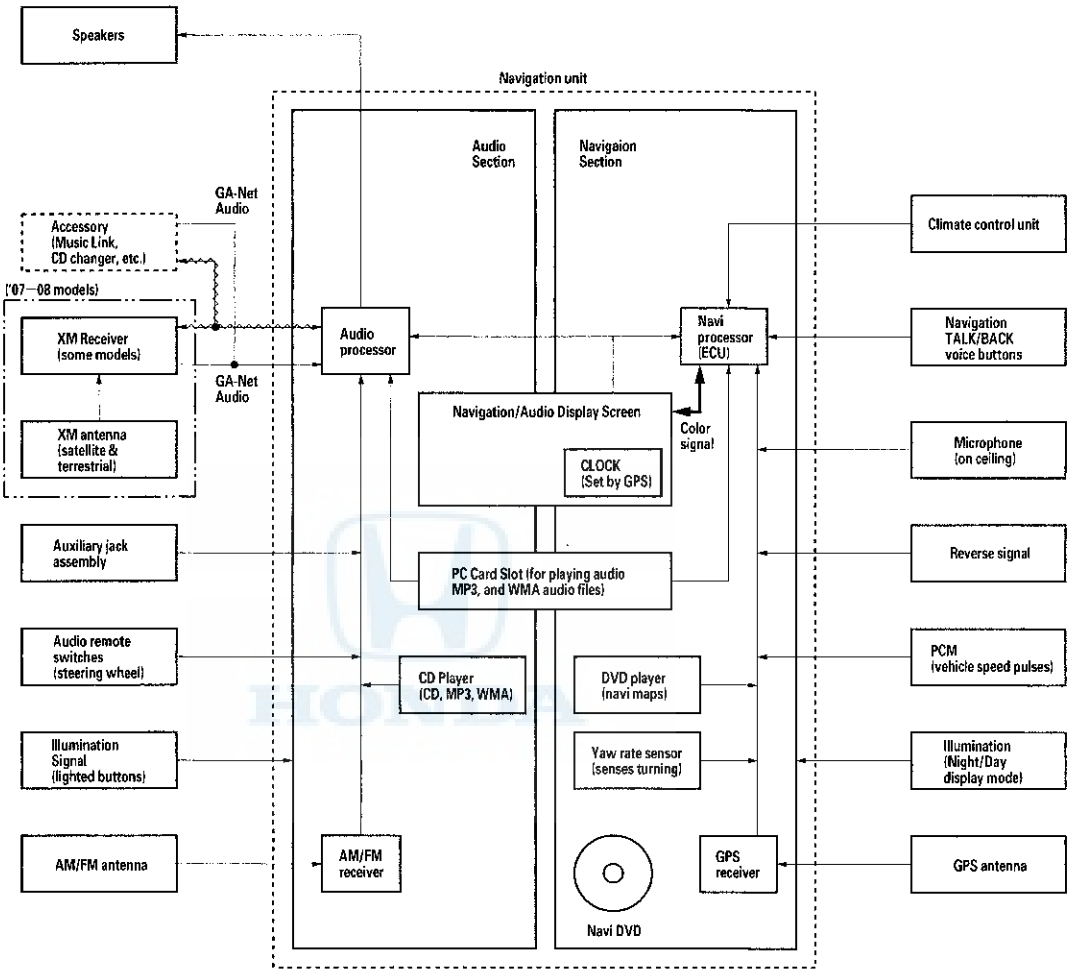

Navigation Function

The navigation system is composed of the navigation unit, the PCM (vehicle speed signal), the GPS antenna, the microphone, the voice control switch, the XM receiver, and the climate control unit.
These units communicate with each other on the GA-Net bus.

Function Diagram

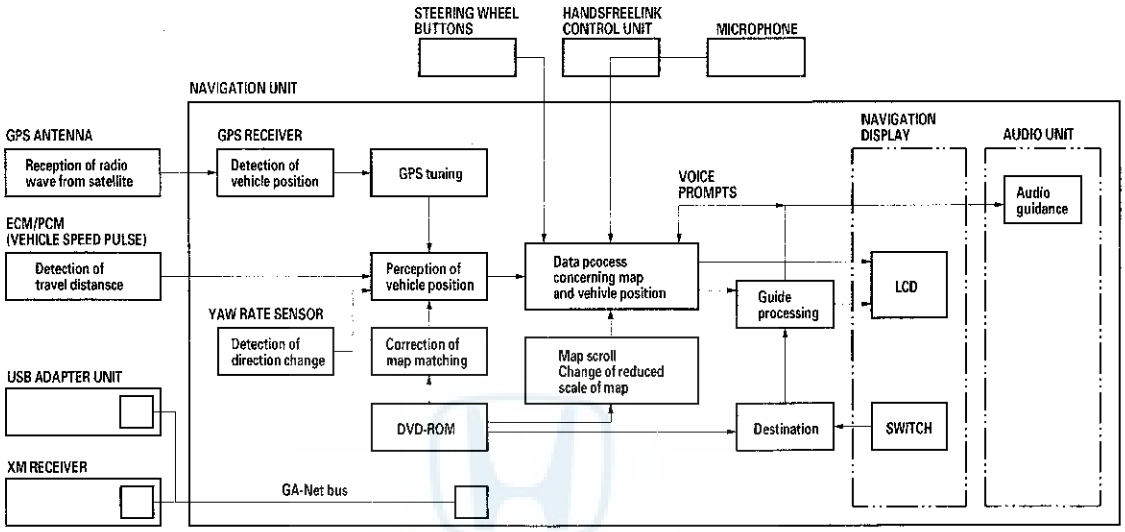

Vehicle Speed Pulse

The vehicle speed pulse is sent by the PCM. The PCM receives a signal from the countershaft speed sensor, then it processes the signal, and transmits it to the speedometer and other systems.

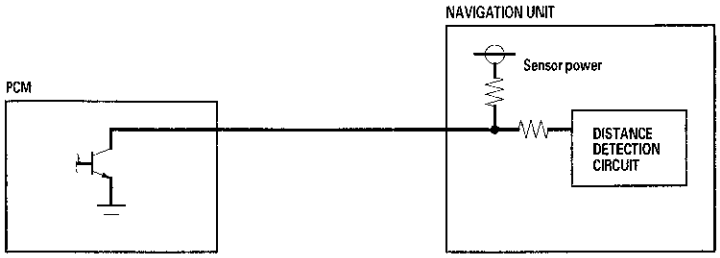

(cont'd)

System Description (cont'd)

GA-Net Bus Configuration

The GA-Net bus passes audio and navigation commands throughout the navigation and audio components. These commands include audio/XM selections by voice, and XM station and music title names. Because the entire bus is daisy chained between components (see diagram below), any open or short in the GA-Net bus harness will cause any or all of these functions to become inoperative. The addition of any factory audio accessory must maintain the continuity of the GA-Net bus by installing the Y cable included with the accessory kit.

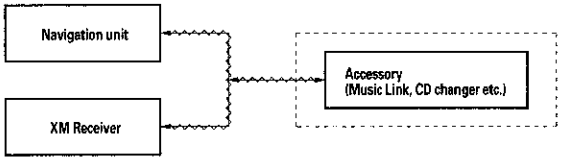

Yaw Rate Sensor
The yaw rate sensor (located in the navigation unit) detects the direction change (angular speed) of the vehicle. The sensor is an oscillation gyro built into the navigation unit.

Sensor Element Structure
The sensor element is shaped like a tuning fork, and it consists of the piezoelectric parts, the metal block, and the support pin. There are four piezoelectric parts: one to drive the oscillators, one to monitor and maintain the oscillation at a regular frequency, and two to detect angular velocity. The two oscillators, which have a 90-degree twist in the center, are connected at the bottom by the metal block and supported by the support pin. A detection piezoelectric part is attached to the top of each oscillator. The driving piezoelectric part is attached to the bottom of one oscillator, and the monitoring piezoelectric part is attached to the bottom of the other oscillator.

Oscillation Gyro Principles
The piezoelectric parts have electric/mechanical transfer characteristics. They bend vertically when voltage is applied to both sides of the parts, and voltage is generated between both sides of the piezoelectric parts when they are bent by an external force. The oscillation gyro functions by utilizing this characteristic of the piezoelectric parts and Coriolis force. (Coriolis force deflects moving objects as a result of the earth's rotation.) In the oscillation gyro, this force moves the sensor element when angular velocity is applied.

Operation
1. The driving piezoelectric part oscillates the oscillator by repeatedly bending and returning when an AC voltage of 6 kHz is applied to the part, The monitoring-side oscillator resonates because it is connected to the driving-side oscillator by the metal block.
2. The monitoring piezoelectric part bends in proportion to the oscillation and outputs voltage (the monitor signal). The navigation unit control circuit controls the drive signal to stabilize the monitor signal.
3. When the vehicle is stopped, the detecting piezoelectric parts oscillate right and left with the oscillators, but no signal is output because the parts are not bent (no angular force).
4. When the vehicle turns to the right, the sensor element moves in a circular motion with the right oscillator bending forward and the left oscillator bending rearward. The amount of forward/rearward bend varies according to the angular velocity of the vehicle.
5. The detecting piezoelectric parts output voltage (the yaw rate signal) according to the amount of bend. The amount of vehicle direction change is determined by measuring this voltage.

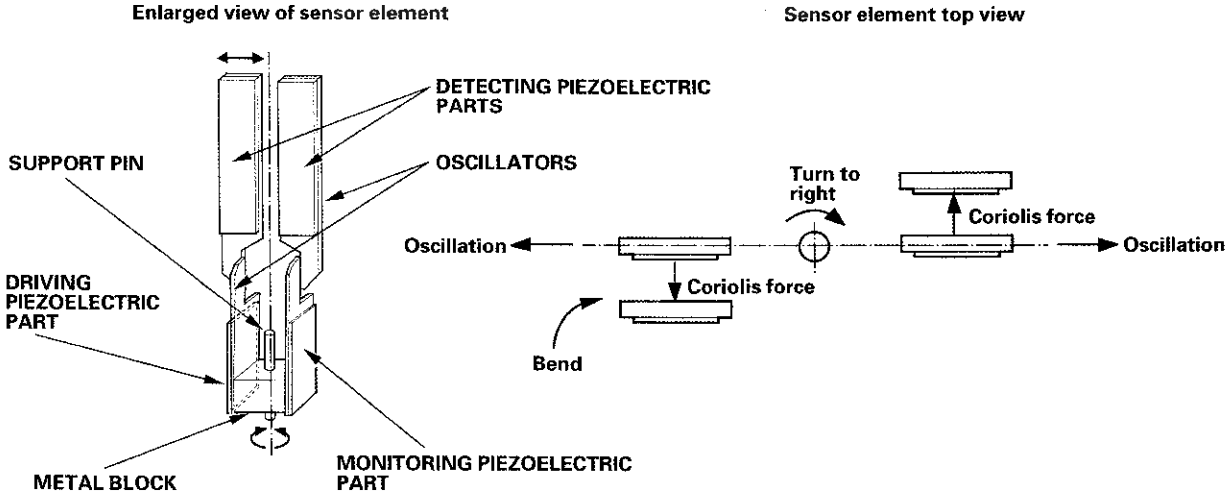

(cont'd)

System Description (cont'd)

Global Positioning System (GPS)
The global positioning system (GPS) enables the navigation system to determine the current position of the vehicle by using the signals transmitted from the satellites in orbit around the earth. The satellites transmit the satellite identification signal, orbit information, transmission time signal, and other information. When the GPS receiver receives a signal from four or more satellites simultaneously, it calculates the current position of the vehicle based on the distance to each satellite and the satellite's positions in its respective orbit.

Position Detection Image with GPS Satellite

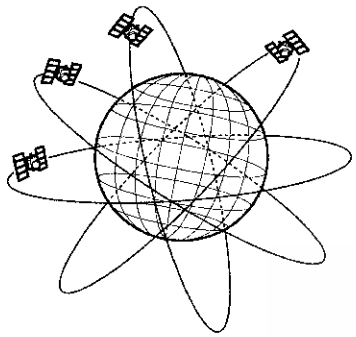

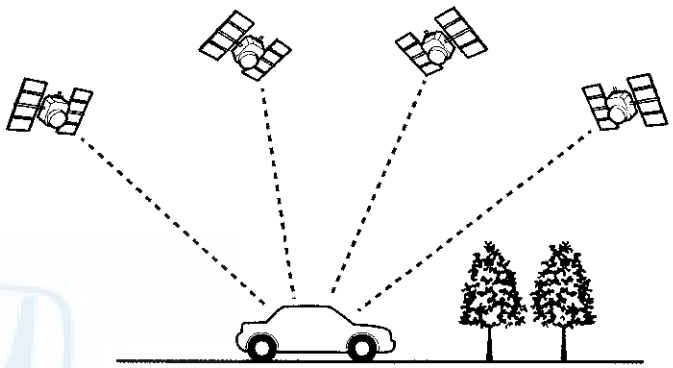

Precision of GPS
The precision of the GPS varies according to the number of satellites from which signals are received and the view of the sky. The accuracy is indicated by the color and shape of the GPS icon shown on the display.

GPS ICON COLOR	NUMBER OF SATELLITES	CONDITION	DESCRIPTION
No GPS icon	None	Faulty reception	The GPS can't be utilized due to a faulty GPS receiver, open in the wire, or other fault or interference.
White GPS icon	2 or less	Impossible to detect vehicle position	GPS function is normal. The satellite signals received by the GPS are too few to detect the vehicle position.
White GPS icon	3	Vehicle position detectable in 2 dimensions	The longitude and latitude of the vehicle position can be detected. (Less precise than detection in three dimensions)
Green GPS icon	4 or more	Vehicle position detectable in 3 dimensions (elevation displayed)	The longitude, latitude and the altitude of the vehicle position can be detected. (More precise than detection in two dimensions)

GPS Antenna
The GPS antenna amplifies and transmits the signals received from the satellites to the GPS receiver.

GPS Receiver and Clock
The GPS receiver is built into the navigation unit. It calculates the vehicle position by receiving the signal from the GPS antenna. The current time vehicle position and signal reception condition is transmitted from the GPS receiver to the navigation unit to adjust vehicle position.

Navigation Unit
The navigation unit calculates the vehicle position and guides you to the destination. The unit performs map matching correction, GPS correction, and distance tuning. It also controls the menu functions and the DVD-ROM drive, and interprets voice commands. With control of all these items, the navigation unit makes the navigation picture signal, then it transmits the signal to the navigation display and audio driving instructions to the audio unit.

Calculation of Vehicle Position
The navigation unit calculates the vehicle position (the driving direction and the current position) by receiving the directional change signals from the yaw rate sensor and the travel distance signals from the PCMs vehicle speed pulse (VSP) signal.

Map Matching Tuning
The map matching tuning is accomplished by indicating the vehicle position on the roads on the map. The map data transmitted from the DVD-ROM is checked against the vehicle position data, and the vehicle position is indicated on the nearest road. Map matching tuning does not occur when the vehicle travels on a road not shown on the map, or when the vehicle position is far away from a road on the map.

GPS Tuning
The GPS tuning is accomplished by indicating the vehicle position as the GPS's vehicle position. The navigation unit compares its calculated vehicle position data with the GPS vehicle position data. If there is large difference between the two, the indicated vehicle position is adjusted to the GPS vehicle position.

Distance Tuning
The distance tuning reduces the difference between the travel distance signal from the VSP and the distance data on the map. The navigation unit compares its calculated vehicle position data with the GPS vehicle position data. The navigation unit then decreases the tuning value when the vehicle position is always ahead of the GPS vehicle position, and it increases the tuning value when the vehicle position is always behind the GPS vehicle position.

Route Guidance
The navigation unit can calculate different routes to a selected destination. You have five options:

- Direct Route — Calculate a route that is the most direct.
- Easy Route — Calculate a route that minimizes the number of turns needed.
- Minimize Freeways — Calculate a route that avoids freeway travel. If that is not possible, keep the amount of freeway travel to a minimum.
- Minimize Toll Roads — Calculate a route that avoids, or minimizes travel on toll roads.
- Maximize Freeways — Calculate a route that uses freeways as much as possible.

Audio Guidance
The navigation unit transmits audio driving instructions before entering an intersection or passing a junction. The audio instructions come through the audio unit to the front speakers.

NOTE: The front speakers are muted whenever the navigation system is giving guidance commands, and all of the speakers are muted when the voice control system is being used.

DVD-ROM
The map data (including all scale rates) is stored in the DVD-ROM. The map data includes:

- Road distances, road widths, speed limits, traffic regulations, passing time at junction, distances to junctions, and the driving instructions for audio guidance.
- Latitude and longitude GPS.

(cont'd)

System Description (cont'd)

Audio Unit (Built in the navigation unit)
The audio unit receives the audio driving instructions from the navigation unit, and transmits the instructions through the front speakers even when the audio system is in use.

Navigation Display
The navigation display uses liquid crystal display (LCD). The LCD is a 6.5-inch-diagonal, thin film transistor (TFT), stripe type with 65,536 color, The color film and fluorescent light are laid out on the back of the liquid crystal film. The touch sensor on the front of the LCD consists of a touch sensitive resistive membrane with an infinite number of possible touch locations.

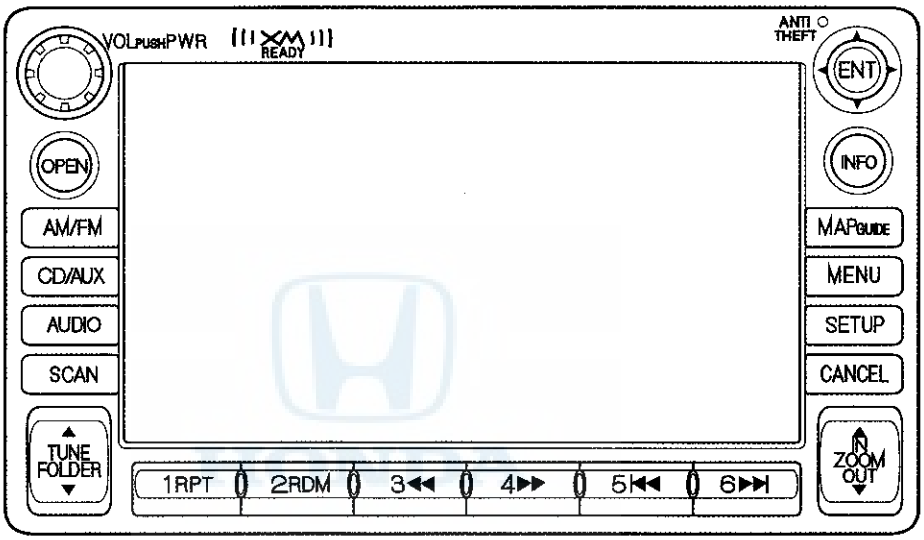

Microphone
The microphone (on the ceiling, near the front map light) receives voice commands and transmits them to the navigation unit for interpretation.

Navigation TALK Button
Activates the voice control system in the navigation unit to accept voice commands.

Navigation BACK Button
Returns the display to the previous screen (similar function as the CANCEL button).

Glossary
The following is a glossary of terms pertaining to the Voice Recognition Navigation System.

Item	Definition
Active noise cancellation (ANC)	The active noise cancellation system cancels some of the vehicle noise. This occurs in the 1,500—2,400 rpm range. Microphones detect the low frequency sound, and the system outputs a canceling sound from the audio speaker.
Address Book	The HFL system can import a copy of the phone book from and approved HFL compatible phone and display the imported phone book on the navigation screen as the address book. See the Owner's Manual for more information.
B-CAN	Body CAN Bus (see CAN)
Bread-crumbs (White dots)	Off road tracking dots that can be followed on the map to retrace your route back to a mapped (digitized) road. This function can be turned on/off in Setup screen 1.
CAN	Controller Area Network. This communication network allows processors in the vehicle to send/receive information. The fuel pulses used by the MID trip computer are received from the PCM using the F-CAN (Fast Controller Area Network) bus.
CPU	Central Processing Unit. The main device within the navigation unit that coordinates the rest of the electronic functions.
CSS	Countershaft (Output) Speed Sensor. This sensor reads the output shaft speed at the transmission and provides a speed pulse to the PCM.
Database	This consists of the Map data, and the POI (Points Of Interest) data stored on the DVD.
DBW	Drive By Wire. Allows electrical control of the throttle without the need of a mechanical linkage.
DCA	Detailed Coverage Area. Main metropolitan areas in the Lower 48 states, and Canada are mapped to this level. See the navigation system manual for a list of these areas.
DTC	Diagnostic Trouble Codes. Use the PGM Tester, or HDS tablet to obtain, and troubleshoot the cause of these codes.
Dead reckoning	The use of the speed signal, and yaw rate sensor to position the vehicle on the map even when tall buildings, or driving in a tunnel obscures the GPS signal.
Digitized road	A road that appears on the navigation screen. The road name appears at the bottom of the navigation screen. If the user drives off road, the navigation system displays Not on a digitized road, and after 1/2 mile, the bread-crumbs appear.
Disclaimer Screen	Screen containing cautionary information. It is meant to be read carefully, and acknowledged by the customer when using the navigation system.
DVD or DVD-ROM	Digital Versatile Disk. The navigation program and database resides on this disk. See the Navigation Owner's Manual for information on how to order a replacement or an update DVD.
ECM	Engine Control Module. Typically referred to as the ECM.
FAQ	Frequently Asked Questions. See the navigation system manual for a list of the customer FAQs, and troubleshooting information.
F-CAN	Fast CAN Bus (see CAN)
GA-NET	The GA-NET allows the audio unit to communicate with all the audio and navigation components in a vehicle. If there is an open in the GA-NET, components or the entire audio and navigation system may appear inoperative.
GPS	Global Positioning System. A network of 24 satellites in orbit around the earth. The navigation system can simultaneously receive signals from up to 12 satellites to accurately position the vehicle on the map.
HDS	Honda Diagnostic System. A hand held tablet PC used for diagnosing vehicle problems. This device can be used to obtain DTC codes for diagnosis of the navigation system and CAN related problems.
HFL	HandsFreeLink uses Bluetooth technology as a wireless link between it and an approved Bluetooth compatible cell phone. See the vehicle Owner's manual or Quick Start Guide for more information.
HIP (AcuraLink)	Honda Information Platform (see AcuraLink)
H/U	Head Unit. The audio unit in the dash.
Initialization	This refers to the period needed to re-acquire the GPS satellite orbital information whenever the navigation system power has been disconnected. This can take from 10 to 45 minutes.
Interface Dial	This control device consists of a rotating knob and the buttons surrounding it. This device allows control of the navigation, audio, and climate functions displayed on the screen.
Jog Dial	See interface dial.

(cont'd)

System Description (cont'd)

Item	Definition
LCD	Liquid Crystal Display (the navigation screen)
Map matching	The received GPS information allows the navigation system to position the vehicle on the map. Map matching has occurred if the map screen displays the current street name in the bottom-shaded area.
Mic	Abbreviation for the microphone used for receiving voice commands. It is located near the map light in the ceiling. The ANC circuit may also use it to check its tuning.
MID	Multi-Information Display
MW	Maneuver Window. While on-route to a destination, this window displays information about the next maneuver.
Navi	Abbreviation for the Navigation System.
Off-road tracking	See bread-crumbs.
Off route	This occurs when the user leaves mapped roads. Off road tracking dots (bread-crumbs) are displayed if the option is enabled in the setup menu. The user can use them to return to a mapped road. The bottom of the navigation screen displays not on a digitized road.
Outlying areas	These are rural areas that typically have only their main roads mapped. All other roads are shown in light brown for reference only, since they have not been verified.
Paired	Linking your cell phone to the HFL.
PC Card Slot	The PC Card (PCMCIA, type II) slot is for factory use only. Make sure that the sliding door is closed at all times, if opened, an error message is displayed on the screen.
PCM	Powertrain Control Module. This unit supplies the navigation system speed signal, also refered to as PCM.
PCMCIA	A computer industry defined term referring to the PC Card slot standard.
PIN	Personal Identification Number, a random 4 digit number created by the customer to protect personal information.
POI	Point Of Interest. These are the businesses, schools, etc. found under the places option on the main menu.
Polygon	Colored areas on the map screen denoting parks, schools, etc. See the Navigation System Manual Driving to Your Destination for a list of the assigned colors.
QWERTY	Keyboard layout resembling the typewriter keys. The keyboard layout can be changed to an alphabetical layout in the Setup mode.
SCM connector	The service check signal 2-pin connector used to put the navigation system into the diagnostic mode.
Security code	Code needed to activate the navigation system. You can get the security code from the iN by entering the navigation unit serial number. You can find the serial number on the diagnostic screens (unit check, Navi ECU), or on the underside of the navigation unit.
Tuning	A continual update of internal navigation system scaling factors. See the individual sensor tuning discussions under either System Description, or System Diagnostic Mode (see page 23-123).
Unverified streets	These streets have not been verified for turn restrictions, one-way, etc. They appear light brown on the map. You can enter address destinations in these areas, but depending on your Unverified Routing choice in setup, voice guidance may end at the last verified street closest to your destination.
USB	Universal Serial Bus. The USB is used for playing the compressed audio files (MP3, WMA, and AAC) on the external device through the audio unit.
Verified streets	These streets consist of the detailed metropolitan coverage areas, and all other inter-town connection roads. These roads are shown in black or red on the map. (interstates are red)
VP	Vehicle Position. When in map mode, this circular icon shows the vehicle position on the map.
VR	Voice Recognition. This allows voice control of many of the navigation functions. The hardware consists of the microphone, voice control switch (navigation TALK/BACK buttons), and the center speaker. See the overview for more information.
VSP	Vehicle Speed Pulse. This pulse signal coming from the PCM (via the CSS) is used to update the Vehicle position on the map. These pulses do not indicate direction (forward or backward). When in reverse, the navigation receives a signal and directs the VP to move backwards on the map.
XM	This device receives information from the XM satellites and passes XM audio information to the audio unit. In addition, traffic information is sent to the navigation unit.
Yaw sensor	This device is located in the navigation system control unit and senses the side-to-side twisting force generated when the vehicle turns. See a detailed description of how this sensor works in system description.

Diagnostic System Diagram

This diagram below shows an overview of the navigation diagnostic features starting at the center and working outward in layers. The diagram starts with the ignition switch to ON (II). From any of the navigation Map or Menu screens, press and simultaneously hold the keys Menu, Map, and Cancel.

Finally, the diagram shows the available diagnostic menu choices, starting at the bottom left, and moving clockwise. In most cases, do not clear or change settings in any diagnostic screen unless instructed to do so in the explanation, or by the factory. If the factory asks you to insert a PCMCIA memory card into the PC card Slot, then the features specified on the diagram with PC card are available.

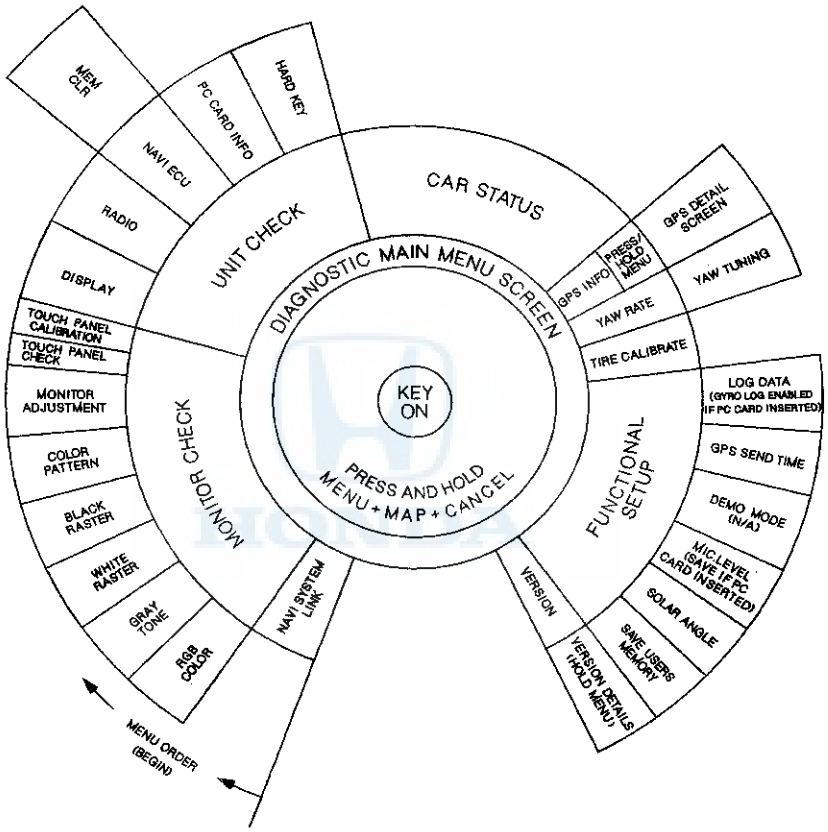

(cont'd)

System Description (cont'd)

Navigation System Connector Location

NOTE: Refer to the audio section for the connector B, E, and G inputs and outputs (see page 23-11).

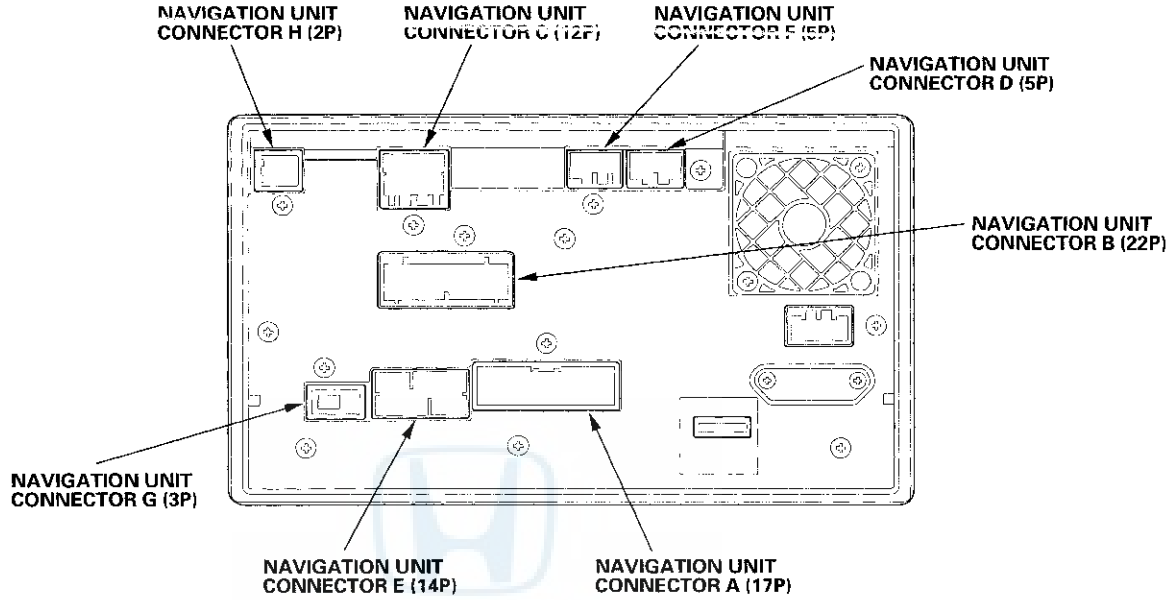

NAVIGATION UNIT CONNECTOR A (17P)

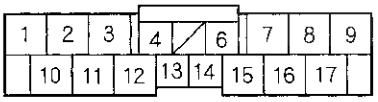

Wire side of female terminals

NAVIGATION UNIT CONNECTOR B (22P)

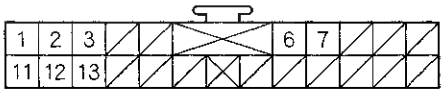

Wire side of female terminals

NAVIGATION UNIT CONNECTOR C (12P)

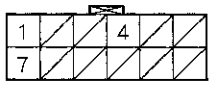

Wire side of female terminals

NAVIGATION UNIT CONNECTOR D (5P)

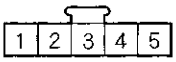

Wire side of female terminals

NAVIGATION UNIT CONNECTOR E (14P)

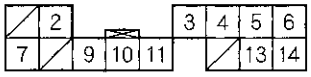

Wire side of female terminals

NAVIGATION UNIT CONNECTOR F (5P)

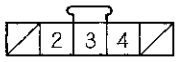

Wire side of female terminals

NAVIGATION UNIT CONNECTOR G (3P)

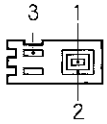

Terminal side of female terminals

NAVIGATION UNIT CONNECTOR H (2P)

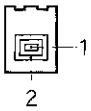

Terminal side of female terminals

Navigation Unit Inputs and Outputs for Connector A (17P)

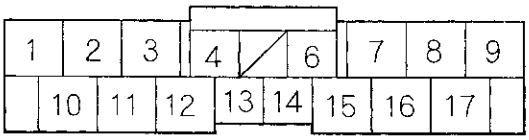

Wire side of female terminals

Navigation Unit Connector A (17P)

Terminal Number	Wire Color	Terminal Name	Description	Voltage (about)	Symptom
1	RED	ILL (−)	Ground for illumination light	With full dash lights brightness, 0 V	If open: When brightness = Auto, night mode for the display is inoperative when lights on. If short to ground: No change to display.
9	BLK	RADIO GND (Ground)	Ground for display unit	0 V	If open: No change to display. If short to ground: No change to display.
10	GRY	ILL (+) (Illumination positive)	Parking light on signal from dash and console lights	Light on = battery voltage, Lights off = 0 V	If open: When brightness = Auto, night mode for the display is inoperative when lights on. If short to ground: Blows fuse No. 14 (7.5 A) in under-dash fuse/relay box.
13	BLU	VSP (Vehicle speed pulse)	Vehicle speed pulse signal from PCM	Pulses 0—5 V: Average 2.5 V, when moving	If open: No vehicle speed pulses. Diagnostic screen Car Status, VSP Navi = 0. If short to ground: No vehicle speed pulses. Diagnostic screen Car Status, VSP Navi = 0.
17	WHT	+B (+B power source)	Continuous power source	Battery voltage	If open: Screen completely off (no backlight visible). If short to ground: Blows fuse No. 23 (10 A) in the under-hood fuse/relay box.

(cont'd)

System Description (cont'd)

Navigation Unit Inputs and Outputs for Connector C (12P)

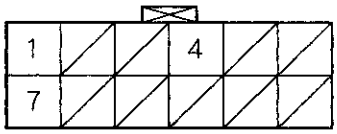

Wire side of female terminals

Navigation Unit Connector C (12P)

Terminal Number	Wire Color	Terminal Name	Description	Voltage (about)	Symptom
1	WHT	+B BACK UP	Continuous power source	Battery voltage	If open: Display picture goes out (display back light still on). NOTE: System will reboot to enter code screen. If short to ground: Blows fuse No. 23 (10 A) in the under-dash fuse/relay box.
4	BLK	GND	Ground for navigation unit	0 V	If open: No effect on system. If short to ground: No effect on system.
7	BRN	BACK LT—	Reverse signal of select laver from Multiplex integrated Control unit	In reverse, battery voltage: Otherwise 0 V	If open: Navigation never sees the reverse signal and back-up camera does not come on when in reverse. Diagnostic screen Car Status, Back = 0. If short to ground: Blows fuse No. 10 (7.5 A) in the under-dash fuse/relay box.

Navigation Unit Inputs and Outputs for Connector D (5P)

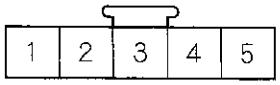

Wire side of female terminals

Navigation Unit Connector D (5P)

Terminal Number	Wire Color	Terminal Name	Description	Voltage (about)	Symptom
1	BRN	MIC GND	Ground for microphone signal	0 V	If open: No microphone signal shown in diagnostics: Navi System Link and Functional Set up Mic Level. If short to ground: No effect on voice recognition.
2	YEL	MIC SIG+	Microphone output signal positive	4—5 V (with navigation TALK button pressed)	If open: No microphone signal shown in diagnostic screens: Navi System Link and Functional Setup Mic Level. If short to ground: No microphone signal shown in diagnostic screens: Navi System Link and Functional Setup Mic Level.
3	GRY*	MIC SH	Shield for terminal No. 1, 2, 5	0 V	If open: No effect on voice recognition. If short to ground: No effect on voice recognition.
4	GRN	NAVI GUIDE	Steering wheel switch output	4—5 V (navigation TALK button pressed) 2.5—3 V (navigation BACK button pressed)	If open: Steering wheel navigation TALK, and navigation BACK buttons do not work. If short to ground: Steering wheel navigation TALK, and navigation BACK buttons do not work.
5	ORN	MIC ADPT	Control signal for microphone	0 V	If open: No effect on voice recognition. If short to ground: No effect on voice recognition.

*: The shielded wires have a heat-shrunk tube insulating the outside of the wire. The color of the insulating tube, typically black or dark gray, may not match the color of the wire listed on the schematic.

(cont'd)

System Description (cont'd)

Navigation Unit Inputs and Outputs for Connector F (5P)

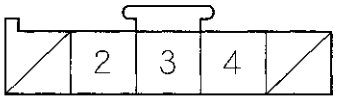

Wire side of female terminals

Navigation Unit Connector F (5P)

Terminal Number	Wire Color	Terminal Name	Description	Voltage (about)	Symptom
2	BLU	AC CK	Time set sync signal	0-battery voltage pulses	If open: A/C voice control does not work. If short to ground: A/C voice control does not work.
3	YEL	AC SI	A/C input signal	0-battery voltage pulses	If open: voice control does not work. If short to ground: Voice control does not work.
4	RED	AC SO	A/C output signal	0-battery voltage pulses	If open: A/C voice control does not work. If short to ground: A/C voice control does not work.

HONDA

Navigation Unit Inputs and Outputs for Connector H (2P)

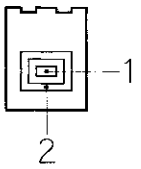

Terminal side of female terminals

Navigation Unit Connector H (2P)

Terminal Number	Wire Color	Terminal Name	Description	Voltage (about)	Symptom
1	——	GPS	GPS signal (5 V in, GPS signal out)	5 V	If open: GPS icon on screen is white, system links screen ANT shows NG. If short to ground: GPS icon on screen is white, system links screen ANT shows NG.
2	——	GPS SH	Shield for terminal No. 1	0 V	If open: GPS icon on screen is white, system links screen ANT shows NG. If short to ground: No effect on system.

HONDA

Navigation System ('06-08 models)

Circuit Diagram

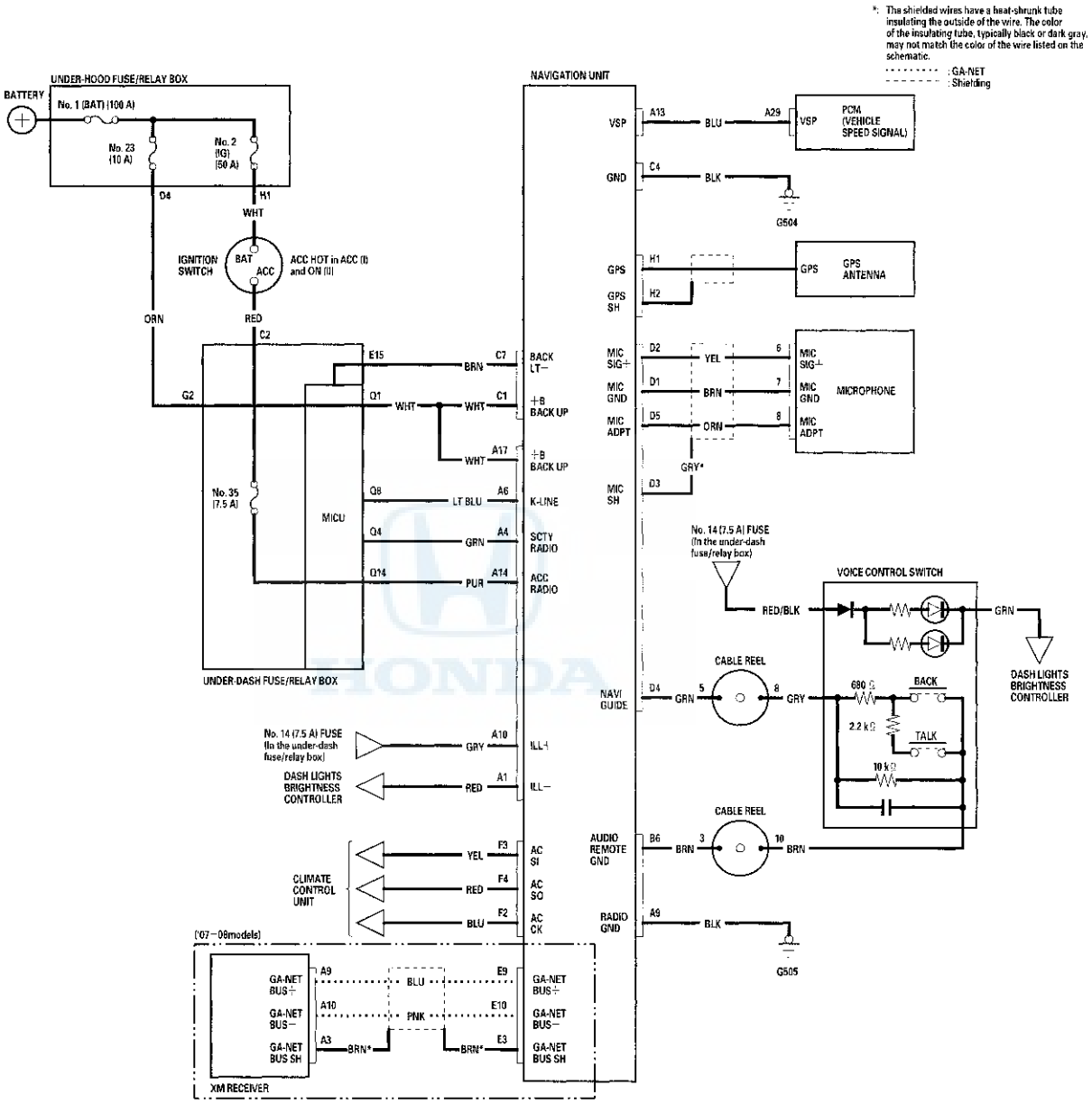

Symptom Troubleshooting

No picture is displayed

NOTE:
- Check the vehicle battery condition first.
- Make sure that the correct DVD color and version are installed.
- Check any official Honda service website for more service information about the navigation system.
- For problems with the rearview camera, do the rearview camera does not come on or work properly troubleshooting.
- Check the connectors for poor connections or loose terminals.
- Before troubleshooting, make sure you have the navigation system anti-theft code.

1. Check the No. 23 (10 A) fuse in the under-hood fuse/relay box and No. 35 (7.5 A) fuse in the under-dash fuse/relay box, and reinstall the fuse if it is OK.

   Is the fuse OK?

   YES—Go to step 2.

   NO—Replace the fuse, and recheck.■

2. Turn the ignition switch to ON (II).

3. Operate the radio and listen to the audio.

   Can you hear the audio?

   YES—Go to step 4.

   NO—Refer to audio system troubleshooting.■

4. Turn the ignition switch to LOCK (0).

5. Remove the navigation unit (see page 23-143).

6. Measure the voltage between navigation unit connector A (17P) terminal No. 17 and body ground.

NAVIGATION UNIT CONNECTOR A (17P)

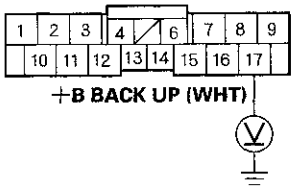

Wire side of female terminals

Is there battery voltage?

YES—Go to step 7.

NO—Repair open in the wire between the under-dash fuse/relay box and the navigation unit.■

7. Turn the ignition switch to ON (II).

8. Measure the voltage between navigation unit connector A (17P) terminal No. 14 and body ground.

NAVIGATION UNIT CONNECTOR A (17P)

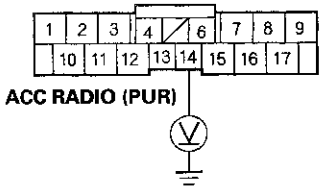

Wire side of female terminals

Is there battery voltage?

YES—Go to step 9.

NO—Repair open in the wire between the under-dash fuse/relay box and the navigation unit.■

(cont'd)

Symptom Troubleshooting (cont'd)

9. Measure the voltage between navigation unit connector A (17P) terminal No. 9 and body ground, and between navigation unit connector C (12P) terminal No. 4 and body ground.

NAVIGATION UNIT CONNECTOR A (17P)

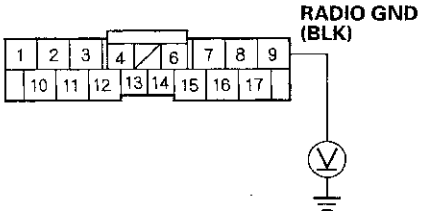

Wire side of female terminals

NAVIGATION UNIT CONNECTOR C (12P)

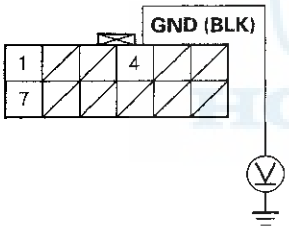

Wire side of female terminals

Is there less than 0.1 V?

YES—Replace the navigation unit (see page 23-143). ■

NO—Repair open in the wire between the navigation unit and body ground (G504) (see page 22-26), (G505) (see page 22-28). ■

Picture has lines/rolls/other issues or is an odd color

NOTE:
- Check the vehicle battery condition first.
- Make sure that the correct DVD color and version are installed.
- Check any official Honda service website for more service information about the navigation system.
- Check the navigation screen settings for brightness, contrast, black level and the color screen for map color and menu color.
- Check the connectors for poor connections or loose terminals.
- Before troubleshooting, make sure you have the navigation and audio system anti-theft codes.

1. Check for electronic aftermarket accessories (possibly hidden) mounted near the navigation unit.

   Are there any electronic accessories?

   YES—Disable the accessories, and recheck. ■

   NO—Go to step 2.

2. Turn the ignition switch to ON (II).

3. Start up the navigation picture.

   Is the picture scrolling horizontally (left to right or right to left)?

   YES—Go to step 5.

   NO—Go to step 4.

4. Go into the Diagnostic mode and use RGB Color diagnostic under Monitor Check (see page 23-124).

   Are the red, green, and blue colored circle shown?

   YES—Go to step 5.

   NO—Replace the navigation unit (see page 23-143). ■

5. Turn the ignition switch to LOCK (0), then turn to ON (II), and observe the navigation picture.

   Did the image improve?

   YES—Check for sources of electrical noise, such as poor battery connection, alternator, defective battery, aftermarket accessories or cell phone, and poor pin fits at the navigation unit. ■

   NO—Replace the navigation unit (see page 23-143). ■

Navigation display buttons do not work or respond properly

NOTE:
- Check the vehicle battery condition first.
- Always make sure that the correct DVD color and version are installed.
- Check any official Honda service website for more service information about the navigation system.
- Always check the connectors for poor connections or loose terminals.
- Before troubleshooting, make sure you have the navigation and audio system anti-theft codes.

1. Turn the ignition switch to ON (II).

   Does the navigation display turn on?

   YES—Replace the navigation unit (see page 23-143). ■

   NO—Refer to troubleshooting for no picture is displayed (see page 23-107). ■

Symptom Troubleshooting (cont'd)

GPS icon is white or not shown

NOTE:
- Check the vehicle battery condition first.
- Make sure the vehicle is parked outside and away from buildings.
- Refer to GPS Information (see page 23-130) for realtime satellite reception display.
- Check for window tinting above the GPS antenna and any non-OEM accessories mounted near the navigation unit or GPS antenna.

1. Check for metallic window tint on the windshield and electronic aftermarket accessories (possibly hidden) mounted near the GPS antenna or the navigation unit.

   Is there metallic window tint or electronic accessories?

   YES—Remove tint or the accessories, and recheck. ■

   NO—Go to step 2.

2. Go into the Diagnostic Menu and use the Navi System Link test (see page 23-124) to check the GPS antenna.

   Is the GPS Ant icon red?

   YES—Use the Navi ECU test under Unit Check (see page 23-127) to check for a kinked, crushed, or disconnected GPS antenna wire. If necessary, try a known-good GPS antenna. If icon is still red, replace the navigation unit. ■

   NO—Check that nothing is blocking the GPS antenna located behind the gauge assembly and recheck. Substitute a known-good navigation unit (see page 23-143), and recheck. ■

Voice guidance cannot be heard, is broken up, or there is static

NOTE:
- Check the vehicle battery condition first.
- Make sure that the correct DVD color and version are installed.
- Check any official Honda service website for more service information about the navigation system.
- Check that the volume setting and voice feedback are turned ON.
- Check the connectors for poor connection or loose terminals.
- Before troubleshooting, make sure you have the navigation system 4-digit anti-theft code.
- After troubleshooting, enter the navigation system anti-theft code.

1. Press the display unit SET-UP button.

2. Check the volume setting for the navigation system.

   Is it set to OFF?

   YES—Set the volume to an audible level. ■
   NO—Go to step 3.

3. Check the radio operation.

   Can you hear the radio?

   YES—Go to step 4.
   NO—Troubleshoot the audio system. ■

4. Go into the Diagnostic Menu and use the Navi System Link test (see page 23-124) to check the radio.

   Is the Radio icon red?

   YES—Troubleshoot the audio system. ■
   NO—Go to step 5.

5. Test the voice control switch (see page 23-144).

   Is voice control switch OK?

   YES—Replace the navigation unit (see page 23-143). ■
   NO—Replace the voice control switch (see page 23-145). ■

Voice control does not work/respond

NOTE:
- Check the vehicle battery condition first.
- Make sure that the correct DVD color and version are installed.
- Check any official Honda service website for more service information about the navigation system.
- Check the connector for poor connection or loose terminals.
- Before troubleshooting, make sure you have the navigation system 4-digit anti-theft code.
- After troubleshooting, enter the navigation system anti-theft code.

Before assuming that a voice complaint is hardware related, ensure that the voice control system is being operated correctly.

- Make sure you are on the correct screen when trying to issue a voice command. For instance, the command "Find the nearest Italian Restaurant" only works on a Map screen (See the Navigation System Manual for a complete list of allowed voice commands for the information being displayed.).
- Close the windows, moonroof, and doors.
- Set the fan speed to low (1 or 2).
- Adjust the air flow from the air conditioning vents so that they do not blow against the microphone on the ceiling.
- Pause after pressing the navigation TALK button, then give a voice command clearly in a natural speaking voice. If the system cannot recognize your command, speak louder.
- If the microphone picks up voices other than yours, the system may not interpret your voice commands correctly.
- If you speak a command with something in your mouth, or your voice is too husky, the system may misunderstand your command.
- Compare the system operation with a known-good vehicle. Have more than one person test the system operation. If the known-good vehicle performs the same, it is a characteristic of the system.

1. Turn the ignition switch to ON (II).

2. Go into the Diagnostic Menu and use the Mic Level test under Functional Setup (see page 23-135) to check the operation of the navigation TALK and navigation BACK buttons.

   Are the navigation TALK and navigation BACK buttons operational?

   YES—Go to step 10.

   NO—Go to step 3.

3. Turn the ignition switch to LOCK (0).

4. Do the voice control switch test (see page 23-144).

   Is the voice control switch OK?

   YES—Go to step 5.

   NO—Replace the voice control switch.

5. Disconnect the cable reel 20P connector and navigation unit connector D (5P).

6. Check for continuity between body ground and navigation unit connector D (5P) terminal No. 4.

NAVIGATION UNIT CONNECTOR D (5P)

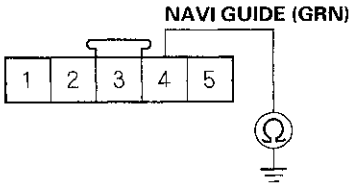

Wire side of female terminals

Is there continuity?

YES—Repair short to body ground in the wire between the navigation unit and voice control switch, or replace the cable reel. ■

NO—Go to step 7.

(cont'd)

Symptom Troubleshooting (cont'd)

7. Check for continuity between navigation unit connector D (5P) terminal No. 4 and cable reel 20P connector terminal No. 8.

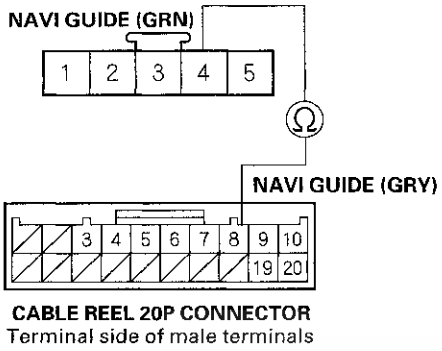

Is there continuity?

YES—Go to step 8.

NO—Repair open in the wire between the navigation unit and the voice control switch, or replace the cable reel.■

8. Disconnect navigation unit connector B (22P).

9. Check for continuity between navigation unit connector B (22P) terminal No. 6 and cable reel 20P connector terminal No. 10.

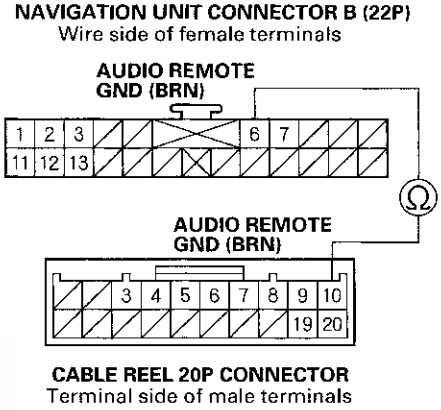

Is there continuity?

YES—Replace the navigation unit.■

NO—Repair open in the wire between the navigation unit and the voice control switch, or replace the cable reel.■

10. Use the Mic Level diagnostic under Functional Setup (see page 23-135) to check the operation of the microphone.

Is the microphone operational?

YES—Check the operation of the voice control system (see the Navigation System Manual).■

NO—Go to step 11.

11. Turn the ignition switch to LOCK (0).

12. Disconnect the microphone 10P connector (see page 23-145).

13. Disconnect navigation unit connector D (5P).

14. Check for continuity between body ground and navigation unit connector D (5P) terminals No. 2 and No. 5 individually.

NAVIGATION UNIT CONNECTOR D (5P)

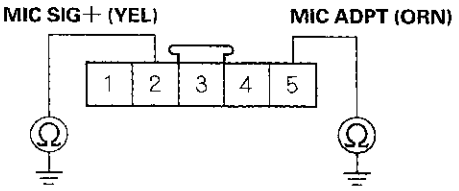

Wire side of female terminals

Is there continuity?

YES—Short to body ground in the wire(s) between the navigation unit and the microphone. Replace the affected shielded harness.■

NO—Go to step 15.

15. Check for continuity between navigation unit connector D (5P) according to the table.

From terminal	To terminals
D2	D3, D5
D3	D5

NAVIGATION UNIT CONNECTOR D (5P)

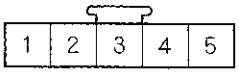

Wire side of female terminals

Is there continuity between any of the terminals?

YES—Short in the wires between the navigation unit and the microphone. Replace the affected shielded harness.■

NO—Go to step 16.

16. Check for continuity between navigation unit connector D (5P) and microphone 10P connector according to the table.

Navigation unit connector	Microphone connector	Wire color
D1	7	BRN
D2	6	YEL
D5	8	ORN

NAVIGATION UNIT CONNECTOR D (5P)

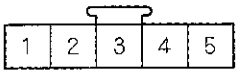

Wire side of female terminals

MICROPHONE 10P CONNECTOR

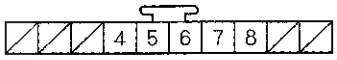

Wire side of female terminals

Is there continuity?

YES—Substitute a known-good microphone (see page 23-145), then reconnect all of the connectors, and recheck. If the symptom/indication goes away, replace the original microphone. If the symptom/indication is still present, replace the navigation unit (see page 23-143).■

NO—Open in the wire(s) between the navigation unit and microphone. Replace the affected shielded harness.■

Symptom Troubleshooting (cont'd)

Vehicle position icon constantly leaves road, moves erratically, or is displayed very far from actual vehicle position

NOTE:
- Check the vehicle battery condition first.
- Make sure that the correct DVD color and version are installed.
- Check any official Honda service website for more service information about the navigation system.
- Check for aftermarket accessories.

1. Check the GPS icon on the navigation picture.

   Is the GPS icon on the map screen?

   YES—Do the troubleshooting for GPS icon is white or not shown (see page 23-110).■

   NO—Go to step 2.

2. Go into the Diagnostic Menu, and use the Yaw Rate test (see page 23-132) to check the yaw rate sensor.

3. Go into the Diagnostic Menu and use the Car Status test (see page 23-129) to check the vehicle speed pulse.

   Are the yaw rate sensor and vehicle speed pulse OK?

   YES—The problem may be a normal characteristic. Check to see if the problem occurs in the same place. If it does, the problem could be in the database. Compare to a known-good vehicle under the same conditions. If you can duplicate the problem, report it. Refer to the Customer Assistance section of the Navigation User's Guide, "Reporting Errors".■

   NO—If the problem is the yaw rate sensor, replace the navigation unit (see page 23-143). If the problem is the vehicle speed pulse, troubleshoot the vehicle speed signal circuit.■

Vehicle icon wanders across the map when driving (does not follow a displayed road) or map or vehicle ICON spins

NOTE:
- Check the vehicle battery condition first.
- This symptom is usually caused by a defective yaw rate sensor. Perform this diagnostic when the vehicle is cold and warm.
- Also refer to symptom troubleshooting for GPS icon is white or not shown (see page 23-110).

1. Go into the Diagnostic Menu and use the Yaw Rate test (see page 23-132).

   Are the values correct?

   YES—The system is OK.■

   NO—Replace the navigation unit (see page 23-143).■

DVD read error messages

NOTE:
- Check the vehicle battery condition first.
- Make sure that the correct DVD color and version are installed.
- Check any official Honda service website for more service information about the navigation system.
- Check the Navigation System Manual for a list of common DVD screen error messages and the probable cause.
- Go into the Diagnostic Menu, and use the Car Status test (see page 23-129) to check the status of the display.

1. Check the DVD-ROM reading surface for scratches.

   Are there scratches?

   YES—Replace the DVD-ROM.■

   NO—If the problem occurs occasionally when the system is cold, this is normal. If the problem occurs frequently when driving, replace the navigation unit (see page 23-143).■

System always comes up in in-line diagnostic mode

1. When a navigation unit is powered up for the first time at the factory, the factory diagnosis screen (In Line Diag) appears. Normally the factory performs the steps necessary to verify proper operation and terminate the factory diagnostic. Until the proper confirmation sequence is performed, the screen will appear every time the vehicle is started.

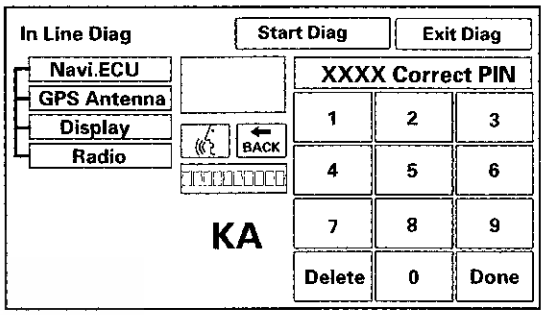

2. Follow the steps to prevent the screen from showing up in the future:

   - Hold down the buttons (Menu+Map/Guide+Cancel) for about 5 seconds (the Select Diagnosis Items screen appears).
   - Hold down the Map/Guide button for 5—10 seconds (A screen with a Complete button, appears).
   - Touch Complete, and then the Return button (the system may re-boot).
   - Restart the vehicle, and confirm normal operation by completing the PDI of the navigation system Service Bulletin.

Symptom Troubleshooting (cont'd)

Display day/night mode does not work or does not work properly

NOTE:
- Check the vehicle battery condition first.
- Check the connectors for poor connection or loose terminals.
- Before troubleshooting, get the navigation system anti-theft code.
- After troubleshooting, enter the navigation system anti-theft code.
- Full brightness on the instrument panel brightness control with the head lights turned on causes the system to stay in the day mode, even when the lights are on.

1. Make sure the instrument panel brightness control is not on full brightness. Turn the headlights on and adjust the dash brightness to the middle range.

2. Change the day/night mode under Set-up to AUTO, and recheck.

   Does the display change to day and night modes when turning the headlights on and off?

   YES—The system is OK at this time.■

   NO—Go to step 3.

3. Go into the Diagnostic Menu and use the Car Status test to check for an ILL signal (see page 23-129).

   Is the ILL signal OK?

   YES—Replace the navigation unit (see page 23-143). ■

   NO—Check the ILL+ circuit between the navigation unit and the No. 14 (7.5 A) fuse in the under-dash fuse/relay box.■

System locks up or freezes constantly

NOTE:
- Check the vehicle battery condition first.
- Make sure that the correct DVD color and version are installed.
- Check any official Honda service website for more service information about the navigation system.

1. Start the engine and turn the ignition switch to LOCK (0), then turn the ignition switch to ON (II).

   Does the system reboot?

   YES—The system is OK at this time.■

   NO—Check the DVD for scratches or damage, and the navigation unit for water damage. If OK, go into the Diagnostic Menu and do all of the Unit Check tests (see page 23-127). Also check for low battery charge or poor charging system performance.■

Navigation display stays on with ignition switch in LOCK (0)

NOTE:
- Check the connectors for poor connections or loose terminals.
- Before troubleshooting, get the navigation system anti-theft code, then write down the audio presets.
- After troubleshooting, re-enter the anti-theft code, and re-initialize the navigation system, then enter the audio presets.
- Check for aftermarket accessories that use the same power circuit. A feedback can cause this problem.

1. Remove the key from the ignition.

   Does the navigation screen stay on?

   YES—Go to step 2.

   NO—The system is OK at this time.■

2. The vehicle may have been used as a demonstration vehicle at an event like an auto show. In these events, power is often jumpered to the navigation system so that the ignition key is not needed in the vehicle. At the end of the show, the jumper wire may not have been removed. Check the navigation unit connector A (17P) for a non-factory jumper wire in series with the factory cable.

   Is there a jumper wire?

   YES—Remove the jumper wire, and re-test. Return the jumper wire to Tech Line.■

   NO—Go to step 3.

3. Check if the audio unit works.

   Does the audio unit work with the ignition switch is in LOCK (0)?

   YES—Troubleshoot the ACC circuit for a short to power with another circuit.■

   NO—Replace the navigation unit (see page 23-143). ■

Navigation cannot control audio system

NOTE:
- Check the vehicle battery condition first.
- Verity that the correct navigation unit is installed for this model. Go into the Diagnostic mode and use Version (see page 23-137).
- Check for connectors for poor connections or loose terminals.
- Before troubleshooting, make sure you have anti-theft codes for the navigation system.
- After troubleshooting, enter the anti-theft codes for the navigation system.
- Make sure that the correct navigation DVD color and version are installed.
- Inspect the navigation DVD for dirt or damage.
- Check any official Honda service website for more service information about the navigation system.

1. Make sure the anti-theft code for the navigation system is entered.

2. Go into the Diagnostic Menu and use the Navi System Link test (see page 23-124).

   Is the Radio icon red?

   YES—Do the troubleshooting for the voice guidance cannot be heard (see page 23-110).■

   NO—Go to step 3.

3. Substitute a known-good navigation unit (see page 23-143), and recheck.

   Can the navigation control audio?

   YES—Replace the navigation unit (see page 23-143). ■

   NO—Do the audio system troubleshooting.■

Symptom Troubleshooting (cont'd)

Navigation cannot control HVAC by voice command

NOTE:
- Make sure that the correct DVD color and version are installed.
- Check any official Honda service website for more service information about the navigation system.
- Check the connectors for poor connections or loose terminals.
- Before troubleshooting, get the navigation system anti-theft code.
- After troubleshooting, enter the navigation system anti-theft code.
- Verify that the correct navigation unit is installed for this model. Go into the Diagnostic Menu and use Version (see page 23-137).

1. Go into the Diagnostic Menu and use the Navi System Link test (see page 23-124).

   Is the Air-con icon red?

   YES—Do the climate control system troubleshooting.■

   NO—Replace the navigation unit (see page 23-143). ■

Navigation cannot control XM radio

- Check the vehicle battery condition first.
- Make sure that the correct DVD color and version are installed.
- Check any official Honda service website for more service information about the navigation system.

1. Substitute a known-good navigation unit (see page 23-143), and recheck.

   Can the navigation control the XM radio?

   YES—Replace the navigation unit (see page 23-143). ■

   NO—Do the audio system troubleshooting.■

Navigation frequently asks for anti-theft code and/or needs GPS initialization

NOTE:
- This is often caused by a loss of battery power, a low or poor battery condition, or a poor ground.
- Make sure that the correct DVD color and version are installed.
- Check any official Honda service website for more service information about the navigation system.

1. Measure the voltage between navigation unit connector A (17P) terminal No. 17 and body ground.

NAVIGATION UNIT CONNECTOR A (17P)

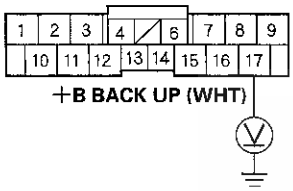

Wire side of female terminals

Is there battery voltage?

YES—Go to step 2.

NO—Repair open in the wire between the under-dash fuse/relay box and the navigation unit.■

2. Turn the ignition switch to ON (II).

3. Measure the voltage between navigation unit connector A (17P) terminal No. 14 and body ground.

NAVIGATION UNIT CONNECTOR A (17P)

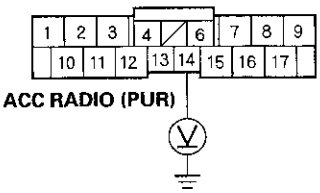

Wire side of female terminals

Is there battery voltage?

YES—Go to step 4.

NO—Repair open in the wire between the under-dash fuse/relay box and the navigation unit.■

(cont'd)

Symptom Troubleshooting (cont'd)

4. Measure the voltage between navigation unit connector A (17P) terminal No. 9 and body ground, and between navigation unit connector C (12P) terminal No. 4 and body ground.

NAVIGATION UNIT CONNECTOR A (17P)

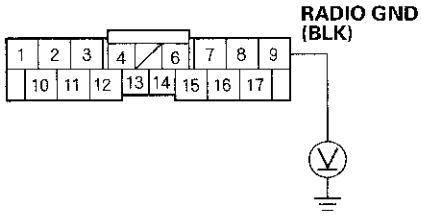

Wire side of female terminals

NAVIGATION UNIT CONNECTOR C (12P)

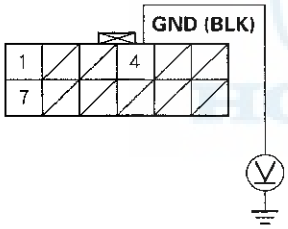

Wire side of female terminals

Is there less than 0.1 V?

YES—Replace the navigation unit (see page 23-143). ■

NO—Repair open in the wire between the navigation unit and body ground (G504, G505). ■

OPEN/CLOSE function of the display does not work

NOTE:
- Check the vehicle battery condition first.
- If the display's Open/Close button does not work, you must manually open the display to obtain the customer's navigation DVD, audio CD, and PC card (see page 23-142).

1. Press the OPEN/CLOSE button.

   Does the display open and/or close normally?

   YES—The system is OK at this time. ■

   NO—Replace the navigation unit (see page 23-143). ■

Navigation display will not close

NOTE: Check the vehicle battery condition first.

1. Check the CD slot. Look for foreign objects, a stuck CD, a broken or sticking slot.

   Is the CD slot OK?

   YES—Go to step 2.

   NO—Replace the navigation unit (see page 23-143). ■

2. Check the PC card.

   Is the PC card fully seated?

   YES—Go to step 3.

   NO—Reseat the card or remove it. If it still won't close, replace the navigation unit (see page 23-143). ■

3. Press the OPEN/CLOSE button.

   Does the display open and/or close normally?

   YES—The system is OK at this time. ■

   NO—Replace the navigation unit (see page 23-143). ■

Navigation display does not open or opens part way

NOTE: Check the vehicle battery condition first.

1. Press the OPEN/CLOSE button.

   Does the unit beep?

   YES—Go to step 2.

   NO—Replace the navigation unit (see page 23-143). ■

2. Press the OPEN/CLOSE button.

   Does the display open normally?

   YES—The system is OK at this time. ■

   NO—Replace the navigation unit (see page 23-143). ■

Navigation System ('06-08 models)

Symptom Troubleshooting (cont'd)

Navigation system will not accept security code

NOTE:
- Check the vehicle battery condition first.
- The system will not operate without the 4-digitsecurity (anti-theft) code. Follow the this procedure. (After 10 consecutive tries, you must cycle the key to continue trying)
- The Navigation System Diagnosis and Core Return Form is available online, under Job aids, and can be printed out for recording this information. This information will help the Reman facility determine what caused the failure.
- Check the connectors for poor connections or loose terminals.
- Before troubleshooting, make sure you have the anti-theft codes for the navigation system.
- Verify that the correct navigation unit is installed for this model. Go into the Diagnostic mode and use Version (see page 23-137).
- Make sure that the correct navigation DVD color and version are installed.
- Check any official Honda service website for more service information about the navigation system.

1. Go into the System diagnosis menu (see page 23-127), select Unit check, and then Navi ECU. A brief diagnostic runs for 20 seconds, and the serial number is displayed.

   Is the serial number displayed?

   YES—Go to step 4.

   NO—Go to step 2.

2. Remove the navigation unit (see page 23-143).

3. Check the serial number on the label on the under side of the navigation unit.

   Is the serial number conf irmed on the under side of the navigation unit?

   YES—Go to step 4.

   NO—Replace the navigation unit (see page 23-143). ■

4. Using the serial number, look up the navigation security code in the Interactive Network. (click: Service, Vehicle Information, Anti-Theft code Inquiry, and then select Navigation from the Product drop down box). Enter the serial number.

   Is a 4-digit code displayed on the screen?

   YES—Go to step 5.

   NO—Call the Warranty Department to obtain the code (the telephone number is in the PDI service bulletin). Then go to step 5.

5. Check that the obtained code works to bypass the code screen in the navigation system.

   Does the code work?

   YES—The system is OK at this time. Return the vehicle to the customer and give them the anti-theft code. ■

   NO—Go to step 6.

6. Try entering four zeros (0000) in place for the code.

   Do the four zeros work to bypass the code screen?

   YES—Replace the navigation unit (see page 23-143), and enter "Security code is 0000" in the problem description field of the core return form. ■

   NO—Replace the navigation unit, and enter "Won't take security code" (as proof, enclose the sticker that contains the Serial number and the Code) in the problem description field of the core return form. ■

The Acura Globe Screen (not the Honda Globe Screen) appears every time the vehicle is started

NOTE: The navigation DVD and the navigation unit are correct for the vehicle, but earlier and possibly later versions of the navigation software may have been installed. When this happens, the software may not be recognized by the navigation unit, and could cause the navigation unit to revert to an Acura model profile.

1. Remove the navigation unit (see page 23-143). and verify that the part number printed on the navigation unit label is the correct one for the year/model vehicle you are working on.

   Is the correct navigation unit installed based on the part number?

   YES—Go to step 2.
   NO—Replace the navigation unit with the correct unit for the year/model vehicle you are working on.■

2. Reinstall the navigation unit.

3. Remove the navigation DVD.

4. Note the software version marked on the navigation DVD label and verify if it is the correct version for the vehicle year/model you are working on by checking any official Honda service website for more service information about the navigation system and navigation software.

   Is the software version marked on the navigation DVD label the correct one for the vehicle year/model you are working on?

   YES—Replace the navigation unit (see page 23-143). ■
   NO—Go to step 5.

5. Obtain the correct version DVD (see page 23-82), and install it.

   Does the navigation system boot-up with the Honda Globe Screen?

   YES—The problem is resolved, troubleshooting is complete.■
   NO—The system still shows an Acura Globe Screen. Replace the navigation unit (see page 23-143).■

System Diagnostic Mode

Start-up procedure and Diagnosis Menu

1. Turn the ignition switch to ON (II).

   Press and hold the Menu, the Map/Guide, and the Cancel buttons for about 3 seconds. The display screen then goes directly to the Diagnostic Menu.

DIAGNOSTIC MENU SCREEN

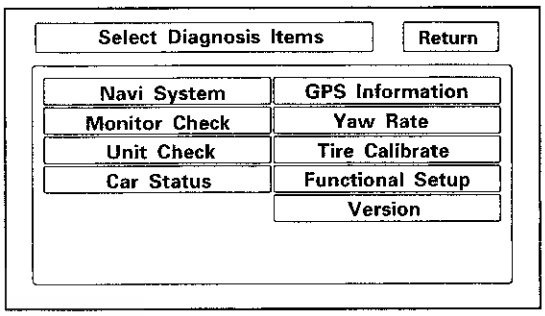

2. After the display changes to the Diagnostic Menu, select the item you want to check, and the test begins. To return to the previous screen, select Return.

   - Navi System (Link)
   - Monitor Check
   - Unit Check
   - Car Status
   - GPS Information
   - Yaw Rate
   - Tire Calibrate
   - Functional Setup
   - Version

(cont'd)

System Diagnostic Mode (cont'd)

Navi System Link

- This diagnostic step tests the cables connecting the navigation components. Ensure that the ignition switch is in the ON (II) position. When the diagnosis begins, you hear a bong sound. The system is in a Detecting mode, and is waiting for all the items in white to be tested. This includes the voice control switch (navigation TALK/BACK buttons), and the microphone. Press the navigation TALK button on the steering wheel, and in a normal voice, say "testing". The Talk indicator on the screen should turn green, and the voice level indicator should move to at least the 6th bar to pass. Next, press the navigation BACK button. The Cancel indicator should turn green.
- If all of the communication lines connecting the system components, and the navigation TALK/BACK buttons/microphone check out OK (all block diagram items green), then the OK indicator turns green.
- If there is a problem with the system, the faulty system component item turns red, and the screen shows NG in red. Use the troubleshooting index, and other diagnostic screens to help locate the problem.
- The indicator on the screen may not change until you cycle the ignition switch. After repairing the affected cable or system, repeat this diagnostic.

  NOTE: Green boxes and green OK indicate that the communications lines (cables) are intact. This diagnostic does not necessarily imply that the individual components are functioning properly. For instance, the GPS antenna wire may be crushed, but still show as green. A road test, or other diagnostic may be necessary to find the problem.

- Select Return to return to the Diagnostic Menu, or the Exit Diag button to exit.

  NOTE: The Mic Level indicator must reach the 6th bar or greater to pass the test.

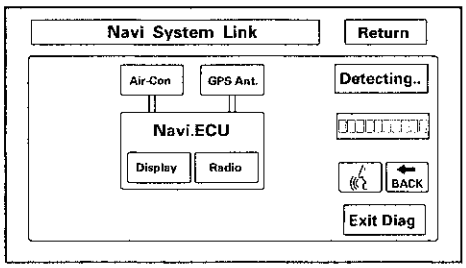

Monitor Check

Overview of navigation display:

The illumination input from the gauge brightness control provides back lighting for the buttons surrounding the screen.

These screens help you troubleshoot the navigation display. Select the item you want to troubleshoot, and follow the diagnostic instructions.

- RGB Color
- Gray Tone
- White Raster
- Black Raster
- Color Pattern
- Monitor Adjustment
- Touch Panel Check
- Touch Panel Calibration

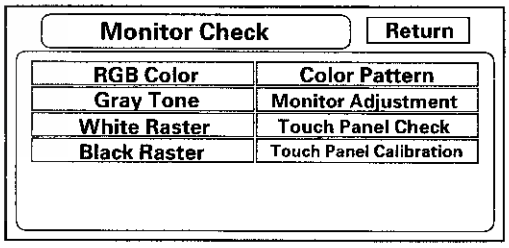

RGB Color
This screen verifies that the navigation display is receiving the video (R, G, B and Composite sync) signals properly. The three primary colors should all appear without distortion. The combination of all three should produce a central white section. If the picture has lines in it, or scrolls horizontally or vertically, and any of the colors are missing, troubleshoot for a Composite sync and color signal problem (see page 23-108).

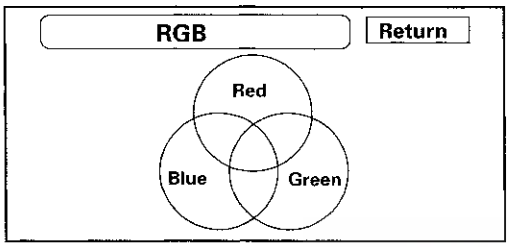

Gray Tone
This screen helps diagnoses problems with contrast. You should be able to see the changes from bar to bar across the scale. If you can't see changes from bar to bar, substitute a known-good navigation unit, and retest.

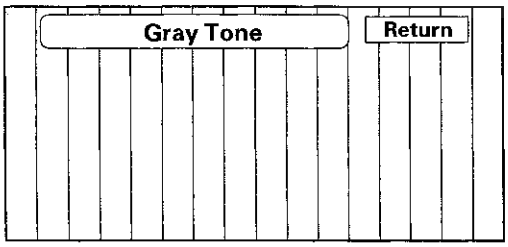

White Raster
This diagnostic screen checks for pixels that may be dead (off). The entire display must be white. If pixels are dead, replace the navigation unit.

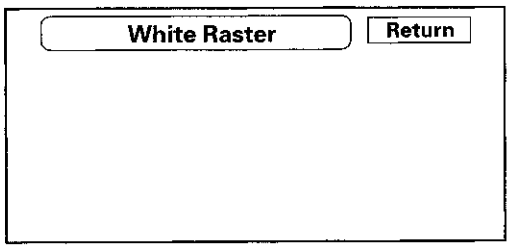

(cont'd)

System Diagnostic Mode (cont'd)

Black Raster
The entire display must be black. This diagnostic screen checks for pixels that may be stuck (on). If pixels are stuck on, replace the navigation unit.

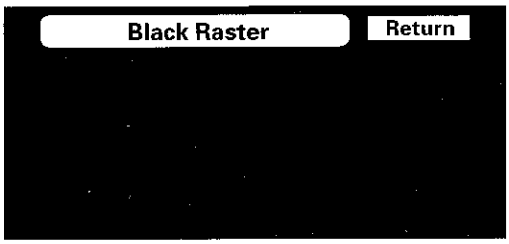

Color Pattern
The chart below shows the colors being used for the various screens. This is for factory use only. To check the color signal use the RGB test.

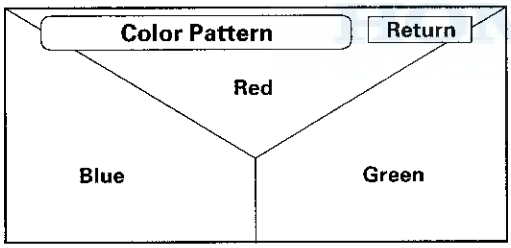

Monitor Adjustment
It is unlikely that you will ever need to adjust the monitor position. This is for factory use only. The Default button will reset the display position to factory specifications. The factory default is (0, 0). The H-POS button is for factory use only.

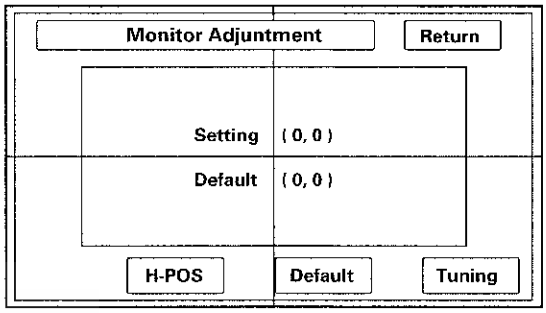

Touch Panel Check
The panel touch sensing system consists of a touch sensitive resistive membrane covering the display. Contrary to other systems using infrared beams, the screen has to be physically touched to make it work. The display has the capability of 479 touch locations (left to right), and 233 touch locations (top to bottom). The upper left hand corner is position (0, 0) and the lower right hand corner is (479, 233) as displayed. Touching anywhere on the screen displays the coordinate of the location, and a + icon appears where you touched the screen. If any area of the screen either doesn't respond, or responds at some other location when touched, then replace the navigation unit.

NOTE: Unlike earlier screens that used infrared sensors, direct sunlight does not affect this test.

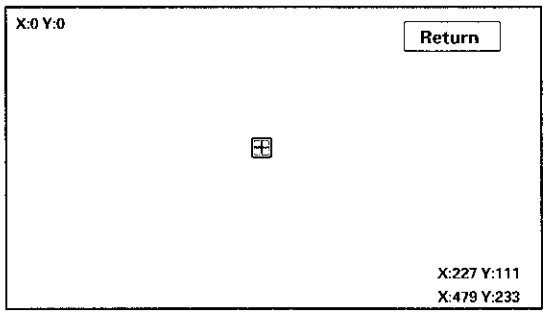

Touch Panel Calibration
The display screen uses a touch sensitive membrane. This means that every location of the entire surface of the display is touch sensitive. This diagnostic allows alignment of these touch locations with the location of the buttons images on the screen.

Normally this should never need adjustment, and is used only to adjust the touch locations for parallax (the touch locations appear different when viewed at an angle). However, if an adjustment is necessary, follow this procedure:

- The screen consists of the + button icons. Touch the center of the five + buttons on order 1—5.
- To store any change you make, touch the Set button.
- Use the Return key to exit the diagnostic.

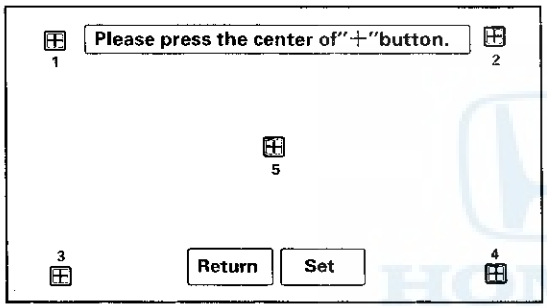

Unit Check

Select the item you want to check, and the test starts.

- Display
- Radio
- Navi ECU
- PC Card Info.
- Hard Key

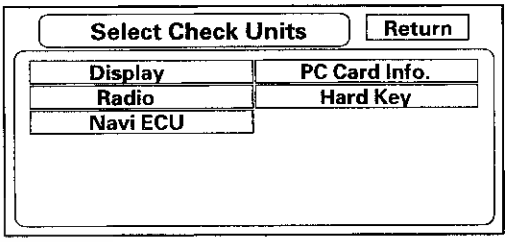

(cont'd)

System Diagnostic Mode (cont'd)

Display
This performs additional checks on the communication bus between the navi CPU and the display. In addition, this test checks the internal electronic functions.

If the connection is NG, replace the navigation unit.
- Connection verifies internal communications.
- Version represents the software version for the display.

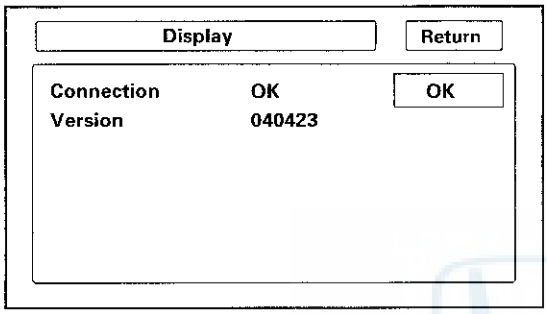

Radio
This diagnostic screen checks the internals of the radio (AM and FM) and CD player. If NG, replace the navigation unit.

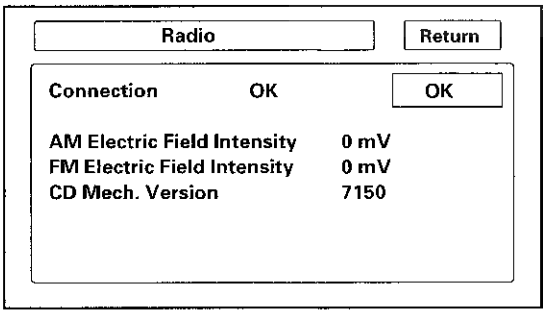

Navi ECU
This screen looks for problems with the navigation unit. When you initiate this diagnostic, the navigation unit may freeze or delay up to a minute while the diagnostic runs.

- If V-RAM or D-RAM is NG, then replace the navigation unit.
- If GPS indicates NG (ANT), check the entire GPS antenna wire from the navigation unit to the antenna. If the wire is crushed or damaged, try a known-good antenna. If this diagnostic reads OK, then order a new GPS antenna. If the diagnostic still reads NG (ANT), replace the navigation unit.
- DVD ROM represents the database version on the DVD. You can also find this information in setup by selecting System Information.
- Serial No. should be the same as the serial number found on the underside of the navigation unit. You need this number to obtain the security code from the Interactive Network system.
- Mem Clear is for factory use, and should never be used unless instructed by the factory. Accidental selection will erase the customer's personal data, PINS, and settings. If selected, a popup box appears asking if you want to clear the memory. If so, select Yes.

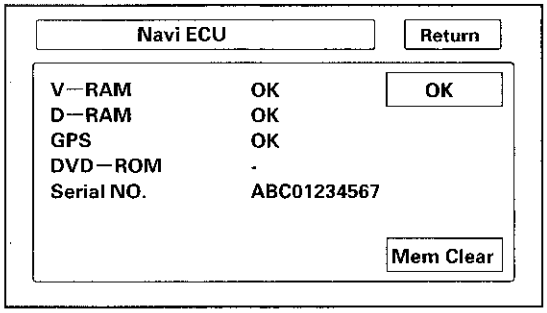

PC Card info
There is no PC card in the PC slot, and the screen should display, PC card is not inserted.

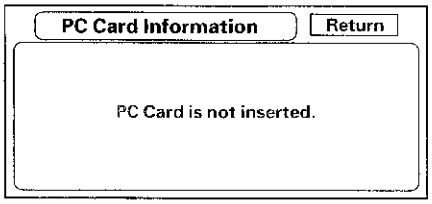

If the factory provides a PC card and instructs you to insert it, the screen displays the Manufacturer, and Product Name as shown in the following screen. Touch the FILES button to see the contents of the card.

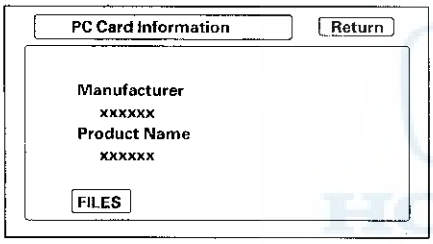

Hard Key
This diagnostic screen checks the status of each of the hard buttons surrounding the navigation display. When you press each hard button, the corresponding item on the screen should flash blue. Touch the return key, or press and hold the joystick to exit.

NOTE: It is normal for the VOL (+, −) CH (+, −) and MODE button to be inactive.

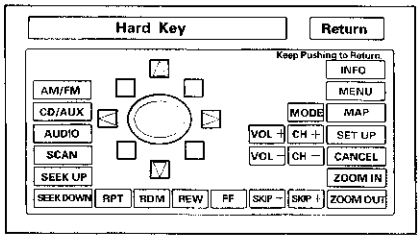

Car Status

Use this screen to confirm that navigation unit is properly receiving input signals. Signals equal to (0) are OFF, and signals equal to (1) are ON. If the value on the display does not match the actual vehicle status, then check the wire carrying the signal.

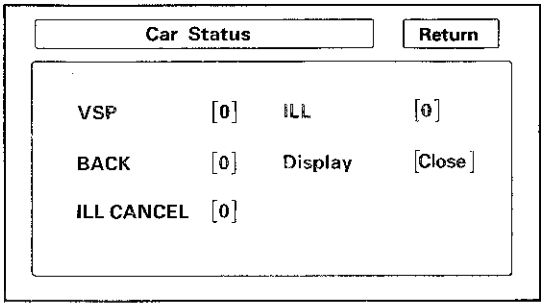

- VSP-Vehicle Speed Pulse from PCM connector A (Navigation unit connector A (17P) terminal No. 13)
  - OFF (0) when vehicle is not moving
  - ON (1) when vehicle is moving

The VSP comes from the PCM as a dedicated signal. Internally, the navigation unit compares the actual VP on the map against street data to adjust the pulse to speed scaling factor.

- BACK-Reverse indication from taillight relay (Navigation unit connector C (12P) terminal No. 7)
  - OFF (0) when shift lever is in any position other than reverse
  - ON (1) when shift lever is in reverse

The Back signal is used by the navigation unit to allow the map screen to show the VP moving backwards when in reverse and to trigger the optional rear view camera. This signal is needed because the Speed Pulse does not provide any directional information to the system.

- ILL CANCEL
  - OFF (0) when the dash lights brightness control button is less than 90 % brightness with the headlights turned on.
  - ON (1) when the dash lights brightness control button is more than 90 % brightness with the headlights turned on.

(cont'd)

System Diagnostic Mode (cont'd)

- ILL-Illumination Indication
  (Navigation unit connector A (17P) terminal No. 10)
  – OFF (0) when parking lights, or headlights are off
  – ON (1) when parking lights, or headlights are on

The navigation unit uses the signal to determine whether to put the navigation screen into the Day or Night brightness mode (Setup screen 1).

- Display-this displays the current position of the display
  – (Close) when the display is closed
  – (Open) when the display is open

The navigation unit has a microswitch to detect this. If open is indicated when the display is closed, replace the navigation unit.

GPS Information

This screen shows the current status of GPS reception. The circular diagram shows the current location of the GPS satellites (yellow balls) as they would appear in the sky. The outer circle represents the horizon (0 degrees elevation). The middle and inner circles represents 30 and 60 degrees respectively. The very center of the diagram (90 degrees elevation) is directly overhead. Nearby obstructions, like tall buildings, will block satellites in that direction. That is why it is necessary to be in an open area to effectively troubleshoot GPS reception issues. The satellites shown on the diagram correspond to the PRN number in the GPS Details screen. There are always 24 active GPS satellites in orbit. Because satellites fail, and have to be removed from service, spares are always parked in orbit, ready to be activated. This is why the PRN (satellite ID number) can be greater than 24.

NOTE:
- When you use this screen for troubleshooting, park the vehicle outside, away from buildings, tall trees, and high-tension wires for at least 10 minutes with the engine running.
- Metallic window tinting on the front or side window or after-market electronic accessories mounted near the navigation unit, GPS antenna, or navigation display can interfere with GPS acquisition.
- The Number of Satellites box shows the number of acquired satellites (maximum of 12). It should contain 4 or more icons. If not, troubleshoot for GPS icon is white or not shown (see page 23-110).
- The Current Position shows latitude, longitude, and elevation (in meters). If there are less than 4 satellites, the elevation can be grossly inaccurate.
- The Date/Time field shows the current date, and also a time that includes daylight savings and other offsets entered by the customer in Setup function Adjust Time Zone/Clock.

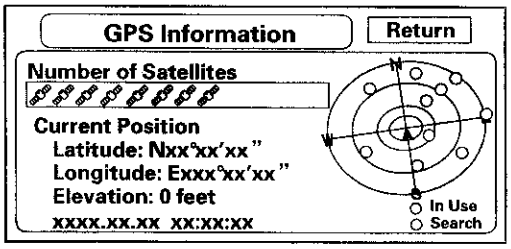

NOTE:
Push and hold the Map/Guide button, and the dots on the diagram are replaced with the PRN # (satellite numbers). These numbers correspond to the numbers in the PRN column on the GPS details screen.

GPS Detail

By pressing and holding the MENU button for 10 seconds, a GPS Detail screen appears. This screen displays real time incoming satellite positional data. Most of the information shown on this screen is for factory use, however some of the data can indicate partial GPS signal interference.

NOTE: The data shown is an example only.

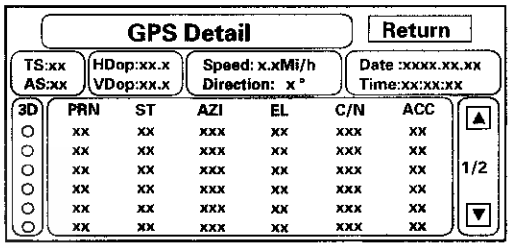

- The box TS/AS and HDop/VDop is for factory use.
- The Speed and Direction information is updated in real time when driving, and can be used to detect intermittent speed sensor problems.
- The Date/Time Information is the same as in Setup screen 2 Adjust Time Zone/Clock.
- If the 3D icon is shown above the yellow dots, this implies that at least 4 satellites are available for map positioning, and the GPS indicator on the map screen will be green. See the Global Positioning System detailed explanation in the System Description (see page 23-94).
- If the row of data in the table below begins with a yellow dot, the AZI and EL fields can be used to locate each satellite PRN # on the circular GPS diagram (see prior screen).

(cont'd)

System Diagnostic Mode (cont'd)

The table of values shown define the terms at the top of the columns in the GPS detail screen.

Column	Description	Problem indication
3D	Active satellites (Yellow Dot)	If 3D is missing follow GPS icon is white or not shown (see page 23-110).
PRN	The satellite ID number	
ST	The status: 0 = cannot view or searching, 2 = acquiring	If all 0, then, follow GPS icon is white or not shown troubleshooting (see page 23-110).
AZI	Azimuth, the angle (0—360) clockwise from north	
EL	Elevation from the horizon (90 deg is overhead)	
C/N	N/A	Healthy signal is 49—52, no signal: 27—33
ACC	N/A	

Yaw Rate

This diagnostic checks the yaw rate sensor in the control unit. This device detects when the vehicle turns, and repositions the vehicle position icon on the map screen. For more detailed information, see the yaw rate sensor theory of operation under System Description (see page 23-93).

- Sensor indicates the voltage output from the yaw rate sensor. It should indicate about 2.500 V when the vehicle is stopped.
- Offset is the reference voltage or standard within the yaw rate sensor. It also should indicate about 2.500 V when the vehicle is stopped.
- A sensor output voltage LOWER than the Offset voltage indicates that the vehicle is turning to the right.
  A sensor output voltage HIGHER than the Offset voltage indicates that the vehicle is turning to the left.
- The yaw rate offset and sensor should both indicate about 2.500 V when the vehicle is stopped. If either reads zero or 5.000 V, replace the navigation unit.

- The yaw rate offset and sensor should be within +/− 0.01 V of each other when the vehicle is stopped. The sensor value should change relative to the offset as the vehicle turns while driving. If not, replace the navigation unit.

Example: Vehicle stopped

Normal		**Abnormal**	
Offset	2.526 V	Offset	2.526 V
Sensor	2.516—2.536 V	Sensor	2.623 V

Example: Vehicle turning

Normal		**Abnormal**	
Offset	2.526 V	Offset	2.526 V
Sensor	2.678 V (right turn) 2.478 V (left turn)	Sensor	2.623 V (no change on turns)

The settings CCW Cal Factor, CW Cal Factor, and Set are for factory use only. THIS SHOULD NEVER BE USED.

NOTE: Do not try to adjust the yaw rate sensor without instructions from the factory. See next paragraph for tuning.

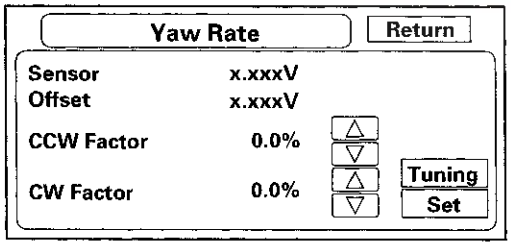

Yaw Rate Tuning

This diagnostic allows you to graphically display problems with the yaw rate sensor.

- The ANG-Disp value accumulates any differences between the offset and sensor voltages (see Yaw Rate diagnostic). When the sensor functions properly, the random changes in these two voltages generally cancels out, so the value is 0. However if one voltage is consistently higher than the other, then the ANG-Disp value accumulates the constant change.
- The Reset button temporarily clears the angular accumulation (ANG-Disp), and clears the display dots.
- Do not touch the CCW or CW, or Set buttons. These are used for factory setup only.

For serious problems with the sensor, the stationary test usually confirms whether the sensor is defective. For yaw rate issues related to driving, perform the road test described below.

(cont'd)

System Diagnostic Mode (cont'd)

1. Stationary test: If the VP icon spins in place and the ANG-Disp value slowly increases or decreases in value, the yaw rate sensor is defective. Replace the Navigation unit.

2. Road test: Drive the vehicle on a very straight road. Enter the diagnostic mode, select Yaw rate, and touch the Tuning button. While driving down a straight road, the white dots should trace a straight line across the screen. However, if you are driving on a straight road, and you notice the dots constantly dropping down or heading up as you drive, the navigation unit's yaw sensor is defective. You can touch Reset to clear ANG-Disp, and dotted line.

3. If either test fails, please enter "Yaw rate sensor defective" for the problem description on the Navigation core return form.

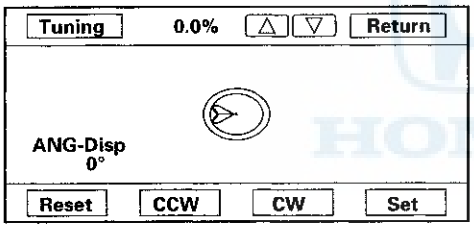

Tire Calibration

As the vehicle moves, the navigation system receives speed pulses from the PCM. These pulses are converted using a conversion factor to a mph speed that moves the vehicle position (VP) on the map. The navigation system has an internal tuning function that generates and refines this factor based on actual driving. The Level indicates the status of the tuning. At navigation initialization, it begins at 0, and increases to 10 as the navigation system is used.

- The Auto Tuning is factory set to ON, and should remain on.
- The Study indicates the tuning status. If it is less than 10, the unit is still calibrating.
- The Tire-Cal. Tuning and Set should not be used. It is for factory use only.

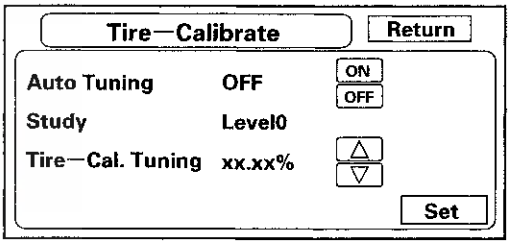

Functional Setup

Select the item you want to check.

- Log Data
- GPS Send Time
- Demo Mode
- Mic Level
- Solar Angle
- Save Users Memory ('07-08 models)

'06 model

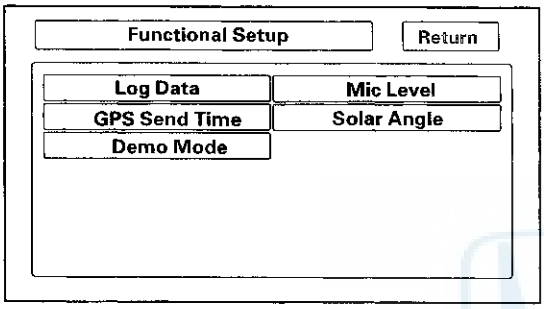

'07-08 models

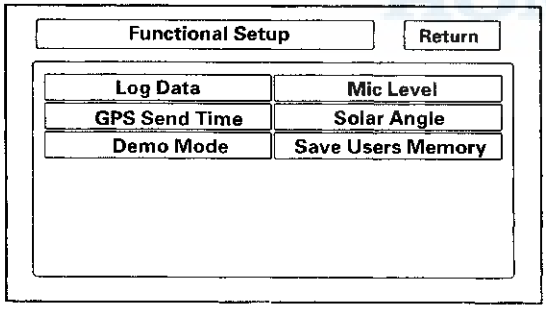

Log Data

This screen allows the factory to collect log data to troubleshoot navigation system issues.

- There is no card in the PC card Slot, the screen appears as:

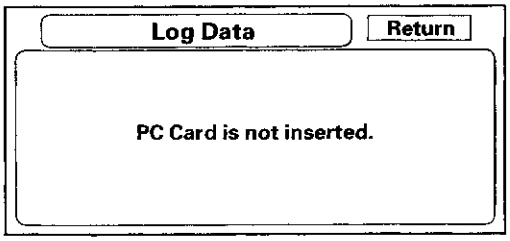

- However, if the factory provides a PC card, insert it into the card slot (label side up). Follow the factory logging VD data procedure for gathering test data, and properly ending the test.

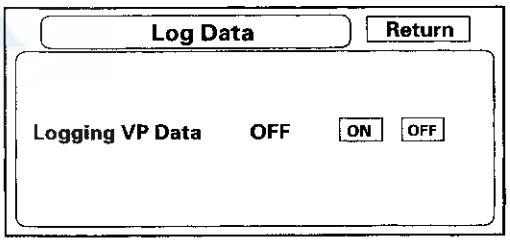

(cont'd)

System Diagnostic Mode (cont'd)

GPS Send Time
This screen is for factory use only. It allows adjustment of the GPS time. This display updates in real time.

- GPS Time is the time as received from the GPS satellites. It is in Greenwich Mean Time (GMT).
- Date, Hour, Minute, and Set should not be used.

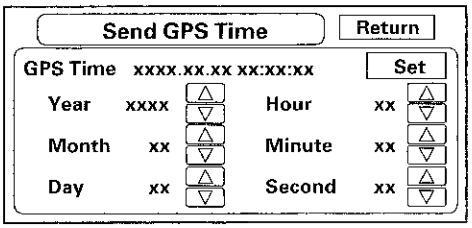

Demo Mode
This screen allows the navigation system to drive a route, when the vehicle is stationary. Typical applications include auto shows, and other events. This feature allows a visitor to enter a destination, and see the system drive to the destination. No speed signal is needed.

- To initiate the mode, select ON.
- Changing the speed rate in ms (milliseconds) is optional, and represents the time between updates of the VP (vehicle position) movement.
  - When you increase the rate, the VP slows down because it is updated (moved) at a slower rate.
  - When you decrease the rate, VP is faster because it is updated (moved) more frequently.
  - 1500 ms is VP at its slowest in demo mode.
  - 150 ms is VP at its fastest in demo mode (Default).
- At key off, the setting automatically returns to the default of Off.

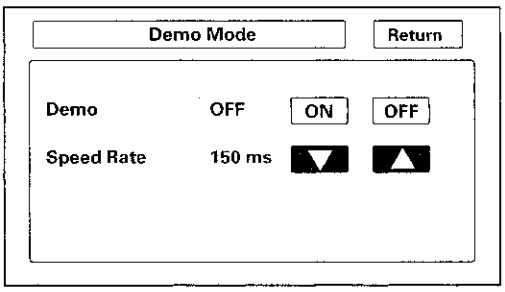

Mic Level
This diagnostic screen allows you to independently test the microphone and the navigation TALK and BACK buttons. They are used to activate the voice control system. The microphone is located near the map light in the ceiling. It is directional, and works best if the voice is coming from the drivers seat.

- Press the navigation TALK button on the steering wheel, wait unit you hear a beep, and in a normal voice say "testing". The TALK indicator on the screen should momentarily turn green, and the text "Now Recording..." should appear in yellow. If the TALK indicator on the screen does not briefly turn green, then check the wiring from the navigation TALK button to the navigation unit.
- If there is no Mic Level movement when you speak, then you should check the wire running from the microphone to the navigation unit.
- If the mic level bar is full or almost full without you speaking or other back ground noise, replace the microphone and recheck.
- Press the navigation BACK button on the steering wheel. The Cancel indicator on the screen should momentarily turn green. If it does not briefly turn green, then check the wiring from the steering wheel navigation BACK button to the navigation unit.

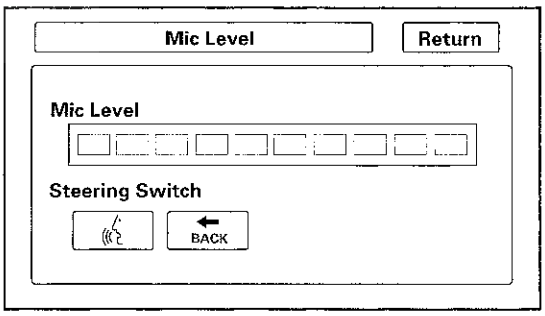

NOTE: The mic level should reach the 6th bar.

Solar angle

This screen graphically displays the sun's position as determined by GPS.

This screen is for factory use only, and allows simulation of this feature for development purposes.

- The manual tuning button should always be OFF
- The Angle is the angle that the sun (shown with the red dot) is above the horizon.
- The vehicle value represents the angle, clockwise from North, to the direction that the vehicle position (VP) icon is pointing (always points straight up).
- The direction value is the angle, measured clockwise from the VP (straight up) to the suns position.
- The reliability ranges from 1 to 3, and represents the accuracy of the Vehicle Position relative to the sun.

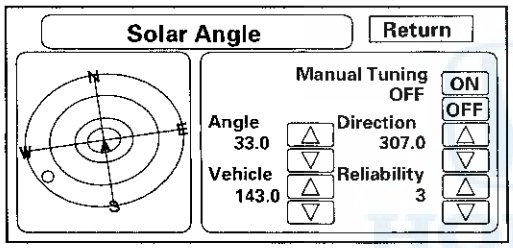

Version

This screen displays the current version of the program, and allows the loading of a new version of the program either from a CD/DVD or from a PC card.

The Program Flash version should always be greater than or equal to the Program Disc version. IPL, APL, DBOOT, and System uCom are for factory use only.

The Model code is SNC and is for factory use only. This code is stored on a chip in the navigation unit. Therefore, every model has a unique part number for the navigation unit.

NOTE: If any model number other than SNC is displayed, replace the navigation unit with the correct part. The model code tells the navigation unit what software to load off the DVD.

Do not use Download, unless instructed to do so by the factory.

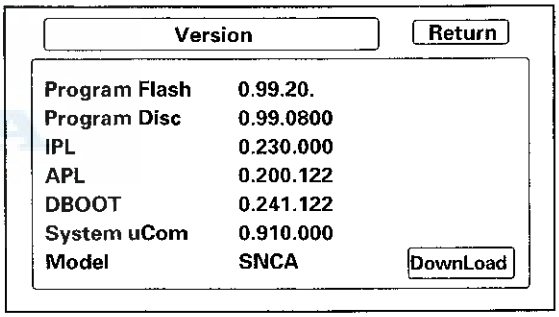

(cont'd)

System Diagnostic Mode (cont'd)

Save Users Memory

When replacing the navigation unit, this function allows the dealer to transfer the customer's personal data to the new navigation unit. The transferred information includes their Setup settings, and personal addresses. The dealer inserts a PC card to the navigation unit, and then selects the Save Users Memory function. The two functions in this diagnostic screen are EXPORT and IMPORT. EXPORT saves the customer's data to the PC card, and IMPORT moves the PC card files to the new navigation unit.

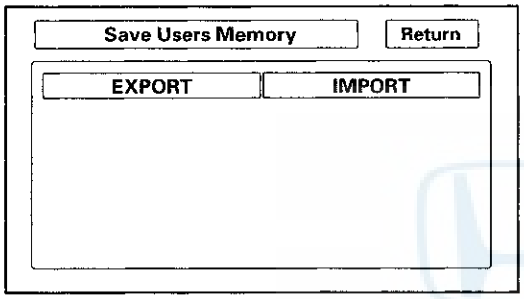

Before starting this function, see the PC Card FAQs for information regarding PC cards, how to use this function.

1. Select EXPORT button to move the customer's data from the original navigation unit to the PC card. Select YES on the Export User Data Confirmation screen. The process takes only a couple of seconds. The system stores two files on the card.

   NOTE: If the EXPORT button is grayed out, check the PC card's edge connector, and the pins inside the navigation unit (with a flashlight) for damage.

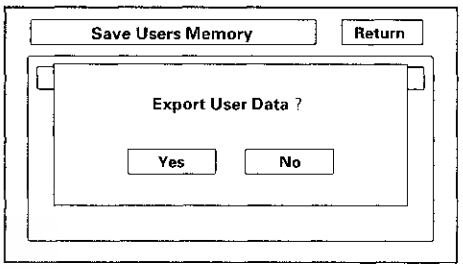

2. After installing the customer's original DVD in the new navigation unit, allow the system to boot up. Insert the PC card in the new navigation unit and enter the Save Users Memory in the navigation system diagnostic mode.

3. Select IMPORT button to move the two files stored by the Export process from the PC card to the new navigation unit. Select YES on the Import User Data Confirmation screen. When the transfer is finished (a few seconds) the system automatically reboots. After the system reboots, remove the PC card from the PC card slot.

   NOTE: If the IMPORT button is grayed out, check if the Model and the Program Flash shown on the Version screen are the same for the two navigation units.

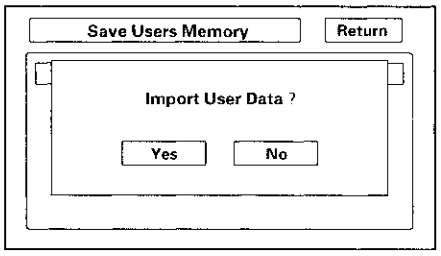

PC Card FAQs

Question	Answer
Where do we buy the flash memory or adaptors, and what do we ask for?	You need a PCMCIA type II adaptor and a flash memory chip. You can purchase them at a computer, or office supply store. The card is the same size and shape as the PC card in the HDS. Adaptors that accept multiple flash types are not recommended.
What memory flash chips will work with what adaptors?	The flash memory devices that have been tested include Compact Flash (CF), and ATA style (like the card in the HDS). Other card types and flash memory chips may work, but have not been tested.
What capacity card do I need for this function?	A memory chip with capacity of 64 MB to 2 GB will work. The two files moved to the PC card during export are less than a Megabyte in size.
Should the dealer have a dedicated PC card for the Export and Import navigation function?	Yes, treat the PC card as a dedicated special tool that you can use anytime you need to transfer the navigation personal files to a new navigation unit on '07 and later vehicles.
What device can I use to maintain the PC card, and delete files?	Any computer store sells USB style card readers that accept the PC card, and allow you to do file maintenance on your PC card. Most laptops also accept the PC card.
Can we move the customer's data to different models?	No, the files are model specific and will only load into a navigation unit with the same part number.
Can we move the customer's data to the same vehicle with a different software version (like moving from version 4.41 to version 4.51)?	The customer's files can only be transferred to a new navigation unit if the Model and the Program Flash shown on the Version screen are the same. Files cannot be transferred to the different model and different versions.
Will other files on the PC card like images or music files prevent the Export/Import function from working?	No, the system simply adds two small files that are recognized by the new navigation unit when performing the import function. However, it the PC card is full, the Export function won't work correctly.
Do I have to delete the files on the PC card after each transfer of the personal data?	After the transfer of personal data to the new navigation unit, the files remain on the PC card. Since this is confidential information, Honda recommends deleting these files after the transfer. Please note that each time you export navigation files of the same model and version, the files are overwritten. Over time the PC card accumulates two files for each version of the 8 or so Honda navigation models.
If the memory card needs formatting, what format should I use?	It is unlikely that the PC card will ever need formatting, however, if it does, use the FAT (file allocation table) file system.
I can't enter the navigation diagnostic mode to do the Export/Import function. How can I transfer the personal data?	Some internal navigation unit ECU failures may make it impossible to use the Export/Import function.

(cont'd)

System Diagnostic Mode (cont'd)

Question	Answer
Why wont the Export or Import functions work or are grayed out? What do I check as part of troubleshooting?	• The card may not be fully inserted into the slot. Eject the PC card, and inspect for warping or damage to the edge connector. Never use excessive force to insert a PC card. This can result in damage to the pins in the rear of the slot. • The PC card may not contain files that are recognized by the new navigation unit. Navigation data can only be transferred between navigation units with the same Model code, and with the same navi Program flash version. • The flash memory chip type may not be accepted by the system. Only Compact Flash and ATA cards have been tested. • The card's PCMCIA adaptor may prevent a known-good card from being recognized. Avoid multi-slot type PCMCIA adaptors that accept several different flash memory types. • The card may be full and as a result the files are stored, but without any data. Export and import appear to function, but move nothing. Delete unused files from the PC card. • There may not be any files on the PC card. If the PC card has a write protection switch, make sure it is turned off before using the Export function. • Although flash memory chips are reliable, occasionally they develop bad sectors or other formatting errors that prevents them from accepting files. The PC card should be reformatted using the FAT format. • The PC card may have been formatted using the format NTFS. Only the FAT format is accepted by the system. • Hard Disc Drive (HDD) cards may not work properly in the system and can overheat or quit functioning, particularly in a hot vehicle. They are not recommended. • Before performing the Import function, ensure that the original navigation DVD is loaded into the new navigation unit and working properly.

Error Message Table

Screen Error Message	Solution
Navigation system is unable to acquire a proper GPS signal.	Make sure there is nothing on the dashboard blocking the GPS antenna. If not, move the vehicle to an open space away from tall buildings, trees, etc. Aftermarket metallic window tinting and other aftermarket devices can affect the GPS reception.
Navigation is open or No DVD disc installed. Please check system.	Make sure the correct white-labeled navigation DVD is installed with the label side up and the navigation display is closed.
DVD reading error (incorrect DVD disc) place consult your dealer.	Verify correct color (white) DVD installed.
Display temp is too high. System will shut down until display cools down.	This message appears briefly when the display temperature is too high, and the display turns off until the temperature cools down. The system turns back on when the display cools down.
Outside temperature is low, system will take a while to start up.	The temperature is below −22 ℉ (−30 ℃) and the navigation ECU has difficulties reading the navigation DVD. The system will start up when the temperature warms up.
DVD disc reading error (unformatted), please consult your dealer.	Check the navigation DVD source for deep scratches or other damage. Make sure you are using an official Honda navigation DVD (white in color). The system cannot read other mapping databases or video DVDs. Check online for any service publications to update the navigation system.
Route has not been completed. Please try again from a different location.	Routing to or from a place (new area) that is not in the database. Try planning a different route to or from a different location.
No alternate route found. Original route will be guided.	No alternate route method was found. The original route will be used.
This destination cannot be found in database.	The destination was not found in the database. Try another destination nearby, or select the destination with the joystick.

CD, DVD, and PC Card Removal/Installation

If the displays Open and Close buttons do not work, you must manually open the display to remove the customer's Navigation DVD, CD, and possibly their PC card. Follow to the steps.

1. Remove the navigation unit from the vehicle (see page 23-143).

2. On the bench, carefully pull the display (A) straight out (about 1/2 inch).

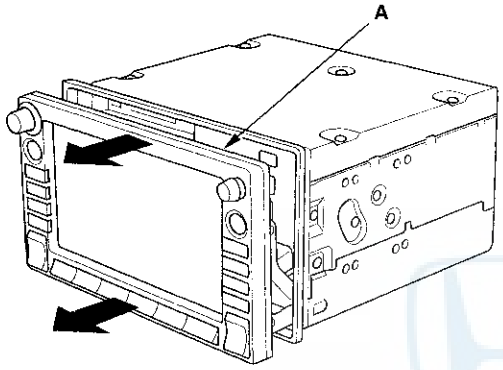

3. Fold down the display as shown in the diagram below.

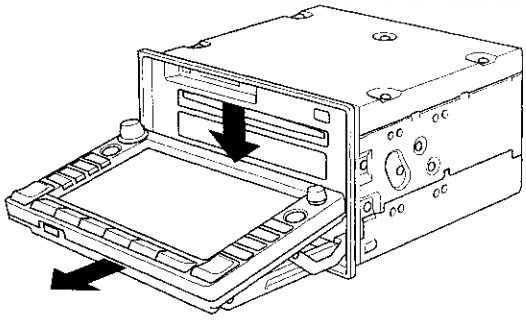

4. Push the PC card eject button (A) to eject the customer's PC card (if installed). Power is not required for this function.

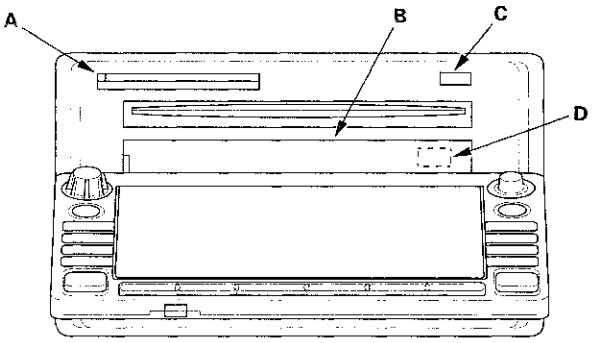

5. Remove the plastic lid (B) over the navigation DVD slot.

6. With the display open, temporarily reconnect the unit in the dash (to power it up).

7. Push the CD eject button (C), and navigation DVD eject button (D) (the button is behind the plastic cover and works only when the unit is powered) and remove the discs (hold the discs by their edges to avoid fingerprints). To avoid scratches, place the navigation DVD and the customer's CD in a jewel case if available.

8. Re-attach the plastic lid that hides the navigation DVD slot.

9. Close the display by first returning the display to the upward position, and then pushing the entire display straight back into the unit.

10. After installing the new navigation unit, re-insert the navigation DVD, the customer's CD, and the PC card.

Navigation Unit Removal/Installation

SRS components are located in this area. Review the SRS component location (see page 24-11).
Also review the precautions and procedures (see page 24-13) in the SRS section before doing repairs or service.

NOTE:
- Put on gloves to protect your hands.
- Take care not to scratch the dashboard and related parts.
- Lay a workshop towel under the parts when working on them to protect the face panel from scratches or other damage.
- Do not work in a dusty or dirty place.
- Discharge static electricity from your body before and during the work.
- Do not touch the circuit board(s) with your bare hands.
- Do not work with dirty hands.
- Be careful not to fold the flat plate cable.
- Do not touch the terminal connector of the flat plate cable with your bare hands. (If you have touched it, wipe it off thoroughly.)
- Before replacing the navigation unit, make sure to remove the customer's navigation DVD, and their audio CD, or PC card. Remanufactured navigation units do not come with a navigation DVD. Re-install the customer's navigation DVD, audio CD, and audio PC card into the new remanufactured unit. If the navigation display won't open, manually remove the navigation DVD, audio CD, and PC card (see page 23-142).
- If you are replacing the navigation unit, write down the audio presets (if possible), then enter them into the new navigation unit.

1. Make sure you have the 4-digit anti-theft code for the navigation system.

2. Eject the DVD from the original navigation unit. To avoid scratching or damaging the DVD, temporarily place the DVD in jewel case.

3. Remove the subdisplay visor (see page 20-87).

4. Remove the center pocket hole lid and bolts, then pull out the center panel (A).

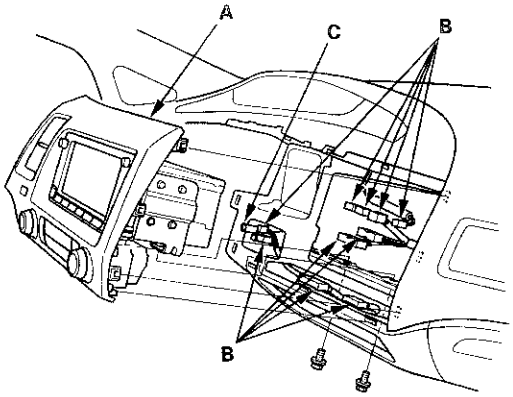

5. Disconnect the connectors (B) and air hose (C), then remove the center panel.

(cont'd)

Navigation Unit Removal/ Installation (cont'd)

6. Remove the screws, brackets (A), and the navigation unit (B) from the center panel (C).

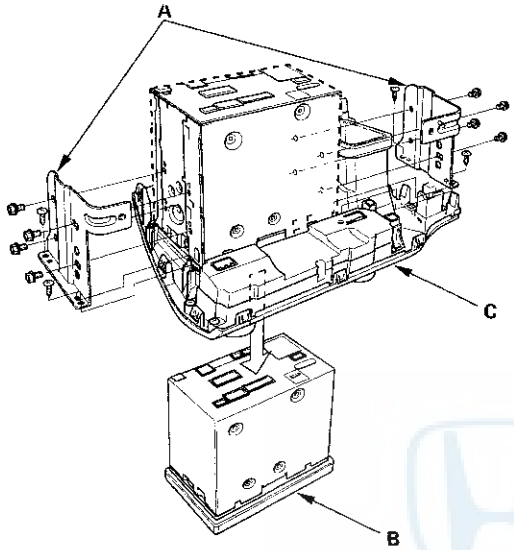

7. Install the navigation unit in the reverse order of removal and make sure all connectors are secure.

8. Turn the ignition switch to ON (II), then reinstall the customer's original DVD, verifying that the DVD is free of scratches or smudges.

9. Check any official Honda service website for more service information about the navigation system.

   NOTE: Simply transferring the DVD from the original navigation unit to the new navigation unit does not assure the correct software for the vehicle will be loaded into the new navigation unit. Doing the DVD transfer without doing software patches may cause the new navigation unit to appear to be malfunctioning.

10. Enter the new navigation anti-theft code.

11. Park the vehicle outside, and do the GPS initialization (see page 23-81).

12. Give the new navigation anti-theft code to the customer.

Voice Control Switch Test

SRS components are located in this area. Review the SRS component location (see page 24-11).
Also review the precautions and procedures (see page 24-13) in the SRS section before doing repairs or service.

1. Remove the driver's airbag assembly (see page 24-184).

2. Remove the 20P connector (A) from the cable reel (B).

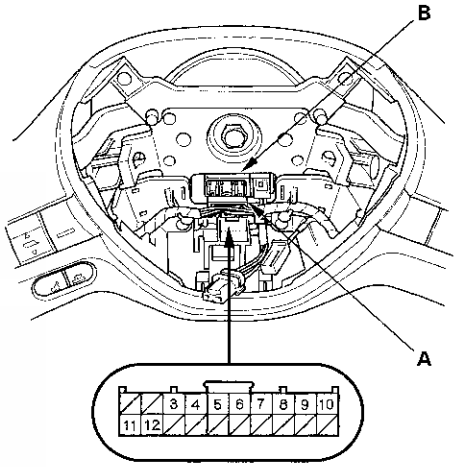

3. Measure the resistance between terminals No. 8 and No. 10 in each switch position according to the table.

Position	Resistance
No button pressed	About 10 kΩ
TALK	About 2.2 kΩ
BACK	About 680 Ω

4. If the resistance is not as specified, replace the voice control switch (see page 23-145).

Voice Control Switch Replacement

SRS components are located in this area. Review the SRS component location (see page 24-11).
Also review the precautions and procedures (see page 24-13) in the SRS section before doing repairs or service.

1. Remove the steering wheel (see page 17-6).
2. Remove the audio remote switch (see page 17-7).
3. Install the voice control switch in the reverse order of removal.

Microphone Replacement

1. Remove the front individual map light lens (A) and bolts.

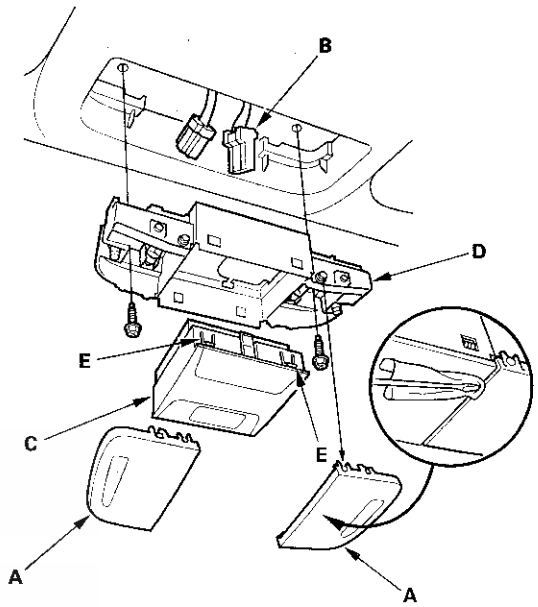

2. Disconnect the 10P connector (B) from the microphone.
3. Carefully pry off the microphone (C) from the map light housing (D) while pressing in on the retaining tabs (E).
4. Install the microphone in the reverse order removal.

GPS Antenna Removal/Installation

1. Remove the navigation unit (see page 23-143).
2. Remove the subdisplay visor (see page 20-87).
3. Remove the wire harness clip (A), screws, and GPS antenna (B).

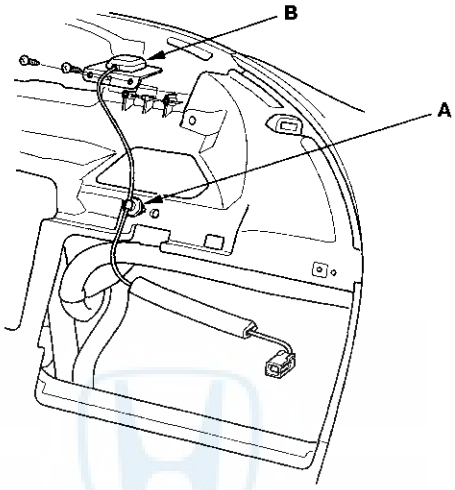

4. Install the antenna in the reverse order of removal.

Audio, Navigation, and Telematics ('09 model)

Special Tools 23-148

Audio System
Component Location Index 23-149
Symptom Troubleshooting Index 23-150
System Description 23-152
Circuit Diagram 23-166
Self-diagnostic Function 23-172
Error Codes 23-176
Symptom Troubleshooting 23-178
Sound Quality Diagnosis 23-227
* Audio Unit Removal/ Installation 23-232
XM Receiver Removal/ Installation 23-234
USB Adapter Unit Replacement 23-234
Speaker Replacement 23-235
Auxiliary Jack Assembly Replacement 23-236
USB Adapter Replacement 23-237
* Audio Remote Switch Test 23-237
Audio Remote Switch Replacement 23-238
AM/FM Antenna Replacement 23-238
AM/FM/XM Antenna Replacement 23-239

Navigation System
Component Location Index 23-240
General Troubleshooting Information 23-241
DTC Troubleshooting Index 23-250
Symptom Troubleshooting Index 23-251
System Description 23-254
Circuit Diagram 23-271
System Diagnostic Mode 23-272
DTC Troubleshooting 23-295
Symptom Troubleshooting 23-313
CD, DVD, and PC Card Removal/Installation 23-329
* Navigation Unit Removal/ Installation 23-330
* Voice Control Switch Test 23-332
HFL-Voice Control Switch Replacement 23-332
HFL-Navigation Microphone Removal/Installation 23-333
GPS Antenna Removal/ Installation 23-333

HandsFreeLink System
Component Location Index 23-334
General Troubleshooting Information 23-335
DTC Troubleshooting Index 23-344
Symptom Troubleshooting Index 23-345
System Description 23-346
HFL System Troubleshooting 23-347
Circuit Diagram 23-348
DTC Troubleshooting 23-350
Symptom Troubleshooting 23-356
HFL Switch Test 23-361
Control Unit Input Test/ Replacement 23-362

Special Tools

Ref. No.	Tool Number	Description	Qty
①	07AAZ-SDBA100	Diagnostics CD	1
②	07AAZ-SDBA200 (ABEX-TCD-725B)	Skip Test CD	1
③	07AAZ-SDBA300 (ABEX-TCD-721)	Skip Test CD	1

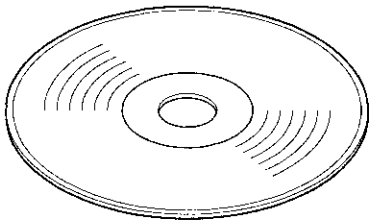

①, ②, ③

Component Location Index

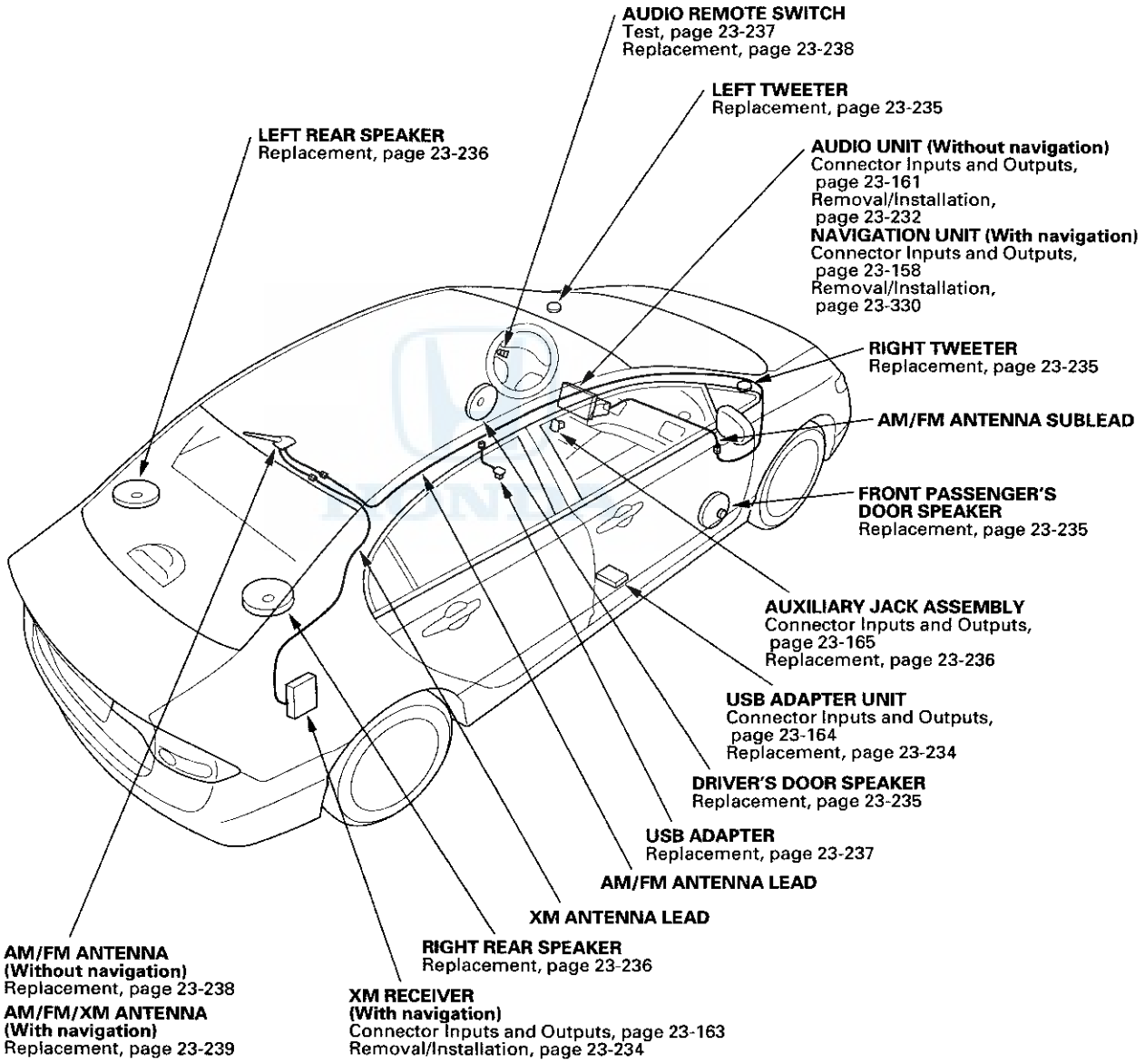

Symptom Troubleshooting Index

Symptom	Diagnostic procedure	Also check for
Poor AM or FM radio reception or interference (with navigation)	Symptom Troubleshooting (see page 23-178)	AM/FM antenna lead and/or sublead short or open in the wire
Poor AM or FM radio reception or interference (without navigation)	Symptom Troubleshooting (see page 23-182)	AM/FM antenna lead and/or sublead short or open in the wire
Audio unit power switch will not turn on (No information display and no sound) (with navigation)	Symptom Troubleshooting (see page 23-185)	
Audio unit power switch will not turn on (No information display and no sound) (without navigation)	Symptom Troubleshooting (see page 23-186)	
Audio unit power switch will not turn off (with navigation)	Symptom Troubleshooting (see page 23-187)	
Audio unit power switch will not turn off (without navigation)	Symptom Troubleshooting (see page 23-188)	
No sound is heard from the speaker(s) (display is normal) (with navigation)	Symptom Troubleshooting (see page 23-188)	
No sound is heard from the speaker(s) (display is normal) (without navigation)	Symptom Troubleshooting (see page 23-190)	
Auxiliary input sound is low or cannot be heard	Symptom Troubleshooting (see page 23-193)	
Audio system sound is weak or distorted (display is normal)	Symptom Troubleshooting (see page 23-196)	
Radio preset memory is lost	Symptom Troubleshooting (see page 23-197)	Internal error
Volume does not change	Symptom Troubleshooting (see page 23-197)	
Volume does not increase with speed (with navigation)	Symptom Troubleshooting (see page 23-198)	
Volume does not increase with speed (without navigation)	Symptom Troubleshooting (see page 23-199)	
Volume is too high or too low when driving at freeway speeds	Symptom Troubleshooting (see page 23-200)	
Radio tuner does not change stations	Symptom Troubleshooting (see page 23-200)	

Symptom	Diagnostic procedure	Also check for
Navigation unit button illumination does not work (with navigation)	Symptom Troubleshooting (see page 23-201)	
Audio unit button illumination does not work (without navigation)	Symptom Troubleshooting (see page 23-202)	
Display does not dim or brighten with dimmer (without navigation)	Symptom Troubleshooting (see page 23-203)	
Audio disc does not load	Symptom Troubleshooting (see page 23-204)	
Audio disc does not eject	Symptom Troubleshooting (see page 23-204)	
Audio disc does not play	Symptom Troubleshooting (see page 23-205)	
Audio disc skips	Symptom Troubleshooting (see page 23-205)	
Audio remote switch does not work properly (with navigation)	Symptom Troubleshooting (see page 23-206)	
Audio remote switch does not work properly (without navigation)	Symptom Troubleshooting (see page 23-208)	
Audio disc cannot be inserted and/or ejected (with navigation)	Symptom Troubleshooting (see page 23-209)	
Display can be opened and/or closed even when an audio disc is being inserted or ejected	Replace the navigation unit (see page 23-330)	
PC card will not play/card icon on audio screen cannot be selected (with navigation)	Symptom Troubleshooting (see page 23-210)	
USB input sound is low or cannot be heard (with navigation)	Symptom Troubleshooting (see page 23-211)	Requirement of the USB devices (see Owner's Manual)
USB input sound is low or cannot be heard (without navigation)	Symptom Troubleshooting (see page 23-212)	Requirement of the USB devices (see Owner's Manual)
USB device does not function (with navigation)	Symptom Troubleshooting (see page 23-214)	Requirement of the USB devices (see Owner's Manual)
USB device does not function (without navigation)	Symptom Troubleshooting (see page 23-217)	Requirement of the USB devices (see Owner's Manual)
Error code: XM NO SIGNAL or XM ANTENNA is displayed (with navigation)	Symptom Troubleshooting (see page 23-221)	
XM radio display is blank and no station information is displayed (with navigation)	Symptom Troubleshooting (see page 23-221)	
XM radio preset memory is lost (with navigation)	Symptom Troubleshooting (see page 23-224)	
Poor or no sound with XM radio (Navigation unit does display XM channels) (with navigation)	Symptom Troubleshooting (see page 23-225)	

Audio System ('09 models)

System Description

Overview

The audio unit acts as the processor for all audio functions. Select audio functions from the audio unit, the audio remote (on the steering wheel), or by using the navigation voice control system. The audio display provides the current audio status. For vehicles with navigation, additional audio information is available by touching the audio button on the navigation audio screen (See the owner's manual and the navigation system manual for more details.).

The XM receiver passes its signal to the audio unit. In addition, it communicates with the audio unit via the GA-Net bus. Any open connections in the GA-Net bus circuit causes audio and navigation functions to appear inoperative.

For vehicles with navigation, pressing the open/close switch on the navigation display panel allows access to the CD slot and PC card.

A security signal is daisy-chained between the audio and vehicle components for integration into the vehicle's security system.

Speed-sensitive volume compensation (SVC)
Some audio systems are equipped with speed-sensitive volume compensation (SVC). The navigation or audio unit receives the vehicle speed pulse (VSP) from the PCM. The system processes the speed input and increases the navigation or audio system volume level as the vehicle speed increases to compensate for the various interior noises that occur at higher speeds. When the vehicle slows down, the volume returns to its normal level. The SVC has four settings: SVC OFF, LOW, MID and HIGH that can be adjusted using the navigation or audio unit. The SVC comes from the factory with the MID setting as the default.

To change the audio unit SVC setting, press the tune folder sound knob repeatedly until the SVC is displayed, rotate the knob to adjust the SVC to the desired setting (SVC OFF, LOW, MID, or HIGH).

To change the navigation unit SVC setting, press the AUDIO button, and then select the SOUND icon on the navigation display. Press the navigation display to select the desired setting (OFF, LOW, MID, HI).

The navigation system allows voice control of the audio, XM, PC card, and CD player. Voice control commands are communicated on the GA-Net (audio unit). When using the navigation TALK/BACK button, the audio is muted on all speakers and you get navigation sound on the front channels. When using the navigation or route guidance (RG), the front speakers give the navigation sound and the rear speakers continue to play. For more information, see the navigation section. The outline of the interruption function is shown in this table.

Contents	Audio output				
	Left front CH	Right front CH	Right rear CH	Left rear CH	Subwoofer CH
Navigation TALK/BACK Buttons	Navigation voice output	Navigation voice output	Muted	Muted	Muted
Route Guidance	Navigation voice output	Navigation voice output	Audio	Audio	Audio

USB Adapter

The audio unit can play digital music from portable audio players, USB drive, etc. When the device is plugged into the USB adapter. The audio unit uses the GA-NET to allow you to control the device from the audio unit when searching and playing the files. Not all players and player functions work with the USB adapter. Please see the owner's manual for more information.

GA-Net Bus Configuration

The GA-Net bus passes audio and navigation commands throughout the navigation and audio components. These commands include navigation touch screen and hard button signals, audio/XM selections by voice, and XM station and music title names. Because the entire bus is daisy chained between components (see diagram), any open or short in the GA-Net bus harness will cause any or all of these functions to become inoperative. Naturally the addition of any audio accessory must maintain the continuity of the GA-Net bus by installing the Y cable included with the accessory kit.

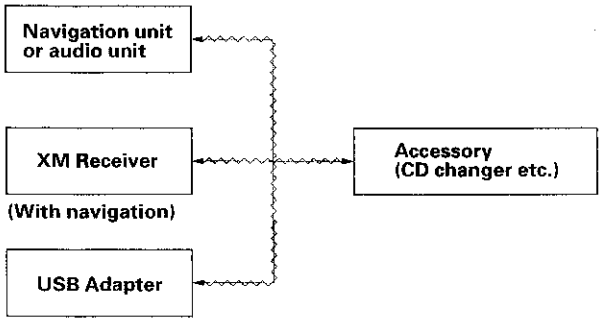

(cont'd)

System Description (cont'd)

With navigation

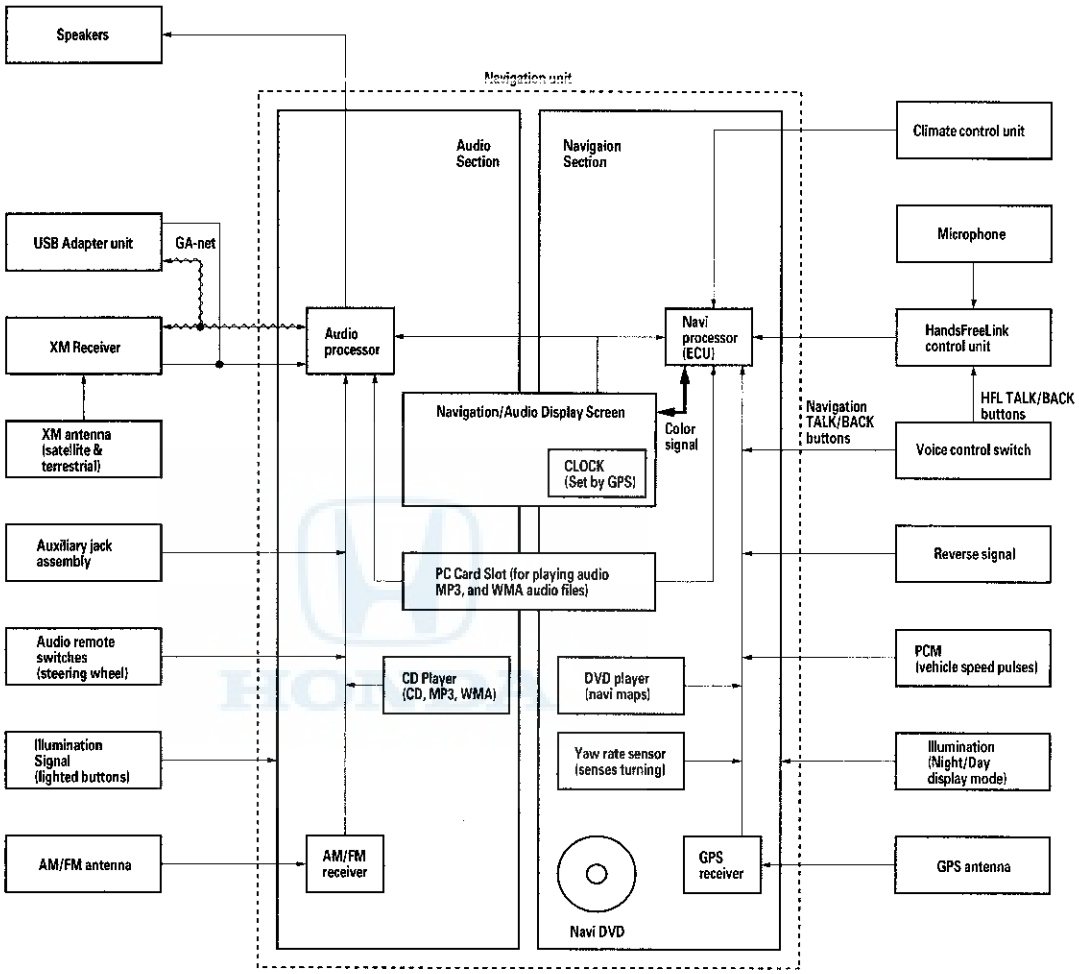

NOTE: All items may not apply to this vehicle. See the owner's manual for more information.

Audio Glossary

Item	Definition
Active noise cancellation	The active noise cancellation system cancels some of the vehicle noise. This occurs in the 1,500—2,400 rpm range. Microphones detect the low frequency sound, and the system outputs a canceling sound from the audio speaker.
AM (Amplitude Modulation)	The type of transmission used in the standard radio broadcast band from 530 to 1710 kHz.
Amplifier	A device that increases the level of a signal by increasing the current or voltage.
Antenna	A device used to send or receive electromagnetic waves through the air.
ATA (PC Card)	A type of card that has been tested for use in playing WMA, and MP3 music files in the PC Card slot. Sizes of up to 1 GB have been tested.
Audio remote switch	The switches on the steering wheel that control the audio system.
Auxiliary jack	Allows the customer to use a portable audio device to input audio recordings.
Balance	A control that changes the relative volume of the left and right channels.
Band	A range of frequencies between two definite limits. Bands are assigned by the Federal Communications Commission for specific uses.
Bass	An adjustment for the low frequency sounds of around 160 Hz and below.
Byte	A unit of storage for computer files and memory. A CD holds approximately 700 million bytes.
Cassette	Audio or video magnetic tape container having two reels. Customers can insert it for play back
Compact flash	A standard for small-size (3 x 4 cm), memory cards used in mobile computers, PDAs, digital cameras. Compact flash memory cards are available in size of 32 MB up to 4 GB or more and can be played in the audio PC slot. Sizes above 1 GB have not been tested.
CD (Compact Disc)	A 4.5-inch plastic disc containing digital audio recording that is played optically on a laser equipped player. Never use discs with a paper label. In a hot vehicle, labels can curl up and jam the unit.
CD (audio disc) changer	CD player that can store and play more than one CD. Two types are available. Some units accept CDs fed into the changer one at a time, and others accept a magazine (with CDs stacked in a container).
CD player	A component designed to play compact disc recordings using a laser optical pickup. The signal from a CD player usually requires amplification.
Decibels (db)	A method of measuring sound or radio signal strength received by the audio unit antenna.
Distortion	Inexact reproduction of an audio signal caused by playing music at levels the audio system cannot handle.
Dolby (noise reduction)	A processing system developed by Dolby Laboratories that reduces the background noise on recording media. The result is a cleaner playback from the audio system.
DUET	A serial data communication line used for sub display.
DVD (Digital Versatile Disc)	A 4.5-inch CD-like format used for storing movies with digital audio and video features. The DVD-A format is a DVD format designed for DVD audio systems. Some vehicles can play DVD and DVD-A formats.
Equalizer	A device that changes the relative volume of individual frequency bands to suit personal tastes of the listener.
Fader	The control that adjusts the relative volume levels of front and rear speakers in a four-speaker system.
Format	To prepare a PC Card to receive files this function is done on a PC. Always choose either FAT or FAT32, as the NTFS format is not accepted by the system. Pick the default sectors for the format method selected.
FM (Frequency Modulation)	The form of modulation used for radio and television sound transmission in most of the world. Less prone to interference than AM. The FM broadcast band in North America covers roughly 87.7 to 107.9 MHz.

(cont'd)

System Description (cont'd)

Audio Glossary

Item	Definition
GA-Net	The GA-Net allows the audio unit to communicate with all the audio and navigation components in a vehicle. If there is an open in the GA-Net or components, the entire audio and navigation system may appear inoperative.
GB (Gigabyte)	A unit of memory or disk storage equal to billion bytes (1000 million bytes).
HDD	Abbreviation for hard disc drive. They are sensitive to heat and it is not recommended that they be used in the PC card slot for playing audio files.
Hertz (Hz)	The unit of frequency equal to one cycle per second (cps). One kilohertz (kHz) equals 1,000 cps; one megahertz (MHz) equals 1 million cps.
Integrated amplifier	A component that combines a pre amp and a power amp into a single unit. A receiver combines an integrated amp and a tuner into a single unit.
Jewel case	The hard plastic case that contains a compact disc or DVD. Always use a jewel case to prevent scratches on the underside of a CD or DVD.
LCD (Liquid Crystal Display)	A type of digital display that changes reflectance or transmittance when an electrical field is applied to it.
Memory	Circuitry or devices that hold information in electrical or magnetic form, such as the AM/FM radio presets.
MB (Megabyte)	One million bytes. Written as 1 MB. Megabytes are used as a measure of digital storage space. For example, a CD can hold 650 MB.
Mic	An abbreviation for microphone. For vehicles with navigation, the microphone accepts navigation voice commands to control audio and navigation functions.
MP3 music files	MP3 is an audio coding format. MP3 is a popular audio compression format on the Internet and computers. CDs and PC Cards with these files can be played on some vehicle's audio system.
Mute	When the navigation gives guidance, the front speakers are muted (no music). When you use the voice control system, all of the speakers are muted.
Noise	Unwanted random sounds like buzzing, hiss, pops, static, whine, etc.
PC card	The slot used for playing MP3 and WMA music files. The PC Card is usually a combination of a small flash card in a PCMCIA adaptor that slides into the slot. The ATA, SD, and compact flash types of cards have been tested up to 1 GB.
PCMCIA	A computer standard for the slot that the PC card slides into. Another term for the PC card slot.
Processor	The part of an audio device that performs tasks/calculations. In the audio unit, the processor handles muting to allow the navi to speak its voice commands, and the decoding/playback of the sound files etc.
Radio	A head unit that combines a tuner, a preamplifier, and often a power-amplifier.
Route guidance (RG)	Spoken voice used for turn-by-turn navigation from the audio speakers.
SCF (Cold Start Fix) screens	These screens are displayed if the system requires a GPS initialization. The vehicle should be moved outside into an open area away from buildings/power lines.
Stereo	A recording of at least two channels where you can hear sound or music from the left or right side.
SD (Secure Digital) card	This compact type of memory card allows for fast data transfer and has built-in security functions. SD cards have a small write-protection switch on the side.
Shield	A metallic foil or braided wire layer surrounding conductors which are designed to prevent electrostatic or electromagnetic interference (noise) from external sources such as buzzing, or popping sounds heard on the speakers.
Speaker (Loudspeaker)	A device that converts electrical energy into acoustical energy (sound).
Speed-sensitive volume compensation (SVC)	The SVC increases the audio volume to compensate for increased interior noise when the vehicle drivers at freeway speeds.
Subwoofer	A loudspeaker made to reproduce the lowest audio frequencies, about 25 Hz to 125 Hz.

Audio Glossary

Item	Definition
Track	A sound recording on a CD, tape, or PC Card.
Treble	An adjustment to control the volume of the high frequency sounds.
Tuner	A component (or part of a component) that receives radio signals and selects one broadcast from many.
Tweeter	A speaker designed to reproduce the higher frequencies (treble) only.
USB	Universal Serial Bus. The USB is used for playing the compressed audio files (MP3, WMA, and AAC) on the external device through the audio unit.
Voice coil	A coil of wire wrapped around a tube and then attached to the speaker cone or diaphragm. When an audio signal is applied, the coil becomes an electromagnet and interacts with the permanent magnet causing the come or diaphragm to vibrate. We interpret this vibrations as sound.
Volume control	Allows you to control the loudness of the music.
WMA music file	Windows Media Audio File. This is an accepted format for music files to be played on either a CD-R, a CD-RW or a PC Card.
Woofer	A speaker that is designed to reproduce low (bass) frequencies only.
XM radio	Satellite based radio transmission, which also uses a ground based repeater network to ensure seamless reception. The channels originate from XM's broadcast center, in Washington, DC, and uplink to two satellites. These satellites transmit the signal across the entire continental United States.
XM receiver	The external component that receives and processes the XM signals from the XM satellites, and terrestrial (land) stations. The audio unit communicates to the XM receiver over the GA-Net bus.

HONDA

(cont'd)

System Description (cont'd)

Audio Unit Connector for Inputs and Outputs

NOTE: Refer to the navigation section for the connector C, D, and H inputs and outputs (see page 23-265).

With navigation (Navigation unit)

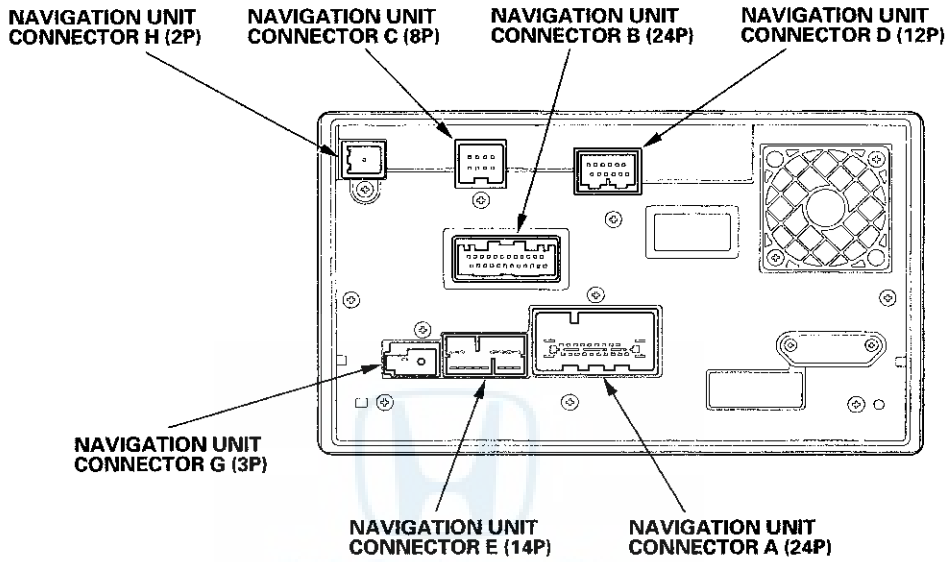

NAVIGATION UNIT CONNECTOR A (24P)

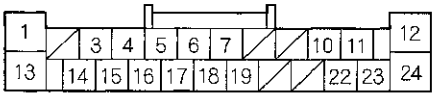

Wire side of female terminals

Cavity	Wire Color	Connect to
A1	RED	Dash lights brightness controller (ILL−)
A3	LT BLU	Data link connector (DLC) (K-LINE)
A4	GRN	Multiplex integrated control unit (MICU) (SCTY RADIO)
A5	BRN	Audio remote switch (AUDIO REMOTE GND)
A6	ORN	Right rear speaker (RR R−)
A7	BLU	Right rear speaker (RR R+)
A10	BRN	Left rear speaker (RR L−)
A11	YEL	Left rear speaker (RR L+)
A12	BLK	Body ground to G505 (GND)
A13	GRY	No. 14 (7.5 A) fuse in the under-dash fuse/relay box (ILL+)
A14	PUR	No. 35 (10 A) fuse in the under-dash fuse/relay box (ACC RADIO)
A15	BLU	PCM (VSP)
A16	PNK	Audio remote switch (AUDIO REMOTE SW)
A18	BRN	Front passenger's door speaker, right front tweeter (FR R−)
A19	GRY	Front passenger's door speaker, right front tweeter (FR R+)
A22	PNK	Driver's door speaker, left tweeter (FR L−)
A23	LT GRN	Driver's door speaker, left tweeter (FR L+)
A24	WHT	No. 23 (10 A) fuse in the under-hood fuse/relay box (+B BACK UP)

NAVIGATION UNIT CONNECTOR B (24P)

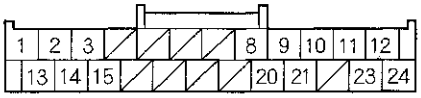

Wire side of female terminals

Cavity	Wire Color	Connect to
B1	BRN	Auxiliary jack assembly (AUX S GND)
B2	GRY	Shield for terminals No. 1, No. 3, No. 11, No. 12, and No. 13 (AUX SH GND)
B3	BLU	Auxiliary jack assembly (AUX GND)
B8	LT BLU	HandsFreeLink control unit (HFL MUTE)
B9	PNK	HandsFreeLink control unit (TELM SIG−)
B10	GRY	Shield for terminals No. 11, No. 12, No. 23, and No. 24 (HFL/NAV COMM SH)
B11	GRN	HandsFreeLink control unit (HFL/NAV COMM2)
B12	WHT	HandsFreeLink control unit (HFL/NAV COMM4)
B13	YEL	Auxiliary jack assembly (AUX L)
B14	GRN	Auxiliary jack assembly (AUX R)
B15	WHT	Auxiliary jack assembly (AUX DET)
B20	LT GRN	HandsFreeLink control unit (HFL ICON)
B21	BLU	HandsFreeLink control unit (TELM SIG+)
B23	BLK	HandsFreeLink control unit (HFL/NAV COMM1)
B24	RED	HandsFreeLink control unit (HFL/NAV COMM3)

*: The shielded wires have a heat-shrunk tube insulating the outside of the wire. The color of the insulating tube, typically black or dark gray, may not match the color of the wire listed on the schematic.

(cont'd)

System Description (cont'd)

NAVIGATION UNIT CONNECTOR E (14P)

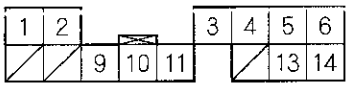

Wire side of female terminals

Cavity	Wire Color	Connect to
E1	BLU	XM receiver, USB adapter unit (+B)
E2	LT BLU	XM receiver, USB adapter unit (SYS ACC)
E3	BRN*	Shield for terminals No. 9 and No. 10 (GA-NET BUS SH)
E4	GRY*	Shield for terminals No. 5, No. 6, No. 13, and No. 14 (SAT SH GND)
E5	WHT	XM receiver, USB adapter unit (AUDIO R+)
E6	RED	XM receiver, USB adapter unit (AUDIO L+)
E9	BLU	XM receiver, USB adapter unit (GA-NET BUS+)
E10	PNK	XM receiver, USB adapter unit (GA-NET BUS−)
E11	BLK	XM receiver, USB adapter unit (GND)
E13	BLK	XM receiver, USB adapter unit (AUDIO R−)
E14	GRN	XM receiver, USB adapter unit (AUDIO L−)

*: The shielded wires have a heat-shrunk tube insulating the outside of the wire. The color of the insulating tube, typically black or dark gray, may not match the color of the wire listed on the schematic.

NAVIGATION UNIT CONNECTOR G (3P)

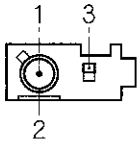

Terminal side of female terminals

Cavity	Wire Color	Connect to
G1	———	AM/FM/XM antenna (RF IN)
G2	———	Shield for terminal No. 1 (RF SH)
G3	———	AM/FM/XM antenna (ANT +B)

Without navigation

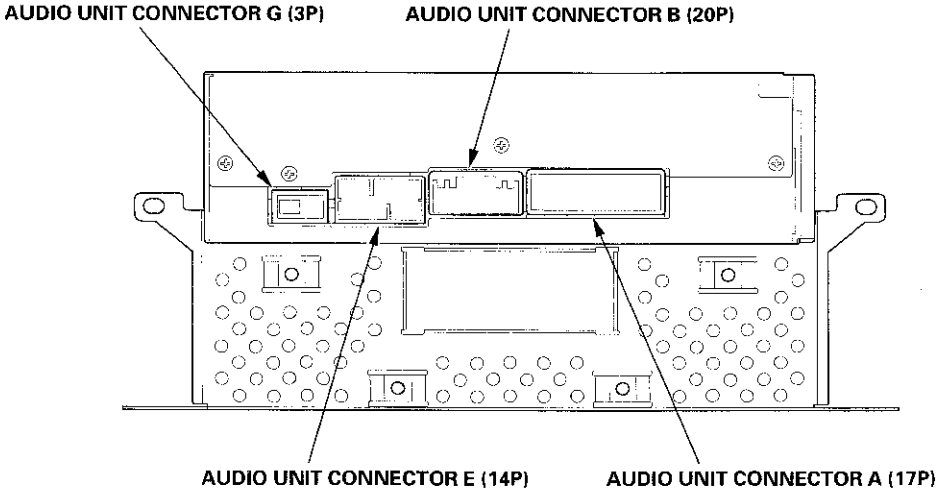

AUDIO UNIT CONNECTOR A (17P)

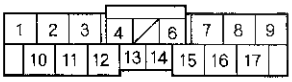

Wire side of female terminals

Cavity	Wire Color	Connect to
A1	RED	Dash lights brightness controller
A2	BRN	Left rear speaker (−)
A3	PNK	Driver's door speaker (−), Left tweeter (−)
A4	GRN	Multiplex integrated control unit (MICU) (SCTY RADIO)
A6	LT BLU	Multiplex integrated control unit (MICU) (K-LINE)
A7	BRN	Front passenger's door speaker (−), Right tweeter (−)
A8	ORN	Right rear speaker (−)
A9	BLK	Body ground to G505 (GND)
A10	GRY	No. 14 (7.5 A) fuse in the under-dash fuse/relay box (ILL+)
A11	YEL	Left rear speaker (+)
A12	LT GRN	Driver's door speaker (+), Left tweeter (+)
A13	BLU	PCM (VSP)
A14	PUR	No. 35 (7.5 A) fuse in the under-dash fuse/relay box (ACC RADIO)
A15	GRY	Front passenger's door speaker (+), Right tweeter (+)
A16	BLU	Right rear speaker (+)
A17	WHT	No. 23 (10 A) fuse in the under-hood fuse/relay box (+B BACK UP)

(cont'd)

System Description (cont'd)

AUDIO UNIT CONNECTOR B (20P)

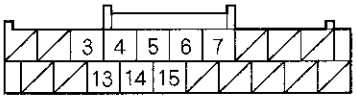

Wire side of female terminals

Cavity	Wire Color	Connect to
B3	BRN	Auxiliary jack assembly (AUX S GND)
B4	GRY*	Shield for terminals No. 3, No. 5, No. 13, No. 14, and No.15 (AUX SH GND)
B5	BLU	Auxiliary jack assembly (AUX GND)
B6	BRN	Audio remote switch (AUDIO REMOTE GND)
B7	PNK	Audio remote switch (AUDIO REMOTE SW)
B13	YEL	Auxiliary jack assembly (AUX L)
B14	GRN	Auxiliary jack assembly (AUX R)
B15	WHT	Auxiliary jack assembly (AUX DET)

*: The shielded wires have a heat-shrunk tube insulating the outside of the wire. The color of the insulating tube, typically black or dark gray, may not match the color of the wire listed on the schematic.

AUDIO UNIT CONNECTOR E (14P)

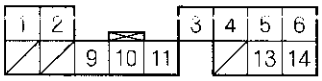

Wire side of female terminals

Cavity	Wire Color	Connect to
E1	BLU	USB adapter unit (+B)
E2	LT BLU	USB adapter unit (SYS ACC)
E3	BRN*	Shield for terminals No. 9 and No. 10 (GA-NET BUS SH)
E4	GRY*	Shield for terminals No. 5, No. 6, No. 13, and No. 14 (SAT SH GND)
E5	WHT	USB adapter unit (SAT R+)
E6	RED	USB adapter unit (SAT L+)
E9	BLU	USB adapter unit (GA-NET BUS+)
E10	PNK	USB adapter unit (GA-NET BUS−)
E11	BLK	USB adapter unit (GND)
E13	BLK	USB adapter unit (SAT R−)
E14	GRN	USB adapter unit (SAT L−)

*: The shielded wires have a heat-shrunk tube insulating the outside of the wire. The color of the insulating tube, typically black or dark gray, may not match the color of the wire listed on the schematic.

AUDIO UNIT CONNECTOR G (3P)

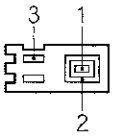

Terminal side of female terminals

Cavity	Wire Color	Connect to
G1	———	AM/FM antenna (RF IN)
G2	———	Shield for terminal No. 1 (RF SH)
G3	———	AM/FM antenna (ANT +B)

XM Receiver Connector for Inputs and Outputs (With navigation)

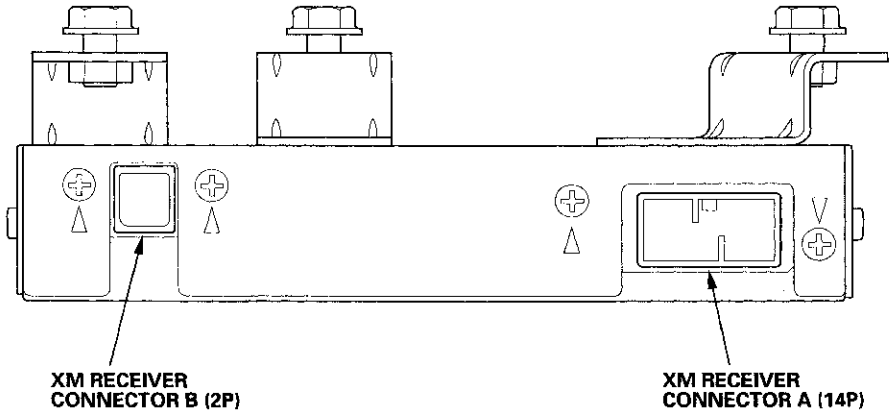

XM RECEIVER CONNECTOR A (14P)

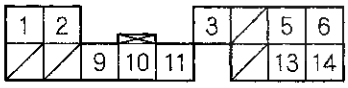

Wire side of female terminals

Cavity	Wire Color	Connect to
A1	BLU	Navigation unit, USB adapter unit (+B)
A2	LT BLU	Navigation unit, USB adapter unit (SYS ACC)
A3	BRN*	Shield for terminals No. 9 and No. 10 (GA-NET SH GND)
A5	WHT	Navigation unit, USB adapter unit (SAT R+)
A6	RED	Navigation unit, USB adapter unit (SAT L+)
A9	BLU	Navigation unit, USB adapter unit (GA-NET BUS+)
A10	PNK	Navigation unit, USB adapter unit (GA-NET BUS−)
A11	BLK	Navigation unit, USB adapter unit (GND)
A13	BLK	Navigation unit, USB adapter unit (SAT R−)
A14	GRN	Navigation unit, USB adapter unit (SAT L−)

*: The shielded wires have a heat-shrunk tube insulating the outside of the wire. The color of the insulating tube, typically black or dark gray, may not match the color of the wire listed on the schematic.

XM RECEIVER CONNECTOR B (2P)

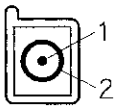

Terminal side of female terminals

Cavity	Wire Color	Connect to
B1	———	Satellite signal antenna (SIG)
B2	———	Shield for terminal No. 1 (SH (XM))

(cont'd)

System Description (cont'd)

USB Adapter Unit Connector for Inputs and Outputs

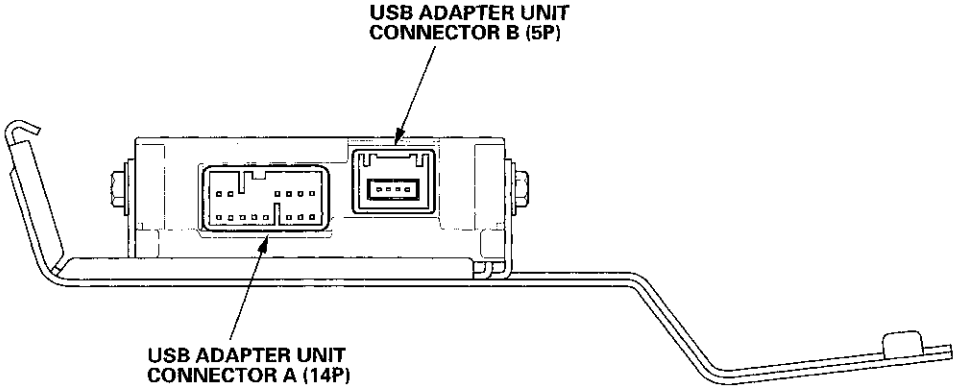

USB ADAPTER UNIT CONNECTOR A (14P)

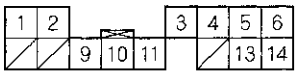

Wire side of female terminals

Cavity	Wire Color	Connect to
A1	BLU	Navigation unit (+B)
A2	LT BLU	Navigation unit (SYS ACC)
A3	BRN*	Shield for terminals No. 9 and No. 10 (GA-NET BUS SH)
A4	GRY*	Shield for terminals No. 5, No. 6, No. 13, and No. 14 (AUDIO SH)
A5	WHT	Navigation unit, XM receiver (SAT R+)
A6	RED	Navigation unit, XM receiver (SAT L+)
A9	BLU	Navigation unit, XM receiver (GA-NET BUS+)
A10	PNK	Navigation unit, XM receiver (GA-NET BUS−)
A11	BLK	Navigation unit (GND)
A13	BLK	Navigation unit, XM receiver (SAT R−)
A14	GRN	Navigation unit, XM receiver (SAT L−)

*: The shielded wires have a heat-shrunk tube insulating the outside of the wire. The color of the insulating tube, typically black or dark gray, may not match the color of the wire listed on the schematic.

USB ADAPTER UNIT CONNECTOR B (5P)

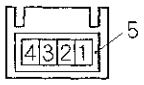

Terminal side of female terminals

Cavity	Wire Color	Connect to
B1	———	USB adapter (USB VBUS)
B2	———	USB adapter (USB DATA−)
B3	———	USB adapter (USB DATA+)
B4	———	USB adapter (USB GND)
B5	———	Shield for terminals No. 1, No. 2, No. 3, and No. 4 (USB SH)

Auxiliary Jack Assembly Connector for Inputs and Outputs

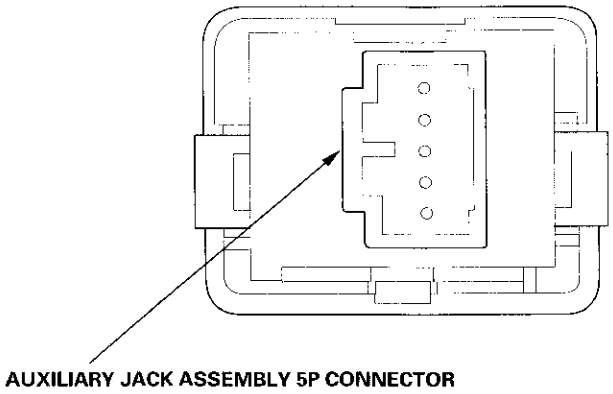

AUXILIARY JACK ASSEMBLY 5P CONNECTOR

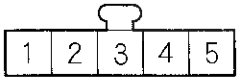

Wire side of female terminals

With navigation

Cavity	Wire Color	Connect to
1	WHT	Navigation unit (AUX DET)
2	BLU	Navigation unit (AUX GND)
3	BRN	Navigation unit (AUX S GND)
4	YEL	Navigation unit (AUX L)
5	GRN	Navigation unit (AUX R)

Without navigation

Cavity	Wire Color	Connect to
1	WHT	Audio Unit (AUX DET)
2	BLU	Audio Unit (AUX GND)
3	BRN	Audio Unit (AUX S GND)
4	YEL	Audio Unit (AUX L)
5	GRN	Audio Unit (AUX R)

Circuit Diagram

With Navigation

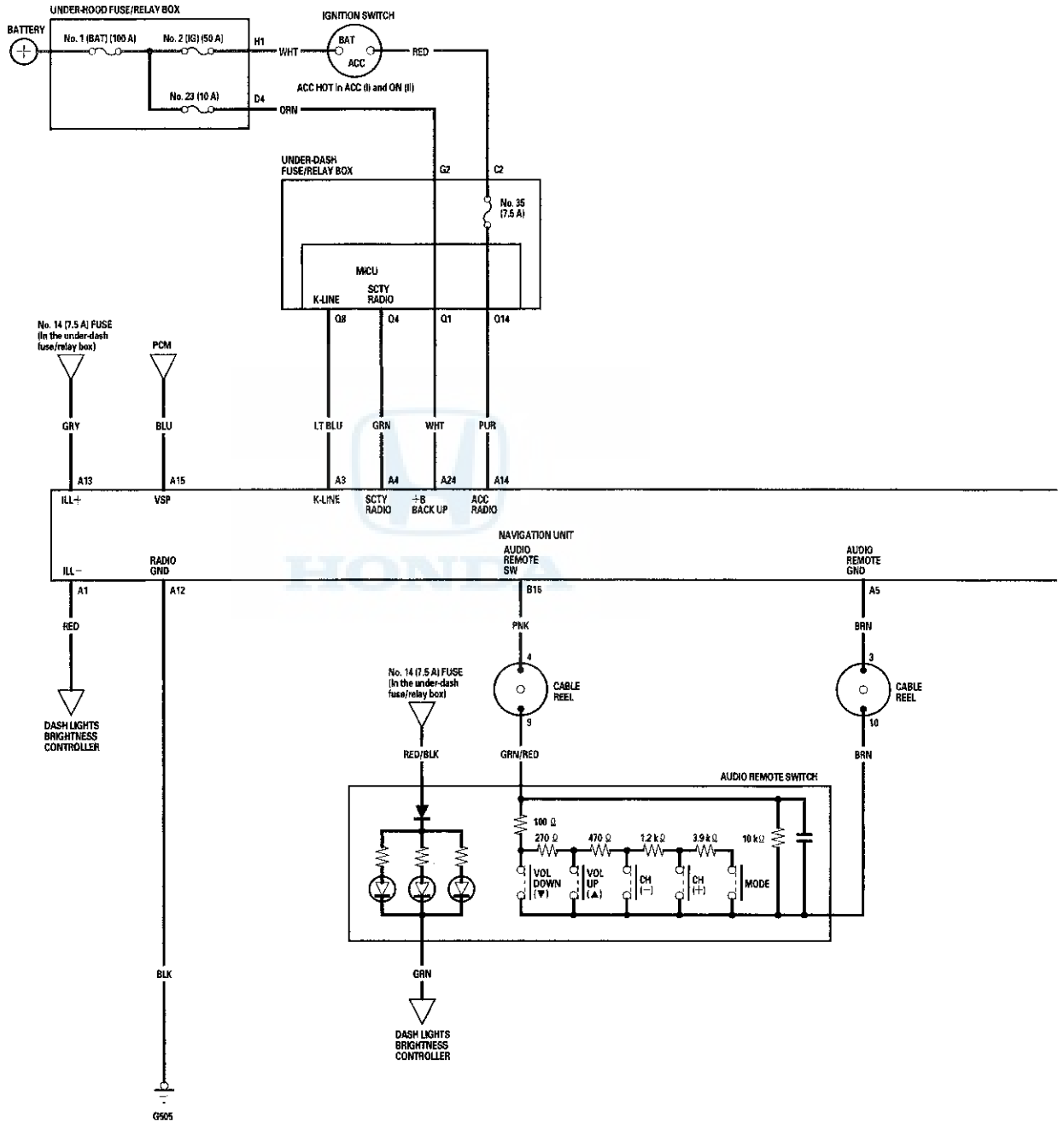

*: The shielded wires have a heat-shrunk tube insulating the outside of the wire. The color of the insulating tube, typically black or dark gray, may not match the color of the wire listed on the schematic.

- - - - - - - : Shielding

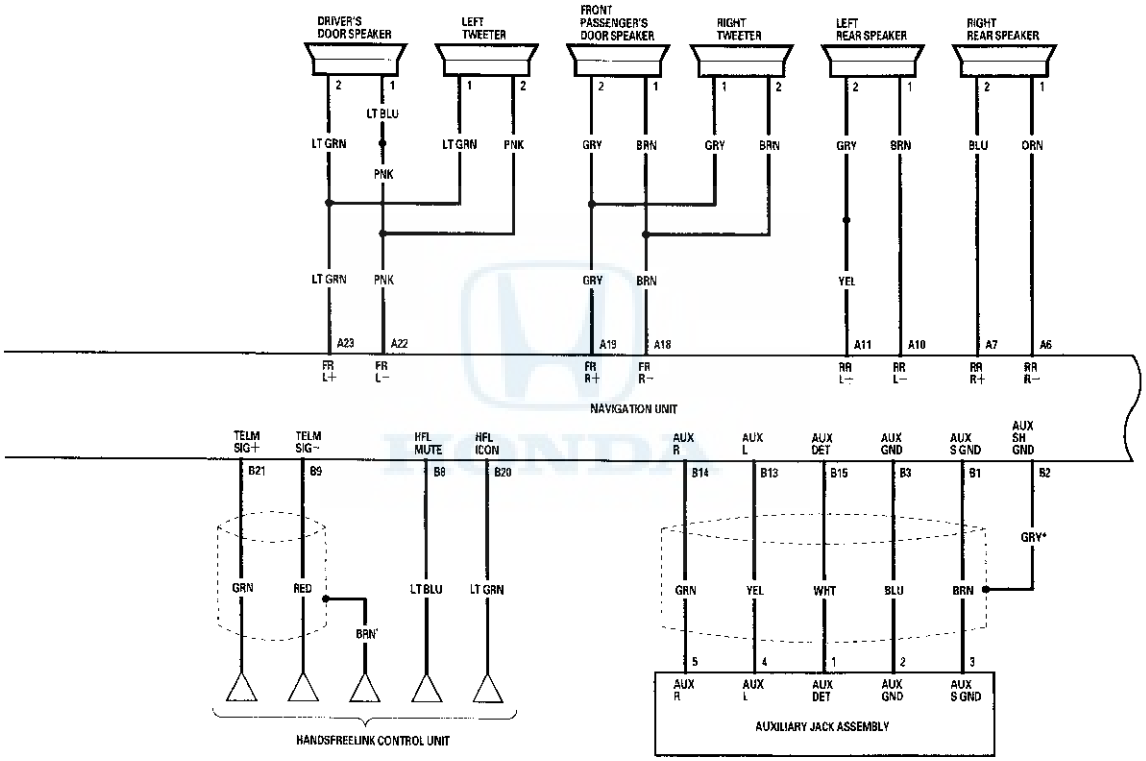

(cont'd)

Circuit Diagram (cont'd)

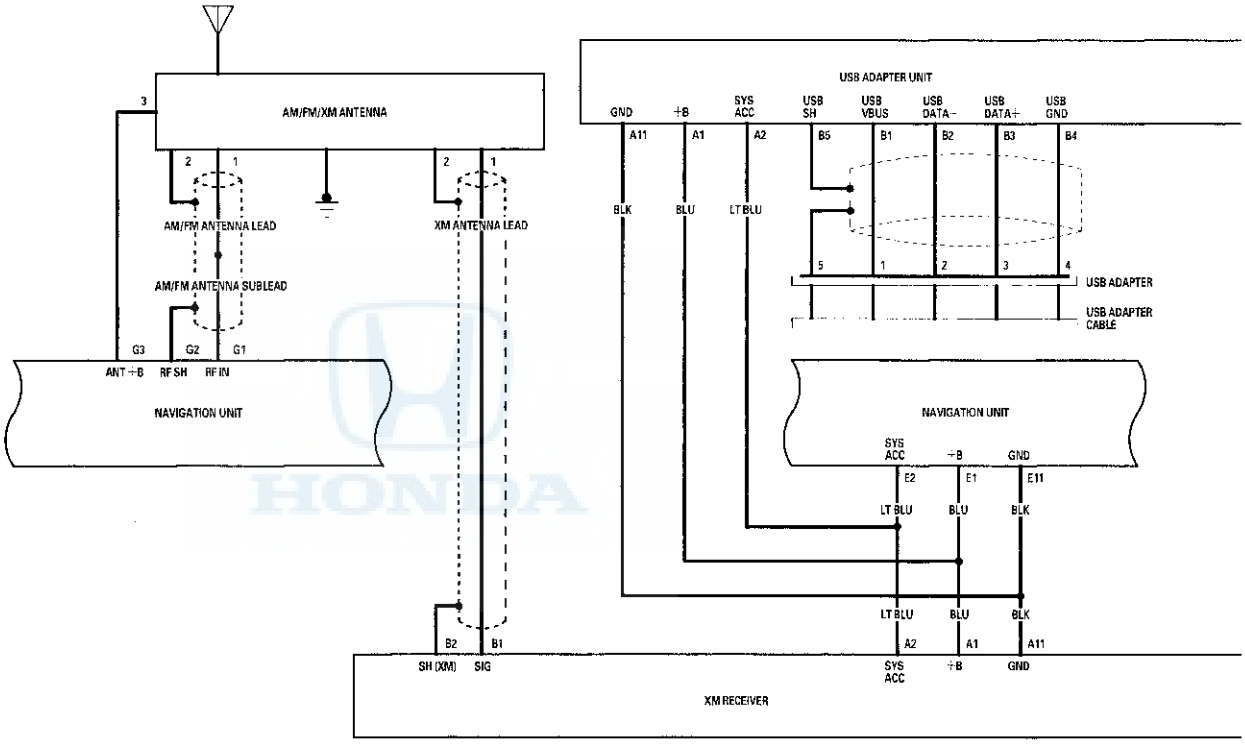

*1: The shielded wires have a heat-shrunk tube insulating the outside of the wire. The color of the insulating tube, typically black or dark gray, may not match the color of the wire listed on the schematic.

: GA-NET
: Shielding

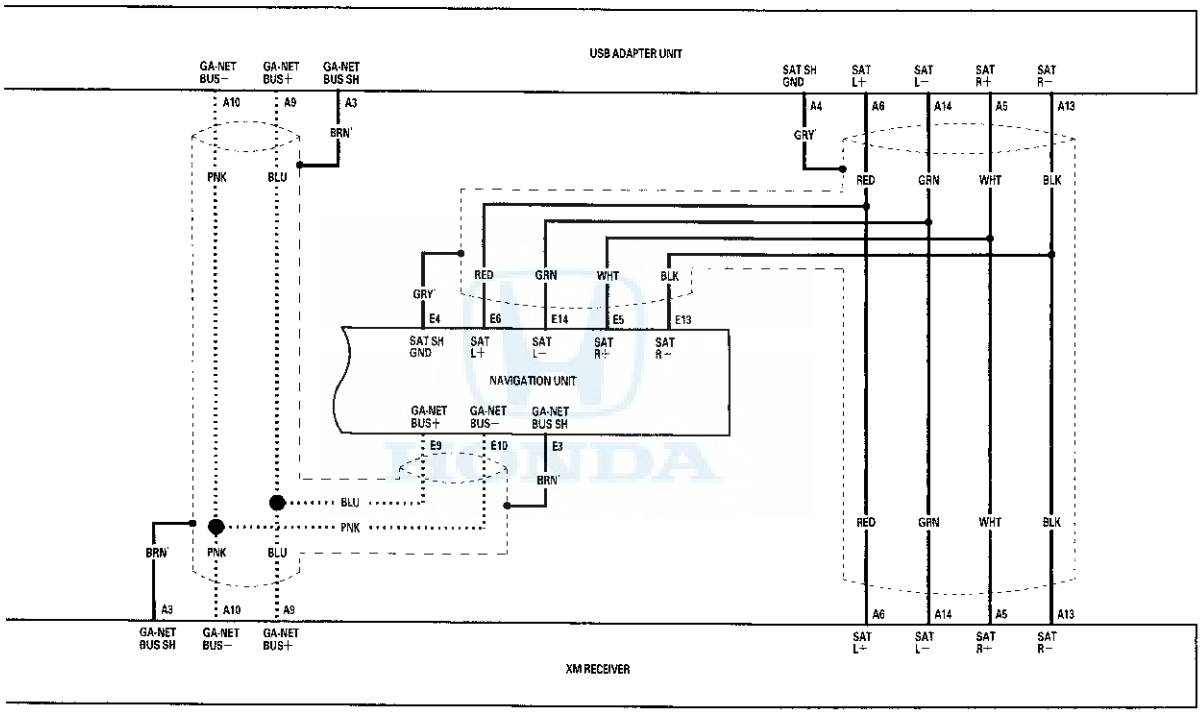

Circuit Diagram (cont'd)

Without Navigation

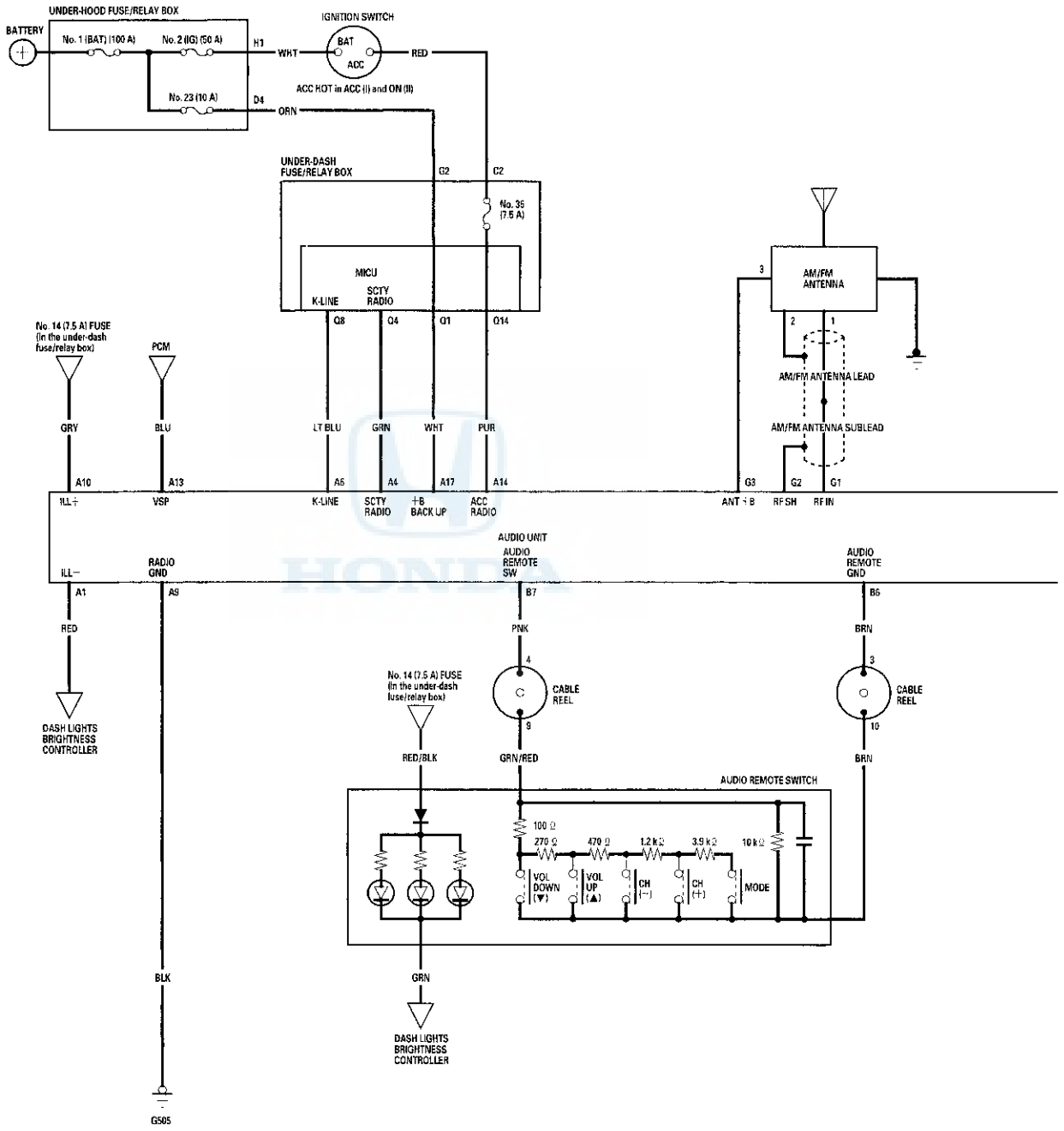

*: The shielded wires have a heat-shrunk tube insulating the outside of the wire. The color of the insulating tube, typically black or dark gray, may not match the color of the wire listed on the schematic.

• • • • • • • • • : GA-NET

- - - - - - - - : Shielding

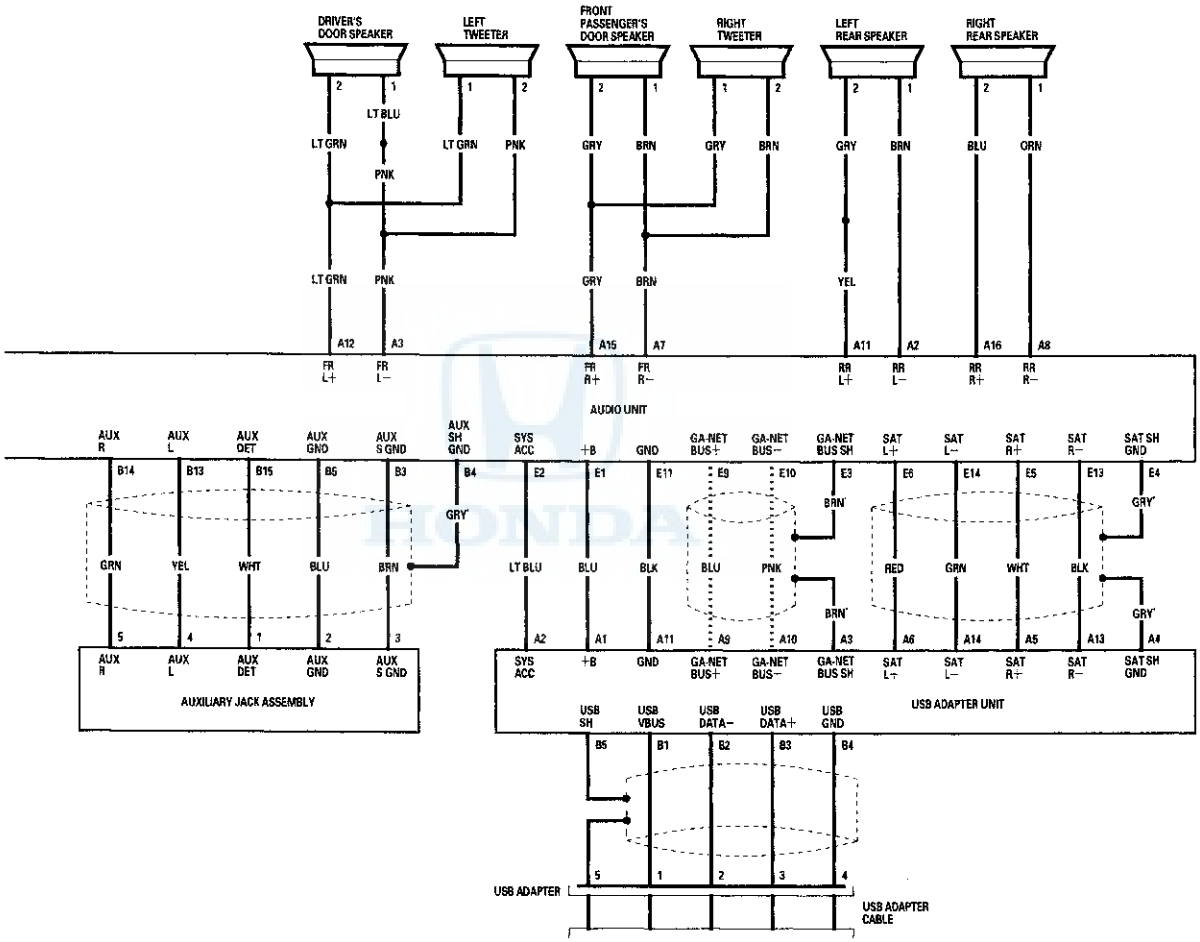

Self-diagnostic Function

Without Navigation

The audio system has a self-diagnostic function.

How to Obtain the Audio Unit Serial Number

To obtain the audio unit serial number on a vehicle, do the following:

NOTE:
- This procedure can only be performed after the battery power is disconnected once and reconnected to the audio unit and the audio unit displays CODE when the radio is turned on.
- To obtain the navigation unit serial number, refer to ECU info in the navigation system diagnostic mode (see page 23-280).

1. Turn the ignition switch to ON (II).
2. Make sure the audio system is turned off.
3. Push and hold the preset No. 1 and No. 6 buttons.
4. While holding the buttons, push the VOL PUSH PWR knob (A) to ON.

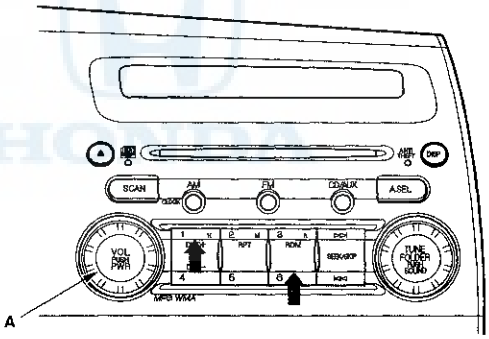

5. Release the buttons and the self-diagnostic begins.
6. The display shows a 8 digit serial number.

   Eight digits of the serial number (example 12345678)

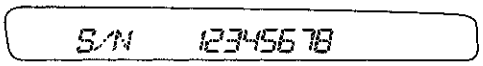

7. Use all 8 numbers as the serial number when using the Interactive Network (*i*N) to retrieve the 5 digit anti-theft code.
8. To end the self-diagnostic function, turn the audio unit off, or turn the ignition switch to LOCK (0).

How to check for audio system condition

NOTE:
- The audio unit must be in the code enter screen before performing the self-diagnostic function.
- The self-diagnostic function does not find every problem with the audio system. Check any official Honda service website for more information about the audio system.

1. Turn the ignition switch to ON (II).

2. Make sure the audio system is turned off.

3. Push and hold the preset No. 1 and No. 6 buttons.

4. While holding the buttons, push the VOL PUSH PWR knob (A) to ON.

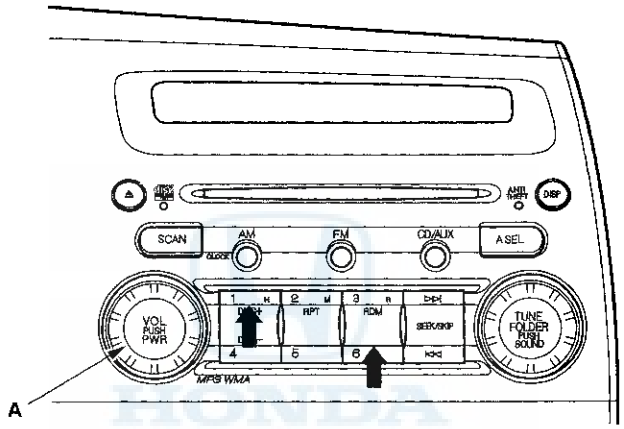

5. Release the buttons and the self-diagnostic begins.

6. When you are in self-diagnostic mode, pressing a preset button starts, the input will trigger the diagnostic mode that is assigned to that preset switch.

   No. 3 button
   Entire LCD lighting/light-out mode: Turns on/off the entire LCD to show the presence or absence of an LCD failure.

   No. 4 button
   Duty indication mode (for the Illumination dim): Indicates the duty for the Illumination dim. When the dash lights are on.

   No. 5 button
   Vehicle speed pulse indication mode: Indicates the vehicle speed pulse.

   FM button (Push and hold 5 sec.)
   Reception level check mode: Indicates the reception level (db). When entering the reception level check mode, the AM/FM button is used to change the main/sub antenna. See Reception level indication for more information.

   CD button (Push and hold 5 sec.)
   DRAM residual quantity indication mode: Indicates the DRAM residual quantity.

(cont'd)

Self-diagnostic Function (cont'd)

7. To end the self-diagnostic function, turn the audio unit off, or turn the ignition switch to LOCK (0).

Display Specifications

Entry LCD Lighting
No. 3 button

Entry LCD Lights-outs
No. 3 button

Duty (for the illumination) indication
No. 4 button

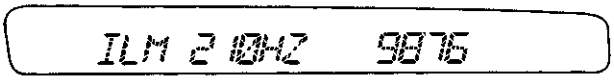

Vehicle speed pulse indication
No. 5 button

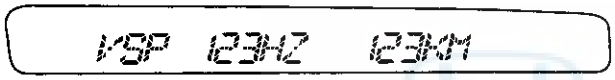

Reception level indication
FM button

DRAM residual quantity indication
CD button

Speaker check mode

8. Turn off the audio unit.

9. Push and hold the No. 1 and No. 3 buttons. While holding the buttons, push the VOL push PWR knob to ON. Release the buttons and the speaker check mode begins. A low-frequency hum should sound for about one minute. Change the test speaker by pushing the SKIP button. If you find a speaker(s) with no sound, check the speaker and harness connections. If the connections are good, replace the speaker and retest.

10. To end the self-diagnostic function, turn the audio unit off, or turn the ignition switch to LOCK (0).

Reception level indication mode

This diagnostic screen checks the audio unit's reception level. This level then can be used in the diagnosis of audio unit reception quality. The reception level is displayed in decibels (dB).

Preperation:
- Park the vehicle outdoors in an appropriate location for good radio reception.
- Tune to a powerful local FM radio station and write down the radio station number. Tune to a powerful local AM radio station and write down the radio station number.

1. Enter the reception level indication mode in the self-diagnostic function. The AM/FM antenna amplifier is on (A.SEL or TP is not displayed in the audio-HVAC display).

2. Tune to the FM radio station you wrote down in Preperation using the TUNING knob, and note the decibel level of that station when you release the button.

3. Press and release the A.SEL button to turn the AM/FM antenna amplifier off (A.SEL or TP is now displayed in the audio-HVAC display).

4. Tune to the AM radio station you wrote down in Preperation using the TUNING knob, and note the decibel level of that station when you release the button.

5. Press and release the A.SEL button to turn the AM/FM antenna amplifier back on (A.SEL or TP is not displayed in the audio-HVAC display).

6. Turn the ignition switch to LOCK (0) or audio unit off to exit the test mode.

7. Compare your results to a known-good, (make sure it is the same year and trim level) in the same location and direction, and under the same environmental conditions.

Audio System ('09 models)

Error Codes

The audio system displays error codes when a problem is detected with the disc changer, the disc, the XM radio, or the anti-theft code.
NOTE: This is not a complete list of audio error codes. Refer to symptom troubleshooting, or go to any official Honda service website for more service information.

CD Error Codes (with navigation)

Error Code Displayed	Possible Cause	Solution
DISC ERROR	The system cannot read the disc because an audio or video DVD is inserted into the unit. The CD may be inserted upside down.	Verify that the unit functions with a standard mass production CD.
MECH ERROR	There is a problem with the mechanism A CD label may be jammed in the mechanism.	Replace the navigation unit.

CD Error Codes (without navigation)

Error Code Displayed	Possible Cause	Solution
BAD DISC-PLEASE CHECK OWNERS MANUAL PUSH EJECT	• CD label jammed in the mechanism. • CD eject mechanism or motor is inoperative. • CD spindle motor won't spin up the CD. • The wrong type disc is inserted.	Press the EJECT button and hold it for 5 seconds. If the disc does not eject, try again. If the disc still won't eject, replace the unit.

CD Error Codes

Error Code Displayed	Possible Cause	Solution
HEAT ERROR	CD player is too hot. This can happen if the vehicle is parked in the sunlight all day.	The unit should function normally when it cools off.
FORMAT	Audio unit cannot read the files on the CD or CD-R.	Current track is skipped. The next supported track or file plays automatically. • Verify that CD, CD-R or CD-RW file names end in CD-A or WMA. • Verify that CD, CD-R or CD-RW with compressed music formats end in MP3 or WMA. • Other file formats like I-tunes or Ogg are not recognized. • WMA files may have (DRM) copy protection, and cannot be read.

USB Error Codes

Error Code Displayed	Possible Cause	Solution
FILE ERROR	The audio unit cannot read the file(s).	Check the files in the USB device. There is a possibility that the files have been damaged.
MEDIA ERROR	Unsupported USB device is connected.	Connect the applicable USB device. (see Owner's Manual)
USB NO DATA	USB device is not connected.	If the code appears when the USB devices is connected, go to USB device does not function: • With navigation (see page 23-214). • Without navigation (see page 23-217).

XM Error Codes

Error Code Displayed	Possible Cause	Solution
LOADING	XM radio is acquiring audio or program information.	Wait until the radio receives the information.
(XM) OFF AIR	XM channel not in service.	Try another XM channel.
(XM) NO SIGNAL	Loss of signal.	Both terrestrial and satellite antennas have lost signal. Park the vehicle outside with a clear view of the southern horizon.
(XM) UPDATING	XM radio is receiving information update from the network.	This message disappears once the update finishes.
(XM) CHECK ANTENNA (XM) ANTENNA ERROR	XM antenna error.	Repair open or short in the satellite antenna. Substitute the XM antenna with a known-good one, and recheck. If the error is gone, replace the original XM antenna. If the error is still present, replace the antenna lead.
———	No signal from XM.	Check a known-good vehicle with XM radio. If the known-good vehicle has the same symptoms, contact XM Satellite Radio at 880-852-9696.

NOTE: Do these checks with the vehicle parked outside with a clear view of the southern horizon.

Audio Unit Error Codes

Error Code Displayed	Possible Cause	Solution
CODE ERROR 1	Anti-theft code mismatch (1st try).	Enter the correct anti-theft code.
CODE ERROR E	Anti-theft code mismatch (10th try).	Remove the No. 23 (10 A) fuse in the under-hood fuse/relay box, then reinsert it. You will have 10 more tries to enter the correct anti-theft code.

Symptom Troubleshooting

Poor AM or FM radio reception or interference (with navigation)

NOTE:
- Check the vehicle battery condition first.
- Check for aftermarket accessories including cell phones and chargers plugged into the vehicle accessory power sockets.
- Check the connectors for poor connections or loose terminals.
- Check the radio reception in an open area. Compare it to a known-good vehicle whenever possible. Poor reception/interference can be caused by the following:
  - The radio station is far away.
  - Atmospheric conditions are unfavorable.
  - Tall buildings, mountains, or high-voltage power lines are nearby.
  - Aftermarket metallic wi ndow tinting or electronic accessories.

1. Turn the ignition switch to ON (II).

2. Do the seek stop test (see page 23-231).

   Is the test vehicle within 10 % of the known-good vehicle?

   YES—Multipath interference or weak station. Operation is normal.■

   NO—Go to step 3.

3. Check if the radio reception/interference is the same in several locations.

   Is the reception/interference the same?

   YES—Go to step 4.

   NO—Multipath interference or weak station. Operation is normal.■

4. Start the engine.

5. Check the reception/interference.

   Is there noise (static or whine) only with the engine running?

   YES—Check the antenna and radio grounds. If OK, check the charging system and the ignition system.■

   NO—Go to step 6.

6. Turn the ignition switch to LOCK (0).

7. Check the AM/FM/XM antenna or AM/FM antenna mast for cracks or other damage. Verify that the AM/FM/XM antenna or AM/FM antenna mast is not loose.

   NOTE: Do not use any tools to tighten the AM/FM/XM antenna or AM/FM antenna mast.

   Is there any damage?

   YES—Replace the AM/FM/XM antenna mast (see page 23-239), or AM/FM antenna mast (see page 23-238).■

   NO—Go to step 8.

8. Disconnect the AM/FM antenna lead 3P connector from the AM/FM/XM antenna or AM/FM antenna.

9. Turn the ignition switch to ON (II) and turn ON the navigation unit.

10. Measure the voltage between the AM/FM/XM antenna or AM/FM antenna 3P connector terminal No. 3 and body ground.

AM/FM/XM ANTENNA 3P CONNECTOR or AM/FM ANTENNA 3P CONNECTOR

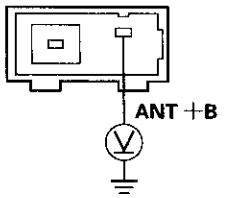

Terminal side of male terminals

Is there battery voltage?

YES—Go to step 11.

NO—Go to step 17.

11. Turn the ignition switch to LOCK (0).

12. Remove the navigation unit (see page 23-330).

13. Check for continuity between navigation unit connector G (3P) terminal No. 1 and the AM/FM/XM antenna or AM/FM antenna 3P connector terminal No. 1.

NAVIGATION UNIT CONNECTOR G (3P)
Terminal side of female terminals

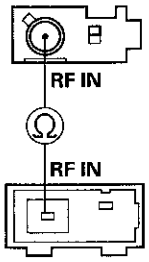

AM/FM/XM ANTENNA 3P CONNECTOR or AM/FM ANTENNA 3P CONNECTOR
Terminal side of male terminals

Is there continuity?

YES—Go to step 14.

NO—Replace the AM/FM antenna lead and/or sublead. ■

14. Check for continuity between navigation unit connector G (3P) terminal No. 1 and body ground.

NAVIGATION UNIT CONNECTOR G (3P)

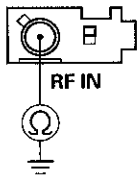

Terminal side of female terminals

Is there continuity?

YES—Replace the AM/FM antenna lead and/or sublead. ■

NO—Go to step 15.

(cont'd)

Symptom Troubleshooting (cont'd)

Poor AM or FM radio reception or interference (without navigation)

NOTE:
- Check the vehicle battery condition first.
- Check for aftermarket accessories including cell phones and chargers plugged into the vehicle accessory power sockets.
- Check the connectors for poor connections or loose terminals.
- Check the radio reception in an open area. Compare it to a known-good vehicle whenever possible. Poor reception/interference can be caused by the following:
  - The radio station is far away.
  - Atmospheric conditions are unfavorable.
  - Tall buildings, mountains, or high-voltage power lines are nearby.
  - Aftermarket metallic wi ndow tinting or electronic accessories.

1. Turn the ignition switch to ON (II).

2. Do the seek stop test (see page 23-231).

   Is the test vehicle within 10 % of the known-good vehicle?

   YES—Multipath interference or weak station. Operation is normal.■

   NO—Go to step 3.

3. Check if the radio reception/interference is the same in several locations.

   Is the reception/interference the same?

   YES—Go to step 4.

   NO—Multipath interference or weak station. Operation is normal.■

4. Start the engine.

5. Check the reception/interference.

   Is there noise (static or whine) only with the engine running?

   YES—Check the antenna and radio grounds. If OK, check the charging system and the ignition system.■

   NO—Go to step 6.

6. Turn the ignition switch to LOCK (0).

7. Check the AM/FM antenna mast for cracks or other damage. Verify that the AM/FM antenna mast is not loose.

   NOTE: Do not use any tools to tighten the AM/FM antenna mast.

   Is there any damage?

   YES—Replace the AM/FM antenna mast (see page 23-238).■

   NO—Go to step 8.

18. Remove the navigation unit (see page 23-330).

19. Check for continuity between navigation unit connector G (3P) terminal No. 3 and the AM/FM/XM antenna or AM/FM antenna 3P connector terminal No. 3.

NAVIGATION UNIT CONNECTOR G (3P)
Terminal side of female terminals

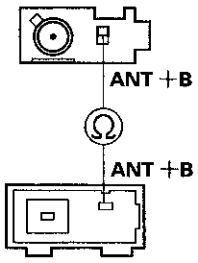

AM/FM/XM ANTENNA 3P CONNECTOR or AM/FM ANTENNA 3P CONNECTOR
Terminal side of male terminals

Is there continuity?

YES—Go to step 20.

NO—Repair open in the wire between the navigation unit and the AM/FM/XM antenna or AM/FM antenna.■

20. Check for continuity between the AM/FM/XM antenna connector (3P) or AM/FM antenna connector (3P) terminal No. 3 and body ground.

AM/FM/XM ANTENNA 3P CONNECTOR or AM/FM ANTENNA 3P CONNECTOR

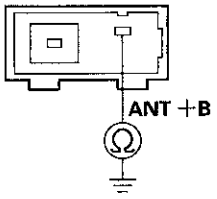

Terminal side of male terminals

Is there continuity?

YES—Repair short in the wire between the navigation unit and the AM/FM/XM antenna or AM/FM antenna.■

NO—Substitute a known-good navigation unit (see page 23-330), and recheck.■

Symptom Troubleshooting (cont'd)

Poor AM or FM radio reception or interference (without navigation)

NOTE:
- Check the vehicle battery condition first.
- Check for aftermarket accessories including cell phones and chargers plugged into the vehicle accessory power sockets.
- Check the connectors for poor connections or loose terminals.
- Check the radio reception in an open area. Compare it to a known-good vehicle whenever possible. Poor reception/interference can be caused by the following:
  - The radio station is far away.
  - Atmospheric conditions are unfavorable.
  - Tall buildings, mountains, or high-voltage power lines are nearby.
  - Aftermarket metallic wi ndow tinting or electronic accessories.

1. Turn the ignition switch to ON (II).

2. Do the seek stop test (see page 23-231).

   Is the test vehicle within 10 % of the known-good vehicle?

   YES—Multipath interference or weak station. Operation is normal.■

   NO—Go to step 3.

3. Check if the radio reception/interference is the same in several locations.

   Is the reception/interference the same?

   YES—Go to step 4.

   NO—Multipath interference or weak station. Operation is normal.■

4. Start the engine.

5. Check the reception/interference.

   Is there noise (static or whine) only with the engine running?

   YES—Check the antenna and radio grounds. If OK, check the charging system and the ignition system.■

   NO—Go to step 6.

6. Turn the ignition switch to LOCK (0).

7. Check the AM/FM antenna mast for cracks or other damage. Verify that the AM/FM antenna mast is not loose.

   NOTE: Do not use any tools to tighten the AM/FM antenna mast.

   Is there any damage?

   YES—Replace the AM/FM antenna mast (see page 23-238).■

   NO—Go to step 8.

8. Disconnect the AM/FM antenna lead 3P connector from the AM/FM antenna.

9. Turn the ignition switch to ON (II) and turn ON the audio unit.

10. Measure the voltage between AM/FM antenna 3P connector terminal No. 3 at the AM/FM antenna and body ground.

AM/FM ANTENNA 3P CONNECTOR

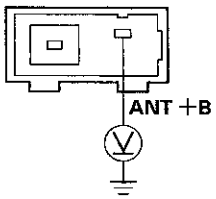

Terminal side of male terminals

Is there battery voltage?

YES—Go to step 11.

NO—Go to step 17.

11. Turn the ignition switch to LOCK (0).

12. Remove the audio unit (see page 23-232).

13. Check for continuity between audio unit connector G (3P) terminal No. 1 and AM/FM antenna 3P connector terminal No. 1.

AUDIO UNIT CONNECTOR G (3P)
Terminal side of female terminals

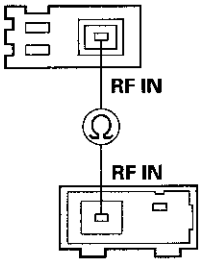

AM/FM ANTENNA 3P CONNECTOR
Terminal side of male terminals

Is there continuity?

YES—Go to step 14.

NO—Replace the AM/FM antenna lead and/or sublead. ■

14. Check for continuity between audio unit connector G (3P) terminal No. 1 and body ground.

AUDIO UNIT CONNECTOR G (3P)

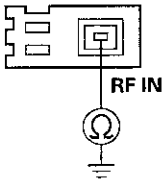

Terminal side of female terminals

Is there continuity?

YES—Replace the AM/FM antenna lead and/or sublead. ■

NO—Go to step 15.

(cont'd)

Symptom Troubleshooting (cont'd)

15. Check for continuity between audio unit connector G (3P) terminal No. 2 and AM/FM antenna 3P connector terminal No. 2.

AUDIO UNIT CONNECTOR G (3P)
Terminal side of female terminals

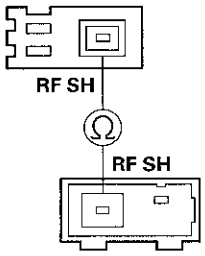

AM/FM ANTENNA 3P CONNECTOR
Terminal side of male terminals

Is there continuity?

YES—Replace the AM/FM antenna lead and/or sublead. ■

NO—Go to step 16.

16. Check for continuity between audio unit connector G (3P) terminals No. 1 and No. 2.

AUDIO UNIT CONNECTOR G (3P)

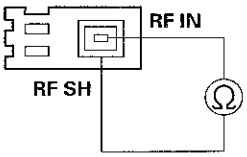

Terminal side of female terminals

Is there continuity?

YES—Replace the AM/FM antenna lead and/or sublead. ■

NO—Replace the AM/FM antenna, and recheck. If the reception is still poor, replace the audio unit (see page 23-232). ■

17. Turn the ignition switch to LOCK (0).

18. Remove the audio unit (see page 23-232).

19. Check for continuity between audio unit connector G (3P) terminal No. 3 and AM/FM antenna 3P connector terminal No. 3.

AUDIO UNIT CONNECTOR G (3P)
Terminal side of female terminals

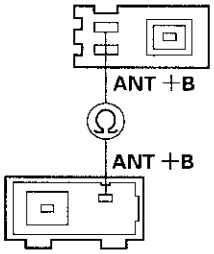

AM/FM ANTENNA 3P CONNECTOR
Terminal side of male terminals

Is there continuity?

YES—Go to step 20.

NO—Repair open in the wire between the audio unit and the AM/FM antenna. ■

20. Check for continuity between the AM/FM antenna 3P connector terminal No. 3 and body ground.

AM/FM ANTENNA 3P CONNECTOR

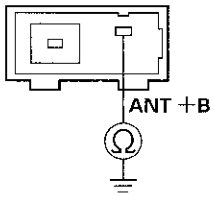

Terminal side of male terminals

Is there continuity?

YES—Repair short in the wire between the audio unit and the AM/FM antenna. ■

NO—Substitute a known-good audio unit (see page 23-232), and recheck. ■

Audio unit power switch will not turn on (No information display and no sound) (with navigation)

NOTE:
- Check the vehicle battery condition first.
- Check the connectors for poor connections or loose terminals.

1. Turn the ignition switch to ON (II).

2. Push the power switch ON to see if the navigation unit turns ON.

   Does the navigation unit display operate properly, and does the audio sound normal?

   YES—Intermittent failure, the system is OK at this time.■

   NO—Go to step 3.

3. Turn the ignition switch to LOCK (0).

4. Check the No. 23 (10 A) fuse in the under-hood fuse/relay box and the No. 35 (7.5 A) fuse in the under-dash fuse/relay box.

   Are the fuses OK?

   YES—Go to step 5.

   NO—Replace the fuse(s), and recheck.■

5. Remove the navigation unit (see page 23-330). Check that the navigation unit is properly connected.

   NOTE:
   - Eject all the discs before removing the navigation unit to prevent damaging the CD player's load mechanism.
   - Remove the PC card before removing the navigation unit.

   Is it connected properly?

   YES—Go to step 6.

   NO—Reconnect the connector, and recheck the function.■

6. Disconnect navigation unit connector A (24P).

7. Turn the ignition switch to ON (II).

8. Measure the voltage between body ground and navigation unit connector A (24P) terminals No. 14 and No. 24 individually.

NAVIGATION UNIT CONNECTOR A (24P)

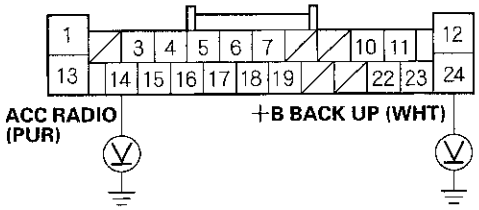

Wire side of female terminals

   Is there battery voltage on both terminals?

   YES—Go to step 9.

   NO—Repair open in the wire(s) between the No. 23 (10 A) fuse in the under-hood fuse/relay box and the No. 35 (7.5 A) fuse in the under-dash fuse/relay box and the navigation.■

9. Turn the ignition switch to LOCK (0).

10. Reconnect navigation unit connector A (24P).

11. Turn the ignition switch to ON (II).

(cont'd)

Symptom Troubleshooting (cont'd)

12. Measure the voltage between navigation unit connector A (24P) terminal No. 12 and body ground.

NAVIGATION UNIT CONNECTOR A (24P)

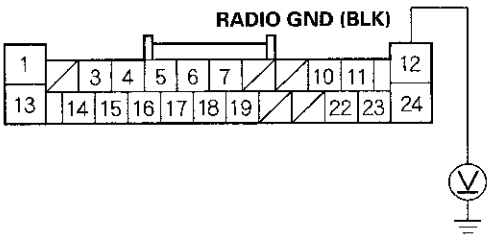

Wire side of female terminals

Is there less than 0.1 V on both terminals?

YES—Replace the navigation unit (see page 23-330). ■

NO—Repair open in the wire between navigation unit connector A (24P) terminal No. 12 and body ground (G505) (see page 22-28). ■

Audio unit power switch will not turn on (No information display and no sound) (without navigation)

NOTE:
- Check the vehicle battery condition first.
- Check the connectors for poor connections or loose terminals.

1. Turn the ignition switch to ON (II).

2. Push the power switch ON to see if audio unit turns ON.

   Does the audio unit operate properly, and does the audio sound normal?

   YES—Intermittent failure, the system is OK at this time. ■

   NO—Go to step 3.

3. Turn the ignition switch to LOCK (0).

4. Check the No. 23 (10 A) fuse in the under-hood fuse/relay box and the No. 35 (7.5 A) fuse in the under-dash fuse/relay box.

   Are the fuses OK?

   YES—Go to step 5.

   NO—Replace the fuse(s), and recheck. ■

5. Remove the audio unit (see page 23-232). Check that the audio unit is properly connected.

   NOTE: Eject all the discs before removing the audio unit to prevent damaging the CD player's load mechanism.

   Is it connected properly?

   YES—Go to step 6.

   NO—Reconnect the connector, and recheck the function. ■

6. Disconnect audio unit connector A (17P).

7. Turn the ignition switch to ON (II).

8. Measure the voltage between audio unit connector A (17P) terminal No. 14 and body ground, and between terminal No. 17 and body ground.

AUDIO UNIT CONNECTOR A (17P)

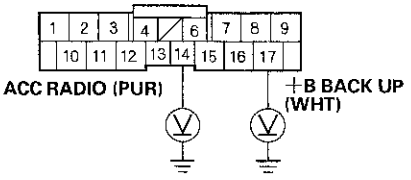

Wire side of female terminals

Is there battery voltage on the both terminals?

YES—Go to step 9.

NO—Repair open in the wire(s) between the No. 23 (10 A) fuse in the under-hood fuse/relay box and the No. 35 (7.5 A) fuse in the under-dash fuse/relay box and the audio unit.■

9. Turn the ignition switch to LOCK (0).

10. Reconnect audio unit connector A (17P).

11. Turn the ignition switch to ON (II).

12. Measure the voltage between audio unit connector A (17P) terminal No. 9 and body ground.

AUDIO UNIT CONNECTOR A (17P)

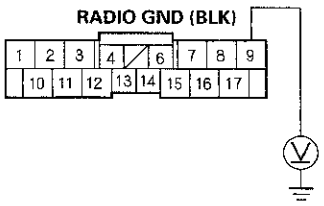

Wire side of female terminals

Is there less than 0.1 V?

YES—Replace the audio unit (see page 23-232).■

NO—Repair open in the wire between audio unit connector A (17P) terminal No. 9 and body ground (G505) (see page 22-28).■

Audio unit power switch will not turn off (with navigation)

NOTE:
- Check for aftermarket accessories plugged into the vehicle's accessory power sockets.
- Check the connectors for poor connections or loose terminals.

1. Turn the ignition switch to ON (II).

2. Push the power switch OFF or turn the ignition switch to LOCK (0) to see if the navigation unit turns OFF.

Is the navigation unit OFF?

YES—Operation is normal.■

NO—Go to step 3.

3. Turn the ignition switch to LOCK (0).

4. Remove the navigation unit (see page 23-330).

5. Disconnect navigation unit connector A (24P).

NOTE:
- Eject all the discs before removing the navigation unit to prevent damaging the CD player's load mechanism.
- Remove the PC card before removing the navigation unit.

6. Turn the ignition switch to ON (II).

7. Measure the voltage between navigation unit connector A (24P) terminal No. 14 and body ground.

NAVIGATION UNIT CONNECTOR A (24P)

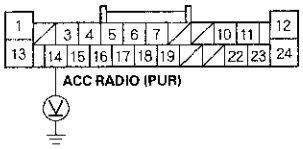

Wire side of female terminals

Is there battery voltage?

YES—Check for short to power on the PUR wire.■

NO—Replace the navigation unit (see page 23-330).■

Symptom Troubleshooting (cont'd)

Audio unit power switch will not turn off (without navigation)

NOTE:
- Check for aftermarket accessories plugged into the vehicle's accessory power sockets.
- Check the connectors for poor connections or loose terminals.

1. Turn the ignition switch to ON (II).
2. Push the power switch OFF or turn the ignition switch to LOCK (0) to see if the audio unit turns OFF.

   Is the audio unit OFF?

   YES—Operation is normal.■

   NO—Go to step 3.
3. Turn the ignition switch to LOCK (0).
4. Remove the audio unit (see page 23-232).
5. Disconnect audio unit connector A (17P).

   NOTE: Eject all the discs before removing the navigation unit to prevent damaging the CD player's load mechanism.
6. Turn the ignition switch to ON (II).
7. Measure the voltage between audio unit connector A (17P) terminal No. 14 and body ground.

AUDIO UNIT CONNECTOR A (17P)

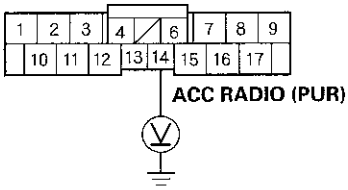

Wire side of female terminals

Is there voltage?

YES—Check for short to power on the PUR wire.■

NO—Replace the audio unit (see page 23-232).■

No sound is heard from the speaker(s) (display is normal) (with navigation)

NOTE:
- Check the vehicle battery condition first.
- Check the connectors for poor connections or loose terminals.
- Set the fader and balance positions to the center.
- Before performing symptom troubleshooting, do the power switch will not turn ON troubleshooting (see page 23-185).

1. Turn the ignition switch to ON (II).
2. Check for sound in each mode (AM, FM, XM, and CD).

   Is the sound OK in each mode?

   YES—Intermittent failure. The system is OK at this time. Check for loose connections at the navigation unit and speaker(s).■

   NO—Go to step 3.
3. Check that the volume button is not set to the min level.

   Is it at the MIN level?

   YES—Raise the volume level, and recheck the function.■

   NO—Go to step 4.
4. On the steering wheel, check the navigation talk command.

   Is the navigation talk command function set?

   YES—Cancel the navigation talk command by pressing the navigation BACK button, then recheck the function.■

   NO—Go to step 5.

5. Check to see if there is a specific speaker that has no sound.

   Do any or all of the speakers fail to sound?

   YES—Speaker(s) failed the test:

   - If at least one speaker is OK, go to step 6.
   - If all speakers fail to sound, go to step 10.

   NO—Speakers all work, but sound quality is poor in step 1.

   - If sound is poor only with XM radio or the XM radio does not function, go to poor or no sound with XM radio (see page 23-225). ■
   - If the sound is poor only with AM or FM, go to poor AM or FM radio reception or interference (see page 23-178). ■
   - If the sound is poor only with disc. ■
     - Try several known- good disc in the navigation unit.
     - If the sound quality is normal, the original disc is faulty.
     - If the sound quality is still poor, replace the navigation unit.
   - If the sound is poor in all modes, go to sound quality diagnosis (see page 23-227). ■

6. Turn the ignition switch to LOCK (0).

7. Check the speaker(s) with no sound for any damage.

   Is there any damage?

   YES—Substitute the speaker (see page 23-235) and recheck. ■

   NO—Go to step 8.

8. Remove the speaker(s) with no sound (see page 23-235), and disconnect its connector.

9. Check the speaker 2P connector for a loose or poor connection.

   Reconnect the speaker 2P connector, and recheck the symptom; does it still fail?

   YES—Go to step 10.

   NO—Operation is normal. ■

10. Make sure the ignition switch is in LOCK (0).

11. Measure the resistance between terminals No. 1 and No. 2 of the speaker connector.

    Is there about 4 Ω ?

    YES—Go to step 12.

    NO—Faulty speaker(s). ■

12. Remove the navigation unit (see page 23-330). Disconnect navigation unit connector A (24P).

    NOTE:
    - Eject all the CDs before removing the navigation unit to prevent damaging the CD player's load mechanism.
    - Remove the PC card before removing the navigation unit.

13. Measure the resistance between following terminals of navigation unit connector A (24P) according to the table.

Speaker	Terminal	Wire color
Driver's door speaker	A23 (+)	LT GRN
	A22 (−)	PNK
Left tweeter	A23 (+)	LT GRN
	A22 (−)	PNK
Front passenger's door speaker	A19 (+)	GRY
	A18 (−)	BRN
Right tweeter	A19 (+)	GRY
	A18 (−)	BRN
Left rear speaker	A11 (+)	YEL
	A10 (−)	BRN
Right rear speaker	A7 (+)	BLU
	A6 (−)	ORN

NAVIGATION UNIT CONNECTOR A (24P)

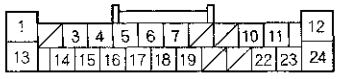

Wire side of female terminals

Is there about 4 Ω ?

YES—Go to step 14.

NO—Repair open or short in the wires between the navigation unit and the speaker. ■

(cont'd)

Symptom Troubleshooting (cont'd)

14. Check for continuity between body ground and the following terminals of navigation unit connector A (24P).

Speaker	Terminal	Wire color
Driver's door speaker	A23 (+)	LT GRN
	A22 (−)	PNK
Left tweeter	A23 (+)	LT GRN
	A22 (−)	PNK
Front passenger's door speaker	A19 (+)	GRY
	A18 (−)	BRN
Right tweeter	A19 (+)	GRY
	A18 (−)	BRN
Left rear speaker	A11 (+)	YEL
	A10 (−)	BRN
Right rear speaker	A7 (+)	BLU
	A6 (−)	ORN

NAVIGATION UNIT CONNECTOR A (24P)

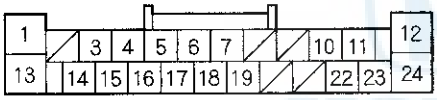

Wire side of female terminals

Is there continuity?

YES—Repair short to body ground in the wire(s) between navigation unit and the speaker(s).■

NO—Substitute a known-good navigation unit (see page 23-330), and recheck. If the symptom/indication goes away, replace the original navigation unit.■

No sound is heard from the speaker(s) (display is normal) (without navigation)

NOTE:
- Check the vehicle battery condition first.
- Check the connectors for poor connections or loose terminals.
- Set the fader and balance positions to the center.
- Before doing symptom troubleshooting, do the audio unit power switch will not turn ON troubleshooting (see page 23-186).

1. Check for sound in each mode (AM, FM, and CD).

   Is the sound OK in each mode?

   YES—Intermittent failure, the system is OK at this time. Check for loose connections at the audio unit and speaker(s).■

   NO—Go to step 2.

2. Check that the volume button is not set to the MIN level.

   Is it at the MIN level?

   YES—Raise the volume level, and recheck the function.■

   NO—Go to step 3.

3. Check to see if there is a specific speaker that has no sound.

   Do any or all of the speakers fail to sound?

   YES—Speaker(s) failed the test:

   - If at least one speaker is OK, go to step 4.
   - If all speakers fail to sound, go to step 8.

   NO—Speakers all work, but sound quality is poor in step 1.

   - If the sound is poor only with AM or FM, go to poor AM or FM radio reception or interference (see page 23-182). ■
   - If the sound is poor only with CD. ■
     - Try several known- good discs in the audio unit.
     - If the sound quality is normal, the original disc is faulty.
     - If the sound quality is still poor, replace the audio unit.
   - If the sound is poor in all modes, go to sound quality diagnosis (see page 23-227). ■

4. Turn the ignition switch to LOCK (0).

5. Check the speaker(s) with no sound for any damage.

   Is there any damage?

   YES—Substitute the speaker (see page 23-235) and recheck. ■

   NO—Go to step 6.

6. Remove the speaker(s) with no sound (see page 23-235), and disconnect its connector.

7. Check the speaker 2P connector for a loose or poor connection.

   Reconnect the speaker 2P connector, and recheck the symptom; does it still fail?

   YES—Go to step 8.

   NO—Operation is normal. ■

8. Make sure the ignition switch is in LOCK (0).

9. Measure the resistance between terminals No. 1 and No. 2 of the speaker connector.

   Is there about 4 Ω ?

   YES—Go to step 10.

   NO—Faulty speaker(s). ■

10. Remove the audio unit (see page 23-232). Disconnect audio unit connector A (17P).

    NOTE: Eject all the discs before removing the audio unit to prevent damaging the CD player's load mechanism.

(cont'd)

Symptom Troubleshooting (cont'd)

11. Measure the resistance between the following terminals of audio unit connector A (17P) according to the table.

Speaker	Terminal	Wire color
Driver's door speaker	A12 (+)	LT GRN
	A3 (−)	PNK
Left tweeter	A12 (+)	LT GRN
	A3 (−)	PNK
Front passenger's door speaker	A15 (+)	GRY
	A7 (−)	BRN
Right tweeter	A15 (+)	GRY
	A7 (−)	BRN
Left rear speaker	A11 (+)	YEL
	A2 (−)	BRN
Right rear speaker	A16 (+)	BLU
	A8 (−)	ORN

AUDIO UNIT CONNECTOR A (17P)

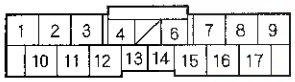

Wire side of female terminals

Is there about 4 Ω ?

YES—Go to step 12.

NO—Repair open or short in the wires between the audio unit and the speaker.■

12. Check for continuity between body ground and the following terminals of audio unit connector A (17P).

Speaker	Terminal	Wire color
Driver's door speaker	A12 (+)	LT GRN
	A3 (−)	PNK
Left tweeter	A12 (+)	LT GRN
	A3 (−)	PNK
Front passenger's door speaker	A15 (+)	GRY
	A7 (−)	BRN
Right tweeter	A15 (+)	GRY
	A7 (−)	BRN
Left rear speaker	A11 (+)	YEL
	A2 (−)	BRN
Right rear speaker	A16 (+)	BLU
	A8 (−)	ORN

AUDIO UNIT CONNECTOR A (17P)

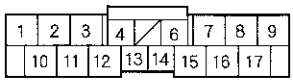

Wire side of female terminals

Is there continuity?

YES—Repair short to body ground in the wire(s) between the audio unit and the speaker.■

NO—Substitute a known-good audio unit (see page 23-232) and recheck. If the symptom/indication goes away, replace the original audio unit.■

Auxiliary input sound is low or cannot be heard

NOTE:
- Check the vehicle battery condition first.
- Check the connectors for poor connections or loose terminals.
- Use auxiliary stereo cables with 3.5 mm ends only.
- Auxiliary accessories may be played on the audio unit using the auxiliary input.

1. Turn the ignition switch to ON (II).

2. Turn on the audio unit or navigation unit and connect an auxiliary accessory to the auxiliary input jack.

3. Check the volume operation.

   Is the sound normal?

   YES—Operation is normal at this time. ■

   NO—Go to step 4.

4. Make sure the auxiliary accessory volume is set to high.

   Is the volume set to high?

   YES—Go to step 5.

   NO—Raise the auxiliary accessory volume is set to high. Make sure the audio unit volume is turned down before retesting. ■

5. Substitute a known-good auxiliary audio accessory and/or auxiliary stereo cable, and recheck.

   Does the auxiliary audio accessory operate properly?

   YES—Original auxiliary audio accessory or auxiliary stereo cable is faulty. ■

   NO—Go to step 6.

6. Turn the ignition switch to LOCK (0).

7. Remove the auxiliary jack assembly (see page 23-236), and check that the auxiliary jack assembly is properly connected.

   Is the auxiliary jack assembly connected properly?

   YES—
   - With navigation: go to step 8.
   - Without navigation: go to step 13.

   NO—Reconnect the connector, and recheck the function. ■

8. Disconnect auxiliary jack assembly 5P connector.

9. Disconnect navigation unit connector B (24P).

10. Check for continuity between body ground and navigation unit connector B (24P) according to the table.

Navigation unit connector	Wire color
B1	BRN
B3	BLU
B13	YEL
B14	GRN
B15	WHT

NAVIGATION UNIT CONNECTOR B (24P)

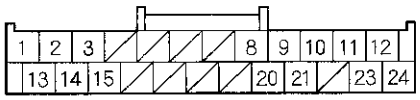

Wire side of female terminals

Is there continuity?

YES—Short to body ground in the wire(s) between the navigation unit and the auxiliary jack assembly. Replace the affected shielded harness. ■

NO—Go to step 11.

(cont'd)

Symptom Troubleshooting (cont'd)

11. Check for continuity between navigation unit connector B (24P) according to the table.

From terminal	To terminals
B1	B2*, B3, B13, B14, B15
B2*	B3, B13, B14, B15
B3	B13, B14, B15
B13	B14, B15
B14	B15

*: Shielded wire

NAVIGATION UNIT CONNECTOR B (24P)

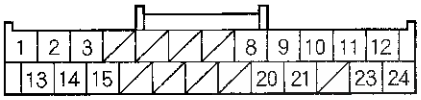

Wire side of female terminals

Is there continuity?

YES—Short in the wire(s) between the navigation unit and the auxiliary jack assembly. Replace the affected shielded harness.■

NO—Go to step 12.

12. Check for continuity between navigation unit connector B (24P) and the auxiliary jack assembly 5P connector according to the table.

Navigation unit connector	Auxiliary jack assembly connector	Wire color
B1	3	BRN
B3	2	BLU
B13	4	YEL
B14	5	GRN
B15	1	WHT

NAVIGATION UNIT CONNECTOR B (24P)

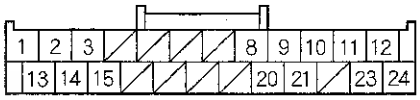

Wire side of female terminals

AUXILIARY JACK ASSEMBLY 5P CONNECTOR

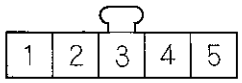

Wire side of female terminals

Is there continuity?

YES—Substitute a known-good auxiliary jack assembly (see page 23-236), and recheck. If the symptom/indication goes away, replace the original auxiliary jack assembly. If the symptom/indication is still present, replace the navigation unit (see page 23-330).■

NO—Open in the wire(s) between the navigation unit and the auxiliary jack assembly. Replace the affected shielded harness.■

13. Disconnect auxiliary jack assembly 5P connector.

14. Disconnect audio unit connector B (20P).

15. Check for continuity between body ground and audio unit connector B (20P) according to the table.

Audio unit connector	Wire color
B3	BRN
B5	BLU
B13	YEL
B14	GRN
B15	WHT

AUDIO UNIT CONNECTOR B (20P)

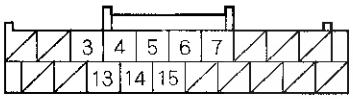

Wire side of female terminals

Is there continuity?

YES—Short to body ground in the wire(s) between the audio unit and the auxiliary jack assembly. Replace the affected shielded harness.■

NO—Go to step 16.

16. Check for continuity between audio unit connector B (20P) according to the table.

From terminal	To terminals
B3	B4*, B5, B13, B14, B15
B4*	B5, B13, B14, B15
B5	B13, B14, B15
B13	B14, B15
B14	B15

*: Shielded wire

AUDIO UNIT CONNECTOR B (20P)

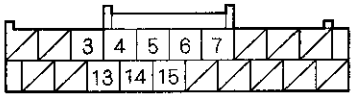

Wire side of female terminals

Is there continuity?

YES—Short in the wire(s) between the audio unit and the auxiliary jack assembly. Replace the affected shielded harness.■

NO—Go to step 17.

(cont'd)

Symptom Troubleshooting (cont'd)

17. Check for continuity between audio unit connector B (20P) and auxiliary jack assembly 5P connector according to the table.

Audio unit connector	Auxiliary jack assembly connector	Wire color
B3	3	BRN
B5	2	BLU
B13	4	YEL
B14	5	GRN
B15	1	WHT

AUDIO UNIT CONNECTOR B (20P)

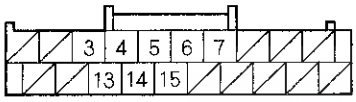

Wire side of female terminals

AUXILIARY JACK ASSEMBLY 5P CONNECTOR

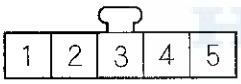

Wire side of female terminals

Is there continuity?

YES—Substitute a known-good auxiliary jack assembly (see page 23-236), and recheck. If the symptom/indication goes away, replace the original auxiliary jack assembly. If the symptom/indication is still present, replace the audio unit (see page 23-232).■

NO—Open in the wire(s) between the audio unit and the auxiliary jack assembly. Replace the affected shielded harness.■

Audio system sound is weak or distorted (display is normal)

NOTE:
- Check the vehicle battery condition first.
- Check the connectors for poor connections or loose terminals.

1. Check for sound in each mode (AM, FM, XM, and CD).

   Is there sound from the speakers, and is the sound quality normal in each mode?

   YES—Intermittent failure. The system is OK at this time. Check for loose connections at the navigation unit, audio unit, amplifier, and each speaker.■

   NO—Speakers all work, sound quality is poor.■

   - If the sound quality is poor only with the XM radio, or the XM radio does not function, go to poor or no sound with XM radio (see page 23-225).
   - If the sound quality is poor only with AM or FM radio, go to poor AM or FM radio reception or interference (see page 23-178).
   - If sound is poor in all modes, go to sound quality diagnosis (see page 23-227).

Radio preset memory is lost

NOTE: If only the XM stations are lost, go to XM radio preset memory is lost (see page 23-224).

1. Set each of the radio station preset buttons.

   Do each of the buttons set properly?

   YES—Go to step 2.

   NO—
   - With navigation: Replace the navigation unit (see page 23-330).■
   - Without navigation: Replace the audio unit (see page 23-232).■

2. Turn the ignition switch to LOCK (0) for 1 minute, then turn it back to ON (II).

3. Test the preset buttons for proper recall operation.

   Do the preset buttons recall the set radio stations?

   YES—System is normal at this time. Check the connections at the navigation unit or the audio unit.■

   NO—
   - With navigation: Replace the navigation unit (see page 23-330).■
   - Without navigation: Replace the audio unit (see page 23-232).■

Volume does not change

NOTE:
- Check the vehicle battery condition first.
- Check the connectors for poor connections or loose terminals.
- Set the fader and balance positions to the center.

1. Listen for sound from the speakers.

   Is the sound normal?

   YES—Go to step 2.

   NO—Go to audio system sound is weak or distorted (see page 23-196), or no sound is heard from speaker(s):■

   - With navigation (see page 23-188)
   - Without navigation (see page 23-190)

2. Operate the volume knob to see if the volume changes.

   Does the volume change?

   YES—Operation is normal.■

   NO—
   - With navigation: Replace the navigation unit (see page 23-330).■
   - Without navigation: Replace the audio unit (see page 23-232).■

Symptom Troubleshooting (cont'd)

Volume does not increase with speed (with navigation)

NOTE:
- Check the vehicle battery condition first.
- Check the connectors for poor connections or loose terminals.

1. Test-drive the vehicle at highway speeds, and monitor if the volume increases.

   Do the volume increase?

   YES—Intermittent failure, the system is OK at this time.■

   NO—Go to step 2.

2. Verify the SVC mode setting in the navigation unit sound set-up.

   Is the SVC set to off?

   YES—Change the setting to Mid, and retest (see page 23-152).■

   NO—Go to step 3.

3. Do the self-diagnostic function for the vehicle speed pulse indication (see page 23-173).

   Does the self-diagnostic function indicate a VSP signal?

   YES—Substitute a known-good navigation unit (see page 23-330), and retest. If the symptom/indication goes away, replace the original navigation unit.■

   NO—Go to step 4.

4. Remove the navigation unit (see page 23-330) and disconnect navigation unit connector A (24P).

   NOTE:
   - Eject all the discs before removing the navigation unit to prevent damaging the CD player's load mechanism.
   - Remove the PC card before removing the navigation unit.

5. Drive the vehicle, and have an assistant measure the voltage at navigation unit connector A (24P) terminal No. 15.

NAVIGATION UNIT CONNECTOR A (24P)

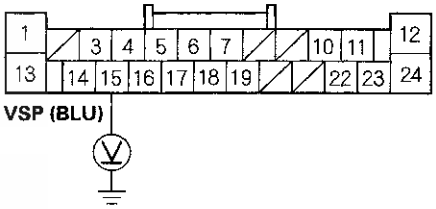

Wire side of female terminals

Is there a 0—5 V Pulse?

YES—Replace the navigation unit (see page 23-330).■

NO—Repair open or shorts in the wire between the navigation unit connector A (24P) terminal No. 15 and the PCM connector A (44P) terminal No. 29. If no opens or shorts are found, update the PCM (see page 11-236) if it does not have the latest software or substitute a known-good PCM (see page 11-238).■

Volume does not increase with speed (without navigation)

NOTE:
- Check the vehicle battery condition first.
- Check the connectors for poor connections or loose terminals.

1. Test-drive the vehicle at highway speeds, and monitor if the volume increases.

   Do the volume increase?

   YES—Intermittent failure, the system is OK at this time. ■

   NO—Go to step 2.

2. Verify the SVC mode setting in the audio unit sound set-up.

   Is the SVC set to off?

   YES—Change the setting to Mid, and retest (see page 23-152). ■

   NO—Go to step 3.

3. Do the self-diagnostic function for the vehicle speed pulse indication (see page 23-173).

   Does the self-diagnostic function indicate a VSP signal?

   YES—Substitute a known-good audio unit (see page 23-232), and retest. If the symptom/indication goes away, replace the original audio unit. ■

   NO—Go to step 4.

4. Remove the audio unit (see page 23-232) and disconnect audio unit connector A (17P).

   NOTE: Eject all the discs before removing the audio unit to prevent damaging the CD player's load mechanism.

5. Drive the vehicle, and have an assistant measure the voltage at audio unit connector A (17P) terminal No. 13.

AUDIO UNIT CONNECTOR A (17P)

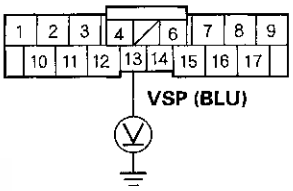

Wire side of female terminals

Is there a 0—5 V Pulse?

YES—Replace the audio unit (see page 23-232). ■

NO—Repair open or shorts in the wire between the audio unit connector A (17P) terminal No. 13 and the PCM connector A (44P) terminal No. 29. If no opens or shorts are found, update the PCM (see page 11-236) if it does not have the latest software or substitute a known-good PCM (see page 11-238). ■

Symptom Troubleshooting (cont'd)

Volume is too high or too low when driving at freeway speeds

NOTE:
- Check the vehicle battery condition first.
- Check the connectors for poor connections or loose terminals.

1. Test-drive the vehicle at highway speeds and monitor volume level.

   Is the volume level too high, or too low?

   YES—Go to step 2.

   NO—Intermittent failure, the system is OK at this time. ■

2. Change the SVC mode setting in sound set-up to Mid (see page 23-152).

   Is the volume level still too high, or too low?

   YES—
   - With navigation: Replace the navigation unit (see page 23-330). ■
   - Without navigation: Replace the audio unit (see page 23-232). ■

   NO—Improper SVC setting for customers sound taste. ■

Radio tuner does not change stations

1. Check the audio information on the display panel.

   Does the audio information display properly?

   YES—Go to step 2.

   NO—Go to power switch will not turn on: ■

   - With navigation (see page 23-185)
   - Without navigation (see page 23-186)

2. Operate the tuning knob to see if the radio station changes.

   Does the radio station change?

   YES—Intermittent failure, the tuning knob is OK at this time. ■

   NO—
   - With navigation: Replace the navigation unit (see page 23-330). ■
   - Without navigation: Replace the audio unit (see page 23-232). ■

Navigation unit button illumination does not work (with navigation)

NOTE:
- Check the vehicle battery condition first.
- Check the connectors for poor connections or loose terminals.

1. Turn the ignition switch to ON (II).

2. Turn the combination lighting switch to the parking light position.

3. Check the illumination of the navigation unit buttons.

   Are the buttons illuminated?

   YES—Intermittent problem, the navigation unit is OK at this time. Check for loose or poor connections at navigation unit connector A (24P). ■

   NO—Go to step 4.

4. Check the illumination of several other buttons not related to the navigation system.

   Are the buttons illuminated?

   YES—Go to step 5.

   NO—Troubleshoot the interior lights. Start by checking the No. 14 (7.5 A) fuse in the under-dash fuse/relay box. If the fuse is OK, check for an open in the wire between the under-dash fuse/relay box and the navigation unit. ■

5. Turn the ignition switch to LOCK (0).

6. Disconnect navigation unit connector A (24P).

   NOTE:
   - Eject all the discs before removing the navigation unit to prevent damaging the CD player's load mechanism.
   - Remove the PC card before removing the navigation unit.

7. Disconnect gauge control module (tach) 36P connector.

8. Check for continuity between navigation unit connector A (24P) terminal No. 1 and gauge control module (tach) 36P connector terminal No. 14.

NAVIGATION UNIT CONNECTOR A (24P)
Wire side of female terminals

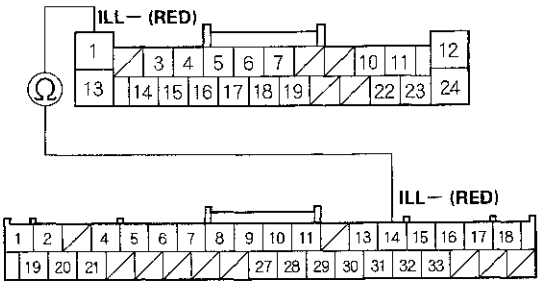

GAUGE CONTROL MODULE (TACH) 36P CONNECTOR
Wire side of female terminals

   Is there continuity?

   YES—Go to step 9.

   NO—Repair open in the wire between the gauge control module and the navigation unit. ■

9. Turn the ignition switch to ON (II).

10. With the headlight switch still on, measure the voltage between navigation unit connector A (24P) terminal No. 13 and body ground.

NAVIGATION UNIT CONNECTOR A (24P)

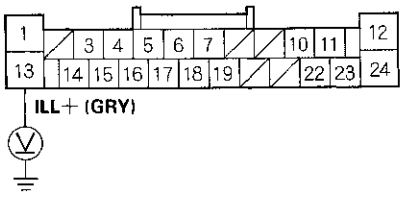

Wire side of female terminals

   Is there battery voltage?

   YES—Check the connections at navigation unit connector A (24P). If all connections are OK, replace the navigation unit (see page 23-330). ■

   NO—Repair open in the wire between the under-dash fuse/relay box and the navigation unit. ■

Symptom Troubleshooting (cont'd)

Audio unit button illumination does not work (without navigation)

NOTE:
- Check the vehicle battery condition first.
- Check the connectors for poor connections or loose terminals.

1. Turn the ignition switch to ON (II).

2. Turn the combination lighting switch to the parking light position.

3. Check the illumination of the audio unit buttons.

   Are the buttons illuminated?

   YES—Intermittent problem, the audio unit is OK at this time. Check for loose or poor connections at the audio unit connector A (17P). ■

   NO—Go to step 4.

4. Check the illumination of several other buttons not related to the audio system.

   Are the buttons illuminated?

   YES—Go to step 5.

   NO—Troubleshoot the interior lights. Start by checking the No. 14 (7.5 A) fuse in the under-dash fuse/relay box. If the fuse is OK, check for an open in the wire between the under-dash fuse/relay box and the audio unit. ■

5. Turn the ignition switch to LOCK (0).

6. Disconnect audio unit connector A (17P).

   NOTE: Eject all the discs before removing the audio unit to prevent damaging the CD player's load mechanism.

7. Disconnect gauge control module (tach) 36P connector.

8. Check for continuity between audio unit connector A (17P) terminal No. 1 and gauge control module (tach) 36P connector terminal No. 14.

AUDIO UNIT CONNECTOR A (17P)
Wire side of female terminals

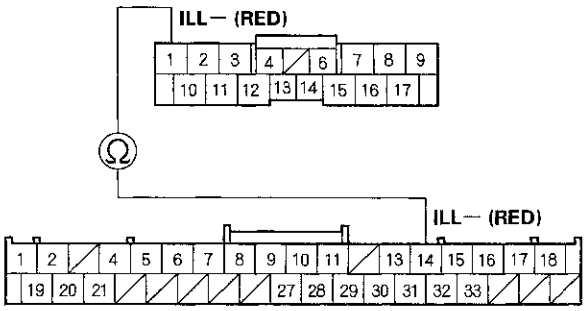

GAUGE CONTROL MODULE (TACH) 36P CONNECTOR
Wire side of female terminals

Is there continuity?

YES—Go to step 9.

NO—Repair open in the wire between the gauge control module and the audio unit. ■

9. Turn the ignition switch to ON (II).

10. With the headlight switch still on, measure the voltage between audio unit connector A (17P) terminal No. 10 and body ground.

AUDIO UNIT CONNECTOR A (17P)

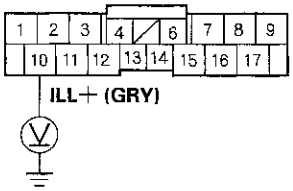

Wire side of female terminals

Is there battery voltage?

YES—Check the connections at audio unit connector A (17P). If all the connections are OK, replace the audio unit (see page 23-332). ■

NO—Repair open in the wire between the under-dash fuse/relay box and the audio unit. ■

Display does not dim or brighten with dimmer (without navigation)

NOTE:
- Check the vehicle battery condition first.
- Check the connectors for poor connections or loose terminals.
- If the vehicle is equipped with navigation, refer to the Display day/night mode does not work (see page 23-323).

1. Turn the ignition switch to ON (II).

2. Turn the combination light switch ON and OFF to see if the symptom can be duplicated.

   Is the symptom duplicated?

   YES—Go to step 3.

   NO—Operation is normal.

3. Turn the combination light switch to OFF.

4. Rotate the illumination control dial.

   Is it normal?

   YES—Operation is normal.

   NO—Go to step 5.

5. Disconnect, and check audio unit connector A (17P) for a loose or a poor connection.■

   NOTE: Eject all the discs before removing the audio unit to prevent damaging the CD player's load mechanism.

   Reconnect audio unit connector A (17P) and recheck the symptom; does it still appear?

   YES—Go to step 6.

   NO—Operation is normal.■

6. Turn the ignition switch to LOCK (0).

7. Remove the audio unit (see page 23-332).

8. Turn the ignition switch to ON (II).

9. Measure the voltage between audio unit connector A (17P) terminals No. 1 and No. 10. Rotate the dash brightness controller buttons to see if the voltage changes.

AUDIO UNIT CONNECTOR A (17P)

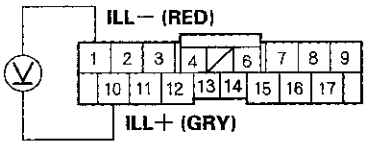

Wire side of female terminals

Does the voltage change?

YES—Substitute a known-good audio unit (see page 23-232), and recheck. If the symptom/indication goes away, replace the original audio unit. If symptom is still present, substitute a known-good center panel display and recheck. If the symptom/indication goes away, replace the original center panel display (see page 23-232).■

NO—Repair open in the wire between the under-dash fuse/relay box and the gauge control module.■

Symptom Troubleshooting (cont'd)

Audio disc does not load

NOTE:
- Check the vehicle battery condition first.
- Check the connectors for poor connections or loose terminals.
- Disc labels should not be used in the navigation unit or audio unit. They may damage the player mechanism.
- Make sure the disc is compatible with the system (see the owner's manual for more information).

1. Insert a known-good disc to see if the symptom can be duplicated.

   Does the disc load?

   YES—Operation is normal. If the disc loads normally, but will not play, go to audio disc does not play (see page 23-205).■

   NO—Go to step 2.

2. Insert another disc.

   Does the disc load?

   YES—The original disc is faulty.■

   NO—
   - With navigation: Replace the navigation unit (see page 23-330).■
   - Without navigation: Replace the audio unit (see page 23-232).■

Audio disc does not eject

NOTE:
- Check the vehicle battery condition first.
- Check the connectors for poor connections or loose terminals.
- Disc labels should not be used in the navigation unit or audio unit. They may damage the player mechanism.

1. Turn on the audio system.

   Does the system turn on?

   YES—Go to step 2.

   NO—Go to power switch will not turn on:

   - With navigation (see page 23-185).■
   - Without navigation (see page 23-186).■

2. Check to see if the disc ejects correctly with no binding by pushing the EJECT button.

   Does the disc eject normally?

   YES—Operation is normal.■

   NO—
   - With navigation: Replace the navigation unit (see page 23-330).■
   - Without navigation: Replace the audio unit (see page 23-232).■

Special Tools Required
Diagnostics CD 07AAZ-SDBA100

Audio disc does not play

NOTE:
- Check the vehicle battery condition first.
- Check the connectors for poor connections or loose terminals.

1. Try loading a known-good disc.

   Does the disc load?

   YES—Go to step 2.

   NO—Go to audio disc does not load (see page 23-204).■

2. Insert the audio diagnostic CD (T/N: 07AAZ-SDBA100) in the navigation unit or audio unit.

   Does the disc play?

   YES—The original disc is faulty, or has an unreadable format.■

   NO—
   - With navigation: Replace the navigation unit (see page 23-330).■
   - Without navigation: Replace the audio unit (see page 23-232).■

Special Tools Required
- Diagnostics CD 07AAZ-SDBA100
- Skip test CD 07AAZ-SDBA200
- Skip test CD 07AAZ-SDBA300

Audio disc skips

1. Confirm the vehicles tires are properly inflated.

2. Check the customers CD for scratches, fingerprints, and marks.

   NOTE: Do the following test with audio unit bass and treble set to customers listening performance. When comparing to known-good vehicles, comparison should be performed on same model and trim level.

3. Test drive to identify when the CD skips. The audio diagnostic CD (T/N: 07AAZ-SDBA100) can be used if customers CD is not available. Use tracks 10 to 12.

   Does the CD skip?

   YES—Go to step 4.

   NO—Operation is normal.■

4. Compare the customers CD that skips in a known-good vehicle under the same conditions.

   Does the CD skip in the known-good vehicle under the same conditions?

   YES—Operation is normal.■

   NO—Go to step 5.

   NOTE: Do the following test with vehicle parked and engine running.

(cont'd)

Symptom Troubleshooting (cont'd)

5. Insert the diagnostic skip test CD (T/N: 07AAZ-SDBA300) (ABEX TCD 721). Play tracks 2 to 11 and note the track number(s) where the CD starts skipping. Do the same test on a known-good vehicle.

   Does the CD skip on the same track number(s) as the known-good vehicle?

   YES—Operation is normal. ■

   NO—Go to step 6.

6. Insert the diagnostic skip test CD (T/N: 07AAZ-SDBA200) (ABEX TCD 725B) play tracks 7 to 11 and tracks 13 to 15 and note the track number(s) where the CD starts skipping. Perform the same test on a known-good vehicle.

   Does the CD skip on same track number(s) as the known-good vehicle?

   YES—Operation is normal. ■

   NO—
   - With navigation: Replace the navigation unit (see page 23-330). ■
   - Without navigation: Replace the audio unit (see page 23-232). ■

Audio remote switch does not work properly (with navigation)

NOTE:
- Check the vehicle battery condition first.
- Check the connectors for poor connections or loose terminals.

1. Check the audio unit operation.

   Is the audio unit operation OK?

   YES—Go to step 2.

   NO—Replace the navigation unit (see page 23-330). ■

2. Test the audio remote switch (see page 23-237).

   Is the audio remote switch OK?

   YES—Go to step 3.

   NO—Replace the audio remote switch (see page 23-238). ■

3. Remove the navigation unit (see page 23-330).

4. Measure the resistance between navigation unit connector A (24P) terminals No. 5 and No. 16 as specified in the table.

NAVIGATION UNIT CONNECTOR A (24P)

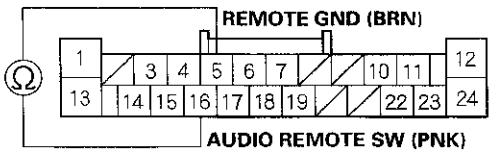

Wire side of female terminals

AUDIO REMOTE SWITCH TABLE

Button held down	VOL DOWN	VOL UP	CH (−)	CH (+)	MODE	No button pressed
Resistance	about 100 Ω	about 357 Ω	about 775 Ω	about 1.7 kΩ	about 3.7 kΩ	about 10 kΩ

Is the resistance OK?

YES—Go to step 5.

NO—Repair open or high resistance in the circuit between the navigation unit and the audio remote switch. If the wires are OK, replace the cable reel (see page 24-196). ■

5. Check for continuity between navigation unit connector A (24P) terminals the No. 5 and No. 16 and body ground individually.

NAVIGATION UNIT CONNECTOR A (24P)

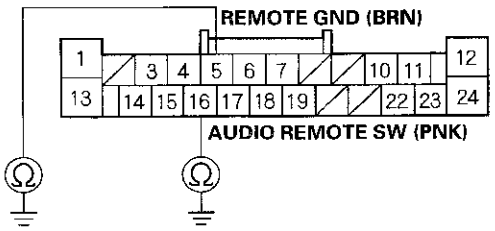

Wire side of female terminals

Is there continuity?

YES—Repair short to body ground in the circuit between the navigation unit and the audio remote switch. If the wires are OK, replace the cable reel (see page 24-196). ■

NO—Replace the navigation unit (see page 23-330). ■

Symptom Troubleshooting (cont'd)

Audio remote switch does not work properly (without navigation)

NOTE:
- Check the vehicle battery condition first.
- Check the connectors for poor connections or loose terminals.

1. Check the audio unit operation.

   Is the audio unit operation OK?

   YES—Go to step 2.

   NO—Replace the audio unit (see page 23-232). ■

2. Test the audio remote switch (see page 23-237).

   Is the audio remote switch OK?

   YES—Go to step 3.

   NO—Replace the audio remote switch (see page 23-238). ■

3. Remove the audio unit (see page 23-232).

4. Measure the resistance between audio unit connector B (20P) terminals No. 6 and No. 7 as specified in the table.

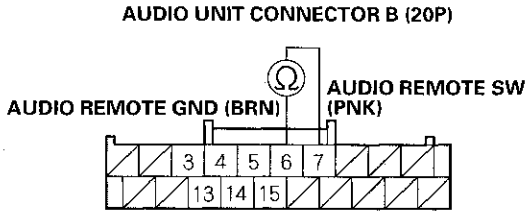

Wire side of female terminals

AUDIO REMOTE SWITCH TABLE

Button held down	VOL DOWN	VOL UP	CH (−)	CH (+)	MODE	No button pressed
Resistance	about 100 Ω	about 357 Ω	about 775 Ω	about 1.7 kΩ	about 3.7 kΩ	about 10 kΩ

Is the resistance OK?

YES—Go to step 5.

NO—Repair open or high resistance in the circuit between the audio unit and the audio remote switch. If the wires are OK, replace the cable reel (see page 24-196). ■

5. Check for continuity between audio unit connector B (20P) terminals the No. 6 and No. 7 and body ground individually.

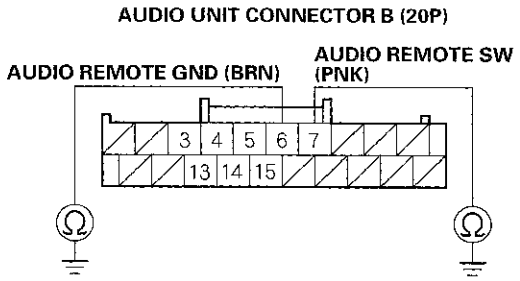

Wire side of female terminals

Is there continuity?

YES—Repair short to body ground in the circuit between audio unit and the audio remote switch. If the wires are OK, replace the cable reel (see page 24-196).■

NO—Replace the audio unit (see page 23-232).■

Audio disc cannot be inserted and/or ejected (with navigation)

NOTE:
- Check the vehicle battery condition first.
- Check the connectors for poor connections or loose terminals.
- Disc labels should not be used in the navigation unit or audio unit. They may damage the player mechanism.
- Make sure the disc is compatible with the system (see the owner's manual for more information).

1. Press the OPEN/CLOSE button to open the navigation display.

2. Try inserting an audio CD.

   Does the player accept the CD?

   YES—The system is OK at this time.■

   NO—Go to step 3.

3. Press the CD eject button.

   Does the player eject the CD?

   YES—The system is OK at this time.■

   NO—Replace the navigation unit (see page 23-330).■

Audio System ('09 models)

Symptom Troubleshooting (cont'd)

PC card will not play/card icon on audio screen cannot be selected (with navigation)

Unfortunately there are no error messages, and no diagnostics for the PC card. There are many reasons why a card won't play audio files in the audio unit.

- The card may not be fully inserted into the slot. Eject the card, and inspect for warping or damage to the edge connector. Never use excessive force to insert a card. This can result in damage to the pins in the rear of the slot.
- The customer's card may contain audio files that are not recognized by the system. Only MP3, and WMA music files are played.
- The flash card type may not be accepted by the system. Only Compact Flash and ATA cards have been tested.
- The card's PCMCIA adaptor may be preventing a known-good card from playing. New PCMCIA adaptors are constantly being released, and have not been tested.
- The card's capacity may exceed 1 GB. Only cards with capacities of up to 1 GB (1000 MB) have been tested.
- There may not be any files on the card. Some cards have write protection, make sure it is turned off before putting files on the card.
- Although flash memory chips are reliable, occasionally they develop bad sectors or other formatting errors that prevents them from playing. The customer should re-format the card using the FAT, or FAT32 format.
- The card may have been damaged by heat. Suggest that the customer remove their card when exiting the vehicle.
- The customer may have formatted the card using the format NTFS. Only the formats FAT, and FAT32 are accepted by the system.
- Hard Disc Drive (HDD) cards may not work properly in the system and can overheat and quit functioning, particularly in a hot vehicle. They are not recommended.
- The filing structure of the card may exceed the specification of 8 folder levels deep, 99 folders maximum, and 999 total tracks maximum. If any of these limitations is exceeded, the system may not properly display or play the tracks.

NOTE: A delay when first inserting a card is normal. The system is reading the File Tag information for album names, artist, and song titles and there is no hour glass, The delay length depends on the number of tracks, and the complexity of the folder structure.
See the audio section glossary for an explanation of the terms used above.

USB input sound is low or cannot be heard (with navigation)

NOTE:
- Check the vehicle battery condition first.
- Check the connectors for poor connections or loose terminals.

1. Turn the ignition switch to ON (II).

2. Do the speaker check mode with the self-diagnostic mode.

   Do all speakers make a sound?

   YES—Go to step 3.
   NO—Go to no sound is heard from speaker(s). ■

3. Turn the ignition switch to LOCK (0).

4. Connect the customer's USB device to a known-good vehicle that equipped with the USB adapter and check the USB device operation.

   Is the USB device working properly?

   YES—Go to step 5.
   NO—USB device is faulty. Also check the USB cable and USB adapter connector condition. ■

5. On the customer's vehicle, connect the customer's USB device to the USB adapter.

6. Turn the ignition switch to ON (II) and turn on the navigation unit.

7. Check if the USB device can be operated with the navigation unit (Folders or Files UP/DOWN, etc.).

   Can you operate the USB device, but there is no sound heard?

   YES—Go to step 8.
   NO—If the sound is normal, the USB device is OK at this time. If the USB device cannot be operated, go to USB audio device does not work. ■

8. Turn the ignition switch to LOCK (0).

9. Disconnect navigation unit connector E (14P).

10. Disconnect USB adapter unit connector A (14P).

11. Disconnect XM receiver connector A (14P).

12. Check for continuity between the terminals of navigation unit connector E (14P) and body ground according to the table.

Navigation unit connector	Wire color
E5	WHT
E6	RED
E13	BLK
E14	GRN

NAVIGATION UNIT CONNECTOR E (14P)

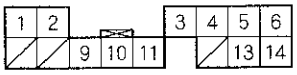

Wire side of female terminals

Is there continuity?
YES—Short to body ground in the wire(s) between the navigation unit and the USB adapter unit. Replace the affected shielded harness. ■
NO—Go to step 13.

13. Check for continuity between the terminals of navigation unit connector E (14P) according to the table.

From terminal	To terminals
E4 (GRY)	E5 (WHT), E6 (RED), E13 (BLK), E14 (GRN)
E5 (WHT)	E6 (RED), E13 (BLK), E14 (GRN)
E6 (RED)	E13 (BLK), E14 (GRN)
E13 (BLK)	E14 (GRN)

NAVIGATION UNIT CONNECTOR E (14P)

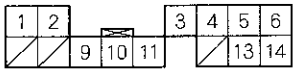

Wire side of female terminals

Is there continuity between any of the terminals?
YES—Short in the wires between the navigation unit and the USB adapter unit. Replace the affected shielded harness. ■
NO—Go to step 14.

(cont'd)

Symptom Troubleshooting (cont'd)

14. Check for continuity between navigation unit connector E (14P) and USB adapter unit connector A (14P) according to the table.

Navigation unit connector	USB adapter unit connector	Wire color
E5	A5	WHT
E6	A6	RED
E13	A13	BLK
E14	A14	GRN

NAVIGATION UNIT CONNECTOR E (14P)

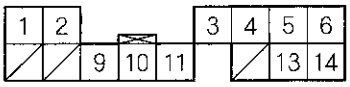

Wire side of female terminals

USB ADAPTER UNIT CONNECTOR A (14P)

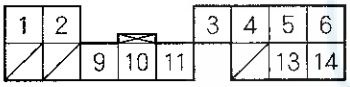

Wire side of female terminals

Is there continuity?

YES—Substitute a known-good USB adapter unit (see page 23-234), then reconnect all of the connectors and recheck. If the symptom/indication goes away, replace the original USB adapter unit. If the symptom/indication is still present, replace the navigation unit (see page 23-330).■

NO—Open in the wire(s) between the navigation unit and the USB adapter unit. Replace affected shielded harness.■

USB input sound is low or cannot be heard (without navigation)

NOTE:
- Check the vehicle battery condition first.
- Check the connectors for poor connections or loose terminals.

1. Turn the ignition switch to ON (II).

2. Do the speaker check mode with the self-diagnostic mode.

   Do all speakers make a sound?

   YES—Go to step 3.
   NO—Go to no sound is heard from speaker(s).■

3. Turn the ignition switch to LOCK (0).

4. Connect the customer's USB device to a known-good vehicle that equipped with the USB adapter, and check the USB device operation.

   Is the USB device working properly?

   YES—Go to step 5.
   NO—USB device is faulty. Also check the USB cable and USB adapter connector condition.■

5. On the customer's vehicle, connect the customer's USB device to the USB adapter.

6. Turn the ignition switch to ON (II), and turn on the audio unit.

7. Check if the USB device can be operated with the audio unit (Folders or Files UP/DOWN, etc.).

   Can you operate the USB device, but there is no sound heard?

   YES—Go to step 8.
   NO—If the sound is normal, the USB device is OK at this time. If the USB device cannot be operated, go to USB audio device does not work.■

8. Turn the ignition switch to LOCK (0).

9. Disconnect audio unit connector E (14P).

10. Disconnect USB adapter unit connector A (14P).

11. Check for continuity between the terminals of audio unit connector E (14P) and body ground according to the table.

Audio unit connector	Wire color
E5	WHT
E6	RED
E13	BLK
E14	GRN

AUDIO UNIT CONNECTOR E (14P)

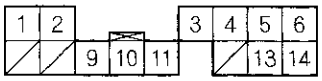

Wire side of female terminals

Is there continuity?
YES—Short to body ground in the wire(s) between the audio unit and the USB adapter unit. Replace the affected shielded harness.■
NO—Go to step 12.

12. Check for continuity between the terminals of audio unit connector E (14P) according to the table.

From terminal	To terminals
E4 (GRY)	E5 (WHT), E6 (RED), E13 (BLK), E14 (GRN)
E5 (WHT)	E6 (RED), E13 (BLK), E14 (GRN)
E6 (RED)	E13 (BLK), E14 (GRN)
E13 (BLK)	E14 (GRN)

AUDIO UNIT CONNECTOR E (14P)

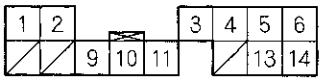

Wire side of female terminals

Is there continuity between any of the terminals?
YES—Short in the wires between the audio unit and the USB adapter unit. Replace the affected shielded harness.■
NO—Go to step 13.

13. Check for continuity between audio unit connector E (14P) and USB adapter unit connector A (14P) according to the table.

Audio unit connector	USB adapter unit connector	Wire color
E5	A5	WHT
E6	A6	RED
E13	A13	BLK
E14	A14	GRN

AUDIO UNIT CONNECTOR E (14P)

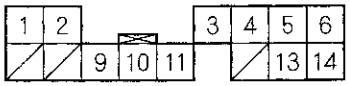

Wire side of female terminals

USB ADAPTER UNIT CONNECTOR A (14P)

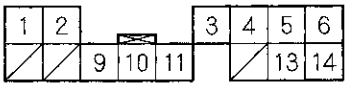

Wire side of female terminals

Is there continuity?

YES—Substitute a known-good USB adapter unit (see page 23-234), then reconnect all of the connectors and recheck. If the symptom/indication goes away, replace the original USB adapter unit. If the symptom/indication is still present, replace the audio unit (see page 23-232).■

NO—Open in the wire(s) between the audio unit and the USB adapter unit. Replace affected shielded harness.■

Symptom Troubleshooting (cont'd)

USB device does not function (with navigation)

NOTE:
- Check the vehicle battery condition first.
- Check the connectors for poor connections or loose terminals.
- Check the USB device requirement:
  - Mass-storage class ready digital audio player with USB 2.0 port
  - More than 256 MB of RAM
  - Supports MP3, WMA, and AAC (encoded with the i-Tunes) files, DRM files are not supported

1. Turn the ignition switch to ON (II), and turn on the navigation unit.

2. Push the AUX button to select USB mode.

   Is USB NO DATA displayed?

   YES—Go to step 3.

   NO—Go to step 7.

3. Turn the ignition switch to LOCK (0).

4. Connect the customer's USB device to a known-good vehicle that is equipped with the USB adapter, and check the USB device operation.

   Is the USB device working properly?

   YES—Go to step 5.

   NO—USB device is faulty. Also check the USB cable and USB adapter connector condition. ■

5. Disconnect USB adapter unit connector B (5P).

6. Check for continuity between terminals of USB adapter connector B (5P) and the USB adapter 5P connector according to the table.

USB adapter unit connector	USB adapter connector
B1	1
B2	2
B3	3
B4	4

USB ADAPTER UNIT CONNECTOR B (5P)

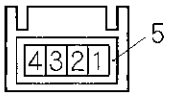

Terminal side of female terminals

USB ADAPTER 5P CONNECTOR

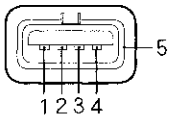

Terminal side of male terminals

Is there continuity?

YES—Replace the USB adapter unit (see page 23-234). ■
NO—Open in the wire(s) between the USB adapter unit and the USB adapter. Replace the affected shielded harness. ■

7. Check the XM operation on the navigation display.

   Are the system working properly on the navigation screen?

   YES—Go to step 4.
   NO—Go to XM radio display is blank and no station information is displayed troubleshooting. ■

8. Turn the ignition switch to LOCK (0).

9. Check that the navigation unit connectors and the USB adapter unit connectors properly connected.

   Are the connectors properly connected?

   YES—Go to step 10.
   NO—Connect the connectors and recheck. ■

10. Measure the voltage between body ground and USB adapter unit connector A (14P) terminal No. 1.

USB ADAPTER UNIT CONNECTOR A (14P)

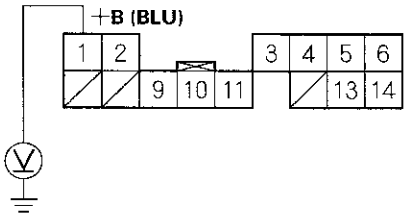

Wire side of female terminals

Is there battery voltage?

YES—Go to step 11.

NO—Repair open in the wire between the navigation unit and the USB adapter unit.■

11. Turn the ignition switch to ON (II).

12. Measure the voltage between body ground and USB adapter unit connector A (14P) terminal No. 11.

USB ADAPTER UNIT CONNECTOR A (14P)

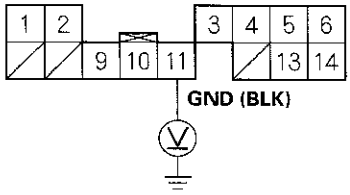

Wire side of female terminals

Is there less than 0.1 V?

YES—Go to step 13.

NO—Repair open or high resistance in the wire between the navigation unit and the USB adapter unit.■

13. Turn the ignition switch to LOCK (0).

14. Measure the voltage between body ground and USB adapter unit connector A (14P) terminal No. 2.

USB ADATPER UNIT CONNECTOR A (14P)

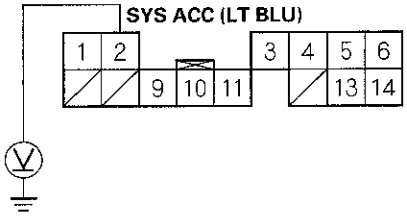

Wire side of female terminals

Is there 10 V or more present?

YES—Go to step 16.

NO—Go to step 15.

15. Measure the voltage between body ground and navigation unit connector E (14P) terminal No. 2.

NAVIGATION UNIT CONNECTOR E (14P)

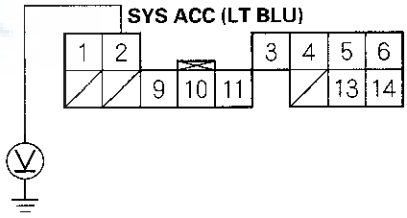

Wire side of female terminals

Is there 10 V or more present?

YES—Repair open or short in the wire(s) between the navigation unit and the USB adapter unit.■

NO—Substitute a known-good navigation unit (see page 23-330) and recheck. If 10 V or more are present, replace the original navigation unit (see page 23-330).■

(cont'd)

Symptom Troubleshooting (cont'd)

16. Turn the ignition switch to ON (II).

17. Measure the voltage between body ground and navigation unit connector E (14P) terminal No. 2.

NAVIGATION UNIT CONNECTOR E (14P)

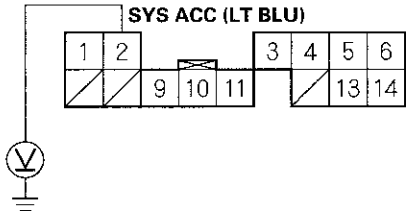

Wire side of female terminals

Is there 10 V or more present?

YES—Substitute a known-good audio unit and recheck. If 10 V or more are present, replace the original navigation unit (see page 23-330).■

NO—Go to step 18.

18. Turn the ignition switch to LOCK (0).

19. Disconnect navigation unit connector E (14P) and USB adapter unit connector A (14P).

20. Check for continuity between terminals of navigation unit connector E (14P) and USB adapter unit connector A (14P) according to the table.

Navigation unit connector	USB adapter unit connector	Wire color
E9	A9	BLU
E10	A10	PNK

NAVIGATION UNIT CONNECTOR E (14P)

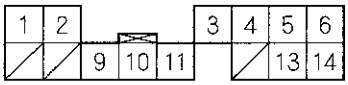

Wire side of female terminals

USB ADAPTER UNIT CONNECTOR A (14P)

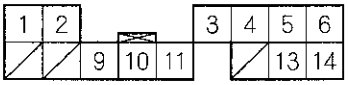

Wire side of female terminals

Is there continuity?

YES—Substitute a known-good USB adapter unit (see page 23-234), then reconnect all of the connectors and recheck. If the symptom/indication goes away, replace the original USB adapter unit. If the symptom/indication is still present, replace the navigation unit (see page 23-330).■

NO—Open in the wire(s) between the navigation unit and the USB adapter unit. Replace the affected shielded harness.■

USB device does not function (without navigation)

NOTE:
- Check the vehicle battery condition first.
- Check the connectors for poor connections or loose terminals.
- Check the USB device requirement:
  - Mass-storage class ready digital audio player with USB 2.0 port
  - More than 256 MB
  - Supports MP3, WMA, and AAC (encorded with the i-Tunes) files, DRN files are not supported

1. Turn the ignition switch to ON (II) and turn on the audio unit.

2. Push the AUX button to select USB mode.

   Is USB NO DATA displayed?

   YES—Go to step 3.

   NO—Go to step 7.

3. Turn the ignition switch to LOCK (0).

4. Connect the customer's USB device to a know-good vehicle that is equipped with the USB adapter, and check the USB device operation.

   Is the USB device working properly?

   YES—Go to step 5.

   NO—USB device is faulty. Also check the USB cable and USB adapter connector condition.■

5. Disconnect USB adapter unit connector B (5P).

6. Check for continuity between terminals of USB adapter connector B (5P) and the USB adapter 5P connector according to the table.

USB adapter unit connctor	USB adapter connector
B1	1
B2	2
B3	3
B4	4

USB ADAPTER UNIT CONNECTOR B (5P)

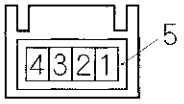

Terminal side of female terminals

USB ADAPTER 5P CONNECTOR

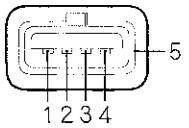

Terminal side of male terminals

Is there continuity?

YES—Replace the USB adapter unit (see page 23-234).■

NO—Open in the wire(s) between the USB adapter unit and the USB adapter. Replace the affected shielded harness.■

7. Turn the ignition switch to LOCK (0).

8. Check that the audio unit connectors and the USB adapter unit connectors properly connected.

   Are the connectors properly connected?

   YES—Go to step 9.

   NO—Connect the connectors, and recheck.■

(cont'd)

Symptom Troubleshooting (cont'd)

9. Measure the voltage between body ground and USB adapter unit connector A (14P) terminal No. 1.

USB ADAPTER UNIT CONNECTOR A (14P)

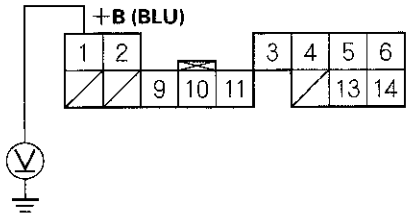

Wire side of female terminals

Is there battery voltage?

YES—Go to step 10.

NO—Repair open in the wire between the audio unit and the USB adapter unit.■

10. Turn the ignition switch to ON (II).

11. Measure the voltage between body ground and USB adapter unit connector A (14P) terminal No. 11.

USB ADAPTER UNIT CONNECTOR A (14P)

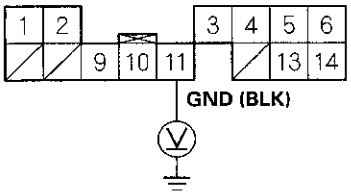

Wire side of female terminals

Is there less than 0.1 V?

YES—Go to step 12.

NO—Repair open or high resistance in the wire between the audio unit and the USB adapter unit.■

12. Turn the ignition switch to LOCK (0).

13. Measure the voltage between body ground and USB adapter unit connector A (14P) terminal No. 2.

USB ADATPER UNIT CONNECTOR A (14P)

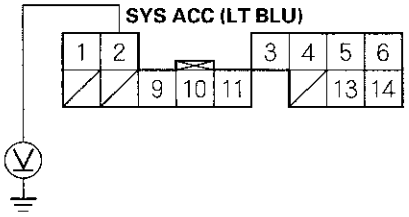

Wire side of female terminals

Is there 10 V or more present?

YES—Go to step 15.

NO—Go to step 14.

14. Measure the voltage between body ground and audio unit connector E (14P) terminal No. 2.

AUDIO UNIT CONNECTOR E (14P)

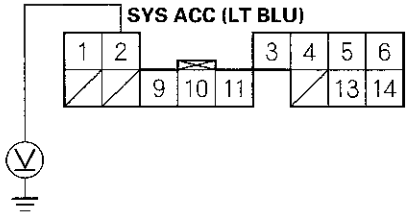

Wire side of female terminals

Is there 10 V or more present?

YES—Repair open or short in the wire(s) between the audio unit and the USB adapter unit.■

NO—Substitute a known-good audio unit (see page 23-232), and recheck. If 10 V or more are present, replace the original audio unit.■

15. Turn the ignition switch to ON (II).

16. Measure the voltage between body ground and audio unit connector E (14P) terminal No. 2.

AUDIO UNIT CONNECTOR E (14P)

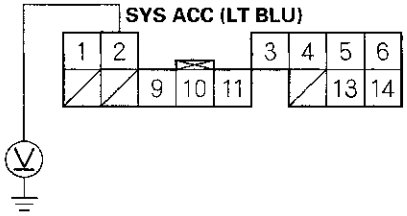

Wire side of female terminals

Is there 10 V or more present?

YES—Go to step 17.

NO—Substitute a known-good audio unit (see page 23-232), and recheck. If 10 V or more are present, replace the original audio unit. ■

17. Turn the ignition switch to LOCK (0).

18. Disconnect audio unit connector E (14P) and USB adapter unit connector A (14P).

19. Check for continuity between body ground and audio unit connector E (14P) terminals No. 9 and No. 10 individually.

AUDIO UNIT CONNECTOR E (14P)

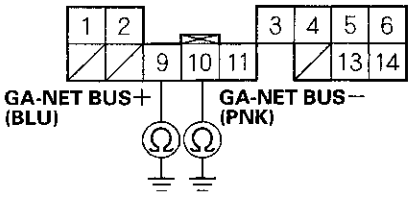

Wire side of female terminals

Is there continuity?

YES—Short to body ground in the wire(s) between the audio unit and the USB adapter unit. Replace the affected shielded harness. ■

NO—Go to step 20.

(cont'd)

Symptom Troubleshooting (cont'd)

20. Check for continuity between the terminals of audio unit connector E (14P) according to the table.

From terminals	To terminals
E3 (BRN)	E9 (BLU), E10 (PNK)
E9 (BLU)	E10 (PNK)

AUDIO UNIT CONNECTOR E (14P)

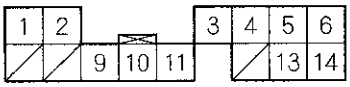

Wire side of female terminals

Is there continuity between any of the terminals?

YES—Short in the wires between the audio unit and the USB adapter unit. Replace the affected shielded harness.■

NO—Go to step 21.

21. Check for continuity between the terminals of audio unit connector E (14P) and USB adapter unit connector A (14P) according to the table.

Audio unit connector	USB adapter unit connector	Wire color
E9	A9	BLU
E10	A10	PNK

AUDIO UNIT CONNECTOR E (14P)

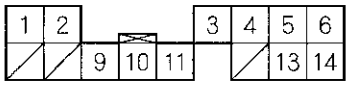

Wire side of female terminals

USB ADAPTER UNIT CONNECTOR A (14P)

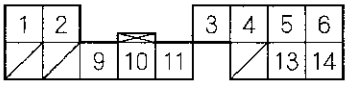

Wire side of female terminals

Is there continuity?

YES—Substitute a known-good USB adapter unit (see page 23-234), then reconnect all of the connectors and recheck. If the symptom/indication goes away, replace the original USB adapter unit. If the symptom/indication is still present, replace the audio unit (see page 23-232).■

NO—Open in the wire(s) between the audio unit and the USB adapter unit. Replace the affected shielded harness.■

Error code: XM NO SIGNAL or XM ANTENNA is displayed (with navigation)

NOTE:
- Check the vehicle battery condition first.
- Check the connectors for poor connections or loose terminals.
- Check XM radio reception in an open area. Poor reception/interference can be caused by tall buildings, mountains, or high-voltage power lines.

1. Check that the XM receiver connectors are properly connected.

   Is the connector connected?

   YES—Go to step 2.

   NO—Reconnect the connector. If the error message does not go away, go to step 2.

2. Check the connector at the XM antenna and the XM antenna lead.

   Is the connector connected?

   YES—Go to step 3.

   NO—Reconnect the connector. If the error message does not go away, go to step 3.

3. Substitute a known-good XM antenna (see page 23-239).

   Is the error message gone?

   YES—Replace the XM antenna (see page 23-239). ■

   NO—Go to step 4.

4. Substitute a known-good XM receiver (see page 23-234).

   Is the error message gone?

   YES—Replace the XM receiver (see page 23-234). ■

   NO—Replace the XM antenna lead. ■

XM radio display is blank and no station information is displayed (with navigation)

NOTE:
- Check the vehicle battery condition first.
- Check the connectors for poor connections or loose terminals.

1. Disconnect XM receiver connector A (14P) and USB adapter unit connector A (14P).

2. Measure the voltage between XM receiver connector A (14P) terminal No. 1 and body ground.

XM RECEIVER CONNECTOR A (14P)

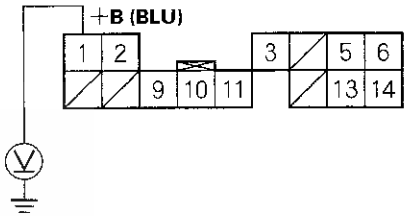

Wire side of female terminals

Is there battery voltage?

YES—Go to step 3.

NO—Repair open in the wire between the XM receiver and the navigation unit connector. ■

3. Turn the ignition switch to LOCK (0).

(cont'd)

Symptom Troubleshooting (cont'd)

4. Reconnect XM receiver connector A (14P).

5. Turn the ignition switch to ON (II).

6. Measure the voltage between XM receiver connector A (14P) terminal No. 11 and body ground.

XM RECEIVER CONNECTOR A (14P)

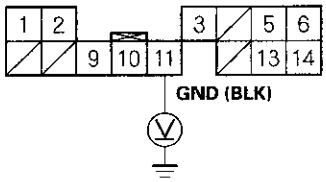

Wire side of female terminals

Is there less than 0.1 V?

YES—Go to step 7.

NO—Repair open in the wire between the XM receiver and the navigation unit.■

7. Turn the ignition switch to LOCK (0).

8. Measure the voltage between XM receiver connector A (14P) terminal No. 2 and body ground.

XM RECEIVER CONNECTOR A (14P)

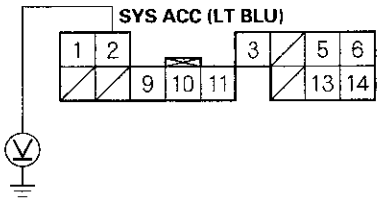

Wire side of female terminals

Is there 10 V or more present?

YES—Go to step 9.

NO—Substitute a known-good XM receiver (see page 23-234), and recheck. If 10 V or more are present, replace the original XM receiver.■

9. Turn the ignition switch to ON (II).

10. Measure the voltage between XM receiver connector A (14P) terminal No. 2 and body ground.

XM RECEIVER CONNECTOR A (14P)

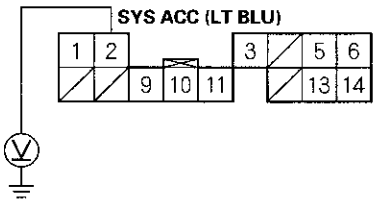

Wire side of female terminals

Is there less than 0.5 V?

YES—Go to step 11.

NO—Substitute a known-good navigation unit (see page 23-330), and recheck. If 0.5 V or less are present, replace the original navigation unit.■

11. Turn the ignition switch to LOCK (0).

12. Disconnect navigation unit connector E (14P) and XM receiver connector A (14P).

13. Check for continuity between navigation unit connector E (14P) terminals No. 9 and No. 10 and body ground individually.

NAVIGATION UNIT CONNECTOR E (14P)

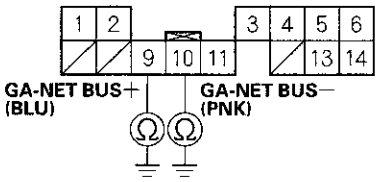

Wire side of female terminals

Is there continuity?

YES—Go to step 14.

NO—Short to body ground in the wire between the XM receiver and the navigation unit. Replace the affected shielded harness.■

14. Check for continuity between XM receiver connector A (14P) according to the table.

From terminal	To terminals
A3 (BRN)	A9 (BLU), A10 (PNK)
A9 (BLU)	A10 (PNK)

XM RECEIVER CONNECTOR A (14P)

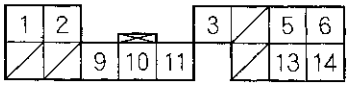

Wire side of female terminals

Is there continuity between any of the terminals?

YES—Short in the wires between the navigation unit and the XM receiver. Replace the affected shielded harness. ■

NO—Go to step 15.

15. Check for continuity between navigation unit connector E (14P) and XM receiver connector A (14P) according to the table.

Navigation unit connector	XM receiver connector	Wire color
E9	A9	BLU
E10	A10	PNK

NAVIGATION UNIT CONNECTOR E (14P)

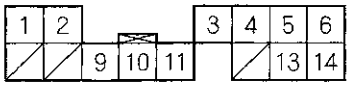

Wire side of female terminals

XM RECEIVER CONNECTOR A (14P)

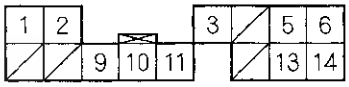

Wire side of female terminals

Is there continuity?

YES—Substitute a known-good XM receiver (see page 23-234), then reconnect all connectors and recheck. If the symptom/indication goes away, replace the original XM receiver. If the symptom/indication is still present, replace the navigation unit (see page 23-330). ■

NO—Open in the wire(s) between the navigation unit and the XM receiver. Replace the affected shielded harness. ■

Symptom Troubleshooting (cont'd)

XM radio preset memory is lost (with navigation)

NOTE:
- Check the vehicle battery condition first.
- Check the connectors for poor connections or loose terminals.
- If you can only tune to channel 000, 001, 174, and 247, make sure the navigation unit is set to channel mode (see owner's manual), if it is set to channel mode, call XM Satellite Radio customer support, and check the account activation status.

1. Turn the ignition switch to ON (II).

2. Turn on the navigation unit, and set each of the XM radio channel preset buttons.

   Do each of the XM radio channel preset buttons set properly?

   YES—Go to step 3.

   NO—Go to step 7.

3. Turn the ignition switch to LOCK (0) for 1 minute, then turn it back to ON (II).

4. Test all of the XM radio channel preset buttons for proper recall operation.

   Do the preset buttons recall the set radio stations?

   YES—System is normal at this time. Check connections at the navigation unit.■

   NO—Go to step 5.

5. Turn the ignition switch to LOCK (0).

6. Reconnect XM receiver connector A (14P).

7. Measure the voltage between XM receiver connector A (14P) terminal No. 1 and body ground.

XM RECEIVER CONNECTOR A (14P)

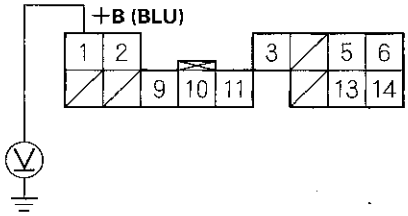

Wire side of female terminals

Is there battery voltage?

YES—Go to step 8.

NO—Repair open in the wire between the navigation unit and the XM receiver.■

8. Reconnect XM receiver connector A (14P).

9. Turn the ignition switch to ON (II).

10. Measure the voltage between XM receiver connector A (14P) terminal No. 11 and body ground.

XM RECEIVER CONNECTOR A (14P)

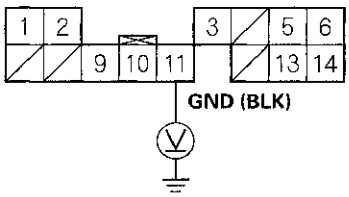

Wire side of female terminals

Is there less than 0.1 V?

YES—Substitute a known-good navigation unit (see page 23-330), and recheck. If the symptom/indication goes away, replace the navigation unit.■

NO—Repair open in the wire between the XM receiver connector and the navigation unit.■

Poor or sound with XM radio (Navigation unit does display XM channels) (with navigation)

NOTE:
- Check the vehicle battery condition first.
- Check the MX radio reception in an open area, Poor reception/interference can be caused by nearby tall buildings, mountains, or high-voltage power lines.
- Check the connectors for poor connections or loose terminals.
- If you can only tune to channel 000, 001, 174, and 247, make sure the navigation unit is set to channel mode (see owner's manual), if it is set to channel mode, call XM Satellite Radio customer support and check the account activation status.

1. Turn the ignition switch to ON (II).

2. Turn on the navigation unit and select XM radio.

3. Check for an error message on the display.

   Are there any messages displayed?

   YES—Go to error code list (see page 23-176).■

   NO—Go to step 4.

4. Turn the ignition switch to LOCK (0).

5. Disconnect navigation unit connector E (14P), USB adapter unit connector A (14P), and XM receiver connector A (14P).

6. Check for continuity between XM receiver connector A (14P) and body ground according to the table.

XM Receiver connector	Wire color
A5	WHT
A6	RED
A13	BLK
A14	GRN

XM RECEIVER CONNECTOR A (14P)

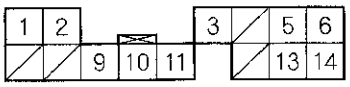

Wire side of female terminals

Is there continuity?

YES—Short to body ground in the wire(s) between the navigation unit and the XM receiver. Replace the affected shielded harness.■

NO—Go to step 7.

(cont'd)

Symptom Troubleshooting (cont'd)

7. Check for continuity between terminals of XM receiver connector A (14P) according to the table.

From termianl	To termianls
A4 (GRY)	AS (WHT), A6 (RED), A13 (BLK), A14 (GRN)
A5 (WHT)	A6 (RED), A13 (BLK), A14 (GRN)
A6 (RED)	A13 (BLK), A14 (GRN)
A13 (BLK)	A14 (GRN)

XM RECEIVER CONNECTOR A (14P)

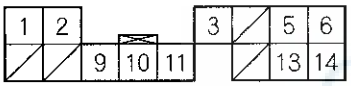

Wire side of female terminals

Is there continuity between any of the terminals?

YES—Short in the wires between the navigation unit and the XM receiver. Replace the affected shielded harness. ■

NO—Short in the wires between the navigation unit and the XM receiver. Replace the affected shielded harness. ■

8. Check for continuity between navigation unit connector E (14P) and XM receiver connector A (14P) according to the table.

Navigation unit connector	XM receiver connector	Wire color
E5	A5	WHT
E6	A6	RED
E13	A13	BLK
E14	A14	GRN

NAVIGATION UNIT CONNECTOR E (14P)

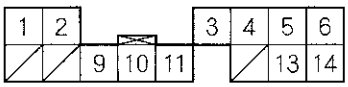

Wire side of female terminals

XM RECEIVER CONNECTOR A (14P)

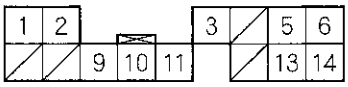

Wire side of female terminals

Is it connected properly?

YES—Substitute a known-good XM receiver (see page 23-234), then reconnect all of the connectors and recheck. If the symptom/indication goes away, replace the original XM receiver. If the symptom/indication is still present, replace the navigation unit (see page 23-330). ■

NO—Open in the wire(s) between the navigation unit and the XM receiver. Replace the affected shielded harness. ■

Sound Quality Diagnosis

Special Tools Required
Diagnostics CD 07AAZ-SDBA100

Use the following tests to check sound quality.

NOTE: Before beginning the following tests, write down the bass, treble, fader and balance settings, and then set them to their center positions for testing.

Left/Right Channel ID

Do this test to confirm proper channel routing.

1. Insert the audio diagnostic CD (T/N 07AAZ-SDBA100) into the navigation unit or audio unit.

2. Play track No. 1 (left, both, right channel ID) at a normal, or slightly higher than normal, volume level.

3. The voice should be audible only from the channel or channels when indicated.

   - If the channel ID is correct for each side, go to the phase test.
   - If the channel ID is not correct, check for;
     – Shorted speaker wire
     – Faulty navigation unit
     – Faulty audio unit

Special Tools Required
Diagnostics CD 07AAZ-SDBA100

Phase Test

Do this test to confirm proper speaker phasing.

1. Insert the audio diagnostic CD (T/N 07AAZ-SDBA100) into the navigation unit or audio unit.

2. Play track No. 2 (phase) at a normal, or slightly higher than normal, volume level.

3. The voice should sound centered and focused when it is in-phase.

4. The voice should sound diffused, and have less bass when it is out of phase.

   - If the voice changes from in-phase to out of phase as indicated by the prompt, the phasing is correct. Go to electrical noise test.
   - If the voice always sounds out of phase, phasing is not correct. Check for;
     – Crossed speaker wires
     – Faulty navigation unit
     – Faulty audio unit

HONDA

Sound Quality Diagnosis (cont'd)

Special Tools Required
Diagnostics CD 07AAZ-SDBA100

Electrical Noise Test

Do this test to check for electrical noise being induced into the audio system.

NOTE: Electrical noise may be caused by outside sources that cannot be handled by the audio system. Make sure you remove any cell phones and/or turn off any aftermarket device before beginning this test.

1. Insert the audio diagnostic CD (T/N 07AAZ-SDBA100) into the navigation unit or audio unit.

2. Play track No. 4 (digital zero) at a normal, or slightly higher than normal, volume level.

3. Operate any electrical device that may create electrical noise in the audio system, including starting the engine.

4. Play track No. 5 (near digital zero) at a normal, or slightly higher than normal, volume level.

5. Operate any electrical device that may create electrical noise in the audio system, including starting the engine.

6. Play track No. 6 (SNR) at a normal, or slightly higher than normal, volume level.

7. Operate any electrical device that may create electrical noise in the audio system, including starting the engine.

   - If no abnormal noise is heard, go to individual speaker test.
   - If the noise is present only during the SNR track, replace the navigation unit or audio unit.
   - If the noise is heard during the digital zero or near digital zero track, check for;
     - Poor ground for the audio unit, engine or battery cable
     - Pinched or shorted speaker wire
     - Faulty navigation unit
     - Faulty audio unit
     - Other faulty components causing excessive electrical noise (ignition coils, alternator, door lock actuators, etc.). Disconnect any suspect components, and then replay the tracks that were originally noisy. If the noise is gone, check the component's circuit and the component.

Special Tools Required
Diagnostics CD 07AAZ-SDBA100

Individual Speaker Test

Do this test to identify a faulty speaker.

1. Insert the audio diagnostic CD (T/N 07AAZ-SDBA100) into the navigation unit or audio unit.

2. Play track No. 30 (steady 300 Hz tone) at a normal, or slightly higher than normal, volume level.

3. Listen to each speaker for poor sound compared to the other speakers. Use the audio unit's fader and balance settings to help isolate the channel with the problem.

   - If the sound quality produced by a specific speaker is poor, substitute it with a known-good speaker. If the poor sound quality continues, go to the sound balance test.
   - If the sound quality is OK, go to the sound balance test.

Special Tools Required
Diagnostics CD 07AAZ-SDBA100

Sound Balance Test

Perform this test to identify a faulty channel or speaker.

1. Insert the audio diagnostic CD (T/N 07AAZ-SDBA100) into the navigation unit or audio unit.

2. Confirm the bass and treble are set to the center positions.

3. Play track No. 3 (pink noise) at a normal, or slightly higher then normal, volume level.

4. A static type sound should be heard through all speakers.

5. Insert the audio diagnostic CD (T/N 07AAZ-SDBA100) into the navigation unit or audio unit of a known-good vehicle.

6. Set the bass and treble to the center position.

7. Play track No. 3 (pink noise) all the same level as was played in step 3.

8. Compare the sounds made by the two vehicles.

   - If the sounds made by the two vehicles are very similar, go to the Frequency Sweep Test (see page 23-230).
   - If the sound does not have as much bass, check the subwoofer and circuit.
   - If the sound does not have enough hiss, check the tweeters and their circuits.

Sound Quality Diagnosis (cont'd)

Special Tools Required
Diagnostics CD 07AAZ-SDBA100

Frequency Sweep

Do this test to find rattles or reverberations that may cause a perception of poor sound quality.

1. Insert the audio diagnostic CD (T/N 07AAZ-SDBA100) into the navigation unit or audio unit.

2. Play track No. 13 (sweep from 500 Hz to 35 Hz) at a normal, or slightly higher than normal, volume level.

3. Listen to each speaker for poor sound quality or reverberations caused by specific frequencies. Use the voice-over to estimate the frequency that causes the vibration. Use the audio unit's fader and balance settings to help isolate the channel with the problem.

   - If vibrations or poor sound quality are heard, go to step 4.
   - If no vibrations or poor sound quality are heard, go to sound judging.

4. Choose the appropriate track from No. 14 to 25 (small range frequency sweep) or 26 to 53 (single frequencies) to recreate the frequency that caused the poor sound quality or vibration located in step 3; this aids in diagnosing the cause.

   NOTE: When you get to the track that recreates the problem, select the repeat function on the navigation unit or audio unit; this will help you isolate the cause.

5. Replace or insulate the source of the vibrations or, if the speaker is the source of the poor sound quality, replace it.

Special Tools Required
Diagnostics CD 07AAZ-SDBA100

Sound Judging

- Do this test to compare overall sound quality, imaging, and dynamics between the customer's vehicle and a known-good vehicle. Only use a vehicle of the same model and trim level for this test.
- Make sure the vehicle is using only OEM speakers.

1. In the customer vehicle, set the bass, treble, fader, and balance settings to the customer's normal settings that were written down before beginning testing.

2. Insert the audio diagnostic CD (T/N 07AAZ-SDBA100) into the navigation unit or audio unit.

3. Play tracks No. 7 to 12 (sound quality, midland, dynamics, and imaging demonstration tracks) at a normal, or slightly higher than normal, volume level. Write down the volume setting being used.

4. Listen to areas of the track that stand out as being either very clear or poorer than other areas of the track.

5. Insert the audio diagnostic CD (T/N 07AAZ-SDBA100) into the navigation unit or audio unit of a known-good vehicle.

6. Play the tracks at the same volume level and the same bass, treble, balance, and fader settings as used in step 3 in the customer's vehicle.

7. Listen to the same area of the track that stood out as being either very clear or poorer than other areas of the track.

8. Compare the customer vehicle's sound quality results to the known-good vehicle's results.

   - If the sound quality in the customer vehicle is comparable to the sound quality in the known-good vehicle, then the customer's vehicle is operating as designed.
   - If the sound quality is not comparable, check these items in order.
     - Loose or improperly installed speakers or other hardware that may become excited by the vibrations generated by the speakers
     - Damaged speaker(s)
     - Faulty navigation unit
     - Faulty audio unit

Seek Stop Test

Do this test to check the performance of the audio unit's AM and FM reception. Refer to symptom troubleshooting; audio system sound is weak or distorted (see page 23-196), or no sound is heard from the speakers (display is normal), with navigation (see page 23-188), without navigation (see page 23-190) before continuing with this test.

NOTE:
- Window tint, aftermarket theft-recovery devices and other aftermarket accessories may reduce radio reception.
- Changes in cloud cover and other atmosphere conditions will affect the ability of the navigation unit or audio unit to receive radio signals.

1. Park the customer's vehicle in an open area away from buildings or other obstructions.

2. Park a known-good vehicle (same year, model, and trim level) next to the customer's vehicle, facing the same direction.

3. Start the engine in the customer's vehicle, and turn on the radio.

4. Set the FM receiver to 87.7 MHz.

5. Press the Seek + button and record the first station that the navigation unit or audio unit locks onto.

6. Press the Seek + button repeatedly, and write down each station that the navigation unit or audio unit locks onto until the station recorded in step 5 is reached again.

7. Set the AM receiver to 530 kHz.

8. Press the Seek + button, and record the first station that the navigation unit or audio unit locks on to.

9. Press the Seek + button repeatedly, and write down each station that the navigation unit or audio unit locks onto until the station recorded in step 8 is reached again.

(cont'd)

Sound Quality Diagnosis (cont'd)

10. Turn the ignition switch to LOCK (0).

11. Start the engine in the known-good vehicle, and then do steps 4 thru 10 on the known-good vehicle.

12. Compare the number of stations received in steps 6 and 9 in the customer's vehicle with the number of stations received in the known-good vehicle.

    - If the number of stations received is the same, or within 10 %, the audio unit's tuner performance is OK. The problem may be atmospheric conditions, multi path interference, or other obstructions to the radio signal.
    - If the customer's vehicle receives fewer stations by at least 10 %, go to step 2 of poor AM or FM radio reception of interference, with navigation (see page 23-178), without navigation (see page 23-182).

Audio Unit Removal/Installation

Without navigation

SRS components are located in this area. Review the SRS component location (see page 24-11).
Also review the precautions and procedures (see page 24-13) in the SRS section before doing repairs or service.

NOTE:
- Put on gloves to protect your hands.
- Take care not to scratch the dashboard and related parts.
- Lay a workshop towel under the parts when working on them to protect the face panel from scratches or other damage.
- Do not work in a dusty or dirty place.
- Discharge static electricity from your body before and during the work.
- Do not touch the circuit board(s) with your bare hands.
- Do not work with dirty hands.
- Be careful not to fold the flat plate cable.
- Do not touch the terminal connector of the flat plate cable with your bare hands (If you have touched it, wipe it off thoroughly.).
- Eject all the discs before removing the audio unit to prevent damaging the CD player's load mechanism.
- If you are replacing the audio unit, write down the audio presets (if possible), and enter them into the new audio unit.

1. Make sure you have the anti-theft code for the audio system.

2. Remove the subdisplay visor (see page 20-87).

3. Remove the center pocket hole lid and bolts, then pull out the center panel (A).

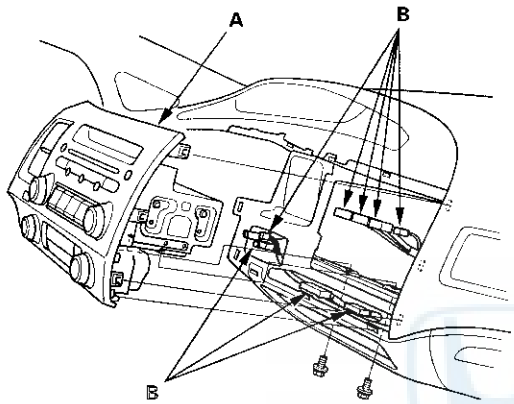

4. Disconnect the connectors (B), then remove the center panel.

5. Remove the bolts, screws and the brackets (A).

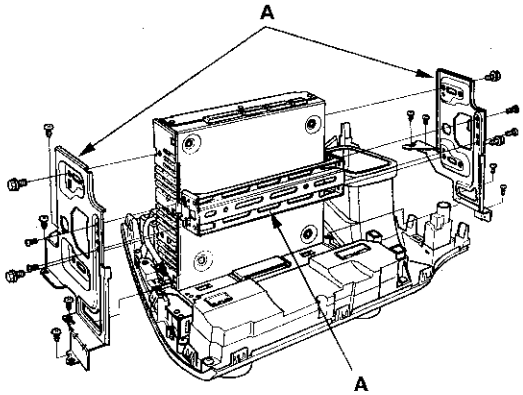

6. Remove the screws, rear covers (A) and the audio unit (B) from the center panel display (C).

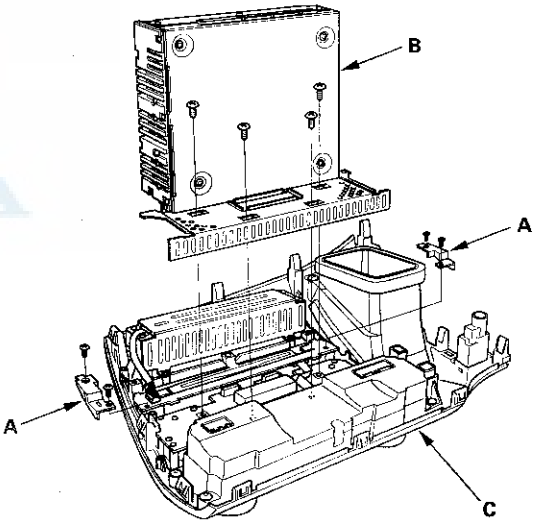

7. Install the audio unit in the reverse order of removal, and note these items:

   - Make sure all connectors and antenna lead are secure.
   - Enter the anti-theft code for the audio system, then set the clock.

XM Receiver Removal/Installation

1. Open the trunk lid and remove the right trunk side trim panel (see page 20-68).

2. Disconnect connectors (A) from the XM receiver (B).

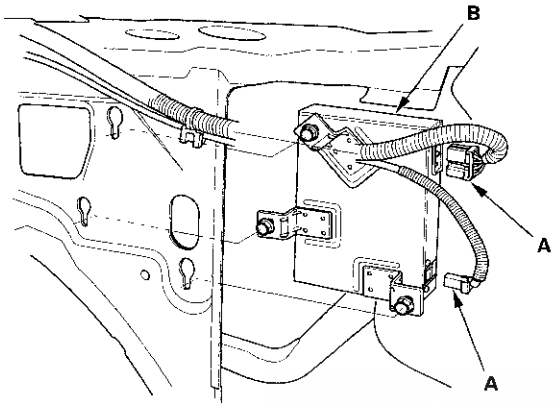

3. Loosen the three bolts, and remove the XM receiver.

4. Install the XM receiver in the reverse order of removal.

USB Adapter Unit Replacement

1. Remove the front passenger's seat (see page 20-105) and pull back the carpet.

2. Disconnect the connectors (A) from the USB adapter unit (B).

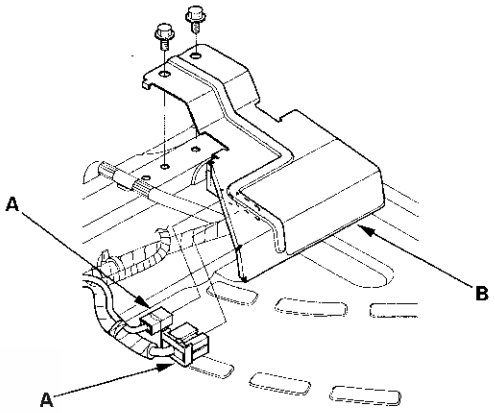

3. Remove the bolts and the USB adapter unit.

4. Install the USB adapter unit in the reverse order of removal.

Speaker Replacement

Front Door Speaker

1. Remove the front door panel (see page 20-7).
2. Remove the screw. Then lift the speaker (A) straight up to release the lower clips (B).

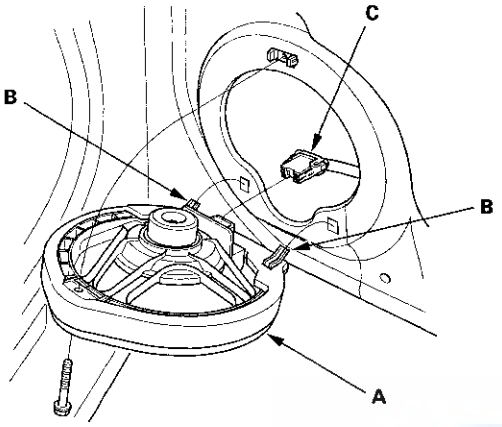

3. Disconnect the 2P connector (C), and remove the speaker.
4. Install the speaker in the reverse order of removal.

Tweeter

1. Carefully pry the tweeter grille (A) out of the dashboard. Be careful not to damage the tweeter grille and the dashboard.

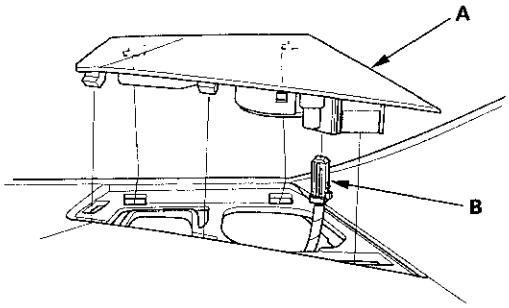

2. Disconnect the 2P connector (B) from the tweeter.
3. Remove the tweeter from the tweeter grille.

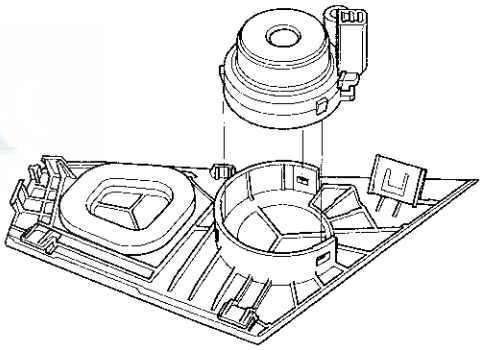

4. Install the tweeter in the reverse order of removal.

(cont'd)

Speaker Replacement (cont'd)

Rear Speaker

1. Remove the rear speaker grille (A).

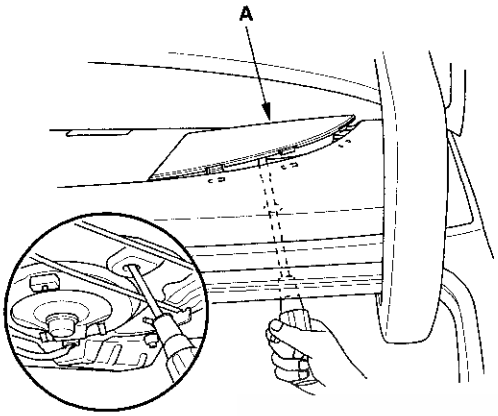

2. Remove the screw. Then lift the speaker (A) straight up to release the clips (B).

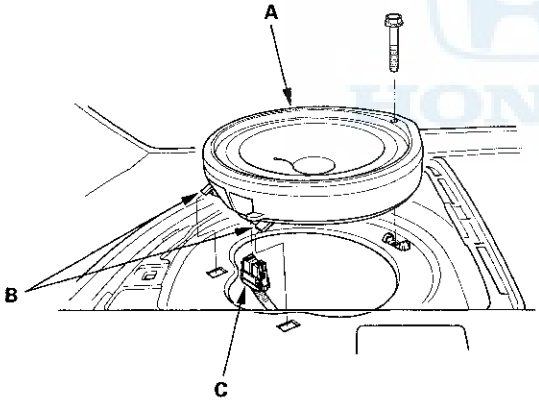

3. Disconnect the 2P connector (C), and remove the speaker.

4. Install the speaker in the reverse order of removal.

Auxiliary Jack Assembly Replacement

1. With navigation: Remove the navigation unit (see page 23-330).
   Without navigation: Remove the audio unit (see page 23-232).

2. Carefully pull out the auxiliary jack assembly (A), then disconnect the 5P connector (B).

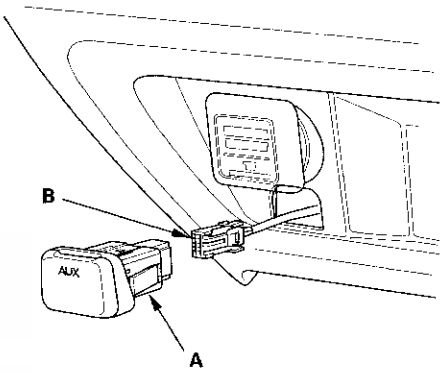

3. Install the auxiliary jack assembly in the reverse order of removal.

USB Adapter Replacement

1. Remove the center console (see page 20-79).

2. Detach the USB adapter cable (A) from the clip. Remove the cover (B) and disconnect the USB adapter cable connector (C).

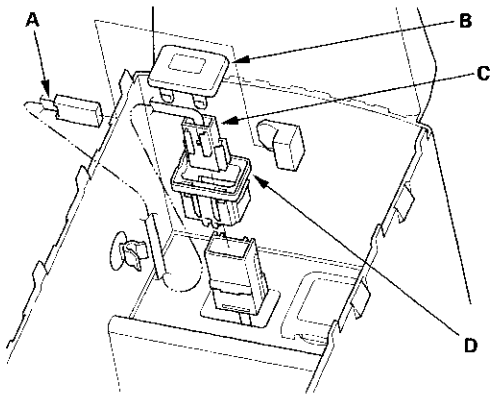

3. Carefully pull out the USB adapter holder (D) from the center condole box.

4. Install the USB adapter in the reverse order of removal.

Audio Remote Switch Test

SRS components are located in this area. Review the SRS component location (see page 24-11).
Also review the precautions and procedures (see page 24-13) in the SRS section before doing repairs or service.

1. Remove the driver's airbag assembly (see page 24-184).

2. Remove the 20P connector (A) from the cable reel (B).

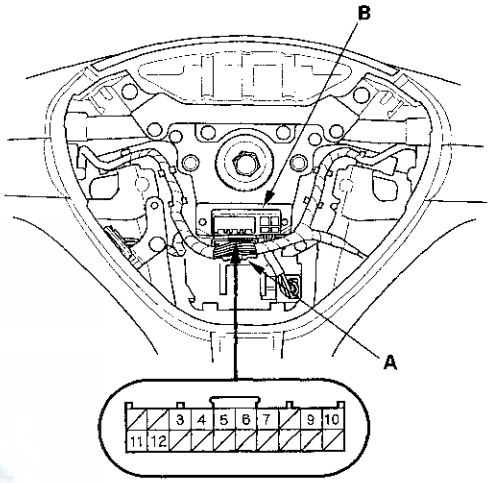

3. Measure the resistance between terminals No. 9 and No. 10 in each switch position according to the table.

Position	Resistance
No button pressed	About 10 kΩ
MODE	About 3.7 kΩ
CH (+)	About 1.7 kΩ
CH (−)	About 775 Ω
▲ (VOL.UP)	About 357 Ω
▼ (VOL.DOWN)	About 100 Ω

4. If the resistance is not as specified, replace the audio remote switch (see page 23-238).

Audio Remote Switch Replacement

SRS components are located in this area. Review the SRS component location (see page 24-11).
Also review the precautions and procedures (see page 24-13) in the SRS section before doing repairs or service.

1. Remove the steering wheel (see page 17-6).
2. Remove the audio remote switch (see page 17-7).
3. Install the audio remote switch in the reverse order of removal.

AM/FM Antenna Replacement

Without navigation

1. Remove the headliner (see page 20-71).
2. Disconnect the AM/FM antenna lead 3P connector (A) from the AM/FM antenna (B).

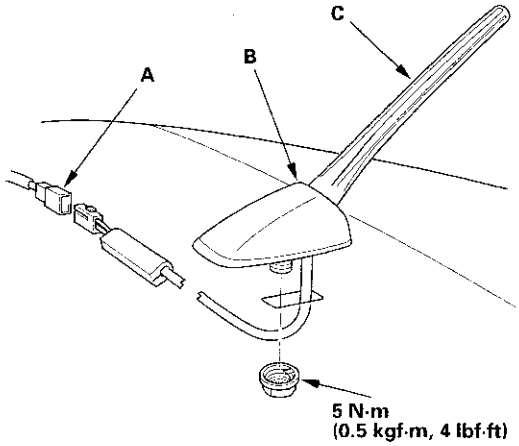

3. Remove the nut, then carefully pull out the AM/FM antenna. If necessary, remove the antenna mast (C).
4. Install the AM/FM antenna in the reverse order of removal.

AM/FM/XM Antenna Replacement

With navigation

1. Remove the headliner (see page 20-71).

2. Disconnect the AM/FM antenna lead 3P connector (A) and the XM antenna lead 2P connector (B) from the AM/FM/XM antenna (C).

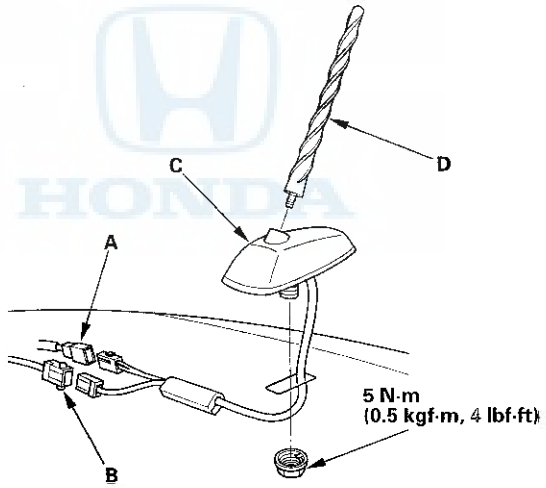

3. Remove the nut, then carefully pull out the AM/FM/XM antenna. If necessary, remove the antenna mast (D).

4. Install the AM/FM/XM antenna in the reverse order of removal.

Navigation System ('09 models)

Component Location Index

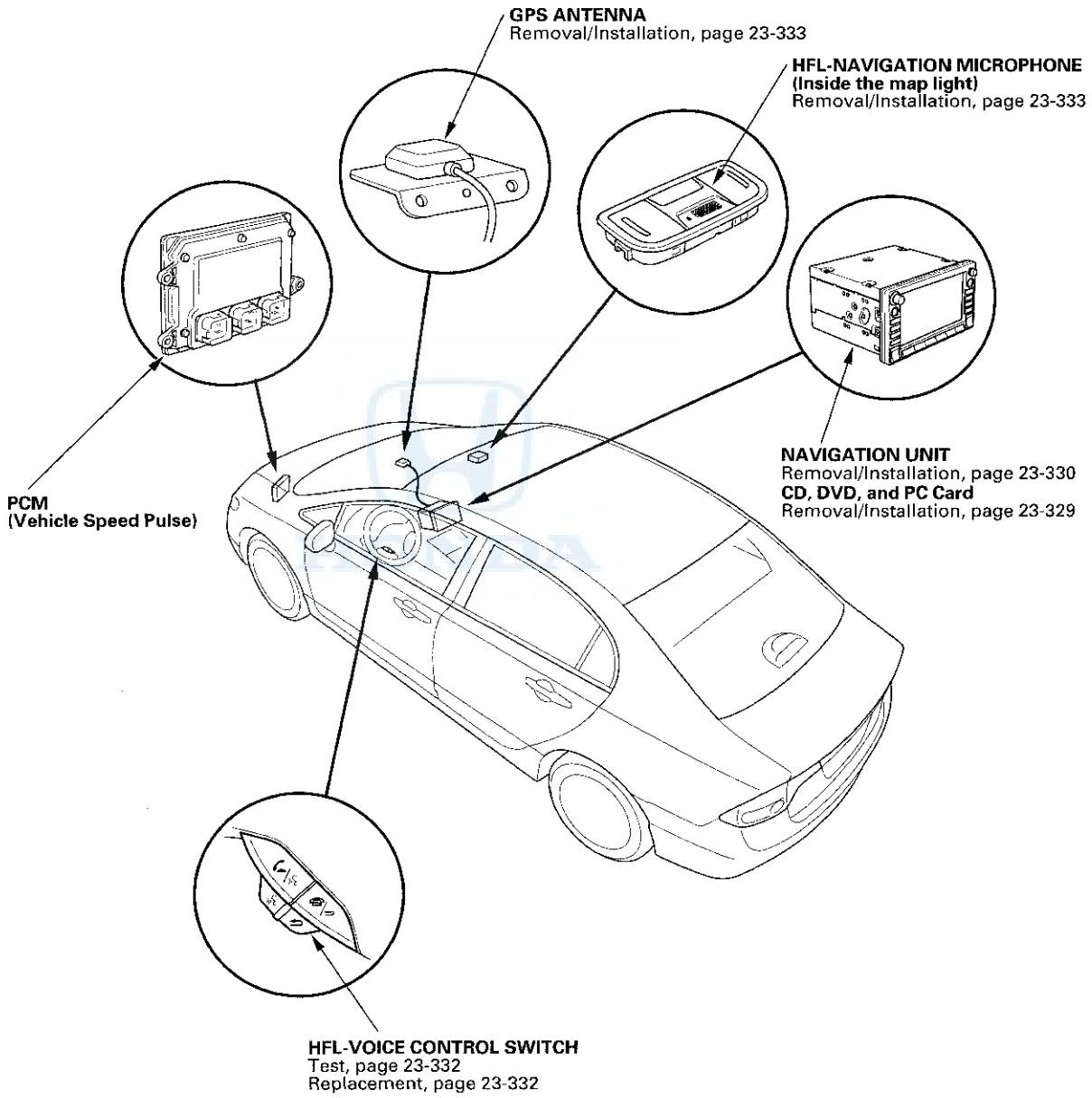

General Troubleshooting Information

General Operation

Refer to the navigation system manual for the navigation system operating procedures.

Anti-theft Feature

The navigation system and audio unit have a coded theft protection circuit. Make sure you have the anti-theft security code before:

- Disconnecting the battery.
- Disconnecting the navigation unit connector A (24P) and C (8P).
- Removing the No. 23 (10 A) fuse from the under-hood fuse/relay box.

After service, reconnect power to the navigation unit, and turn the ignition switch to ON (II). Enter the 4-digit anti-theft security code, then select Done.

If the code cannot be found, use the interactive Network (iN) to look it up. You can view the serial number in one of the ECU Info diagnostic screens (see page 23-272). Alternatively, you can find the serial number on the underside label which is located on the navigation unit in the dash.

When replacing the navigation unit, be sure to give the customer the new anti-theft security code.

Symptom Diagnosis

Certain circumstances and system limitations will result in occasional vehicle positioning errors. Some customer's may think this indicates a problem with the navigation system when, in fact, the system is normal. Keep the following items in mind when interviewing customer's about symptoms of the navigation system.

Self-Inertial Navigation Limitations

The limitations of the self-inertial portion of the navigation system (the yaw rate sensor and the vehicle speed signal) can cause discrepancies between the vehicle's actual position and the indicated vehicle's position (GPS vehicle position).

The following circumstances may cause vehicle positioning errors:

- Moving the vehicle with the engine stopped and the vehicle stopped, such as by ferry or tow truck, or if the vehicle is spun on a turn table.
- Tire slippage, changes in tire rolling diameters, and some driving situations may cause discrepancies in travel distances. Examples of this include:
  - Continuous tire slippage on a slippery surface
  - Driving with snow chains mounted
  - Abnormal tire pressure
  - Incorrect tire size
  - Frequent lane changes across a wide highway
  - Continuous driving on a straight or gently curving highway
  - Very bumpy roads
- Tolerances in the system and map inaccuracies sometimes limit how precisely the vehicle's position is indicated. Examples of this include:
  - Driving on roads not shown on the map (map matching is not possible)
  - Driving on a road that winds in one direction, such as a loop bridge, an interchange, or a spiral parking garage
  - Driving on a road with a series of sharp hair-pin turns
  - Driving near a gradual highway exit or transition
  - Driving on one of two close parallel roads
  - Making many 90 degree turns

Global Positioning System (GPS) Limitations

The GPS cannot detect the vehicle's position or elevation during the following instances:

- For the first 5 to 10 minutes after reconnecting the battery (this process can take as long as 45 minutes).
- When the satellite signals are blocked by tall buildings, mountains, tunnels, large trees, inside parking structures or large trucks.
- When the GPS antenna is blocked by metallic window tinting or by an object placed above it in the vehicle. The GPS antenna requires a clear unobstructed view of the sky.
- When there is no satellite signal output (signal output is sometimes stopped for satellite servicing).
- When the satellite signals are blocked by the operation of some electronic aftermarket accessories including, but not limited to non-OEM in-dash entertainment units (radio, CD players/changers, radar detectors and theft recovery systems) and cell phones placed near the navigation system.

(cont'd)

General Troubleshooting Information (cont'd)

The accuracy of the GPS is reduced during these instances:
- Metallic window tinting above the GPS antenna.
- When only three or less satellite signals are received (Four satellite signals are required for accurate positioning).
- When driving near high tension power lines.
- When the satellite control centers are experiencing problems.

Muting Logic

Whenever the navigation system is giving guidance, the front speakers are muted. When the voice control system is being used, all of the speakers are muted. If the HandsFreeLink is in use, the voice control system is unavailable and a message appears onscreen.

LCD Unit Limitations

NOTE: The screen is not touch sensitive. Use the interface dial and buttons to select items on the screen.

- In cold temperatures, the display may stay dark for the first 2 or 3 minutes until it warms up.
- When the display is too hot because of direct summer sunlight, it will remain dark until the temperature drops (you may see an error message displayed stating this fact).
- When the humidity is high and the interior temperature is low, the display may appear cloudy. The display will clear up after some use.
- Fingerprints on the screen may be noticeable. Clean the screen with a soft, damp cloth. You may use a mild cleaner intended for eye glasses or computer screens. To avoid scratching the panel, do not rub too hard or use abrasive cleaners or shop towels.

Symptom Duplication

- When the symptom can be duplicated, verify that it is not a characteristic of the system. Review the navigation system manual and compare it to a known-good vehicle (with the same software and database), under the same conditions. If the symptom is not the same as the known-good vehicle, follow the self-diagnostic procedures and the appropriate troubleshooting procedures.
- When the symptom does not reappear or only reappears intermittently, ask the customer about the conditions when the symptom occurred.
  - Always ask the customer to demonstrate the problem.
  - Try to establish possible user error or a misunderstanding of the system.
  - Try to establish if outside interference may have been the cause.
  - Try to duplicate the symptom under the same conditions the customer experienced.
  - Vibration, temperature extremes, and moisture (dew, humidity) are factors that are difficult to duplicate.
  - Inspect the vehicle for after-market electronic devices (vehicle locators, amps, radar detectors, etc.) that may be hidden.

NOTICE

When troubleshooting navigation system problems, ensure that the known-good vehicle is the same software version year and model as the vehicle being serviced. Mixing incompatible navigation DVDs or other system components can delay the troubleshooting process by creating symptoms or issues causing effects unrelated to the original problem.

Service Precautions

- If you need to replace the navigation unit, you can back-up the navigation data and transfer it to a new navigation unit. See Save users memory (see page 23-285).
- When the battery is disconnected, the internal GPS clock resets to 0:00. The clock resets to the correct time after the system finishes GPS initialization.
- Before disconnecting the battery, make sure you have the anti-theft codes for the audio system and the navigation system, and write down the audio presets. Also obtain any PGM-FI or transmission DTCs and freeze frame date (which are lost when the ECM/PCM loses power).
- After reconnecting the battery, you have to wait to get the initial signal from the satellite. It will take from 10 to 45 minutes.
- Adjust the setup clock settings (time zone and daylight savings) in the navigation system.
- Before returning the vehicle to the customer, enter the anti-theft codes for the audio system and the navigation system.

System Initialization

If the navigation system loses power (like the battery was disconnected) the navigation system requires initialization. Once completed, your system is ready to use.

This initialization requires the following:

- Entering the 4-digit anti-theft security code to unlock the system
- GPS initialization (may not be needed depending of the length of time the system was without power)
- Map matching to align the GPS to a location on the map

Entering the Security Code

Any time the navigation system loses power, you need to enter the 4-digit anti-theft code on the navigation system display. This 4-digit code is located on a small code card that was given to the customer. Enter the 4-digit code, then select Done.

If the navigation system anti-theft code is missing, use the interactive Network (iN) to look it up. You need the serial number for the navigation unit to do this.
You can view the serial number by entering the diagnostic mode. Select Unit Check from the main menu, then the ECU info diagnostic screen. This allows you to get the serial number without removing the navigation unit.

The iN may display more than one code for a given serial number. This is because serial numbers are not unique. You may have to try more than one 4-digit code. If no code is shown, or if the code(s) given do not work in the navigation unit, contact the Automobile Warranty department. If the code 0000 works, replace the navigation unit.

When replacing the navigation unit or audio unit, make sure you give the customer the new anti-theft security code.

GPS Initialization

NOTE: You must park the vehicle outside with a clear view of the southern sky.

Depending on the length of time the battery was disconnected, your system may require GPS initialization. If it does, the following screen appears:

> **The navigation system lost power and is acquiring its location from the GPS satellites. This usually takes less than 10 minutes.**
>
> *** Start the engine.**
> *** Park the vehicle in an open area away from trees, power lines, and tall buildings.**
> *** Remove loose articles, cell phones, or electrical accessories located near the GPS antenna.**
> *** If this screen is displayed repeatedly when starting the vehicle, see your dealer.**

(cont'd)

General Troubleshooting Information (cont'd)

If this procedure is not necessary, the system proceeds directly to the Disclaimer screen. During initialization, the system searches for all available GPS satellites, and obtains their orbital information. During this procedure the vehicle should be out in the open with a clear view of the sky.

If the navigation system finds the satellites properly, this box clears, and changes to the Disclaimer screen. If within 10 minutes the system fails to locate a sufficient number of satellites to locate your position, the following screen appears.

> **Something is interfering with the system's ability to acquire its location. Check the following:**
>
> *** The vehicle must be in an open area with a clear view of the sky.**
> *** Remove sources of GPS interference like metallic window tint above antenna, or electrical items near antenna(see owner's manual for details).**
> *** Check GPS antenna cable connection.**
> *** Restart the engine and repeat the GPS acquire procedure. If the problem persists, see your dealer.**

It this screen appears, turn off the engine, then restart the vehicle and move it to a different location. If the dicslaimer screen appears, the GPS initialization is complete.

NOTE:
- The average acquiring time is less than 10 minutes, but it can take as long as 45 minutes.
- If the system is still unable to acquire a signal, follow the instructions on the screen. If this screen appears again, go to troubleshooting for the GPS icon is white or not shown (see page 23-316).
- Skip to a CSF screen by pushing the MENU and INFO buttons at the same time and can move to an System Links screen.

Map Matching

This part of the initialization matches the GPS coordinates with a road on the map screen. To do this part of the procedure, make sure that the navigation system displays a map, and drive the vehicle on a mapped road shown on the map screen. Do not enter a destination at this time. When the name of the current road you are driving on, appears at the bottom of the screen, the entire procedure is complete. Your system is now ready to use.

Obtaining A Navigation DVD

If the Navigation DVD is lost or damaged, or you need a yearly updated DVD, you have two ways to purchase one. You can either call (888) 549-3798, or order on-line at www.hondanavi.com.

Both methods require a credit card. The DVD for this model has a turquoise label, and cannot be ordered through the parts system. The following DVDs will not work in this navigation system:

- Earlier model navigation DVDs (black, orange, light blue label and the older versions with a white label)
- Map software programs manufactured by other companies
- DVD movies, or DVDs containing audio recordings

Update DVDs are available for purchase usually in the fall of each year. They may contain the following:

- Enhanced maps and points of interest (POI) coverage
- Fixes for minor software bugs
- Additional features

NOTE:
- Map matching must be done any time the DVD is removed or replaced.
- Always order navigation DVDs on an as-needed basis. During a typical model year, each color DVD may undergo a half a dozen software only version upgrades to fix minor issues on some or all models the DVD supports. This is normal. Usually only the letter at the end of the version number changes, while the database (maps and POIs) remain unchanged.
- Never promise your customer future free updates. There are no free programs for updating the navigation DVD. Update DVDs are generally available for purchase each fall. The online DVD order site provides information when an update for a particular color DVD is available.
- Damaged discs are not covered by warranty unless they have been damaged by the navigation system.

DVD Handling and Cleaning

To avoid damaging or leaving fingerprints on the DVD, always handle it by the edges and place it in a jewel case whenever it is outside the navigation unit. Deep scratches or fingerprints on the back of the DVD can cause intermittent rebooting or other system errors.

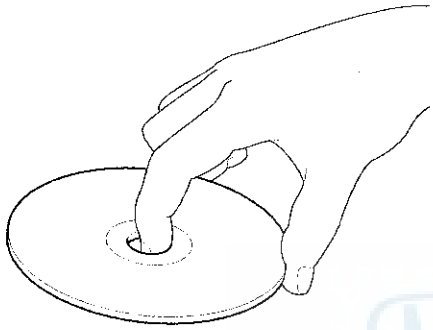

Smudges and fingerprints can be carefully removed using a mild cleaner and tissues designed to clean eyeglasses. To clean a DVD, use a clean soft cloth. Very gently wipe across the DVD from the center to the outside edge, never in a circular motion.

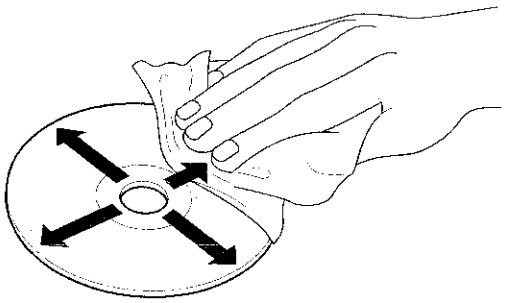

Do not place stabilizer rings or labels on the DVD.

Earliest DVD Version Application for Each Model

Each navigation system DVD contains a map/POI (point of interest) database and the navigation system software for each model that it supports. Inserting an older DVD can cause problems since it lacks the software to provide the specific features needed for that model. Unfortunately, the navigation software does not detect or warn you that the version is outdated, and it may even appear to operate.

NOTE: Replacing a DVD just because the version number is higher is not always warranted. A higher software version does not necessarily mean it contains newer software for your model. The DVD contains software for all models that use the same color DVD, and a revised number may or may not have software fixes or upgrades for the model in question.

Typical warning symptoms that an outdated DVD is being used include:

- The Honda model navigation screen may display a Acura logo while booting up.
- A newly introduced model feature or current accessory may not display properly, and Extension will display instead.

  NOTE: Extension may be displayed when using Music Link, but should never be displayed when XM is selected.

- The current street (the street being driven on) does not appear properly at the bottom of the map screen display when the vehicle is driven on a main road.

  NOTE: If necessary, compare the operation to the navigation system of the same model and year vehicle that has a current DVD.

(cont'd)

General Troubleshooting Information (cont'd)

How to Identify Navigation DVD Versions, and How to Inspect A DVD for Damage

To determine the navigation version on a particular model, start the engine, then locate the navigation unit. Open the DVD door, and push the eject button to eject the DVD. Hold the DVD by the edges, and check for these items:

- Check any official Honda service website for more service information about the navigation DVDs.
- The DVD label color.
- Read the DVD version on the label, and note it on the repair order. The version number is near the bottom of the label text (for example, ver: 4.23A). You will need this version number:
  - To verify that the DVD version is appropriate for the vehicle. Check any official Honda service website for more service information.
  - Any time you call Tech Line regarding a navigation system issue.
  - To answer customer inquires concerning update or coverage issue.

    NOTE: Customers may obtain DVDs from sources outside the normal ordering process. If you determine this is the case, recommend that your customer purchase the appropriate DVD from the Honda Disc Fulfillment Center (see ORDERING A DVD).

  - Check the underside of the DVD for signs of mishandling. Deep scratches, or random scratches, light swirl marks, or fingerprints can cause random lock-ups, reboots, erratic voice response, erratic positioning errors, and DVD read or format errors.

    NOTE: A damaged DVD is not covered under warranty unless the disc is damaged by the navigation unit. Damage by the navigation unit typically appears as circular scratches caused by something rubbing against the DVD as it spins. The damage may appear as arcs or complete circles on the DVD reading surface.

  - Verify that the underside of the DVD is silver, and not a copy with a blue color. Copies will not work properly and can cause other symptoms that mimic hardware problems.

- Incorrectly colored DVDs being put into navigation vehicles. This causes the system to either display error messages, or causes system malfunctions that mimic a hardware problem. This results in the customer leaving with a malfunctioning navigation system.
- The DVD version provided to the customer is out-of date or incompatible with a particular model. This inconveniences your customer by delaying the repair, or by causing additional (and unnecessary) returns to your dealership.
- The customer experiences bugs or other issues that have already been resolved in later versions currently available at the fulfillment desk.

If the DVD is defective, or has any of the issues mentioned above, return the vehicle to your customer and recommend that they order the proper DVD from the Honda Disc Fulfillment Center.

NOTE: Navigation DVDs do not come with replacement navigation units. If you are replacing a navigation unit because it is defective (following appropriate service manual troubleshooting), and the DVD does not eject, order a DVD. See Obtaining a navigation DVD.

How to Answer Customer Questions About Navigation Coverage

Some customers may ask questions regarding a city, address, or POI (point of interest) covered by the navigation system. It is better to verify a coverage question on an actual vehicle than to disappoint your customer by promising coverage that may be incomplete or missing in their area. The following suggestions can be used to answer coverage inquiries from your customer.

Is my address covered by the navigation system?

Using a current production vehicle (of the same model), try and enter the customer's address (street first) to see if their area is covered. Always enter the street first, because sometimes their city may be included in a neighboring township, or under some larger metropolitan city name. If the address is shown in a later year vehicle, but not your customer's vehicle, you might recommend that your customer purchase an update.

Is my city covered by the navigation system?

For general questions about whether a city is covered, view the map coverage link on the DVD order site. On the site, select a year, and select a model, then click on the Coverage link. You then select a state or province, and the cities are listed. Of course, this does not guarantee that the customer's road or address is in the system. Verifying on an actual production vehicle is always the best guarantee that your information is accurate.

The gas station on my corner is now a restaurant. Why is it still incorrect in the navigation system?

For POI-related client questions, explain that businesses are constantly moving, and there can be a considerable lag in updating the millions of POIs in the system. The database is updated annually, and the best way to the verify whether the POI is accurate is verify the inquiry on a current production vehicle.

Answers to these and other questions regarding coverage can be found in these locations:

- In the Frequently Asked Questions section of the navigation system manual.
- At the online DVD order site, by clicking on the FAQs link.

How do I find the local address of a business that is part of a national chain (for example, Starbucks)?

There are three ways to find the local address to businesses:

- If you know the phone number of the business, select Phone Number and enter the 10 digit phone number (area code plus seven digit number).
- Select Category, then Restaurant. Enter the keyword Star. The resulting list includes all restaurants that have the letters Star anywhere in the name.
- Select Name and enter Starbucks. For more common business names, like McDonalds, you may have to search through a list that includes other businesses like McDonalds Welding, McDonalds Automotive, etc.

Precaution on Customer "Sneak Previews"

Your customer might request a look (or sneak preview) at features in the latest navigation software. You should never preview a navigation DVD in a customer's vehicle. Inserting a newer DVD installs the latest software from the DVD into the memory of the customer's navigation system. When the original DVD is reinstalled, the newer software remains in memory and is often incompatible with the customer's original DVD Map and POI database, or software.

If your customer wishes to see the latest navigation coverage or software features, demonstrate it on an in-stock vehicle that already has the latest DVD version.

If a newer version is loaded either by the dealer or the customer, the only remedy is to enter the navigation diagnostic mode's Version screen and do a forced download. Check any official Honda service website for more information about what patches may need reinstalling.

Why are some features different or missing compared to my previous Honda vehicle?

Hardware and software continually go through updates and improvements. Features may change or disappear over time based on the navigation system development.

(cont'd)

General Troubleshooting Information (cont'd)

How to Check Error History

The Error History feature is to record intermittent navigation issues that occur while using the system. Sometimes the customer complaint cannot be duplicated. The error history may record the information needed to diagnose the problem. To check the error history:

1. Start the engine.
2. Press and hold the MAP/GUIDE, MENU, and CANCEL buttons for 3 seconds.
3. When the Select Diagnosis Items menu is displayed, select Detail Information & Setting.

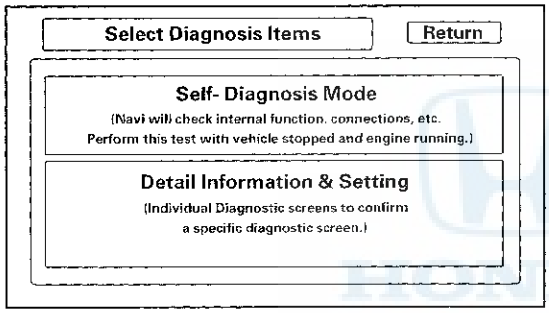

4. When the navigation unit has hard codes, the Error History icon appears yellow when the Self Diagnosis mode (System links) screen is displayed. When no hard errors are stored, the icon appears gray. To view the errors with their DTC codes, select the error history icon.

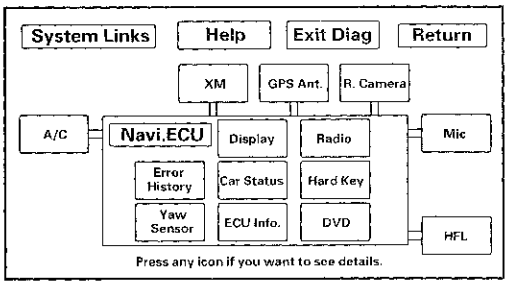

5. Select Hard Error.

   NOTE: Soft errors are for factory use only.

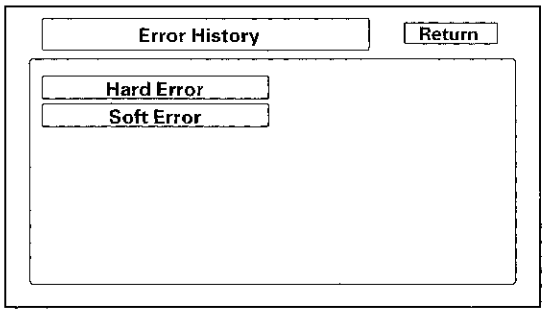

Hardware Error History

6. The Hard Error screen displays the following information for each error:
   - The DTC trouble code for the error
   - A brief description of the DTC code
   - The date and time when the error occurred.

   NOTE:
   - To see additional errors, use the interface dial to select UP or DOWN.
   - Select Clear to delete the error history. The Save feature is for factory use only.

7. Use the DTC Symptom Troubleshooting table to troubleshoot the error.

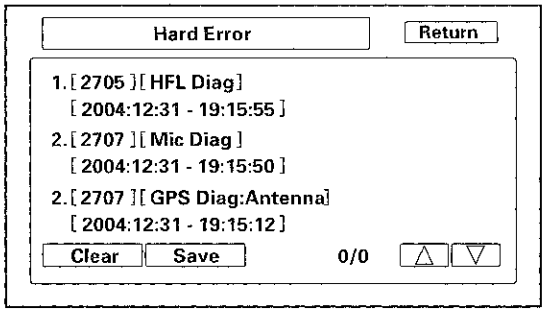

8. Clear the DTCs.
9. Select Return to exit the error history.

Software Error (Soft error) History

Software errors are not available. They are for factory use only.

How to Clear Error History

1. Do the steps in How to check Error History.

2. Select Clear in the error menu.

   NOTE:
   - By selecting Clear, all software and hardware errors stored in history are erased at the same time.
   - Save is for factory use only.

Hard error history is displayed

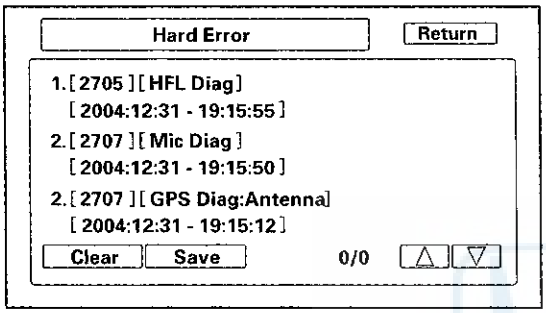

Soft error history is displayed (Soft errors are for factory use only)

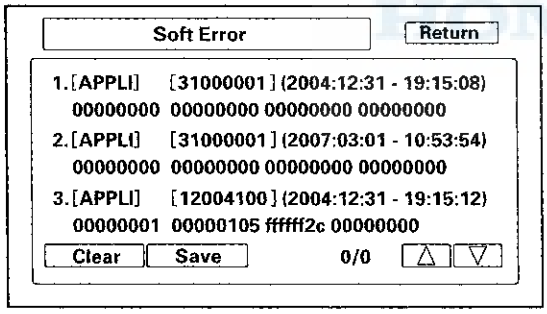

3. After selecting Clear, then selecting Yes, both Hard Error history and Soft Error history are cleared at the same time.

Hard error history clear

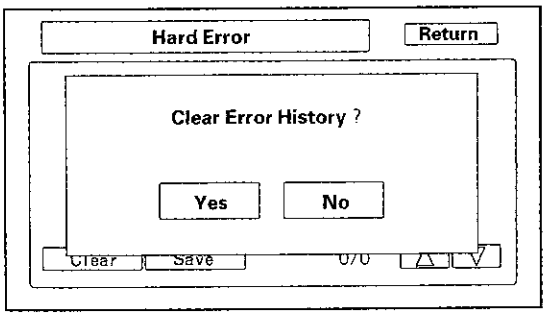

Soft error history clear (Soft errors are for factory use only)

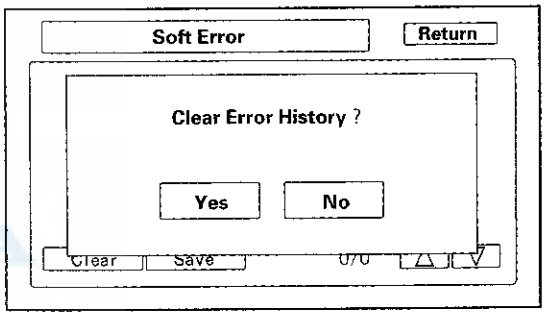

4. Press return to exit.

DTC Troubleshooting Index

DTC	Description	Circuit	Failure Detection	Page	Also Check for
1001	FROM system Info Error	Flash ROM management	Navigation unit internal data error.	(see page 23-295)	Low or weak battery voltage.
1101	Media Bus Send Error	Media condition monitoring	Navigation unit internal media error.	(see page 23-295)	Low or weak battery voltage.
1201	DVD High Temp	DVD drive	Navigation unit temperature above the upper limit. Failure in navigation unit fan circuit.	(see page 23-296)	• Low or weak battery voltage. • High temperature around the navigation unit.
1202	DVD Low Temp	DVD drive	Navigation unit temperature below the lower limit.	(see page 23-296)	• Low or weak battery voltage. • High temperature around the navigation unit.
1301	GPS Antenna Error	GPS Antenna	GPS antenna circuit malfunction.	(see page 23-297)	Low or weak battery voltage.
1302	GPS Receiver Error 1	GPS Receiver	GPS antenna circuit malfunction. Navigation unit internal GPS receiver malfunction.	(see page 23-298)	Low or weak battery voltage.
1303	GPS Receiver Error 2	GPS Receiver	Navigation unit internal GPS receiver malfunction.	(see page 23-299)	Low or weak battery voltage.
1305	Gyro Error 2: ECU Temp xx ℃	Gyro	Navigation unit internal gyro malfunction.	(see page 23-299)	Low or weak battery voltage.
1306	Vehicle Speed Pulse	Vehicle Speed Pulse	VSP circuit malfunction.	(see page 23-300)	Check for F-CAN DTCs.
1307	DVD Read Error	DVD	Scratched/Dirty DVD or navigation unit internal DVD ROM drive.	(see page 23-300)	Low or weak battery voltage.
1402	Audio Error 2	CD	Mechanical malfunction in the CD changer.	(see page 23-301)	Low or weak battery voltage.
1409	Audio Error 9	XM	XM Antenna/Circuit malfunction.	(see page 23-301)	Low or weak battery voltage.
2607	XM Diag	XM	GA-NET Bus circuit malfunction Open/Short. XM antenna circuit malfunction.	(see page 23-302)	
2609	VRAM Diag	ECU VRAM	Navigation unit internal VRAM malfunction.	(see page 23-304)	
2610	DRAM Diag	ECU DRAM	Navigation unit internal DRAM malfunction.	(see page 23-305)	
2701	GPS Diag: Antenna	GPS	GPS antenna malfunction.	(see page 23-305)	
2702	GPS Diag: Receiver in Navi	GPS	GPS antenna malfunction.	(see page 23-306)	
2703	Aircon Diag	Aircon	Communication error between climate control unit and navigation control unit (open/short).	(see page 23-306)	Check for F-CAN DTCs.
2705	HFL Diag	HFL	HandsFreeLink control unit internal malfunction.	(see page 23-309)	Check for F-CAN DTCs.
2706	Gyro Diag: ECU Temp xx ℃	Gyro	Navigation unit internal malfunction.	(see page 23-311)	
2707	Mic Diag	Mic	Mic circuit malfunction Open/Short.	(see page 23-312)	

Symptom Troubleshooting Index

Symptom	Diagnostic procedure	Also check for
Navigation system stays on the GPS initialization screen	System Initialization (see page 23-243)	• Navigation unit • GPS antenna/cable is disconnected or damaged • The wrong color DVD is installed • The DVD is damaged or dirty • Harness/fuses/switches
Vehicle position icon constantly leaves road, moves erratically, or is displayed very far from actual vehicle position	Symptom Troubleshooting (see page 23-319)	• Navigation unit • GPS antenna/cable • PCM (speed and fuel pulses) • Harness/fuses/switches
System always comes up in in-line diagnostic mode	Symptom Troubleshooting (see page 23-322)	
Navigation system will not accept security code	Symptom Troubleshooting (see page 23-328)	The wrong color DVD is installed
Navigation frequently asks for anti-theft code and/or needs GPS initialization	Symptom Troubleshooting (see page 23-325)	• Loss of voltage or poor ground (G504, G505) • Navigation unit • Low battery voltage • Harness/fuses/switches
GPS icon is white or not shown	Symptom Troubleshooting (see page 23-316)	• Navigation unit • Aftermarket accessories connected to the system • The wrong color DVD is installed • The DVD is damaged or dirty • GPS antenna/cable • Harness/fuses/switches
Vehicle icon wanders across the map when driving (does not follow a displayed road) or map or vehicle ICON spins	Symptom Troubleshooting (see page 23-320)	• Navigation unit • GPS antenna/cable • PCM (speed signal)
No picture is displayed	Symptom Troubleshooting (see page 23-313)	• Navigation unit • The wrong color DVD is installed • The DVD is damaged or dirty • Harness/fuses/switches
Picture has lines/rolls/other issues or is an odd color	Symptom Troubleshooting (see page 23-314)	• Navigation unit • The wrong color DVD is installed • The DVD is damaged or dirty • Aftermarket accessories connected to the system • Harness/fuses/switches
Display day/night mode does not work or does not work properly	• If you use the display mode button, the auto day/night function is disabled until you turn the ignition switch to ON (II) • Symptom Troubleshooting (see page 23-323)	• Display brightness set to High in day or night mode • Gauge control module • The wrong color DVD is installed • The DVD is damaged or dirty • Harness/fuses/switches
System locks up or freezes constantly	Symptom Troubleshooting (see page 23-323)	• Navigation unit • The wrong color DVD is installed • The DVD is damaged or dirty • Harness/fuses/switches

(cont'd)

Symptom Troubleshooting Index (cont'd)

Symptom	Diagnostic procedure	Also check for
Voice guidance cannot be heard, is broken up, or there is static	Symptom Troubleshooting (see page 23-316)	• Volume or voice feedback setting (see Owner's manual) • Navigation unit • Stereo amplifier • Harness/fuses/switches
Voice control does not work/ respond	Symptom Troubleshooting (see page 23-317)	• Navigation unit • The wrong color DVD is installed • The DVD is damaged or dirty • Microphone harness/switches HandsFreeLink control unit
Navigation cannot control HVAC by voice command	Symptom Troubleshooting (see page 23-321)	• The wrong color DVD is installed • Harness/fuses/switches • Wrong navigation unit (model code)
Navigation cannot control XM radio	Symptom Troubleshooting (see page 23-325)	Low or weak battery
Navigation cannot control audio system	Symptom Troubleshooting (see page 23-324)	The wrong color DVD is installed
Navigation display buttons do not work or respond properly	Symptom Troubleshooting (see page 23-315)	• Navigation unit • Open/short between the XM receiver or the GA-Net bus • The wrong color DVD is installed • The DVD is damaged or dirty
Today's Destinations button is dim and not selectable in the Enter destination by screen (grayed-out)	The customer has not entered a group of locations for Today's Destinations. This is normal. The button is only selectable if the customer is using this function	See Owner's Manual
Some set-up and information functions of the navigation system are grayed-out and do not work	Customer did not select OK from Disclaimer screen. Refer to System Function Diagram (see page 23-264)	
Previous Destinations button is dim and not selectable in the Enter destination by screen (grayed-out)	The vehicle may be new, or the customer deleted the destination. Enter a destination, and allow the system to route to it. After the trip, the Previous Distinations button will be selectable	
Address cannot be found or system gives poor routing	• Verify proper operation and system limitations using the owner's manual • See Answering customer question about Navigation coverage in general troubleshooting • Refer to Database limitation in the navigation system manual to report database errors	• Database limitations (address not in database) • The wrong color DVD is installed

Symptom	Diagnostic procedure	Also check for
OPEN/CLOSE function of the display does not work	Symptom Troubleshooting (see page 23-326)	• Navigation unit • Harness
Navigation display will not close	Symptom Troubleshooting (see page 23-327)	• Navigation unit • Harness
Navigation display does not open or opens part way	Symptom Troubleshooting (see page 23-327)	• Navigation unit • Harness
PC card will not play/card icon on audio screen cannot be selected	Symptom Troubleshooting (see page 23-210)	Navigation unit
Navigation display stays on with ignition switch in LOCK (0)	Symptom Troubleshooting (see page 23-324)	• Harness/fuses/switches • Aftermarket accessories connected to the system
DVD read error messages	Symptom Troubleshooting (see page 23-321)	• Navigation unit • The wrong color DVD is installed • Damaged DVD
Navigation system will not go beyond the disclaimer screen and displays the OK button	See navigation display buttons do not work or respond properly	• The wrong color DVD is installed • Scratched or damaged DVD • Navigation unit
The navigation anti-theft code card is lost or missing	See anti-theft feature (see page 23-241)	
The vehicle icon lags behind when the vehicle turns	See self-inertial navigation limitations (see page 23-241)	• Aftermarket accessories connected to the system • GPS antenna/cable
Navigation screen is darker than normal or takes time to brighten when it is cold	See LCD unit limitations (see page 23-242)	
The navigation clock is off by 1 to 3 hours after replacing the navigation unit	See service precautions (see page 23-243)	• Perform map matching (see page 23-244) • GPS antenna/cable • Check and adjust the clock settings
A new navigation DVD is needed	See obtaining a navigation DVD (see page 23-244)	
Time is not correct	Reset Time Adjustment in set-up	The wrong colored DVD or version is installed
The DVD is scratched or dirty	See DVD Handling and Cleaning (see page 23-245)	Navigation unit
The wrong DVD was installed and now the system does not function properly	See Precaution customer Sneak Previews (see page 23-247)	• Install the correct version DVD • Check any official Honda service website for more service information about the navigation system.
A specific city cannot be found	See how to answer customer questions about navigation coverage (see page 23-247)	• The DVD is scratched or dirty • Refer to Database limitation limitation in the navigation system manual to report database errors
The Acura Globe Screen (not the Honda Globe Screen) appears every time the vehicle is started	Symptom troubleshooting (see page 23-329)	Also see the symptom The wrong DVD was installed and now the system does not function properly

Navigation System ('09 models)

System Description

Overview

The navigation system is a highly sophisticated, hybrid locating system.

The navigation unit uses global positioning system (GPS) satellite signals, internal yaw and vehicle speed inputs, and a map database to show where the vehicle is and to help guide you to a desired destination.

The navigation unit's GPS receiver receives signals from the GPS, a network of 24 satellites in orbit around the earth. By receiving signals from several of these satellites, the navigation system can determine the latitude, longitude, and elevation of the vehicle.

Signals from the system's yaw rate sensor (inside the navigation unit) detects turns, and the PCM vehicle speed pulse (VSP) and reverse signal enable the system to keep track of the vehicle's speed and direction of travel. The advantage of this hybrid system is that the system can track your position if either the GPS signal or the vehicle speed signal is missing. For instance, when in a tunnel (no GPS), the speed signal is used to update your position on the map. Alternately, while the vehicle is being transported on a ferry, GPS signals can show the vehicle position on the map as it crosses the water.

The navigation system uses the location, direction, and speed information to display the appropriate map and calculate a route to the destination entered. As you drive to a destination, the system provides both visual and audio guidance. Audio guidance is sent to the audio unit, and an RGB graphics color signal is sent to the navigation display.

This navigation system also has voice recognition that allows voice control of most of the navigation, and audio functions. The voice control switches (navigation TALK and navigation BACK buttons on the steering wheel) activate the voice control system. The microphone on the ceiling receives your voice commands. For more information on this feature, consult the navigation owner's guide.

The illumination signal is used by the navigation unit to automatically switch the display mode between the Night and Day display modes. When the headlights are on, the dash brightness control setting full brightness overrides the Night display mode, and allows a daytime navigation display with the lights on.

When the navigation system is giving voice guidance commands, the front speakers are muted. When the voice control system is being used (navigation TALK button pressed), all of the speakers are muted.

The internal GA-Net II bus passes information back and forth between the navigation display, the navigation unit, and the audio system components. The information passed on this bus are touch button commands, audio muting signal, audio (radio and XM), and any open in these bus lines can affect the navigation system or other audio accessory operation.

The clock on the navigation display is set and maintained by the navigation unit. The time is automatically adjusted for daylight savings, and time zone changes while driving. The time can be adjusted in setup.

Additional information is available about the navigation components following the System Diagram. A glossary of terms that are used throughout this section follows the detailed information.

The Navigation System Manual in the glove box covers all of the system functions and settings. Use this as a resource when evaluating a customer concern.

The Comm.Bus connects the HandsFreeLink control unit. If a POI phone number is available, the navigation unit sends the phone number to the HandsFreeLink control unit for dialing.

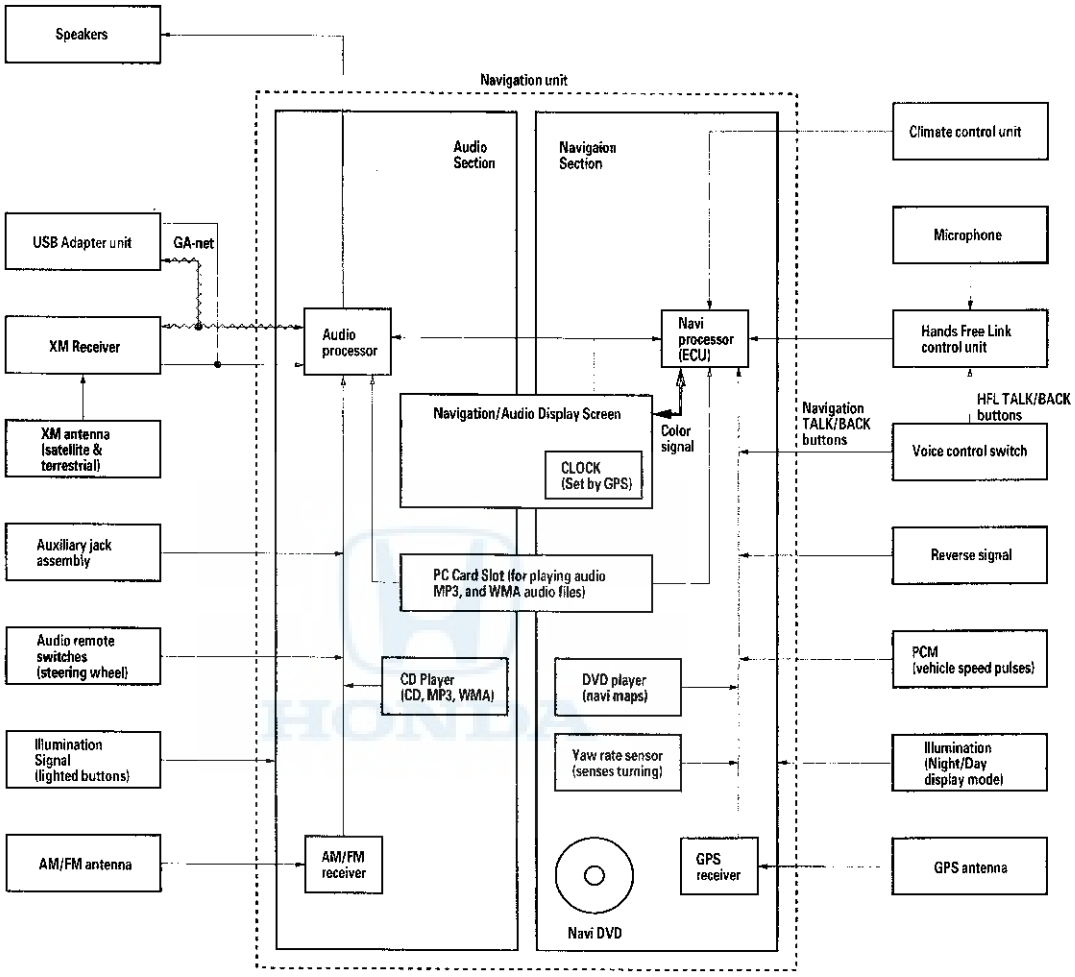
Speakers
Navigation unit
Audio Section
Navigation Section
Climate control unit
USB Adapter unit
GA-net
Microphone
XM Receiver
Audio processor
Navi processor (ECU)
Hands Free Link control unit
Navigation/Audio Display Screen
Color signal
Navigation TALK/BACK buttons
HFL TALK/BACK buttons
XM antenna (satellite & terrestrial)
CLOCK (Set by GPS)
Voice control switch
Auxiliary jack assembly
PC Card Slot (for playing audio MP3, and WMA audio files)
Reverse signal
Audio remote switches (steering wheel)
CD Player (CD, MP3, WMA)
DVD player (navi maps)
PCM (vehicle speed pulses)
Illumination Signal (lighted buttons)
Yaw rate sensor (senses turning)
Illumination (Night/Day display mode)
AM/FM antenna
AM/FM receiver
GPS receiver
GPS antenna
Navi DVD

(cont'd)

System Description (cont'd)

Navigation Function

The navigation system is composed of the navigation unit, the PCM (vehicle speed signal), the GPS antenna, microphone, voice control switch, XM receiver, and the climate control unit.
These units communicate with each other on the GA-Net bus.

Function Diagram

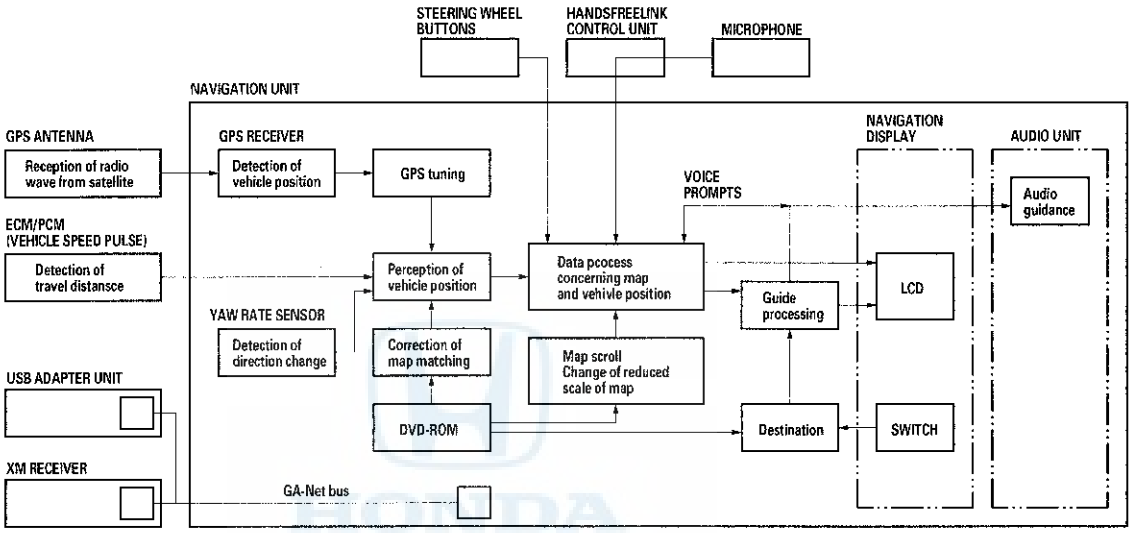

Vehicle Speed Pulse

The vehicle speed pulse is sent by the PCM. The PCM receives a signal from the output shaft (countershaft) speed sensor, then it processes the signal and transmits it to the speedometer and other systems.

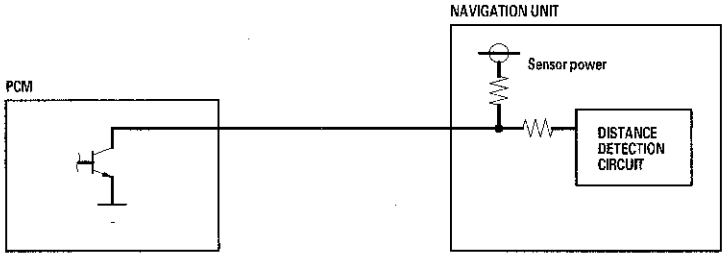

GA-Net Bus Configuration

The GA-Net bus passes audio and navigation commands throughout the navigation and audio components. These commands include audio/XM selections by voice, and XM station and music title names. Because the entire bus is daisy chained between components (see diagram below), any open or short in the GA-Net bus harness will cause any or all of these functions to become inoperative. The addition of any factory audio accessory must maintain the continuity of the GA-Net bus by installing the Y cable included with the accessory kit.

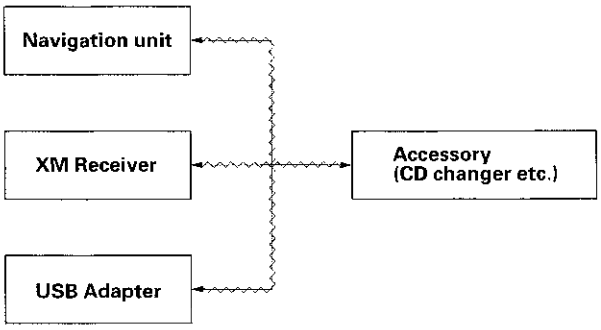

Muting Signal Logic

The audio muting logic is orchestrated by the audio unit. The audio unit determines what audio source has priority to use the speakers.

The priority of the audio sources is as follows:
HandsFreeLink has the highest priority, followed by, navigation, and finally the radio/CD player. The priority is passed by HandsFreeLink to the navigation unit by dedicated mute wires. The navigation mute signal is passed to the stereo amplifier.

The navigation unit temporarily disables the voice control buttons, but allows guidance to be heard.

When the navigation system sends out a voice route guidance command, the rear speakers are muted, and the navigation voice is heard in the front speakers.

When the navigation voice control system and HandsFreeLink is in use, the rear speakers are muted, and the navigation voice prompts are heard from the front speakers.

(cont'd)

System Description (cont'd)

Yaw Rate Sensor
The yaw rate sensor (located in the navigation unit) detects the direction change (angular speed) of the vehicle. The sensor is an oscillation gyro built into the navigation unit.

Sensor Element Structure
The sensor element is shaped like a tuning fork, and it consists of the piezoelectric parts, the metal block, and the support pin. There are four piezoelectric parts: one to drive the oscillators, one to monitor and maintain the oscillation at a regular frequency, and two to detect angular velocity. The two oscillators, which have a 90-degree twist in the center, are connected at the bottom by the metal block and supported by the support pin. A detection piezoelectric part is attached to the top of each oscillator. The driving piezoelectric part is attached to the bottom of one oscillator, and the monitoring piezoelectric part is attached to the bottom of the other oscillator.

Oscillation Gyro Principles
The piezoelectric parts have electric/mechanical transfer characteristics. They bend vertically when voltage is applied to both sides of the parts, and voltage is generated between both sides of the piezoelectric parts when they are bent by an external force. The oscillation gyro functions by utilizing this characteristic of the piezoelectric parts and Coriolis force. (Coriolis force deflects moving objects as a result of the earth's rotation.) In the oscillation gyro, this force moves the sensor element when angular velocity is applied.

Operation
1. The driving piezoelectric part oscillates the oscillator by repeatedly bending and returning when an AC voltage of 6 kHz is applied to the part, The monitoring-side oscillator resonates because it is connected to the driving-side oscillator by the metal block.
2. The monitoring piezoelectric part bends in proportion to the oscillation and outputs voltage (the monitor signal). The navigation unit control circuit controls the drive signal to stabilize the monitor signal.
3. When the vehicle is stopped, the detecting piezoelectric parts oscillate right and left with the oscillators, but no signal is output because the parts are not bent (no angular force).
4. When the vehicle turns to the right, the sensor element moves in a circular motion with the right oscillator bending forward and the left oscillator bending rearward. The amount of forward/rearward bend varies according to the angular velocity of the vehicle.
5. The detecting piezoelectric parts output voltage (the yaw rate signal) according to the amount of bend. The amount of vehicle direction change is determined by measuring this voltage.

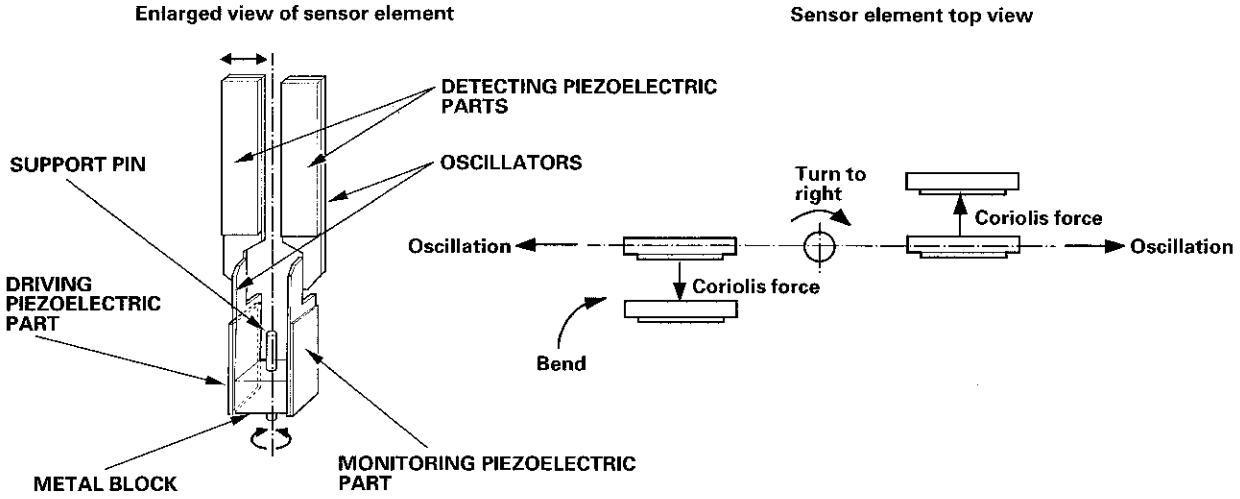

Global Positioning System (GPS)
The global positioning system (GPS) enables the navigation system to determine the current position of the vehicle by using the signals transmitted from the satellites in orbit around the earth. The satellites transmit the satellite identification signal, orbit information, transmission time signal, and other information. When the GPS receiver receives a signal from four or more satellites simultaneously, it calculates the current position of the vehicle based on the distance to each satellite and the satellite's positions in its respective orbit.

Position Detection Image with GPS Satellite

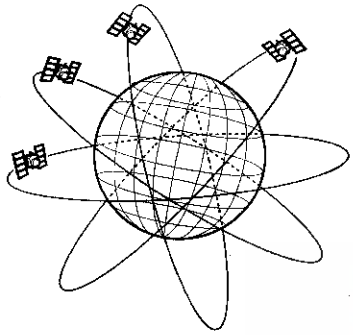

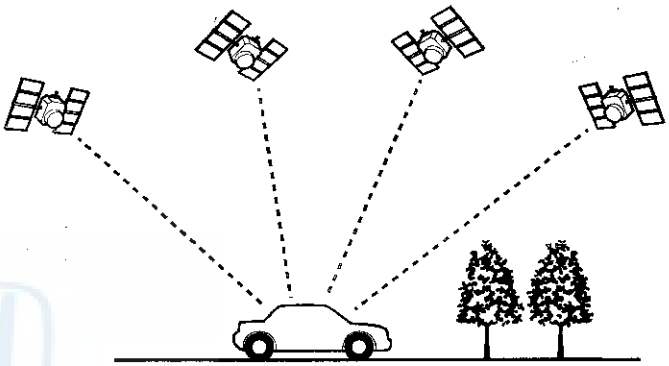

Precision of GPS
The precision of the GPS varies according to the number of satellites from which signals are received and the view of the sky. The accuracy is indicated by the color and shape of the GPS icon shown on the display.

GPS ICON COLOR	NUMBER OF SATELLITES	CONDITION	DESCRIPTION
No GPS icon	None	Faulty reception	The GPS can't be utilized due to a faulty GPS receiver, open in the wire, or other fault or interference.
White GPS icon	2 or less	Impossible to detect vehicle position	GPS function is normal. The satellite signals received by the GPS are too few to detect the vehicle position.
White GPS icon	3	Vehicle position detectable in 2 dimensions	The longitude and latitude of the vehicle position can be detected. (Less precise than detection in three dimensions)
Green GPS icon	4 or more	Vehicle position detectable in 3 dimensions (elevation displayed)	The longitude, latitude and the altitude of the vehicle position can be detected. (More precise than detection in two dimensions)

GPS Antenna
The GPS antenna amplifies and transmits the signals received from the satellites to the GPS receiver.

GPS Receiver and Clock
The GPS receiver is built into the navigation unit. It calculates the vehicle position by receiving the signal from the GPS antenna. The current time vehicle position and signal reception condition is transmitted from the GPS receiver to the navigation unit to adjust vehicle position.

(cont'd)

System Description (cont'd)

Navigation Unit
The navigation unit calculates the vehicle position and guides you to the destination. The unit performs map matching correction, GPS correction, and distance tuning. It also controls the menu functions and the DVD-ROM drive, and interprets voice commands. With control of all these items, the navigation unit makes the navigation picture signal, then it transmits the signal to the navigation display and audio driving instructions to the audio unit.

Calculation of Vehicle Position
The navigation unit calculates the vehicle position (the driving direction and the current position) by receiving the directional change signals from the yaw rate sensor and the travel distance signals from the PCMs vehicle speed pulse (VSP) signal.

Map Matching Tuning
The map matching tuning is accomplished by indicating the vehicle position on the roads on the map. The map data transmitted from the DVD-ROM is checked against the vehicle position data, and the vehicle position is indicated on the nearest road. Map matching tuning does not occur when the vehicle travels on a road not shown on the map, or when the vehicle position is far away from a road on the map.

GPS Tuning
The GPS tuning is accomplished by indicating the vehicle position as the GPS's vehicle position. The navigation unit compares its calculated vehicle position data with the GPS vehicle position data. If there is large difference between the two, the indicated vehicle position is adjusted to the GPS vehicle position.

Distance Tuning
The distance tuning reduces the difference between the travel distance signal from the VSP and the distance data on the map. The navigation unit compares its calculated vehicle position data with the GPS vehicle position data. The navigation unit then decreases the tuning value when the vehicle position is always ahead of the GPS vehicle position, and it increases the tuning value when the vehicle position is always behind the GPS vehicle position.

Route Guidance
The navigation unit can calculate different routes to a selected destination. You have five options:

- Direct Route — Calculate a route that is the most direct.
- Easy Route — Calculate a route that minimizes the number of turns needed.
- Minimize Freeways — Calculate a route that avoids freeway travel. If that is not possible, keep the amount of freeway travel to a minimum.
- Minimize Toll Roads — Calculate a route that avoids, or minimizes travel on toll roads.
- Maximize Freeways — Calculate a route that uses freeways as much as possible.

Audio Guidance
The navigation unit transmits audio driving instructions before entering an intersection or passing a junction.
The audio instructions come through the audio unit to the front speakers.

NOTE: The front speakers are muted whenever the navigation system is giving guidance commands, and all of the speakers are muted when the voice control system is being used.

DVD-ROM
The map data (including all scale rates) is stored in the DVD-ROM. The map data includes:

- Road distances, road widths, speed limits, traffic regulations, passing time at junction, distances to junctions, and the driving instructions for audio guidance.
- Latitude and longitude GPS.

Audio Unit (Built in the navigation unit)
The audio unit receives the audio driving instructions from the navigation unit, and transmits the instructions through the front speakers even when the audio system is in use.

Navigation Display
The navigation display uses liquid crystal display (LCD). The LCD is a 6.5-inch-diagonal, thin film transistor (TFT), stripe type with 65,536 color, The color film and fluorescent light are laid out on the back of the liquid crystal film. The touch sensor on the front of the LCD consists of a touch sensitive resistive membrane with an infinite number of possible touch locations.

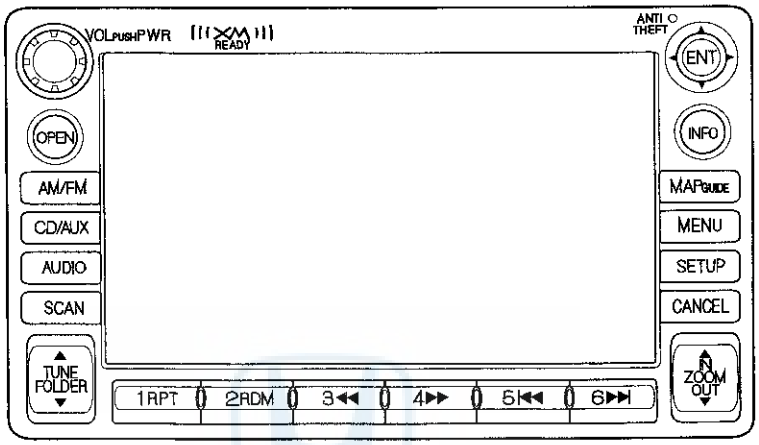

Microphone
The microphone (on the ceiling, near the front map light) receives voice commands and transmits them to the navigation unit for interpretation.

Navigation TALK Button
Activates the voice control system in the navigation unit to accept voice commands.

Navigation BACK Button
Returns the display to the previous screen (similar function as the CANCEL button).

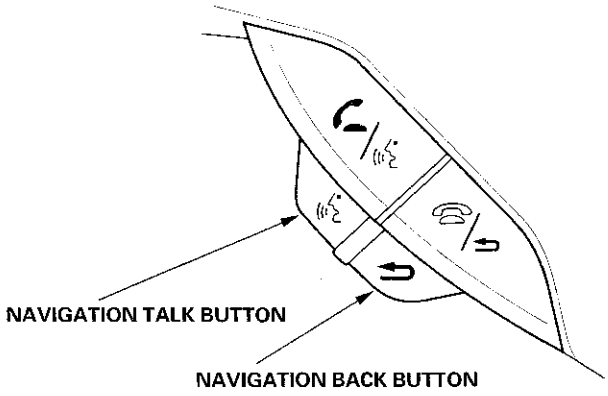

(cont'd)

System Description (cont'd)

Glossary
The following is a glossary of terms pertaining to the Voice Recognition Navigation System.

Item	Definition
Active noise cancellation (ANC)	The active noise cancellation system cancels some of the vehicle noise. This occurs in the 1,500—2,400 rpm range. Microphones detect the low frequency sound, and the system outputs a canceling sound from the audio speaker.
Address Book	The HFL system can import a copy of the phone book from and approved HFL compatible phone and display the imported phone book on the navigation screen as the address book. See the Owner's Manual for more information.
B-CAN	Body CAN Bus (see CAN)
Bread-crumbs (White dots)	Off road tracking dots that can be followed on the map to retrace your route back to a mapped (digitized) road. This function can be turned on/off in Setup screen 1.
CAN	Controller Area Network. This communication network allows processors in the vehicle to send/receive information. The fuel pulses used by the MID trip computer are received from the PCM using the F-CAN (Fast Controller Area Network) bus.
CPU	Central Processing Unit. The main device with in the navigation unit that coordinates the rest of the electronic functions.
CSS	Countershaft (Output) Speed Sensor. This sensor reads the output shaft speed at the transmission and provides a speed pulse to the PCM.
Database	This consists of the Map data, and the POI (Points Of Interest) data stored on the DVD.
DBW	Drive By Wire. Allows electrical control of the throttle without the need of a mechanical linkage.
DCA	Detailed Coverage Area. Main metropolitan areas in the Lower 48 states, and Canada are mapped to this level. See the navigation system manual for a list of these areas.
DTC	Diagnostic Trouble Codes. Use the PGM Tester, or HDS tablet to obtain, and troubleshoot the cause of these codes.
Dead reckoning	The use of the speed signal, and yaw rate sensor to position the vehicle on the map even when tall buildings, or driving in a tunnel obscures the GPS signal.
Digitized road	A road that appears on the navigation screen. The road name appears at the bottom of the navigation screen. If the user drives off road, the navigation system displays Not on a digitized road, and after 1/2mile, the bread-crumbs appear.
Disclaimer Screen	Screen containing cautionary information. It is meant to be read carefully, and acknowledged by the customer when using the navigation system.
DVD or DVD-ROM	Digital Versatile Disk. The navigation program and database resides on this disk. See the Navigation Owner's Manual for information on how to order a replacement or an update DVD.
ECM	Engine Control Module. Typically referred to as the ECM.
FAQ	Frequently Asked Questions. See the navigation system manual for a list of the customer FAQs, and troubleshooting information.
F-CAN	Fast CAN Bus (see CAN)
GA-NET	The GA-NET allows the audio unit to communicate with all the audio and navigation components in a vehicle. If there is an open in the GA-NET, components or the entire audio and navigation system may appear inoperative.
GPS	Global Positioning System. A network of 24 satellites in orbit around the earth. The navigation system can simultaneously receive signals from up to 12 satellites to accurately position the vehicle on the map.
HDS	Honda Diagnostic System. A hand held tablet PC used for diagnosing vehicle problems. This device can be used to obtain DTC codes for diagnosis of the navigation system and CAN related problems.
HFL	HandsFreeLink uses Bluetooth technology as a wireless link between it and an approved Bluetooth compatible cell phone. See the vehicle Owner's manual or Quick Start Guide for more information.
HIP (AcuraLink)	Honda Information Platform (see AcuraLink)
H/U	Head Unit. The audio unit in the dash.
Initialization	This refers to the period needed to re-acquire the GPS satellite orbital information whenever the navigation system power has been disconnected. This can take from 10 to 45 minutes.
Interface Dial	This control device consists of a rotating knob and the buttons surrounding it. This device allows control of the navigation, audio, and climate functions displayed on the screen.
Jog Dial	See interface dial.

Item	Definition
LCD	Liquid Crystal Display (the navigation screen)
Map matching	The received GPS information allows the navigation system to position the vehicle on the map. Map matching has occurred if the map screen displays the current street name in the bottom-shaded area.
Mic	Abbreviation for the microphone used for receiving voice commands. It is located near the map light in the ceiling. The ANC circuit may also use it to check its tuning.
MID	Multi-Information Display
MW	Maneuver Window. While on-route to a destination, this window displays information about the next maneuver.
Navi	Abbreviation for the Navigation System.
Off-road tracking	See bread-crumbs.
Off route	This occurs when the user leaves mapped roads. Off road tracking dots (bread-crumbs) are displayed if the option is enabled in the setup menu. The user can use them to return to a mapped road. The bottom of the navigation screen displays not on a digitized road.
Outlying areas	These are rural areas that typically have only their main roads mapped. All other roads are shown in light brown for reference only, since they have not been verified.
Paired	Linking your cell phone to the HFL.
PC Card Slot	The PC Card (PCMCIA, type II) slot is for factory use only. Make sure that the sliding door is closed at all times, if opened, an error message is displayed on the screen.
PCM	Powertrain Control Module. This unit supplies the navigation system speed signal, also referred to as PCM.
PCMCIA	A computer industry defined term referring to the PC Card slot standard.
PIN	Personal Identification Number, a random 4 digit number created by the customer to protect personal information.
POI	Point Of Interest. These are the businesses, schools, etc. found under the places option on the main menu.
Polygon	Colored areas on the map screen denoting parks, schools, etc. See the Navigation System Manual Driving to Your Destination for a list of the assigned colors.
QWERTY	Keyboard layout resembling the typewriter keys. The keyboard layout can be changed to an alphabetical layout in the Setup mode.
SCS connector	The service check signal 2-pin connector used to put the navigation system into the diagnostic mode.
Security code	Code needed to activate the navigation system. You can get the security code from the iN by entering the navigation unit serial number. You can find the serial number on the diagnostic screens (unit check, Navi ECU), or on the underside of the navigation unit.
Tuning	A continual update of internal navigation system scaling factors. See the individual sensor tuning discussions under either System Description, or System Diagnostic Mode (see page 23-274).
Unverified streets	These streets have not been verified for turn restrictions, one-way, etc. They appear light brown on the map. You can enter address destinations in these areas, but depending on your Unverified Routing choice in setup, voice guidance may end at the last verified street closest to your destination.
USB	Universal Serial Bus. The USB is used for playing the compressed audio files (MP3, WMA, and AAC) on the external device through the audio unit.
Verified streets	These streets consist of the detailed metropolitan coverage areas, and all other inter-town connection roads. These roads are shown in black or red on the map. (Interstates are red)
VP	Vehicle Position. When in map mode, this circular icon shows the vehicle position on the map.
VR	Voice Recognition. This allows voice control of many of the navigation functions. The hardware consists of the microphone, voice control switch (navigation TALK/BACK buttons), and the center speaker. See the overview for more information.
VSP	Vehicle Speed Pulse. This pulse signal coming from the PCM (via the CSS) is used to update the Vehicle position on the map. These pulses do not indicate direction (forward or backward). When in reverse, the navigation receives a signal and directs the VP to move backwards on the map.
XM	This device receives information from the XM satellites and passes XM audio information to the audio unit. In addition, traffic information is sent to the navigation unit.
Yaw sensor	This device is located in the navigation system control unit and senses the side-to-side twisting force generated when the vehicle turns. See a detailed description of how this sensor works in system description.

(cont'd)

System Description (cont'd)

Diagnostic System Diagram
This diagram below shows all of the navigation diagnostic features available for system troubleshooting. The diagram starts at the center, and works outward in layers.

Access to the diagnostic features begins by starting the vehicle. This is necessary so the system can check the other systems connected by various busses. After starting the vehicle you can enter the diagnostic mode either by pressing and holding MENU, MAP/GUIDE, and CANCEL.

The main menu screen allows 2 checking modes - one automatic, and one manual:

- The automatic diagnostic check starts when you select SELF DIAGNOSTIC MODE. The system runs for several seconds, and reports any issues with Red icons. Rotate the interface dial and select the icon you wish obtain the problem details.
- The manual diagnostic check is selected from the main menu by selecting DETAIL INFORMATION AND SETTING. The traditional diagnostic menu is displayed. This allows you to obtain additional details as instructed in the troubleshooting procedures.

NOTE: Do not clear or change settings unless specified by either the Service Manual troubleshooting procedures or by the factory. Otherwise, you may accidentally delete customer information, or remove the latest flash software version installed by the factory.

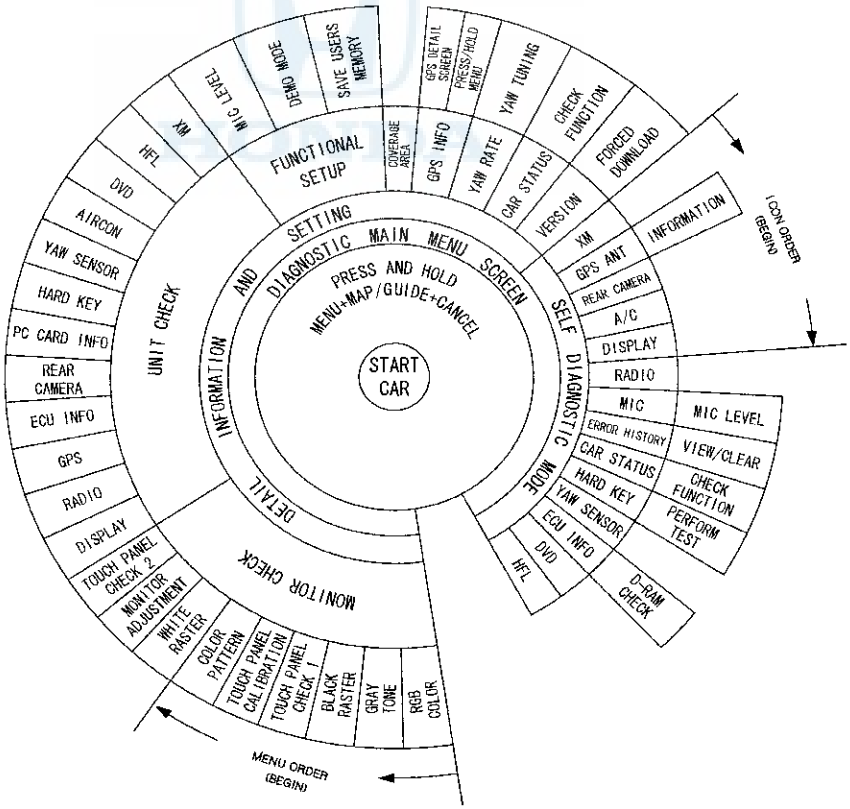

Navigation System Connector Location

NOTE: Refer to the audio section for the connector G inputs and outputs (see page 23-158).

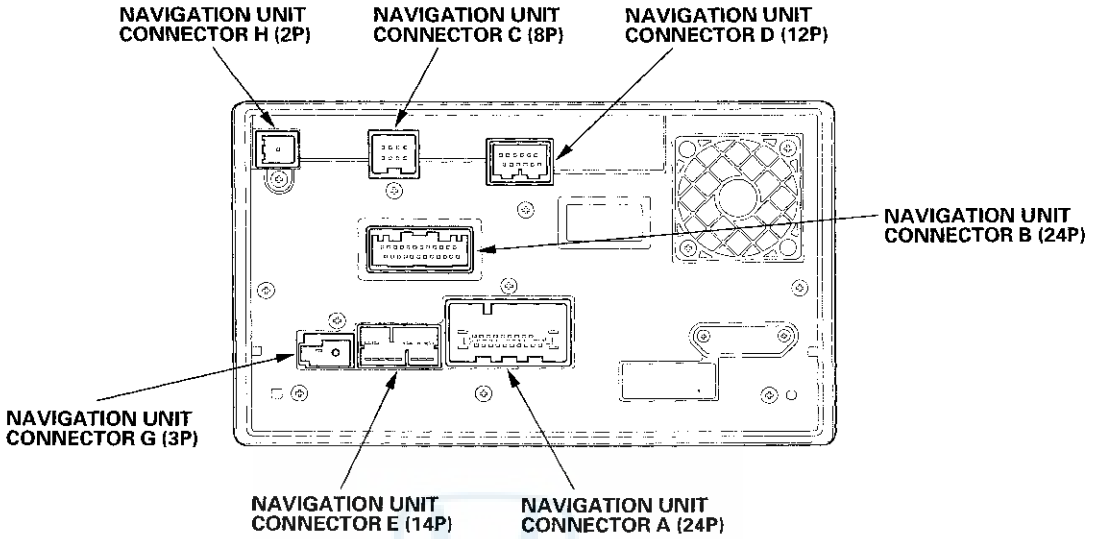

NAVIGATION UNIT CONNECTOR A (24P)

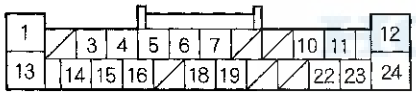

Wire side of female terminals

NAVIGATION UNIT CONNECTOR B (24P)

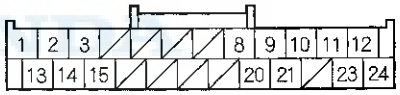

Wire side of female terminals

NAVIGATION UNIT CONNECTOR C (8P)

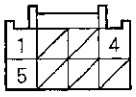

Wire side of female terminals

NAVIGATION UNIT CONNECTOR D (12P)

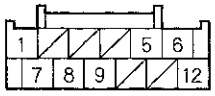

Wire side of female terminals

NAVIGATION UNIT CONNECTOR E (14P)

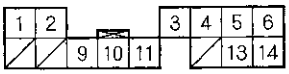

Wire side of female terminals

NAVIGATION UNIT CONNECTOR G (3P)

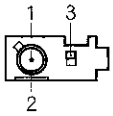

Terminal side of female terminals

NAVIGATION UNIT CONNECTOR H (2P)

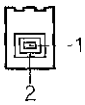

Terminal side of female terminals

(cont'd)

System Description (cont'd)

Navigation Unit Inputs and Outputs for Connector A (24P)

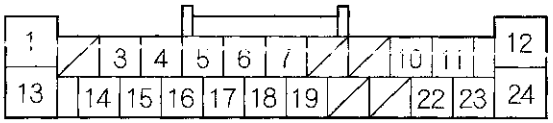

Wire side of female terminals

Navigation Unit Connector A (24P)

Terminal Number	Wire Color	Terminal Name	Description	Voltage (about)	Symptom
1	RED	ILL (−)	Ground for illumination light	With full dash lights brightness, 0 V	If open: When brightness = Auto, night mode for the display is inoperative when lights on. If short to ground: No change to display.
12	BLK	RADIO GND (Ground)	Ground for display unit	0 V	If open: No change to display. If short to ground: No change to display.
13	GRY	ILL (+) (Illumination positive)	Parking light on signal from dash and console lights	Light on = battery voltage, Lights off = 0 V	If open: When brightness = Auto, night mode for the display is inoperative when lights on. If short to ground: Blows fuse No. 14 (7.5 A) in under-dash fuse/relay box.
15	BLU	VSP (Vehicle speed pulse)	Vehicle speed pulse signal from PCM	Pulses 0—5 V: Average 2.5 V, when moving	If open: No vehicle speed pulses. Diagnostic screen Car Status, VSP Navi = 0. If short to ground: No vehicle speed pulses. Diagnostic screen Car Status, VSP Navi = 0.
24	WHT	+B (+B power source)	Continuous power source	Battery voltage	If open: Screen completely off (no backlight visible). If short to ground: Blows fuse No. 23 (10 A) in the under-hood fuse/relay box.

Navigation Unit Inputs and Outputs for Connector B (24P)

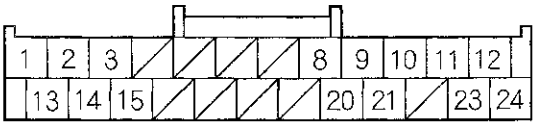

Wire side of female terminals

Navigation Unit Connector B (24P)

Terminal Number	Wire Color	Terminal Name	Description	Voltage (about)	Symptom
10	GRY*	SH HFL (Shield HFL)	Shield for terminal No. 11, 12, 23, 24	——	——
11	GRN	HFL COMM2 (HFL communication 2)	Communication signal for HFL	——	HFL icon in Navi System Link changes between red and green
12	WHT	HFL COMM4 (HFL communication 4)	Communication signal for HFL	——	Solid red HFL icon in Navi System Link
23	BLK	HFL COMM1 (HFL communication 1)	Communication signal for HFL	——	HFL icon in Navi System Link changes between red and green
24	RED	HFL COMM3 (HFL communication 3)	Communication signal for HFL	——	Solid red HFL icon in Navi System Link

*: The shielded wires have a heat-shrunk tube insulating the outside of the wire. The color of the insulating tube, typically black or dark gray, may not match the color of the wire listed on the schematic.

HONDA

(cont'd)

System Description (cont'd)

Navigation Unit Inputs and Outputs for Connector C (8P)

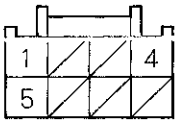

Wire side of female terminals

Navigation Unit Connector C (8P)

Terminal Number	Wire Color	Terminal Name	Description	Voltage (about)	Symptom
1	WHT	+B BACK UP	Continuous power source	Battery voltage	If open: Display picture goes out (display back light still on). NOTE: System will reboot to enter code screen. If short to ground: Blows fuse No. 23 (10 A) in the under-dash fuse/relay box.
4	BLK	GND	Ground for navigation unit	0 V	If open: No effect on system. If short to ground: No effect on system.
5	BRN	BACK LT—	Reverse signal of select laver from Multiplex integrated Control unit	In reverse, battery voltage: Otherwise 0 V	If open: Navigation never sees the reverse signal and back-up camera does not come on when in reverse. Diagnostic screen Car Status, Back = 0. If short to ground: Blows fuse No. 10 (7.5 A) in the under-dash fuse/relay box.

HONDA

Navigation Unit Inputs and Outputs for Connector D (12P)

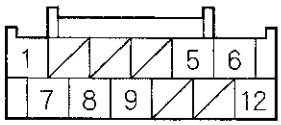

Wire side of female terminals

Navigation Unit Connector D (12P)

Terminal Number	Wire Color	Terminal Name	Description	Voltage (about)	Symptom
1	GRN	NAVI GUIDE	Steering wheel switch output	4—5 V (navigation TALK button pressed) 2.5—3 V (navigation BACK button pressed)	If open: Steering wheel navigation TALK, and navigation BACK buttons do not work. If short to ground: Steering wheel navigation TALK, and navigation BACK buttons do not work.
5	YEL	AC SI	A/C input signal	0-battery voltage pulses	If open: voice control does not work. If short to ground: Voice control does not work.
6	RED	AC SO	A/C output signal	0-battery voltage pulses	If open: A/C voice control does not work. If short to ground: A/C voice control does not work.
7	BRN	MIC GND	Ground for microphone signal	0 V	If open: No microphone signal shown in diagnostics: Navi System Link and Functional Set up Mic Level. If short to ground: No effect on voice recognition.
8	YEL	MIC SIG+	Microphone output signal positive	4—5 V (with navigation TALK button pressed)	If open: No microphone signal shown in diagnostic screens: Navi System Link and Functional Setup Mic Level. If short to ground: No microphone signal shown in diagnostic screens: Navi System Link and Functional Setup Mic Level.
9	GRY*	MIC SHIELD	Shield for terminal No. 1, 2, 5	0 V	If open: No effect on voice recognition. If short to ground: No effect on voice recognition.
12	BLU	AC CK	Time set sync signal	0-battery voltage pulses	If open: A/C voice control does not work. If short to ground: A/C voice control does not work.

*: The shielded wires have a heat-shrunk tube insulating the outside of the wire. The color of the insulating tube, typically black or dark gray, may not match the color of the wire listed on the schematic.

(cont'd)

System Description (cont'd)

Navigation Unit Inputs and Outputs for Connector H (2P)

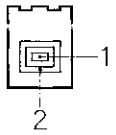

Terminal side of female terminals

Navigation Unit Connector H (2P)

Terminal Number	Wire Color	Terminal Name	Description	Voltage (about)	Symptom
1	———	GPS	GPS signal (5 V in, GPS signal out)	5 V	If open: GPS icon on screen is white, system links screen ANT shows NG. If short to ground: GPS icon on screen is white, system links screen ANT shows NG.
2	———	GPS SH	Shield for terminal No. 1	0 V	If open: GPS icon on screen is white, system links screen ANT shows NG. If short to ground: No effect on system.

HONDA

Circuit Diagram

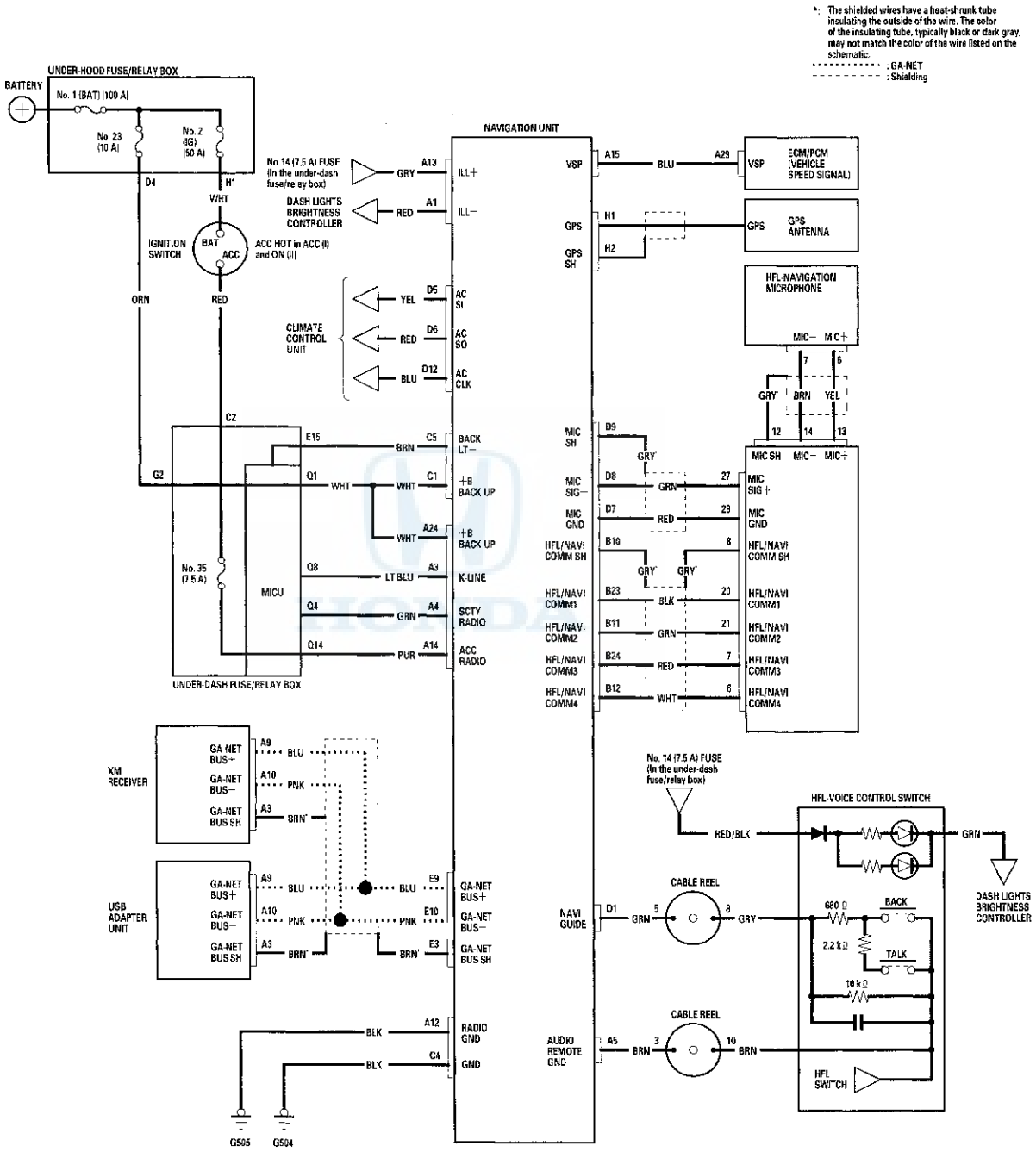

System Diagnostic Mode

Start-up procedure and Diagnostic Menu

Start the vehicle, and at the disclaimer screen use the navigation display hard buttons as described below:

Make sure the battery is in good condition, then press and hold the three buttons MAP/GUIDE, MENU, and CANCEL, for about 3 seconds. The display screen goes directly to the Select Diagnosis Items menu shown.

- Self-Diagnosis Mode (runs the automatic diagnosis of the navigation system)
- Detail Information & Setting (allows you to manually diagnose the navigation system)

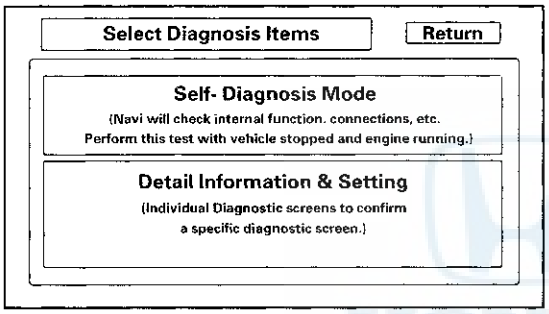

System Links

1. By selecting Self-Diagnosis Mode from the navigation screen main menu. The message at the bottom of the screen flashes indicating the diagnostic is running. Make sure you enter the audio anti-theft code.

   NOTE:
   - The system cannot complete a full diagnosis unless the engine is running.
   - DTC 2703 can be stored when the ignition switch is at ACCESSORY (I). With the ignition switch is in ACCESSORY (I), the climate control unit is turned off and the navigation unit loses communication and stores DTCs. Therefore, there is a possibility that the system is normal even DTC 2703 is stored. Check system links with the engine running, and if it shows normal, the system is OK at this time.

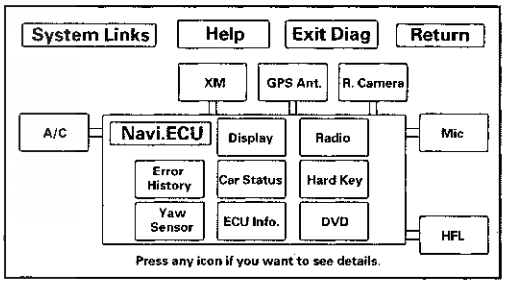

2. Select the icon you want to diagnose. Select the icon to see the details of that diagnostic function.

The System Links function runs automatically and displays a flashing message at the bottom of the screen reminding you to have the engine running for the test. The diagnostic tests the following:

- Most of the wires connecting the navigation components shown in the block diagram.
- The results from the various components shown in the block diagram.
- The microphone is tested by listening to the bong sound produced by the navigation unit from the speakers when the diagnostic is started. This requires that the audio system be operating normally.

When the diagnostic finishes, the icons turn different colors based on their test status. The color definitions are shown below and can also be seen by selecting Help on the System Links screen.

The indication on the screen may not change until you exit and reenter the Self-Diagnosis mode. In some cases, you may have to restart the engine for the indication to change. After you repair the affected component or harness, repeat this diagnostic.

Explanation of each icon
Each icon color is explained in the table.

Icon Colors	Description
Green	The system ran a diagnosis and the results are OK.
Red	Errors that require replacement of hardware or harness. Examples are connection error or memory diagnosis errors. Troubleshoot for DTCs.
Yellow	Errors that doesn't require hardware replacement, such as an open display cover, an incorrect DVD, leaving the vehicle in ACCESSORY (I), or because of a missing accessory, like the rearview camera.
White	The diagnosis is running. The screen functions are locked out while the diagnosis runs.
Gray	The system cannot automatically check this function. You have to select the diagnosis item and manually do additional testing, like checking the navigation buttons in the Hard Key test. When you complete the Hard Key test and return to the System Links menu, the gray icon turns green.

NOTE: By selecting the HELP icon, you can see a description for each color.

(cont'd)

System Diagnostic Mode (cont'd)

Icon Color Information

Icon	Icon Color				
	GREEN	RED	YELLOW	WHITE	GRAY
Display	Result of Connection under the Display diagnosis menu is OK.	Result of Connection under the Display diagnosis menu is NG.	———	Executing (Not completed)	———
Radio	Result of Connection under the Radio diagnosis menu is OK.	Result of Connection under the Radio diagnosis menu is NG.	———	Executing (Not completed)	———
XM	Result of Connection under the XM diagnosis menu is OK.	Result of Connection under the XM diagnosis menu is NG.	———	Executing (Not completed)	———
GPS Ant.	All result of Antenna and Receiver in NAVI ECU is OK.	Any result of Antenna and Receiver in NAVI ECU is NG.	———	Executing (Not completed)	———
R-Camera	Result of Connection under the R-Camera diagnosis menu is OK. (optional)	Result of Connection under the R-Camera diagnosis menu is NG. (optional)	Result of the Connection under the R-Camera diagnosis menu is NG. (optional)	Executing (Not completed)	———
A/C*	Result of Connection under the Aircon diagnosis menu is OK.	Result of Connection under the Aircon diagnosis menu is NG.	———	Executing (Not completed)	———
HFL	Result of Connection under the HFL diagnosis menu is OK.	Result of Connection under the HFL diagnosis menu is NG.	———	Executing (Not completed)	———

*: DTC 2703 can be stored when the ignition switch is in ACCESSORY (I). When the ignition switch in ACCESSORY (I), the climate control unit is turned off and the navigation unit loses communication and stores DTCs. It is possible that the system is normal with DTC 2703 stored. Check the system links with the engine running, and if it shows normal, the system is OK at this time.

Icon	Icon Color				
	GREEN	RED	YELLOW	WHITE	GRAY
Mic	The microphone detects the sound "Pi-Pi-Pon" at the system link menu.	The microphone could not detects the sound "Pi-Pi-Pon" at the system link menu.	———	Executing (Not completed)	———
ECU Info.	Both V-RAM or D-RAM is OK, and all Program Flash, Serial No., Model is available, and the DVD lid is closed.	Either the V-RAM or D-RAM is NG, or any of the Program Flash, Serial No., Model is unavailable.	DVD lid is opened	Executing (Not completed)	———
Hard Key	All buttons are pressed and are detected under Hard key menu.	All buttons are not pressed or pressed but not detected under Hard key menu, or exit from Hard key menu without the button not detected.	———	———	Until changing to Hard key menu.
Error History	———	———	Hard Error or Soft Error is detected under Error History menu.	Executing (Not completed)	Hard Error or Soft Error is not detected under Error History menu.
DVD	DVD mechanism is normal and the proper DVD is installed.	———	Improper DVD is installed, or DVD is not installed, or can not identify software version from the DVD or internal mechanism failure.	Executing (Not completed)	———
Yaw Sensor	Result of the Yaw Sensor diagnosis menu is OK.	Result of the Yaw Sensor diagnosis menu is NG.	Result of the Zero Point Output under the Yaw Sensor diagnosis menu is NO CHECK.	Executing (Not completed)	———
Car Status	———	———	———	———	Check these systems manually.

(cont'd)

System Diagnostic Mode (cont'd)

Factory diagnostic screen In Line Diag

NOTE: If the vehicle left the factory in the factory diagnostic mode, or if the navigation unit is replaced, you will see this screen every time you turn on the ignition.

When a navigation unit is powered up for the first time at the factory or after replacement with a new or remanufactured navigation unit, the factory diagnosis screen (In Line Diag) appears. Normally the factory does the steps necessary to verify proper operation and terminate the factory diagnostic.
Until the proper confirmation sequence is done, the screen appears every time the vehicle is started.

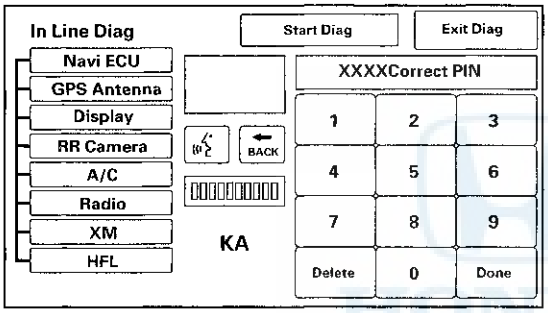

Follow the steps to prevent the screen from showing up in the future:

- Press and hold the buttons (MENU, MAP/GUIDE, and CANCEL) for about 3 seconds. The Select Diagnosis items screen appears.
- Press and hold the MAP/GUIDE button for 5—10 seconds. A screen with a Complete button, appears.
- Press complete, then Return, and then shut the key off for 5 seconds. Do not disconnect the battery during this period as the unit is saving the setting to the SRAM memory. The In Line Diag should not appear again.
- Restart the vehicle, and confirm normal operation by completing the TQI of the Navigation System Service Bulletin.

Detailed Information & Settings

These section allows you to run a specific diagnostic and allows additional setting choices for some screens that are not shown when selecting an icon from the System Links screen.

When you select the menu item Detail Information & Setting menu, the main diagnosis menu is displayed.

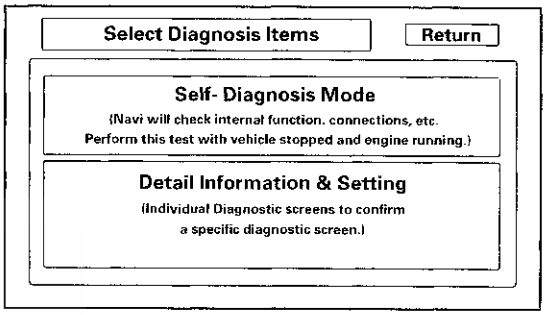

Monitor Check

Overview of display unit.
The illumination input from the gauge brightness control provides back lighting for the buttons surrounding the screen.

These screens allow you to troubleshoot the navigation display. Select the item you want to troubleshoot, and follow the diagnostic instructions.

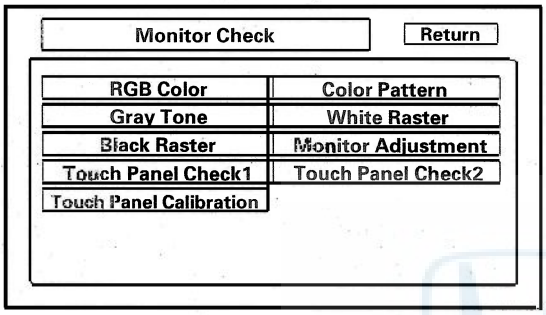

RGB Color
This screen verifies that the display unit is receiving the video (R, G, B and Composite sync) signals properly. The three primary colors should all appear without distortion. The combination of all three should produce a central white section. If the picture has lines in it, or scrolls horizontally or vertically, and any of the colors are missing, troubleshoot for a composite sync and color signal problem (see page 23-314).

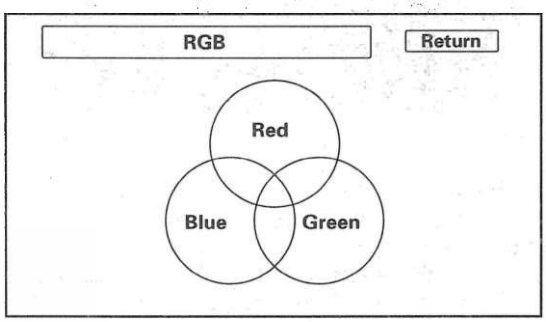

Gray Tone
This screen diagnoses problems with contrast. You should be able to see the changes from bar to bar across the scale. It is normal for the two bars on either side to appear the same. If you can't see changes from bar to bar, replace the navigation unit.

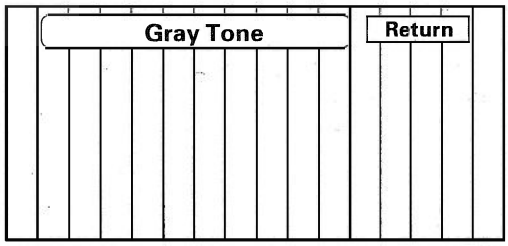

(cont'd)

System Diagnostic Mode (cont'd)

Black Raster
This diagnostic screen checks for pixels that may be stuck on. The entire display must be black. If pixels are stuck on, replace the navigation unit.

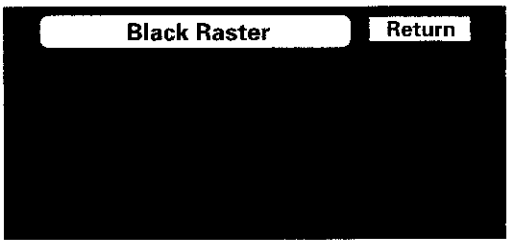

Touch Panel Check 1
The panel touch sensing system consists of a touch sensitive resistive membrane covering the display. Contrary to other systems using infrared beams, the screen has to be physically touched to make it work. The display has the capability of 479 touch locations (left to right), and 233 touch locations (top to bottom). The upper left hand corner is position (0, 0) and the lower right hand corner is (479, 233) as displayed. Touching anywhere on the screen displays the coordinate of the location, and a + icon appears where you touched the screen. If any area of the screen either doesn't respond, or responds at some other location when touched, then replace the navigation unit.

NOTE: Unlike earlier screens that used infrared sensors, direct sunlight does not affect this test.

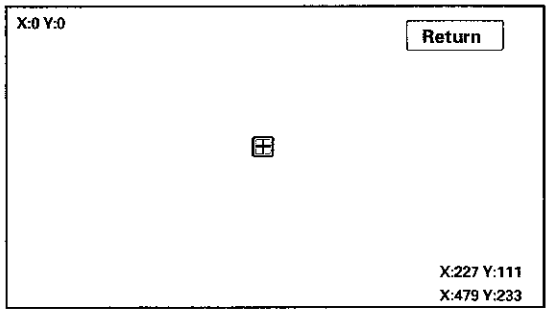

Touch Panel Calibration
The display screen uses a touch sensitive membrane. This means that every location of the entire surface of the display is touch sensitive. This diagnostic allows alignment of these touch locations with the location of the buttons images on the screen.

Normally this should never need adjustment, and is used only to adjust the touch locations for parallax (the touch locations appear different when viewed at an angle). However, if an adjustment is necessary, follow this procedure:

- The screen consists of the + button icons. Touch the center of the five + buttons on order 1—5.
- To store any change you make, touch the Set button.
- Use the Return key to exit the diagnostic.

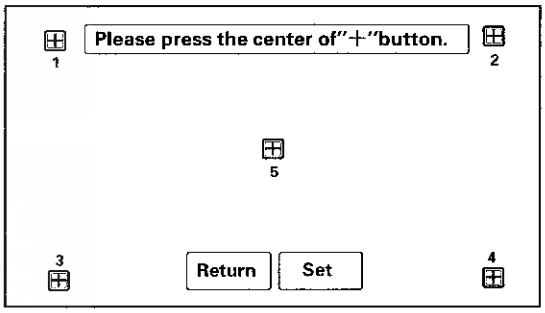

Color Pattern
The chart below shows the colors being used for the map and menu screens. This is for factory use only. To check the color signal use the RGB Color diagnostic found under the Monitor Check.

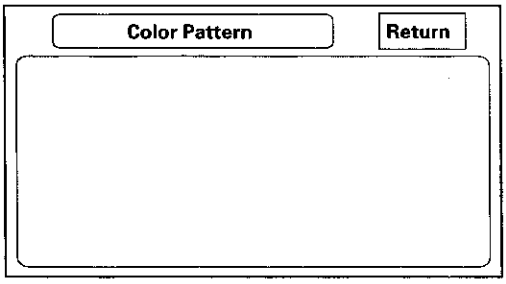

White Raster
This diagnostic screen checks for pixels that may be dead (off). The entire display must be white. If there are dead pixels, replace the navigation unit.

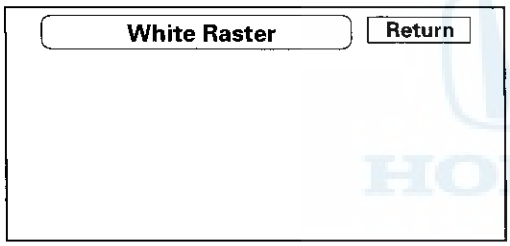

Monitor Adjustment
This allows you to center the navigation display. Use the joystick to move the picture up/down or left/right. It is unlikely that you will ever need to adjust the monitor position. The Default button resets the display position to factory specifications. The factory default is (0, 0). The H-POS button is for factory use only.

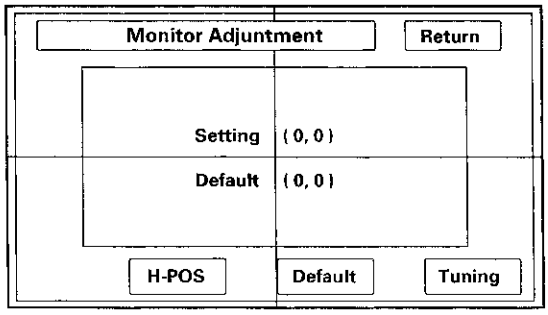

Touch Panel Check 2
If you touch the any icons on the screen, the icon color changes while pressing the icon. If any icons of the screen doesn't respond, replace the navigation unit.

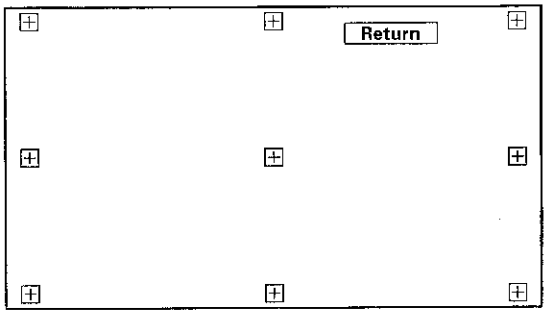

(cont'd)

System Diagnostic Mode (cont'd)

Unit Check (Quick Check)

Some of the tests and screens that are displayed under the Unit Check are different from the more detailed checks listed in other areas of this service manual.

To start the test, select the item you want to check.

- Display
- Radio
- GPS
- ECU Info.
- Rear Camera
- PC Card Info
- Hard Key
- Yaw Sensor
- DVD
- Aircon
- HFL
- XM

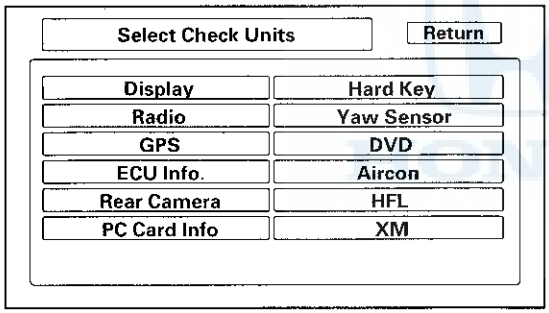

Display
This performs additional checks on the communication bus between the navi CPU and the navigation display. In addition, this test checks the internal electronic functions.

If the connection is NG, replace the navigation unit.

- Connection verifies internal communications.
- Version represents the software version for the display.

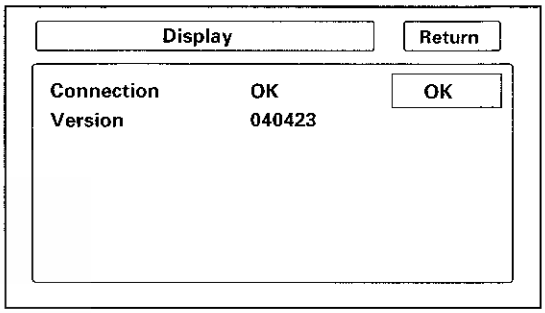

Radio
This diagnostic screen checks the internals of the radio (AM and FM) and CD player. If NG, replace the navigation unit.

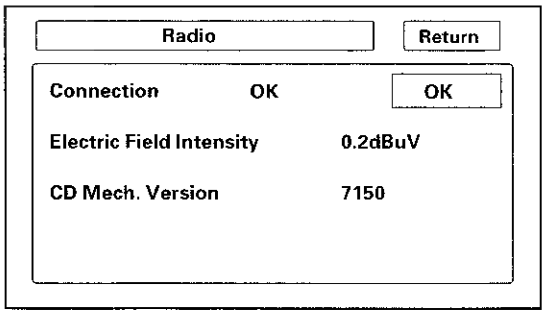

GPS
If GPS indicates NG (ANT), then check the entire GPS antenna wire from the navigation unit to the GPS antenna. If the wire is crushed or damaged, try a known-good antenna. If the diagnostic reads OK, replace the original GPS antenna. If the diagnostic still reads NG (ANT), replace the navigation unit.
Select information to see the GPS satellite details.

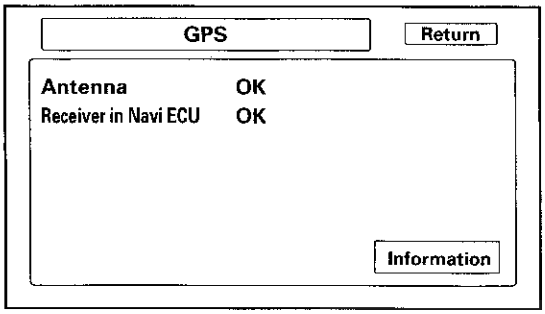

ECU Info.
This screen looks for problems in the navigation unit. When you initiate this diagnosis, the navigation unit may freeze or delay up to a minute while the diagnosis runs.

NOTE: Do not try to end this diagnostic by pressing OK or Mem clear before it finishes, otherwise the system may reboot.

- If V-RAM or D-RAM is NG, replace the navigation unit.
- DVD lid displays the state of DVD Lid of navigation unit.
- Program Flash: Displays the version of the navi software in memory.
- Program on DVD: If displayed, this value represents the version of the navigation software on the navi DVD.
- DVD version represents the database version on the DVD. You can find this information in either the Setup Screen Version, or in the Diagnostic Screen Version.
- Serial No. should be the same as the serial number found on the underside of the navigation unit. You need this number to obtain the security code from the Interactive Network (iN) system.
- The Mem Clear is for factory use and should not be used unless instructed by the factory.
  Selecting this will clear the customer's settings, personal information, GPS orbital data, and anything else stored in memory.

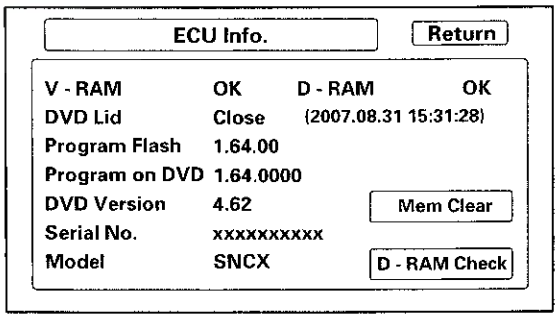

(cont'd)

System Diagnostic Mode (cont'd)

Rear Camera (Optional)
- If the optional rearview camera is connected, it is displayed as OK.
- It displays OFF when the optional rearview camera is not connected.

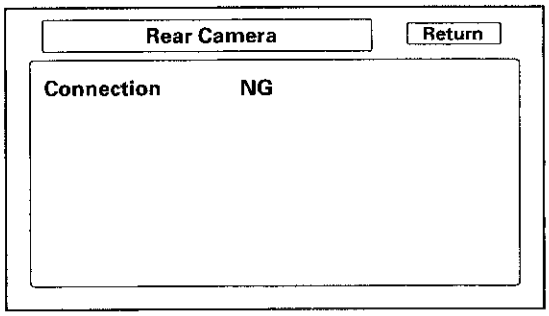

PC Card Information
There is no PC Card in the PC slot, and the screen should display, PC Card is not inserted.

NOTE: Do not insert any card or object into the slot.

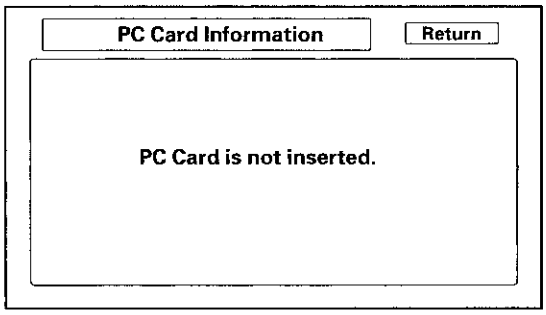

If the factory provides a PC card and instructs you to insert it, the screen displays the Manufacturer, and Product Name as shown in the following screen. Follow the instructions provided by the factory to complete the test.

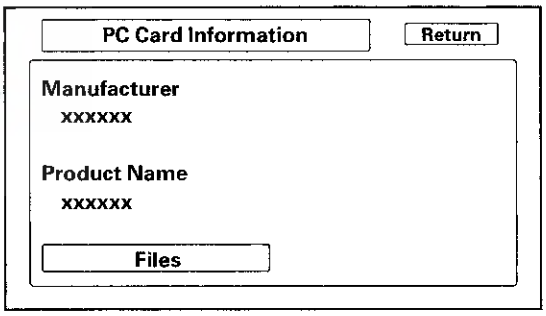

Hard Key
This diagnostic screen checks the status of each of the hard buttons surrounding the navigation display. When you press each hard button, the corresponding item on the screen should flash blue. Touch the return key, or press and hold the joystick to exit.

NOTE: It is normal for the VOL (+, −), CH (+, −) and MODE button to be inactive.

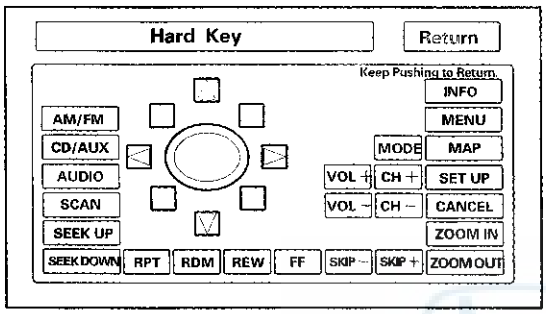

Yaw Sensor
This screen gives a quick test of the yaw sensor functionality based on the two voltages Sensor and Offset. For more information see the Yaw Rate Diagnostic.

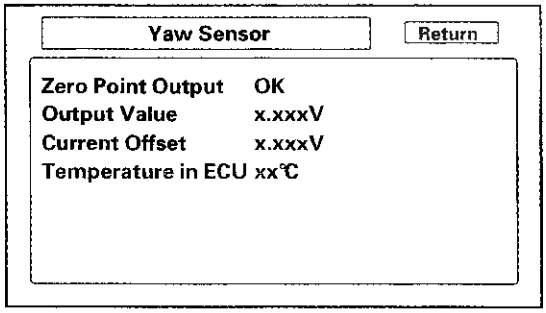

DVD
This diagnostic tests the navigation DVD reader.

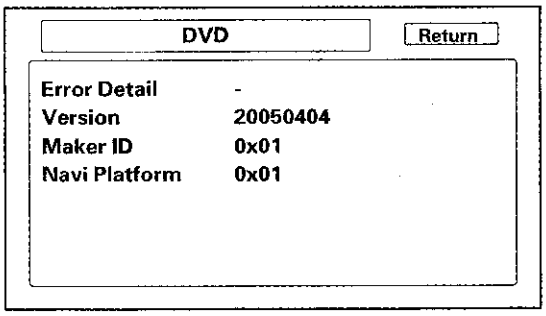

Aircon
This diagnostic tests the climate bus connection (AC-SI and AC-SO) between the navigation unit and climate control unit. Make sure the engine is running for this test.

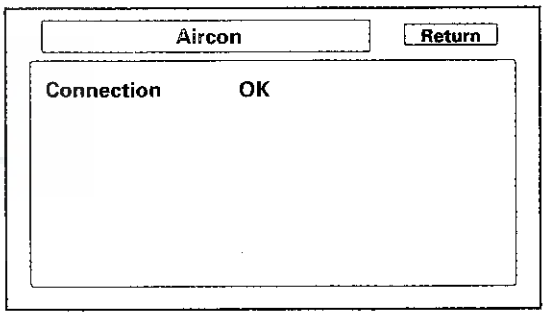

HFL
This checks the 4 wire communication bus between the HFL and the navigation control unit.

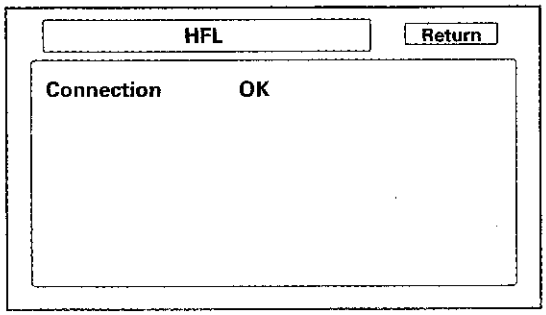

(cont'd)

System Diagnostic Mode (cont'd)

XM

- This checks the GA-NET Bus line to the XM receiver.
- When connection is shown with NG, check the connection between the XM receiver and the navigation unit.

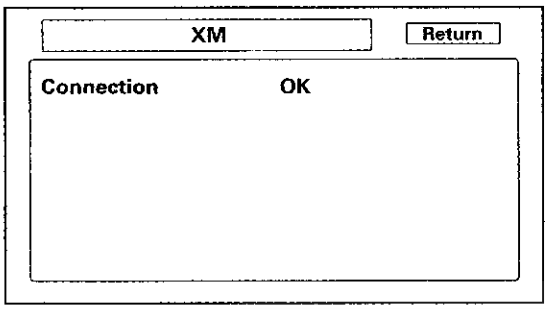

Functional Setup

Select the item you want to check.

- Save Users Memory
- Demo Mode
- Mic Level

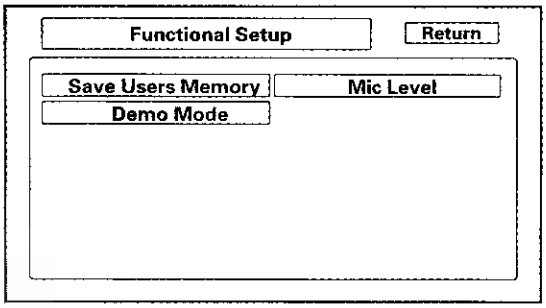

Save Users Memory

When replacing the navigation unit, this function allows the dealer to transfer the customer's personal data to the new navigation unit. The transferred information includes their Setup settings, and personal addresses. The dealer inserts a PC card to the navigation unit, and then selects the Save Users Memory function. The two functions in this diagnostic screen are EXPORT and IMPORT. EXPORT saves the customer's data to the PC card, and IMPORT moves the PC card files to the new navigation unit.

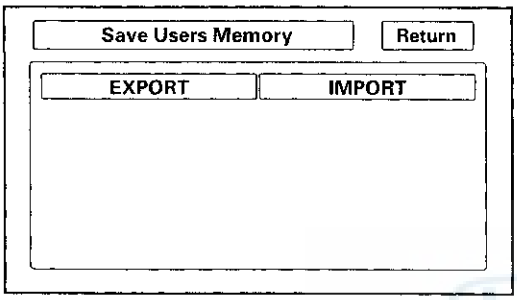

Before starting this function, see the PC Card FAQs for information regarding PC cards, and how to use this function.

1. Select EXPORT button to move the customer's data from the original navigation unit to the PC card. Select YES on the Export User Data Confirmation screen. The process takes only a couple of seconds. The system stores two files on the card.

   NOTE: If the EXPORT button is grayed out, check the PC card's edge connector, and the pins inside the navigation unit (with a flashlight) for damage.

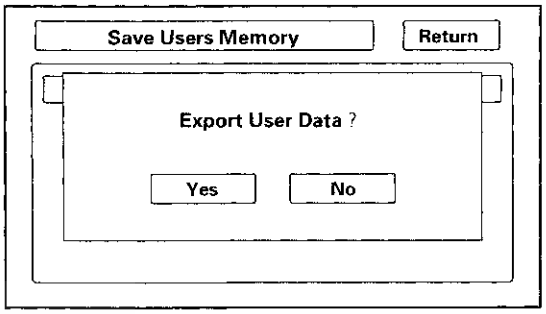

2. After installing the customer's original DVD in the new navigation unit, allow the system to boot up. Insert the PC card in the new navigation unit and enter the Save Users Memory in the navigation system diagnostic mode.

3. Select IMPORT button to move the two files stored by the Export process from the PC card to the new navigation unit. Select YES on the Import User Data Confirmation screen. When the transfer is finished (a few seconds) the system automatically reboots. After the system reboots, remove the PC card from the PC slot.

   NOTE: If the IMPORT button is grayed out, check if the Model and the Program Flash shown on the Version screen are the same.

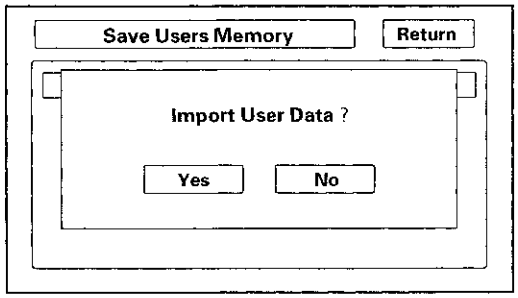

(cont'd)

System Diagnostic Mode (cont'd)

Demo Mode

This screen is for factory use only, and should always be set to OFF. Occasionally the DEMO setting is turned ON when vehicles are being used at Auto Shows or similar events. Turning this feature on, allows the navigation system to automatically follow a route to a destination when the vehicle is stationary. The Speed changes the speed of the demo mode.

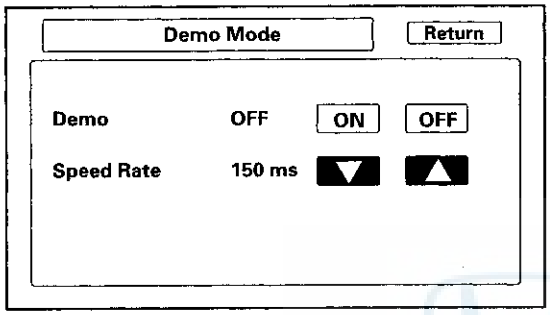

Mic Level

This diagnostic allows you to independently test the microphone and the navigation TALK and BACK buttons. They are used to activate the voice control system. The microphone is located near the map light in the roof console. The microphone can isolate the driver's voice, even where there is noise or other conversations in the vehicle. To properly check the microphones, make sure you are sitting in the driver's seat.

- Press the navigation TALK button on the steering wheel, wait unit you hear a beep, and in a normal voice say "testing". The TALK indicator on the screen should momentarily turn green, and the text Now Recording... should appear in yellow. If the TALK indicator shown on the screen does not briefly turn green, check the wiring from the steering wheel navigation TALK button to the navigation unit. If there is no Mic Level movement when you speak, then you should check the wires running from the microphone in the roof console to the HandsFreeLink control unit and the navigation unit. If the wires are OK, the microphone must be faulty; replace the microphone located in roof console (see page 20-71).
- Press the navigation BACK button on the steering wheel. This should cause the Cancel indicator on the screen to momentarily turn green. If it does not briefly turn green, check the wiring from the steering wheel navigation BACK button to the navigation unit.

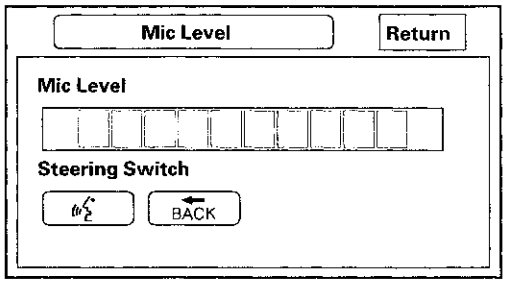

Coverage Area

This screen allows the dealer to select the area that applies to their location. The choice is US (continental) or Hawaii. The default is US. Select the coverage area (the system may reboot), exit the diagnostic mode, and restart the vehicle.

If a customer relocates a vehicle from the US mainland to Hawaii,or returns from Hawaii to the US mainland, you need to change the coverage area to display the correct maps.

NOTE: This function operates only when the vehicle is physically located in the coverage area you select.

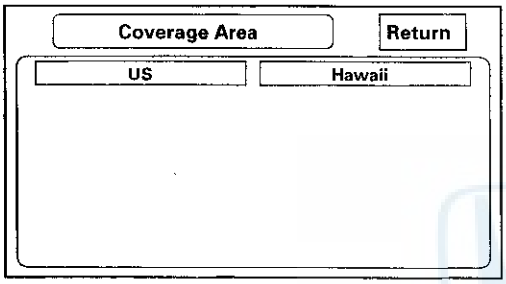

GPS Information

This screen shows the current status of GPS reception. The circular diagram shows the current location of the GPS satellites (yellow numbers) as they would appear in the sky. The outer circle represents the horizon (0 degrees elevation). The middle and inner circles represents 30 and 60 degrees respectively. The very center of the diagram (90 degrees elevation) is directly overhead. Nearby obstructions, like tall buildings will block satellites in that direction. That is why it is necessary to be in an open area to effectively troubleshoot GPS reception issues. The satellite numbers shown on the diagram correspond to the PRN number in the GPS Details screen. There are always at least 24 active GPS satellites in orbit. Because satellites fail, and have to be removed from service, spares are always parked in orbit, ready to be activated. This is why the PRN (satellite ID number) can be greater than 24.

NOTE: When you use this screen for troubleshooting, park the vehicle outside, away from buildings, tall trees, and high-tension wires for at least 10 minutes with the engine running.

- The Number of Satellites box shows the number of acquired satellites (maximum of 12). It should contain three or more icons. If not troubleshoot for GPS icon is white or not shown (see page 23-316).
- The Current Position shows latitude, longitude, and elevation (in feet). If there are less than four satellites, the elevation can be grossly inaccurate.
- The Date/Time field shows the current date, and also a time that includes daylight savings and other offsets entered by the customer in Setup screen 2 Adjust Time Zone/Clock.

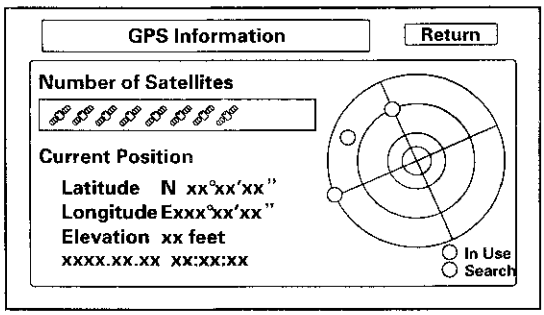

NOTE: Pressing the map/guide button displays the satellite number on each circle.

(cont'd)

System Diagnostic Mode (cont'd)

GPS Detail

By pressing and holding the MENU button for 2 seconds, a GPS Detail screen appears. This screen displays real time incoming satellite positional data when the vehicle is outside in the open. The information shown on this screen is for factory use.

NOTE: The data shown in an example only.

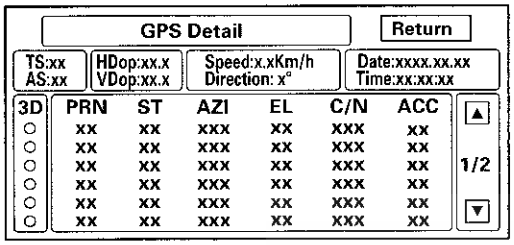

- The box TS/AS and H Dop/V Dop is for factory use.
- The Speed and Direction information is updated in real time when driving.
- The Date/Time Information is the same as in Setup screen 2 Adjust Time Zone/Clock.
- If the 3D icon is shown above the yellow dots, this implies that at least four satellites are available for map positioning, and the GPS indicator on the map screen will be green. See the Global Positioning System detailed explanation in the System Description.
- If the row of data in the table below begins with a yellow dot, the AZI and EL fields can be used to locate each satellite on the circular GPS diagram (see prior screen).

NOTE: The table of values define the terms at the top of the columns in the GPS Detail screen.

Column	Description	Problem indication
3D	Active satellites (Yellow Dot)	If 3D or 2D is missing when the vehicle is parked outside, follow GPS icon is white or not shown troubleshooting (see page 23-316).
PRN	The satellite ID number	
ST	The status: 0 = cannot view or searching, 2 = acquiring	If all 0, then, follow GPS icon is white or not shown troubleshooting (see page 23-316).
AZI	Azimuth, the angle (0—360) clockwise from north	
EL	Elevation from the horizon (90 deg is overhead)	
C/N	N/A	Normal signal is 49-52, no signal: 27-33
ACC	N/A	
△ 1/2 or 2/2 ▽	Shows view of all satellites in two screen views 1/2 or 2/2	

Yaw Rate

This diagnostic checks the yaw rate sensor in the navigation unit. This device detects when the vehicle turns, and repositions the vehicle position icon on the map screen. For more detailed information, see the yaw rate sensor theory of operation under System Description (see page 23-258).

- Sensor indicates the voltage output from the yaw rate sensor. It should indicate about 2.500 V when the vehicle is stopped.
- Offset is the reference voltage or standard within the yaw rate sensor. It also should indicate about 2.500 V when the vehicle is stopped.
- A sensor output voltage LOWER than the Offset voltage indicates that the vehicle is turning to the right.
  A sensor output voltage HIGHER than the Offset voltage indicates that the vehicle is turning to the left.
- The yaw rate offset, and sensor should both indicate about 2.500 V when the vehicle is stopped. If either reads zero, or 5.000 V, replace the navigation unit.
- The yaw rate offset and sensor should be within +/—0.01 V of each other when the vehicle is stopped. The sensor value should change relative to the offset as the vehicle turns while driving. If not, replace the navigation unit.

Example: Vehicle stopped

Normal		**Abnormal**	
Offset	2.526 V	Offset	2.526 V
Sensor	2.516—2.536 V	Sensor	2.623 V

Example: Vehicle turning

Normal		**Abnormal**	
Offset	2.526 V	Offset	2.526 V
Sensor	2.678 V (left turn) 2.478 V (right turn)	Sensor	2.623 V (no change on turns)

- Sensitivity study represents the status of the internal tuning function. At initialization, this value starts at 6 and increases to 10 as the internal correction values become more accurate.
- The settings CCW Cal Factor, CW Cal Factor, and Set are for factory use only. THIS SHOULD NEVER BE ADJUSTED.
- For detailed analysis of the yaw rate select tuning.

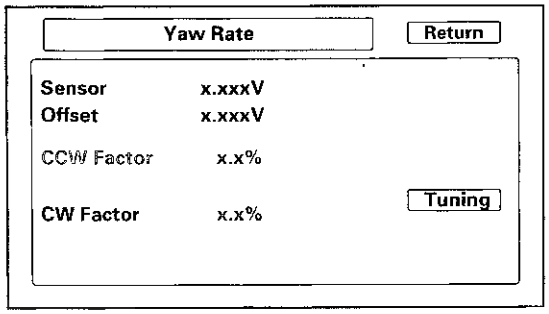

(cont'd)

System Diagnostic Mode (cont'd)

Yaw Rate Tuning

This diagnostic allows you to graphically display problems with the yaw rate sensor.

- The ANG-Disp value accumulates any differences between the offset and sensor voltages (see Yaw Rate diagnostic). When the sensor functions properly, the random changes in these two voltages generally cancels out, so the value is 0. However if one voltage is consistently higher than the other, then the ANG-Disp value accumulates the constant change.
- The Reset button temporarily clears the angular accumulation (ANG-Disp), and clears the display dots.
- Do not touch the CCW, CW, or Set buttons. These are used for factory setup only.

Two tests are explained below. For large problems with the sensor values, the stationary test usually confirms whether the sensor is defective. For yaw rate issues related to driving, do the road test described.

1. Stationary test: If the VP icon spins in place and the ANG-Disp value slowly increases or decreases in value, the yaw rate sensor is defective. Replace the navigation control unit.

2. Road test: Drive the vehicle on a very straight road. Enter the diagnostic mode, select Yaw rate, and touch the Tuning button. While driving down a straight road, the white dots should trace a straight line across the screen. However, if you are driving on a straight road, and you notice the dots constantly dropping down or heading up as you drive, the navigation control unit's yaw sensor is defective. You can touch Reset to clear ANG-Disp, and dotted lines.

   If either test above fails, please enter "Yaw rate sensor defective" for the problem description, on the Navigation core return form.

   NOTE: The CCW, CW and Set buttons are disabled, and cannot be activated.

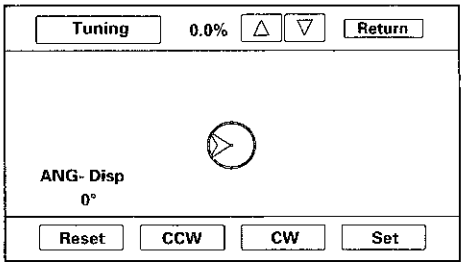

Car Status

Use this screen to confirm that the navigation unit is properly receiving input signals. Signals equal to (0) are OFF, and signals equal to (1) are ON. If the value on the display does not match the actual vehicle status, then check the wire carrying the signal.

- VSP-Vehicle Speed Pulse from PCM (Connector A (24P) terminal No. 15)
  - OFF (0) when vehicle is not moving
  - ON (1) when vehicle is moving

The VSP comes from the PCM as a dedicated signal. Internally, the navigation unit compares the actual VP on the map against street data to adjust the pulse to speed scaling factor. As this scaling factor becomes more accurate, the Level gradually increases from 0 to 10 (see the Tire Calibrate diagnostic screen).

- BACK-Reverse indication from taillight relay (Connector C (8P) terminal No. 5)
  - OFF (0) when the shift lever is in any position other than reverse
  - ON (1) when the shift lever is in reverse

The Back signal is used by the navigation unit to allow the map screen to show the VP moving backwards when in reverse. This signal is needed because the Speed Pulse has no direction indication.

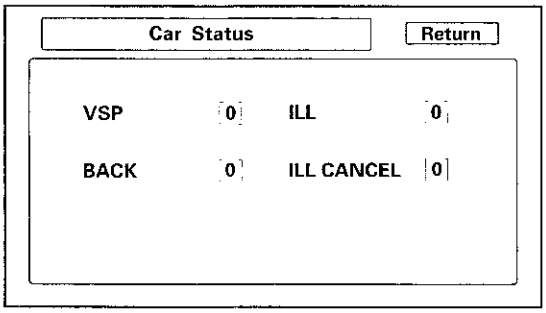

- ILL-Illumination Indication
  (Connector A (24P) terminal No. 13)
  a) OFF (0) when parking lights, or headlights are off
  b) ON (1) when parking lights, or headlights are on

The navigation uses the signal to determine whether to put the navigation screen into the Day or Night brightness mode (Setup screen 1).

- ILL CANCEL
  a) OFF (0) when the dash lights brightness control button is less than 90 % brightness with the headlights turned on.
  b) ON (1) when the dash lights brightness control button is more than 90 % brightness with the headlights turned on.

Version

This screen displays the current version information for the navigation system software. In addition, this screen allows the loading of updated software if requested by the factory, or instructed by a Service Bulletin. Software may be loaded from a CD or a PC card.

- Program Flash: Displays the version of the navigation software in memory.
- Program Disc: If displayed, this value represents the version of the navi software on the navi DVD.

  NOTE: The last two letters of the Program Flash or DVD fields indicate which DVD is installed in the unit. The letters KA imply that a United States DVD is installed. If the letters are KC, then a Canada DVD is installed (See coverage discussion.).

- IPL, APL, DBOOT, and System uCom, are all for factory use.
- Model: For this model, the field should begin with SNC.
- Download: Do not touch, unless instructed by the factory.

  Check any official Honda service website for more service information about navigation DVDs.

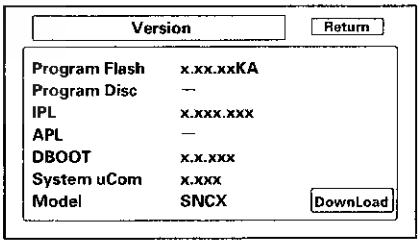

There are two navigation DVDs produced for this model.

- The turquoise DVD labeled United States is for the US market and contains maps for the contiguous 48 US states, and some southern portions of Canada. Customers wanting additional northern coverage in Canada, can purchase a Canada DVD by contacting the DVD fulfillment desk.
- The turquoise DVD labeled Canada, is for the Canada market, and contains maps for all of Canada, plus some of the northern US states. If customers with this DVD require full US coverage (including states like Florida and Texas), they may purchase a United States DVD by contacting the DVD fulfillment desk.

(cont'd)

System Diagnostic Mode (cont'd)

PC Card FAQs

Question	Answer
Where do we buy the flash memory or adaptors, and what do we ask for?	You need a PCMCIA type II adaptor and a flash memory chip. You can purchase them at a computer, or office supply store. The card is the same size and shape as the PC card in the HDS. Adaptors that accept multiple flash types are not recommended.
What memory flash chips will work with what adaptors?	The flash memory devices that have been tested include Compact Flash (CF), and ATA style (like the card in the HDS). Other card types and flash memory chips may work, but have not been tested.
What capacity card do I need for this function?	A memory chip with capacity of 64 MB to 2 GB will work. The two files moved to the PC card during export are less than a Megabyte in size.
Should the dealer have a dedicated PC card for the Export and Import navigation function?	Yes, treat the PC card as a dedicated special tool that should be used anytime the owner of an '07 or later vehicle needs their navigation personal files transferred to a new navigation unit.
What device can I use to maintain the PC card, and delete files?	Any computer store sells USB style card readers that accept the PC card, and allow you to do file maintenance on your PC card. Most laptops will also accept the PC card.
Can we move the customer's data to different models?	No, the files are model specific and will only load into a navigation unit with the same part number.
Can we move the customer's data to the same vehicle with a different software version?	The customer's files can only be transferred to a new navigation unit, if the Model and the Program Flash shown on the Version screen are the same. Files cannot be transferred to the different model and different versions.
Will other files on the PC card like images or music files prevent the Export/Import function from working?	No, the system simply adds two small files that are recognized by the new navigation unit when performing the import function. However, it the PC card is full, the Export function won't work correctly.
Do I have to delete the files on the PC card after each transfer of the personal data?	After the transfer of personal data to the new navigation unit, the files remain on the PC card. Since this is confidential information, Honda recommends deleting these files after the transfer. Please note that each time you export navigation files of the same model and version, the files are overwritten. Over time the PC card accumulates two files for each version of the 8 or so Honda navigation models.
If the memory card needs formatting, what format should I use?	It is unlikely that the PC card will ever need formatting, however if it does, use the FAT (file allocation table) file system.
I can't enter the navigation diagnostic mode to do the Export/Import function. How can I transfer the personal data?	Some internal navigation unit ECU failures may make it impossible to use the Export/Import function.

Question	Answer
Why won't the Export or Import functions work? What do I check as part of troubleshooting?	• The card may not be fully inserted into the slot. Eject the PC card, and inspect for warping or damage to the edge connector. Never use excessive force to insert a PC card. This can damage the pins in the rear of the slot. • The PC card may not contain files that are recognized by the new navigation unit. Navigation data can only be transferred between navigation units with the same Model code, and with the same navi Program flash version. • The flash memory chip type may not be accepted by the system. Only Compact Flash and ATA cards have been tested. • The card's PCMCIA adaptor may prevent a known-good PC card from being recognized. Avoid multi-slot type PCMCIA adaptors that accept several different flash memory types. • The card may be full and as a result the files are stored, but without any data. Export and import appear to function, but move nothing. Delete unused files from the PC card. • There may not be any files on the PC card. If the PC card has a write protection switch, make sure it is turned off before using the Export function. • Although flash memory chips are reliable, occasionally they develop bad sectors or other formatting errors that prevents them from accepting files. The PC card should be reformatted using the FAT format. • The PC card may have been formatted using the format NTFS. Only the FAT format is accepted by the system. • Hard Disc Drive (HDD) cards may not work properly in the system and can overheat or quit functioning, particularly in a hot vehicle. They are not recommended. • Before performing the Import function, ensure that the original navigation DVD is loaded into the new navigation unit and working properly.

(cont'd)

System Diagnostic Mode (cont'd)

Error Message Table

Screen Error Message	Solution
Navigation system is unable to acquire a proper GPS signal.	Make sure there is nothing on the dashboard blocking the GPS antenna. If not, move the vehicle to an open space away from tall buildings, trees, etc. Aftermarket metallic window tinting and other aftermarket devices can affect the GPS reception.
Navigation unit door is open or No DVD disc installed. Please check system.	Make sure the navigation DVD is the correct color and is not scratched or damaged. Make sure it is installed with the label side up and the navigation unit door is snapped fully closed.
No DVD disc, please check system.	Check that the navigation DVD is installed with the label side up.
Display temp is too high. System will shut down until display cools down.	This message appears briefly when the display temperature is too high, and then the display turns off until the temperature cools down. The system turns back on when the display cools down.
Outside temperature is low, system will take a while to start up.	The temperature is below —22 ℉ (—30 ℃) and the navigation unit has difficulties reading the navigation DVD. The system will start up when the temperate warms up.
DVD disc reading error (unformatted), please consult your dealer.	Check the navigation DVD for the correct color and software version. Also check for deep scratches or other damage. Make sure you are using an official Honda navigation DVD (white in color). The system cannot read other mapping databases or video DVDs. Check any official Honda service website for more service information about the navigation system.
Route has not been completed. Please try again from a different location.	Routing to or from a place (new area) that is not in the database. Try planning a different route to or from a different location that is clearly displayed on the map (map matched).
No alternate route found. Original route will be guided.	No alternate route method was found. The original route method will be used.
This destination cannot be found in database.	The destination was not found in the database. Try another destination nearby, or select the destination with the interface dial.

DTC Troubleshooting

DTC 1001: FROM System Info Error

NOTE:
- Check the vehicle battery condition first.
- Before you troubleshoot, make sure to follow the general troubleshooting information (see page 23-241).

1. Turn the ignition switch to LOCK (0), and then back to ON (II).

2. Check for the hard error code (see page 23-248).

   Is DTC 1001 indicated?

   YES—Replace the navigation unit (see page 23-330), because there is an internal problem with the Flash-ROM. ■

   NO—Intermittent failure, the system is OK at this time. ■

DTC 1101: Media Bus Send Error

NOTE:
- Check the vehicle battery condition first.
- Before you troubleshoot, make sure to follow the general troubleshooting information (see page 23-241).

1. Clear hard error code (see page 23-249).

2. Turn the ignition switch to LOCK (0), and then back to ON (II).

3. Check for the hard error code (see page 23-248).

   Is DTC 1101 indicated?

   YES—Replace the navigation unit (see page 23-330). ■

   NO—Intermittent failure, the system is OK at this time. ■

DTC Troubleshooting (cont'd)

DTC 1201: DVD High Temp

NOTE:
- Check the vehicle battery condition first.
- Before you troubleshoot, make sure to follow the general troubleshooting information (see page 23-241).
- This code sets when the internal temperature of the navigation unit ECU rises above 158 °F (70 °C). The unit is designed to shut down to protect the navigation unit ECU. This could be caused by an inoperative navigation unit ECU fan or if the dash temperature exceeds the maximum. Do the troubleshooting when the unit is within the allowable temperature range.

1. Check that the temperature is below 158 °F (70 °C) in the dash.

2. Clear the hard error code (see page 23-249).

3. Turn the ignition switch to LOCK (0), and then back to ON (II).

4. Check for the hard error code (see page 23-248).

   Is DTC 1201 indicated?

   YES—Replace the navigation unit (see page 23-330). ■

   NO—Intermittent failure, the system is OK at this time. If the unit repeatedly comes back with the DTC, replace the navigation unit. ■

DTC 1202: DVD Low Temp

NOTE:
- Check the vehicle battery condition first.
- Before you troubleshoot, make sure to follow the general troubleshooting information (see page 23-241).
- This code sets when the internal temperature of the navigation unit ECU falls below −4 °F (−20 °C). The unit is designed to shut down to protect the navigation unit ECU. This is usually caused by very cold exterior temperatures. Do the troubleshooting when the unit is within the allowable temperature range.

1. Check that the temperature is above −4 °F (−20 °C) in the dash.

2. Clear the hard error code (see page 23-249).

3. Turn the ignition switch to LOCK (0), and then back to ON (II).

4. Check for the hard error code (see page 23-248).

   Is DTC 1202 indicated?

   YES—Replace the navigation unit (see page 23-330). ■

   NO—Intermittent failure, the system is OK at this time. ■

DTC 1301: GPS Antenna Error

NOTE:
- Check the vehicle battery condition first.
- Before you troubleshoot, make sure to follow the general troubleshooting information (see page 23-241).
- Make sure the vehicle is parked outside, away from buildings.
- Aftermarket electronic devices located near the navigation unit or GPS antenna can potentially interfere with the operation of the navigation system.

1. Clear the hard error code (see page 23-249).

2. Turn the ignition switch to LOCK (0), and then back to ON (II).

3. Check for the hard error code (see page 23-248).

   Is DTC 1301 indicated?

   YES—Go to step 4.

   NO—Intermittent failure, the system is OK at this time.■

4. Turn the ignition switch to LOCK (0).

5. Check for poor connections or loose terminals at the navigation unit connector H (2P).

6. Clear the hard error code.

7. Turn the ignition switch to LOCK (0), and then back to ON (II).

8. Check for the hard error code.

   Is DTC 1301 indicated?

   YES—Go to step 9.

   NO—Intermittent failure, the system is OK at this time.■

9. Turn the ignition switch to LOCK (0).

10. Replace a known-good GPS antenna (see page 23-333).

11. Turn the ignition switch to ON (II).

12. Clear the hard error code.

13. Turn the ignition switch to LOCK (0), and then back to ON (II).

14. Check for the hard error code.

    Is DTC 1301 indicated?

    YES—Replace the original GPS antenna.■

    NO—Replace the navigation unit (see page 23-330).
    ■

DTC Troubleshooting (cont'd)

DTC 1302: GPS Receiver Error 1

NOTE:
- Check the vehicle battery condition first.
- Before you troubleshoot, make sure to follow the general troubleshooting information (see page 23-241).
- Make sure the vehicle is parked outside, away from buildings.
- Aftermarket electronic devices located near the navigation unit or GPS antenna can potentially interfere with the operation of the navigation system.

1. Clear the hard error code (see page 23-249).
2. Turn the ignition switch to LOCK (0), and then back to ON (II).
3. Check for the hard error code (see page 23-248).

   Is DTC 1302 indicated?

   YES—Go to step 4.

   NO—Intermittent failure, the system is OK at this time.■
4. Turn the ignition switch to LOCK (0).
5. Check for poor connections or loose terminals at the navigation unit connector H (2P).
6. Clear the hard error code.
7. Turn the ignition switch to LOCK (0), and then back to ON (II).
8. Check for the hard error code.

   Is DTC 1302 indicated?

   YES—Go to step 9.

   NO—Intermittent failure, the system is OK at this time.■
9. Turn the ignition switch to LOCK (0).
10. Replace a known-good GPS antenna (see page 23-333).
11. Turn the ignition switch to ON (II).
12. Clear the hard error code.
13. Turn the ignition switch to LOCK (0), and then back to ON (II).
14. Check for the hard error code.

    Is DTC 1301 indicated?

    YES—Replace the original GPS antenna.■

    NO—Replace the navigation unit (see page 23-330).■

DTC 1303: GPS Receiver Error 2

NOTE:
- Check the vehicle battery condition first.
- Before you troubleshoot, make sure to follow the general troubleshooting information (see page 23-241).
- Make sure the vehicle is parked outside, away from buildings.
- Aftermarket electronic devices located near the navigation unit or GPS antenna can potentially interfere with the operation of the navigation system.

1. Clear the hard error code (see page 23-249).

2. Turn the ignition switch to LOCK (0), and then back to ON (II).

3. Check for the hard error code (see page 23-248).

   Is DTC 1303 indicated?

   YES—Replace the navigation unit (see page 23-330). ■

   NO—Intermittent failure, the system is OK at this time. ■

DTC 1305: Gyro Error 2: ECU Temp xx ℃

NOTE:
- Check the vehicle battery condition first.
- Before you troubleshoot, make sure to follow the general troubleshooting information (see page 23-241).
- Make sure the vehicle is parked outside, away from buildings.
- Aftermarket electronic devices located near the navigation unit or GPS antenna can potentially interfere with the operation of the navigation system.
- Do this test only when the dash temperature is between −4 ℉ (−20 ℃) and 158 ℉ (70 ℃).

1. Clear hard error code (see page 23-249).

2. Turn the ignition switch to LOCK (0), and then back to ON (II).

3. Check for the hard error code (see page 23-248).

   Is DTC 1304 indicated?

   YES—Replace the navigation unit (see page 23-330). ■

   NO—Intermittent failure, the system is OK at this time. ■

DTC Troubleshooting (cont'd)

DTC 1306: Vehicle Speed Pulse

NOTE:
- Check the vehicle battery condition first.
- Before you troubleshoot, make sure to follow the general troubleshooting information (see page 23-241).

1. Clear the hard error code (see page 23-249).

2. Turn the ignition switch to LOCK (0), and then start the engine.

3. Check for the hard error code (see page 23-248).

   Is DTC 1306 indicated?

   YES—Go to step 4.

   NO—Intermittent failure, the system is OK at this time.■

4. Drive the vehicle and watch the VSP signal.

   Does the VSP signal change from [0] to [1] as you drive?

   YES—Replace the navigation unit (see page 23-330). ■

   NO—Do the symptom troubleshooting for vehicle position icon constantly leaves road, moves erratically or is very far from actual position (see page 23-319).■

DTC 1307: DVD Read Error

NOTE:
- Check the vehicle battery condition first.
- Check any official Honda service website for more information about the navigation system.
- Before you troubleshoot, make sure to follow the general troubleshooting information (see page 23-241).
- Inspect the navigation DVD for scratches or damage.

1. Turn the ignition switch to ON (II).

   Is there a DVD error message?

   YES—Go to DVD screen error messages (see page 23-294).■

   NO—Go to step 2.

2. Clear the heard error code (see page 23-249).

3. Turn the ignition switch to LOCK (0), and then back to ON (II).

4. Check for the hard error code (see page 23-248).

   Is DTC 1307 indicated?

   YES—Replace the navigation unit (see page 23-330). ■

   NO—Intermittent failure, the system is OK at this time.■

DTC 1402: Audio Error 2

NOTE:
- Check the vehicle battery condition first.
- Before you troubleshoot, make sure to follow the general troubleshooting information (see page 23-241).

1. Clear the hard error code (see page 23-249).

2. Turn the ignition switch to LOCK (0), and then back to ON (II).

3. Check for the hard error code (see page 23-248).

   Is DTC 1402 indicated?

   YES—Check if the audio unit functions are working properly. If any problems are found, go to the applicable troubleshooting in audio section.■

   NO—Intermittent failure, the system is OK at this time.■

DTC 1409: Audio Error 9

NOTE:
- Check the vehicle battery condition first.
- Before you troubleshoot, make sure to follow the general troubleshooting information (see page 23-241).

1. Clear the hard error code (see page 23-249).

2. Turn the ignition switch to LOCK (0), and then back to ON (II).

3. Check for the hard error code (see page 23-248).

   Is DTC 1409 indicated?

   YES—Check the XM error codes (see page 23-176). If any codes are detected, go to the applicable troubleshooting in audio (XM) section.■

   NO—Intermittent failure, the system is OK at this time.■

HONDA

Navigation System ('09 models)

DTC Troubleshooting (cont'd)

DTC 2607: XM Diag

NOTE: Before you troubleshoot, make sure to follow the general troubleshooting information (see page 23-241).

1. Clear the hard error code (see page 23-249).

2. Turn the ignition switch to LOCK (0), and then back ON (II).

3. Go into the Diagnostic Menu, and select the Self-Diagnosis Mode in the Select Diagnosis Items menu (see page 23-272).

4. Check the System Links.

   Is the XM icon red?

   YES—Go to step 5.

   NO—Intermittent failure, the system is OK at this time.■

5. Turn the ignition switch to LOCK (0).

6. Check for poor connections or loose terminals at navigation unit connector E (14P), USB adapter unit connector A (14P), and XM receiver connector A (14P).

   Are the connections OK?

   YES—Go to step 7.

   NO—Repair poor connections or loose terminals, and recheck the self-diagnosis mode (see page 23-272).■

7. Disconnect navigation unit connector E (14P) and XM receiver connector A (14P).

8. Connect navigation unit connector E (14P) terminals No. 9 and No. 10 with a jumper wire.

NAVIGATION UNIT CONNECTOR E (14P)

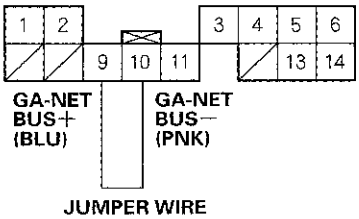

Wire side of female terminals

9. Check for continuity between XM receiver connector A (14P) terminals No. 9 and No. 10.

XM RECEIVER CONNECTOR A (14P)

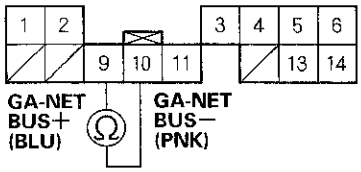

Wire side of female terminals

Is there continuity?

YES—Go to step 10.

NO—Open in the wire between the navigation unit and the XM receiver. Replace the affected shielded harness.■

10. Disconnect USB adapter unit connector A (14P).

11. Check for continuity between navigation unit connector E (14P) terminals No. 9 and No. 10.

NAVIGATION UNIT CONNECTOR E (14P)

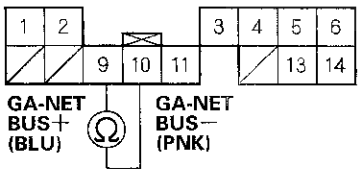

Wire side of female terminals

Is there continuity?

YES—Short in the wires between GA-NET (+) and (−) wire. Replace the affected shielded harness.■

NO—Go to step 12.

12. Check for continuity between body ground and navigation unit connector E (14P) terminals No. 9 and No. 10 individually.

NAVIGATION UNIT CONNECTOR E (14P)

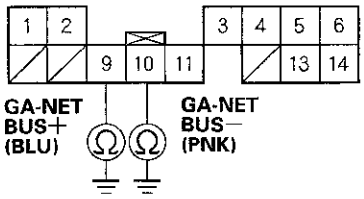

Wire side of female terminals

Is there continuity?

YES—Short to body ground in the wire(s) between the navigation unit, the USB adapter unit, and the XM receiver. Replace the affected shielded harness.■

NO—Go to step 13.

13. Reconnect the all connectors, then turn the ignition switch to ON (II).

14. Go into the Diagnostic Menu, and select the Self-Diagnosis Mode in the Select Diagnosis Items menu (see page 23-272).

(cont'd)

DTC Troubleshooting (cont'd)

15. Check the System Links.

    Is the XM icon red?

    YES—Go to step 16.

    NO—Intermittent failure, the system is OK at this time.■

16. Turn the ignition switch to LOCK (0).

17. Disconnect USB adapter unit connector A (14P), and then turn the ignition switch to ON (II).

18. Go into the Diagnostic Menu, and Select the Self-Diagnosis Mode in the Select Diagnosis Items Menu (see page 23-272).

19. Check the System Links.

    Is the XM icon red?

    YES—Go to step 20.

    NO—Internal short circuit in the USB adapter unit.■

20. Turn the ignition switch to LOCK (0).

21. Connect USB adapter unit connector A (14P).

22. Disconnect XM receiver connector A (14P), and then turn the ignition switch to ON (II).

23. Go into the Diagnostic Menu, and Select the Self-Diagnosis Mode in the Select Diagnosis Items Menu (see page 23-272).

24. Check the System Links.

    Is the XM icon red?

    YES—Replace the navigation unit (see page 23-330). ■

    NO—Replace the XM receiver (see page 23-234).■

DTC 2609: VRAM Diag

NOTE: Before you troubleshoot, make sure to follow the general troubleshooting information (see page 23-241).

1. Clear the hard error code (see page 23-249).

2. Turn the ignition switch to LOCK (0), and then back to ON (II).

3. Go into the Diagnostic Menu, and select the Self-Diagnosis Mode in the Select Diagnosis items menu (see page 23-272).

4. Select the System Links, then select the ECU Info.

   Is V-RAM OK indicated?

   YES—Intermittent failure, the system is OK at this time.■

   NO—Replace the navigation unit (see page 23-330). ■

DTC 2610: DRAM Diag

NOTE:
- Check the vehicle battery condition first.
- Before you troubleshoot, make sure to follow the general troubleshooting information (see page 23-241).

1. Clear the hard error code (see page 23-249).

2. Turn the ignition switch to LOCK (0), and then back to ON (II).

3. Go into the Diagnostic Menu, and select the Self-Diagnosis Mode in the Select Diagnosis items menu (see page 23-272).

4. Select the System Links, then select the ECU Info.

   Is D-RAM OK indicated?

   YES—Intermittent failure, the system is OK at this time.■

   NO—Replace the navigation unit (see page 23-330). ■

DTC 2701: GPS Diag: Antenna

NOTE:
- Check the vehicle battery condition first.
- Before you troubleshoot, make sure to follow the general troubleshooting information (see page 23-241).
- Make sure the vehicle is parked outside, and away from buildings.
- Check for electronic aftermarket accessories (possibly hidden) mounted near the GPS antenna or the navigation unit.

1. Clear the hard error code (see page 23-249).

2. Turn the ignition switch to LOCK (0), and then back to ON (II).

3. Go into the Diagnostic Menu, and select the Self-Diagnosis Mode in the Select Diagnosis items menu (see page 23-272).

4. Select the System Links, then select the GPS Ant.

   Is Antenna OK indicated?

   YES—Intermittent failure, the system is OK at this time.■

   NO—Go to step 5.

5. Turn the ignition switch to LOCK (0).

6. Check for poor connections at navigation unit connector H (2P).

   Is the connection OK?

   YES—Replace the GPS antenna (see page 23-333). ■

   NO—Repair the poor connection.■

DTC Troubleshooting (cont'd)

DTC 2702: GPS Diag: Receiver in Navi ECU

NOTE:
- Check the vehicle battery condition first.
- Before you troubleshoot, make sure to follow the general troubleshooting information (see page 23-241).
- Make sure the vehicle is parked outside, away from buildings.
- Check for electronic aftermarket accessories (possibly hidden) mounted near the GPS antenna or the navigation unit.

1. Clear the hard error code (see page 23-249).

2. Turn the ignition switch to LOCK (0), and then back to ON (II).

3. Go into the Diagnostic Menu, and select the Self-Diagnosis Mode in the Select Diagnosis items menu (see page 23-272).

4. Select the System Links, then select the GPS Ant.

   Is Receiver in Navi ECU OK indicated?

   YES—Intermittent failure, the system is OK at this time.■

   NO—Replace the navigation unit (see page 23-330). ■

DTC 2703: Aircon Diag

NOTE:
- Check the vehicle battery condition first.
- Check for B-CAN DTCs and resolve them before troubleshooting.
- Before you troubleshoot, make sure to follow the general troubleshooting information (see page 23-241).
- DTC 2703 can be stored when the ignition switch is at ACCESSORY (I). With the ignition switch is in ACCESSORY (I), the climate control unit is turned off and the navigation unit loses communication and stores DTCs. Therefore, there is a possibility that the system is normal even DTC 2703 is stored. Check system links (see page 23-272) with the engine running, and if it shows normal, the system is OK at this time. If not, do this troubleshooting.

1. Clear the hard error code (see page 23-249).

2. Turn the ignition switch to LOCK (0), and then back to ON (II).

3. Go into the Diagnostic Menu, and select the Self-Diagnosis Mode in the Select Diagnosis Items menu (see page 23-272).

4. Check the System Links.

   Is the Aircon icon red?

   YES—Go to step 5.

   NO—Intermittent failure, the system is OK at this time.■

5. Turn the ignition switch to LOCK (0).

6. Disconnect navigation unit connector D (12P).

7. Connect navigation unit connector D (12P) terminals No. 5, No. 6, and No. 12 with a jumper wire.

NAVIGATION UNIT CONNECTOR D (12P)

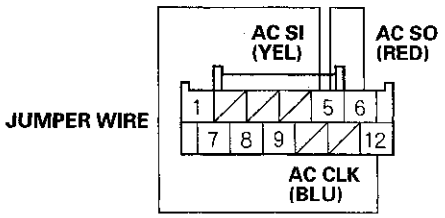

Wire side of female terminals

8. Turn the ignition switch to ON (II).

9. Press the RECIRCULATION and OFF buttons.

   Does the RECIRCULATION indicator turn on?

   YES—Replace the navigation unit (see page 23-330). ■

   NO—Go to step 10.

10. Turn the ignition switch to LOCK (0), then disconnect the jumper wire.

11. Disconnect climate control unit connecter A (32P).

12. Connect climate control unit connector A (32P) terminals No. 28, No. 29, and No. 30 with a jumper wire.

CLIMATE CONTROL UNIT CONNECTOR A (32P)

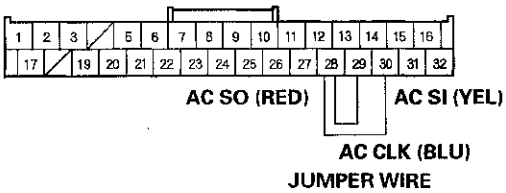

Wire side of female terminals

13. Check for continuity between navigation unit connector D (12P) terminals No. 5 and No. 6, then between terminals No. 5 and No. 12.

NAVIGATION UNIT CONNECTOR D (12P)

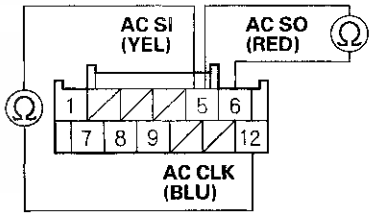

Wire side of female terminals

Are there continuity?

YES—Go to step 14.

NO—Repair open in the wire(s) between the navigation unit and the climate control unit. ■

14. Disconnect the jumper wire.

(cont'd)

DTC Troubleshooting (cont'd)

15. Check for continuity between body ground and navigation unit connector D (12P) terminals No. 5, No. 6, and No. 12 individually.

NAVIGATION UNIT CONNECTOR D (12P)

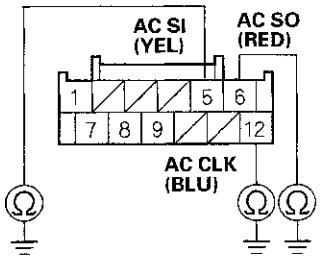

Wire side of female terminals

Is there continuity?

YES—Repair short to body ground in the wire(s) between the navigation unit and the climate control unit. ■

NO—Go to step 16.

16. Check for continuity between the terminal of navigation unit connector D (12P) according to the table.

From terminal	To terminals
D5 (YEL)	D6 (RED), B12 (BLU)
D6 (RED)	D12 (BLU)

NAVIGATION UNIT CONNECTOR D (12P)

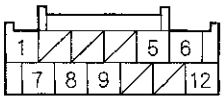

Wire side of female terminals

Is there continuity?

YES—Repair short in the wire(s) between the navigation unit and the climate control unit. ■

NO—Go to step 17.

17. Turn the ignition switch to ON (II).

18. Measure the voltage between body ground and navigation unit connector D (12P) terminals No. 5, No. 6, and No. 12 individually.

NAVIGATION UNIT CONNECTOR D (12P)

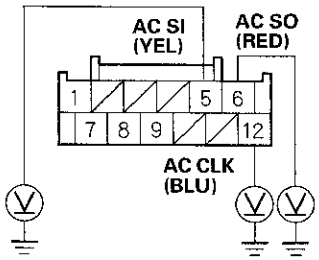

Wire side of female terminals

Is there voltage above 0.2 V?

YES—Repair short to power in the wire(s) between the navigation unit and the climate control unit. ■

NO—Replace the climate control unit (see page 21-98). ■

DTC 2705: HFL Diag

NOTE: Before you troubleshoot, make sure to follow the general troubleshooting information (see page 23-241).

1. Clear the hard error code (see page 23-249).

2. Turn the ignition switch to LOCK (0), and then back to ON (II).

3. Go into the Diagnostic Menu, and select the Self-Diagnosis Mode in the Select Diagnosis items menu (see page 23-272).

4. Select the System Links.

   Is the HFL icon red?

   YES—Go to step 5.

   NO—Intermittent failure, the system is OK at this time. ■

5. Turn the ignition switch to LOCK (0).

6. Connect the HDS to the DLC (see page 23-335).

7. Clear the DTCs with the HDS.

8. Turn the ignition switch to LOCK (0), and then back to ON (II).

9. Check for DTCs with the HDS.

   Are there any HFL DTCs indicated?

   YES—Do the HFL DTC troubleshooting. ■

   NO—Go to step 10.

10. Turn the ignition switch to LOCK (0).

11. Disconnect navigation unit connector B (24P).

12. Disconnect the HandsFreeLink control unit 28P connector.

(cont'd)

DTC Troubleshooting (cont'd)

13. Connect HandsFreeLink control unit 28P connector terminals No. 6 and No. 7 with a jumper wire, then connect the terminals No. 20 and No. 21 with a jumper wire.

HANDSFREELINK CONTROL UNIT 28P CONNECTOR

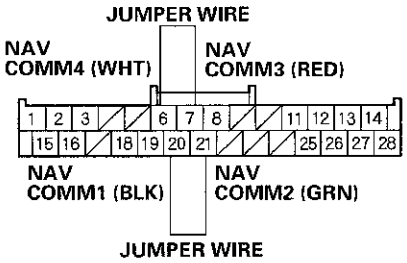

Wire side of female terminals

14. Check for continuity between navigation unit connector B (24P) terminals No. 11 and No. 23 then check for continuity between terminals No. 12 and No. 24.

NAVIGATION UNIT CONNECTOR B (24P)

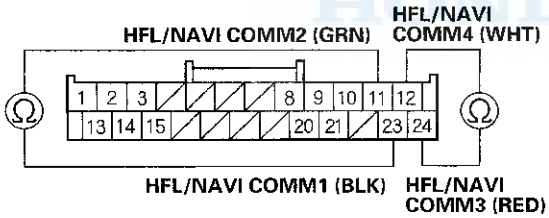

Wire side of female terminals

Is there continuity?

YES—Go to step 15.

NO—Open in the wire between the navigation unit and the HandsFreeLink control unit. Replace the affected shielded harness. ■

15. Disconnect the jumper wire.

16. Check for continuity between the terminals of navigation unit connector B (24P) according to the table.

From terminal	To terminals
B11 (GRN)	B12 (WHT), B23 (BLK), B24 (RED)
B12 (WHT)	B23 (BLK), B24 (RED)
B23 (BLK)	B24 (RED)

NAVIGATION UNIT CONNECTOR B (24P)

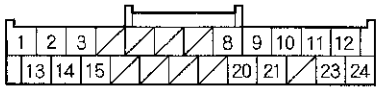

Wire side of female terminals

Is there continuity?

YES—Short in the wires between the navigation unit and the HandsFreeLink control unit. Replace the affected shielded harness. ■

NO—Go to step 17.

17. Check for continuity between navigation unit connector B (24P) and body ground according to the table.

Navigation unit connector	Wire color
B11	GRN
B12	BLK
B23	WHT
B24	RED

NAVIGATION UNIT CONNECTOR B (24P)

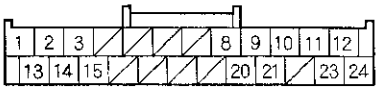

Wire side of female terminals

Is there continuity?

YES—Short to body ground in the wires between the navigation unit and the HandsFreeLink control unit. Replace the affected shielded harness. ■

NO—Replace the HandsFreeLink control unit (see page 23-362). ■

DTC 2706: Gyro Diag: ECU Temp xx ℃

NOTE:
- Before you troubleshoot, make sure to follow the general troubleshooting information (see page 23-241).
- Do this test only when the dash temperature is between −4 ℉ (−20 ℃) and 158 ℉ (70 ℃).

1. Clear the hard error code (see page 23-249).
2. Turn the ignition switch to LOCK (0), and then back to ON (II).
3. Check for the hard error code (see page 23-248).

   Is DTC 2706 indicated?

   YES—Replace the navigation unit (see page 23-330). ■

   NO—Intermittent failure, the system is OK at this time. ■

DTC Troubleshooting (cont'd)

DTC 2707: MIC Diag

NOTE: Before you troubleshoot, make sure to follow the general troubleshooting information (see page 23-241).

1. Clear the hard error code (see page 23-249).
2. Turn the ignition switch to LOCK (0), and then back to ON (II).
3. Go into the Diagnostic Menu, and select the Self-Diagnosis Mode in the Select Diagnosis items menu (see page 23-272).
4. Select the System Links.

   Is the Mic icon red?

   YES—Go to step 5.

   NO—Go to step 8.
5. Turn the ignition switch to LOCK (0).
6. Check for poor connections or loose terminals at the HandsFreeLink control unit 28P connector, the HFL-navigation microphone 3P connector, and navigation unit B (24P) connector.

   Are the connections OK?

   YES—Go to step 7.

   NO—Repair the poor connections or loose terminals.■
7. Check for DTCs with the HDS.

   Is DTC B1775 or B1776 indicated?

   YES—Troubleshoot the indicated DTC.■

   NO—Replace the HFL-navigation microphone (see page 23-333).■
8. Select the Mic in the System Links.
9. Press the navigation TALK button on the steering wheel switch, then check the Mic Level (see page 23-286).

   Is the microphone level OK?

   YES—Intermittent failure, the system is OK at this time.■

   NO—Replace the HFL-navigation microphone (see page 23-333).■

Symptom Troubleshooting

No picture is displayed

NOTE:
- Check the vehicle battery condition first.
- Make sure that the correct DVD color and version are installed.
- Check any official Honda service website for more service information about the navigation system.
- For problems with the rearview camera, do the rearview camera does not come on or work properly troubleshooting.
- Check the connectors for poor connections or loose terminals.
- Before troubleshooting, make sure you have the navigation system anti-theft code.

1. Check the No. 23 (10 A) fuse in the under-hood fuse/relay box and the No. 35 (7.5 A) fuse in the under-dash fuse/relay box, and reinstall the fuse if it is OK.

   Is the fuse OK?

   YES—Go to step 2.

   NO—Replace the fuse, and recheck. ■

2. Turn the ignition switch to ON (II).

3. Operate the radio and listen to the audio.

   Can you hear the audio?

   YES—Go to step 4.

   NO—Refer to audio system troubleshooting. ■

4. Turn the ignition switch to LOCK (0).

5. Remove the navigation unit (see page 23-330).

6. Measure the voltage between navigation unit connector A (24P) terminal No. 24 and body ground.

NAVIGATION UNIT CONNECTOR A (24P)

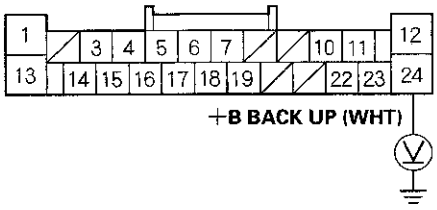

Wire side of female terminals

   Is there battery voltage?

   YES—Go to step 7.

   NO—Repair open in the wire between the under-dash fuse/relay box and the navigation unit. ■

7. Turn the ignition switch to ON (II).

8. Measure the voltage between navigation unit connector A (24P) terminal No. 14 and body ground.

NAVIGATION UNIT CONNECTOR A (24P)

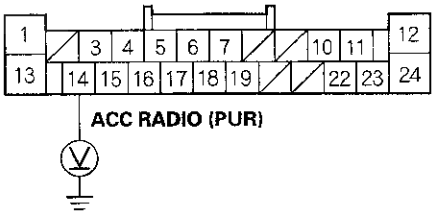

Wire side of female terminals

   Is there battery voltage?

   YES—Go to step 9.

   NO—Repair open in the wire between the under-dash fuse/relay box and the navigation unit. ■

(cont'd)

Symptom Troubleshooting (cont'd)

9. Measure the voltage between navigation unit connector A (24P) terminal No. 12 and body ground, and between navigation unit connector C (8P) terminal No. 4 and body ground.

NAVIGATION UNIT CONNECTOR A (24P)

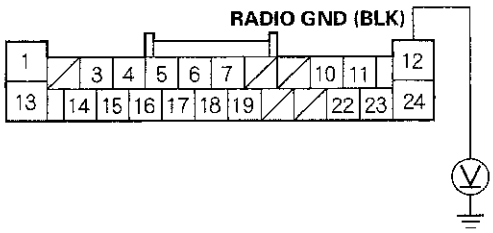

Wire side of female terminals

NAVIGATION UNIT CONNECTOR C (8P)

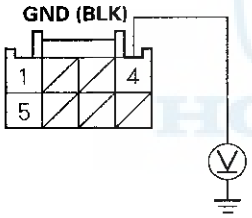

Wire side of female terminals

Is there less than 0.1 V?

YES—Replace the navigation unit (see page 23-330). ■

NO—Repair open in the wire between the navigation unit and body ground (G504, G505). ■

Picture has lines/rolls/other issues or is an odd color

Diagnostic Test: Monitor Check

NOTE:
- Check the vehicle battery condition first.
- Make sure that the correct DVD color and version are installed.
- Check any official Honda service website for more service information about the navigation system.
- Check the navigation screen settings for brightness, contrast, black level and the color screen for map color and menu color.
- Check the connectors for poor connections or loose terminals.
- Before troubleshooting, make sure you have the navigation and audio system anti-theft codes.

1. Check for electronic aftermarket accessories (possibly hidden) mounted near the navigation unit.

   Are there any electronic accessories?

   YES—Disable the accessories, and recheck. ■

   NO—Go to step 2.

2. Turn the ignition switch to ON (II).

3. Start up the navigation picture.

   Is the picture scrolling horizontally (left to right or right to left)?

   YES—Go to step 5.

   NO—Go to step 4.

4. Go into the Detail Information & Settings, select Monitor Check, and use RGB Color diagnostic under Monitor Check (see page 23-277).

   Are the red, green, and blue colored circles shown?

   YES—Go to step 5.

   NO—Replace the navigation unit (see page 23-330). ■

5. Turn the ignition switch to LOCK (0), then turn to ON (II), and observe the navigation picture.

   Did the image improve?

   YES—Check for sources of electrical noise, such as poor battery connection, alternator, defective battery, aftermarket accessories or cell phone, and poor pin fits at the navigation unit. ■

   NO—Replace the navigation unit (see page 23-330). ■

Navigation display buttons do not work or respond properly

NOTE:
- Check the vehicle battery condition first.
- Always make sure that the correct DVD color and version are installed.
- Check any official Honda service website for more service information about the navigation system.
- Always check the connectors for poor connections or loose terminals.
- Before troubleshooting, make sure you have the navigation and audio system anti-theft codes.

1. Turn the ignition switch to ON (II).

2. Go into the Detail Information & Settings, select Unit Check, and use Hard Key test under Unit Check (see page 23-280).

   Does the navigation unit buttons work properly?

   YES—The system is OK at this time. ■

   NO—Replace the navigation unit (see page 23-330). ■

Symptom Troubleshooting (cont'd)

GPS icon is white or not shown

Diagnostic Test: Self-Diagnosis Mode

NOTE:
- Check the vehicle battery condition first.
- With good reception, the icon is normally green.
- Make sure the GPS antenna is plugged in.
- Check for any aftermarket accessories or metallic window tinting that may be interfering with the GPS signal.
- Make sure the vehicle is parked outside, away from buildings.
- Refer to GPS Information (see page 23-287) for realtime satellite reception display.

1. Check for aftermarket metallic window tint on the rear window and electronic aftermarket accessories (possibly hidden) mounted near the GPS antenna or the navigation unit.

   Is there aftermarket metallic window tint or electronic accessories?

   YES—Remove tint or the accessories, and recheck.■

   NO—Go to step 2.

2. Turn the ignition switch to ON (II).

3. Go into the Self-Diagnosis Mode, and use the System Links diagnostic (see page 23-272) to check the GPS antenna.

   Is the GPS Ant icon red?

   YES—Check for a kinked, crushed, or disconnected GPS antenna wire. If the icon is still red, replace the GPS antenna (see page 23-333).■

   NO—Check that nothing is blocking the GPS antenna located under the package shelf and recheck. Substitute a known-good GPS antenna (see page 23-333), and recheck.■

   - If the symptom is gone, replace the GPS antenna (see page 23-333).■
   - If the symptom is still present, substitute a known-good navigation unit (see page 23-330), and recheck. If the symptom is gone, replace the original navigation unit.

Voice guidance cannot be heard, is broken up, or there is static

Diagnostic Test: Self-Diagnosis Mode

NOTE:
- Check the vehicle battery condition first.
- Check the navigation volume level (see Owner's Manual).
- Check the connectors for poor connections or loose terminals.
- If the Hard Error Code is stored, check the Hard Error Code troubleshooting first.
- Make sure that the correct DVD color and version are installed.
- Inspect the DVD for dirt or damage.
- Before troubleshooting, make sure you have anti-theft codes for the audio system and the navigation system.
- After troubleshooting, enter the anti-theft codes for the audio system and the navigation system.

1. Turn the ignition switch to ON (II).

2. Press the SET-UP button.

3. Check the volume and voice feedback setting for the navigation system in set-up.

   Is either set to OFF?

   YES—Set the voice feedback to ON, and select an audible level for the volume.■

   NO—Go to step 4.

4. Check the audio system operation.

   Can you hear the audio?

   YES—Go to step 5.

   NO—Troubleshoot audio system.■

5. Select the Self-Diagnosis mode.

6. Check for error code to the Error History.

   Is the Hard Error Code stored?

   YES—Refer to the Hard Error Code troubleshooting.■

   NO—Replace the navigation unit (see page 23-330).■

Voice control does not work/respond

Diagnostic Test: Mic Level

NOTE:
- Check the vehicle battery condition first.
- Make sure that the correct DVD color and version are installed.
- Check any official Honda service website for more service information about the navigation system.
- Check the connector for poor connection or loose terminals.
- Before troubleshooting, make sure you have the audio system and the navigation system anti-theft codes.
- After troubleshooting, enter the anti-theft codes for the audio system and the navigation system.

Before assuming that a voice complaint is hardware related, ensure that the voice control system is being operated correctly.

- Make sure you are on the correct screen when trying to issue a voice command. For instance, the command "Find the nearest Italian Restaurant" only works on a Map screen.
  (See the Navigation System Manual for a complete list of allowed voice commands for the information being displayed.)
- Close the windows, moonroof, and doors.
- Set the fan speed to low (1 or 2).
- Adjust the air flow from the air conditioning vents so that they do not blow against the microphone on the ceiling.
- Pause after pressing the navigation TALK button, then give a voice command clearly in a natural speaking voice. If the system cannot recognize your command, speak louder.
- If the microphone picks up voices other than yours, the system may not interpret your voice commands correctly.
- If you speak a command with something in your mouth, or your voice is too husky, the system may misunderstand your command.
- Compare the system operation with a known-good vehicle. Have more than one person test the system operation. If the like known-good vehicle performs the same, if is a characteristic of the system.

1. Turn the ignition switch to ON (II).

2. Go into the Self-Diagnosis Mode select, Mic Icon Menu, and use the Mic Level test under Functional Setup (see page 23-284) to check the operation of the navigation TALK and navigation BACK buttons.

   Are the navigation TALK and navigation BACK buttons operational?

   YES—Go to step 10.

   NO—Go to step 3.

3. Turn the ignition switch to LOCK (0).

4. Do the voice control switch test (see page 23-332).

   Is the voice control switch OK?

   YES—Go to step 5.

   NO—Replace the HFL-voice control switch. ■

5. Disconnect the HFL-voice control switch 5P connector and navigation unit connector D (12P).

6. Check for continuity between body ground and navigation unit connector D (12P) terminal No. 1.

NAVIGATION UNIT CONNECTOR D (12P)

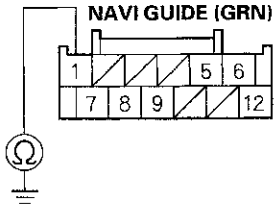

Wire side of female terminals

Is there continuity?

YES—Repair short to body ground in the wire between the navigation unit and the voice control switch, or replace the cable reel. ■

NO—Go to step 7.

(cont'd)

Symptom Troubleshooting (cont'd)

7. Check for continuity between navigation unit connector D (12P) terminal No. 1 and HFL-voice control switch 5P connector terminal No. 2.

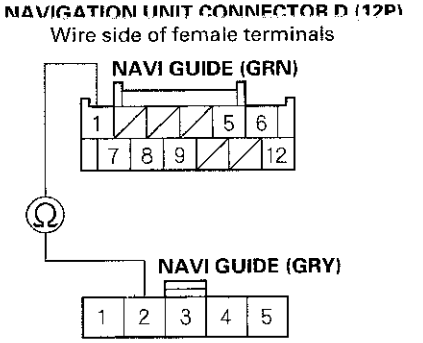

Is there continuity?

YES—Go to step 8.

NO—Repair open in the wire between the navigation unit and the HFL- voice control switch, or replace the cable reel. ■

8. Disconnect navigation unit connector A (24P).

9. Check for continuity between navigation unit connector A (24P) terminal No. 5 and HFL-voice control switch 5P connector terminal No. 4.

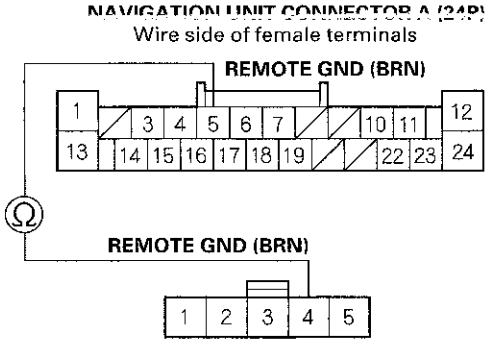

Is there continuity?

YES—Replace the navigation unit (see page 23-330). ■

NO—Repair open in the wire between navigation unit and voice control switch, or replace the cable reel. ■

10. Use the Mic Level diagnostic under Functional Setup (see page 23-284) to check the operation of the microphone.

Is the microphone operational?

YES—Check the operation of the voice control system (see the Navigation System Manual). ■

NO—Go to step 11.

11. Check the HFL DTCs (see page 23-335).

Are there any DTCs indicated?

YES—Repair the indicated DTCs. ■

NO—Substitute a known-good microphone, then reconnect all of the connectors, and recheck. If the symptom/indication goes away, replace the original microphone. If the symptom/indication is still present, replace the navigation unit (see page 23-330). ■

Vehicle position icon constantly leaves road, moves erratically, or is displayed very far from actual vehicle position

NOTE:
- Check the vehicle battery condition first.
- Check that the GPS antenna is plugged in.
- This is not the same condition as when driving off-road (or on a fire or logging road). This condition is caused by a loss of map matching from a bad sensor input. Check for after market window tinting or other objects that can block the GPS signal. Always do the Map matching (see page 23-244) before proceeding with the troubleshooting.
- Make sure that the correct DVD color and version are installed.
- Inspect the DVD for dirt or damage.
- Check any official Honda service website for more service information about the navigation system.
- Check the GPS signal reception in an open area.

1. Check the GPS icon on the navigation screen.

   Is the GPS icon white?

   YES—Do the troubleshooting for GPS icon is white or not shown (see page 23-316). ■

   NO—Go to step 2.

2. Go into the Self-Diagnosis Mode, and use the Yaw Rate diagnosis (see page 23-289) to check the yaw rate sensor.

3. Go into the Self-Diagnosis Mode, and use the Car Status diagnosis (see page 23-290) to check the vehicle speed pulse.

   Are the yaw rate sensor and vehicle speed pulse OK?

   YES—The condition may be normal. Check to see if the condition occurs in the same place in a known-good vehicle. If it does, the problem could be in the database. Go to step 4.

   NO—If the problem is the yaw rate sensor, replace the navigation unit (see page 23-330). If the problem is the vehicle speed pulse, check for an open in the wire between the navigation unit and the PCM (VSP signal). If the wire is OK, substitute a known-good navigation unit and retest. If the problem goes away, replace the original navigation unit. If the problem is still present, ,replace the PCM. ■

4. Substitute a known-good navigation unit, and check to see if the problem occurs in the same place.

   Does the problem occur in the same place?

   YES—The problem is in the database. Report the problem according to the Navigation System Manual under Reporting Errors. ■

   NO—Replace the original navigation unit (see page 23-330). ■

Symptom Troubleshooting (cont'd)

Vehicle icon wanders across the map when driving (does not follow a displayed road) or map vehicle ICON spins

NOTE:
- Check the vehicle battery condition first.
- This is not the same condition as when driving off-road (or on a fire or logging road).
- This condition is caused by a loss of map matching from a bad sensor input. Check for aftermarket or other objects that can block the GPS signal. Always perform Map matching (see page 23-244) before proceeding with the troubleshooting.
- Always check for and resolve all CAN DTCs before troubleshooting the navigation system.
- Verify that the correct navigation unit is installed for this model. Go into the Diagnostic mode and use Version (see page 23-291).
- Make sure that the correct DVD color and version are installed.
- Check for aftermarket metallic window tinting.
- Inspect the DVD for dirt or damage.
- Check any official Honda service website for more service information about the navigation system.
- Before troubleshooting, make sure you have anti-theft codes for the audio system and the navigation system.
- After troubleshooting, enter the anti-theft codes for the audio system and the navigation system.
- Check the DVD for damage or scratches.
- Check for connectors for poor connections or loose terminals.

1. Check the GPS icon on the navigation screen.

   Is the GPS icon white or missing?

   YES—Do the troubleshooting for GPS icon is white or not shown (see page 23-316).■

   NO—Go to step 2.

2. Go into the Self-Diagnostic mode, and use the Yaw Rate diagnosis (see page 23-289) to check the yaw rate sensor.

   Is the yaw rate sensor OK?

   YES—Go to step 3.

   NO—Replace the navigation unit (see page 23-330). ■

3. Go into the Diagnostic mode, and use the Car Status diagnosis (see page 23-290) to check the vehicle speed pulse (VSP) and the BACK signals.

   Are the vehicle speed pulse and the BACK signals OK?

   YES—The problem may be a characteristic of the system. Check to see if the problem occurs in the same place in a known-good vehicle. If it does, the problem could be in the database. Go to step 4.

   NO—
   - If the problem is the vehicle speed pulse, troubleshoot the vehicle speed signal circuit. BLU wire for open or short. If OK, update the PCM (see page 11-236) if it does not have the latest software or substitute a known-good PCM (see page 11-238).
   - If the BACK signal is indicated ON (1), when in any shift lever position other than reverse, troubleshoot the back-up light switch circuit or MICU.■

4. Substitute a known-good navigation unit (see page 23-330), and check to see if the problem occurs in the same place.

   Does the problem occur in the same place?

   YES—The problem is in the database and should be considered a characteristic of the system. Report the problem according to the Navigation System Owner's Manual under Reporting Errors and look for improvements in future databases.■

   NO—Replace the navigation unit (see page 23-330). ■

DVD read error messages

Diagnostic Test: Car Status

NOTE:
- Check the vehicle battery condition first.
- Confirm the correct DVD color and version is installed in the navigation unit (see page 23-245).
- Refer to General Troubleshooting for a list of common DVD screen error messages and the probable causes (see page 23-294).
- Check any official Honda service website for more service information about the navigation system.
- Go into the Diagnostic mode and use the ECU Info diagnostic (see page 23-280) to check the status of the DVD cover.
- Inspect the navigation DVD for scratches or damage.
- The following troubleshooting is for the error message shown on the error messages table (see page 23-294).

1. Check the DVD-ROM reading surface for scratches and finger prints.

   Are there any scratches or finger prints on the DVD-ROM reading surface?

   YES—Clean or replace the DVD-ROM (see page 23-245).■

   NO—If the problem occurs occasionally when the system is cold, this is normal. If the problem occurs frequently when driving, replace the navigation unit (see page 23-330).■

Navigation cannot control HVAC by voice command

NOTE:
- Check the vehicle battery condition first.
- Check the connectors for poor connections or loose terminals.
- Check for and resolve all CAN DTCs before troubleshooting the navigation system.
- If the Hard Error Code stored, check the Hard Error Code troubleshooting first.
- Before troubleshooting, make sure the anti-theft codes for the audio system and the navigation system.
- After troubleshooting, enter the anti-theft codes for the audio system and the navigation system.
- Verify that the correct navigation unit is installed for this model. Go into the Diagnostic mode and use Version (see page 23-291).
- Make sure that the correct DVD color and version are installed.
- Check any official Honda service website for more service information about the navigation system.

1. Connect the HDS to the DLC. Check for B-CAN or F-CAN DTCs in the data list.

   Are there any DTCs in the B-CAN or F-CAN systems?

   YES—Troubleshoot and repair all CAN related DTCs, and then retest.

   NO—Go to step 2.

(cont'd)

Symptom Troubleshooting (cont'd)

2. Turn the ignition switch to ON (II).

3. Select the Self-Diagnosis mode.

4. Check for error code in the Error History.

   Are there any Hard Error Code stored?

   YES—Refer to the Hard Error Code troubleshooting. ■

   NO—Go to step 5.

5. Substitute a known-good climate control unit (see page 21-98), then reconnect all connectors, and retest.

   Does the symptom go away?

   YES—Replace the original climate control unit. ■

   NO—Replace the navigation unit (see page 23-330). ■

System always comes up in in-line diagnostic mode

1. When a navigation unit is powered up for the first time at the factory, the factory diagnosis screen (In Line Diag) appears. Normally the factory performs the steps necessary to verify proper operation and terminate the factory diagnostic. Until the proper confirmation sequence is performed, the screen will appear every time the vehicle is started.

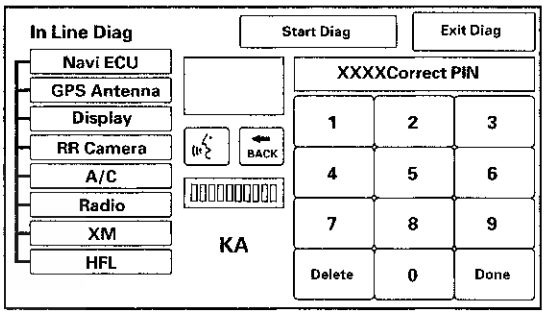

2. Follow the steps to prevent the screen from showing up in the future:

   - Hold down the buttons (Menu, Map/Guide, and Cancel) for about 5 seconds. The Select Diagnosis Items screen appears.
   - Hold down the Map/Guide button for 5—10 seconds. A screen with a Complete button appears.
   - Touch Complete, and then the Return button (the system may re-boot).
   - Restart the vehicle, and confirm normal operation by completing the PDI of the navigation system Service Bulletin.

Display day/night mode does not work or does not work properly

NOTE:
- Check the vehicle battery condition first.
- Check the connectors for poor connection or loose terminals.
- Before troubleshooting, get the navigation system anti-theft code.
- After troubleshooting, enter the navigation system anti-theft code.
- Full brightness on the instrument panel brightness control with the head lights turned on causes the system to stay in the day mode, even when the lights are on.

1. Make sure the instrument panel brightness control is not on full brightness. Turn the headlights on, and adjust the dash brightness to the middle range.

2. Change the day/night mode under Set-up to AUTO, and recheck.

   Does the display change to day and night modes when turning the headlights on and off?

   YES—The system is OK at this time.■

   NO—Go to step 3.

3. Go into the Diagnostic Menu, and use the Car Status test to check for an ILL signal (see page 23-290).

   Is the ILL signal OK?

   YES—Replace the navigation unit (see page 23-330). ■

   NO—Check the ILL+ circuit between the navigation unit and the No. 14 (7.5 A) fuse in the under-dash fuse/relay box.■

System locks up or freezes constantly

NOTE:
- Check the vehicle battery condition first.
- Make sure that the correct DVD color and version are installed.
- Check any official Honda service website for more service information about the navigation system.

1. Start the engine, and turn the ignition switch to LOCK (0), then turn the ignition switch to ON (II).

   Does the system reboot?

   YES—The system is OK at this time.■

   NO—Check the DVD for scratches or damage, and the navigation unit for water damage. If OK, go into the Diagnostic Menu, and do all of the Unit Check tests (see page 23-280). Also check for low battery charge or poor charging system performance.■

Symptom Troubleshooting (cont'd)

Navigation display stays on with ignition switch in LOCK (0)

NOTE:
- Check the connectors for poor connections or loose terminals.
- Before troubleshooting, get the navigation system anti-theft code, then write down the audio presets.
- After troubleshooting, re-enter the anti-theft code, and re-initialize the navigation system, then enter the audio presets.
- Check for aftermarket accessories that use the same power circuit. A feedback can cause this problem.

1. Remove the key from the ignition.

   Does the navigation screen stay on?

   YES—Go to step 2.

   NO—The system is OK at this time.■

2. The vehicle may have been used as a demonstration vehicle at an event like an auto show. In these events, power is often jumpered to the navigation system so that the ignition key is not needed in the vehicle. At the end of the show, the jumper wire may not have been removed. Check the navigation unit connector A (24P) for a non-factory jumper wire in series with the factory cable.

   Is there a jumper wire?

   YES—Remove the jumper wire, and re-test. Return the jumper wire to Tech Line.■

   NO—Go to step 3.

3. Check if the audio unit works.

   Does the audio unit work with the ignition switch is in LOCK (0)?

   YES—Troubleshoot the ACC circuit for a short to power with another circuit.■

   NO—Replace the navigation unit (see page 23-330). ■

Navigation cannot control audio system

NOTE:
- Check the vehicle battery condition first.
- Verify that the correct navigation unit is installed for this model. Go into the Diagnostic mode and use Version (see page 23-291).
- Check the connectors for poor connections or loose terminals.
- Before troubleshooting, make sure you have anti-theft codes for the navigation system.
- After troubleshooting, enter the anti-theft codes for the navigation system.
- Make sure that the correct navigation DVD color and version are installed.
- Inspect the navigation DVD for dirt or damage.
- Check any official Honda service website for more service information about the navigation system.

1. Make sure the anti-theft code for the navigation system is entered.

2. Go into the Diagnostic Menu and use the Navi System Link diagnosis (see page 23-272).

   Is the Radio icon red?

   YES—Do the troubleshooting for the voice guidance cannot be heard (see page 23-316).■

   NO—Go to step 3.

3. Substitute a known-good navigation unit (see page 23-330), and recheck.

   Can the navigation control audio?

   YES—Replace the navigation unit (see page 23-330). ■

   NO—Do the audio system troubleshooting.■

Navigation cannot control XM radio

NOTE:
- Check the vehicle battery condition first.
- Make sure that the correct DVD color and version are installed.
- Check any official Honda service website for more service information about the navigation system.

1. Start the vehicle.

2. Make sure the anti-theft code for the audio system is entered.

3. Go into the Diagnostic mode, and use the System Links diagnosis (see page 23-272).

   Is the XM icon red?

   YES—Do the troubleshooting for the voice guidance cannot be heard (see page 23-316). ■

   NO—Go to step 4.

4. Substitute a known-good navigation unit (see page 23-330).

   Can the navigation system control XM radio?

   YES—Replace the navigation unit (see page 23-330). ■

   NO—Replace the XM receiver (see page 23-234). ■

Navigation frequently asks for anti-theft code and/or needs GPS initialization

NOTE:
- This is often caused by a loss of battery power, a low or pr poor battery condition, or a poor ground.
- Make sure that the correct DVD color and version are installed.
- Check any official Honda service website for more service information about the navigation system.

1. Measure the voltage between navigation unit connector A (24P) terminal No. 24 and body ground.

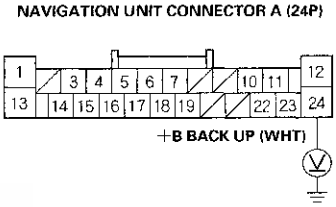

Wire side of female terminals

   Is there battery voltage?

   YES—Go to step 2.

   NO—Repair open in the wire between the under-dash fuse/relay box and the navigation unit. ■

2. Turn the ignition switch to ON (II).

3. Measure the voltage between navigation unit connector A (24P) terminal No. 14 and body ground.

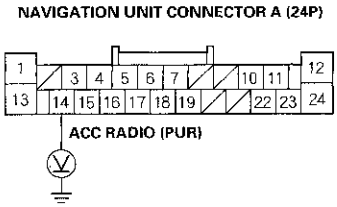

Wire side of female terminals

   Is there battery voltage?

   YES—Go to step 4.

   NO—Repair open in the wire between the under-dash fuse/relay box and the navigation unit. ■

(cont'd)

Symptom Troubleshooting (cont'd)

4. Measure the voltage between navigation unit connector A (24P) terminal No. 12 and body ground, and between navigation unit connector C (8P) terminal No. 4 and body ground.

NAVIGATION UNIT CONNECTOR A (24P)

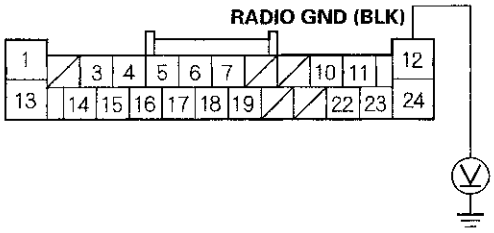

Wire side of female terminals

NAVIGATION UNIT CONNECTOR C (8P)

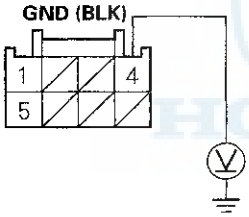

Wire side of female terminals

Is there less than 0.1 V?

YES—Replace the navigation unit (see page 23-330). ■

NO—Repair open in the wire between the navigation unit and body ground (G504, G505). ■

OPEN/CLOSE function of the display does not work

NOTE:
- Check the vehicle battery condition first.
- If the display's Open/Close button does not work, you must manually open the display to obtain the customer's navigation DVD, audio CD, and PC card (see page 23-329).

1. Press the OPEN/CLOSE button.

   Does the display open and/or close normally?

   YES—The system is OK at this time. ■

   NO—Replace the navigation unit (see page 23-330). ■

Navigation display will not close

NOTE: Check the vehicle battery condition first.

1. Check the CD slot. Look for foreign objects, stuck CD, broken or sticking slot.

   Is the CD slot OK?

   YES—Go to step 2.

   NO—Replace the navigation unit (see page 23-330). ■

2. Check the PC card.

   Is the PC card fully seated?

   YES—Go to step 3.

   NO—Reseat the card or remove it. If it still won't close, replace the navigation unit (see page 23-330). ■

3. Press the OPEN/CLOSE button.

   Does the display open and/or close normally?

   YES—The system is OK at this time. ■

   NO—Replace the navigation unit (see page 23-330). ■

Navigation display does not open or opens part way

NOTE: Check the vehicle battery condition first.

1. Press the OPEN/CLOSE button.

   Does the unit beep?

   YES—Go to step 2.

   NO—Replace the navigation unit (see page 23-330). ■

2. Press the OPEN/CLOSE button.

   Does the display open normally?

   YES—The system is OK at this time. ■

   NO—Replace the navigation unit (see page 23-330). ■

HONDA

Symptom Troubleshooting (cont'd)

Navigation system will not accept security code

NOTE:
- Check the vehicle battery condition first.
- The system will not operate without the 4-digit security (anti-theft) code. Follow the this procedure. (After 10 consecutive tries, you must cycle the key to continue trying)
- The Navigation System Diagnosis and Core Return Form is available online, under Job aids, and can be printed out for recording this information. This information will help the Reman facility determine what caused the failure.
- Check the connectors for poor connections or loose terminals.
- Before troubleshooting, make sure you have the anti-theft codes for the navigation system.
- Verify that the correct navigation unit is installed for this model. Go into the Diagnostic mode, and use Version (see page 23-291).
- Make sure that the correct navigation DVD color and version are installed.
- Check any official Honda service website for more service information about the navigation system.

1. Go into the System diagnosis menu (see page 23-280), select Unit check, and then ECU info. A brief diagnostic runs for 20 seconds, and the serial number is displayed.

   Is the serial number displayed?

   YES—Go to step 4.

   NO—Go to step 2.

2. Remove the navigation unit (see page 23-330).

3. Check the serial number on the label on the underside of the navigation unit.

   Is the serial number confirmed on the underside of the navigation unit?

   YES—Go to step 4.

   NO—Replace the navigation unit (see page 23-330). ■

4. Using the serial number, look up the navigation security code in the Interactive Network (click: Service, Vehicle Information, Anti-Theft code Inquiry, and then select Navigation from the Product dropdown box). Enter the serial number.

   Is a 4-digit code displayed on the screen?

   YES—Go to step 5.

   NO—Call the Warranty Department to obtain the code (the telephone number is in the PDI service bulletin). Then Go to step 5.

5. Check that the obtained code works to bypass the code screen in the navigation system.

   Does the code work?

   YES—The system is OK at this time. Return the vehicle to the customer, and give them the anti-theft code. ■

   NO—Go to step 6.

6. Try entering four zeros (0000) in place for the code.

   Do the four zeros work to bypass the code screen?

   YES—Replace the navigation unit, and enter "Security code is 0000" in the problem description field of the core return form. ■

   NO—Replace the navigation unit, and enter "Won't take security code" (as proof, enclose the sticker that contains the Serial number and the Code) in the problem description field of the core return form. ■

The Acura Globe Screen (not the Honda Globe Screen) appears every time the vehicle is started

NOTE: The navigation DVD and the navigation unit are correct for the vehicle, but earlier and possibly later versions of the navigation software may have been installed. When this happens, the software may not be recognized by the navigation unit, and could cause the navigation unit to revert to an Acura model profile.

1. Remove the navigation unit (see page 23-330) and verify that the part number printed on the navigation unit label is the correct one for the year/model vehicle you are working on.

   Is the correct navigation unit installed based on the part number?

   YES—Go to step 2.
   NO—Replace the navigation unit with the correct unit for the year/model vehicle you are working on.■

2. Reinstall the navigation unit.

3. Remove the navigation DVD.

4. Note the software version marked on the navigation DVD label and verify if it is the correct version for the vehicle year/model you are working on by checking any official Honda service website for more service information about the navigation system and navigation software.

   Is the software version marked on the navigation DVD label the correct one for the vehicle year/model you are working on?

   YES—Replace the navigation unit (see page 23-330). ■
   NO—Go to step 5.

5. Obtain the correct version DVD (see page 23-244) and install it.

   Does the navigation system boot-up with the Honda Globe Screen?

   YES—The problem is resolved, troubleshooting is complete.■
   NO—The system still shows an Acura Globe Screen. Replace the navigation unit (see page 23-330).■

CD, DVD, and PC Card Removal/ Installation

If the display Open and Close buttons do not work, you must manually open the display to remove the customer's Navigation DVD, CD, and possibly their PC card. Follow to the steps.

1. Remove the navigation unit from the vehicle (see page 23-330).

2. On the bench, carefully pull the display (A) straight out (about 1/2 inch).

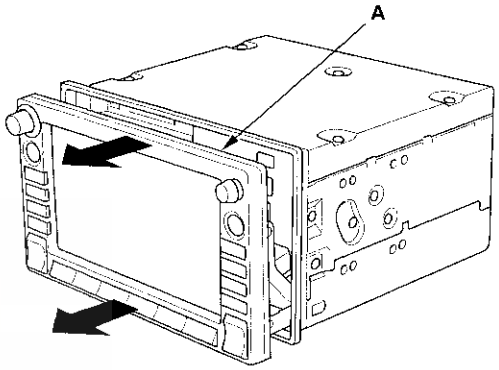

3. Fold down the display as shown.

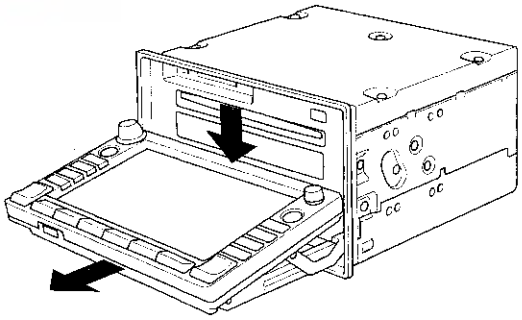

(cont'd)

CD, DVD, and PC Card Removal/ Installation (cont'd)

4. Push the PC card eject button (A) to eject the customer's PC card (if installed). Power is not required for this function.

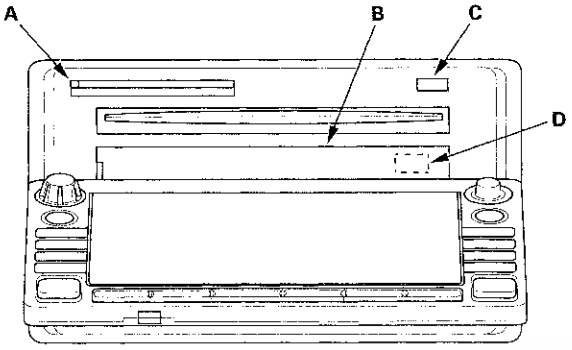

5. Remove the plastic lid (B) over the navigation DVD slot.

6. With the display open, temporarily reconnect the unit in the dash (to power it up).

7. Push the CD eject button (C), and navigation DVD eject button (D) (the button is behind the plastic cover and works only when the unit is powered) and remove the discs (hold the discs by their edges to avoid fingerprints). To avoid scratches, place the navigation DVD and the customer's CD in a jewel case if available.

8. Re-attach the plastic lid that hides the navigation DVD slot.

9. Close the display by first returning the display to the upward position, and then pushing the entire display straight back into the unit.

10. After installing the new navigation unit, re-insert the navigation DVD, the customer's CD, and the PC card.

Navigation Unit Removal/ Installation

SRS components are located in this area. Review the SRS component location (see page 24-11).
Also review the precautions and procedures (see page 24-13) in the SRS section before doing repairs or service.

NOTE:
- Put on gloves to protect your hands.
- Take care not to scratch the dashboard and related parts.
- Lay a workshop towel under the parts when working on them to protect the face panel from scratches or other damage.
- Do not work in a dusty or dirty place.
- Discharge static electricity from your body before and during the work.
- Do not touch the circuit board(s) with your bare hands.
- Do not work with dirty hands.
- Be careful not to fold the flat plate cable.
- Do not touch the terminal connector of the flat plate cable with your bare hands. (If you have touched it, wipe it off thoroughly.)
- Before replacing the navigation unit, make sure to remove the customer's navigation DVD, and their audio CD, or PC card. Remanufactured navigation units do not come with a navigation DVD. Re-install the customer's navigation DVD, audio CD, and audio PC card into the new remanufactured unit. If the navigation display won't open, manually remove the navigation DVD, audio CD, and PC card (see page 23-329).
- If you are replacing the navigation unit, write down the audio presets (if possible), then enter them into the new navigation unit.

1. Make sure you have the 4-digit anti-theft code for the navigation system.

2. Eject the DVD from the original navigation unit. To avoid scratching or damaging the DVD, temporarily place the DVD in jewel case.

3. Remove the subdisplay visor (see page 20-87).

4. Remove the center pocket hole lid and bolts, then pull out the center panel (A).

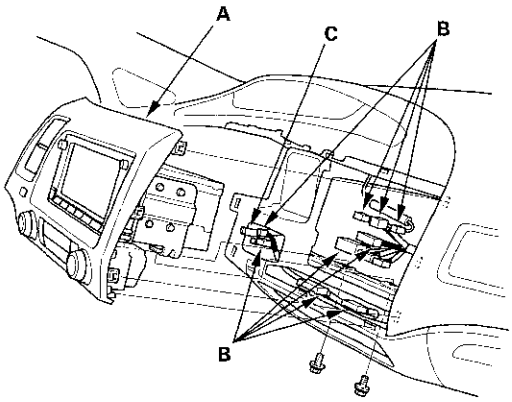

5. Disconnect the connectors (B) and air hose (C), then remove the center panel.

6. Remove the screws, brackets (A), and the navigation unit (B) from the center panel (C).

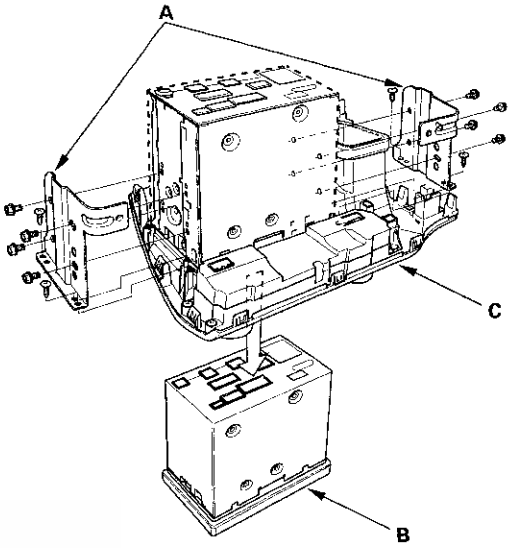

7. Install the navigation unit in the reverse order of removal and make sure all connectors are secure.

8. Turn the ignition switch to ON (II), then reinstall the customer's original DVD, verifying that the DVD is free of scratches or smudges.

9. Check any official Honda service website for more service information about the navigation system.

   NOTE: Simply transferring the DVD from the original navigation unit to the new navigation unit does not assure the correct software for the vehicle is loaded into the new navigation unit. Doing the DVD transfer without applying software patches may cause the new navigation unit to appear to be malfunctioning.

10. Enter the new navigation anti-theft code.

11. Park the vehicle outside, and do the GPS initialization (see page 23-244).

12. Give the new navigation anti-theft code to the customer.

Voice Control Switch Test

1. Remove the voice control switch (see page 23-332).

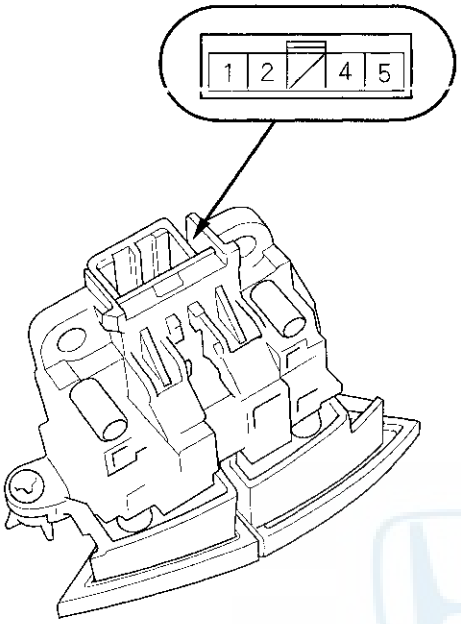

2. Measure the resistance between terminals No. 2 and No. 4 in each switch position according to the table.

Position	Resistance
No button pressed	About 10 kΩ
TALK	About 2.2 kΩ
BACK	About 680 Ω

3. If the resistance is not as specified, replace the voice control switch (see page 23-332).

Voice Control Switch Replacement

SRS components are located in this area. Review the SRS component location (see page 24-11). Also review the precautions and procedures (see page 24-13) in the SRS section before doing repairs or service.

1. Remove the steering wheel (see page 17-6).
2. Remove the audio remote switch (see page 17-7).
3. Install the voice control switch in the reverse order of removal.

GPS Antenna Removal/Installation

1. Remove the navigation unit (see page 23-330).
2. Remove the subdisplay visor (see page 20-87).
3. Remove the wire harness clip (A), screws, and GPS antenna (B).

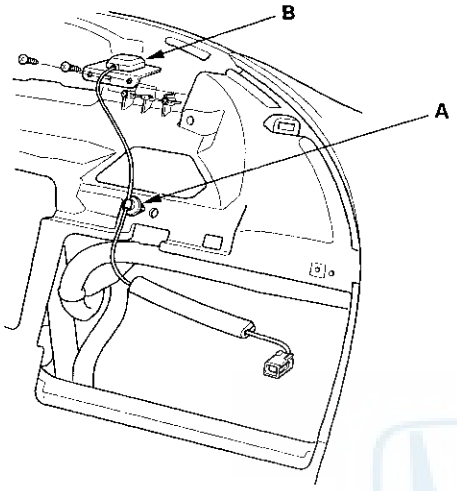

4. Install the antenna in the reverse order of removal.

HFL-Navigation Microphone Removal/Installation

1. Remove the front individual map light lens (A) and bolts.

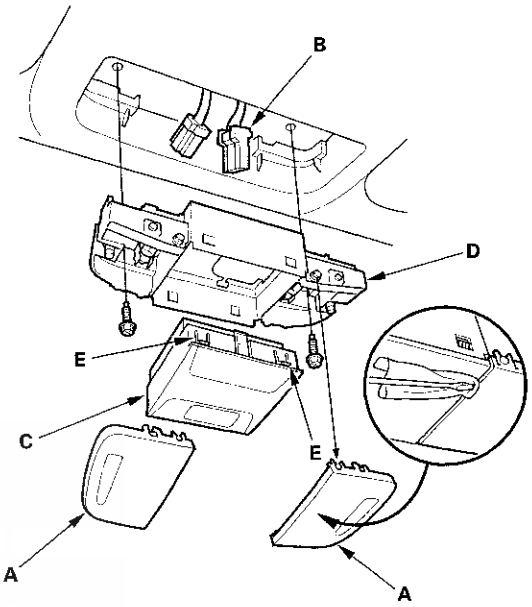

2. Disconnect the 10P connector (B) from the microphone.
3. Carefully pry off the microphone (C) from the map light housing (D) while pressing in on the retaining tabs (E).
4. Install the microphone in the reverse order removal.

Component Location Index

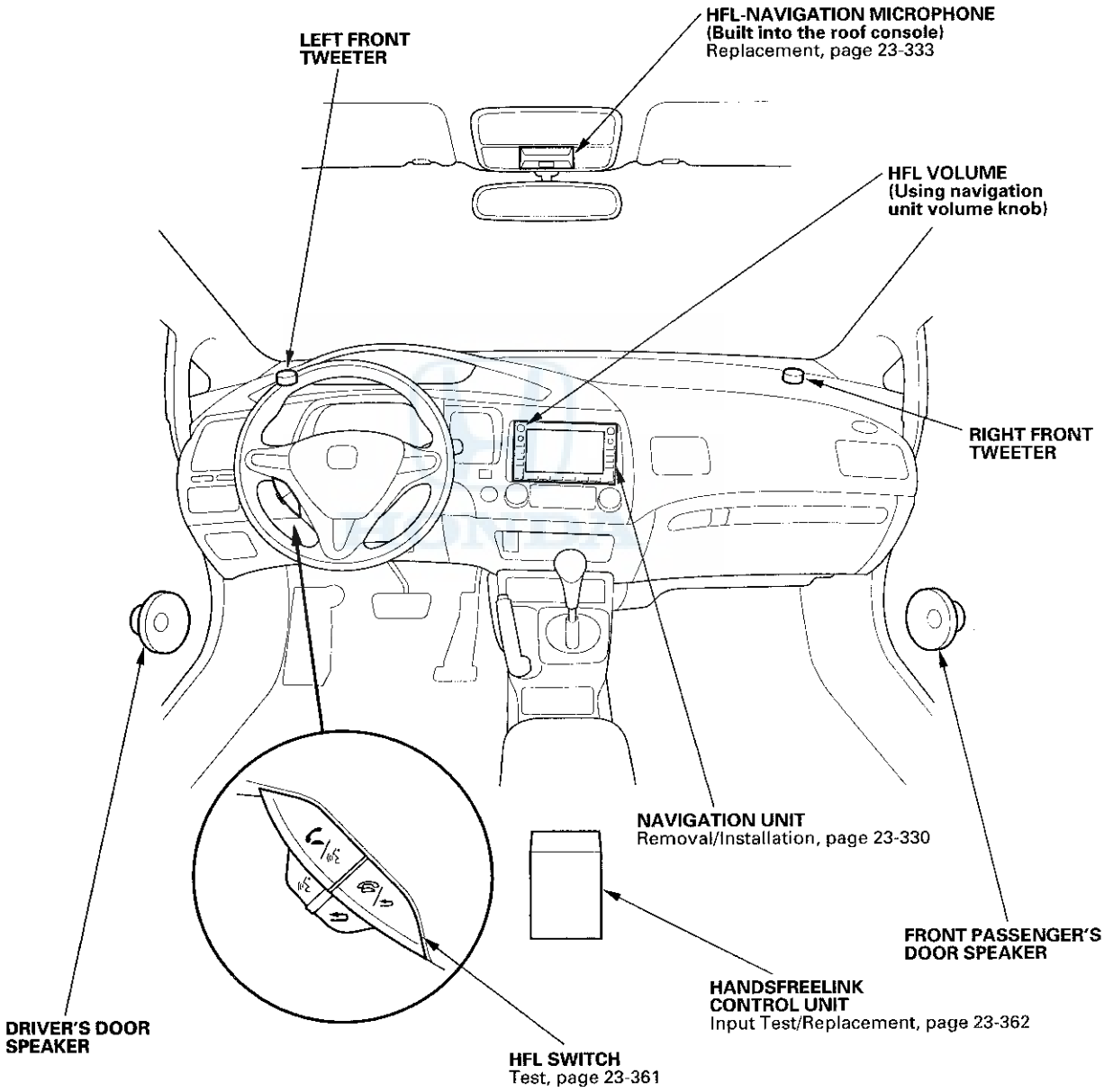

General Troubleshooting Information

How to Check for DTCs with the HDS

NOTE: Check the vehicle battery condition first.

1. Make sure the ignition switch is in LOCK (0).
2. Connect the HDS to the data link connector (DLC) (A) located under the driver's side of the dashboard.

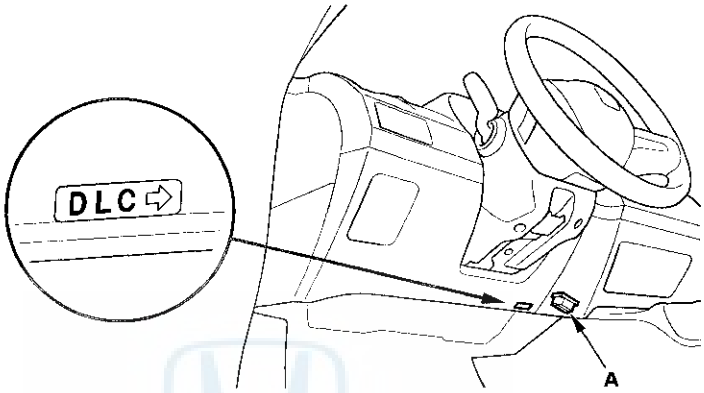

3. Turn the ignition switch to ON (II).
4. Make sure the HDS communicates with the vehicle and the HandsFreeLink control unit. If it doesn't, troubleshoot the DLC circuit (see page 11-213).
5. Select HandsFreeLink in the BODY ELECTRICAL menu.
6. Select DTCs in the HandsFreeLink menu.
7. Check for DTCs. If any DTCs are indicated, write down the DTCs, then go to the indicated DTC troubleshooting. If no DTCs are indicated, refer to symptom troubleshooting.

   NOTE:
   - After troubleshooting, clear the DTCs with the HDS.
   - For specific operations, refer to the user's manual that came with the HDS.

(cont'd)

General Troubleshooting Information (cont'd)

Introduction

The HFL system works only with Honda approved Bluetooth®-enabled cell phones with a hands-free profile. If you are not sure if a particular cell phone is compatible with the HFL system, Honda has a dedicated call center at 888-528-7876 and website handsfreelink.com to answer your questions.

The HFL system allows you to make and receive hands-free calls. It cannot control the phone's performance (call quality and signal strength). For more information about performance and performance problems, refer to Dropped Calls.

Checking Cell Phone Compatibility

The most important step in troubleshooting HFL issues is to identify the model, software version, and wireless carrier of the phone in question. Not all phones with the Bluetooth feature and a hands-free profile are compatible with the Honda HFL system.

Go to handsfreelink.com, and check if the customer phone is approved to work with the Honda HFL system.

NOTE:
- The lists of approved, archived, and currently testing phones are constantly changing, so make sure you view them frequently.
- Phones are added as they are approved.
- Phones can be removed from the approved list if a software bug is discovered that makes the phone incompatible. These phones can be added back to the approved list if the phone manufacturer corrects the bug.
- If the software bug is corrected, a new software version is created and may be listed in the Supported Features section of the phone.
- The software versions that are approved are now being listed in the Software Version field.
- If you cannot access the Honda website, call the HFL call center at 888-528-7876 for further assistance. The call center is open Monday thru Friday from 6:00 a.m. to 6:00 p.m. CT; Saturday from 7:00 a.m. to 6:00 p.m. CT; and Sunday from 8:00 a.m. to 6:00 p.m. CT.

Voice Control Tips and Improving Voice Recognition

To give a voice command to the HFL system, press and release the HFL TALK button. Always wait for the beep, then give your command in a clear, natural voice. The HFL microphone is on the ceiling by the map lights. If the HFL system doesn't recognize your voice command, you'll hear "Pardon." If your command isn't recognized a second time, you'll hear "Please repeat." If your command isn't recognized a third time, the HFL system sends you to its Help menu.

To hear a list of available options at any time, press the HFL TALK button and say "Hands-free help."

The HFL system may have problems recognizing some voices. To improve voice recognition:

- Close the windows and the moonroof.
- Set the fan speed to low (1 or 2) or off.
- Adjust the airflow from the center vents down, so that it's not blowing against the microphone on the ceiling.
- Speak in a clear and natural voice. If the system cannot recognize your command, try speaking louder, in a deeper tone.
- If the background noise is too loud, you may need to speak louder.
- If you speak with something in your mouth, or your voice is too high, the system may not interpret your command correctly.
- Find out if the problem is with one person or with everyone who uses the system. If the system has a problem with only one person's voice, this is a system limitation.

Many issues result from the customer not using the system properly. Make sure the customer is using the HFL buttons and not the navigation buttons. When the HFL TALK button is pressed, the customer hears one audible tone. When the HFL BACK button is pressed, the customer hears two audible tones. Make sure to press the HFL BACK button to exit the HFL main menu after completing a call and before giving any navigation commands.

The HFL system may experience a number recognition issue, such as when a customer says a set of numbers in a group unrecognized by the system. The HFL system understands phone numbers in specific blocks of 1, 3, 4, 7, and 10 numbers. For example, the system understands:

1234567890
123-456-7890
1-2-3-4-5-6-7-8-9-0

The system may become confused if numbers are stated in other blocks, as following:

1234-567-890
12-34-56-78-90
12345-67890
123-4567-890

Navigation Through Menus

To skip a voice prompt, press and release the HFL TALK button while the HFL system is speaking. The system beings listening for your next voice command.

To go back a step in a voice command sequence, press and release the HFL BACK button, or press the HFL TALK button and say "Go back." If you don't say anything while the HFL system is listening for your voice command, it times out and stops voice recognition. The next time you press and release the HFL TALK button, the HFL system begins listening from the point it timed out.

If you've finished or want to stop a voice command sequence at any time, press and release the HFL BACK button, or press and release the HFL TALK button, wait for the beep, and say "Cancel." The next time you press and release the HFL TALK button, the HFL system begins from its main menu. To avoid keeping the audio system muted, press and release the HFL BACK button when you are finished.

NOTE: You can say multiple commands in one sequence, like "Phone setup-pair" after pressing the HFL TALK button.

Pairing a Cell Phone

You must pair an approved Bluetooth-compatible phone to the HFL system before you can make and receive calls. For a current list of approved phones and specific phone pairing instructions for each phone, see Checking Cell Phone Compatibility, go to handsfreelink.com, or call 888-528-7876.

The following procedure works for most phones. If you cannot pair a phone to the HFL system with this procedure, refer to the phone's operating manual, visit handsfreelink.com, or call 888-528-7876.

NOTE:
- You cannot pair a phone while the vehicle is moving.
- Your phone must be in Discovery Mode.
- A maximum of six Bluetooth-compatible phones can be paired to the system.

(cont'd)

General Troubleshooting Information (cont'd)

1. With the phone on and the ignition switch in ACCESSORY (I) or ON (II), press and release the HFL TALK button. After the beep, say "Phone setup." The HFL responds, "Phone setup options are status, pair, edit, delete, and list."

2. Press and release the HFL TALK button. After the beep, say "Pair." The HFL responds, "The pairing process requires operation of your mobile phone. For safety, only perform this function while the vehicle is stopped. State a four-digit code for pairing. Note this code. It will be requested by the phone."

3. Press and release the HFL TALK button. After the beep, say the four-digit code you want to use. This can be any four-digit number you want. For example, say "1, 2, 3, 4." The HFL responds, "1, 2, 3, 4. Is this correct?"

4. Press and release the HFL TALK button. After the beep, say "Yes." The HFL responds, "HFL is now searching for a Bluetooth phone. Make sure the phone you are trying to pair is in Discovery mode." If these steps do not work on the phone you are pairing, refer to the phone's operating manual.

5. Follow the prompts on your phone to get it into its Discovery mode. The phone will search for the HFL. When it comes up, select HandsFreeLink from the list of options displayed on your phone.

6. When asked by the phone, enter the four-digit code from step 3 into your phone. The HFL responds, "A new phone has been found. What would you like to name this phone?"

7. Press and release the HFL TALK button. After the beep, say the name you want to use. For example, say "Tom's phone." The HFL responds, "Tom's phone has been successfully paired. Returning to the main menu."

Pairing Troubleshooting

Many pairing issues are resolved by altering the customer's phone settings.

Bluetooth feature settings must be turned on. Phone manufacturers set the default to disable Bluetooth features to conserve battery life. Cell phones may provide procedures to Temporary Power On Bluetooth, or Power On Bluetooth. Turn the Bluetooth feature on, pair the phone to the vehicle, and confirm the phone is linked. Do this by turning the phone off and back on. Make or receive a call to confirm that the cell phone is successfully paired.

When the phone's Bluetooth feature is on, other handsfree accessories such as earpieces or headsets may automatically reconnect to the phone when you turn on the accessory or move it within range of the cell phone. This results in the phone not connecting to the HFL system when the customer enters the vehicle. You must unlink the hands-free accessory from the phone before the HFL system can reconnect.

Some phones have an Auto Answer setting that functions with a headset. This setting must be turned off or the HFL system cannot accept any incoming calls. When this setting is on, it blocks the HFL system from answering the call, and the call goes to voice mail. This can cause the customer to think that the cell phone is not paired properly.

If the HFL system has six phones paired, it will not tell you that it has reached its maximum, and will not allow you to pair a new phone. To check how many phones are paired, press and release the HFL TALK button. After the beep, say "Phone setup list." The HFL system lists every assigned phone name paired with it, then finishes by saying "The entire list has been read. Returning to the main menu." Count the number of phones listed. If there are six, you must delete one phone before adding a new one.

Pairing Checks

For more information about pairing, refer to the cell phone owner's manual, or go to handsfreelink.com.

1. Is the cell phone compatible with the HFL?
2. Is the Bluetooth feature turned on?
3. Is the customer using the HFL buttons, not the navigation buttons, when pairing?
4. Is the cell phone battery fully charged, and is there good signal strength when pairing?
5. Do a soft reset on the cell phone.
6. If the customer is trying to pair a Blackberry® or Palm Treo™ device, make sure the customer uses the shift key when entering the pass code. If the shift key is not pressed, the customer may be entering letters. The HFL does not recognize letters.

Dropped Calls

Customers may perceive dropped calls as being an HFL system fault, but most dropped calls are from cell phone and cell phone carrier issues. The HFL system does not directly handle the cell phone signal. It allows the cell phone to transmit the cell phone audio over the vehicle's audio system.

Before troubleshooting for dropped calls, confirm the cell phone settings:

- Disable Audio Answer. If Auto Answer is enabled, incoming calls are routed to voice mail.
- Disable Always Ask/Trust, Authorize Device, or similar setting, If these settings are enabled, each time the HFL system attempts to link to the phone, the phone will ask if you want to connect. If you do not allow the connection, the HFL will not operate. The phone must be set to Never Ask, Authorize Device, etc. (based on the phone manufacturer and carrier) for permission. Refer to the cell phone owner's manual for more information.
- Disable Flip Open to Answer. If this setting is enabled, the phone must remain open in the vehicle. If it is closed, the incoming calls are routed to voice mail.

Always confirm with the customer if the number of dropped calls is higher while using the HFL system as opposed to using the cell phone only. Customers often confuse problems with their phone or carrier as a problem with the HFL system. The HFL system cannot control or determine:

- Cellular connection quality.
- Signal strength.
- Cellular coverage.
- Ambient weather conditions that affect cellular signals.

When a customer complains about dropped calls, ask questions about when or where the calls are dropped, such as:

- Do you drive the same route on a regular basis?
- Does the call drop in the same location?
- Where do you keep your cell phone?
- Have you compared the number of dropped calls using the HFL versus making calls from the handset?
- Does your phone have an antenna that needs to be extended?

(cont'd)

General Troubleshooting Information (cont'd)

Many reasons for a dropped call are not related to the HFL system. Here are some causes for dropped calls:

- If the quantity of dropped calls is about the same when the customer uses the HFL system versus the handset, the issue is likely due to the cellular phone or carrier.
- If the phone is equipped with a retractable antenna, it needs to be extended to maximize signal strength.
- If a customer also notices that the calls tend to drop in the same areas, the HFL system may be operating normally, but something about the area diminishes cellular coverage to a point where the call drops.
- Hills or mountains can block or interfere with cellular signals.
- High-rise buildings, bridges, or other large structures may block or interfere with cellular signals.
- Placing the cell phone in a purse, in a metal briefcase, under the seat, in the glove box, or in the trunk can all affect signal reception.
- There are coverage gaps in the cellular service. When driving, a call is typically passed from one tower to another. If the customer drives through an area where there is a coverage gap between towers, the call drops.
- Electrical storms, heavy rain, or overcast conditions interfere with signal strength.
- The cell phone battery's state of change can affect signal reception. A low battery may reduce the phone's ability to boost the antenna's power and function properly, especially in low signal strength areas. Some phone manufacturers trade off signal transmission and reception strength for battery life. As the battery weakens, the signal strength may also weaken. Some cell phones may operate more effectively than others in low signal strength areas, especially with a partially charged battery, and depending on whether or not the retractable antenna is fully extended (if applicable). On these models, make sure the antenna is always extended to maximize signal strength and extend battery life.

Phone Will Not Automatically Connect the HFL

If a customer complains that their cell phone is not automatically connecting to the HFL system when they enter the vehicle, do this:

1. Make sure the Bluetooth feature is turned on in the cell phone.
2. Make sure the cell phone is properly paired to the HFL system.
3. Do a soft reset to the cell phone.
4. Check if the phone has an Authorized Connection or Trusted option.
5. Check the battery and signal strength on the cell phone. Pairing a phone requires optimal signal strength and a nearly full battery.

Incoming Calls

If a customer complains that they cannot receive incoming calls through the HFL system, see if the call is routing to the cell phone instead of the HFL system. An easy way to know if the call is routed to the cell phone is when the customer says, "I can't hear the caller, but they can hear me."

1. Make sure the Bluetooth feature is turned on in the cell phone.
2. Make sure the cell phone is paired to the HFL system and linked.
3. Make sure the answer settings in the cell phone are set to multi-key or any-key answer. If the phone is set to flip open to answer, recommend changing the setting to Any Key or leaving the phone flipped open when using the HFL system.
4. Make sure the Auto Answer feature is turned off in the cell phone.
5. Do a soft reset to the phone.
6. Make sure the battery is fully charged and there is adequate signal strength.
7. Ask the customer if they have set specific ring tones or ringer IDs to specific contacts. If they have, recommend using one standard ring tone for all calls.
8. Make sure the customer is pressing the HFL TALK button and not the HFL BACK button or the navigation buttons.

Outgoing Calls

If a customer says that they cannot place a call using the HFL system, ask if the call was initiated through the HFL system or the cell phone itself.

If the call is placed by the HFL system:

1. Make sure the Bluetooth feature is turned on in the cell phone.

2. Make sure the cell phone is paired to the HFL system and linked.

3. Make sure the customer is pressing the HFL TALK button before each command and going through the calling process correctly.

4. Make sure the customer is pressing the HFL TALK button and not the HFL BACK button or the navigation buttons.

5. Check if the cell phone has an Authorized Connections or Trusted option.

6. Do a soft reset to the cell phone.

If the call is placed by the cell phone:

The call will remain on the handset until you transfer it over to the HFL system. To continue the call on the HFL system, you must use the Transfer command by pressing and releasing the HFL TALK button during an active call and saying "Transfer." The customer can now continue the call using the HFL system.

Clearing the HFL System

NOTE:
- This operation clears the HFL system of all passcode(s), any paired phones, and all names in the HFL phonebook.
- Clearing the HFL system is recommend before selling the vehicle.
- If the system is locked and the pass code is lost or forgotten, see the symptom troubleshooting.

1. Press and release the HFL TALK button. After the beep, say "System clear" and the HFL system responds, "This process will clear all paired phone, clear all entries in the phonebook, clear the passcode and restore all defaults in the system setup. Is this what you would like to do?"

2. Press and release the HFL TALK button. After the beep, say "Yes" and the HFL system responds, "Preparing to clear all paired phone, all phonebook entries, the passcode. This may take up to 2 minutes to complete".

3. Press and release the HFL TALK button. After the beep, say "OK" to proceed, or say "Go back" or "Cancel".

4. If you said "OK", after a short period of time, the HFL system responds, "System has been cleared. Returning to the main menu, the Clearing HFL system procedure is now complete".

(cont'd)

General Troubleshooting Information (cont'd)

Self-diagnostic Function

NOTE: This procedure should be used only if HDS is unavailable.

To run the self-diagnostic function, do the following:

1. Turn the ignition switch to ON (II).
2. Press and hold the HFL BACK button for more than 5 seconds.
3. When the HandsFreeLink system enters the self-diagnostic function, the following will occur.
   - If the system has not completed testing for DTCs, the HandsFreeLink system says "The hands free system test is in progress".
   - If there is no DTC, the HandsFreeLink system says "The hands free system is OK".
   - If there is any DTC, the HandsFreeLink system says "The hands free system needs to be serviced".

NOTE:
- The self-diagnostic function can only be initiated while the HFL is in its idle state.
- The self-diagnostic function is considered start once the 5 seconds press and hold is detected, and ends when the units returns to idle state.

Glossary of Terms

Auto Answer

This cell phone setting forces incoming calls to automatically be answered by the handset. Disable this feature on the phone when using the HFL system, as it may interfere with the HFL system answering incoming calls. Set the phone setting to:
- Send Key
- Any Key
- Multi Key answer

Answer Options

These cell phone settings allow you to select how you would like to answer an incoming call on the handset. The answer option in the phone can affect inbound calls on the HFL system.

Authorized Connection

This cell phone setting allows the phone to connect automatically with the HFL system without prompting the customer for permission to connect. In some instances, it can affect the ability of the phone to properly route sound to the HFL system.

Bluetooth Power

This cell phone function enables or disables the Bluetooth application. When using a hands-free device such as HFL, the Bluetooth application needs to be enabled.

Discovery Mode

You need to have the cell phone in Discovery Mode to allow other devices with Bluetooth capabilities (such as the HFL system) to find the phone during the pairing process.

Downloaded Ringtones

A customer gets these ringtones from an outside source, such as the internet or a mobile phone store.

HFL Buttons

- HFL TALK button (A): Use this button on the steering wheel to give commands. Press the button before a voice command is given.
- HFL BACK button (B): Use this button on the steering wheel to end a call or return to a previous prompt in the HFL menu. Pressing the button twice or holding it down returns you to the HFL main menu.

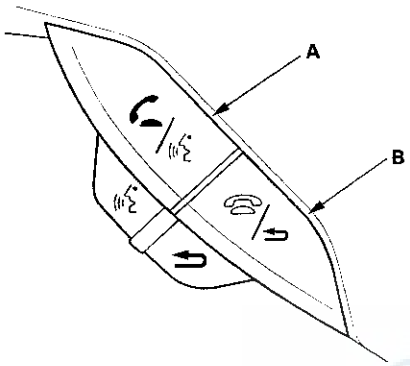

Hard Reset

Hard resets clear the saved settings in the cell phone and restores it to the factory defaults. A hard reset should be done only as a last resort (see the cell phone owner's manual for more information).

Linking

This is when your paired phone is actively ready to use the HFL system. You can pair up to six phones to the HFL system, but only one phone can be linked at a time. If two paired phones are in the vehicle, only the phone that is linked can use the HFL system and functions. The second phone must be used as a normal handset.

Pairing

A description for linking two Bluetooth devices together. In this case, you are linking a cell phone with the HFL system. After the pairing process is complete, the devices are able to recognize each other and communicate wirelessly via Bluetooth.

Soft Reset (Cellular phone)

This helps to restore the basic functions of the phone. To do a soft reset, turn the phone power off, remove and reinsert the cell phone battery, then turn the phone back on.

Software Version

This refers to the software version loaded in the cell phone. The software version that was tested and determined to be compatible with the HFL system may be listed on the HFL website. Not all software versions are compatible with the HFL system.

Standard Ringtone

These ringtones come factory-installed on the cell phone.

DTC Troubleshooting Index

HandsFreeLink Control Unit

DTC	Description	DTC type	Page
B1750	Communication bus line error (Bus-off)	Loss of communication	(see page 22-104)
B1775	Microphone Input/Output Short to Power/Open	Signal error	(see page 23-350)
B1776	Microphone Input/Output Short to Ground/Open	Signal error	(see page 23-351)
B1779	HFL switch (HFL TALK/HFL BACK Buttons) circuit open/ short	Signal error	(see page 23-353)
B1780	HFL switch (HFL TALK/HFL BACK Buttons) circuit short	Signal error	(see page 23-355)
B1792	HandsFreeLink Control unit internal Error	Internal error	(see page 23-356)

HONDA

Symptom Troubleshooting Index

Symptom	Diagnostic procedure	Also check for
HFL does not respond	Control Unit Input Test (see page 23-362)	Check and repair all CAN related DTCs.
The Bluetooth icon in the navigation display is grayed-out	• There is no HFL-compatible phone paired to the vehicle. Pair an approved HFL-compatible phone to the vehicle • Symptom Troubleshooting (see page 23-360)	The phone must be on the Honda list of approved Bluetooth phones and configured correctly. For a current list of approved phones, go to www.handsfreelink.com, or call 888-528-7876 for further assistance. Check the Diagnostic Menu and use the Navi System Link.
The Honda approved Bluetooth phone is having problems pairing to the vehicle	HFL System Troubleshooting (see page 23-347)	The phone must be on the Honda list of approved Bluetooth phones and configured correctly. For a current list of approved phones, go to www.handsfreelink.com, or call 888-528-7876 for further assistance. Check the Diagnostic Menu and use the Navi System Link.
The Honda approved Bluetooth phone cannot use all its functions	HFL System Troubleshooting (see page 23-347)	The phone must be on the Honda list of approved Bluetooth phones and configured correctly. For a current list of approved phones, go to www.handsfreelink.com, or call 888-528-7876 for further assistance. Check the Diagnostic Menu and use the Navi System Link.
The Honda approved Bluetooth phone does not place or receive calls using the HFL system	HFL System Troubleshooting (see page 23-347)	The phone must be on the Honda list of approved Bluetooth phones and configured correctly. For a current list of approved phones, go to www.handsfreelink.com, or call 888-528-7876 for further assistance. Check the Diagnostic Menu and use the Navi System Link.
The customer wants the HFL system reset (all phones and address information cleared from the HFL system)	Clearing the system (see page 23-341)	See the Owner's Manual for additional information.
The HFL system is locked and the pass code has been lost or forgotten	Symptom Troubleshooting (see page 23-357)	
The HFL system does not recognize all voice prompts	Symptom Troubleshooting (see page 23-356)	Also see Voice control tips.
The HFL system speaks in French	See the HFL section in the Owner's Manual for Changing Language	
The address book does not transfer from Honda approved Bluetooth phone to HFL system	There is no HFL compatible phone paired to the vehicle or the approved phone does not support the function. Pair an approved HFL compatible phone to the vehicle	The phone must be on the Honda list of approved Bluetooth phones and configured correctly. For a current list of approved phones, go to www.handsfreelink.com, or call 888-528-7876
The HFL messages cannot be heard or are weak	Symptom Troubleshooting (see page 23-357)	Excessive interior noise (open windows, vents blowing on microphone, etc.).

HandsFreeLink System ('09 models)

System Description

HandsFreeLink Control Unit Connector for Inputs and Outputs

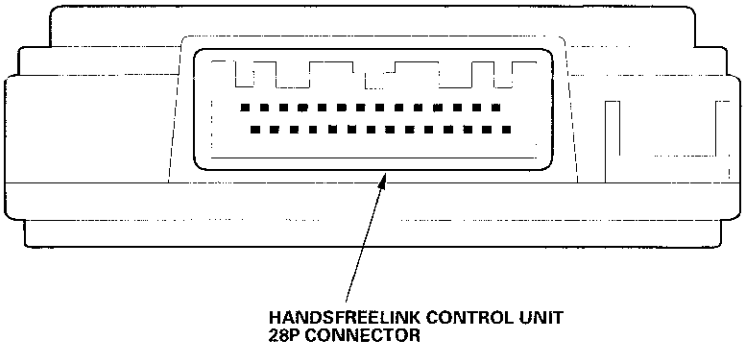

HANDSFREELINK CONTROL UNIT 28P CONNECTOR

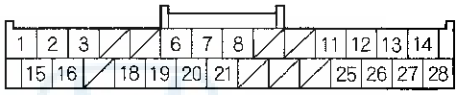

Wire side of female terminals

Cavity	Wire Color	Connects to
1	BLK	Body ground to G501 (GND)
2	BLU	HFL switch (HFL STRG SW)
3	LT BLU	Navigation unit (HFL MUTE)
6	WHT	Navigation unit (HFL/NAVI COMM4)
7	RED	Navigation unit (HFL/NAVI COMM3)
8	GRY*	Shield for terminals No. 6, No. 7, No. 20, and No. 21 (HFL/NAVI COMM SH)
11	BLU	Navigation unit (TELM SIG+)
12	GRY*	Shield for terminals No. 13 and No. 14 (MIC SH)
13	YEL	HFL-navigation microphone (MIC+)
14	BRN	HFL-navigation microphone (MIC−)
15	WHT	No. 23 (10 A) fuse in the under-hood fuse/relay box (+B)
16	PUR	No. 35 (7.5 A) fuse in the under-dash fuse/relay box (ACC)
18	PNK	B-CAN bus communication line (B-CAN)
19	LT GRN	Navigation unit (HFL icon)
20	BLK	Navigation unit (HFL/NAVI COMM1)
21	GRN	Navigation unit (HFL/NAVI COMM2)
25	PNK	Navigation unit (TELM SIG−)
26	GRY*	Shield for terminals No. 11 and No. 25 (TELM SIG SH)
27	GRN	Navigation unit (MIC SIG+)
28	RED	Navigation unit (MIC SIG−)

* : The shielded wires have a heat-shrunk tube insulating the outside of the wire. The color of the insulating tube, typically black or dark gray, may not match the color of the wire listed on the schematic.

HFL System Troubleshooting

NOTE:
- You must be able to duplicate the customer's concern to successfully diagnose the problem.
- Always use the customer's phone.
- Make sure the phone is approved and configured correctly. Online, go to www.handsfreelink.com, or call the HFL support desk at 888-528-7876.

1. Connect the HDS to the DLC.

2. Turn the ignition switch to ON (II).

3. Check for DTCs.

   Are any DTCs indicated?

   YES—Repair the indicated DTCs, and recheck.■

   NO—Go to Step 4.

4. Try to duplicate the problem.

   Can you duplicate the problem?

   YES—Go to Step 5.

   NO—The system is OK at this time.■

5. Pair the phone to a known-good vehicle (same model, year, and trim), and try duplicate the problem.

   Does the phone have the same problem on the known-good vehicle?

   YES—Call the HFL support desk at 888-528-7876 to make sure the phone is configured correctly and has the correct software. If the phone is configured correctly, it is either a characteristic of the HFL system, or a characteristic of the particular approved phone being used. Explain to your customer that this is a system characteristic. Another phone from the approved phone list may give more favorable results.■

   NO—Substitute a known-good HandsFreeLink control unit and recheck. If the problem goes away, replace the original HandsFreeLink control unit.■

Circuit Diagram

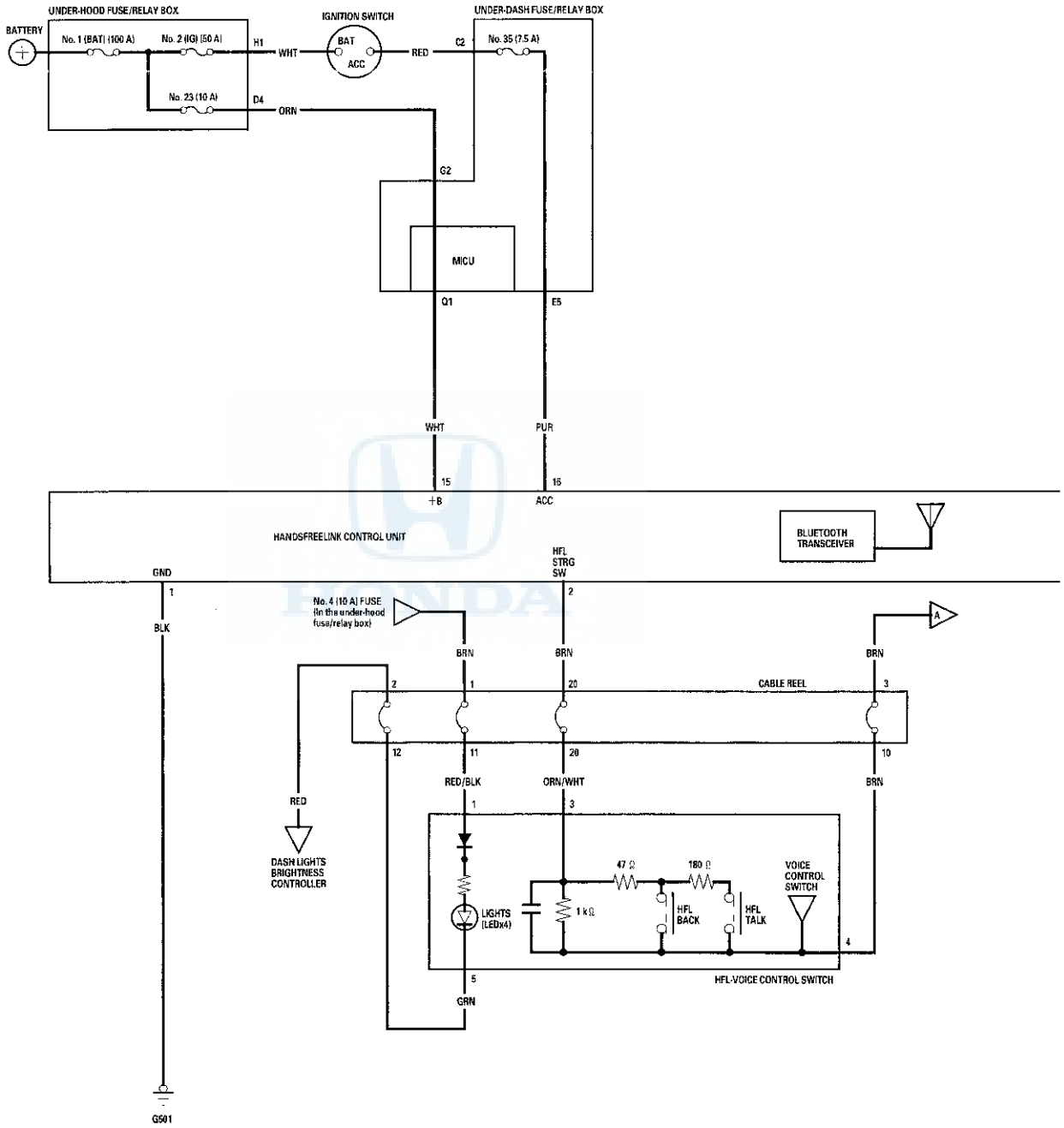

*: The shielded wires have a heat-shrunk tube insulating the outside of the wire. The color of the insulating tube, typically black or dark gray, may not match the color of the wire listed on the schematic.
— — : Shielding

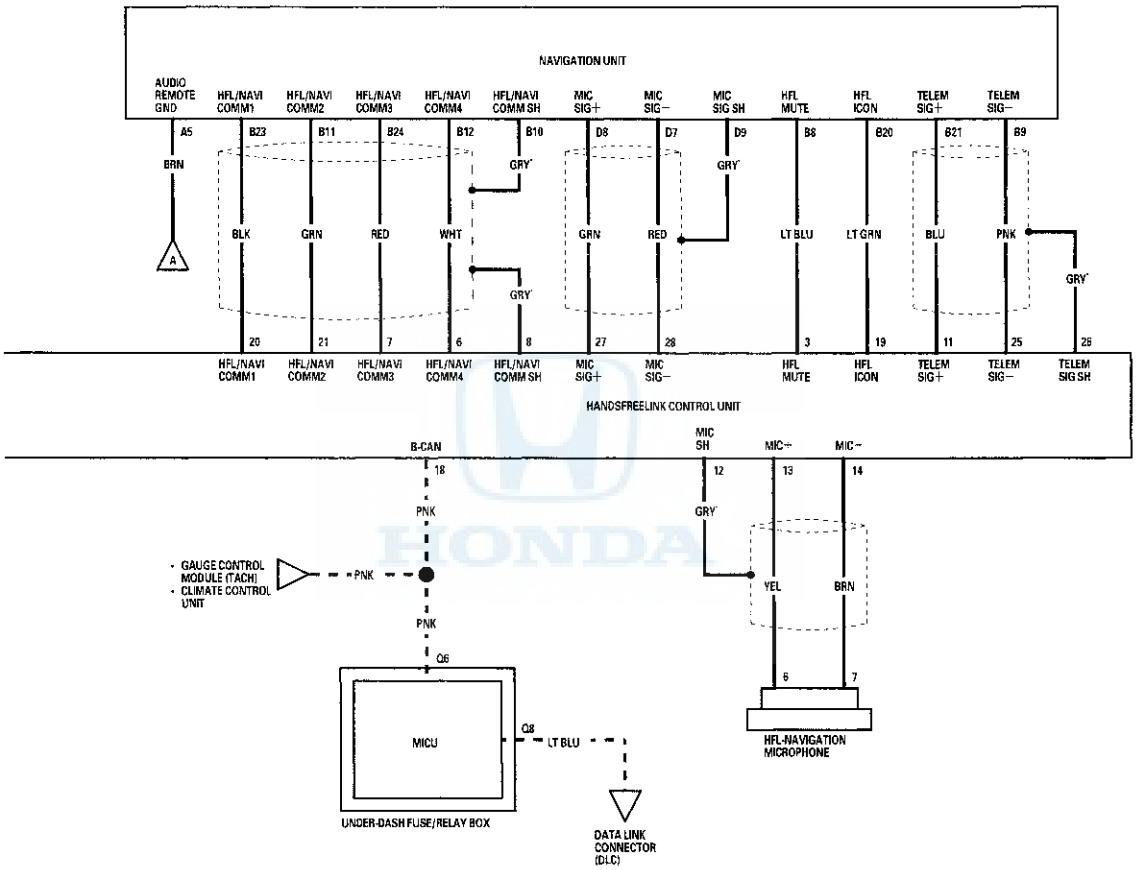

DTC Troubleshooting

DTC B1775: Microphone Input/Output Short to Power/Open

1. Clear the DTCs with the HDS.
2. Turn the ignition switch to LOCK (0), then turn it to ON (II).
3. Check for DTCs with the HDS.

   Is DTC B1775 indicated?

   YES—Go to step 4.

   NO—Intermittent failure, the system is OK at this time.■

4. Turn the ignition switch to LOCK (0).
5. Disconnect the HandsFreeLink control unit 28P connector.
6. Disconnect the HFL-navigation microphone 10P connector.
7. Turn the ignition switch to ON (II).
8. Measure the voltage between HandsFreeLink control unit 28P connector terminal No. 13 and body ground.

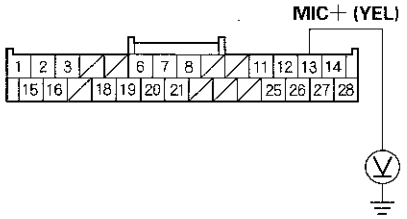

   Is there voltage?

   YES—Short to power in the wire between the HandsFreeLink control unit and the HFL-navigation microphone. Replace the affected shielded harness.■

   NO—Go to step 9.

9. Turn the ignition switch to LOCK (0).
10. Check for continuity between HandsFreeLink control unit 28P connector terminal No. 13 and HFL-navigation microphone 10P connector terminal No. 6.

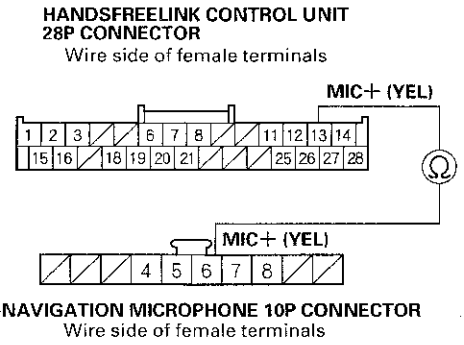

   Is there continuity?

   YES—Go to step 11.

   NO—Repair open in the wire between the HandsFreeLink control unit and the HFL-navigation microphone. Replace the affected shielded harness.■

11. Disconnect navigation unit connector D (12P).

12. Turn the ignition switch to ON (II).

13. Measure the voltage between HandsFreeLink control unit 28P connector terminal No. 27 and body ground.

HANDSFREELINK CONTROL UNIT 28P CONNECTOR

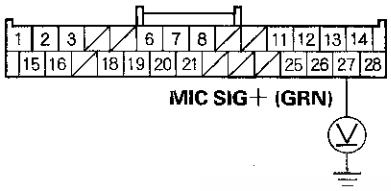

Wire side of female terminals

Is there voltage?

YES—Short to power in the wire between the HandsFreeLink control unit and the navigation unit. Replace the affected shielded harness. ■

NO—Substitute a known-good HFL-navigation microphone (see page 23-333), then recheck. If the symptom goes away, replace the original HFL-navigation microphone. ■

DTC B1776: Microphone Input/Output Short to Ground/Open

1. Clear the DTCs with the HDS.

2. Turn the ignition switch to LOCK (0), then turn it to ON (II).

3. Check for DTCs with the HDS.

   Is DTC B1776 indicated?

   YES—Go to step 4.

   NO—Intermittent failure, the system is OK at this time. ■

4. Turn the ignition switch to LOCK (0).

5. Disconnect the HandsFreeLink control unit 28P connector.

6. Disconnect the HFL-navigation microphone 10P connector.

(cont'd)

DTC Troubleshooting (cont'd)

7. Check for continuity between body ground and HandsFreeLink control unit 28P connector terminals No. 13 and No. 14 individually.

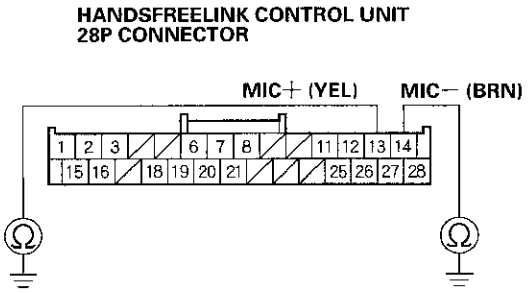

Wire side of female terminals

Is there continuity?

YES—Short to body ground in the wire(s) between HandsFreeLink control unit and HFL-navigation microphone. Replace the affected shielded harness. ■

NO—Go to step 8.

8. Check for continuity between HandsFreeLink control unit 28P connector terminals No. 13 and No. 14.

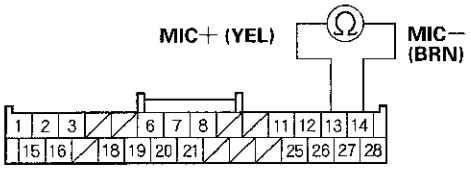

Wire side of female terminals

Is there continuity?

YES—Short in the wire(s) between HandsFreeLink control unit and HFL-navigation microphone. Replace the affected shielded harness. ■

NO—Go to step 9.

9. Disconnect navigation unit connector D (12P).

10. Check for continuity between HandsFreeLink control unit 28P connector terminal No. 27 and body ground.

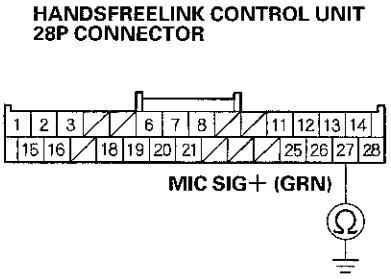

Wire side of female terminals

Is there continuity?

YES—Short to body ground in the wire between the HandsFreeLink control unit and the navigation unit. Replace the affected shielded harness. ■

NO—Substitute a known-good navigation unit (see page 23-330), then recheck. If the symptom goes away, replace the original navigation unit. ■

DTC B1779: HFL Switch (HFL TALK/HFL BACK Buttons) Circuit Open/Short

1. Clear the DTCs with the HDS.

2. Turn the ignition switch to LOCK (0), then start the vehicle, and turn the steering wheel back and forth several times.

3. Check for DTCs with the HDS.

   Is DTC B1779 indicated?

   YES—Go to step 4.

   NO—Intermittent failure, the system is OK at this time.■

4. Turn the ignition switch to LOCK (0).

5. Do the HFL switch test (see page 23-361).

   Is the switch OK?

   YES—Go to step 6.

   NO—Replace the HFL-voice control switch (see page 23-332).■

6. Disconnect the HandsFreeLink control unit 28P connector.

7. Disconnect the HFL-voice control switch 5P connector.

8. Check for continuity between HandsFreeLink control unit 28P connector terminal No. 2 and HFL-voice control switch 5P connector terminal No. 3.

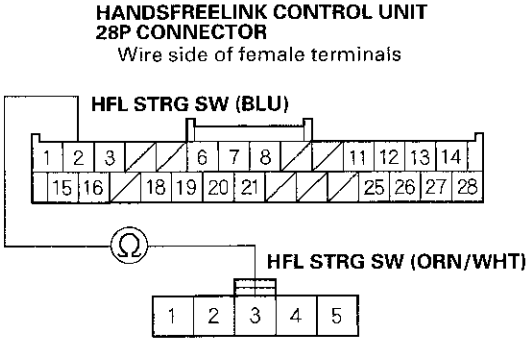

   Is there continuity?

   YES—Go to step 9.

   NO—Repair open in the wire between the switch, cable reel, and the HandsFreeLink control unit.■

(cont'd)

DTC Troubleshooting (cont'd)

9. Turn the ignition switch to ON (II).

10. Measure the voltage between HandsFreeLink control unit 28P connector terminal No. 2 and body ground.

HANDSFREELINK CONTROL UNIT 28P CONNECTOR

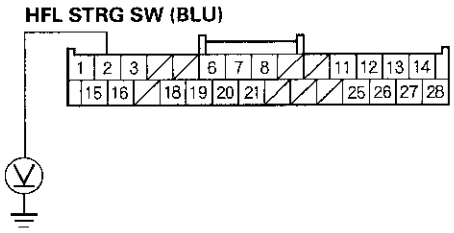

Wire side of female terminals

Is there voltage?

YES—Repair short to power in the wire between the HandsFreeLink control unit and the HFL-voice control switch.■

NO—Go to step 11.

11. Turn the ignition switch to LOCK (0).

12. Disconnect navigation unit connector B (24P).

13. Check for continuity between navigation unit connector A (24P) terminal No. 5 and HFL-voice control switch 5P connector terminal No. 4.

NAVIGATION UNIT CONNECTOR A (24P)
Wire side of female terminals

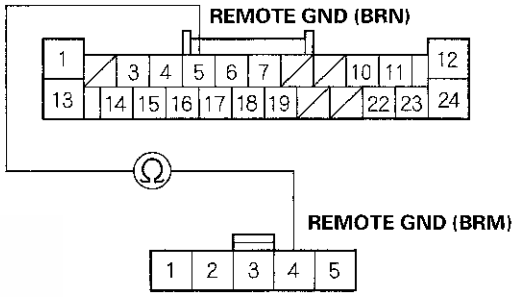

HFL-VOICE CONTROL SWITCH 5P CONNECTOR
Wire side of female terminals

Is there continuity?

YES—Replace the HandsFreeLink control unit.■

NO—Repair open in the wire between the switch, cable reel, and the navigation unit.■

DTC B1780: HFL Switch (HFL TALK/HFL BACK Buttons) Circuit Short

1. Clear the DTCs with the HDS.

2. Turn the ignition switch to LOCK (0), then start the vehicle, and turn the steering wheel back and forth several times.

3. Check for DTCs with the HDS.

   Is DTC B1780 indicated?

   YES—Go to step 4.

   NO—Intermittent failure, the system is OK at this time.■

4. Turn the ignition switch to LOCK (0).

5. Do the HFL switch test (see page 23-361).

   Is the switch OK?

   YES—Go to step 6.

   NO—Replace the HFL-voice control switch (see page 23-332).■

6. Disconnect the HandsFreeLink control unit 28P connector.

7. Disconnect the HFL-voice control switch 5P connector.

8. Check for continuity between HandsFreeLink control unit 28P connector terminal No. 2 and body ground.

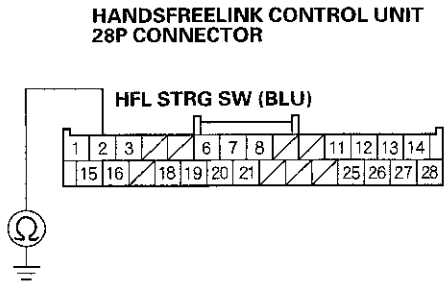

Wire side of female terminals

Is there continuity?

YES—Repair short in the wire between the HandsFreeLink control unit and the HFL-voice control switch.■

NO—Replace the HandsFreeLink control unit (see page 23-362).■

DTC Troubleshooting (cont'd)

DTC B1792: HandsFreeLink Control Unit Internal Error

1. Clear the DTCs with the HDS.
2. Turn the ignition switch to LOCK (0), then turn it to ON (II).
3. Check for DTCs with the HDS.

   Is DTC B1792 indicated?

   YES—Replace the HandsFreeLink control unit (see page 23-362). ■

   NO—Intermittent failure, the system is OK at this time. ■

Symptom Troubleshooting

The HFL system does not recognize all voice prompts

1. Connect the HDS to the DLC.
2. Clear the DTCs with the HDS.
3. Turn the ignition switch to LOCK (0), then turn it to ON (II).
4. Check for DTCs.

   Are there any DTCs indicated?

   YES—Repair the indicated DTCs. ■

   NO—Go to step 5.

5. Check if the problem is duplicated.

   Can the customer's problem be duplicated?

   YES—Go to step 6.

   NO—The system is OK at this time. Ask the customer to demonstrate the problem. ■

6. Check if the navigation system can recognize voice prompts.

   Can the voice prompts be recognized?

   YES—Go to step 7.

   NO—Refer to the navigation system troubleshooting (see page 23-241). ■

7. Pair the customer's phone to a known-good vehicle and try to duplicate the problem.

   Can you duplicate the problem?

   YES—Call the HFL support desk at 888-528-7876, and inquire if there are any known issues for the problem. If there are no known issues, explain to the customer's this is a system characteristic and cannot be improved at this time. ■

   NO—Substitute a known-good HFL-navigation microphone (see page 23-333). If the problem is still present, substitute a known-good HandsFreeLink control unit. If the problem goes away, replace the original HFL-navigation microphone (see page 23-333). ■

The HFL system is locked and the pass code has been lost or forgotten

1. Connect the HDS to the DLC (see page 23-335).
2. Turn the ignition switch to ON (II).
3. From the Body Electrical menu, select HandsFreeLink.
4. Select Miscellaneous Tests, then select Pass code reset.
5. Follow the HDS prompts to reset the pass code.

HFL messages cannot be heard or are weak

1. Turn the ignition switch to ON (II).
2. Check that the audio system is operating normally, and the speaker sound levels from different audio sources (AM/FM, CDs, etc.).

   Does the audio system work normally, and is the audio output from the speaker normal when playing various audio sources?

   YES—Go to step 3.

   NO—Refer to the audio system symptom troubleshooting. ■
3. Check the navigation voice recognition system.

   Does the voice recognition system work properly?

   YES—Go to step 4.

   NO—Refer to the navigation system troubleshooting. ■
4. Check the audio system when HFL messages are played.

   Dose the audio system mute when HFL messages are being played?

   YES—Go to step 5.

   NO—Go to step 10.
5. Turn the ignition switch to LOCK (0).
6. Disconnect navigation unit connector B (24P) and the HandsFreeLink control unit 28P connector.

(cont'd)

Symptom Troubleshooting (cont'd)

7. Check for continuity between body ground and HandsFreeLink control unit 28P connector terminals No. 11 and No. 25 individually.

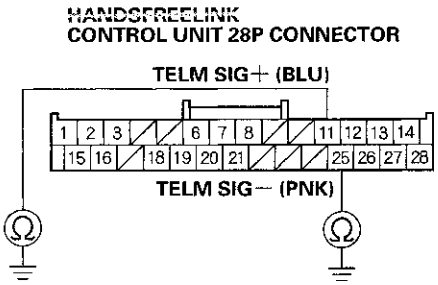

Wire side of female terminals

Is there continuity?

YES—Short to body ground in the wire(s) between the HandsFreeLink control unit and the navigation unit. Replace the affected shielded harness. ■

NO—Go to step 8.

8. Check for continuity between the terminals of the HandsFreeLink control unit 28P connector according to the table.

From terminal	To terminals
11 (BLU)	25 (PNK), 26 (GRY)
25 (PNK)	26 (GRY)

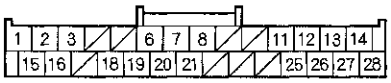

Wire side of female terminals

Is there continuity between any of the terminals?

YES—Short in the wire(s) between the HandsFreeLink control unit and the navigation unit. Replace the affected shielded harness. ■

NO—Go to step 9.

9. Check for continuity between HandsFreeLink control unit 28P connector terminals No. 11 and No. 25 and navigation unit connector B (24P) terminals No. 21 and No. 9.

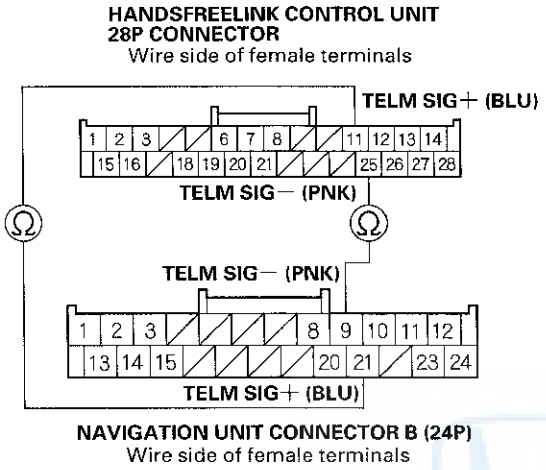

Is there continuity?

YES—Substitute a known-good HandsFreeLink control unit (see page 23-362), and recheck. If the symptom/indication goes away, replace the original HandsFreeLink control unit. If the symptom/indication is still present, replace the navigation unit (see page 23-330). ■

NO—Open in the wire(s) between the HandsFreeLink control unit and the navigation unit. Replace the affected shielded harness. ■

10. Turn the ignition switch to LOCK (0).

11. Disconnect navigation unit connector B (24P) and the HandsFreeLink control unit 28P connector.

12. Check for continuity between body ground and HandsFreeLink control unit 28P connector terminal No. 3.

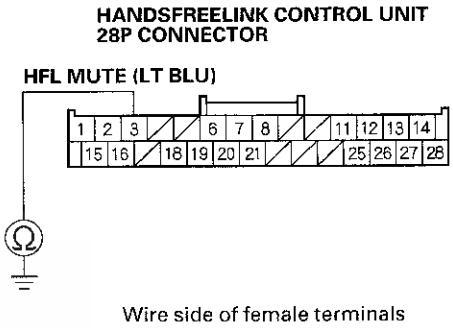

Is there continuity?

YES—Repair short to body ground in the wire between the HandsFreeLink control unit and the navigation unit. ■

NO—Go to step 13.

(cont'd)

Symptom Troubleshooting (cont'd)

13. Check for continuity between HandsFreeLink control unit 28P connector terminal No. 3 and navigation unit connector B (24P) terminal No. 8.

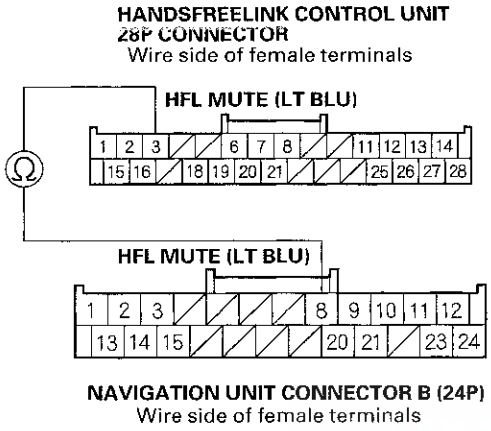

Is there continuity?

YES—Substitute a known-good HandsFreeLink control unit (see page 23-362), and recheck. If the symptom/indication goes away, replace the original HandsFreeLink control unit. If the symptom/indication is still present, replace the navigation unit (see page 23-330). ■

NO—Repair open in the wire between the HandsFreeLink control unit and the navigation unit. ■

The Bluetooth icon in the navigation display is grayed-out

1. Turn the ignition switch to ON (II).
2. Disconnect navigation unit connector B (24P) and the HandsFreeLink control unit 28P connector.
3. Check for continuity between body ground and HandsFreeLink control unit 28P connector terminal No. 19.

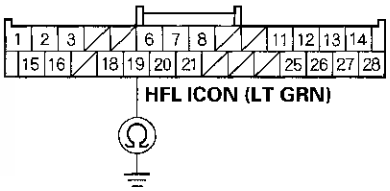

Wire side of female terminals

Is there continuity?

YES—Repair short to body ground in the wire between the HandsFreeLink control unit and the navigation unit. ■

NO—Go to step 4.

4. Check for continuity between HandsFreeLink control unit 28P connector terminal No. 19 and navigation unit connector B (24P) terminal No. 20.

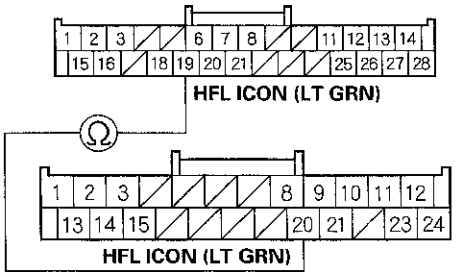

Is there continuity?

YES—Substitute a known-good HandsFreeLink control unit (see page 23-362), and recheck. If the symptom/indication goes away, replace the original HandsFreeLink control unit. If the symptom/indication is still present, replace the navigation unit (see page 23-330). ■

NO—Repair open in the wire between the HandsFreeLink control unit and the navigation unit. ■

HFL Switch Test

1. Remove the HFL-voice control switch (see page 23-332).

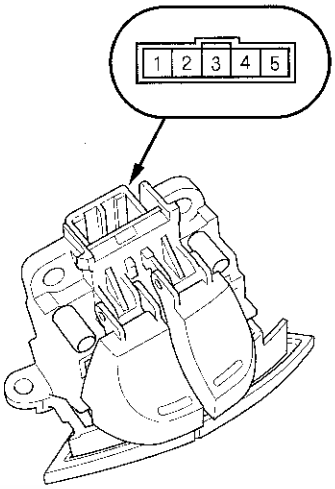

2. Measure resistance between terminals No. 3 and No. 4 in each switch position according to the table.

HFL Switch

Position	Resistance
No button pressed	About 1 kΩ
HFL TALK button pressed	About 185 Ω
HFL BACK button pressed	About 45 Ω

3. If the resistance is not as specified, replace the HFL-voice control switch.

Control Unit Input Test/Replacement

1. Remove the center console (see page 20-79).
2. Remove the console lower box (see page 20-81).
3. Disconnect the 28P connector (A) from the HandsFreeLink control unit (B).

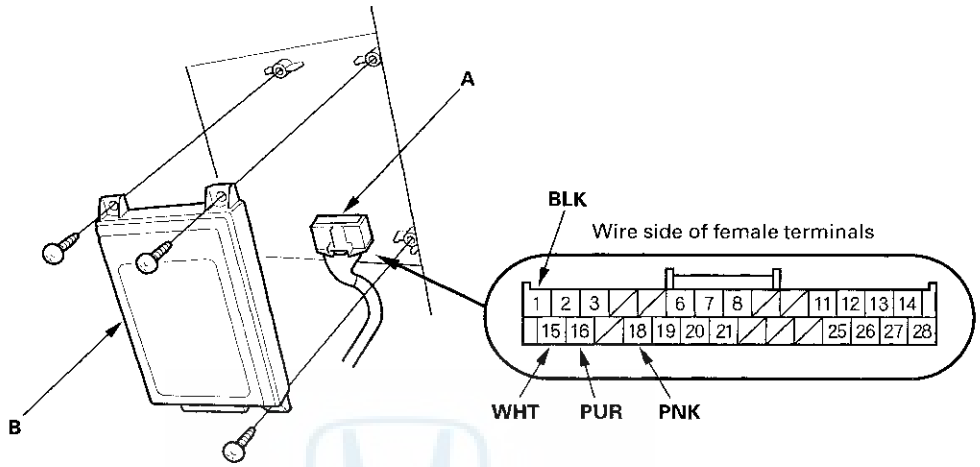

4. Inspect the connector and socket terminals for a good pinfit to be sure they are all making good contact.
   - If the terminals are bent, loose or corroded, repair them as necessary, and recheck the system.
   - If the terminals look OK, go to step 5.
5. Reconnect the connector and make these input tests at the connector.
   - If any test indicates a problem, find and correct the cause, then recheck the system.
   - If all the input tests prove OK, go to step 6.

Cavity	Wire	Test condition	Test: Desired result	Possible cause if result is not obtained
1	BLK	Under all conditions	Measure the voltage to ground: There should be less than 0.5 V.	• Poor ground (G501) • An open in the wire
15	WHT	Under all conditions	Measure the voltage to ground: There should be battery voltage.	• Blown No. 23 (10 A) fuse in the under-hood fuse/relay box • An open in the wire
16	PUR	Ignition switch ON (II)	Measure the voltage to ground: There should be battery voltage.	• Blown No. 35 (7.5 A) fuse in the under-dash fuse/relay box • An open in the wire

6. Disconnect the 28P connector again, and make this input test at the connector.
   - If the test indicates a problem, find and correct the cause, then recheck the system.
   - If the input test proves OK, the HandsFreeLink control unit must be faulty, replace it.

Cavity	Wire	Test condition	Test: Desired result	Possible cause if result is not obtained
18	PNK	Under all conditions	Check for continuity between terminal No. 18 and the under-dash fuse/relay box connector Q (16P) terminal No. 6: There should be continuity.	An open in the wire
		Under-dash fuse/relay box connector Q (16P) disconnected	Check for continuity to ground: There should be no continuity.	Short to ground

Restraints

Restraints

Special Tools 24-2

Seat Belts

Component Location Index 24-3
Front Seat Belt Replacement 24-4
Rear Seat Belt Replacement 24-7
Inspection 24-9

SRS (Supplemental Restraint System)

Component Location Index 24-11
Precautions and Procedures 24-13
General Troubleshooting Information 24-22
ODS Unit Initialization 24-26
ODS Unit Calibration 24-27
ODS Unit Operation Check 24-28
Driver's Seat Position Sensor Operation Check 24-29
DTC Troubleshooting Index 24-30
Symptom Troubleshooting Index 24-34
System Description 24-35
Circuit Diagram 24-40
DTC Troubleshooting 24-52
Symptom Troubleshooting 24-177
Component Replacement/Inspection After Deployment 24-181
Driver's Airbag Replacement 24-184
Front Passenger's Airbag Replacement 24-185
Side Airbag Replacement 24-187
Side Curtain Airbag Replacement 24-188
Airbag and Tensioner Disposal 24-192
Cable Reel Replacement 24-196
SRS Unit Replacement 24-199
Side Impact Sensor (First) Replacement 24-200
Side Impact Sensor (Second) Replacement 24-201
Rear Safing Sensor Replacement 24-202
Front Passenger's Weight Sensor Replacement 24-203
ODS Unit Replacement 24-205
Front Impact Sensor Replacement 24-206
Driver's Seat Position Sensor Replacement 24-207
Passenger's Airbag Cutoff Indicator Illumination Bulb Test/Replacement 24-208

Special Tools

Ref. No.	Tool Number	Description	Qty
①	07HAZ-SG00500	Deployment Tool	1
②	07SAZ-TB4011A	SRS Inflator Simulator	1
③	070AZ-SNAA100	SRS Simulator Lead J	1
④	07TAZ-001020A	Back Probe, 17 mm	2
⑤	070AZ-SNAA200	SRS Simulator Lead K	1
⑥	070AZ-SNAA300	SRS Simulator Lead L	1
⑦	070AZ-SAA0100	SRS Short Canceller	2
⑧	07744-0010300	Pin Driver, 3.5 mm	1
⑨	07PAZ-001010A	SCS Service Connector	1

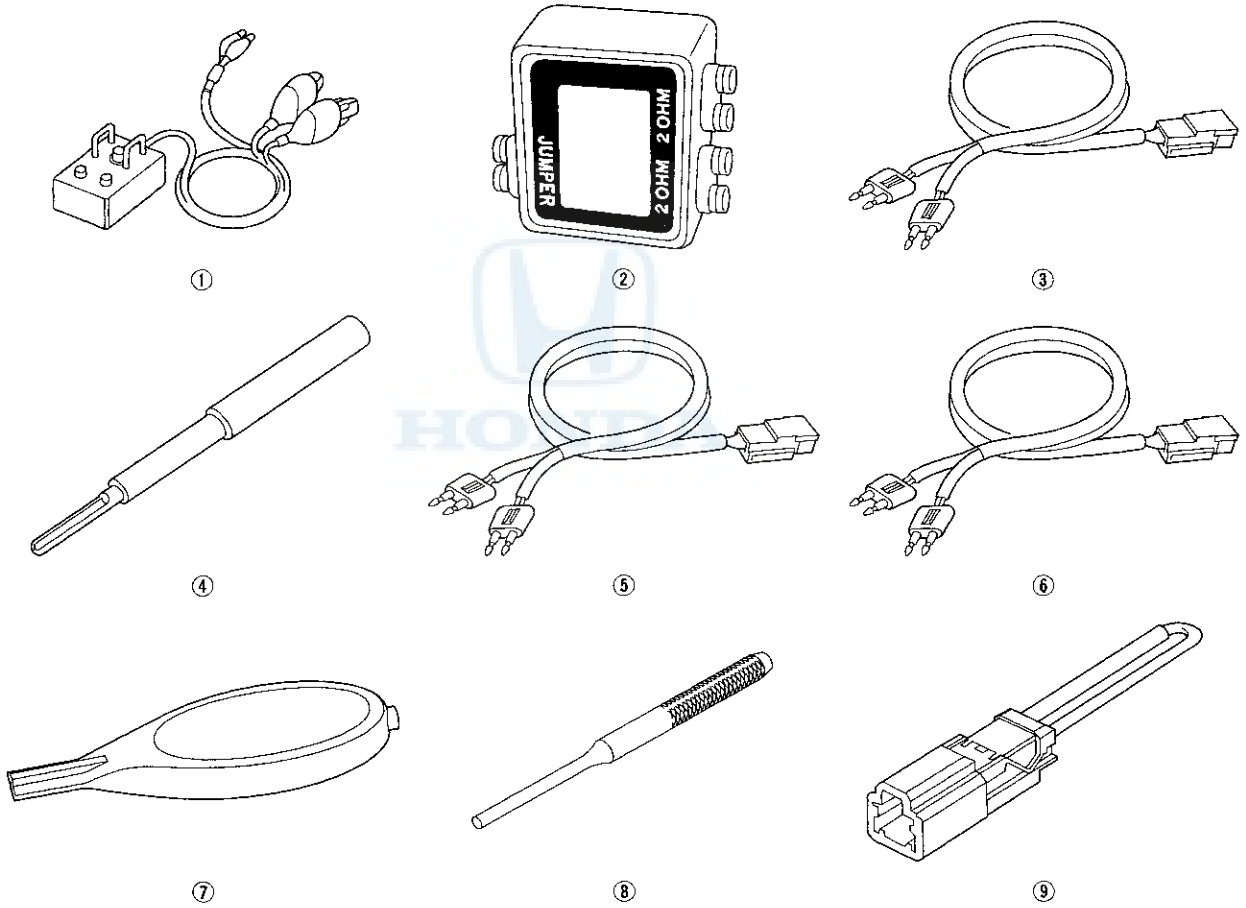

Component Location Index

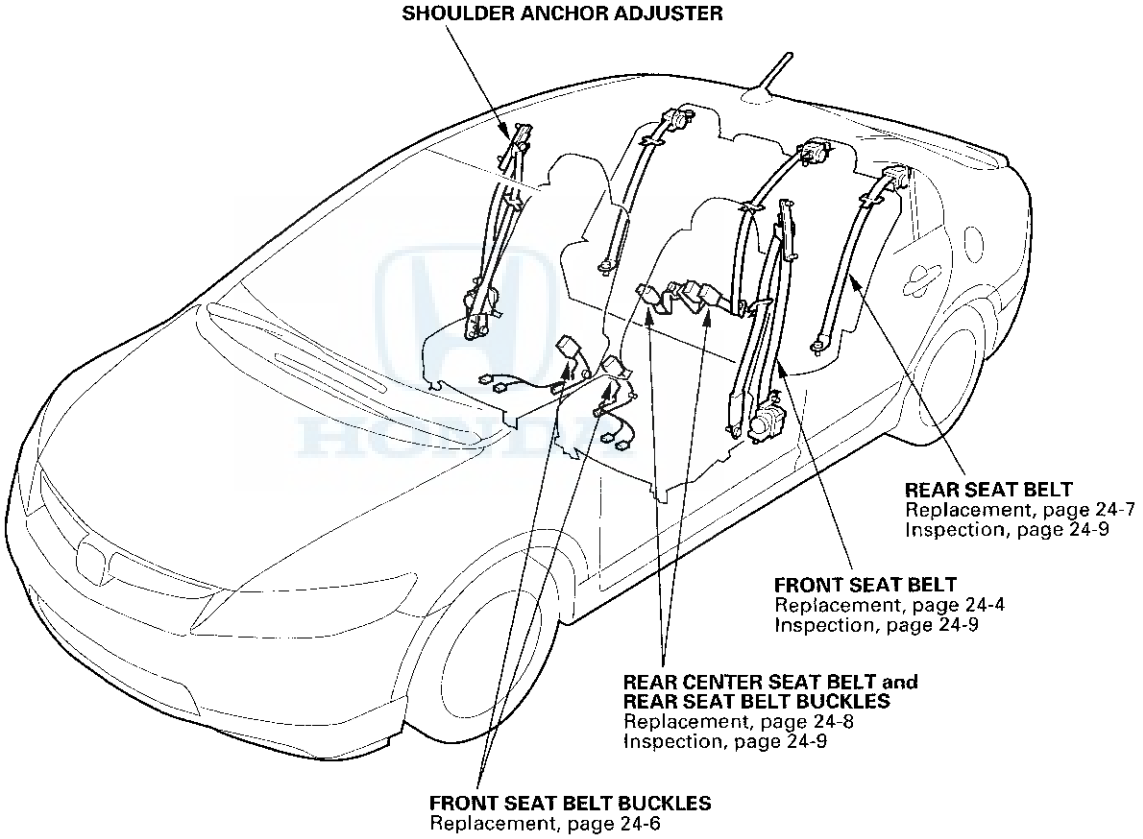

Front Seat Belt Replacement

Front Seat Belt

SRS components are located in this area. Review the SRS component locations (see page 24-11) and the precautions and procedures (see page 24-13) before doing repairs or service.

NOTE:
- Check the front seat belts for damage (see page 24-9), and replace them if necessary.
- If replacing the front seat belt after deployment, refer to Component Replacement/Inspection After Deployment (see page 24-181) for a complete list of other parts that must also be replaced.

1. Do the battery terminal disconnection procedure (see page 22-62), then wait at least 3 minutes before beginning work.

2. Slide the front seat forward fully, and remove the anchor cover (A).

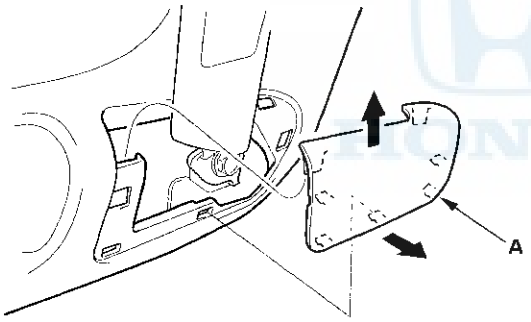

3. Remove the lower anchor bolt (A).

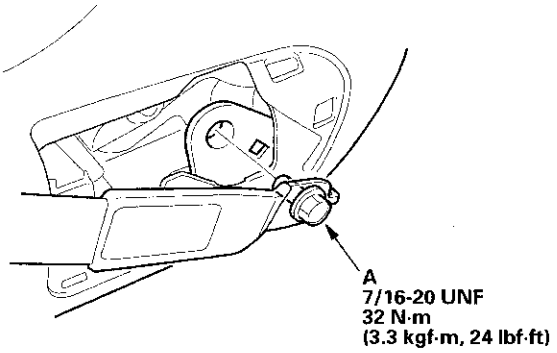

4. Remove the B-pillar lower trim (see page 20-60).

5. Remove the B-pillar upper trim and slider (see page 20-60).

6. Remove the upper anchor bolt (A).

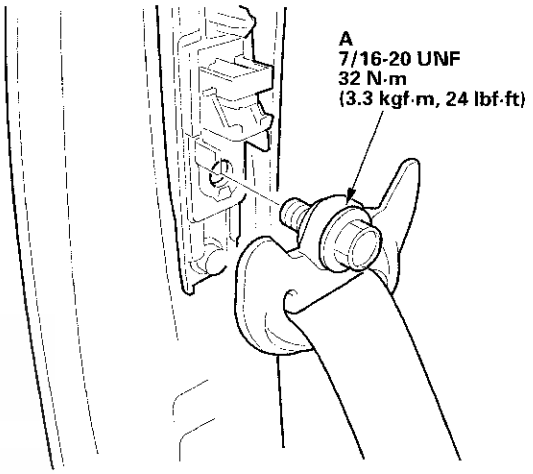

7. Disconnect the seat belt tensioner connector (A). Remove the upper retractor mounting bolt (B) and the lower retractor bolt (C), then remove the front seat belt (D) and retractor (E).

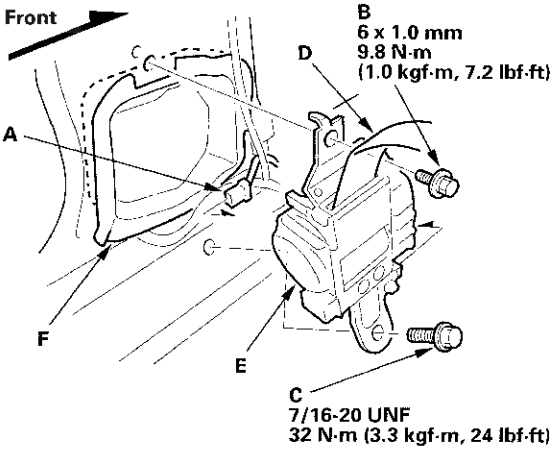

8. If necessary, remove the front seat belt protector (F).

9. Remove the shoulder anchor adjuster (A).

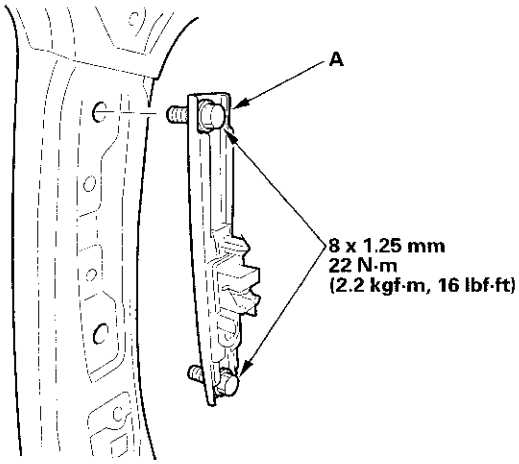

10. Install the seat belt in the reverse order of removal, and note these items:

- Apply medium strength liquid thread lock to the anchor bolts before reinstallation.
- Tighten the bolts by hand first, then tighten to the specified torque.
- Check that the retractor locking mechanism functions as described (see page 24-9).
- Assemble the washer, the collar, and the bushing on the upper anchor bolt as shown.
- If the seat belt tensioner has been deployed, replace the front seat belt protector.
- Before installing the anchor bolts, make sure there are no twists or kinks in the seat belt.
- Make sure the seat belt tensioner is properly plugged in.
- If the IMA battery level gauge (BAT) displays no segments, start the engine, and hold it between 3,500 rpm and 4,000 rpm without load (in Park or Neutral) until the BAT displays at least three segments.
- Do the battery terminal reconnection procedure (see page 22-62).
- Check for any DTCs that may have been set during repairs and clear them.

Upper anchor bolt installation

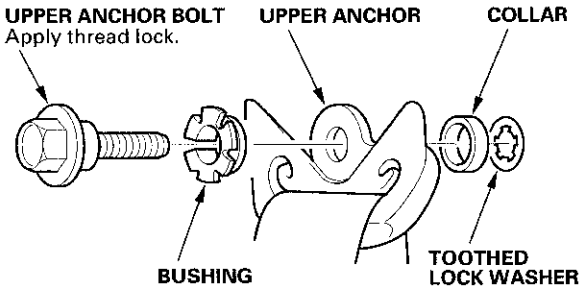

(cont'd)

Front Seat Belt Replacement (cont'd)

Front Seat Belt Buckle

SRS components are located in this area. Review the SRS component locations (see page 24-11) and the precautions and procedures (see page 24-13) before doing repairs or service.

NOTE: If replacing the front seat belt buckle after deployment, refer to Component Replacement/ Inspection After Deployment (see page 24-181) for a complete list of other parts that must also be replaced.

1. Do the battery terminal disconnection procedure (see page 22-62), then wait at least 3 minutes before beginning work.

2. Remove the front seat (see page 20-105).

3. Lift up the front seat, then detach the seat belt switch connecter (A) and seat belt buckle tensioner connector (B), and on the driver's seat, detach the harness clip (C).

Driver's seat

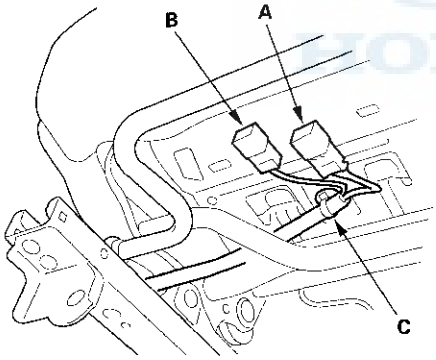

Passenger's seat

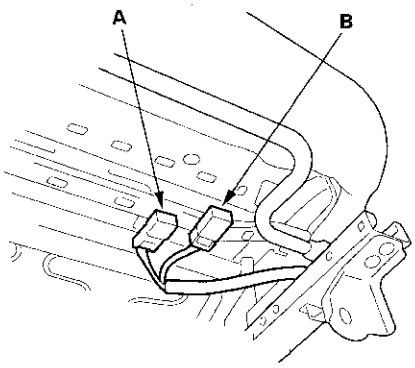

4. Remove the center anchor bolt (A), then remove the seat belt buckle (B) from the elastic band (C).

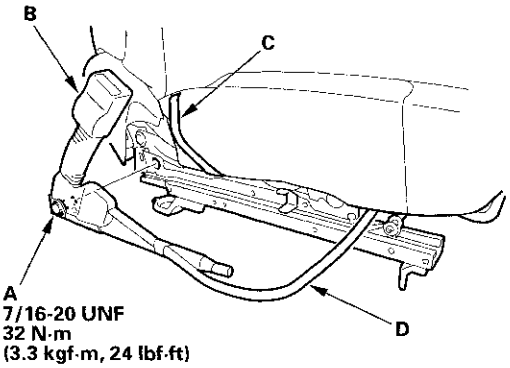

5. Pull the seat belt switch harness (D) out through the space between the seat cushion and the seat track (driver's seat), or through the hole in the seat track (passenger's seat).

6. Install the buckle in the reverse order of removal, and note these items:

   - Assemble the washers on the center anchor bolt as shown.
   - Apply medium strength liquid thread lock to the center anchor bolt before reinstallation.
   - Tighten the bolts by hand first, then tighten to specification with a torque wrench.
   - Make sure the seat belt switch connector and seat belt buckle tensioner connector are plugged in properly.
   - Operate the seat adjustments and make sure the buckle harness does not get pinched.
   - If the IMA battery level gauge (BAT) displays no segments, start the engine, and hold it between 3,500 rpm and 4,000 rpm without load (in Park or Neutral) until the BAT displays at least three segments.
   - Do the battery terminal reconnection procedure (see page 22-62).
   - Check for any DTCs that may have been set during repairs and clear them.

Center anchor bolt installation

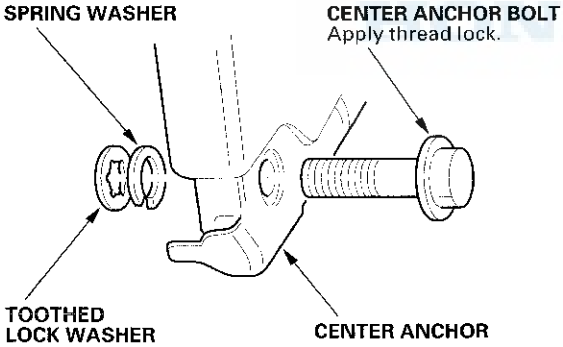

Rear Seat Belt Replacement

NOTE: Check the rear seat belts for damage, and replace them if necessary. Be careful not to damage them during removal and installation.

Rear Seat Belt

1. Remove the rear seat cushion (see page 20-118).

2. Remove the lower anchor bolt (A).

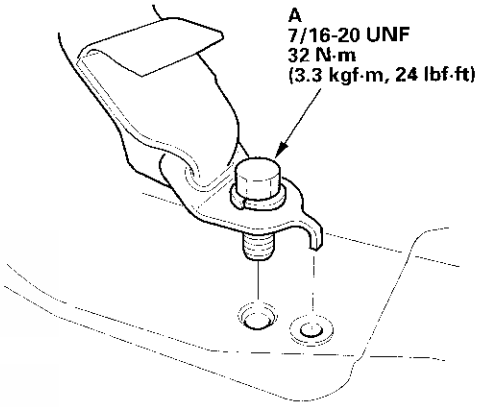

3. Remove these items:

   - C-pillar trim, both sides (see page 20-63)
   - Rear shelf (see page 20-66)

(cont'd)

Rear Seat Belt Replacement (cont'd)

4. Remove the retractor bolt (A), then remove the rear seat belt (B) and retractor (C).

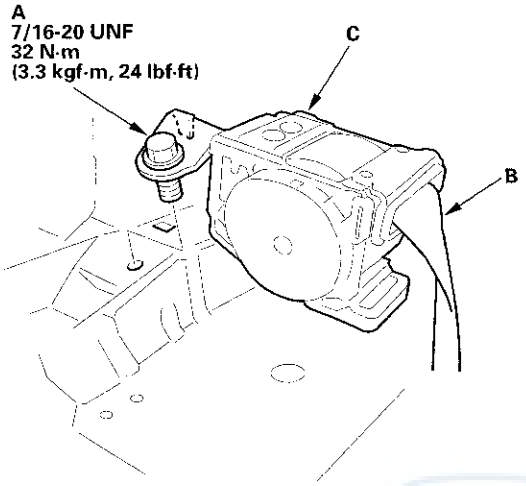

5. Install the rear seat belt and retractor in the reverse order of removal, and note these items:

   - Apply medium strength liquid thread lock to the anchor bolts before reinstallation.
   - Check that the retractor locking mechanism functions as described (see page 24-9).
   - Before installing the anchor bolt, make sure there are no twists or kinks in the rear seat belt.

Center Seat Belt and Seat Belt Buckles

1. Remove the rear seat cushion (see page 20-118).

2. Remove the center anchor bolts (A), then remove the right seat belt buckle (B), the center seat belt buckle (C), and left seat belt buckle (D).

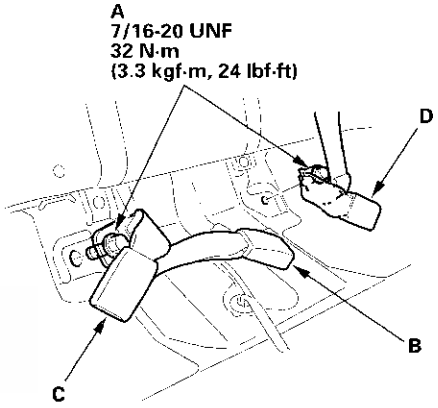

3. Remove these items:

   - C-pillar trim (see page 20-63)
   - Rear shelf (see page 20-66)

4. Remove the retractor mounting ET screw (A) and the retractor bolt (B), then remove the rear seat belt (C) and the retractor (D).

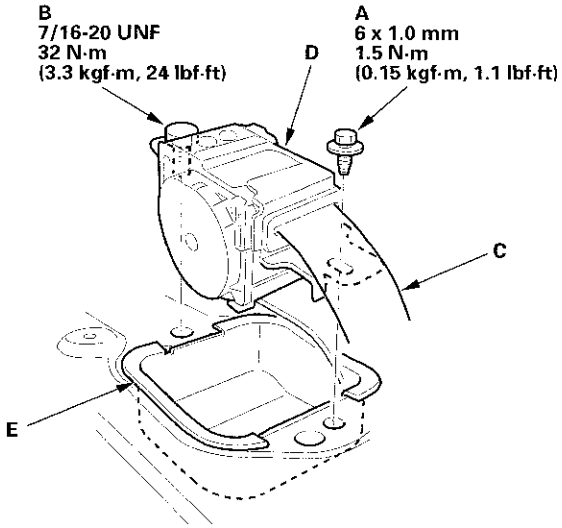

5. Remove the rear center seat belt protector (E).

6. Install the seat belt and buckles in the reverse order of removal, and note these items:

   - Apply medium strength liquid thread lock to the center anchor bolts before reinstallation.
   - Tighten the bolts by hand first, then tighten to the specified torque.
   - Check that the retractor locking mechanism functions as described (see page 24-9).
   - Assemble the washers on the center anchor bolt as shown.
   - Before installing the center anchor bolt, make sure there are no twists or kinks in the center belt.
   - Make sure the rear center emergency locking retractor (ELR) is pointing straight forward.

Center anchor bolt installation

'06 model

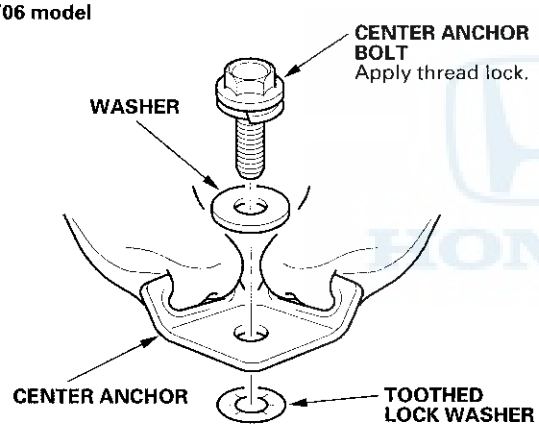

'07-09 models

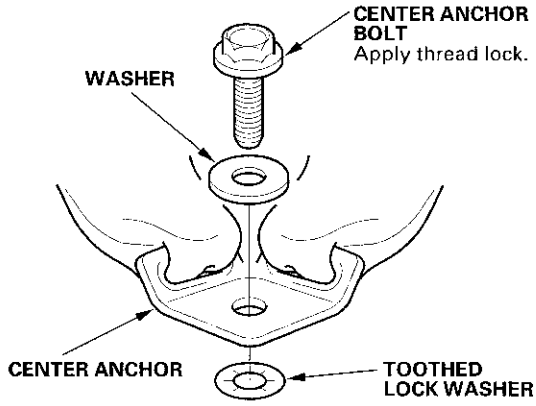

Inspection

Out of Vehicle

For a front seat belt retractor with seat belt tensioner, review the SRS component locations (see page 24-11) and the precautions and procedures (see page 24-13) before doing repairs or service.

Retractor

1. Before installing the retractor, check that the seat belt can be pulled out freely.

2. Make sure that the seat belt does not lock when the retractor (A) is leaned slowly up to 15 ° from the mounted position. The seat belt should lock when the retractor is leaned over 40 °. Do not attempt to disassemble the retractor.

Front

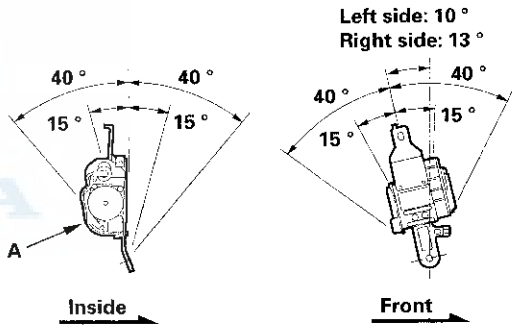

Rear

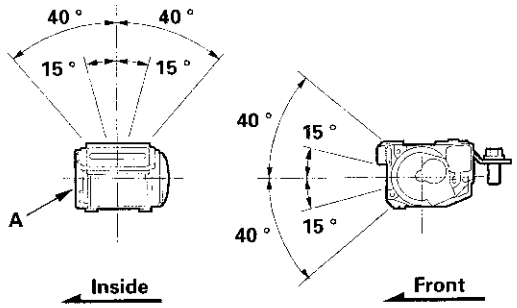

(cont'd)

Inspection (cont'd)

Rear center

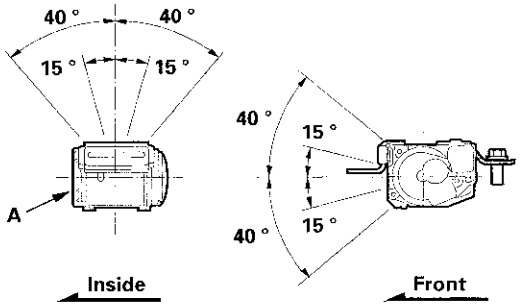

3. Replace the seat belt with a new assembly if there is any abnormality. Do not disassemble any part of the seat belt for any reason.

In-vehicle

1. Check that the seat belt is not twisted or caught on anything.

2. After installing the anchors, check for free movement on the anchor bolts. If necessary, remove the anchor bolts, and check that the washers and other parts are not damaged or improperly installed.

3. Check the seat belts for damage or discoloration. Clean with a shop towel if necessary. Use only soap and water to clean the seat belts.

   NOTE: Dirt build-up in the loops of the upper anchors can cause the seat belts to retract slowly. Wipe the inside of the loops with a clean cloth dampened in isopropyl alcohol.

4. Check that the seat belt does not lock when pulled out slowly. The seat belt is designed to lock only during a sudden stop or impact.

5. Make sure that the seat belt will retract automatically when released.

6. For front passenger's seat belt and all rear seat belts, check the seat belt retractor locking mechanism automatic locking retractor (ALR). This function is for securing child seats.

   -1 Pull the seat belt all the way out to engage the ALR. The seat belt should retract with a ratcheting sound, but not extend. This is normal.
   -2 To disengage the ALR, release the seat belt and allow it to fully retract, then pull the seat belt out part-way. The seat belt should retract and extend normally.

7. Replace the seat belt with a new assembly if there is any abnormality. Do not disassemble any part of the seat belt for any reason.

Component Location Index

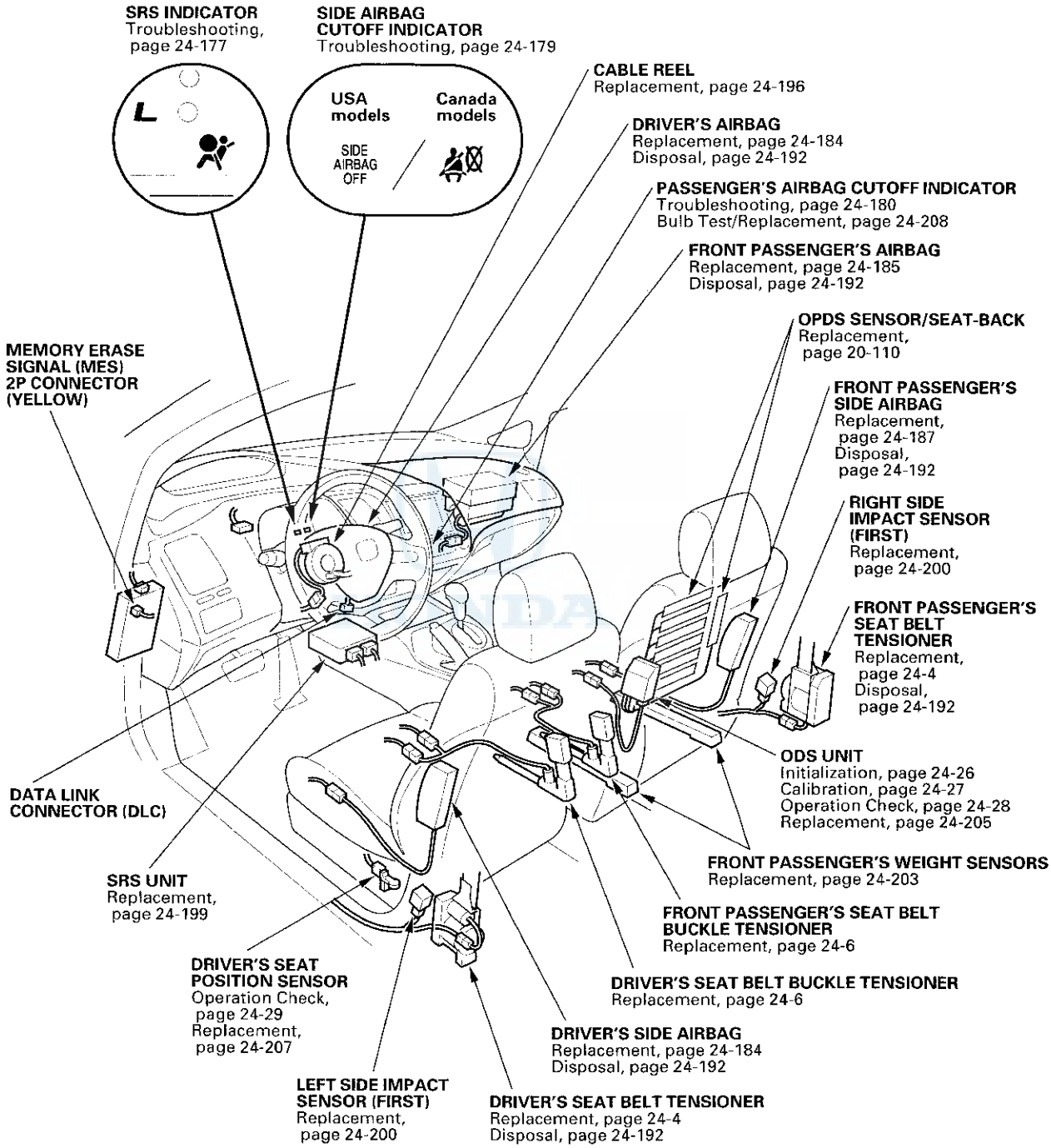

(cont'd)

Component Location Index (cont'd)

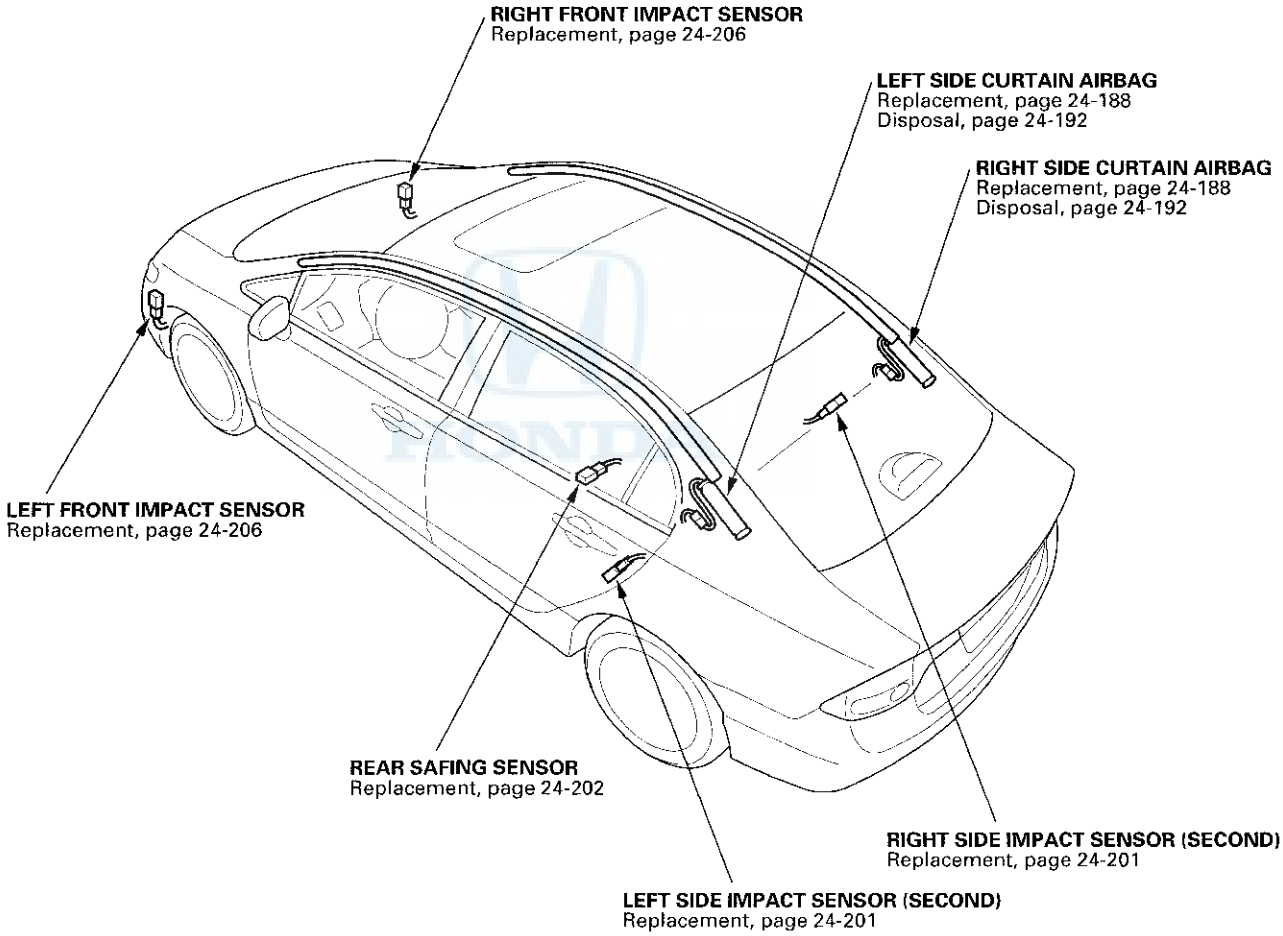

Precautions and Procedures

General Precautions

NOTE: Some systems store data in memory that is lost when the battery is disconnected. Before disconnecting the battery, refer to Battery Terminal Disconnection and Reconnection (see page 22-62).

Please read the following precautions carefully before servicing the airbag system service. If the instructions described in this manual are not properly followed the airbags could accidentally deploy and cause damage or injuries.

- Except when doing electrical inspections, always turn the ignition switch to LOCK (0), disconnect the negative cable from the battery, then wait at least 3 minutes before starting work.

  NOTE: The SRS memory is not cleared even if the ignition switch is turned to LOCK (0) or the battery cables are disconnected from the battery.

- Use replacement parts which are manufactured to the same standards and quality as the original parts. Do not install used SRS parts. Use only new parts when making SRS repairs.

- Carefully inspect any SRS part before you install it. Do not install any part that shows signs of being dropped or improperly handled, such as dents, cracks or deformation.

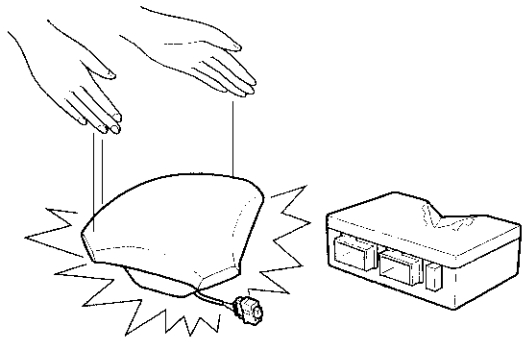

- Before disconnecting the SRS unit connectors, always disconnect the appropriate SRS parts connectors.

- Use only a digital multimeter to check the system. If it is not a Honda multimeter, make sure its output is 10 mA (0.01 A) or less when switched to the lowest value in the ohmmeter range. A tester with a higher output could cause accidental deployment and possible injury.

- Do not put objects on the front passenger's airbag.

- The original audio and navigation system have a coded theft protection circuit. Make sure you have the anti-theft codes for the audio system or the navigation system (if equipped), then write down the audio presets before disconnecting the negative cable from the battery.

- Before returning the vehicle to the customer, enter the anti-theft codes for the audio system or the navigation system (if equipped), then enter the audio presets; set the clock (without navigation).

Steering-related Precautions

Cable Reel Alignment

- Misalignment of the cable reel could cause an open in the wiring, making the SRS system, remote steering wheel controls, or the horn inoperative. Center the cable reel whenever you do the following (see step 6 on page 24-198).
  - Installation of the steering wheel
  - Installation of the cable reel
  - Installation of the steering column
  - Other steering-related adjustment or installation

- Do not disassemble the cable reel.

- Do not apply grease to the cable reel.

- If the cable reel shows any signs of damage, replace it with a new one. For example, if the cable reel does not rotate smoothly, replace it.

(cont'd)

Precautions and Procedures (cont'd)

Airbag Handling and Storage

Do not disassemble an airbag. It has no serviceable parts. Once an airbag has been deployed, it cannot be repaired or reused.

For temporary storage of an airbag during service, observe the following precautions.

- Store the removed airbag with the pad surface up. Never put anything on the airbag.

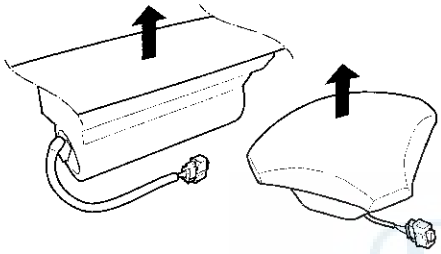

- To prevent damage to the airbag, keep it away from any oil, grease, detergent, or water.

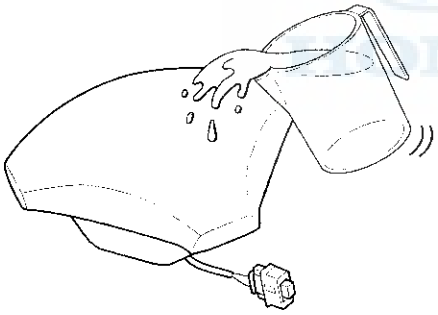

- Store the removed airbag on a secure, flat surface away from any high heat source (exceeding 200 °F/ 93 °C).

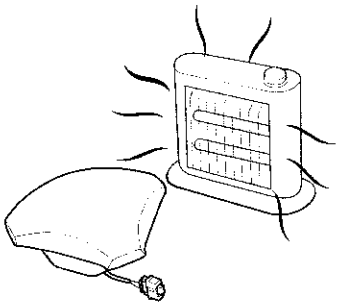

- Never perform electrical inspections to the airbags, such as measuring resistance.
- Do not position yourself in front of the airbag during removal, inspection, or replacement.

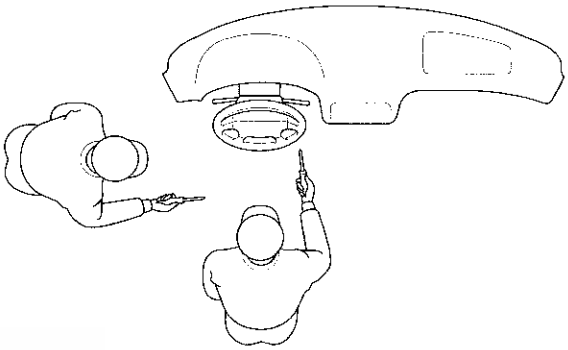

- For proper disposal of a damaged airbag, refer to airbag disposal (see page 24-192).
- The side curtain airbag module assembly is a long, jointed part containing an inflator (A), a flexible bag (B), and brackets (C). When removing or installing the side curtain airbag assembly, never:
  - Handle the flexible bag.
  - Drop airbag assembly.
  - Cut, tear, or unwrap the tape strips.

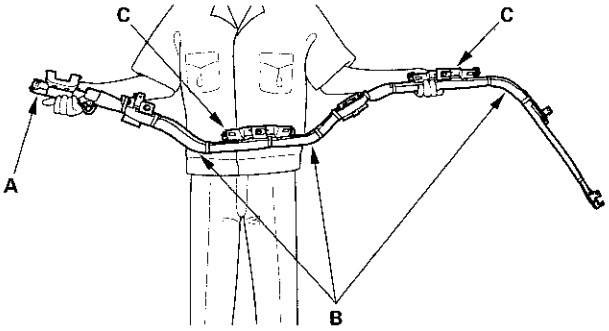

SRS Unit, Front and Side Impact Sensors, Driver's Seat Position Sensor, Front Passenger's Weight Sensors, and Rear Safing Sensor

NOTE: Some systems store data in memory that is lost when the battery is disconnected. Before disconnecting the battery, refer to Battery Terminal Disconnection and Reconnection (see page 22-62).

- Turn the ignition switch to LOCK (0), disconnect the negative cable from the battery, then wait at least 3 minutes before starting installation or replacement of the SRS unit, or disconnecting the connectors from the SRS unit.

- Be careful not to the bump or impact the SRS unit, the front impact sensors, the side impact sensors, or the rear safing sensor whenever the ignition switch is in ON (II), or for at least 3 minutes after the ignition switch is turned to LOCK (0).

- During installation or replacement, be careful not to bump (by impact wrench, hammer, etc.) the area around the SRS unit, front impact sensors, the side impact sensors, or rear safing sensor. The airbags could accidentally deploy and cause damage or injury.

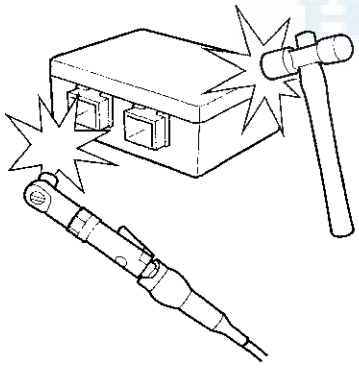

- After a collision where a front airbag, the side airbags or the seat belt tensioners, the seat belt buckle tensioners deployed, go to Component Replacement/ Inspection after Deployment (see page 24-181). After a collision where an airbags did not deploy, inspect for any damage or any deformation on the SRS unit, the front impact sensors, the side impact sensors, or the rear safing sensor. If there is any damage, replace the SRS unit and/or the sensors.

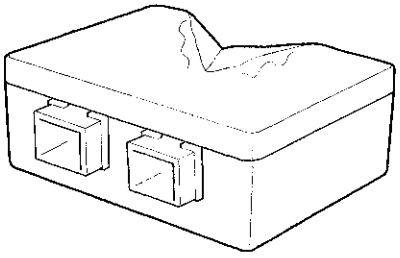

- Do not disassemble the SRS unit, front impact sensors, side impact sensors, driver's seat position sensor, front passenger's weight sensors, or rear safing sensor.

- Always install the SRS unit, driver's seat position sensor, all impact sensors and the rear safing sensor securely with new TORX bolts torqued to 9.8 N·m (1.0 kgf·m, 7.2 lbf·ft).

- Do not spill water or oil on the SRS unit or the any of the sensors.

(cont'd)

Precautions and Procedures (cont'd)

Wiring Precautions

Some of the SRS wiring can be identified by a special yellow outer covering and the SRS connectors can be identified by their yellow color. Observe the following instructions:

- Never attempt to modify, splice, or repair SRS wiring. If there is an open or damage to the SRS wiring, replace the harness.

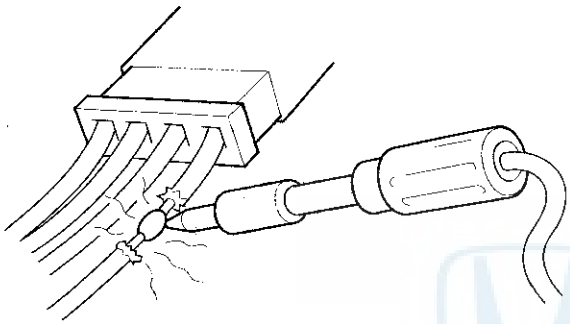

- Be sure to install the harness wires so they do not get pinched or interfere with other parts.

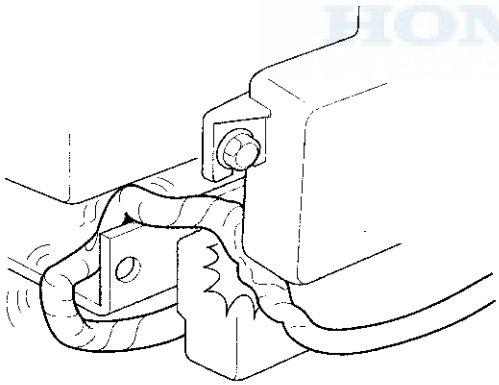

- Make sure all SRS ground locations are clean, and grounds are securely fastened for optimum metal-to-metal contact. Poor grounds can cause intermittent problems that are difficult to diagnose.

- Do not use any silicone based cleaners or lubricants on any SRS connectors or terminals.

Precautions for Electrical Inspections

- When using electrical test equipment, insert the probe of the tester into the wire side of the connector. Do not insert the probe of the tester into the terminal side of the connector, and do not tamper with the connector.

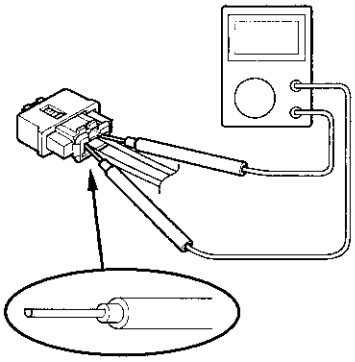

- Use back probe adapter 07TAZ-001020A. Do not insert the probe forcibly.

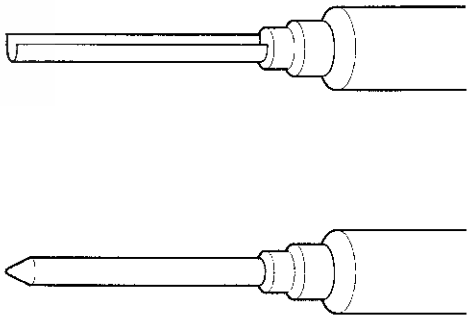

- Use specified service connectors in troubleshooting. Using improper tools could cause a diagnostic error due to poor metal-to-metal contact.

Spring-loaded Lock Connector

Some SRS system connectors have a spring-loaded lock.

Front Airbag Connectors

Disconnecting
To release the lock, pull the spring-loaded sleeve (A) toward the stop (B) while holding the opposite half of the connector. Then pull the connector halves apart. Be sure to pull on the sleeve and not on the connector.

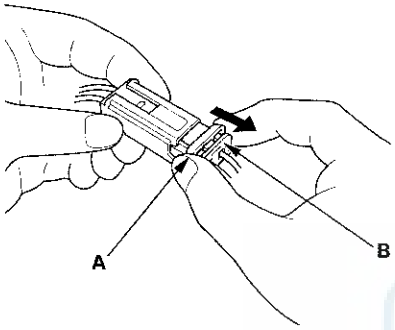

Connecting
To reconnect, hold the pawl-side connector, and press on the back of the sleeve-side connector in the direction shown. As the two connector halves are pressed together, the sleeve (A) is pushed back by the pawl (B). Do not touch the sleeve.

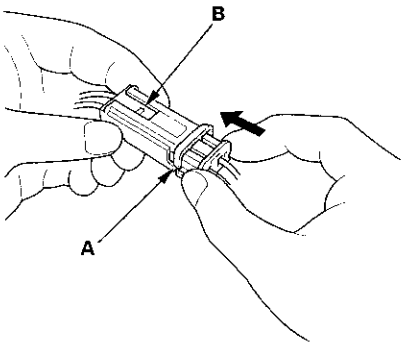

Side Airbag Connector

Disconnecting
To release the lock, pull the spring-loaded sleeve (A) toward the stop (B) while holding the opposite half of the connector. Then pull the connector halves apart. Be sure to pull on the sleeve and not on the connector half.

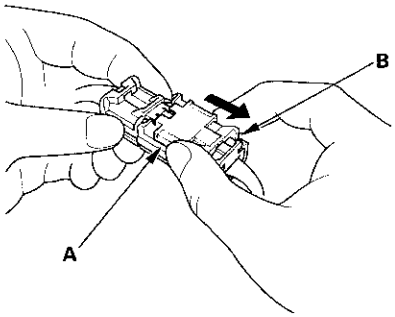

Connecting
Hold both connector halves, and press them firmly together until the projection (A) of the sleeve-side connector clicks.

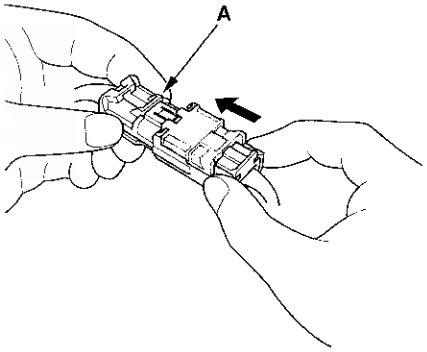

(cont'd)

Precautions and Procedures (cont'd)

Opening the SRS Unit Shorting Connectors for Diagnosis

Special Tools Required
SRS short canceller 070AZ-SAA0100

NOTE:
- To prevent damage to the connector cavity, insert the short canceller straight into the cavity from the terminal side.
- Before installing a short canceller, wash it with electrical contact cleaner, then dry it with compressed air.
- Do not use a short canceller if it is damaged.
- Make sure to remove the short canceller before reconnection.

NOTE: Some systems store data in memory that is lost when the battery is disconnected. Before disconnecting the battery, refer to Battery Terminal Disconnection and Reconnection (see page 22-62).

When SRS unit connectors A (28P) and B (28P) are disconnected, a short circuit is automatically created in the connector by its own function to prevent an airbag deployment. The circuit may need to be open sometimes when testing the system. Insert the short canceller (070AZ-SAA0100) in the specified cavities when it is necessary to keep the circuit open for testing.

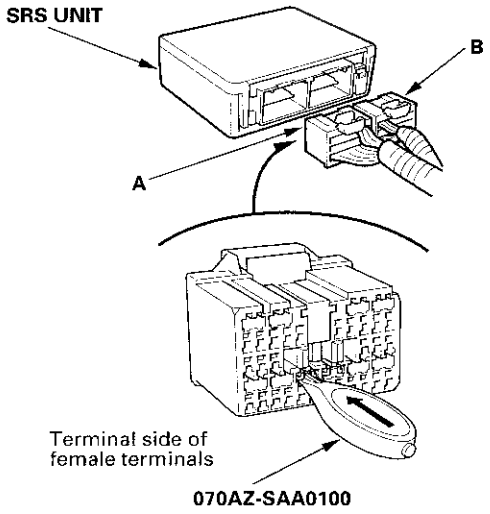

Terminal numbers are shown from the wire side of the female terminals. Insert the short canceller(s) into the cavities on the terminal side of the connector.

SRS UNIT CONNECTOR A (28P)

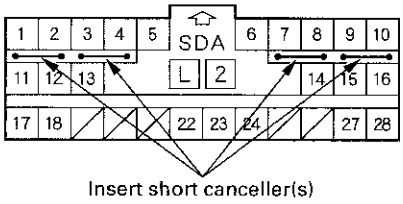

Wire side of female terminals

SRS UNIT CONNECTOR B (28P)

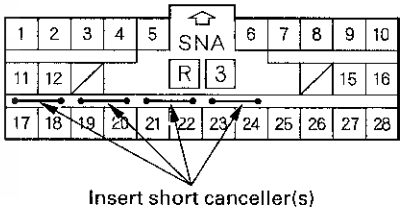

Wire side of female terminals

Seats with Side Airbags

Seats with side airbags have a "SIDE AIRBAG" label on the seat-back.

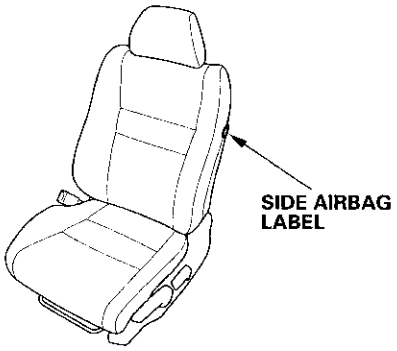

- When cleaning, use a damp cloth to clean the seat. Do not soak the seats with liquid. Do not spray steam on the seats.
- Do not repair a torn or frayed seat-back cover. Replace the seat-back cover if it is damaged.
- After a collision where the side airbag was deployed, replace the side airbag and seat frame with new parts. If the seat-back cushion is split, it must be replaced.
- Never put aftermarket accessories on the seats (covers, pads, seat heaters, lights, etc.).

1. Turn the ignition switch to LOCK (0). Disconnect the negative cable from the battery, then wait at least 3 minutes.

Driver's Airbag

2. Remove the access panel (A) from the steering wheel, then disconnect the driver's airbag 4P connector (B) from the cable reel.

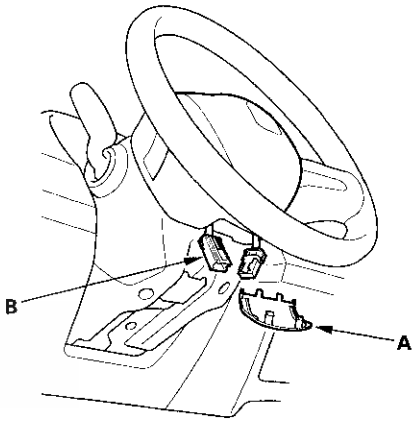

(cont'd)

Precautions and Procedures (cont'd)

Front Passenger's Airbag

3. Remove the glove box (see page 20-91), then disconnect the front passenger's airbag 4P connector (A) from the dashboard wire harness.

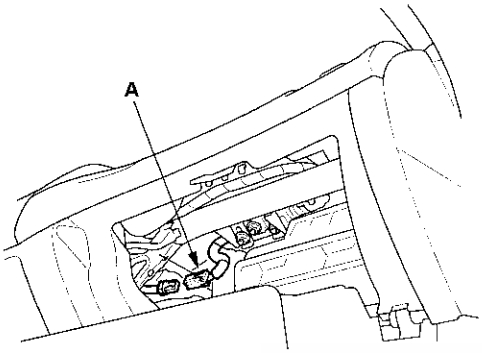

Side Airbag

4. Disconnect the driver's and passenger's side airbag 2P connectors (A) from the floor wire harness.

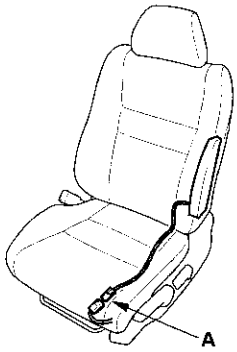

Side Curtain Airbag

5. Remove the headliner (see page 20-71).

6. Disconnect both floor wire harness 2P connectors (A) from the side curtain airbags.

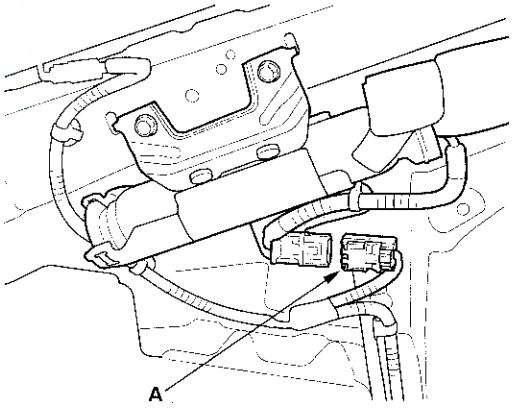

Seat Belt Tensioner

7. Remove the B-pillar lower trim (see page 20-60). Disconnect both floor wire harness 4P connectors (A) from the seat belt tensioners.

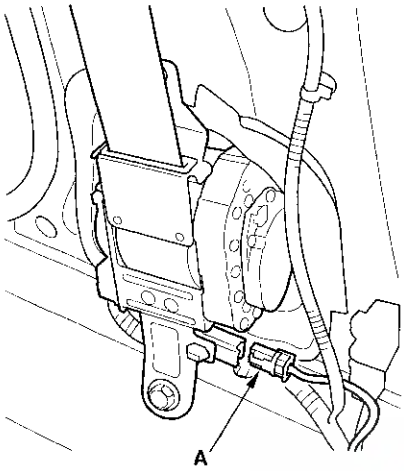

Seat Belt Buckle Tensioner

8. Disconnect both floor wire harness 4P connectors (A) from the seat belt buckle tensioner.

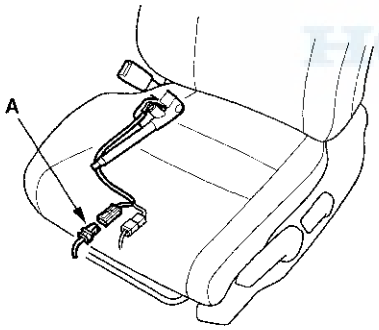

SRS Unit

9. Remove the center console (see page 20-79). Disconnect SRS unit connector A (28P) and B (28P) from the SRS unit.

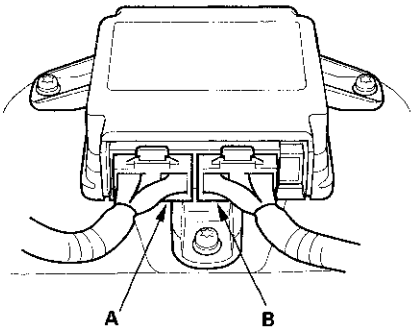

General Troubleshooting Information

DTC (Diagnostic Trouble Codes)

The self-diagnostic function of the SRS system allows it to locate the causes of system problems and then store this information in memory. For easier troubleshooting, this data can be retrieved via a data link circuit.

- When you turn the ignition switch to ON (II), the SRS indicator should come on. If it goes off after 6 seconds, the system is normal, and is not currently detecting any abnormality.
- If there is an abnormality, the system locates and defines the problem, stores this information in memory, and turns on the SRS indicator. The data remains in memory even if the ignition switch is turned to LOCK (0) or the battery is disconnected.
- The data is stored in memory as a diagnostic trouble code (DTC).
- The "x" at the end of each DTC denotes a numeric character (0 thru 9) or an alpha character (A thru F) that is displayed on the HDS.
- DTCs are either latching or resetting depending on the malfunction. With resetting DTCs, the SRS indicator goes off the next time the ignition switch is turned to ON (II) and the system is normal, but the DTC is still stored. With latching DTCs, the SRS indicator does not turn to LOCK (0) until the malfunction is repaired and the DTC is cleared.
- When you connect the HDS to the data link connector (DLC), you can retrieve a more detailed DTC in the HDS "SRS" menu.

  NOTE: Only read DTCs from the SRS menu, not from the SWS menus unless instructed to check SWS DTCs. SWS (ODS unit) DTCs are subcodes of SRS unit DTCs. Only troubleshoot the corresponding SRS DTCs.
- After reading and recording the DTC, proceed with the troubleshooting procedure for that code.

Precautions

- Use only a digital multimeter to check the system. Make sure its output is 10 mA (0.01 A) or less when switched to the smallest value in the ohmmeter range. A tester with a higher output could damage the airbag circuit or cause accidental airbag deployment and possible injury.
- Whenever the ignition switch is in ON (II), or has been turned to LOCK (0) for less than 3 minutes, be careful not to bump the SRS unit; the airbags could accidentally deploy and cause damage or injuries.
- Before you removing the dashboard wire harness, floor wire harness, disconnect the driver's airbag connector, the front passenger's airbag connector, both side airbag connectors, both side curtain airbag connectors, both seat belt tensioner connectors and both seat belt buckle tensioner connectors.
- Make sure the battery is fully charged. If the battery is dead or low, electrical measurement may not be correct.
- Do not touch a tester probe to the terminals in the SRS unit or harness connectors, and do not connect the SRS unit terminals or the sensor terminals with a jumper wire. Use only the backprobe set and the multimeter. Backprobe spring-loaded lock type connectors correctly.

Reading the DTC

1. Make sure the ignition switch is in LOCK (0).
2. Connect the HDS to the data link connector (DLC) (A).

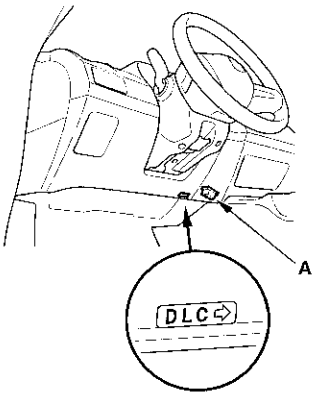

3. Turn the ignition switch to ON (II).

4. Make sure the HDS communicates with the vehicle and the SRS unit. If it does not communicate, troubleshoot the DLC circuit (see page 11-213).

5. Use the HDS to check for DTCs.

   NOTE: Only read DTCs from the SRS menu, not from the SWS menus unless instructed to check SWS DTCs. SWS (ODS unit) DTCs are subcodes of SRS unit DTCs. Only troubleshoot the corresponding SRS DTCs.

6. Read and record the DTC.

7. Turn the ignition switch to LOCK (0), and wait for 10 seconds.

8. Disconnect the HDS from the DLC.

9. Do the troubleshooting procedure for the DTC.

Clear the DTC Memory With the HDS

NOTE: Make sure the battery is fully charged before you begin.

1. Make sure the ignition switch is in LOCK (0).

2. Connect the HDS to the data link connector (DLC) (A).

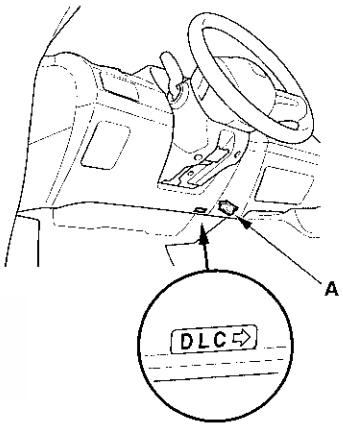

3. Turn the ignition switch to ON (II).

4. Make sure the HDS communicates with the vehicle and the SRS unit. If it does not communicate, troubleshoot the DLC circuit (see page 11-213).

5. In the SRS MENU of the HDS, select SRS, then DTC to clear DTCs.

6. Turn the ignition switch to LOCK (0), and wait for 10 seconds.

7. Disconnect the HDS from the DLC.

(cont'd)

General Troubleshooting Information (cont'd)

Clear the DTC Memory Using MES Connector Without the HDS

Special Tools Required
SCS service connector 07PAZ-001010A

NOTE: Make sure the battery is fully charged before you begin.

To clear the DTCs from the SRS unit, use the HDS or the following procedure.

1. Make sure the ignition switch is in LOCK (0).
2. Connect the SCS service connector (A) to the yellow MES 2P connector (B). Do not use a jumper wire.

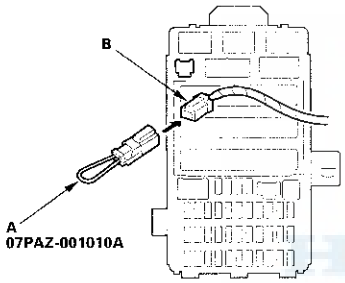

3. Turn the ignition switch to ON (II).
4. The SRS indicator will come on for about 6 seconds, and then go off. Remove the SCS service connector from the MES connector (2P) within 4 seconds after the indicator goes off.
5. The SRS indicator will come on again. Reconnect the SCS service connector to the MES connector (2P) within 4 seconds after the indicator comes on.
6. When the SRS indicator goes off, remove the SCS service connector from the MES connector (2P) within 4 seconds.
7. The SRS indicator blinks two times, indicating that the memory has been cleared.
8. Turn the ignition switch to LOCK (0), and wait for 10 seconds.
9. Turn the ignition switch to ON (II) again. If the SRS indicator comes on for 6 seconds, and then goes off, the system is OK. If the indicator stays on, troubleshoot the DTC. If there in no DTC, refer to symptom troubleshooting.

Troubleshooting Intermittent Failures

If there was a malfunction, but it does not recur, it will be stored in the memory as an intermittent failure, and the SRS indicator may come on depending on this malfunction detected.

NOTE:
- Check the condition of the battery (see page 22-61) and the IMA system (see page 12-5). Low battery voltage may cause some intermittent failures.
- A faulty or damaged cable reel can cause intermittent problems related to the driver's airbag inflator DTCs.

After checking the DTC, troubleshoot as follows:

1. Make sure the ignition switch is in LOCK (0).
2. Connect the HDS to the data link connector (DLC).
3. Turn the ignition switch to ON (II).
4. Make sure the HDS communicates with the vehicle and the SRS unit. If it does not communicate, troubleshoot the DLC circuit (see page 11-213).
5. In the SRS MENU on the HDS, select SRS, then DTC to clear DTS(s).
6. Read the DTC (see Reading the DTC).
7. Clear the DTC memory (see Clear the DTC).
8. Set the parking brake, then start the engine, and let it idle.
9. The SRS indicator comes on for about 6 seconds and then goes off.

10. Shake the related wire harnesses and the connectors, and look for loose connections, poor pinfits, and poor grounds.

11. Take a test-drive (quick acceleration, quick braking, and cornering), turn the steering wheel fully left and right, and hold it there for 5 to 10 seconds. If the problem recurs, the SRS indicator will come on.

12. If you cannot duplicate the concern, ask the customer about the conditions when it occurred, or ask the customer to demonstrate the concern.

13. If you cannot duplicate the intermittent failure, the system is OK at this time.

Checking Front Passenger's Weight Sensors After a Vehicle Collision

1. Position the front passenger's seat to the rearmost position, adjust the seat-back to the forwardmost position. Do not move it from this position.

2. Drive the vehicle, accelerate to 20 mph (36 km/h), then stop on level ground.

3. Make sure the ignition switch is in LOCK (0).

4. Connect the HDS to the data link connector (DLC) (A).

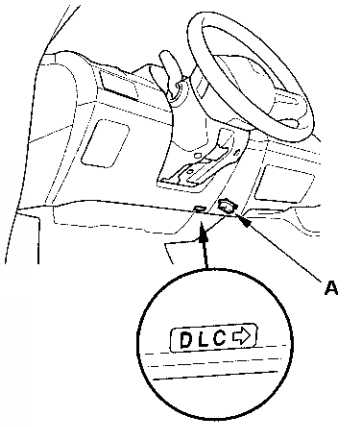

5. Turn the ignition switch to ON (II).

6. Make sure the HDS communicates with the vehicle and the SRS unit. If it does not communicate, troubleshoot the DLC circuit (see page 11-213).

7. From the SRS inspection menu, select Seat Weight Sensor, then Misc test, then SEAT OUTPUT CHK and follow the prompts until the front passenger's weight sensor operation check is complete.

ODS Unit Initialization

When a seat-back cover, seat-back cushion, and/or ODS unit is replaced, initialize the ODS by following the procedure.

NOTE: A new (uninitialized) ODS unit installed with a faulty OPDS sensor can cause DTC 85-71.

1. Clear the DTC memory (see page 24-23).
2. Make sure the front passenger's seat is dry. Set the seat-back in a normal position, and make sure there is nothing on the seat.
3. Make sure the ignition switch is in LOCK (0) and the MES connector is not shorted.
4. Connect the HDS to the data link connector (DLC) (A).

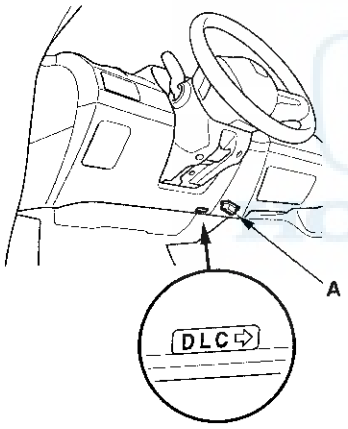

5. Turn the ignition switch to ON (II).
6. Make sure the HDS communicates with the vehicle and the SRS unit. If it does not communicate, troubleshoot the DLC circuit (see page 11-213).
7. From the HDS Main Menu, select SRS, then SRS, then Calibration. In the Calibration Menu, select ODS INITIALIZATION. Follow the screen prompts to initialize the ODS unit.
8. Turn the ignition switch to LOCK (0).
9. Disconnect the HDS from the DLC.

   NOTE: If the ODS unit fails to initialize after several attempts, replace the OPDS sensor/seat-back and retry. If the ODS unit continues to fail to initialize, replace the ODS unit (see page 24-205).

ODS Unit Calibration

When you replace the SRS unit, front passenger's weight sensors or ODS unit, calibrate the ODS unit.

While calibrating the ODS unit, observe these precautions:

- Make sure all components of the front passenger's seat are correctly installed.
- Make sure nothing is on or under the front passenger's seat.
- Make sure there is nothing in the front passenger's seat-back pocket.
- Keep the windows moonroof closed.
- Do all calibration procedures except, test-driving, in the service bay.
- Make sure the vehicle is on level ground.
- Keep the A/C and the heater off.
- Do not touch the front passenger's seat during calibration, unless you are prompted to or when you have completed the calibration.
- Do not expose the front passenger's seat to sudden temperature changes.

1. Position the front passenger's seat to the rearmost position, and adjust the seat-back to the forwardmost position. Do not move the seat from these positions.

2. Make sure the ignition switch is in LOCK (0).

3. Connect the HDS to the data link connector (DLC) (A).

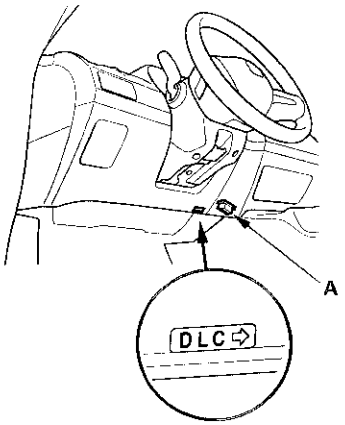

4. Turn the ignition switch to ON (II).

5. Make sure the HDS communicates with the vehicle and the SRS unit. If it does not communicate, troubleshoot the DLC circuit (see page 11-213).

6. Drive the vehicle, and accelerate to 20 mph (36 km/h), then stop on level ground.

7. From the Main Menu, select SRS, then Calibration, then Misc Test, then select SWS INITIALIZATION, and follow the prompts until the calibration is complete.

ODS Unit Operation Check

Check the ODS operation after any of these actions.
- Replacement of front passenger's seat component(s) (except ODS unit and/or weight sensors)
- After a vehicle collision
- SRS unit replacement

Pre-operation Check Set-up

- Make sure all the components of the front passenger's seat are correctly installed.
- Position the front passenger's seat to the rearmost position.
- Adjust the seat-back to the forwardmost position.
- Do not move the seat from this position.
- Make sure nothing is on or under the front passenger's seat.
- Make sure there is nothing in the front passenger's seat-back pocket.
- Keep the windows moonroof closed.
- Do all calibration procedures, except test-driving, in the service bay.
- Make sure the vehicle is on level ground.
- Turn the heater and the A/C off.
- Do not touch the front passenger's seat during the operation check.
- Do not expose the front passenger's seat to sudden temperature changes.
- Make sure all aftermarket devices such as amplifiers, fluorescent lights, air purifiers, CB or HAM radios, etc. are turned off.

After Replacing Front Passenger's Seat Component(s)

1. Make sure the ignition switch is in LOCK (0).
2. Connect the HDS to the data link connector (DLC) (A).

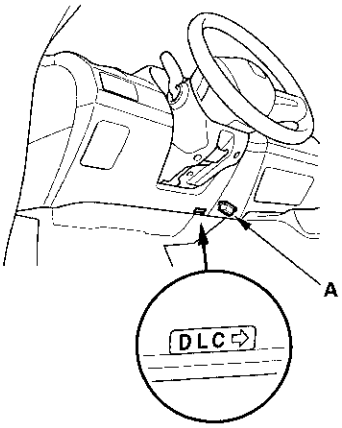

3. Turn the ignition switch to ON (II).
4. Make sure the HDS communicates with the vehicle and the SRS unit. If it does not communicate, troubleshoot the DLC circuit (see page 11-213).
5. Drive the vehicle, accelerate to 20 mph (36 km/h), then stop on level ground.
6. From the HDS Main Menu, select SRS, then Inspection. In the HDS Inspection Menu, select SEAT OUTPUT CHK and follow the prompts until the ODS unit operation check is complete.

Driver's Seat Position Sensor Operation Check

Check the driver's seat position after any of these actions.

- Driver's seat position sensor replacement
- Cover plate (front side of driver's seat slide rail) replacement

1. Make sure the driver's seat is at its full forward position.
2. Make sure the ignition switch is in LOCK (0).
3. Connect the HDS to the data link connector (DLC) (A).

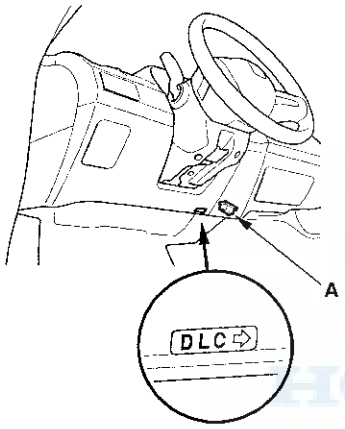

4. Turn the ignition switch to ON (II).
5. Make sure the HDS communicates with the vehicle and the SRS unit. If it does not communicate, troubleshoot the DLC circuit (see page 11-213).
6. From the HDS Main Menu, select SRS, Parameter information, Buckle Switch, then Seat Position Sensor.
7. Using a piece of tape (A), mark the location on the seat's outer cover (B) where the front riser cover meets the seat riser (C). The driver's seat position sensor should read NEAR.

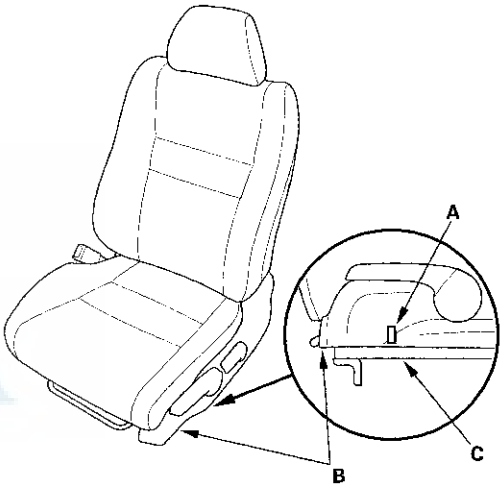

8. Move the seat back in small increments (about 5 mm, 0.2 in.) until the driver's seat position sensor reads NOT NEAR. The seat should be about 25 mm (1 in.) from the front.

   NOTE:
   - It takes a few seconds for the HDS to display changes, so wait about 5 seconds between each move.
   - If the driver's seat position sensor data does not work as described, check the driver's seat position sensor or the cover plate for damage, and replace parts as needed.

9. Turn the ignition switch to LOCK (0), and disconnect the HDS from the DLC.

DTC Troubleshooting Index

SRS Unit DTC	Detection Item	Notes
11-1x	Open in the driver's airbag first inflator	(see page 24-52)
11-3x	Short to another wire or decreased resistance in the driver's airbag first inflator	(see page 24-54)
11-4x	Open in the driver's airbag second inflator	(see page 24-52)
11-6x	Short to another wire or decreased resistance in the driver's airbag second inflator	(see page 24-54)
11-8x	Short to power in the driver's airbag first inflator	(see page 24-56)
11-9x	Short to ground in the driver's airbag first inflator	(see page 24-58)
11-Ax	Short to power in the driver's airbag second inflator	(see page 24-56)
11-Bx	Short to ground in the driver's airbag second inflator	(see page 24-58)
12-1x	Open in the front passenger's airbag first inflator	(see page 24-60)
12-3x	Short to another wire or decreased resistance in the front passenger's airbag first inflator	(see page 24-61)
12-4x	Open in the front passenger's airbag second inflator	(see page 24-60)
12-6x	Short to another wire or decreased resistance in the front passenger's airbag second inflator	(see page 24-61)
12-8x	Short to power in the front passenger's airbag first inflator	(see page 24-63)
12-9x	Short to ground in the front passenger's airbag first inflator	(see page 24-65)
12-Ax	Short to power in the front passenger's airbag second inflator	(see page 24-63)
12-Bx	Short to ground in the front passenger's airbag second inflator	(see page 24-65)
21-1x	Open in the driver's seat belt tensioner	(see page 24-66)
21-3x	Short to another wire or decreased resistance in the driver's seat belt tensioner	(see page 24-68)
21-8x	Short to power in the driver's seat belt tensioner	(see page 24-69)
21-9x	Short to ground in the driver's seat belt tensioner	(see page 24-71)
22-1x	Open in the front passenger's seat belt tensioner	(see page 24-72)
22-3x	Short to another wire or decreased resistance in the front passenger's seat belt tensioner	(see page 24-74)
22-8x	Short to power in the front passenger's seat belt tensioner	(see page 24-75)
22-9x	Short to ground in the front passenger's seat belt tensioner	(see page 24-77)
27-1x	Open in the driver's seat belt buckle tensioner	(see page 24-78)
27-3x	Short to another wire or decreased resistance in the driver's seat belt buckle tensioner	(see page 24-80)
27-8x	Short to power in the driver's seat belt buckle tensioner	(see page 24-81)
27-9x	Short to ground in the driver's seat belt buckle tensioner	(see page 24-83)
28-1x	Open in the front passenger's seat belt buckle tensioner	(see page 24-84)
28-3x	Short to another wire or decreased resistance in the front passenger's seat belt buckle tensioner	(see page 24-86)
28-8x	Short to power in the front passenger's seat belt buckle tensioner	(see page 24-87)
28-9x	Short to ground in the front passenger's seat belt buckle tensioner	(see page 24-89)
31-1x	Open in the driver's side airbag inflator	(see page 24-90)
31-3x	Short to another wire or decreased resistance in the driver's side airbag inflator	(see page 24-92)
31-8x	Short to power in the driver's side airbag inflator	(see page 24-93)
31-9x	Short to ground in the driver's side airbag inflator	(see page 24-95)
32-1x	Open in the front passenger's side airbag inflator	(see page 24-96)
32-3x	Short to another wire or decreased resistance in the front passenger's side airbag inflator	(see page 24-98)
32-8x	Short to power in the front passenger's side airbag inflator	(see page 24-100)
32-9x	Short to ground in the front passenger's side airbag inflator	(see page 24-101)
33-1x	Open in the left side curtain airbag inflator	(see page 24-103)
33-3x	Short to another wire or decreased resistance in the left side curtain airbag inflator	(see page 24-104)
33-8x	Short to power in the left side curtain airbag inflator	(see page 24-106)
33-9x	Short to ground in the left side curtain airbag inflator	(see page 24-108)
34-1x	Open in the right side curtain airbag inflator	(see page 24-109)
34-3x	Short to another wire or decreased resistance in the right side curtain airbag inflator	(see page 24-111)
34-8x	Short to power in the right side curtain airbag inflator	(see page 24-113)
34-9x	Short to ground in the right side curtain airbag inflator	(see page 24-114)

SRS Unit DTC	Detection Item	Notes
41-1x	No signal from the left front impact sensor	(see page 24-116)
41-2x	Internal failure of the left front impact sensor	(see page 24-121)
41-3x		
41-Bx		
42-1x	No signal from the right front impact sensor	(see page 24-118)
42-2x	Internal failure of the right front impact sensor	(see page 24-116)
42-3x		
42-Bx		
43-1x	No signal from the left side impact sensor (first)	(see page 24-122)
43-2x	Internal failure of the left side impact sensor (first)	(see page 24-127)
43-3x		
43-Bx		
44-1x	No signal from the right side impact sensor (first)	(see page 24-124)
44-2x	Internal failure of the right side impact sensor (first)	(see page 24-127)
44-3x		
44-Bx		
45-1x	No signal from the left side impact sensor (second)	(see page 24-128)
45-2x	Internal failure of the left side impact sensor (second)	(see page 24-133)
45-3x		
45-Bx		
46-1x	No signal from the right side impact sensor (second)	(see page 24-130)
46-2x	Internal failure of the right side impact sensor (second)	(see page 24-133)
46-3x		
46-Bx		
51-xx	Internal failure of the SRS unit	(see page 24-134)
52-xx		
53-xx		
54-xx		
55-xx		
61-1x	Open in the driver's seat belt buckle switch	(see page 24-135)
61-2x	Short in the driver's seat belt buckle switch	(see page 24-136)
62-1x	Open in the front passenger's seat belt buckle switch	(see page 24-137)
62-2x	Short in the front passenger's seat belt buckle switch	(see page 24-138)
71-1x	Open in the driver's seat position sensor	(see page 24-139)
71-2x	Short in the driver's seat position sensor	(see page 24-141)
81-4x	Internal failure of the ODS unit	(see page 24-146)
81-5x		
81-61	No signal from the ODS unit	(see page 24-143)
81-62	Non-stipulated data from the ODS unit	
81-63	Internal failure of the ODS unit	(see page 24-146)
81-64		
81-71	ODS unit does not calibrate	(see page 24-146)
81-78		
81-79	Front passenger's weight sensors initial check failure	(see page 24-147)

NOTE: The "x" at the end of each DTC denotes a numeric character (0 thru 9) or an alpha character (A thru F) that you will see on the HDS display. The character is unrelated to your troubleshooting; it designates the SRS unit manufacturer and other detail used for product analysis.

(cont'd)

DTC Troubleshooting Index (cont'd)

DTC	Detection Item	Notes
82-14	No signal from the front passenger's weight sensor (front inner side)	(see page 24-147)
82-15	Internal failure of the front passenger's weight sensor (front inner side)	(see page 24-151)
82-16	No signal from the front passenger's weight sensor (rear inner side)	(see page 24-152)
82-17	Internal failure of the front passenger's weight sensor (rear inner side)	(see page 24-151)
83-24	No signal from the front passenger's weight sensor (front outer side)	(see page 24-155)
83-25	Internal failure of the front passenger's weight sensor (front outer side)	(see page 24-151)
83-26	No signal from the front passenger's weight sensor (rear outer side)	(see page 24-159)
83-27	Internal failure of the front passenger's weight sensor (rear outer side)	(see page 24-151)
85-4x	Internal failure of the ODS unit	(see page 24-162)
85-5x		
85-61	No signal from the ODS unit	(see page 24-143)
85-62	Non-stipulated data from the ODS unit	
85-63	Internal failure of the ODS unit	(see page 24-162)
85-64		
85-71	ODS unit not initialize	(see page 24-163)
85-78		
85-79	OPDS sensor initial check failure	
86-1x	Faulty OPDS seat-back sensor	(see page 24-164)
86-2x	Faulty OPDS seat support sensor	
92-1x	Open in the passenger's airbag cutoff indicator	(see page 24-165)
92-2x	Open or short to ground in the passenger's airbag cutoff indicator	(see page 24-166)
A1-1x	Faulty power supply (VA line)	(see page 24-167)
A2-1x	Faulty power supply (VB line)	(see page 24-169)
B2-1x	No signal from the rear safing sensor	(see page 24-170)
B2-17	Internal failure of the rear safing sensor	(see page 24-173)
B2-8x		
B2-9x		
B2-Ax		
B2-Bx		
Ex-11	Control operation recorded	(see page 24-134)
Fx-11	Airbags and/or tensioners deployment recorded	(see page 24-135)

NOTE: The "x" at the end of each DTC denotes a numeric character (0 thru 9) or an alpha character (A thru F) that you will see on the HDS display. The character is unrelated to your troubleshooting; it designates the SRS unit manufacturer and other detail used for product analysis.

Only read DTCs from the SRS menu, not from the SWS menus unless instructed to check SWS DTCs. SWS (ODS unit) DTCs are subcodes of SRS unit DTCs. Only troubleshoot the corresponding SRS DTCs.

SWS DTC Index

SRS Unit DTC	SWS DTC	Detection Item	Notes
81-4x	41-xx	Internal failure of the ODS unit	(see page 24-174)
	42-xx		
	43-xx		
82-14	14-11	Short to power in the front passenger's weight sensor (front inner side) power circuit	(see page 24-175)
	14-12	Short to ground in the front passenger's weight sensor (front inner side) power circuit	
	14-13	Open in the front passenger's weight sensor (front inner side) output circuit	
	14-14	Short to ground in the front passenger's weight sensor (front inner side) output circuit	
82-15	15-3x	Internal failure of the front passenger's weight sensor (front inner side)	(see page 24-177)
82-16	16-11	Short to power in the front passenger's weight sensor (rear inner side) power circuit	(see page 24-175)
	16-12	Short to ground in the front passenger's weight sensor (rear inner side) power circuit	
	16-13	Open in the front passenger's weight sensor (rear inner side) output circuit	
	16-14	Short to ground in the front passenger's weight sensor (rear inner side) output circuit	
82-17	17-3x	Internal failure of the front passenger's weight sensor (rear inner side)	(see page 24-177)
83-24	24-11	Short to power in the front passenger's weight sensor (front outer side) power circuit	(see page 24-176)
	24-12	Short to ground in the front passenger's weight sensor (front outer side) power circuit	
	24-13	Open in the front passenger's weight sensor (front outer side) output circuit	
	24-14	Short to ground in the front passenger's weight sensor (front outer side) output circuit	
83-25	25-3x	Internal failure of the front passenger's weight sensor (front outer side)	(see page 24-177)
83-26	26-11	Short to power in the front passenger's weight sensor (rear outer side) power circuit	(see page 24-176)
	26-12	Short to ground in the front passenger's weight sensor (rear outer side) power circuit	
	26-13	Open in the front passenger's weight sensor (rear outer side) output circuit	
	26-14	Short to ground in the front passenger's weight sensor (rear outer side) output circuit	
83-27	27-3x	Internal failure of the front passenger's weight sensor (rear outer side)	(see page 24-177)
81-71	71-xx	ODS unit does not calibrate	(see page 24-174)

NOTE: The "x" at the end of each DTC denotes a numeric character (0 thru 9) or an alpha character (A thru F) that you will see on the HDS display. The character is unrelated to your troubleshooting; it designates the SRS unit manufacturer and other detail used for product analysis.

Symptom Troubleshooting Index

Symptom	Diagnostic procedure	Also check for
SRS indicator does not come on	Symptom Troubleshooting (see page 24-177)	Communication with the HDS
SRS indicator stays on, but no DTCs are stored	Symptom Troubleshooting (see page 24-178)	• Charging system for under or overcharging • Communication with the HDS
Side airbag cutoff indicator flashes	Check the DTC. If a DTC indicated, go to the DTC troubleshooting	• Initialize the ODS unit • Communication with the HDS
Side airbag cutoff indicator stays on	Symptom Troubleshooting (see page 24-179)	Communication with the HDS
Side airbag cutoff indicator does not come on	Symptom Troubleshooting (see page 24-179)	• Initialize the ODS unit • Communication with the HDS
Passenger's airbag cutoff indicator flashes	Check the DTC. If a DTC indicated, go to the DTC troubleshooting	• Calibration the ODS unit • Communication with the HDS
Passenger's airbag cutoff indicator stays on or comes on suddenly	Symptom Troubleshooting (see page 24-180)	Communication with the HDS
Passenger's airbag cutoff indicator does not come on	Check the DTC. If a DTC indicated, go to the DTC troubleshooting	Communication with the HDS
HDS does not communicate with the SRS unit or the vehicle	Troubleshoot the DLC circuit (see page 11-213)	Communication with the HDS

HONDA

System Description

SRS Components

Airbags
The SRS is a safety device which, when used with the seat belt, is designed to help protect the driver and front passenger in a frontal impact exceeding a certain set limit. The system consists of the SRS unit, including safing sensor and impact sensor (A), the cable reel (B), the driver's airbag (C), the front passenger's airbag (D), side airbags (E), side curtain airbags (F), seat belt tensioners (G), seat belt buckle tensioners (H), side impact sensors (first) (I), front impact sensors (J), rear safing sensor (K) and side impact sensors (second) (L).
Since the driver's and front passenger's airbags use the same sensors, both normally inflate at the same time. However, it is possible for only one airbag to inflate. This can occur when collision severity is near the threshold for airbag deployment. In such case, the SRS system will only deploy airbags when the protection provided by the seat belt is insufficient.

Front Passenger's Weight Sensors
The front passenger's weight sensors (M) are part of seat base. The front passenger's weight sensors detect the weight on the seat, and send the information to the ODS unit (N). If the total weight is about 65 lbs (30 kg) or less, the ODS unit sends a signal to the SRS unit to prevent the passenger's airbag from deploying. When the passenger's airbag is disabled, the passenger airbag cutoff indicator on the center panel comes on to alert the driver that the front passenger's airbag will not deploy in a front-end collision.

Driver's Seat Position Sensor
The driver's seat position sensor (O) is under the driver's seat on the left side. When the driver's seat is moved to its full forward position, the deployment of the driver's airbag is moderated to decrease its force of impact during a front-end collision.

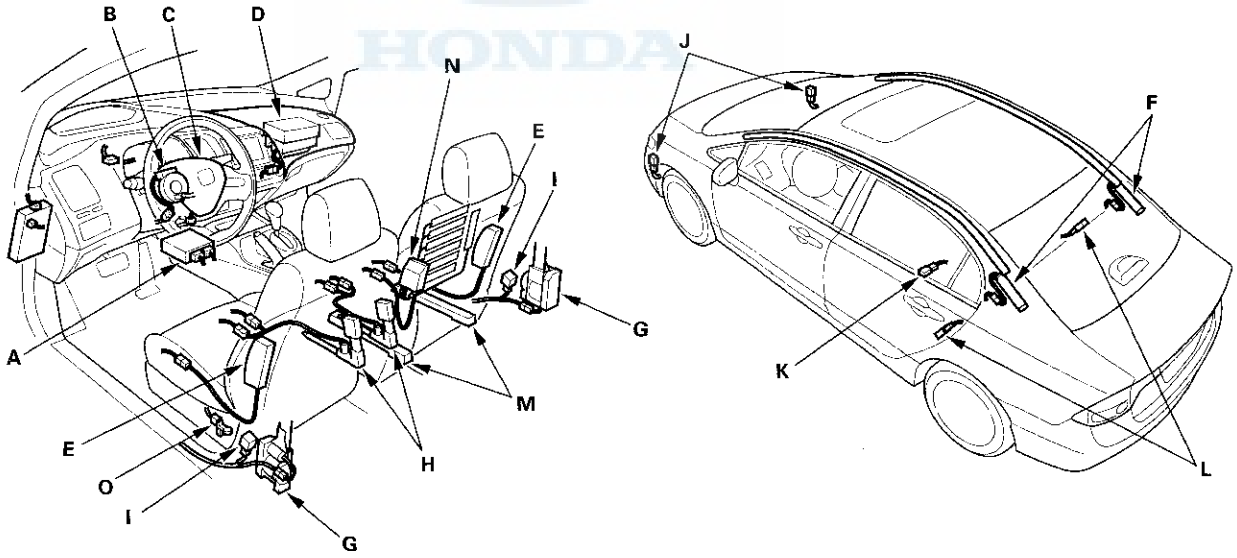

(cont'd)

System Description (cont'd)

Rear Safing Sensor
The rear safing sensor is located under the rear seat. The rear safing sensor performs the same basic function as the safing sensor in the SRS unit. It measures sideways G force, such as the force the vehicle would receive in a side collision in the rear, and sends that information to the SRS unit. The SRS unit uses that information, and the information from the second side impact sensors to determine the side that is impacted and the force. If the threshold is met, the SRS unit deploys the side airbag, the side curtain airbag, and the seat belt tensioner on that side.

Side Airbag Cutoff Indicator/OPDS Operation

The indicator comes on when the front passenger's seat is occupied by a small adult or child who is leaning into the deployment path, or when an object (grocery bag, briefcase, purse, etc.) is in the seat. This indicates the passenger's side airbag is off and will not deploy; there is no problem with the side airbag. If the passenger sits upright or moves to another seat, or you remove the object from the seat, the light should go off. There will be some delay between the occupant's repositioning and when the indicator will turn on or off.

Passenger Airbag Cutoff Indicator

The indicator comes on if the weight on the front passenger's seat is about 65 lbs (30 kg) or less. This indicates the passenger's front airbag is off and will not deploy. The front airbag is shut off to reduce the chance of airbag-caused injuries.

SRS Operation

The main circuit in the SRS unit senses and analyzes the force of impact and, if necessary, ignites the inflator charges. If battery voltage is too low or power is disconnected due to the impact, the voltage regulator and the back-up power circuit will keep voltage at a constant level.

For the SRS to Operate

Seat Belt Tensioners and Seat Belt Buckle Tensioners
(1) A front impact sensor, side impact sensor, or the rear safing sensor must activate and send electric signals to the microprocessor.
(2) The microprocessor must compute the signals and trigger the tensioners.
(3) The charges must ignite and deploy the tensioners.

Driver's and Front Passenger's Airbag(s)
(1) A front impact sensor must activate and send electric signals to the microprocessor.
(2) The microprocessor must compute the signals and trigger the airbag inflator(s).
(3) The triggered inflators must ignite and deploy the airbags.

Side Airbag(s)
(1) A side impact sensor must activate and send electric signals to the microprocessor.
(2) The microprocessor must compute the signals and trigger the side airbag inflator(s). However, the microprocessor does not trigger the front passenger's side airbag if the SRS unit determines that the front passenger's head is in the deployment path of the side airbag.
(3) The triggered inflators must ignite and deploy the side airbags.

Side Curtain Airbag(s)
(1) Side impact sensor or the rear safing sensor must activate triggered inflators, and send electrical signals to the microprocessor.
(2) The microprocessor must compute the signals and trigger the side curtain airbag and side airbag inflator(s).
(3) The triggered inflators must ignite and deploy the side curtain airbag and side airbag at the same time.

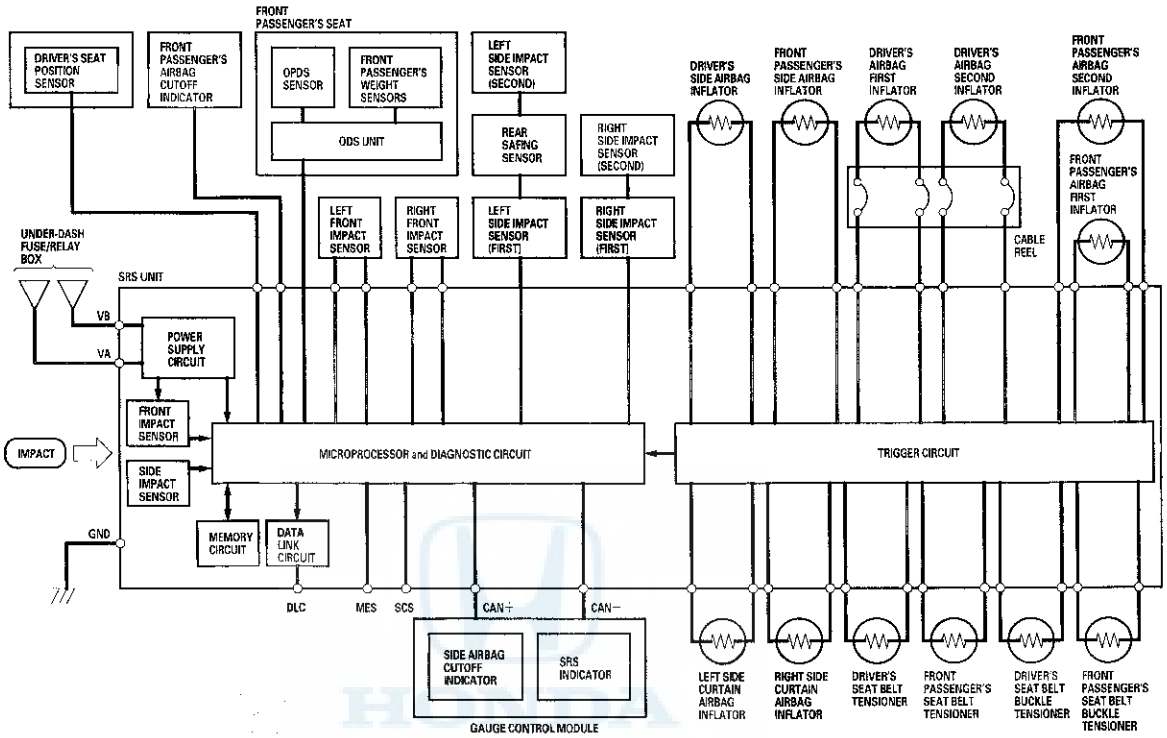

Self-diagnostic System

A self-diagnostic circuit is built into the SRS unit; when the ignition switch is turned to ON (II), the SRS indicator comes on and goes off after about 6 seconds if the system is operating normally.
If the indicator does not come on, or does not go off after 6 seconds, or comes on while driving, it indicates an abnormality in the system. The system must be inspected and repaired as soon as possible.

For better serviceability, the SRS unit memory stores DTCs related to the cause of the malfunction, and the unit is connected to the data link connector (DLC). This information can be read with the HDS when it is connected to the DLC (see page 24-22).

NOTE: Before you disconnect the negative cable from the battery for troubleshooting, review Battery Terminal Disconnection and Reconnection (see page 22-62).

(cont'd)

System Description (cont'd)

SRS Unit Inputs and Outputs at Connector A (28P)

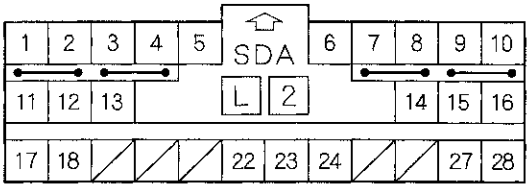

Wire side of female terminals

Terminal Number	Wire Color	Terminal Name	Description
1	GRN*	LA2+	Power source for the driver's airbag second inflator
2	PUR*	LA2−	Ground for the driver's airbag second inflator
3	LT GRN*	RA2+	Power source for the front passenger's airbag second inflator
4	LT BLU*	RA2−	Ground for the front passenger's airbag second inflator
5	LT GRN*	MES	Memory clear signal input
6	ORN*	SCS	Service check signal input
7	LT BLU*	LA1+	Power source for the driver's airbag first inflator
8	BRN*	LA1−	Ground for the driver's airbag first inflator
9	YEL*	RA1+	Power source for the front passenger's airbag first inflator
10	BLU*	RA1−	Ground for the front passenger's airbag first inflator
11	WHT*	CAN HI	Sends and receives communication signal with the gauge control module
12	RED*	CAN LO	Sends and receives communication signal with the gauge control module
13	BLU*	PTT	Passenger's airbag cutoff indicator output line
14	GRN*	ODS	Sends and receives communication signal with the ODS unit
15	BRN*	LFS−	Ground for the left front impact sensor
16	LT BLU*	RFS−	Ground for the right front impact sensor
17	YEL*	VA	SRS system sub power (common with ODS)
18	RED*	VB	SRS dedicated power (dedicated booster circuit)
22	BLK*	SRS GND (1)	Ground circuit for the SRS (G506)
23	BLK*	SRS GND (2)	Ground circuit for the SRS (G506)
24	LT BLU*	K-LINE	Sends and receives scan tool signal (serial data)
27	RED*	LFS+	Power source for the left front impact sensor
28	GRN*	RFS+	Power source for the right front impact sensor

* : BLU or BRN wires may be substituted for the wire colors in this table.

SRS Unit Inputs and Outputs at Connector B (28P)

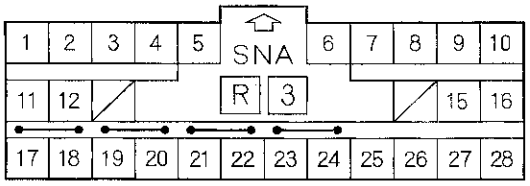

Wire side of female terminals

Terminal Number	Wire Color	Terminal Name	Description
1	RED*	LRP+	Power source for the driver's seat belt tensioner
2	BRN*	LRP−	Ground for the driver's seat belt tensioner
3	GRN*	RRP+	Power source for the front passenger's seat belt tensioner
4	LT BLU*	RRP−	Ground for the front passenger's seat belt tensioner
5	GRY*	SS−	Ground for the driver's seat position sensor
6	LT GRN*	SS+	Power source for the driver's seat position sensor
7	ORN*	LBP+	Power source for the driver's seat belt buckle tensioner
8	GRN*	LBP−	Ground for the driver's seat belt buckle tensioner
9	YEL*	RBP+	Power source for the front passenger's seat belt buckle tensioner
10	WHT*	RBP−	Ground for the front passenger's seat belt buckle tensioner
11	YEL*	LBSC	Driver's seat belt buckle switch un-buckled signal
12	LT GRN*	LBSO	Driver's seat belt buckle switch buckled signal
15	BLU*	RBSC	Front passenger's seat belt buckle switch un-buckled signal
16	ORN*	RBSO	Front passenger's seat belt buckle switch buckled signal
17	GRN*	LSA+	Power source for the driver's side airbag inflator
18	RED*	LSA−	Ground for the driver's side airbag inflator
19	WHT*	RSA+	Power source for the front passenger's side airbag inflator
20	BLU*	RSA−	Ground for the front passenger's side airbag inflator
21	BRN*	LCA1+	Power source for the left side curtain airbag inflator
22	BLU*	LCA1−	Ground for the left side curtain airbag inflator
23	GRY*	RCA1+	Power source for the right side curtain airbag inflator
24	RED*	RCA1−	Ground for the right side curtain airbag inflator
25	PNK*	LBS1+	Power source for the left side impact sensor (first), left side impact sensor (second), and rear safing sensor
26	BLU*	LBS1−	Ground for the left side impact sensor (first), left side impact sensor (second), and rear safing sensor
27	BRN*	RBS1+	Power source for the right side impact sensor (first) and right side impact sensor (second)
28	YEL*	RBS1−	Ground for the right side impact sensor (first) and right side impact sensor (second)

* : BLU or BRN wires may be substituted for the wire colors in this table.

Circuit Diagram

'06 model

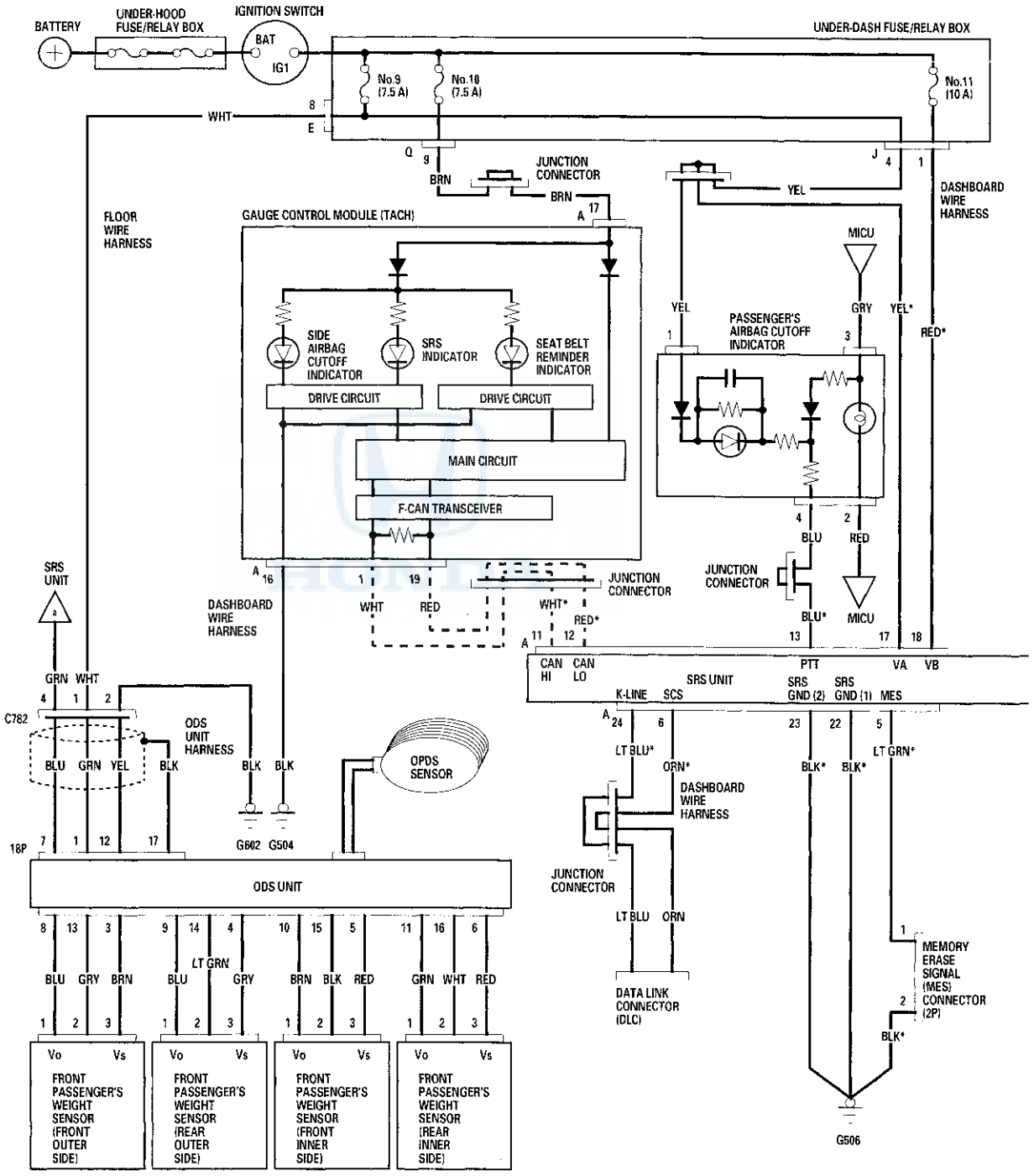

BLU or BRN wire color
can be used for the SRS circuits
that have a * mark

- - - - - - - - - - : Shielding
- - - - - - - - - - : CAN line

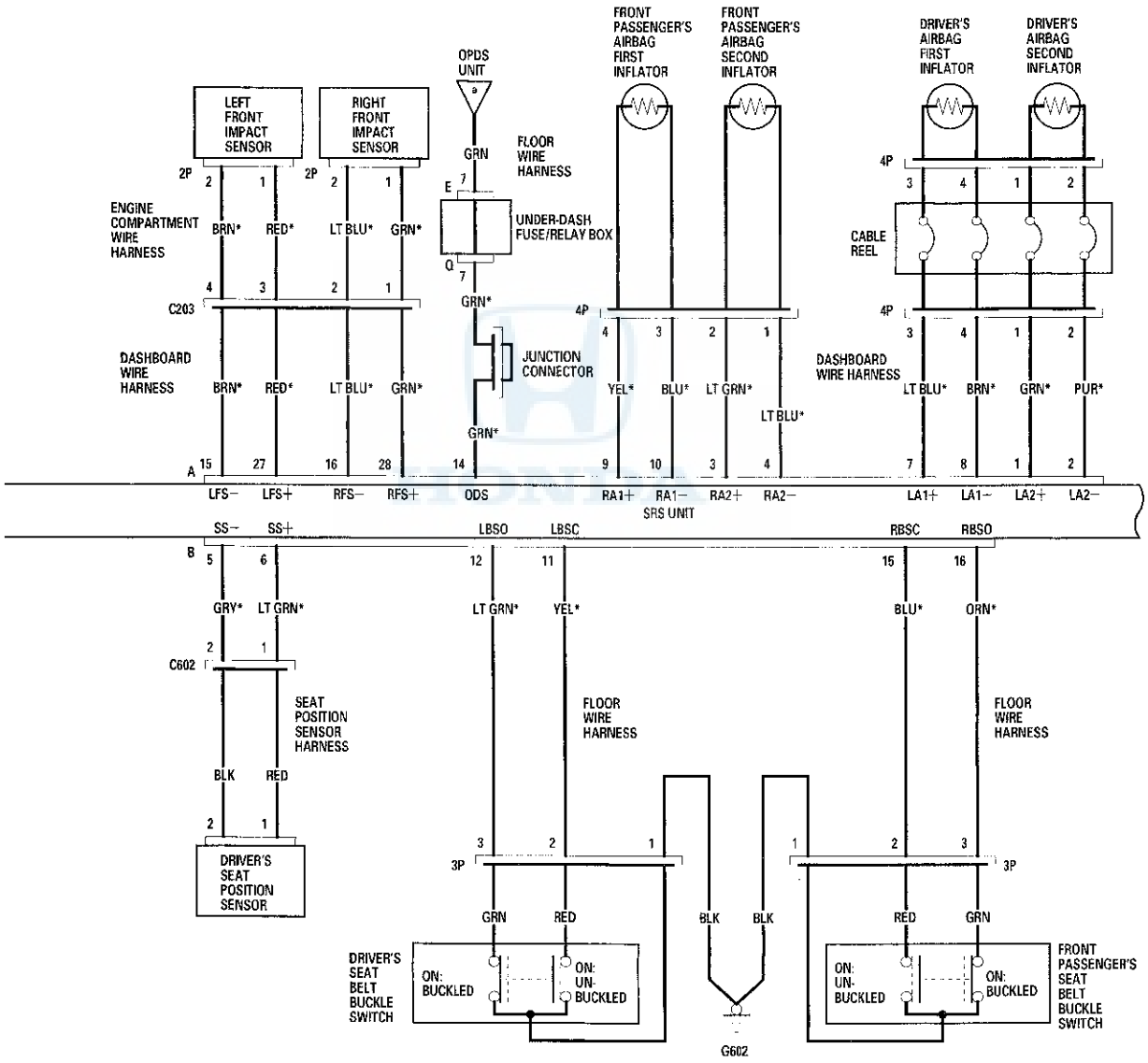

(cont'd)

Circuit Diagram (cont'd)

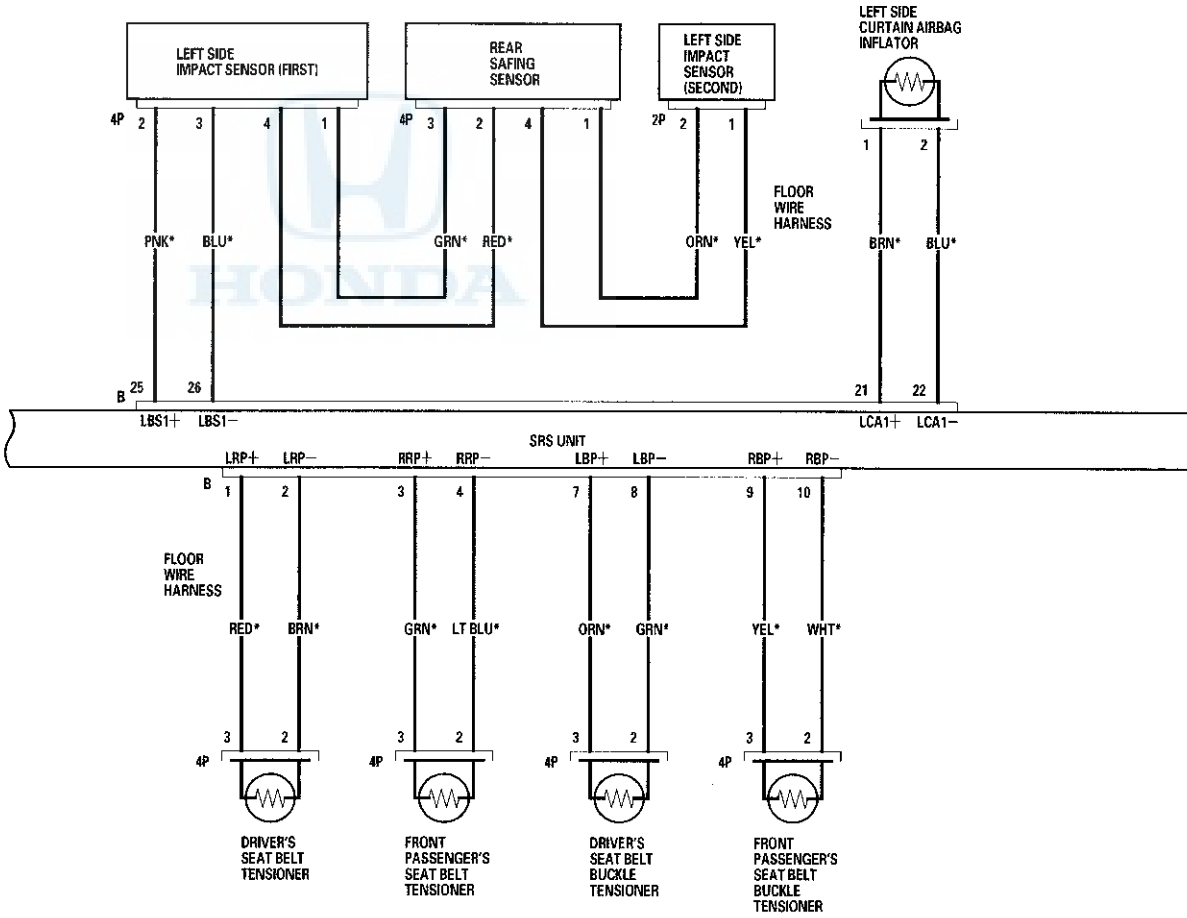

BLU or BRN wire color
can be used for the SRS circuits
that have a * mark

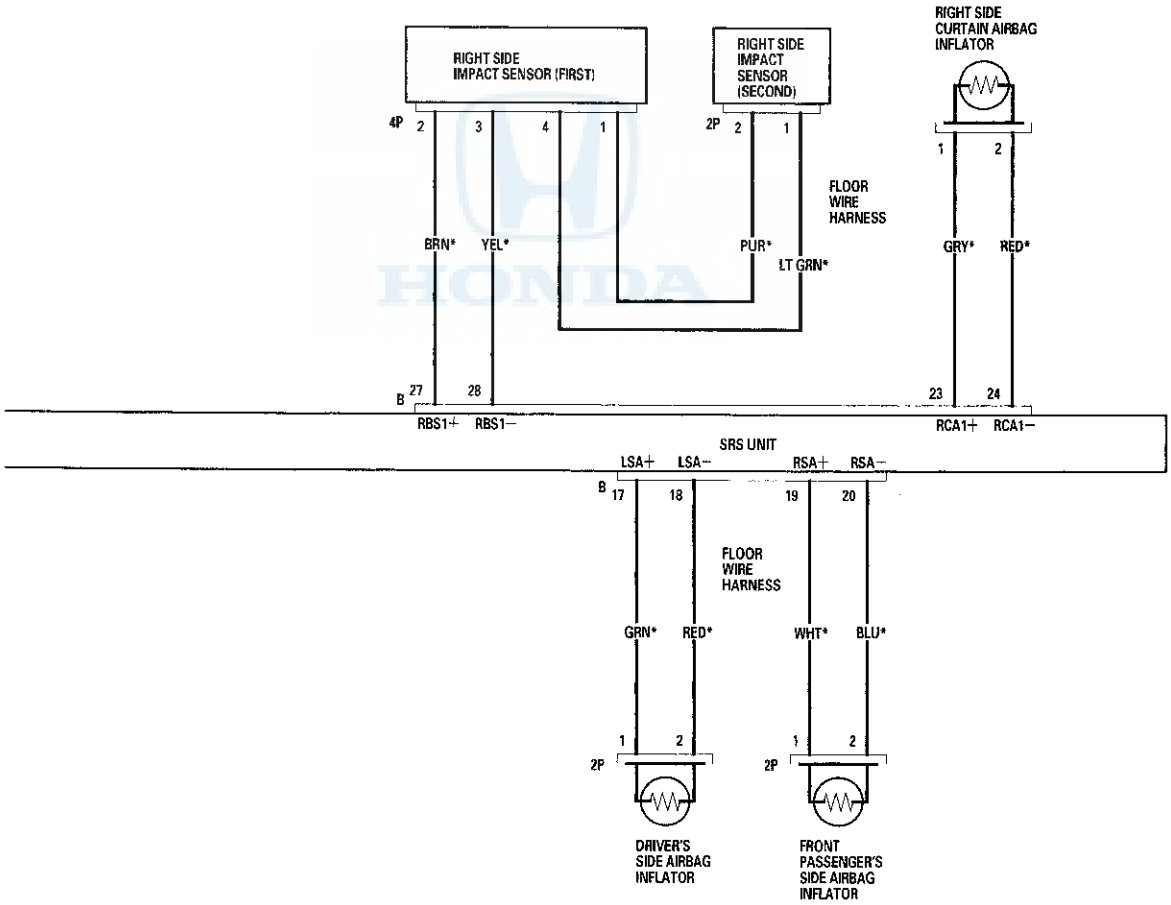

Circuit Diagram (cont'd)

'07-08 models

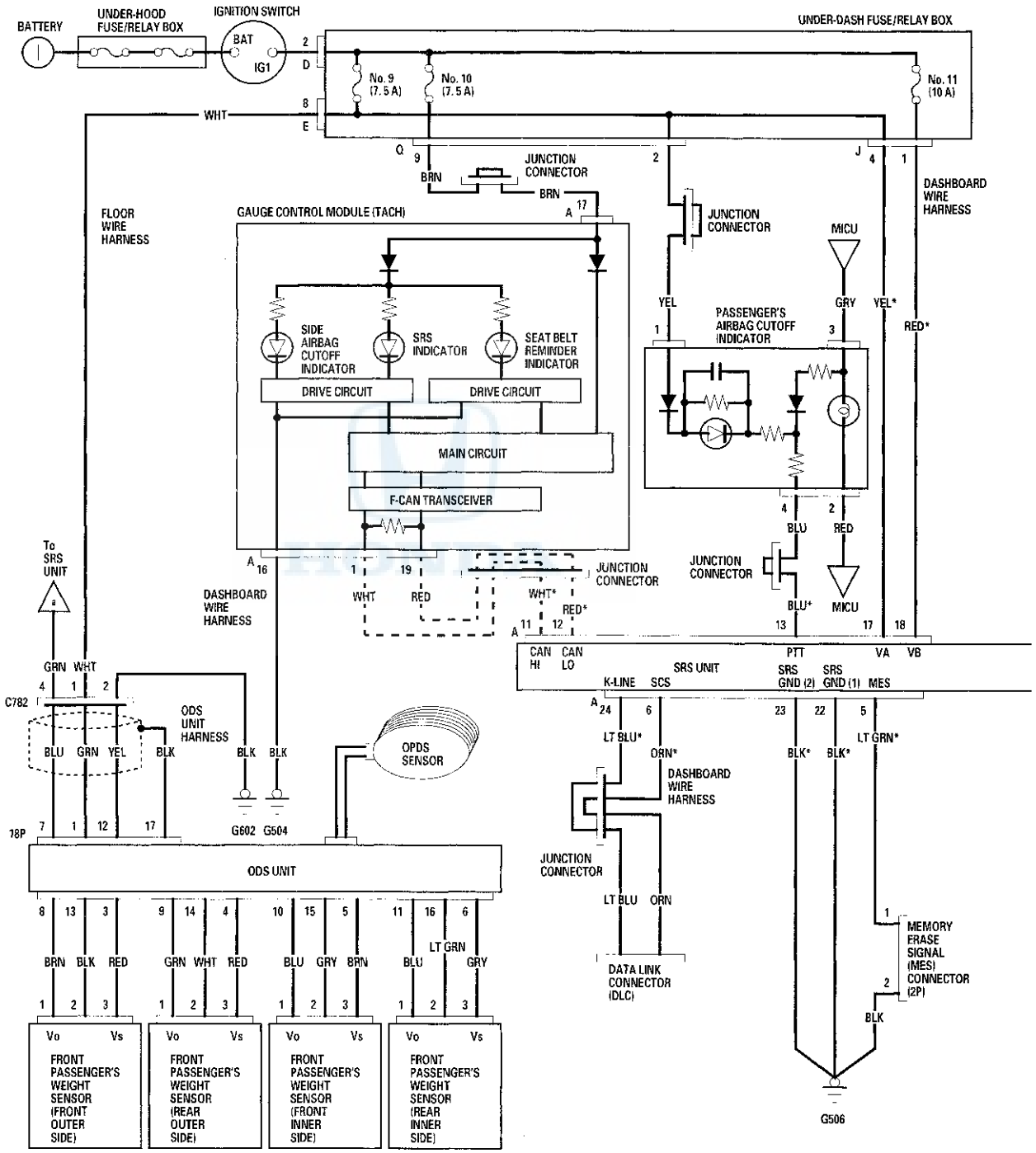

BLU or BRN wire color
can be used for the SRS circuits
that have a * mark

---------- : Shielding
---------- : CAN line

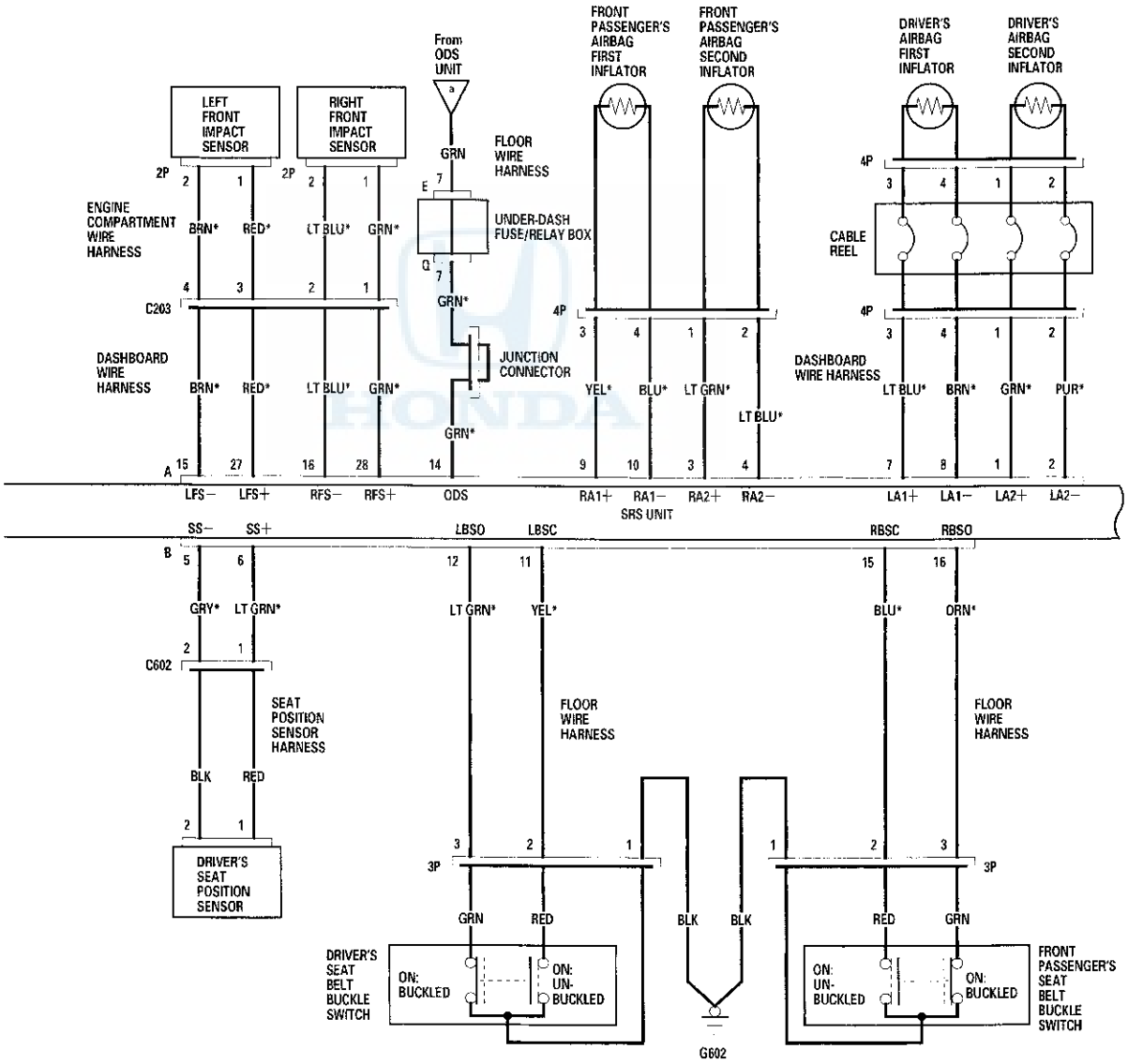

(cont'd)

Circuit Diagram (cont'd)

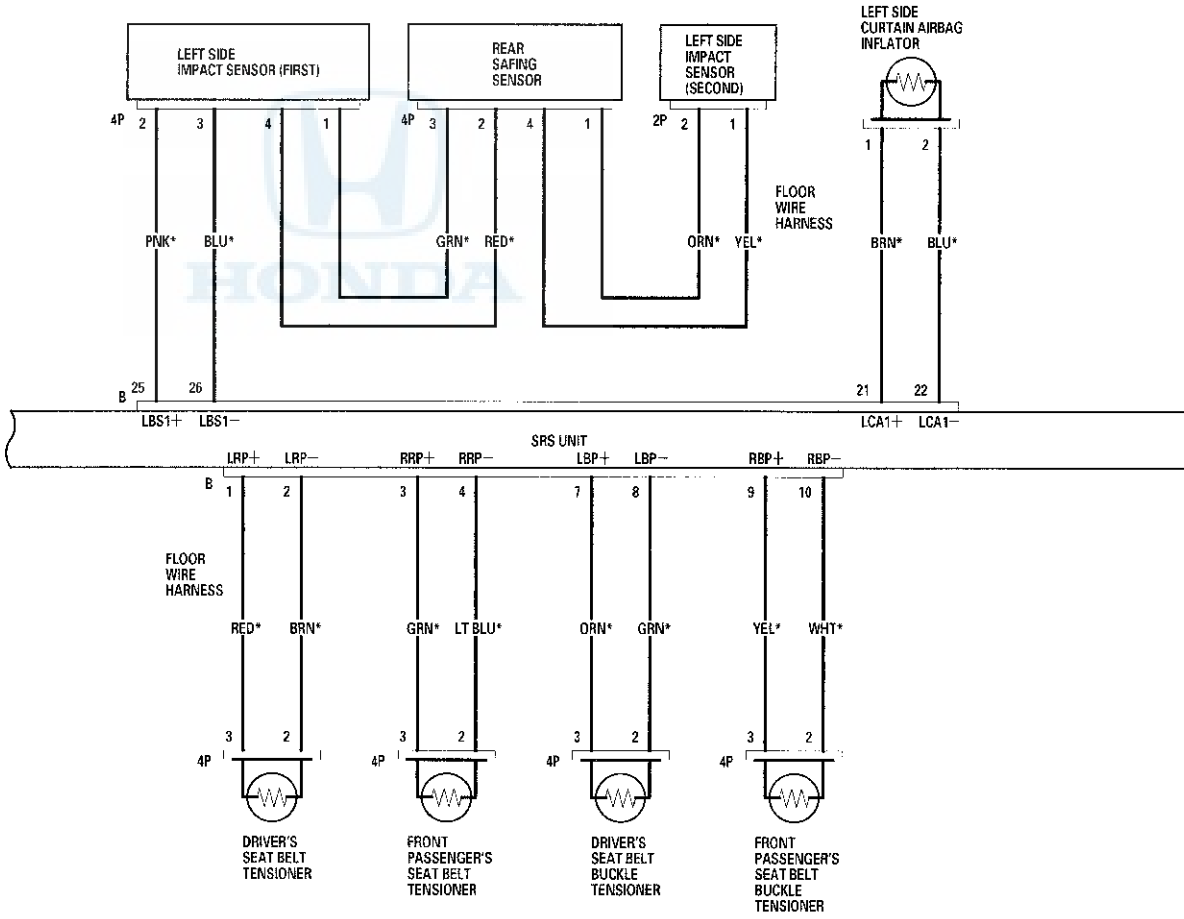

BLU or BRN wire color
can be used for the SRS circuits
that have a * mark

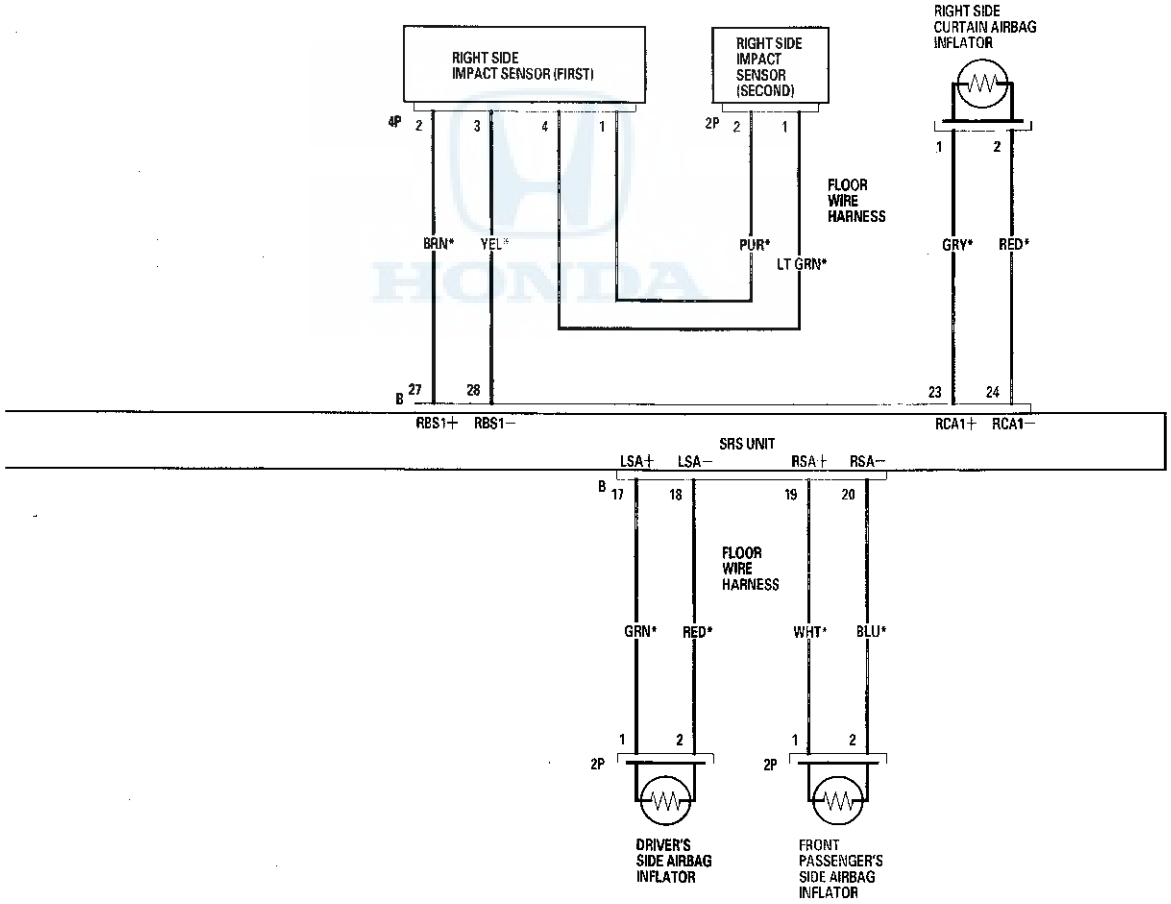

Circuit Diagram (cont'd)

'09 model

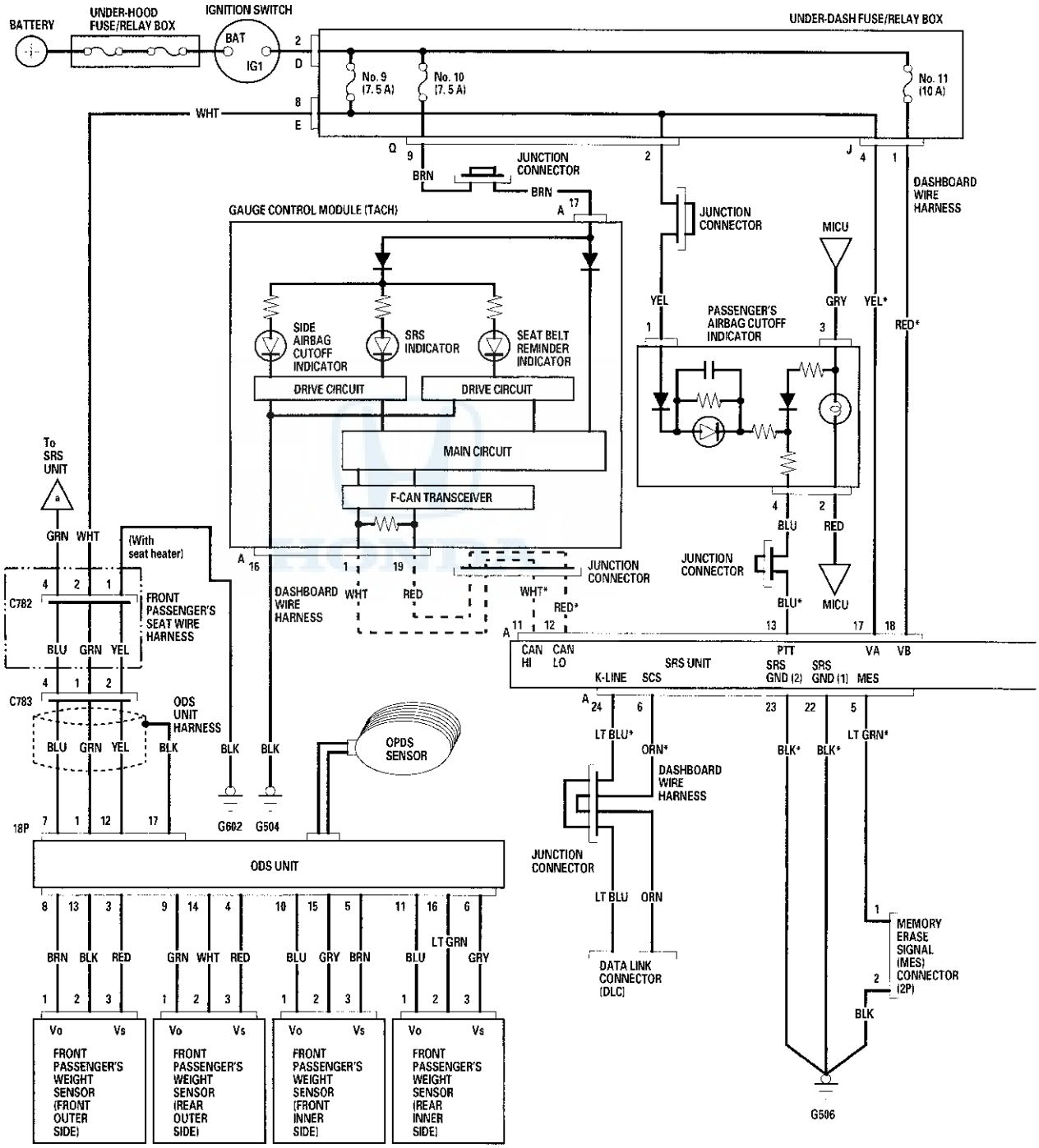

BLU or BRN wire color
can be used for the SRS circuits
that have a * mark

- - - - - - - - - - : Shielding
- - - - - - - - - - : CAN line

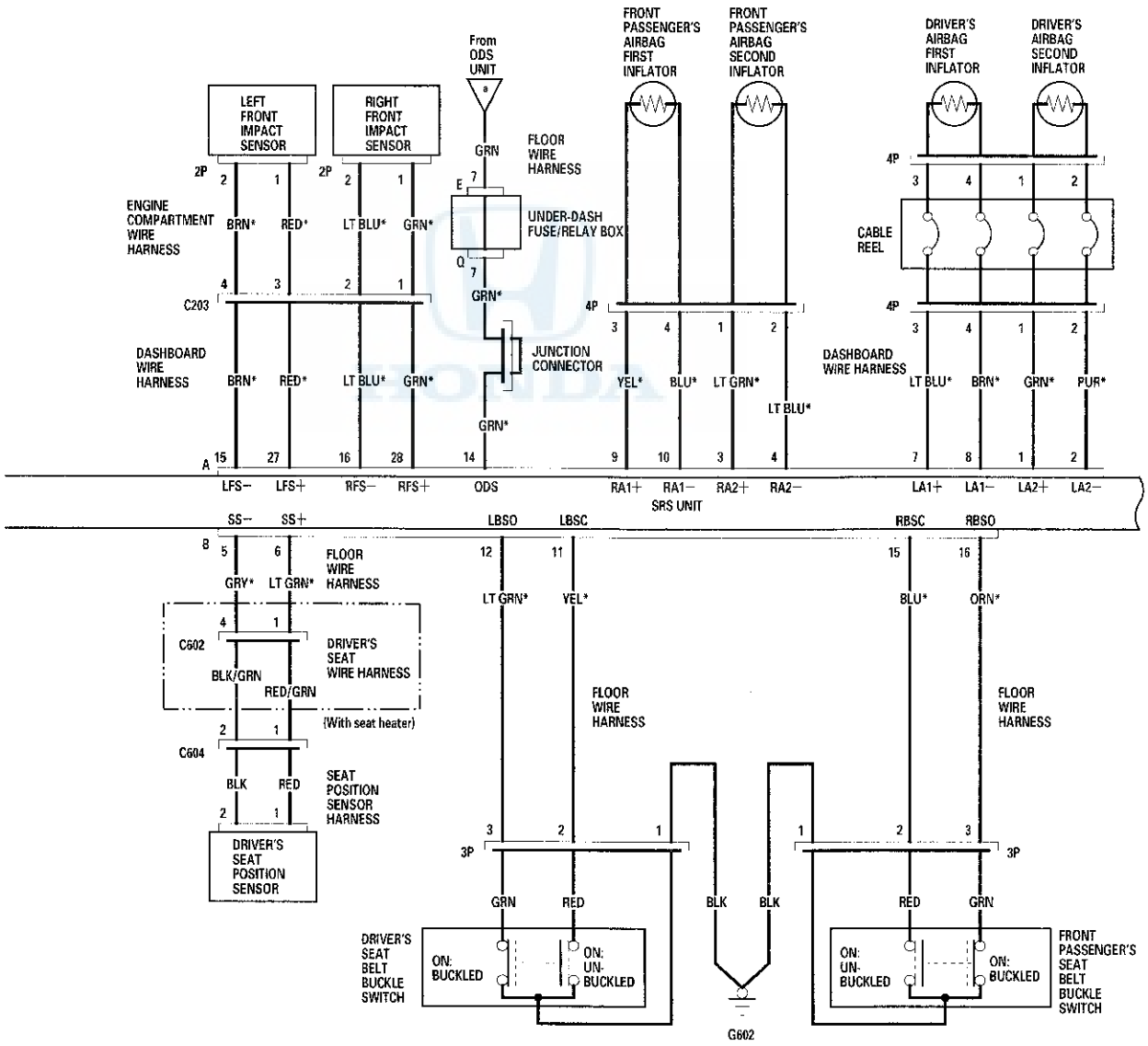

(cont'd)

Circuit Diagram (cont'd)

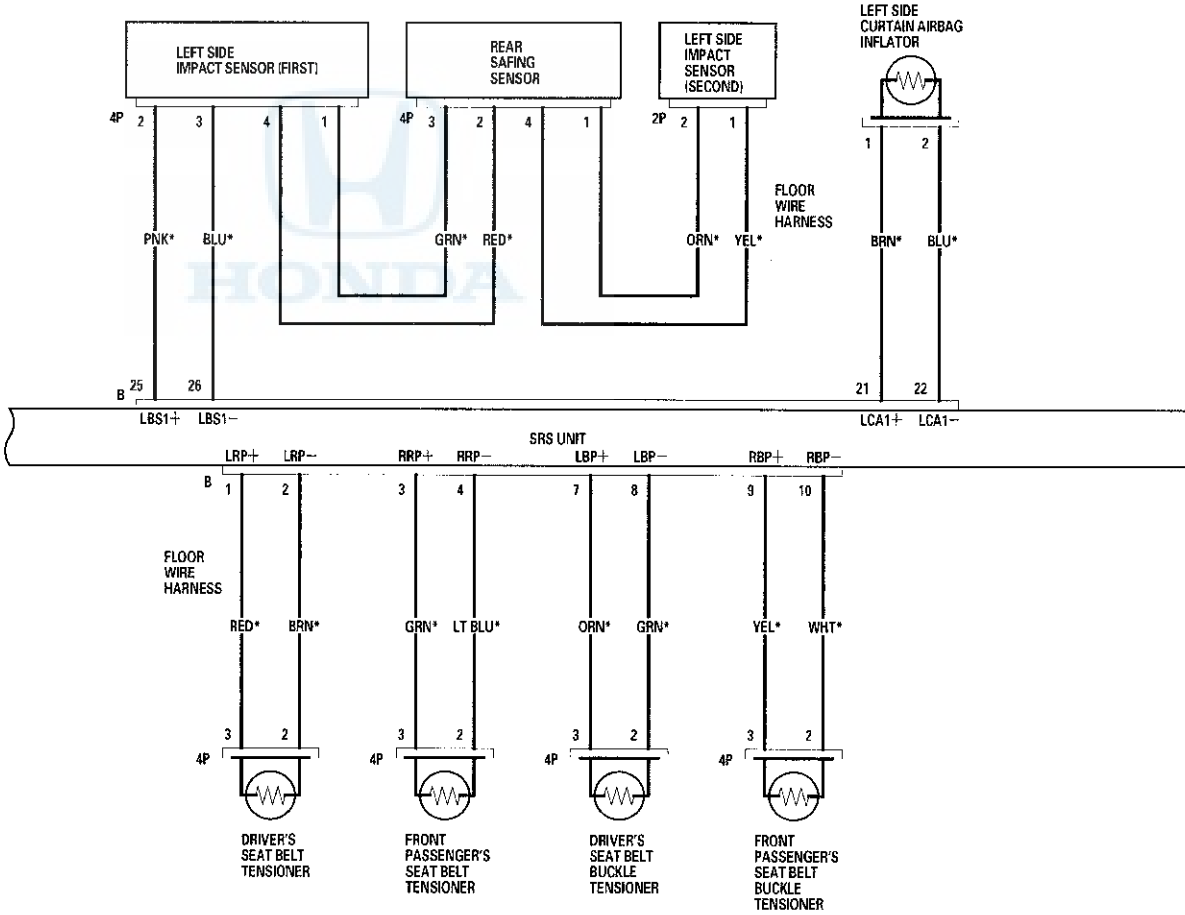

BLU or BRN wire color
can be used for the SRS circuits
that have a * mark

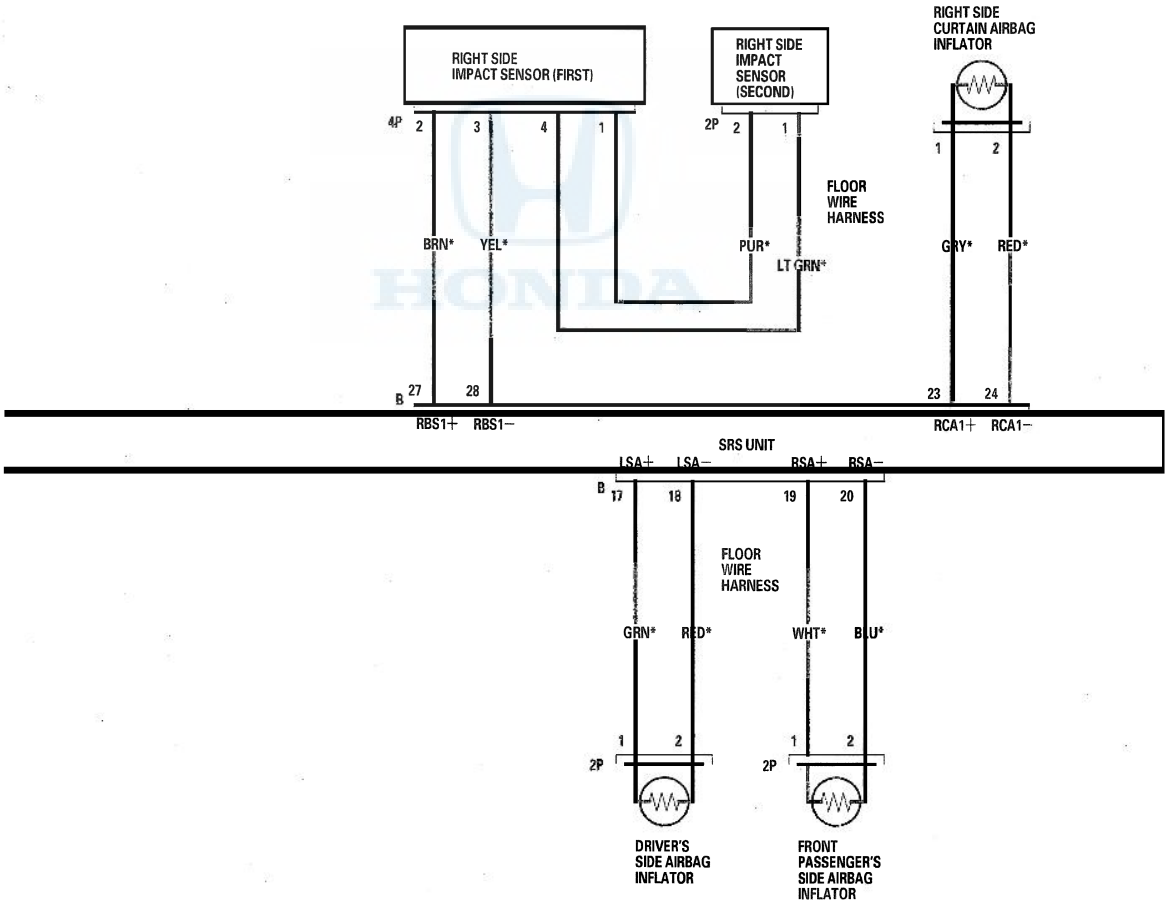

DTC Troubleshooting

DTC 11-1x ("x" can be 0 thru 9 or A thru F): Open in the Driver's Airbag First Inflator

DTC 11-4x ("x" can be 0 thru 9 or A thru F): Open in the Driver's Airbag Second Inflator

Special Tools Required
- SRS inflator simulator 07SAZ-TB4011A
- SRS simulator lead J 070AZ-SNAA100

NOTE: Before doing this troubleshooting procedure, review SRS Precautions and Procedures (see page 24-13), General Troubleshooting Information (see page 24-22), and Battery Terminal Disconnection and Reconnection (see page 22-62).

1. Clear the DTC memory (see page 24-23).

2. Turn the ignition switch to ON (II), and check that the SRS indicator comes on for about 6 seconds and then goes off.

   Does the SRS indicator stay on, and is DTC 11-1x or 11-4x indicated?

   YES—Go to step 3.

   NO—Intermittent failure, system is OK at this time. Go to Troubleshooting Intermittent Failures (see page 24-24). If another DTC is indicated, troubleshoot the DTC.■

3. Turn the ignition switch to LOCK (0). Disconnect the negative cable from the battery, then wait at least 3 minutes.

4. Disconnect the driver's airbag 4P connector (A) from the cable reel.

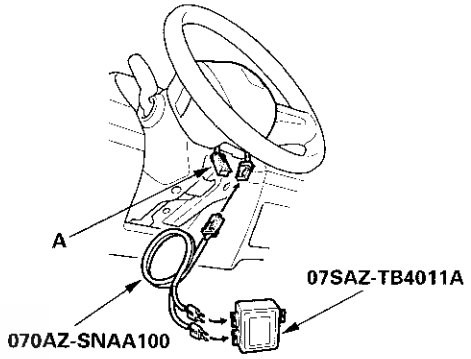

5. Connect the SRS inflator simulator (2 Ω connectors) and simulator lead J to the cable reel.

6. Reconnect the negative cable to the battery.

7. Clear the DTC memory.

8. Read the DTC (see page 24-22).

   Is DTC 11-1x or 11-4x indicated?

   YES—Go to step 9.

   NO—Open in the driver's airbag first or second inflator; replace the driver's airbag (see page 24-184), then clear the DTC.■

9. Turn the ignition switch to LOCK (0). Disconnect the negative cable from the battery, then wait at least 3 minutes.

10. Remove the column cover (see page 17-10), then disconnect the dashboard wire harness 4P connector (A) from the cable reel.

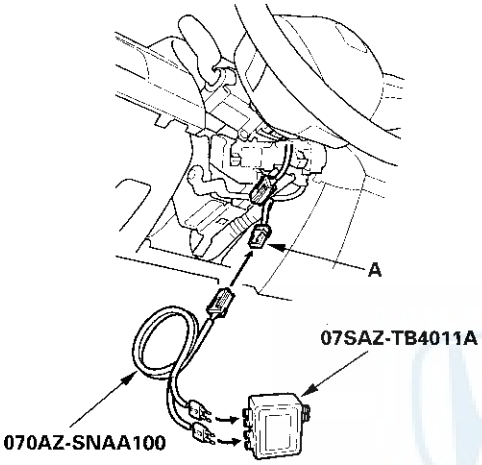

11. Connect the SRS inflator simulator (2 Ω connectors) and the simulator lead to the dashboard wire harness.

12. Reconnect the negative cable to the battery.

13. Clear the DTC memory.

14. Read the DTC.

Is DTC 11-1x or 11-4x indicated?

YES—Go to step 15.

NO—Open in the cable reel; replace the cable reel (see page 24-196), then clear the DTC. ■

15. Turn the ignition switch to LOCK (0). Disconnect the negative cable from the battery, then wait at least 3 minutes.

16. Disconnect SRS unit connector A (28P) from the SRS unit (see step 9 on page 24-21).

17. Disconnect the SRS inflator simulator from the SRS simulator lead. Do not disconnect the simulator lead from the dashboard wire harness 4P connector.

18. Measure the resistance between the terminals of both SRS simulator leads. There should be less than 1.0 Ω.

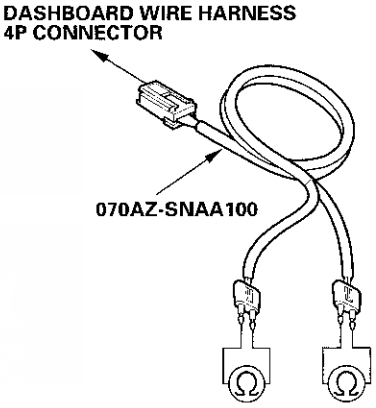

Is the resistance as specified?

YES—Faulty SRS unit or poor connection at SRS unit connector A (28P) and the SRS unit. Check the connection between the connector and the SRS unit. If the connection is OK, replace the SRS unit (see page 24-199). ■

NO—Open in the dashboard wire harness; replace the dashboard wire harness, then clear the DTC. ■

DTC Troubleshooting (cont'd)

DTC 11-3x ("x" can be 0 thru 9 or A thru F): Short to Another Wire or Decreased Resistance in the Driver's Airbag First Inflator

DTC 11-6x ("x" can be 0 thru 9 or A thru F): Short to Another Wire or Decreased Resistance in the Driver's Airbag Second Inflator

Special Tools Required
- SRS inflator simulator 07SAZ-TB4011A
- SRS simulator lead J 070AZ-SNAA100
- SRS short canceller 070AZ-SAA0100

NOTE: Before doing this troubleshooting procedure, review SRS Precautions and Procedures (see page 24-13), General Troubleshooting Information (see page 24-22), and Battery Terminal Disconnection and Reconnection (see page 22-62).

1. Clear the DTC memory (see page 24-23).

2. Turn the ignition switch to ON (II), and check that the SRS indicator comes on for about 6 seconds and then goes off.

   Does the SRS indicator stay on, and is DTC 11-3x or 11-6x indicated?

   YES—Go to step 3.

   NO—Intermittent failure, system is OK at this time. Go to Troubleshooting Intermittent Failures (see page 24-24). If another DTC is indicated, troubleshoot the DTC. ■

3. Turn the ignition switch to LOCK (0). Disconnect the negative cable from the battery, then wait at least 3 minutes.

4. Disconnect the driver's airbag 4P connector (A) from the cable reel.

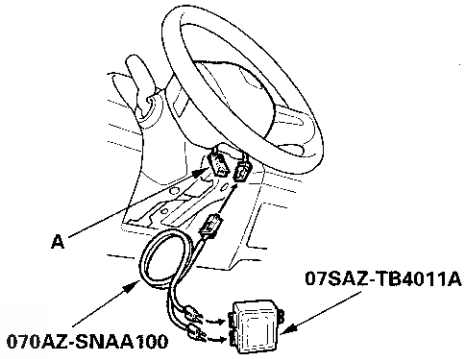

5. Connect the SRS inflator simulator (2 Ω connectors) and simulator lead J to the cable reel.

6. Reconnect the negative cable to the battery.

7. Clear the DTC memory.

8. Read the DTC (see page 24-22).

   Is DTC 11-3x or 11-6x indicated?

   YES—Go to step 9.

   NO—Short in the driver's airbag first or second inflator; replace the driver's airbag (see page 24-184), then clear the DTC. ■

9. Turn the ignition switch to LOCK (0). Disconnect the negative cable from the battery, then wait at least 3 minutes.

10. Remove the column cover (see page 17-10), then disconnect dashboard wire harness 4P connector (A) from the cable reel.

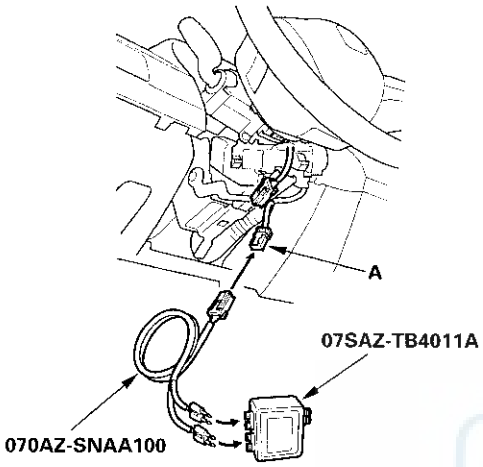

11. Connect the SRS inflator simulator (2 Ω connectors) and the simulator lead to the dashboard wire harness.

12. Reconnect the negative cable to the battery.

13. Clear the DTC memory.

14. Read the DTC.

Is DTC 11-3x or 11-6x indicated?

YES—Go to step 15.

NO—Short in the cable reel; replace the cable reel (see page 24-196), then clear the DTC.■

15. Turn the ignition switch to LOCK (0). Disconnect the negative cable from the battery, then wait at least 3 minutes.

16. Disconnect SRS unit connector A (28P) from the SRS unit (see step 9 on page 24-21).

17. Disconnect the SRS inflator simulator from the SRS simulator lead. Do not disconnect the simulator lead from the dashboard wire harness 4P connector.

18. Connect the SRS short cancellers (070AZ-SAA0100) to SRS unit connector A (28P) terminals No. 7 and No. 8, and to terminals No. 1 and No. 2 (see page 24-18).

19. Measure the resistance between the terminals of both SRS simulator leads. There should be an open circuit or at least 1 MΩ.

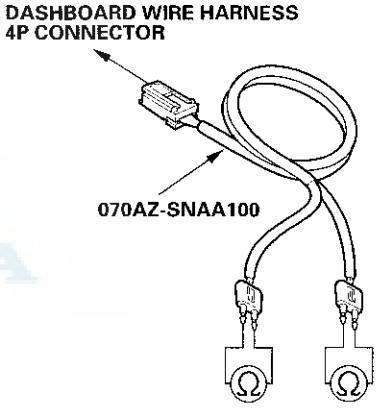

Is the resistance as specified?

YES—Faulty SRS unit or poor connection at SRS unit connector A (28P) and the SRS unit. Check the connection between the connector and the SRS unit. If the connection is OK, replace the SRS unit (see page 24-199).■

NO—Short in the dashboard wire harness; replace dashboard wire harness, then clear the DTC.■

DTC Troubleshooting (cont'd)

DTC 11-8x ("x" can be 0 thru 9 or A thru F): Short to Power in the Driver's Airbag First Inflator

DTC 11-Ax ("x" can be 0 thru 9 or A thru F): Short to Power in the Driver's Airbag Second Inflator

Special Tools Required
- SRS inflator simulator 07SAZ-TB4011A
- SRS simulator lead J 070AZ-SNAA100

NOTE: Before doing this troubleshooting procedure, review SRS Precautions and Procedures (see page 24-13), General Troubleshooting Information (see page 24-22), and Battery Terminal Disconnection and Reconnection (see page 22-62).

1. Clear the DTC memory (see page 24-23).

2. Turn the ignition switch to ON (II), and check that the SRS indicator comes on for about 6 seconds and then goes off.

   Does the SRS indicator stay on, and is DTC 11-8x or 11-Ax indicated?

   YES—Go to step 3.

   NO—Intermittent failure, system is OK at this time. Go to Troubleshooting Intermittent Failures (see page 24-24). If another DTC is indicated, troubleshoot the DTC. ■

3. Turn the ignition switch to LOCK (0). Disconnect the negative cable from the battery, then wait at least 3 minutes.

4. Disconnect the driver's airbag 4P connector (A) from the cable reel.

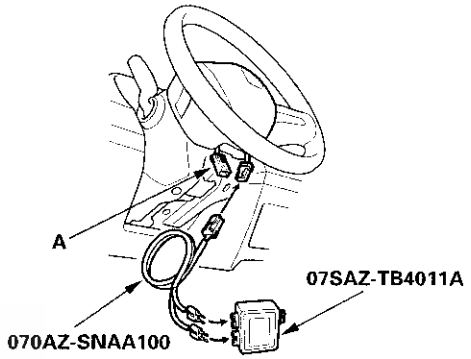

5. Connect the SRS inflator simulator (2 Ω connectors) and simulator lead J to the cable reel.

6. Reconnect the negative cable to the battery.

7. Clear the DTC memory.

8. Read the DTC (see page 24-22).

   Is DTC 11-8x or 11-Ax indicated?

   YES—Go to step 9.

   NO—Short to power in the driver's airbag first or second inflator; replace the driver's airbag (see page 24-184), then clear the DTC. ■

9. Turn the ignition switch to LOCK (0). Disconnect the negative cable from the battery, then wait at least 3 minutes.

10. Remove the column cover (see page 17-10), then disconnect the dashboard wire harness 4P connector (A) from the cable reel.

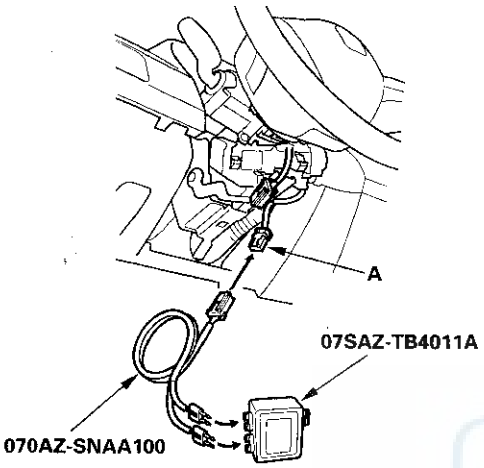

11. Connect the SRS inflator simulator (2 Ω connectors) and the simulator lead to the dashboard wire harness.

12. Reconnect the negative cable to the battery.

13. Clear the DTC memory.

14. Read the DTC.

Is DTC 11-8x or 11-Ax indicated?

YES—Go to step 15.

NO—Short to power in the cable reel; replace the cable reel (see page 24-196), then clear the DTC.■

15. Turn the ignition switch to LOCK (0). Disconnect the negative cable from the battery, then wait at least 3 minutes.

16. Disconnect SRS unit connector A (28P) from the SRS unit (see step 9 on page 24-21).

17. Disconnect the SRS inflator simulator from the SRS simulator lead. Do not disconnect the simulator lead from the dashboard wire harness 4P connector.

18. Reconnect the negative cable to the battery.

19. Turn the ignition switch to ON (II).

20. Measure the voltage between each terminal of the SRS simulator lead and body ground. There should be less than 0.2 V.

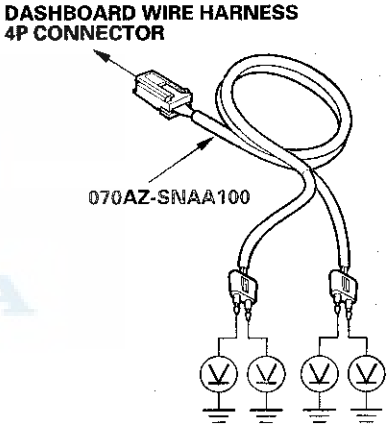

Is the voltage as specified?

YES—Faulty SRS unit or poor connection at SRS unit connector A (28P) and the SRS unit. Check the connection between the connector and the SRS unit. If the connection is OK, replace the SRS unit (see page 24-199).■

NO—Short to power in the dashboard wire harness; replace the dashboard wire harness, then clear the DTC.■

DTC Troubleshooting (cont'd)

DTC 11-9x ("x" can be 0 thru 9 or A thru F): Short to Ground in the Driver's Airbag First Inflator

DTC 11-Bx ("x" can be 0 thru 9 or A thru F): Short to Ground in the Driver's Airbag Second Inflator

Special Tools Required
- SRS inflator simulator 07SAZ-TB4011A
- SRS simulator lead J 070AZ-SNAA100

NOTE: Before doing this troubleshooting procedure, review SRS Precautions and Procedures (see page 24-13), General Troubleshooting Information (see page 24-22), and Battery Terminal Disconnection and Reconnection (see page 22-62).

1. Clear the DTC memory (see page 24-23).

2. Turn the ignition switch to ON (II), and check that the SRS indicator comes on for about 6 seconds and then goes off.

   Does the SRS indicator stay on, and is DTC 11-9x or 11-Bx indicated?

   YES—Go to step 3.

   NO—Intermittent failure, system is OK at this time. Go to Troubleshooting Intermittent Failures (see page 24-24). If another DTC is indicated, troubleshoot the DTC.■

3. Turn the ignition switch to LOCK (0). Disconnect the negative cable from the battery, then wait at least 3 minutes.

4. Disconnect the driver's airbag 4P connector (A) from the cable reel.

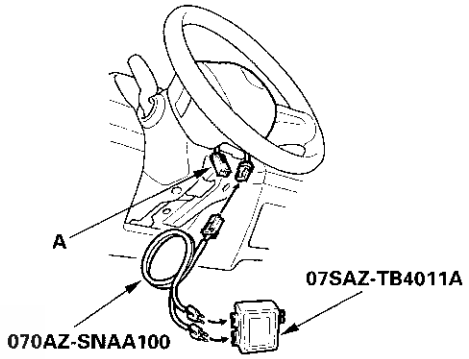

5. Connect the SRS inflator simulator (2 Ω connectors) and simulator lead J to the cable reel.

6. Reconnect the negative cable to the battery.

7. Clear the DTC memory.

8. Read the DTC (see page 24-22).

   Is DTC 11-9x or 11-Bx indicated?

   YES—Go to step 9.

   NO—Short to ground in the driver's airbag first or second inflator; replace the driver's airbag (see page 24-184), then clear the DTC.■

9. Turn the ignition switch to LOCK (0). Disconnect the negative cable from the battery, then wait at least 3 minutes.

10. Remove the column cover (see page 17-10), then disconnect the dashboard wire harness 4P connector (A) from the cable reel.

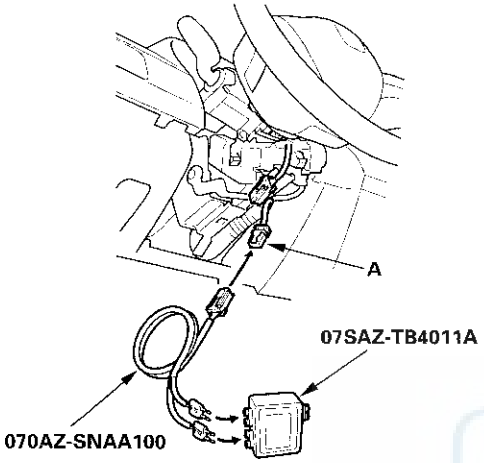

11. Connect the SRS inflator simulator (2 Ω connectors) and the simulator lead to the dashboard wire harness.

12. Reconnect the negative cable to the battery.

13. Clear the DTC memory.

14. Read the DTC.

    Is DTC 11-9x or 11-Bx indicated?

    YES—Go to step 15.

    NO—Short to ground in the cable reel; replace the cable reel (see page 24-196), then clear the DTC. ■

15. Turn the ignition switch to LOCK (0). Disconnect the negative cable from the battery, then wait at least 3 minutes.

16. Disconnect SRS unit connector A (28P) from the SRS unit (see step 9 on page 24-21).

17. Disconnect the SRS inflator simulator from the SRS simulator lead. Do not disconnect the simulator lead from the dashboard wire harness 4P connector.

18. Measure the resistance between each terminal of the SRS simulator lead and body ground. There should be an open circuit or at least 1 MΩ.

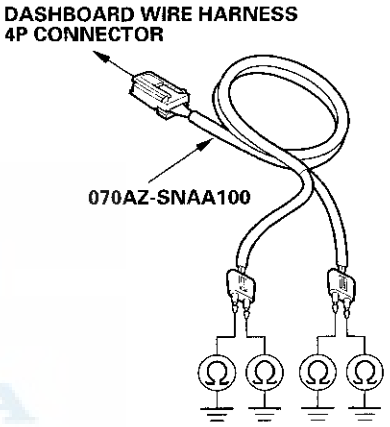

Is the resistance as specified?

YES—Faulty SRS unit or poor connection at SRS unit connector A (28P) and the SRS unit. Check the connection between the connector and the SRS unit. If the connection is OK, replace the SRS unit (see page 24-199). ■

NO—Short to ground in the dashboard wire harness; replace the dashboard wire harness, then clear the DTC. ■

DTC Troubleshooting (cont'd)

DTC 12-1x ("x" can be 0 thru 9 or A thru F): Open in the Front Passenger's Airbag First Inflator

DTC 12-4x ("x" can be 0 thru 9 or A thru F): Open in the Front Passenger's Airbag Second Inflator

Special Tools Required
- SRS inflator simulator 07SAZ-TB4011A
- SRS simulator lead J 070AZ-SNAA100

NOTE: Before doing this troubleshooting procedure, review SRS Precautions and Procedures (see page 24-13), General Troubleshooting Information (see page 24-22), and Battery Terminal Disconnection and Reconnection (see page 22-62).

1. Clear the DTC memory (see page 24-23).

2. Turn the ignition switch to ON (II), and check that the SRS indicator comes on for about 6 seconds and then goes off.

   Does the SRS indicator stay on, and is DTC 12-1x or 12-4x indicated?

   YES—Go to step 3.

   NO—Intermittent failure, system is OK at this time. Go to Troubleshooting Intermittent Failures (see page 24-24). If another DTC is indicated, troubleshoot the DTC.■

3. Turn the ignition switch to LOCK (0). Disconnect the negative cable from the battery, then wait at least 3 minutes.

4. Remove the glove box (see page 20-91), then disconnect the front passenger's airbag 4P connector (A) from dashboard wire harness.

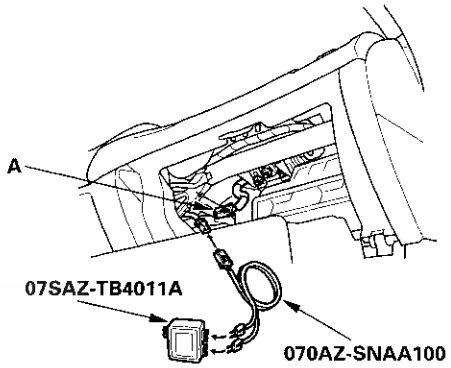

5. Connect the SRS inflator simulator (2 Ω connectors) and simulator lead J to the dashboard wire harness.

6. Reconnect the negative cable to the battery.

7. Clear the DTC memory.

8. Read the DTC (see page 24-22).

   Is DTC 12-1x or 12-4x indicated?

   YES—Go to step 9.

   NO—Open in the front passenger's airbag first or second inflator; replace the front passenger's airbag (see page 24-185), then clear the DTC.■

9. Turn the ignition switch to LOCK (0). Disconnect the negative cable from the battery, then wait at least 3 minutes.

10. Disconnect SRS unit connector A (28P) from the SRS unit (see step 9 on page 24-21).

11. Disconnect the SRS inflator simulator from the SRS simulator lead. Do not disconnect the simulator lead from the dashboard wire harness 4P connector.

12. Measure the resistance between the terminals of both SRS simulator leads. There should be less than 1.0 Ω.

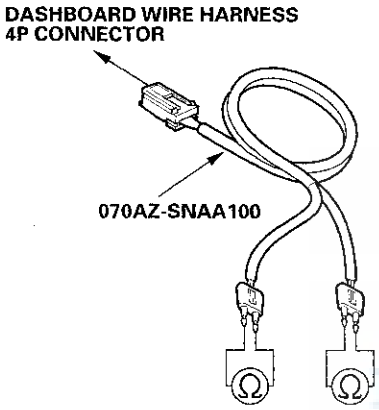

Is the resistance as specified?

YES—Faulty SRS unit or poor connection at SRS unit connector A (28P). Check the connection; if the connection is OK, replace the SRS unit (see page 24-199). ■

NO—Open in the dashboard wire harness; replace the dashboard wire harness, then clear the DTC. ■

DTC 12-3x ("x" can be 0 thru 9 or A thru F): Short to Another Wire or Decreased Resistance in the Front Passenger's Airbag First Inflator

DTC 12-6x ("x" can be 0 thru 9 or A thru F): Short to Another Wire or Decreased Resistance in the Front Passenger's Airbag Second Inflator

Special Tools Required
- SRS inflator simulator 07SAZ-TB4011A
- SRS simulator lead J 070AZ-SNAA100
- SRS short canceller 070AZ-SAA0100

NOTE: Before doing this troubleshooting procedure, review SRS Precautions and Procedures (see page 24-13), General Troubleshooting Information (see page 24-22), and Battery Terminal Disconnection and Reconnection (see page 22-62).

1. Clear the DTC memory (see page 24-23).

2. Turn the ignition switch to ON (II), and check that the SRS indicator comes on for about 6 seconds and then goes off.

   Does the SRS indicator stay on, and is DTC 12-3x or 12-6x indicated?

   YES—Go to step 3.

   NO—Intermittent failure, system is OK at this time. Go to Troubleshooting Intermittent Failures (see page 24-24). If another DTC is indicated, troubleshoot the DTC. ■

(cont'd)

DTC Troubleshooting (cont'd)

3. Turn the ignition switch to LOCK (0). Disconnect the negative cable from the battery, then wait at least 3 minutes.

4. Remove the glove box (see page 20-91), then disconnect the front passenger's airbag 4P connector (A) from the dashboard wire harness.

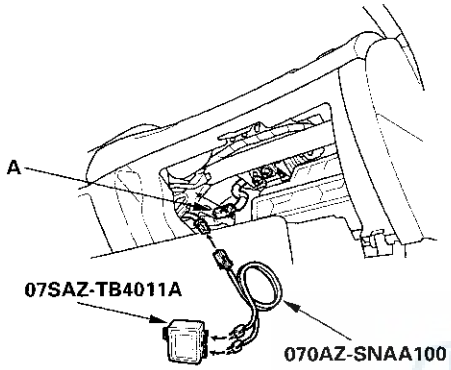

5. Connect the SRS inflator simulator (2 Ω connectors) and simulator lead J to dashboard wire harness.

6. Reconnect the negative cable to the battery.

7. Clear the DTC memory.

8. Read the DTC (see page 24-22).

   Is DTC 12-3x or 12-6x indicated?

   YES—Go to step 9.

   NO—Short in the front passenger's airbag first or second inflator; replace the front passenger's airbag (see page 24-185), then clear the DTC.■

9. Turn the ignition switch to LOCK (0). Disconnect the negative cable from the battery, then wait at least 3 minutes.

10. Disconnect SRS unit connector A (28P) from the SRS unit (see step 9 on page 24-21).

11. Disconnect the SRS inflator simulator from the SRS simulator lead. Do not disconnect the simulator lead from the dashboard wire harness 4P connector.

12. Connect the SRS short cancellers (070AZ-SAA0100) to SRS unit connector A (28P) terminals No. 9 and No. 10 and to terminals No. 3 and No. 4 (see page 24-18).

13. Measure the resistance between the terminals of both SRS simulator leads. There should be an open circuit or at least 1 MΩ.

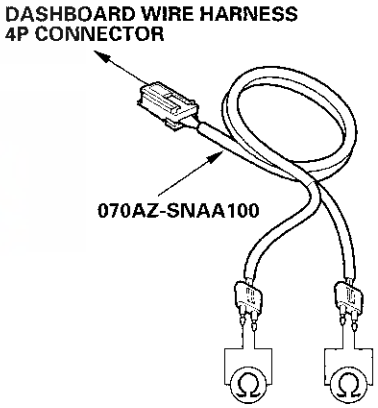

   Is the resistance as specified?

   YES—Faulty SRS unit or poor connection at SRS unit connector A (28P) and the SRS unit. Check the connection between the connector and the SRS unit. If the connection is OK, replace the SRS unit (see page 24-199).■

   NO—Short in the dashboard wire harness; replace the dashboard wire harness, then clear the DTC.■

DTC 12-8x ("x" can be 0 thru 9 or A thru F): Short to Power in the Front Passenger's Airbag First Inflator

DTC 12-Ax ("x" can be 0 thru 9 or A thru F): Short to Power in the Front Passenger's Airbag Second Inflator

Special Tools Required
- SRS inflator simulator 07SAZ-TB4011A
- SRS simulator lead J 070AZ-SNAA100

NOTE: Before doing this troubleshooting procedure, review SRS Precautions and Procedures (see page 24-13), General Troubleshooting Information (see page 24-22), and Battery Terminal Disconnection and Reconnection (see page 22-62).

1. Clear the DTC memory (see page 24-23).

2. Turn the ignition switch to ON (II), and check that the SRS indicator comes on for about 6 seconds and then goes off.

   Does the SRS indicator stay on, and is DTC 12-8x or 12-Ax indicated?

   YES—Go to step 3.

   NO—Intermittent failure, system is OK at this time. Go to Troubleshooting Intermittent Failures (see page 24-24). If another DTC is indicated, troubleshoot the DTC.■

3. Turn the ignition switch to LOCK (0). Disconnect the negative cable from the battery, then wait at least 3 minutes.

4. Remove the glove box (see page 20-91), then disconnect the front passenger's airbag 4P connector (A) from dashboard wire harness.

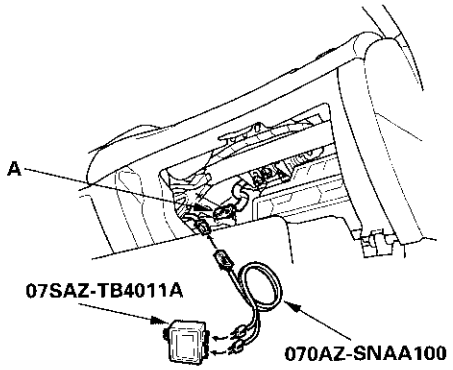

5. Connect the SRS inflator simulator (2 Ω connectors) and simulator lead J to the dashboard wire harness.

6. Reconnect the negative cable to the battery.

(cont'd)

DTC Troubleshooting (cont'd)

7. Clear the DTC memory.

8. Read the DTC (see page 24-22).

   Is DTC 12-8x or 12-Ax indicated?

   YES—Go to step 9.

   NO—Short to power in the front passenger's airbag first or second inflator; replace the front passenger's airbag (see page 24-185), then clear the DTC. ■

9. Turn the ignition switch to LOCK (0). Disconnect the negative cable from the battery, then wait at least 3 minutes.

10. Disconnect SRS unit connector A (28P) from the SRS unit (see step 9 on page 24-21).

11. Disconnect the SRS inflator simulator from the SRS simulator lead. Do not disconnect the simulator lead from the dashboard wire harness 4P connector.

12. Reconnect the negative cable to the battery.

13. Turn the ignition switch to ON (II).

14. Measure the voltage between each terminal of the SRS simulator lead and body ground. There should be less than 0.2 V.

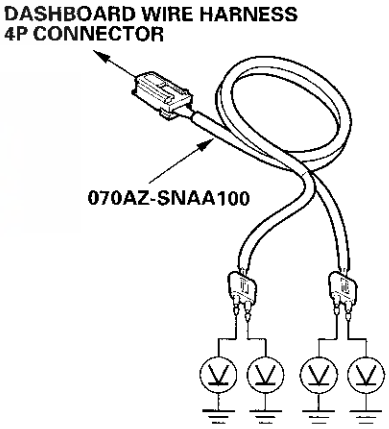

   Is the voltage as specified?

   YES—Faulty SRS unit or poor connection at SRS unit connector A (28P) and the SRS unit. Check the connection between the connector and the SRS unit. If the connection is OK, replace the SRS unit (see page 24-199). ■

   NO—Short to power in the dashboard wire harness; replace the dashboard wire harness, then clear the DTC. ■

DTC 12-9x ("x" can be 0 thru 9 or A thru F): Short to Ground in the Front Passenger's Airbag First Inflator

DTC 12-Bx ("x" can be 0 thru 9 or A thru F): Short to Ground in the Front Passenger's Airbag Second Inflator

Special Tools Required
- SRS inflator simulator 07SAZ-TB4011A
- SRS simulator lead J 070AZ-SNAA100

NOTE: Before doing this troubleshooting procedure, review SRS Precautions and Procedures (see page 24-13), General Troubleshooting Information (see page 24-22), and Battery Terminal Disconnection and Reconnection (see page 22-62).

1. Clear the DTC memory (see page 24-23).

2. Turn the ignition switch to ON (II), and check that the SRS indicator comes on for about 6 seconds and then goes off.

   Does the SRS indicator stay on, and is DTC 12-9x or 12-Bx indicated?

   YES—Go to step 3.

   NO—Intermittent failure, system is OK at this time. Go to Troubleshooting Intermittent Failures (see page 24-24). If another DTC is indicated, troubleshoot the DTC.■

3. Turn the ignition switch to LOCK (0). Disconnect the negative cable from the battery, then wait at least 3 minutes.

4. Remove the glove box (see page 20-91), then disconnect the front passenger's airbag 4P connector (A) from the dashboard wire harness.

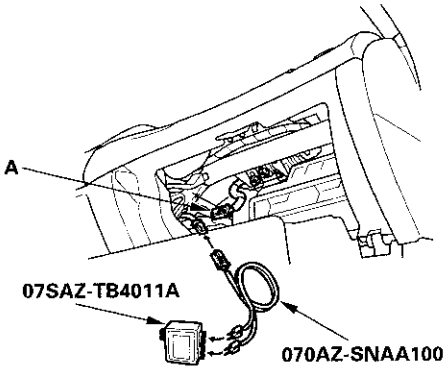

5. Connect the SRS inflator simulator (2 Ω connectors) and simulator lead J to the dashboard wire harness.

6. Reconnect the negative cable to the battery.

7. Clear the DTC memory.

8. Read the DTC (see page 24-22).

   Is DTC 12-9x or 12-Bx indicated?

   YES—Go to step 9.

   NO—Short to ground in the front passenger's airbag first or second inflator; replace the front passenger's airbag (see page 24-185), then clear the DTC.■

9. Turn the ignition switch to LOCK (0). Disconnect the negative cable from the battery, then wait at least 3 minutes.

10. Disconnect SRS unit connector A (28P) from the SRS unit (see step 9 on page 24-21).

11. Disconnect the SRS inflator simulator from the SRS simulator lead. Do not disconnect the simulator lead from the dashboard wire harness 4P connector.

(cont'd)

DTC Troubleshooting (cont'd)

12. Measure the resistance between each terminal of the SRS simulator lead and body ground. There should be an open circuit or at least 1 MΩ.

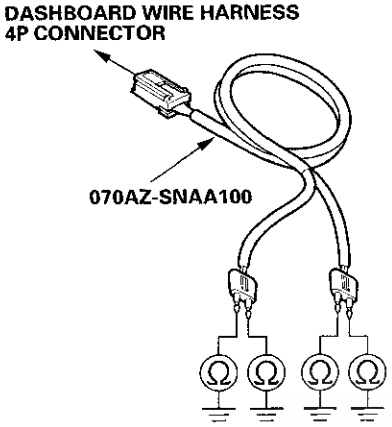

Is the resistance as specified?

YES—Faulty SRS unit or poor connection at SRS unit connector A (28P) and the SRS unit. Check the connection between the connector and the SRS unit. If the connection is OK, replace the SRS unit (see page 24-199).■

NO—Short to ground in the dashboard wire harness; replace the dashboard wire harness, then clear the DTC.■

DTC 21-1x ("x" can be 0 thru 9 or A thru F): Open in the Driver's Seat Belt Tensioner

Special Tools Required
- SRS inflator simulator 07SAZ-TB4011A
- SRS simulator lead K 070AZ-SNAA200

NOTE: Before doing this troubleshooting procedure, review SRS Precautions and Procedures (see page 24-13), General Troubleshooting Information (see page 24-22), and Battery Terminal Disconnection and Reconnection (see page 22-62).

1. Clear the DTC memory (see page 24-23).

2. Turn the ignition switch to ON (II), and check that the SRS indicator comes on for about 6 seconds and then goes off.

   Does the SRS indicator stay on, and is DTC 21-1x indicated?

   YES—Go to step 3.

   NO—Intermittent failure, system is OK at this time. Go to Troubleshooting Intermittent Failures (see page 24-24). If another DTC is indicated, troubleshoot the DTC.■

3. Turn the ignition switch to LOCK (0). Disconnect the negative cable from the battery, then wait at least 3 minutes.

4. Remove the B-pillar lower trim (see page 20-60), then disconnect the floor wire harness 4P connector (A) from the driver's seat belt tensioner.

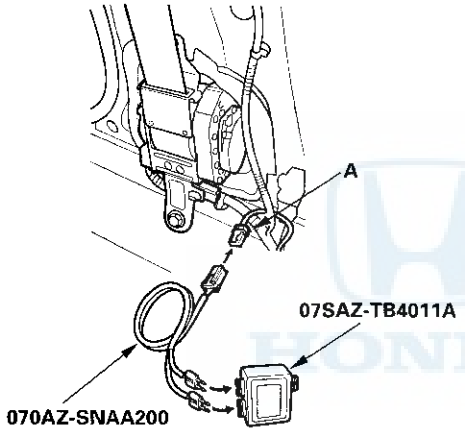

5. Connect the SRS inflator simulator (2 Ω connectors) and simulator lead K to the floor wire harness.

6. Reconnect the negative cable to the battery.

7. Clear the DTC memory.

8. Read the DTC (see page 24-22).

Is DTC 21-1x indicated?

YES—Go to step 9.

NO—Open in the driver's seat belt tensioner; replace the driver's seat belt (see page 24-4), then clear the DTC. ■

9. Turn the ignition switch to LOCK (0). Disconnect the negative cable from the battery, then wait at least 3 minutes.

10. Disconnect both seat belt buckle tensioner 4P connectors (see step 8 on page 24-21) and the front passenger's seat belt tensioner 4P connector (see step 7 on page 24-21).

11. Disconnect SRS unit connector B (28P) from the SRS unit (see step 9 on page 24-21).

12. Measure the resistance between SRS unit connector B (28P) terminals No. 1 and No. 2. There should be 2.0—3.0 Ω.

SRS UNIT CONNECTOR B (28P)

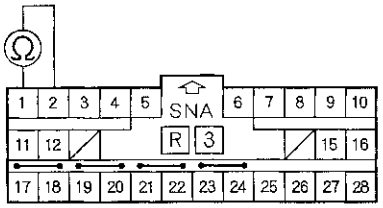

Wire side of female terminals

Is the resistance as specified?

YES—Faulty SRS unit or poor connection at SRS unit connector B (28P) and the SRS unit. Check the connection; if the connection is OK, replace the SRS unit (see page 24-199). ■

NO—Open in the floor wire harness; replace the floor wire harness, then clear the DTC. ■

DTC Troubleshooting (cont'd)

DTC 21-3x ("x" can be 0 thru 9 or A thru F): Short to Another Wire or Decreased Resistance in the Driver's Seat Belt Tensioner

Special Tools Required
- SRS inflator simulator 07SAZ-TB4011A
- SRS simulator lead K 070AZ-SNAA200

NOTE: Before doing this troubleshooting procedure, review SRS Precautions and Procedures (see page 24-13), General Troubleshooting Information (see page 24-22), and Battery Terminal Disconnection and Reconnection (see page 22-62).

1. Clear the DTC memory (see page 24-23).

2. Turn the ignition switch to ON (II), and check that the SRS indicator comes on for about 6 seconds and then goes off.

   Does the SRS indicator stay on, and is DTC 21-3x indicated?

   YES—Go to step 3.

   NO—Intermittent failure, system is OK at this time. Go to Troubleshooting Intermittent Failures (see page 24-24). If another DTC is indicated, troubleshoot the DTC.■

3. Turn the ignition switch to LOCK (0). Disconnect the negative cable from the battery, then wait at least 3 minutes.

4. Remove the B-pillar lower trim (see page 20-60), then disconnect the floor wire harness 4P connector (A) from the driver's seat belt tensioner.

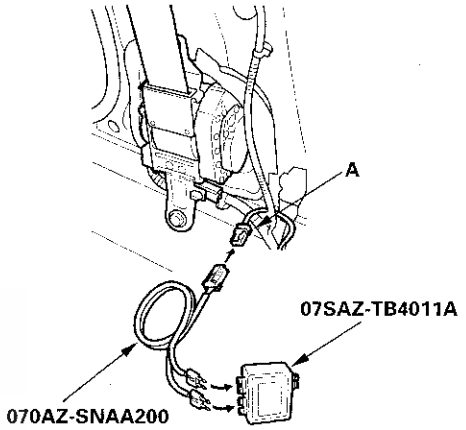

5. Connect the SRS inflator simulator (2 Ω connectors) and simulator lead K to the floor wire harness.

6. Reconnect the negative cable to the battery.

7. Clear the DTC memory.

8. Read the DTC (see page 24-22).

   Is DTC 21-3x indicated?

   YES—Go to step 9.

   NO—Short in the driver's seat belt tensioner; replace the driver's seat belt (see page 24-4), then clear the DTC.■

9. Turn the ignition switch to LOCK (0). Disconnect the negative cable from the battery, then wait at least 3 minutes.

10. Disconnect both seat belt buckle tensioner 4P connectors (see step 8 on page 24-21) and the front passenger's seat belt tensioner 4P connector (see step 7 on page 24-21).

11. Disconnect SRS unit connector B (28P) from the SRS unit (see step 9 on page 24-21).

12. Disconnect the simulator lead from the floor wire harness.

13. Measure the resistance between SRS unit connector B (28P) terminals No. 1 and No. 2. There should be an open circuit or at least 1 MΩ.

SRS UNIT CONNECTOR B (28P)

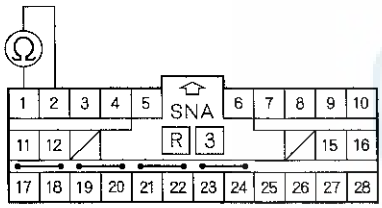

Wire side of female terminals

Is the resistance as specified?

YES—Faulty SRS unit or poor connection at SRS unit connector B (28P) and the SRS unit. Check the connection; if the connection is OK, replace the SRS unit (see page 24-199).■

NO—Short in the floor wire harness; replace the floor wire harness, then clear the DTC.■

DTC 21-8x ("x" can be 0 thru 9 or A thru F): Short to Power in the Driver's Seat Belt Tensioner

Special Tools Required
- SRS inflator simulator 07SAZ-TB4011A
- SRS simulator lead K 070AZ-SNAA200

NOTE: Before doing this troubleshooting procedure, review SRS Precautions and Procedures (see page 24-13), General Troubleshooting Information (see page 24-22), and Battery Terminal Disconnection and Reconnection (see page 22-62).

1. Clear the DTC memory (see page 24-23).

2. Turn the ignition switch to ON (II), and check that the SRS indicator comes on for about 6 seconds and then goes off.

   Does the SRS indicator stay on, and is DTC 21-8x indicated?

   YES—Go to step 3.

   NO—Intermittent failure, system is OK at this time. Go to Troubleshooting Intermittent Failures (see page 24-24). If another DTC is indicated, troubleshoot the DTC.■

(cont'd)

DTC Troubleshooting (cont'd)

3. Turn the ignition switch to LOCK (0). Disconnect the negative cable from the battery, then wait at least 3 minutes.

4. Remove the B-pillar lower trim (see page 20-60), then disconnect the floor wire harness 4P connector (A) from the driver's seat belt tensioner.

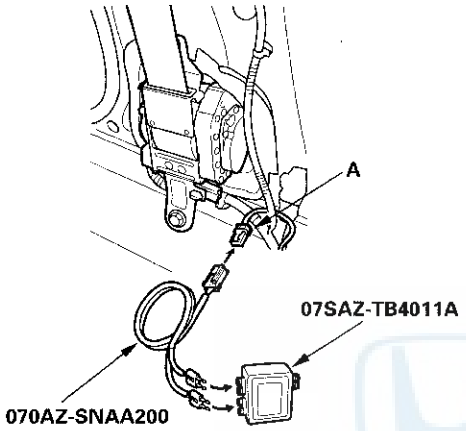

5. Connect the SRS inflator simulator (2 Ω connectors) and simulator lead K to the floor wire harness.

6. Reconnect the negative cable to the battery.

7. Clear the DTC memory.

8. Read the DTC (see page 24-22).

   Is DTC 21-8x indicated?

   YES—Go to step 9.

   NO—Short to power in the driver's seat belt tensioner; replace the driver's seat belt (see page 24-4), then clear the DTC.■

9. Turn the ignition switch to LOCK (0). Disconnect the negative cable from the battery, then wait at least 3 minutes.

10. Disconnect both seat belt buckle tensioner 4P connectors (see step 8 on page 24-21) and the front passenger's seat belt tensioner 4P connector (see step 7 on page 24-21).

11. Disconnect SRS unit connector B (28P) from the SRS unit (see step 9 on page 24-21).

12. Disconnect the simulator lead from the floor wire harness.

13. Reconnect the negative cable to the battery.

14. Turn the ignition switch to ON (II).

15. Measure the voltage between body ground and SRS unit connector B (28P) terminals No. 1 and No. 2, individually. There should be less than 0.2 V.

SRS UNIT CONNECTOR B (28P)

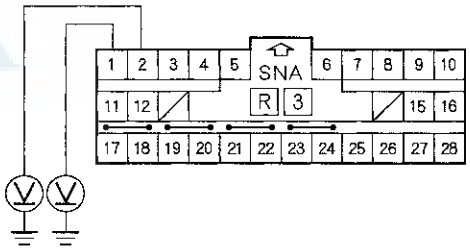

Wire side of female terminals

Is the voltage as specified?

YES—Faulty SRS unit or poor connection at SRS unit connector B (28P) and the SRS unit. Check the connection; if the connection is OK, replace the SRS unit (see page 24-199).■

NO—Short to power in the floor wire harness; replace the floor wire harness, then clear the DTC.■

DTC 21-9x ("x" can be 0 thru 9 or A thru F): Short to Ground in the Driver's Seat Belt Tensioner

Special Tools Required
- SRS inflator simulator 07SAZ-TB4011A
- SRS simulator lead K 070AZ-SNAA200

NOTE: Before doing this troubleshooting procedure, review SRS Precautions and Procedures (see page 24-13), General Troubleshooting Information (see page 24-22), and Battery Terminal Disconnection and Reconnection (see page 22-62).

1. Clear the DTC memory (see page 24-23).

2. Turn the ignition switch to ON (II), and check that the SRS indicator comes on for about 6 seconds and then goes off.

   Does the SRS indicator stay on, and is DTC 21-9x indicated?

   YES—Go to step 3.

   NO—Intermittent failure, system is OK at this time. Go to Troubleshooting Intermittent Failures (see page 24-24). If another DTC is indicated, troubleshoot the DTC. ■

3. Turn the ignition switch to LOCK (0). Disconnect the negative cable from the battery, then wait at least 3 minutes.

4. Remove the B-pillar lower trim (see page 20-60), then disconnect the floor wire harness 4P connector (A) from the driver's seat belt tensioner.

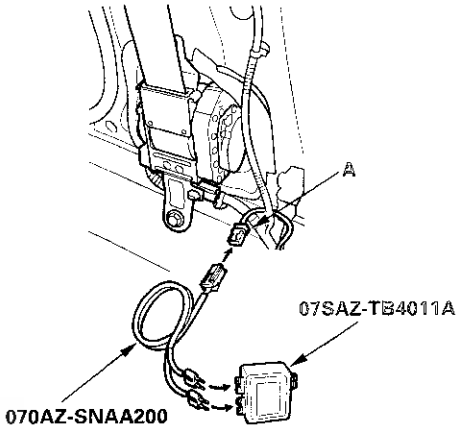

5. Connect the SRS inflator simulator (2 Ω connectors) and simulator lead K to the floor wire harness.

6. Reconnect the negative cable to the battery.

7. Clear the DTC memory.

8. Read the DTC (see page 24-22).

   Is DTC 21-9x indicated?

   YES—Go to step 9.

   NO—Short to ground in the driver's seat belt tensioner; replace the driver's seat belt (see page 24-4), then clear the DTC. ■

(cont'd)

DTC Troubleshooting (cont'd)

9. Turn the ignition switch to LOCK (0). Disconnect the negative cable from the battery, then wait at least 3 minutes.

10. Disconnect both seat belt buckle tensioner 4P connectors (see step 8 on page 24-21) and the front passenger's seat belt tensioner 4P connector (see step 7 on page 24-21).

11. Disconnect SRS unit connector B (28P) from the SRS unit (see step 9 on page 24-21).

12. Disconnect the simulator lead from the floor wire harness.

13. Measure the resistance between body ground and SRS unit connector B (28P) terminals No. 1 and No. 2, individually. There should be an open circuit or at least 1 MΩ.

SRS UNIT CONNECTOR B (28P)

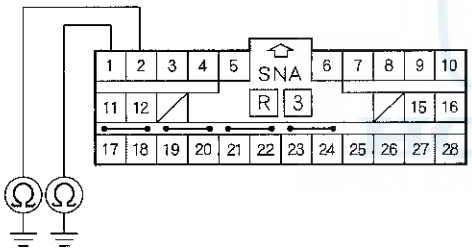

Wire side of female terminals

Is the resistance as specified?

YES—Faulty SRS unit or poor connection at SRS unit connector B (28P) and the SRS unit. Check the connection; if the connection is OK, replace the SRS unit (see page 24-199).■

NO—Short to ground in the floor wire harness; replace the floor wire harness, then clear the DTC.■

DTC 22-1x ("x" can be 0 thru 9 or A thru F): Open in the Front Passenger's Seat Belt Tensioner

Special Tools Required
- SRS inflator simulator 07SAZ-TB4011A
- SRS simulator lead K 070AZ-SNAA200

NOTE: Before doing this troubleshooting procedure, review SRS Precautions and Procedures (see page 24-13), General Troubleshooting Information (see page 24-22), and Battery Terminal Disconnection and Reconnection (see page 22-62).

1. Clear the DTC memory (see page 24-23).

2. Turn the ignition switch to ON (II), and check that the SRS indicator comes on for about 6 seconds and then goes off.

Does the SRS indicator stay on, and is DTC 22-1x indicated?

YES—Go to step 3.

NO—Intermittent failure, system is OK at this time. Go to Troubleshooting Intermittent Failures (see page 24-24). If another DTC is indicated, troubleshoot the DTC.■

3. Turn the ignition switch to LOCK (0). Disconnect the negative cable from the battery, then wait at least 3 minutes.

4. Remove the B-pillar lower trim (see page 20-60), then disconnect the floor wire harness 4P connector (A) from the front passenger's seat belt tensioner.

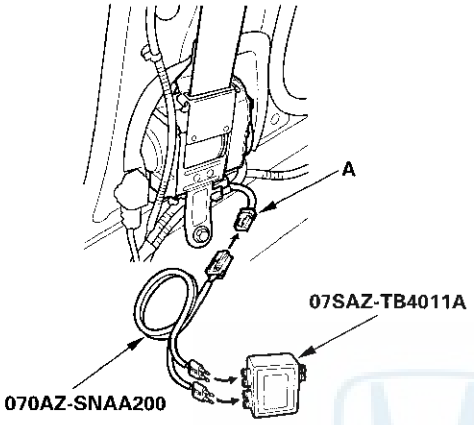

5. Connect the SRS inflator simulator (2 Ω connectors) and simulator lead K to the floor wire harness.

6. Reconnect the negative cable to the battery.

7. Clear the DTC memory.

8. Read the DTC (see page 24-22).

   Is DTC 22-1x indicated?

   YES—Go to step 9.

   NO—Open in the front passenger's seat belt tensioner; replace the front passenger's seat belt (see page 24-4), then clear the DTC.■

9. Turn the ignition switch to LOCK (0). Disconnect the negative cable from the battery, then wait at least 3 minutes.

10. Disconnect both seat belt buckle tensioner 4P connectors (see step 8 on page 24-21) and the driver's seat belt tensioner 4P connector (see step 7 on page 24-21).

11. Disconnect SRS unit connector B (28P) from the SRS unit (see step 9 on page 24-21).

12. Measure the resistance between SRS unit connector B (28P) terminals No. 3 and No. 4. There should be 2.0—3.0 Ω.

SRS UNIT CONNECTOR B (28P)

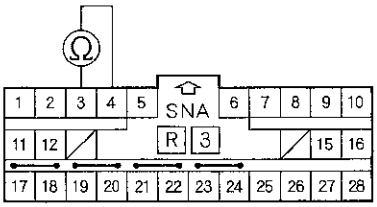

Wire side of female terminals

Is the resistance as specified?

YES—Faulty SRS unit or poor connection at SRS unit connector B (28P) and the SRS unit. Check the connection; if the connection is OK, replace the SRS unit (see page 24-199).■

NO—Open in the floor wire harness; replace the floor wire harness, then clear the DTC.■

DTC Troubleshooting (cont'd)

DTC 22-3x ("x" can be 0 thru 9 or A thru F): Short to Another Wire or Decreased Resistance in the Front Passenger's Seat Belt Tensioner

Special Tools Required
- SRS inflator simulator 07SAZ-TB4011A
- SRS simulator lead K 070AZ-SNAA200

NOTE: Before doing this troubleshooting procedure, review SRS Precautions and Procedures (see page 24-13), General Troubleshooting Information (see page 24-22), and Battery Terminal Disconnection and Reconnection (see page 22-62).

1. Clear the DTC memory (see page 24-23).

2. Turn the ignition switch to ON (II), and check that the SRS indicator comes on for about 6 seconds and then goes off.

   Does the SRS indicator stay on, and is DTC 22-3x indicated?

   YES—Go to step 3.

   NO—Intermittent failure, system is OK at this time. Go to Troubleshooting Intermittent Failures (see page 24-24). If another DTC is indicated, troubleshoot the DTC.■

3. Turn the ignition switch to LOCK (0). Disconnect the negative cable from the battery, then wait at least 3 minutes.

4. Remove the B-pillar lower trim (see page 20-60), then disconnect the floor wire harness 4P connector (A) from the front passenger's seat belt tensioner.

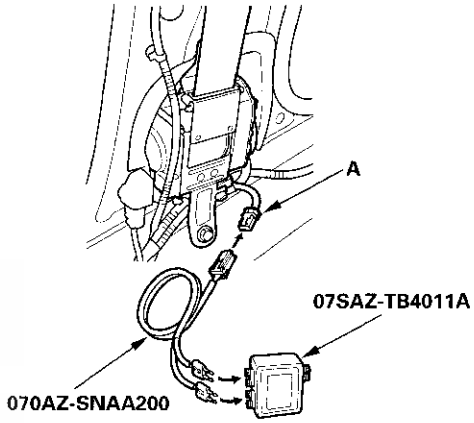

5. Connect the SRS inflator simulator (2 Ω connectors) and simulator lead K to the floor wire harness.

6. Reconnect the negative cable to the battery.

7. Clear the DTC memory.

8. Read the DTC (see page 24-22).

   Is DTC 22-3x indicated?

   YES—Go to step 9.

   NO—Short in the front passenger's seat belt tensioner; replace the front passenger's seat belt (see page 24-4), then clear the DTC.■

9. Turn the ignition switch to LOCK (0). Disconnect the negative cable from the battery, then wait at least 3 minutes.

10. Disconnect both seat belt buckle tensioner 4P connectors (see step 8 on page 24-21) and the driver's seat belt tensioner 4P connector (see step 7 on page 24-21).

11. Disconnect SRS unit connector B (28P) from the SRS unit (see step 9 on page 24-21).

12. Disconnect the simulator lead from the floor wire harness.

13. Measure the resistance between SRS unit connector B (28P) terminals No. 3 and No. 4. There should be an open circuit or at least 1 MΩ.

SRS UNIT CONNECTOR B (28P)

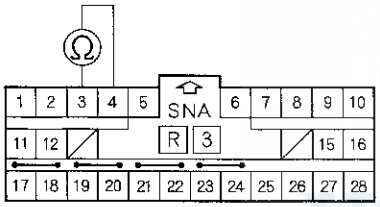

Wire side of female terminals

Is the resistance as specified?

YES—Faulty SRS unit or poor connection at SRS unit connector B (28P) and the SRS unit. Check the connection; if the connection is OK, replace the SRS unit (see page 24-199).■

NO—Short in the floor wire harness; replace the floor wire harness, then clear the DTC.■

DTC 22-8x ("x" can be 0 thru 9 or A thru F): Short to Power in the Front Passenger's Seat Belt Tensioner

Special Tools Required
- SRS inflator simulator 07SAZ-TB4011A
- SRS simulator lead K 070AZ-SNAA200

NOTE: Before doing this troubleshooting procedure, review SRS Precautions and Procedures (see page 24-13), General Troubleshooting Information (see page 24-22), and Battery Terminal Disconnection and Reconnection (see page 22-62).

1. Clear the DTC memory (see page 24-23).

2. Turn the ignition switch to ON (II), and check that the SRS indicator comes on for about 6 seconds and then goes off.

Does the SRS indicator stay on, and is DTC 22-8x indicated?

YES—Go to step 3.

NO—Intermittent failure, system is OK at this time. Go to Troubleshooting Intermittent Failures (see page 24-24). If another DTC is indicated, troubleshoot the DTC.■

(cont'd)

DTC Troubleshooting (cont'd)

3. Turn the ignition switch to LOCK (0). Disconnect the negative cable from the battery, then wait at least 3 minutes.

4. Remove the B-pillar lower trim (see page 20-60), then disconnect the floor wire harness 4P connector (A) from the front passenger's seat belt tensioner.

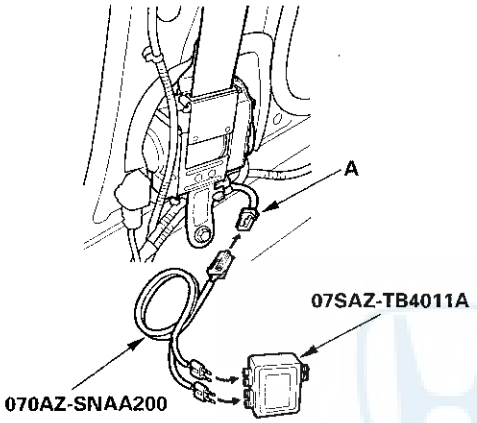

5. Connect the SRS inflator simulator (2 Ω connectors) and simulator lead K to the floor wire harness.

6. Reconnect the negative cable to the battery.

7. Clear the DTC memory.

8. Read the DTC (see page 24-22).

   Is DTC 22-8x indicated?

   YES—Go to step 9.

   NO—Short to power in the front passenger's seat belt tensioner; replace the front passenger's seat belt (see page 24-4), then clear the DTC.■

9. Turn the ignition switch to LOCK (0). Disconnect the negative cable from the battery, then wait at least 3 minutes.

10. Disconnect both seat belt buckle tensioner 4P connectors (see step 8 on page 24-21) and the driver's seat belt tensioner 4P connector (see step 7 on page 24-21).

11. Disconnect SRS unit connector B (28P) from the SRS unit (see step 9 on page 24-21).

12. Disconnect the simulator lead from the floor wire harness.

13. Reconnect the negative cable to the battery.

14. Turn the ignition switch to ON (II).

15. Measure the voltage between body ground and SRS unit connector B (28P) terminals No. 3 and No. 4, individually. There should be less than 0.2 V.

SRS UNIT CONNECTOR B (28P)

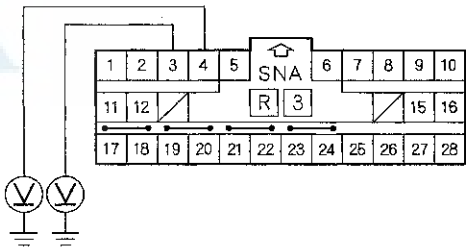

Wire side of female terminals

   Is the voltage as specified?

   YES—Faulty SRS unit or poor connection at SRS unit connector B (28P) and the SRS unit. Check the connection; if the connection is OK, replace the SRS unit (see page 24-199).■

   NO—Short to power in the floor wire harness; replace the floor wire harness, then clear the DTC.■

DTC 22-9x ("x" can be 0 thru 9 or A thru F): Short to Ground in the Front Passenger's Seat Belt Tensioner

Special Tools Required
- SRS inflator simulator 07SAZ-TB4011A
- SRS simulator lead K 070AZ-SNAA200

NOTE: Before doing this troubleshooting procedure, review SRS Precautions and Procedures (see page 24-13), General Troubleshooting Information (see page 24-22), and Battery Terminal Disconnection and Reconnection (see page 22-62).

1. Clear the DTC memory (see page 24-23).

2. Turn the ignition switch to ON (II), and check that the SRS indicator comes on for about 6 seconds and then goes off.

   Does the SRS indicator stay on, and is DTC 22-9x indicated?

   YES—Go to step 3.

   NO—Intermittent failure, system is OK at this time. Go to Troubleshooting Intermittent Failures (see page 24-24). If another DTC is indicated, troubleshoot the DTC.■

3. Turn the ignition switch to LOCK (0). Disconnect the negative cable from the battery, then wait at least 3 minutes.

4. Remove the B-pillar lower trim (see page 20-60), then disconnect the floor wire harness 4P connector (A) from the front passenger's seat belt tensioner.

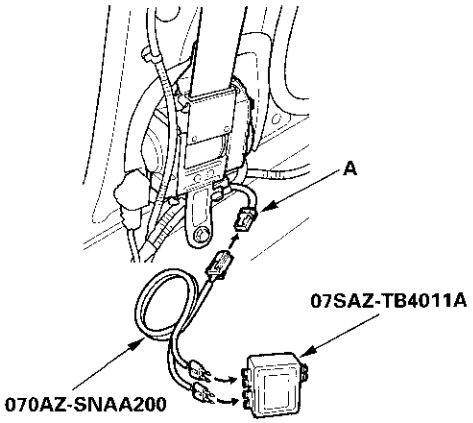

5. Connect the SRS inflator simulator (2 Ω connectors) and simulator lead K to the floor wire harness.

6. Reconnect the negative cable to the battery.

7. Clear the DTC memory.

8. Read the DTC (see page 24-22).

   Is DTC 22-9x indicated?

   YES—Go to step 9.

   NO—Short to ground in the front passenger's seat belt tensioner; replace the front passenger's seat belt (see page 24-4), then clear the DTC.■

(cont'd)

DTC Troubleshooting (cont'd)

9. Turn the ignition switch to LOCK (0). Disconnect the negative cable from the battery, then wait at least 3 minutes.

10. Disconnect both seat belt buckle tensioner 4P connectors (see step 8 on page 24-21) and the driver's seat belt tensioner 4P connector (see step 7 on page 24-21).

11. Disconnect SRS unit connector B (28P) from the SRS unit (see step 9 on page 24-21).

12. Disconnect the simulator lead from the floor wire harness.

13. Measure the resistance between body ground and SRS unit connector B (28P) terminals No. 3 and No. 4, individually. There should be an open circuit or at least 1 MΩ.

SRS UNIT CONNECTOR B (28P)

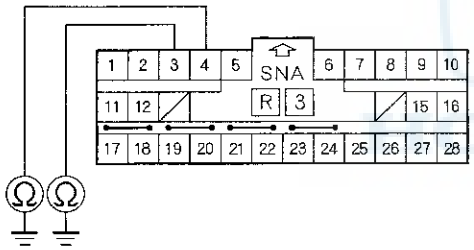

Wire side of female terminals

Is the resistance as specified?

YES—Faulty SRS unit or poor connection at SRS unit connector B (28P) and the SRS unit. Check the connection; if the connection is OK, replace the SRS unit (see page 24-199).■

NO—Short to ground in the floor wire harness; replace the floor wire harness, then clear the DTC.■

DTC 27-1x ("x" can be 0 thru 9 or A thru F): Open in the Driver's Seat Belt Buckle Tensioner

Special Tools Required
- SRS inflator simulator 07SAZ-TB4011A
- SRS simulator lead K 070AZ-SNAA200

NOTE: Before doing this troubleshooting procedure, review SRS Precautions and Procedures (see page 24-13), General Troubleshooting Information (see page 24-22), and Battery Terminal Disconnection and Reconnection (see page 22-62).

1. Clear the DTC memory (see page 24-23).

2. Turn the ignition switch to ON (II), and check that the SRS indicator comes on for about 6 seconds and then goes off.

   Does the SRS indicator stay on, and is DTC 27-1x indicated?

   YES—Go to step 3.

   NO—Intermittent failure, system is OK at this time. Go to Troubleshooting Intermittent Failures (see page 24-24). If another DTC is indicated, troubleshoot the DTC.■

3. Turn the ignition switch to LOCK (0). Disconnect the negative cable from the battery, then wait at least 3 minutes.

4. Disconnect the floor wire harness connector 4P connector (A) from the driver's seat belt buckle tensioner (B).

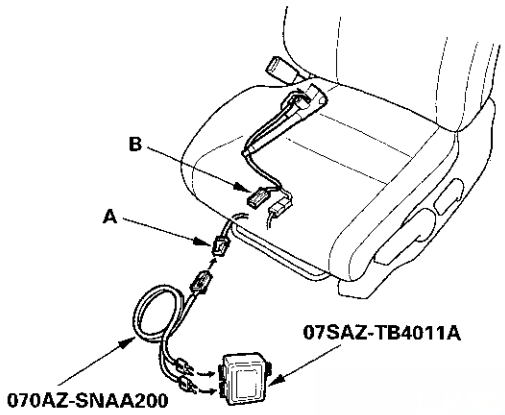

5. Connect the SRS inflator simulator (2 Ω connectors) and simulator lead K to the floor wire harness connector.

6. Reconnect the negative cable to the battery.

7. Clear the DTC memory.

8. Read the DTC (see page 24-22).

Is DTC 27-1x indicated?

YES—Go to step 9.

NO—Open in the driver's seat belt buckle tensioner; replace the driver's seat belt buckle (see page 24-6), then clear the DTC.■

9. Turn the ignition switch to LOCK (0). Disconnect the negative cable from the battery, then wait at least 3 minutes.

10. Disconnect both seat belt tensioner 4P connectors (see step 7 on page 24-21) and the front passenger's seat belt buckle tensioner 4P connector (see step 8 on page 24-21).

11. Disconnect SRS unit connector B (28P) from the SRS unit (see step 9 on page 24-21).

12. Measure the resistance between SRS unit connector B (28P) terminals No. 7 and No. 8. There should be 2.0—3.0 Ω.

SRS UNIT CONNECTOR B (28P)

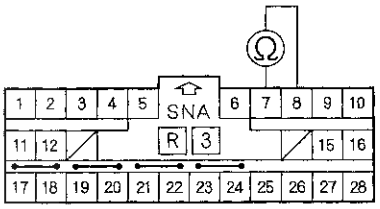

Wire side of female terminals

Is the resistance as specified?

YES—Faulty SRS unit or poor connection at SRS unit connector B (28P) and the SRS unit. Check the connection; if the connection is OK, replace the SRS unit (see page 24-199).■

NO—Open in the floor wire harness; replace the floor wire harness, then clear the DTC.■

DTC Troubleshooting (cont'd)

DTC 27-3x ("x" can be 0 thru 9 or A thru F): Short to Another Wire or Decreased Resistance in the Driver's Seat Belt Buckle Tensioner

Special Tools Required
- SRS inflator simulator 07SAZ-TB4011A
- SRS simulator lead K 070AZ-SNAA200

NOTE: Before doing this troubleshooting procedure, review SRS Precautions and Procedures (see page 24-13), General Troubleshooting Information (see page 24-22), and Battery Terminal Disconnection and Reconnection (see page 22-62).

1. Clear the DTC memory (see page 24-23).

2. Turn the ignition switch to ON (II), and check that the SRS indicator comes on for about 6 seconds and then goes off.

   Does the SRS indicator stay on, and is DTC 27-3x indicated?

   YES—Go to step 3.

   NO—Intermittent failure, system is OK at this time. Go to Troubleshooting Intermittent Failures (see page 24-24). If another DTC is indicated, troubleshoot the DTC.■

3. Turn the ignition switch to LOCK (0). Disconnect the negative cable from the battery, then wait at least 3 minutes.

4. Disconnect the floor wire harness 4P connector (A) from the driver's seat belt buckle tensioner connector (B).

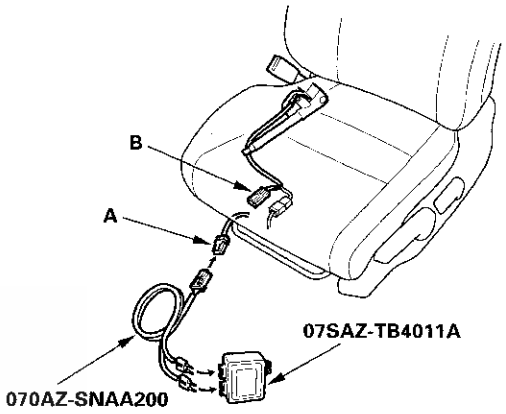

5. Connect the SRS inflator simulator (2 Ω connectors) and simulator lead K to the floor wire harness connector.

6. Reconnect the negative cable to the battery.

7. Clear the DTC memory.

8. Read the DTC (see page 24-22).

   Is DTC 27-3x indicated?

   YES—Go to step 9.

   NO—Short in the driver's seat belt buckle tensioner; replace the driver's seat belt buckle (see page 24-6), then clear the DTC.■

9. Turn the ignition switch to LOCK (0). Disconnect the negative cable from the battery, then wait at least 3 minutes.

10. Disconnect both seat belt tensioner 4P connectors (see step 7 on page 24-21) and the front passenger's seat belt buckle tensioner 4P connector (see step 8 on page 24-21).

11. Disconnect SRS unit connector B (28P) from the SRS unit (see step 9 on page 24-21).

12. Disconnect the simulator lead from the floor wire harness.

13. Measure the resistance between SRS unit connector B (28P) terminals No. 7 and No. 8. There should be an open circuit or at least 1 MΩ.

SRS UNIT CONNECTOR B (28P)

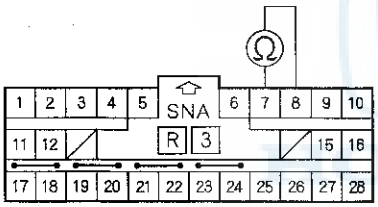

Wire side of female terminals

Is the resistance as specified?

YES—Faulty SRS unit or poor connection at SRS unit connector B (28P) and the SRS unit. Check the connection; if the connection is OK, replace the SRS unit (see page 24-199). ■

NO—Short in the floor wire harness; replace the floor wire harness, then clear the DTC. ■

DTC 27-8x ("x" can be 0 thru 9 or A thru F): Short to Power in the Driver's Seat Belt Buckle Tensioner

Special Tools Required
- SRS inflator simulator 07SAZ-TB4011A
- SRS simulator lead K 070AZ-SNAA200

NOTE: Before doing this troubleshooting procedure, review SRS Precautions and Procedures (see page 24-13), General Troubleshooting Information (see page 24-22), and Battery Terminal Disconnection and Reconnection (see page 22-62).

1. Clear the DTC memory (see page 24-23).

2. Turn the ignition switch to ON (II), and check that the SRS indicator comes on for about 6 seconds and then goes off.

Does the SRS indicator stay on, and is DTC 27-8x indicated?

YES—Go to step 3.

NO—Intermittent failure, system is OK at this time. Go to Troubleshooting Intermittent Failures (see page 24-24). If another DTC is indicated, troubleshoot the DTC. ■

(cont'd)

DTC Troubleshooting (cont'd)

3. Turn the ignition switch to LOCK (0). Disconnect the negative cable from the battery, then wait at least 3 minutes.

4. Disconnect the floor wire harness 4P connector (A) from the driver's seat belt buckle tensioner connector (B).

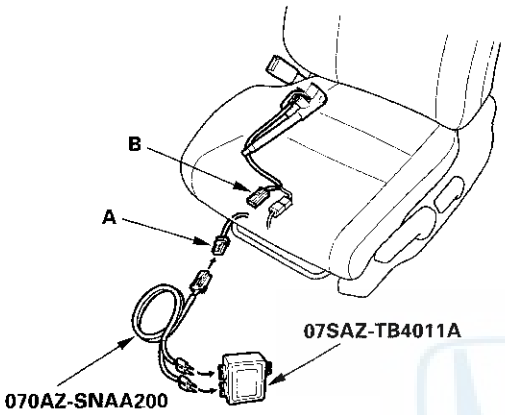

5. Connect the SRS inflator simulator (2 Ω connectors) and simulator lead K to the floor wire harness connector.

6. Reconnect the negative cable to the battery.

7. Clear the DTC memory.

8. Read the DTC (see page 24-22).

   Is DTC 27-8x indicated?

   YES—Go to step 9.

   NO—Short to power in the driver's seat belt buckle tensioner; replace the driver's seat belt buckle (see page 24-6), then clear the DTC.■

9. Turn the ignition switch to LOCK (0). Disconnect the negative cable from the battery, then wait at least 3 minutes.

10. Disconnect both seat belt tensioner 4P connectors (see step 7 on page 24-21) and the front passenger's seat belt buckle tensioner 4P connector (see step 8 on page 24-21).

11. Disconnect SRS unit connector B (28P) from the SRS unit (see step 9 on page 24-21).

12. Disconnect the simulator lead from the floor wire harness.

13. Reconnect the negative cable to the battery.

14. Turn the ignition switch to ON (II).

15. Measure the voltage between body ground and SRS unit connector B (28P) terminals No. 7 and No. 8, individually. There should be less than 0.2 V.

SRS UNIT CONNECTOR B (28P)

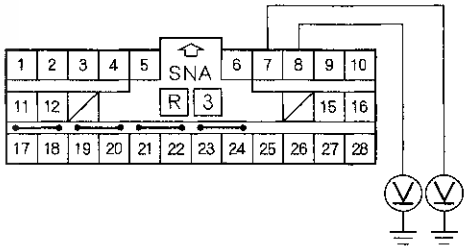

Wire side of female terminals

Is the voltage as specified?

YES—Faulty SRS unit or poor connection at SRS unit connector B (28P) and the SRS unit. Check the connection; if the connection is OK, replace the SRS unit (see page 24-199).■

NO—Short to power in the floor wire harness; replace the floor wire harness, then clear the DTC.■

DTC 27-9x ("x" can be 0 thru 9 or A thru F): Short to Ground in the Driver's Seat Belt Buckle Tensioner

Special Tools Required
- SRS inflator simulator 07SAZ-TB4011A
- SRS simulator lead K 070AZ-SNAA200

NOTE: Before doing this troubleshooting procedure, review SRS Precautions and Procedures (see page 24-13), General Troubleshooting Information (see page 24-22), and Battery Terminal Disconnection and Reconnection (see page 22-62).

1. Clear the DTC memory (see page 24-23).

2. Turn the ignition switch to ON (II), and check that the SRS indicator comes on for about 6 seconds and then goes off.

   Does the SRS indicator stay on, and is DTC 27-9x indicated?

   YES—Go to step 3.

   NO—Intermittent failure, system is OK at this time. Go to Troubleshooting Intermittent Failures (see page 24-24). If another DTC is indicated, troubleshoot the DTC.■

3. Turn the ignition switch to LOCK (0). Disconnect the negative cable from the battery, then wait at least 3 minutes.

4. Disconnect the floor wire harness 4P connector (A) from the driver's seat belt buckle tensioner connector (B).

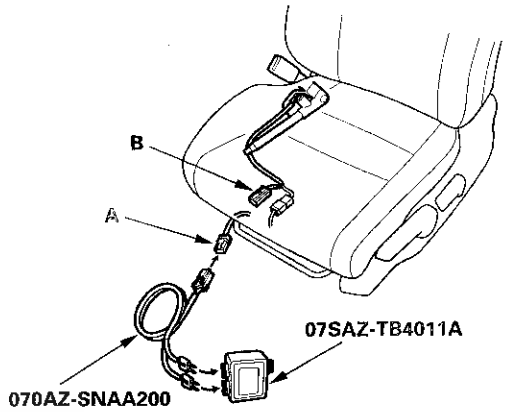

5. Connect the SRS inflator simulator (2 Ω connectors) and simulator lead K to the floor wire harness connector.

6. Reconnect the negative cable to the battery.

7. Clear the DTC memory.

8. Read the DTC (see page 24-22).

   Is DTC 27-9x indicated?

   YES—Go to step 9.

   NO—Short to ground in the driver's seat belt buckle tensioner; replace the driver's seat belt buckle (see page 24-6), then clear the DTC.■

(cont'd)

DTC Troubleshooting (cont'd)

9. Turn the ignition switch to LOCK (0). Disconnect the negative cable from the battery, then wait at least 3 minutes.

10. Disconnect both seat belt tensioner 4P connectors (see step 7 on page 24-21) and the front passenger's seat belt buckle tensioner 4P connector (see step 8 on page 24-21).

11. Disconnect SRS unit connector B (28P) from the SRS unit (see step 9 on page 24-21).

12. Disconnect the simulator lead from the floor wire harness.

13. Measure the resistance between body ground and SRS unit connector B (28P) terminals No. 7 and No. 8, individually. There should be an open circuit or at least 1 MΩ.

SRS UNIT CONNECTOR B (28P)

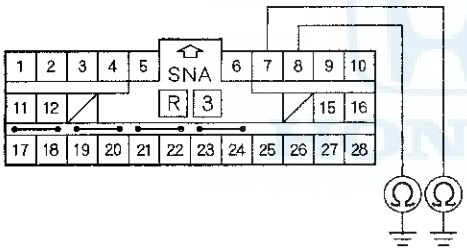

Wire side of female terminals

Is the resistance as specified?

YES—Faulty SRS unit or poor connection at SRS unit connector B (28P) and the SRS unit. Check the connection; if the connection is OK, replace the SRS unit (see page 24-199).■

NO—Short to ground in the floor wire harness; replace the floor wire harness, then clear the DTC.■

DTC 28-1x ("x" can be 0 thru 9 or A thru F): Open in the Front Passenger's Seat Belt Buckle Tensioner

Special Tools Required
- SRS inflator simulator 07SAZ-TB4011A
- SRS simulator lead K 070AZ-SNAA200

NOTE: Before doing this troubleshooting procedure, review SRS Precautions and Procedures (see page 24-13), General Troubleshooting Information (see page 24-22), and Battery Terminal Disconnection and Reconnection (see page 22-62).

1. Clear the DTC memory (see page 24-23).

2. Turn the ignition switch to ON (II), and check that the SRS indicator comes on for about 6 seconds and then goes off.

   Does the SRS indicator stay on, and is DTC 28-1x indicated?

   YES—Go to step 3.

   NO—Intermittent failure, system is OK at this time. Go to Troubleshooting Intermittent Failures (see page 24-24). If another DTC is indicated, troubleshoot the DTC.■

3. Turn the ignition switch to LOCK (0). Disconnect the negative cable from the battery, then wait at least 3 minutes.

4. Disconnect the floor wire harness 4P connector (A) from the front passenger's seat belt buckle tensioner connector (B).

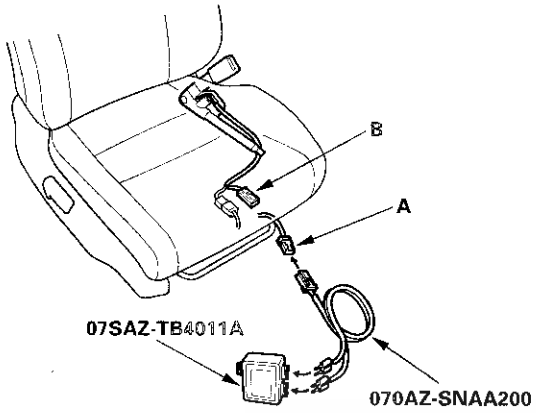

5. Connect the SRS inflator simulator (2 Ω connectors) and simulator lead K to the floor wire harness connector.

6. Reconnect the negative cable to the battery.

7. Clear the DTC memory.

8. Read the DTC (see page 24-22).

   Is DTC 28-1x indicated?

   YES—Go to step 9.

   NO—Open in the front passenger's seat belt buckle tensioner; replace the front passenger's seat belt buckle (see page 24-6), then clear the DTC.■

9. Turn the ignition switch to LOCK (0). Disconnect the negative cable from the battery, then wait at least 3 minutes.

10. Disconnect both seat belt tensioner 4P connectors (see step 7 on page 24-21) and the driver's seat belt buckle tensioner 4P connector (see step 8 on page 24-21).

11. Disconnect SRS unit connector B (28P) from the SRS unit (see step 9 on page 24-21).

12. Measure the resistance between SRS unit connector B (28P) terminals No. 9 and No. 10. There should be 2.0—3.0 Ω.

SRS UNIT CONNECTOR B (28P)

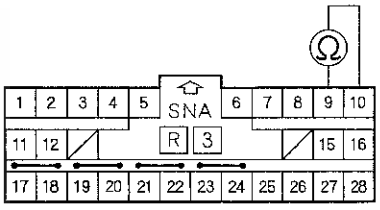

Wire side of female terminals

Is the resistance as specified?

YES—Faulty SRS unit or poor connection at SRS unit connector B (28P) and the SRS unit. Check the connection; if the connection is OK, replace the SRS unit (see page 24-199).■

NO—Open in the floor wire harness; replace the floor wire harness, then clear the DTC.■

DTC Troubleshooting (cont'd)

DTC 28-3x ("x" can be 0 thru 9 or A thru F): Short to Another Wire or Decreased Resistance in the Front Passenger's Seat Belt Buckle Tensioner

Special Tools Required
- SRS inflator simulator 07SAZ-TB4011A
- SRS simulator lead K 070AZ-SNAA200

NOTE: Before doing this troubleshooting procedure, review SRS Precautions and Procedures (see page 24-13), General Troubleshooting Information (see page 24-22), and Battery Terminal Disconnection and Reconnection (see page 22-62).

1. Clear the DTC memory (see page 24-23).

2. Turn the ignition switch to ON (II), and check that the SRS indicator comes on for about 6 seconds and then goes off.

   Does the SRS indicator stay on, and is DTC 28-3x indicted?

   YES—Go to step 3.

   NO—Intermittent failure, system is OK at this time. Go to Troubleshooting Intermittent Failures (see page 24-24). If another DTC is indicated, troubleshoot the DTC. ■

3. Turn the ignition switch to LOCK (0). Disconnect the negative cable from the battery, then wait at least 3 minutes.

4. Disconnect the floor wire harness 4P connector (A) from the front passenger's seat belt buckle tensioner connector (B).

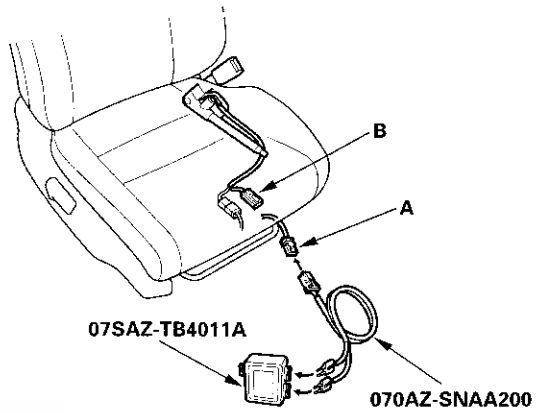

5. Connect the SRS inflator simulator (2 Ω connectors) and simulator lead K to floor wire harness connector.

6. Reconnect the negative cable to the battery.

7. Clear the DTC memory.

8. Read the DTC (see page 24-22).

   Is DTC 28-3x indicated?

   YES—Go to step 9.

   NO—Short in the front passenger's seat belt buckle tensioner; replace the front passenger's seat belt buckle (see page 24-6), then clear the DTC. ■

9. Turn the ignition switch to LOCK (0). Disconnect the negative cable from the battery, then wait at least 3 minutes.

10. Disconnect both seat belt tensioner 4P connectors (see step 7 on page 24-21) and the driver's seat belt buckle tensioner 4P connector (see step 8 on page 24-21).

11. Disconnect SRS unit connector B (28P) from the SRS unit (see step 9 on page 24-21).

12. Disconnect the simulator lead from the floor wire harness.

13. Measure the resistance between SRS unit connector B (28P) terminals No. 9 and No. 10. There should be an open circuit or at least 1 MΩ.

SRS UNIT CONNECTOR B (28P)

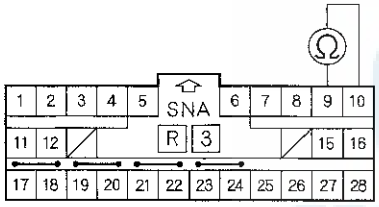

Wire side of female terminals

Is the resistance as specified?

YES—Faulty SRS unit or poor connection at SRS unit connector B (28P) and the SRS unit. Check the connection; if the connection is OK, replace the SRS unit (see page 24-199).■

NO—Short in the floor wire harness; replace the floor wire harness, then clear the DTC.■

DTC 28-8x ("x" can be 0 thru 9 or A thru F): Short to Power in the Front Passenger's Seat Belt Buckle Tensioner

Special Tools Required
- SRS inflator simulator 07SAZ-TB4011A
- SRS simulator lead K 070AZ-SNAA200

NOTE: Before doing this troubleshooting procedure, review SRS Precautions and Procedures (see page 24-13), General Troubleshooting Information (see page 24-22), and Battery Terminal Disconnection and Reconnection (see page 22-62).

1. Clear the DTC memory (see page 24-23).

2. Turn the ignition switch to ON (II), and check that the SRS indicator comes on for about 6 seconds and then goes off.

   Does the SRS indicator stay on, and is DTC 28-8x indicated?

   YES—Go to step 3.

   NO—Intermittent failure, system is OK at this time. Go to Troubleshooting Intermittent Failures (see page 24-24). If another DTC is indicated, troubleshoot the DTC.■

(cont'd)

DTC Troubleshooting (cont'd)

3. Turn the ignition switch to LOCK (0). Disconnect the negative cable from the battery, then wait at least 3 minutes.

4. Disconnect the floor wire harness 4P connector (A) from the front passenger's seat belt buckle tensioner connector (B).

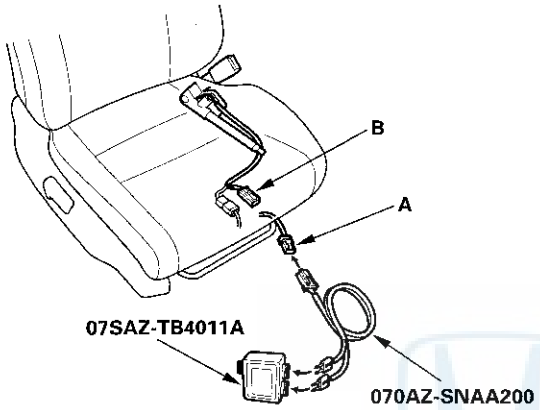

5. Connect the SRS inflator simulator (2 Ω connectors) and simulator lead K to floor wire harness connector.

6. Reconnect the negative cable to the battery.

7. Clear the DTC memory.

8. Read the DTC (see page 24-22).

   Is DTC 28-8x indicated?

   YES—Go to step 9.

   NO—Short to power in the front passenger's seat belt buckle tensioner; replace the front passenger's seat belt buckle (see page 24-6), then clear the DTC.■

9. Turn the ignition switch to LOCK (0). Disconnect the negative cable from the battery, then wait at least 3 minutes.

10. Disconnect both seat belt tensioner 4P connectors (see step 7 on page 24-21) and the driver's seat belt buckle tensioner 4P connector (see step 8 on page 24-21).

11. Disconnect SRS unit connector B (28P) from the SRS unit (see step 9 on page 24-21).

12. Disconnect the simulator lead from the floor wire harness.

13. Reconnect the negative cable to the battery.

14. Turn the ignition switch to ON (II).

15. Measure the voltage between body ground and SRS unit connector B (28P) terminals No. 9 and No. 10, individually. There should be less than 0.2 V.

SRS UNIT CONNECTOR B (28P)

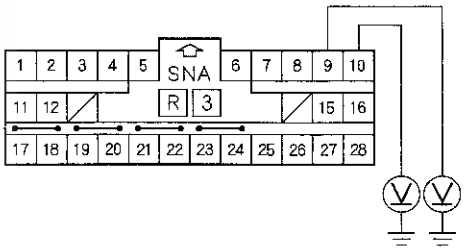

Wire side of female terminals

Is the voltage as specified?

YES—Faulty SRS unit or poor connection at SRS unit connector B (28P) and the SRS unit. Check the connection; if the connection is OK, replace the SRS unit (see page 24-199).■

NO—Short to power in the floor wire harness; replace the floor wire harness, then clear the DTC.■

DTC 28-9x ("x" can be 0 thru 9 or A thru F): Short to Ground in the Front Passenger's Seat Belt Buckle Tensioner

Special Tools Required
- SRS inflator simulator 07SAZ-TB4011A
- SRS simulator lead K 070AZ-SNAA200

NOTE: Before doing this troubleshooting procedure, review SRS Precautions and Procedures (see page 24-13), General Troubleshooting Information (see page 24-22), and Battery Terminal Disconnection and Reconnection (see page 22-62).

1. Clear the DTC memory (see page 24-23).

2. Turn the ignition switch to ON (II), and check that the SRS indicator comes on for about 6 seconds and then goes off.

   Does the SRS indicator stay on, and is DTC 28-9x indicated?

   YES—Go to step 3.

   NO—Intermittent failure, system is OK at this time. Go to Troubleshooting Intermittent Failures (see page 24-24). If another DTC is indicated, troubleshoot the DTC.■

3. Turn the ignition switch to LOCK (0). Disconnect the negative cable from the battery, then wait at least 3 minutes.

4. Disconnect the floor wire harness 4P connector (A) from the front passenger's seat belt buckle tensioner connector (B).

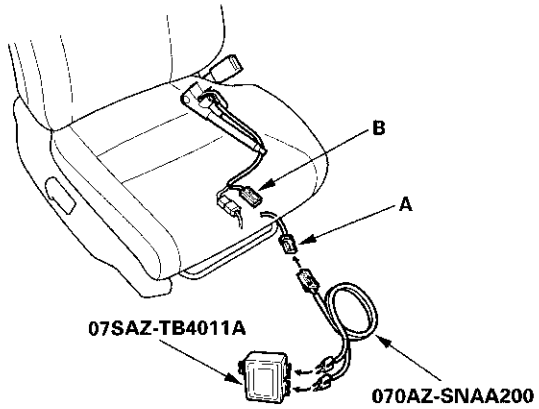

5. Connect the SRS inflator simulator (2 Ω connectors) and simulator lead K to floor wire harness connector.

6. Reconnect the negative cable to the battery.

7. Clear the DTC memory.

8. Read the DTC (see page 24-22).

   Is DTC 28-9x indicated?

   YES—Go to step 9.

   NO—Short to ground in the front passenger's seat belt buckle tensioner; replace the front passenger's seat belt buckle (see page 24-6), then clear the DTC.■

(cont'd)

DTC Troubleshooting (cont'd)

9. Turn the ignition switch to LOCK (0). Disconnect the negative cable from the battery, then wait at least 3 minutes.

10. Disconnect both seat belt tensioner 4P connectors (see step 7 on page 24-21) and the driver's seat belt buckle tensioner 4P connector (see step 8 on page 24-21).

11. Disconnect SRS unit connector B (28P) from the SRS unit (see step 9 on page 24-21).

12. Disconnect the simulator lead from the floor wire harness.

13. Measure the resistance between body ground and SRS unit connector B (28P) terminals No. 9 and No. 10, individually. There should be an open circuit or at least 1 MΩ.

SRS UNIT CONNECTOR B (28P)

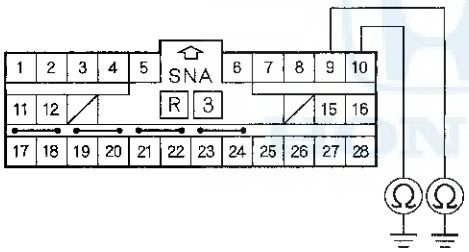

Wire side of female terminals

Is the resistance as specified?

YES—Faulty SRS unit or poor connection at SRS unit connector B (28P) and the SRS unit. Check the connection; if the connection is OK, replace the SRS unit (see page 24-199).■

NO—Short to ground in the floor wire harness; replace the floor wire harness, then clear the DTC.■

DTC 31-1x ("x" can be 0 thru 9 or A thru F): Open in the Driver's Side Airbag Inflator

Special Tools Required
- SRS inflator simulator 07SAZ-TB4011A
- SRS simulator lead L 070AZ-SNAA300

NOTE: Before doing this troubleshooting procedure, review SRS Precautions and Procedures (see page 24-13), General Troubleshooting Information (see page 24-22), and Battery Terminal Disconnection and Reconnection (see page 22-62).

1. Clear the DTC memory (see page 24-23).

2. Turn the ignition switch to ON (II), and check that the SRS indicator comes on for about 6 seconds and then goes off.

   Does the SRS indicator stay on, and is DTC 31-1x indicated?

   YES—Go to step 3.

   NO—Intermittent failure, system is OK at this time. Go to Troubleshooting Intermittent Failures (see page 24-24). If another DTC is indicated, troubleshoot the DTC.■

3. Turn the ignition switch to LOCK (0). Disconnect the negative cable from the battery, then wait at least 3 minutes.

4. Disconnect the floor wire harness 2P connector (A) from the driver's side airbag (B).

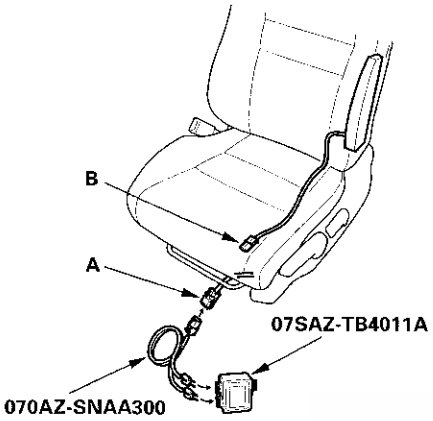

5. Connect the SRS inflator simulator (2 Ω connectors) and simulator lead L to the floor wire harness.

6. Reconnect the negative cable to the battery.

7. Clear the DTC memory.

8. Read the DTC (see page 24-22).

   Is DTC 31-1x indicated?

   YES—Go to step 9.

   NO—Open in the driver's side airbag inflator; replace the driver's side airbag (see page 24-187), then clear the DTC.■

9. Turn the ignition switch to LOCK (0). Disconnect the negative cable from the battery, then wait at least 3 minutes.

10. Disconnect both seat belt tensioner 4P connectors (see step 7 on page 24-21) and both seat belt buckle tensioner 4P connectors (see step 8 on page 24-21).

11. Disconnect SRS unit connector B (28P) from the SRS unit (see step 9 on page 24-21).

12. Disconnect the SRS inflator simulator from SRS simulator lead. Do not disconnect the simulator lead from the floor wire harness 2P connector.

13. Measure the resistance between the terminals of the black SRS simulator lead (A). There should be less than 1.0 Ω.

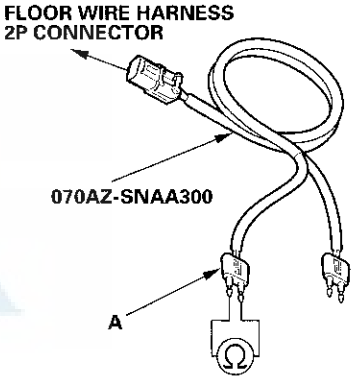

   Is the resistance as specified?

   YES—Faulty SRS unit or poor connection at SRS unit connector B (28P) and the SRS unit. Check the connection; if the connection is OK, replace the SRS unit (see page 24-199).■

   NO—Open in the floor wire harness; replace the floor wire harness, then clear the DTC.■

DTC Troubleshooting (cont'd)

DTC 31-3x ("x" can be 0 thru 9 or A thru F): Short to Another Wire or Decreased Resistance in the Driver's Side Airbag Inflator

Special Tools Required
- SRS inflator simulator 07SAZ-TB4011A
- SRS simulator lead L 070AZ-SNAA300
- SRS short canceller 070AZ-SAA0100

NOTE: Before doing this troubleshooting procedure, review SRS Precautions and Procedures (see page 24-13), General Troubleshooting Information (see page 24-22), and Battery Terminal Disconnection and Reconnection (see page 22-62).

1. Clear the DTC memory (see page 24-23).

2. Turn the ignition switch to ON (II), and check that the SRS indicator comes on for about 6 seconds and then goes off.

   Does the SRS indicator stay on, and is DTC 31-3x indicated?

   YES—Go to step 3.

   NO—Intermittent failure, system is OK at this time. Go to Troubleshooting Intermittent Failures (see page 24-24). If another DTC is indicated, troubleshoot the DTC. ■

3. Turn the ignition switch to LOCK (0). Disconnect the negative cable from the battery, then wait at least 3 minutes.

4. Disconnect the floor wire harness 2P connector (A) from the driver's side airbag (B).

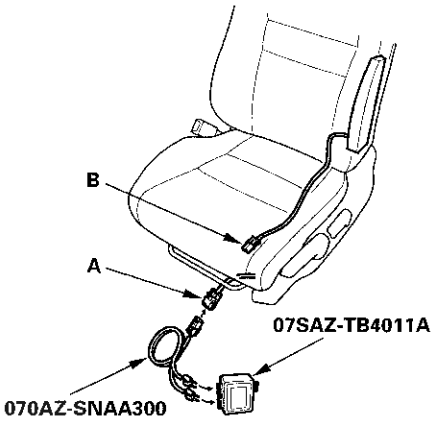

5. Connect the SRS inflator simulator (2 Ω connectors) and simulator lead L to the floor wire harness.

6. Reconnect the negative cable to the battery.

7. Clear the DTC memory.

8. Read the DTC (see page 24-22).

   Is DTC 31-3x indicated?

   YES—Go to step 9.

   NO—Short to another wire in the driver's side airbag inflator; replace the driver's side airbag (see page 24-187), then clear the DTC. ■

9. Turn the ignition switch to LOCK (0). Disconnect the negative cable from the battery, then wait at least 3 minutes.

10. Disconnect both seat belt tensioner 4P connectors (see step 7 on page 24-21) and both seat belt buckle tensioner 4P connectors (see step 8 on page 24-21).

11. Disconnect SRS unit connector B (28P) from the SRS unit (see step 9 on page 24-21).

12. Disconnect the SRS inflator simulator from the SRS simulator lead. Do not disconnect the simulator lead from the floor wire harness 2P connector.

13. Connect the SRS short cancellers (070AZ-SAA0100) to SRS unit connector B (28P) terminals No. 17 and No. 18 (see page 24-18).

14. Measure the resistance between the terminals of the black SRS simulator lead (A). There should be an open circuit or at least 1 MΩ.

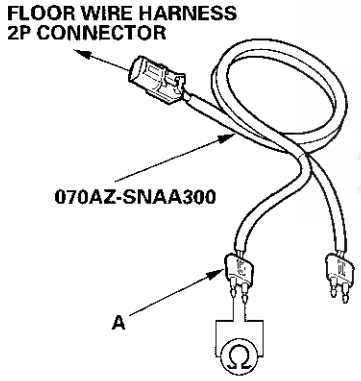

Is the resistance as specified?

YES—Faulty SRS unit or poor connection at SRS unit connector B (28P) and the SRS unit. Check the connection; if the connection is OK, replace the SRS unit (see page 24-199).■

NO—Short in the floor wire harness; replace the floor wire harness, then clear the DTC.■

DTC 31-8x ("x" can be 0 thru 9 or A thru F): Short to Power in the Driver's Side Airbag Inflator

Special Tools Required
- SRS inflator simulator 07SAZ-TB4011A
- SRS simulator lead L 070AZ-SNAA300

NOTE: Before doing this troubleshooting procedure, review SRS Precautions and Procedures (see page 24-13), General Troubleshooting Information (see page 24-22), and Battery Terminal Disconnection and Reconnection (see page 22-62).

1. Clear the DTC memory (see page 24-23).

2. Turn the ignition switch to ON (II), and check that the SRS indicator comes on for about 6 seconds and then goes off.

   Does the SRS indicator stay on, and is DTC 31-8x indicated?

   YES—Go to step 3.

   NO—Intermittent failure, system is OK at this time. Go to Troubleshooting Intermittent Failures (see page 24-24). If another DTC is indicated, troubleshoot the DTC.■

(cont'd)

DTC Troubleshooting (cont'd)

3. Turn the ignition switch to LOCK (0). Disconnect the negative cable from the battery, then wait at least 3 minutes.

4. Disconnect the floor wire harness 2P connector (A) from the driver's side airbag (B).

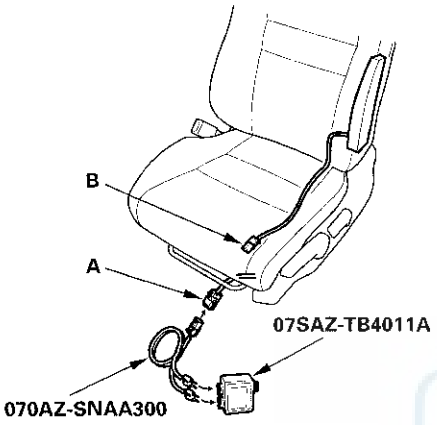

5. Connect the SRS inflator simulator (2 Ω connectors) and simulator lead L to the floor wire harness.

6. Reconnect the negative cable to the battery.

7. Clear the DTC memory.

8. Read the DTC (see page 24-22).

   Is DTC 31-8x indicated?

   YES—Go to step 9.

   NO—Short to power in the driver's side airbag inflator; replace the driver's side airbag (see page 24-187), then clear the DTC.■

9. Turn the ignition switch to LOCK (0). Disconnect the negative cable from the battery, then wait at least 3 minutes.

10. Disconnect both seat belt tensioner 4P connectors (see step 7 on page 24-21) and both seat belt buckle tensioner 4P connectors (see step 8 on page 24-21).

11. Disconnect SRS unit connector B (28P) from the SRS unit (see step 9 on page 24-21).

12. Disconnect the SRS inflator simulator from the SRS simulator lead. Do not disconnect the simulator lead from the floor wire harness 2P connector.

13. Reconnect the negative cable to the battery.

14. Turn the ignition switch to ON (II).

15. Measure the voltage between each terminal of the black SRS simulator lead (A) and body ground. There should be less than 0.2 V.

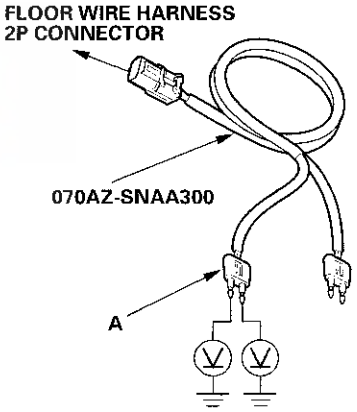

Is the voltage as specified?

YES—Faulty SRS unit or poor connection at SRS unit connector B (28P) and the SRS unit. Check the connection; if the connection is OK, replace the SRS unit (see page 24-199).■

NO—Short to power in the floor wire harness; replace the floor wire harness, then clear the DTC.■

DTC 31-9x ("x" can be 0 thru 9 or A thru F): Short to Ground in the Driver's Side Airbag Inflator

Special Tools Required
- SRS inflator simulator 07SAZ-TB4011A
- SRS simulator lead L 070AZ-SNAA300

NOTE: Before doing this troubleshooting procedure, review SRS Precautions and Procedures (see page 24-13), General Troubleshooting Information (see page 24-22), and Battery Terminal Disconnection and Reconnection (see page 22-62).

1. Clear the DTC memory (see page 24-23).

2. Turn the ignition switch to ON (II), and check that the SRS indicator comes on for about 6 seconds and then goes off.

   Does the SRS indicator stay on, and is DTC 31-9x indicated?

   YES—Go to step 3.

   NO—Intermittent failure, system is OK at this time. Go to Troubleshooting Intermittent Failures (see page 24-24). If another DTC is indicated, troubleshoot the DTC.■

3. Turn the ignition switch to LOCK (0). Disconnect the negative cable from the battery, then wait at least 3 minutes.

4. Disconnect the floor wire harness 2P connector (A) from the driver's side airbag (B).

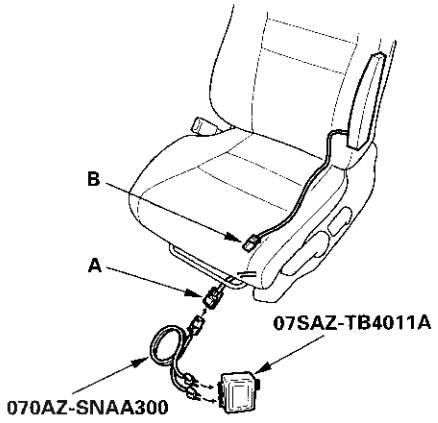

5. Connect the SRS inflator simulator (2 Ω connectors) and simulator lead L to the floor wire harness.

6. Reconnect the negative cable to the battery.

7. Clear the DTC memory.

8. Read the DTC (see page 24-22).

   Is DTC 31-9x indicated?

   YES—Go to step 9.

   NO—Short to ground in the driver's side airbag inflator; replace the driver's side airbag (see page 24-187), then clear the DTC.■

(cont'd)

DTC Troubleshooting (cont'd)

9. Turn the ignition switch to LOCK (0). Disconnect the negative cable from the battery, then wait at least 3 minutes.

10. Disconnect both seat belt tensioner 4P connectors (see step 7 on page 24-21) and both seat belt buckle tensioner 4P connectors (see step 8 on page 24-21).

11. Disconnect SRS unit connector B (28P) from the SRS unit (see step 9 on page 24-21).

12. Disconnect the SRS inflator simulator from the SRS simulator lead. Do not disconnect the simulator lead from the floor wire harness 2P connector.

13. Measure the resistance between each terminal of the black SRS simulator lead (A) and body ground. There should be an open circuit or at least 1 MΩ.

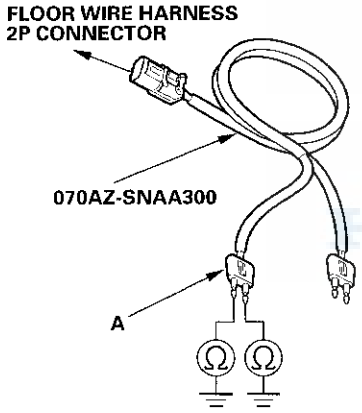

Is the resistance as specified?

YES—Faulty SRS unit or poor connection at SRS unit connector B (28P) and the SRS unit. Check the connection; if the connection is OK, replace the SRS unit (see page 24-199).■

NO—Short to ground in the floor wire harness; replace the floor wire harness, then clear the DTC.■

DTC 32-1x ("x" can be 0 thru 9 or A thru F): Open in the Front Passenger's Side Airbag Inflator

Special Tools Required
- SRS inflator simulator 07SAZ-TB4011A
- SRS simulator lead L 070AZ-SNAA300

NOTE: Before doing this troubleshooting procedure, review SRS Precautions and Procedures (see page 24-13), General Troubleshooting Information (see page 24-22), and Battery Terminal Disconnection and Reconnection (see page 22-62).

1. Clear the DTC memory (see page 24-23).

2. Turn the ignition switch to ON (II), and check that the SRS indicator comes on for about 6 seconds and then goes off.

   Does the SRS indicator stay on, and is DTC 32-1x indicated?

   YES—Go to step 3.

   NO—Intermittent failure, system is OK at this time. Go to Troubleshooting Intermittent Failures (see page 24-24). If another DTC is indicated, troubleshoot the DTC.■

3. Turn the ignition switch to LOCK (0). Disconnect the negative cable from the battery, then wait at least 3 minutes.

4. Disconnect the floor wire harness 2P connector (A) from the front passenger's side airbag (B).

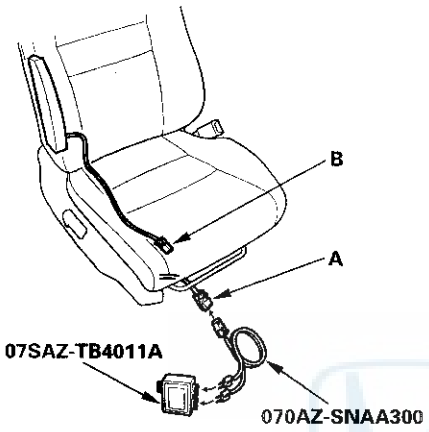

5. Connect the SRS inflator simulator (2 Ω connectors) and simulator lead L to the floor wire harness.

6. Reconnect the negative cable to the battery.

7. Clear the DTC memory.

8. Read the DTC (see page 24-22).

Is DTC 32-1x indicated?

YES—Go to step 9.

NO—Open in the front passenger's side airbag inflator; replace the front passenger's side airbag (see page 24-187), then clear the DTC.■

9. Turn the ignition switch to LOCK (0). Disconnect the negative cable from the battery, then wait at least 3 minutes.

10. Disconnect both seat belt tensioner 4P connectors (see step 7 on page 24-21) and both seat belt buckle tensioner 4P connectors (see step 8 on page 24-21).

11. Disconnect SRS unit connector B (28P) from the SRS unit (see step 9 on page 24-21).

12. Disconnect the SRS inflator simulator from the SRS simulator lead. Do not disconnect the simulator lead from the floor wire harness 2P connector.

13. Measure the resistance between the terminals of the black SRS simulator lead (A). There should be less than 1.0 Ω.

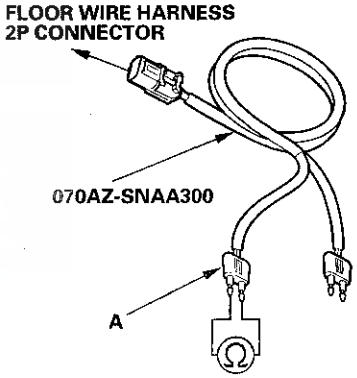

Is the resistance as specified?

YES—Faulty SRS unit or poor connection at SRS unit connector B (28P) and the SRS unit. Check the connection; if the connection is OK, replace the SRS unit (see page 24-199).■

NO—Open in the floor wire harness; replace the floor wire harness, then clear the DTC.■

DTC Troubleshooting (cont'd)

DTC 32-3x ("x" can be 0 thru 9 or A thru F): Short to Another Wire or Decreased Resistance in the Front Passenger's Side Airbag Inflator

Special Tools Required
- SRS inflator simulator 07SAZ-TB4011A
- SRS simulator lead L 070AZ-SNAA300
- SRS short canceller 070AZ-SAA0100

NOTE: Before doing this troubleshooting procedure, review SRS Precautions and Procedures (see page 24-13), General Troubleshooting Information (see page 24-22), and Battery Terminal Disconnection and Reconnection (see page 22-62).

1. Clear the DTC memory (see page 24-23).

2. Turn the ignition switch to ON (II), and check that the SRS indicator comes on for about 6 seconds and then goes off.

   Does the SRS indicator stay on, and is DTC 32-3x indicated?

   YES—Go to step 3.

   NO—Intermittent failure, system is OK at this time. Go to Troubleshooting Intermittent Failures (see page 24-24). If another DTC is indicated, troubleshoot the DTC.■

3. Turn the ignition switch to LOCK (0). Disconnect the negative cable from the battery, then wait at least 3 minutes.

4. Disconnect the floor wire harness 2P connector (A) from the front passenger's side airbag (B).

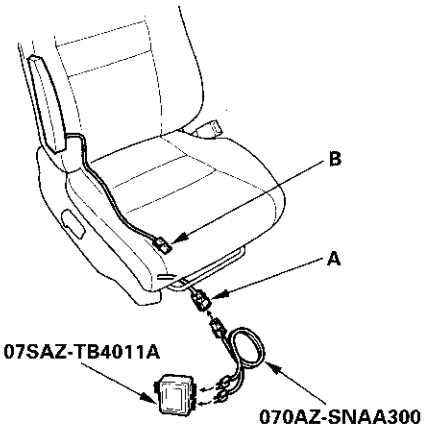

5. Connect the SRS inflator simulator (2 Ω connectors) and simulator lead L to the floor wire harness.

6. Reconnect the negative cable to the battery.

7. Clear the DTC memory.

8. Read the DTC (see page 24-22).

   Is DTC 32-3x indicated?

   YES—Go to step 9.

   NO—Short to another wire in the front passenger's side airbag inflator; replace the front passenger's side airbag (see page 24-187), then clear the DTC. ■

9. Turn the ignition switch to LOCK (0). Disconnect the negative cable from the battery, then wait at least 3 minutes.

10. Disconnect both seat belt tensioner 4P connectors (see step 7 on page 24-21) and both seat belt buckle tensioner 4P connectors (see step 8 on page 24-21).

11. Disconnect SRS unit connector B (28P) from the SRS unit (see step 9 on page 24-21).

12. Disconnect the SRS inflator simulator from the SRS simulator lead. Do not disconnect the simulator lead from the floor wire harness 2P connector.

13. Connect the SRS short cancellers (070AZ-SAA0100) to SRS unit connector B (28P) terminals No. 19 and No. 20 (see page 24-18).

14. Measure the resistance between the terminals of the black SRS simulator lead (A). There should be an open circuit or at least 1 MΩ.

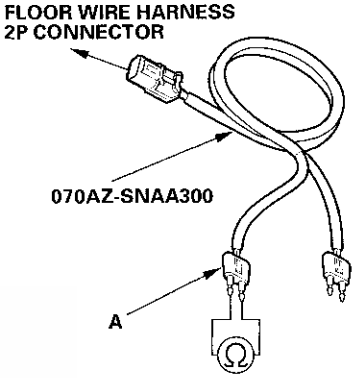

   Is the resistance as specified?

   YES—Faulty SRS unit or poor connection at SRS unit connector B (28P) and the SRS unit. Check the connection; if the connection is OK, replace the SRS unit (see page 24-199). ■

   NO—Short in the floor wire harness; replace the floor wire harness, then clear the DTC. ■

DTC Troubleshooting (cont'd)

DTC 32-8x ("x" can be 0 thru 9 or A thru F): Short to Power in the Front Passenger's Side Airbag Inflator

Special Tools Required
- SRS inflator simulator 07SAZ-TB4011A
- SRS simulator lead L 070AZ-SNAA300

NOTE: Before doing this troubleshooting procedure, review SRS Precautions and Procedures (see page 24-13), General Troubleshooting Information (see page 24-22), and Battery Terminal Disconnection and Reconnection (see page 22-62).

1. Clear the DTC memory (see page 24-23).

2. Turn the ignition switch to ON (II), and check that the SRS indicator comes on for about 6 seconds and then goes off.

   Does the SRS indicator stay on, and is DTC 32-8x indicated?

   YES—Go to step 3.

   NO—Intermittent failure, system is OK at this time. Go to Troubleshooting Intermittent Failures (see page 24-24). If another DTC is indicated, troubleshoot the DTC.■

3. Turn the ignition switch to LOCK (0). Disconnect the negative cable from the battery, then wait at least 3 minutes.

4. Disconnect the floor wire harness 2P connector (A) from the front passenger's side airbag (B).

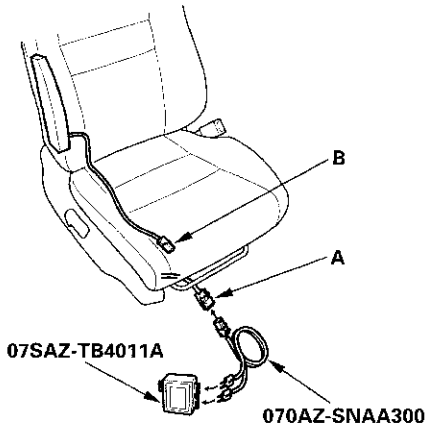

5. Connect the SRS inflator simulator (2 Ω connectors) and simulator lead L to the floor wire harness.

6. Reconnect the negative cable to the battery.

7. Clear the DTC memory.

8. Read the DTC (see page 24-22).

   Is DTC 32-8x indicated?

   YES—Go to step 9.

   NO—Short to power in the front passenger's side airbag inflator; replace the front passenger's side airbag (see page 24-187), then clear the DTC.■

9. Turn the ignition switch to LOCK (0). Disconnect the negative cable from the battery, then wait at least 3 minutes.

10. Disconnect both seat belt tensioner 4P connectors (see step 7 on page 24-21) and both seat belt buckle tensioner 4P connectors (see step 8 on page 24-21).

11. Disconnect SRS unit connector B (28P) from the SRS unit (see step 9 on page 24-21).

12. Disconnect the SRS inflator simulator from the SRS simulator lead. Do not disconnect the simulator lead from the floor wire harness 2P connector.

13. Reconnect the negative cable to the battery.

14. Turn the ignition switch to ON (II).

15. Measure the voltage between each terminal of the black SRS simulator lead (A) and body ground. There should be less than 0.2 V.

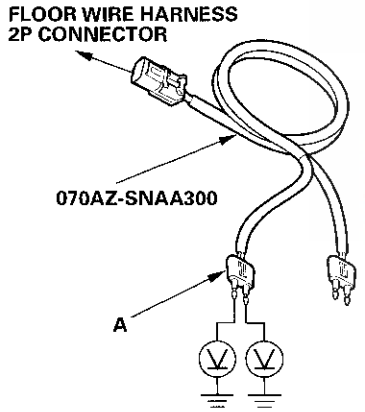

Is the voltage as specified?

YES—Faulty SRS unit or poor connection at SRS unit connector B (28P) and the SRS unit. Check the connection; if the connection is OK, replace the SRS unit (see page 24-199). ■

NO—Short to power in the floor wire harness; replace the floor wire harness, then clear the DTC. ■

DTC 32-9x ("x" can be 0 thru 9 or A thru F): Short to Ground in the Front Passenger's Side Airbag Inflator

Special Tools Required
- SRS inflator simulator 07SAZ-TB4011A
- SRS simulator lead L 070AZ-SNAA300

NOTE: Before doing this troubleshooting procedure, review SRS Precautions and Procedures (see page 24-13), General Troubleshooting Information (see page 24-22), and Battery Terminal Disconnection and Reconnection (see page 22-62).

1. Clear the DTC memory (see page 24-23).

2. Turn the ignition switch to ON (II), and check that the SRS indicator comes on for about 6 seconds and then goes off.

   Does the SRS indicator stay on, and is DTC 32-9x indicated?

   YES—Go to step 3.

   NO—Intermittent failure, system is OK at this time. Go to Troubleshooting Intermittent Failures (see page 24-24). If another DTC is indicated, troubleshoot the DTC. ■

(cont'd)

DTC Troubleshooting (cont'd)

3. Turn the ignition switch to LOCK (0). Disconnect the negative cable from the battery, then wait at least 3 minutes.

4. Disconnect the floor wire harness 2P connector (A) from the front passenger's side airbag (B).

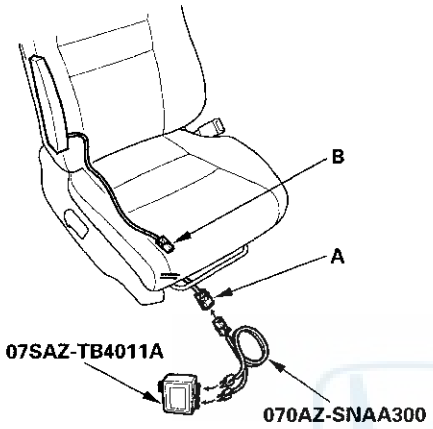

5. Connect the SRS inflator simulator (2 Ω connectors) and simulator lead L to the floor wire harness.

6. Reconnect the negative cable to the battery.

7. Clear the DTC memory.

8. Read the DTC (see page 24-22).

   Is DTC 32-9x indicated?

   YES—Go to step 9.

   NO—Short to ground in the front passenger's side airbag inflator; replace the front passenger's side airbag (see page 24-187), then clear the DTC. ■

9. Turn the ignition switch to LOCK (0). Disconnect the negative cable from the battery, then wait at least 3 minutes.

10. Disconnect both seat belt tensioner 4P connectors (see step 7 on page 24-21) and both seat belt buckle tensioner 4P connectors (see step 8 on page 24-21).

11. Disconnect SRS unit connector B (28P) from the SRS unit (see step 9 on page 24-21).

12. Disconnect the SRS inflator simulator from the SRS simulator lead. Do not disconnect the simulator lead from the floor wire harness 2P connector.

13. Measure the resistance between each terminal of the black SRS simulator lead (A) and body ground. There should be an open circuit or at least 1 MΩ.

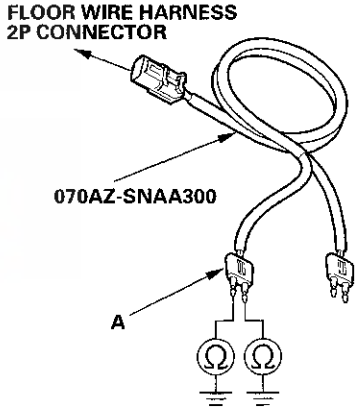

   Is the resistance as specified?

   YES—Faulty SRS unit or poor connection at SRS unit connector B (28P) and the SRS unit. Check the connection; if the connection is OK, replace the SRS unit (see page 24-199). ■

   NO—Short to ground in the floor wire harness; replace the floor wire harness, then clear the DTC. ■

DTC 33-1x ("x" can be 0 thru 9 or A thru F): Open in the Left Side Curtain Airbag Inflator

Special Tools Required
- SRS inflator simulator 07SAZ-TB4011A
- SRS simulator lead L 070AZ-SNAA300

NOTE: Before doing this troubleshooting procedure, review SRS Precautions and Procedures (see page 24-13), General Troubleshooting Information (see page 24-22), and Battery Terminal Disconnection and Reconnection (see page 22-62).

1. Clear the DTC memory (see page 24-23).

2. Turn the ignition switch to ON (II), and check that the SRS indicator comes on for about 6 seconds and then goes off.

   Does the SRS indicator stay on, and is DTC 33-1x indicated?

   YES—Go to step 3.

   NO—Intermittent failure, system is OK at this time. Go to Troubleshooting Intermittent Failures (see page 24-24). If another DTC is indicated, troubleshoot the DTC.■

3. Turn the ignition switch to LOCK (0). Disconnect the negative cable from the battery, then wait at least 3 minutes.

4. Remove the headliner (see page 20-71), then disconnect the left side curtain airbag 2P connector (A) from the floor wire harness (B).

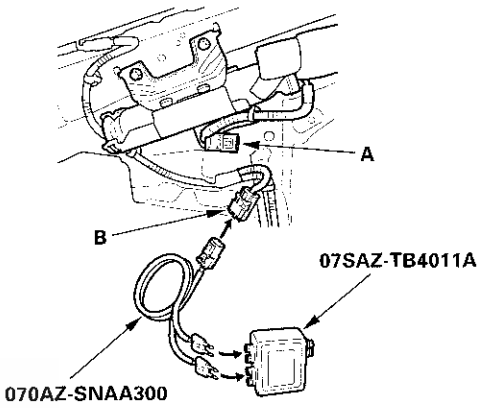

5. Connect the SRS inflator simulator (2 Ω connectors) and simulator lead L to the floor wire harness.

6. Reconnect the negative cable to the battery.

7. Clear the DTC memory.

8. Read the DTC (see page 24-22).

   Is DTC 33-1x indicated?

   YES—Go to step 9.

   NO—Open in the left side curtain airbag; replace the left side curtain airbag (see page 24-188), then clear the DTC.■

(cont'd)

DTC Troubleshooting (cont'd)

9. Turn the ignition switch to LOCK (0). Disconnect the negative cable from the battery, then wait at least 3 minutes.

10. Disconnect both seat belt tensioner 4P connectors (see step 7 on page 24-21) and both seat belt buckle tensioner 4P connectors (see step 8 on page 24-21).

11. Disconnect SRS unit connector B (28P) from the SRS unit (see step 9 on page 24-21). Do not disconnect the simulator lead from the floor wire harness.

12. Disconnect the SRS inflator simulator from the SRS simulator lead. Do not disconnect the simulator lead from the floor wire harness 2P connector.

13. Measure the resistance between the terminals of the black SRS simulator lead (A). There should be less than 1.0 Ω.

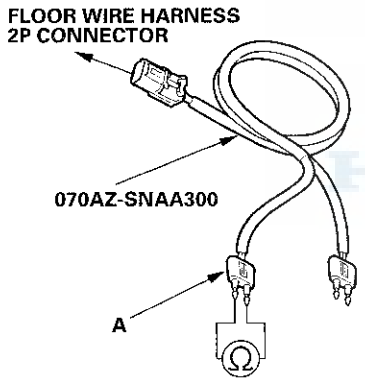

Is the resistance as specified?

YES—Faulty SRS unit or poor connection at the SRS unit connector B (28P) and the SRS unit. Check the connection; if the connection is OK, replace the SRS unit (see page 24-199).■

NO—Open in the floor wire harness; replace the floor wire harness, then clear the DTC.■

DTC 33-3x ("x" can be 0 thru 9 or A thru F): Short to Another Wire or Decreased Resistance in the Left Side Curtain Airbag Inflator

Special Tools Required
- SRS inflator simulator 07SAZ-TB4011A
- SRS simulator lead L 070AZ-SNAA300
- SRS short canceller 070AZ-SAA0100

NOTE: Before doing this troubleshooting procedure, review SRS Precautions and Procedures (see page 24-13), General Troubleshooting Information (see page 24-22), and Battery Terminal Disconnection and Reconnection (see page 22-62).

1. Clear the DTC memory (see page 24-23).

2. Turn the ignition switch to ON (II), and check that the SRS indicator comes on for about 6 seconds and then goes off.

Does the SRS indicator stay on, and is DTC 33-3x indicated?

YES—Go to step 3.

NO—Intermittent failure, system is OK at this time. Go to Troubleshooting Intermittent Failures (see page 24-24). If another DTC is indicated, troubleshoot the DTC.■

3. Turn the ignition switch to LOCK (0). Disconnect the negative cable from the battery, then wait at least 3 minutes.

4. Remove the headliner (see page 20-71), then disconnect the left side curtain airbag 2P connector (A) from the floor wire harness (B).

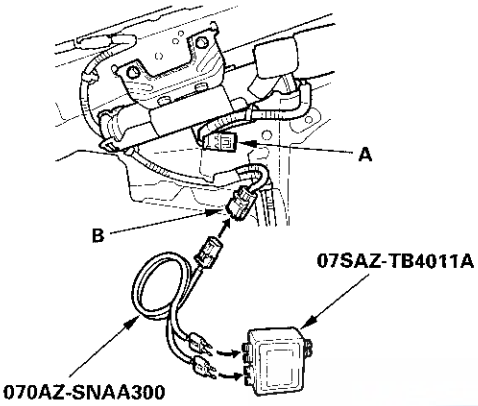

5. Connect the SRS inflator simulator (2 Ω connectors) and simulator lead L to the floor wire harness.

6. Reconnect the negative cable to the battery.

7. Clear the DTC memory.

8. Read the DTC (see page 24-22).

   Is DTC 33-3x indicated?

   YES—Go to step 9.

   NO—Short to another wire in the left side curtain airbag inflator; replace the left side curtain airbag (see page 24-188), then clear the DTC. ■

9. Turn the ignition switch to LOCK (0). Disconnect the negative cable from the battery, then wait at least 3 minutes.

10. Disconnect both seat belt tensioner 4P connectors (see step 7 on page 24-21) and both seat belt buckle tensioner 4P connectors (see step 8 on page 24-21).

11. Disconnect SRS unit connector B (28P) from the SRS unit (see step 9 on page 24-21).

12. Disconnect the SRS inflator simulator from the SRS simulator lead. Do not disconnect the simulator lead from the floor wire harness 2P connector.

13. Connect the SRS short cancellers (070AZ-SAA0100) to SRS unit connector B (28P) terminals No. 21 and No. 22 (see page 24-18).

(cont'd)

DTC Troubleshooting (cont'd)

14. Measure the resistance between the terminals of the black SRS simulator lead (A). There should be an open circuit or at least 1 MΩ.

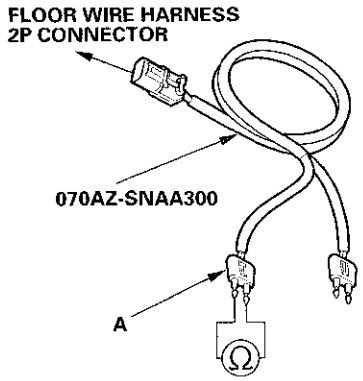

Is the resistance as specified?

YES—Faulty SRS unit or poor connection at SRS unit connector B (28P) and the SRS unit. Check the connection; if the connection is OK, replace the SRS unit (see page 24-199).■

NO—Short to another wire in the floor wire harness; replace the floor wire harness, then clear the DTC.■

DTC 33-8x ("x" can be 0 thru 9 or A thru F): Short to Power in the Left Side Curtain Airbag Inflator

Special Tools Required
- SRS inflator simulator 07SAZ-TB4011A
- SRS simulator lead L 070AZ-SNAA300

NOTE: Before doing this troubleshooting procedure, review SRS Precautions and Procedures (see page 24-13), General Troubleshooting Information (see page 24-22), and Battery Terminal Disconnection and Reconnection (see page 22-62).

1. Clear the DTC memory (see page 24-23).

2. Turn the ignition switch to ON (II), and check that the SRS indicator comes on for about 6 seconds and then goes off.

   Does the SRS indicator stay on, and is DTC 33-8x indicated?

   YES—Go to step 3.

   NO—Intermittent failure, system is OK at this time. Go to Troubleshooting Intermittent Failures (see page 24-24). If another DTC is indicated, troubleshoot the DTC.■

3. Turn the ignition switch to LOCK (0). Disconnect the negative cable from the battery, then wait at least 3 minutes.

4. Remove the headliner (see page 20-71), then disconnect the left side curtain airbag 2P connector (A) from the floor wire harness (B).

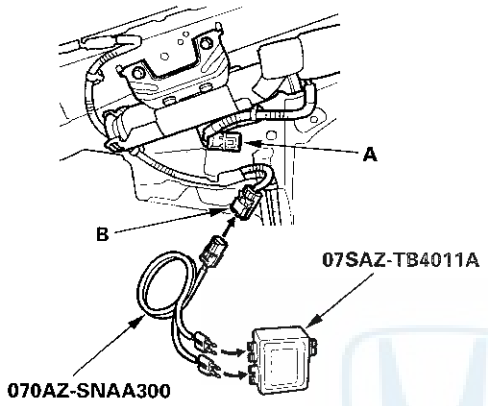

5. Connect the SRS inflator simulator (2 Ω connectors) and simulator lead L to the floor wire harness.

6. Reconnect the negative cable to the battery.

7. Clear the DTC memory.

8. Read the DTC (see page 24-22).

   Is DTC 33-8x indicated?

   YES—Go to step 9.

   NO—Short to power in the left side curtain airbag inflator; replace the left side curtain airbag (see page 24-188), then clear the DTC.■

9. Turn the ignition switch to LOCK (0). Disconnect the negative cable from the battery, then wait at least 3 minutes.

10. Disconnect both seat belt tensioner 4P connectors (see step 7 on page 24-21) and both seat belt buckle tensioner 4P connectors (see step 8 on page 24-21).

11. Disconnect the SRS unit connector B (28P) from the SRS unit (see step 9 on page 24-21).

12. Reconnect the negative cable to the battery.

13. Turn the ignition switch to ON (II).

14. Disconnect the SRS inflator simulator from the SRS simulator lead. Do not disconnect the simulator lead from the floor wire harness 2P connector.

15. Measure the voltage between each terminal of the black SRS simulator lead (A) and body ground. There should be less than 0.2 V.

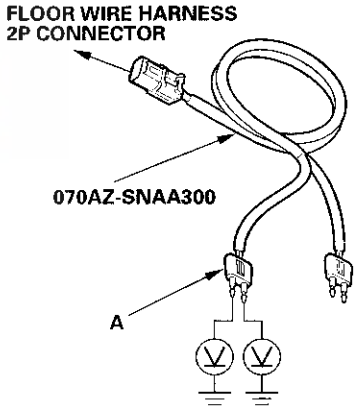

Is the voltage as specified?

YES—Faulty SRS unit or poor connection at SRS unit connector B (28P) and the SRS unit. Check the connection; if the connection is OK, replace the SRS unit (see page 24-199).■

NO—Short to power in the floor wire harness; replace the floor wire harness, then clear the DTC.■

DTC Troubleshooting (cont'd)

DTC 33-9x ("x" can be 0 thru 9 or A thru F): Short to Ground in the Left Side Curtain Airbag Inflator

Special Tools Required
- SRS inflator simulator 07SAZ-TB4011A
- SRS simulator lead L 070AZ-SNAA300

NOTE: Before doing this troubleshooting procedure, review SRS Precautions and Procedures (see page 24-13), General Troubleshooting Information (see page 24-22), and Battery Terminal Disconnection and Reconnection (see page 22-62).

1. Clear the DTC memory (see page 24-23).

2. Turn the ignition switch to ON (II), and check that the SRS indicator comes on for about 6 seconds and then goes off.

   Does the SRS indicator stay on, and is DTC 33-9x indicated?

   YES—Go to step 3.

   NO—Intermittent failure, system is OK at this time. Go to Troubleshooting Intermittent Failures (see page 24-24). If another DTC is indicated, troubleshoot the DTC. ■

3. Turn the ignition switch to LOCK (0). Disconnect the negative cable from the battery, then wait at least 3 minutes.

4. Remove the headliner (see page 20-71), then disconnect the left side curtain airbag 2P connector (A) from the floor wire harness (B).

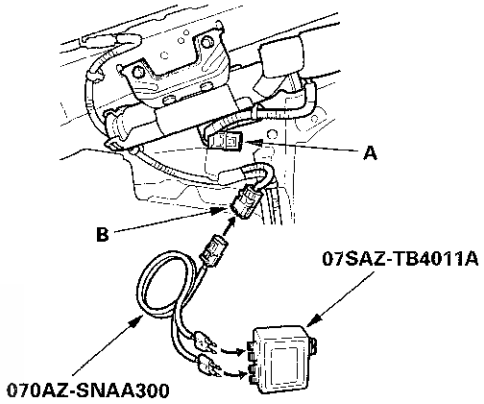

5. Connect the SRS inflator simulator (2 Ω connectors) and simulator lead L to the floor wire harness.

6. Reconnect the negative cable to the battery.

7. Clear the DTC memory.

8. Read the DTC (see page 24-22).

   Is DTC 33-9x indicated?

   YES—Go to step 9.

   NO—Short to ground in the left side curtain airbag inflator; replace the left side curtain airbag (see page 24-188), then clear the DTC. ■

9. Turn the ignition switch to LOCK (0). Disconnect the negative cable from the battery, then wait at least 3 minutes.

10. Disconnect both seat belt tensioner 4P connectors (see step 7 on page 24-21) and both seat belt buckle tensioner 4P connectors (see step 8 on page 24-21).

11. Disconnect SRS unit connector B (28P) from the SRS unit (see step 9 on page 24-21).

12. Disconnect the SRS inflator simulator from the SRS simulator lead. Do not disconnect the simulator lead from the floor wire harness 2P connector.

13. Measure the resistance between each terminal of the black SRS simulator lead (A) and body ground. There should be an open circuit or at least 1 MΩ.

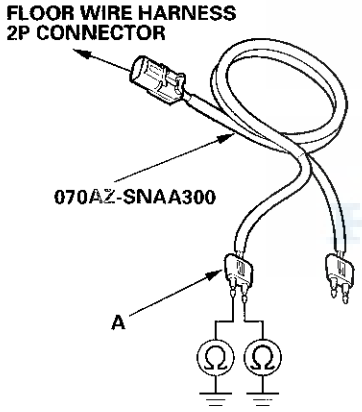

Is the resistance as specified?

YES—Faulty SRS unit or poor connection at SRS unit connector B (28P) and the SRS unit. Check the connection; if the connection is OK, replace the SRS unit (see page 24-199). ■

NO—Short to ground in the floor wire harness; replace the floor wire harness, then clear the DTC. ■

DTC 34-1x ("x" can be 0 thru 9 or A thru F): Open in the Right Side Curtain Airbag Inflator

Special Tools Required
- SRS inflator simulator 07SAZ-TB4011A
- SRS simulator lead L 070AZ-SNAA300

NOTE: Before doing this troubleshooting procedure, review SRS Precautions and Procedures (see page 24-13), General Troubleshooting Information (see page 24-22), and Battery Terminal Disconnection and Reconnection (see page 22-62).

1. Clear the DTC memory (see page 24-23).

2. Turn the ignition switch to ON (II), and check that the SRS indicator comes on for about 6 seconds and then goes off.

   Does the SRS indicator stay on, and is DTC 34-1x indicated?

   YES—Go to step 3.

   NO—Intermittent failure, system is OK at this time. Go to Troubleshooting Intermittent Failures (see page 24-24). If another DTC is indicated, troubleshoot the DTC. ■

(cont'd)

DTC Troubleshooting (cont'd)

3. Turn the ignition switch to LOCK (0). Disconnect the negative cable from the battery, then wait at least 3 minutes.

4. Remove the headliner (see page 20-71), then disconnect the right side curtain airbag 2P connector (A) from the floor wire harness (B).

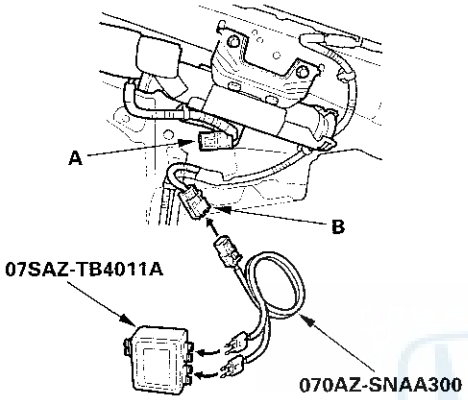

5. Connect the SRS inflator simulator (2 Ω connectors) and simulator lead L to the floor wire harness.

6. Reconnect the negative cable to the battery.

7. Clear the DTC memory.

8. Read the DTC (see page 24-22).

   Is DTC 34-1x indicated?

   YES—Go to step 9.

   NO—Open in the right side curtain airbag inflator, replace the right side curtain airbag (see page 24-188), then clear the DTC. ■

9. Turn the ignition switch to LOCK (0). Disconnect the negative cable from the battery, then wait at least 3 minutes.

10. Disconnect both seat belt tensioner 4P connectors (see step 7 on page 24-21) and both seat belt buckle tensioner 4P connectors (see step 8 on page 24-21).

11. Disconnect SRS unit connector B (28P) from the SRS unit (see step 9 on page 24-21). Do not disconnect the simulator lead from the floor wire harness.

12. Disconnect the SRS inflator simulator from the SRS simulator lead. Do not disconnect the simulator lead from the floor wire harness 2P connector.

13. Measure the resistance between the terminals of the black SRS simulator lead (A). There should be less than 1.0 Ω.

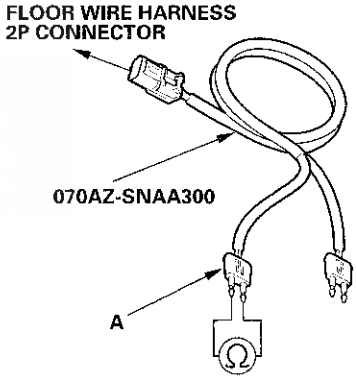

   Is the resistance as specified?

   YES—Faulty SRS unit or poor connection at SRS unit connector B (28P) and the SRS unit. Check the connection; if the connection is OK, replace the SRS unit (see page 24-199). ■

   NO—Open in the floor wire harness; replace the floor wire harness, then clear the DTC. ■

DTC 34-3x ("x" can be 0 thru 9 or A thru F): Short to Another Wire or Decreased Resistance in the Right Side Curtain Airbag Inflator

Special Tools Required
- SRS inflator simulator 07SAZ-TB4011A
- SRS simulator lead L 070AZ-SNAA300
- SRS short canceller 070AZ-SAA0100

NOTE: Before doing this troubleshooting procedure, review SRS Precautions and Procedures (see page 24-13), General Troubleshooting Information (see page 24-22), and Battery Terminal Disconnection and Reconnection (see page 22-62).

1. Clear the DTC memory (see page 24-23).

2. Turn the ignition switch to ON (II), and check that the SRS indicator comes on for about 6 seconds and then goes off.

   Does the SRS indicator stay on, and is DTC 34-3x indicated?

   YES—Go to step 3.

   NO—Intermittent failure, system is OK at this time. Go to Troubleshooting Intermittent Failures (see page 24-24). If another DTC is indicated, troubleshoot the DTC.■

3. Turn the ignition switch to LOCK (0). Disconnect the battery negative cable, then wait at least 3 minutes.

4. Remove the headliner (see page 20-71), then disconnect the right side curtain airbag 2P connector (A) from the floor wire harness (B).

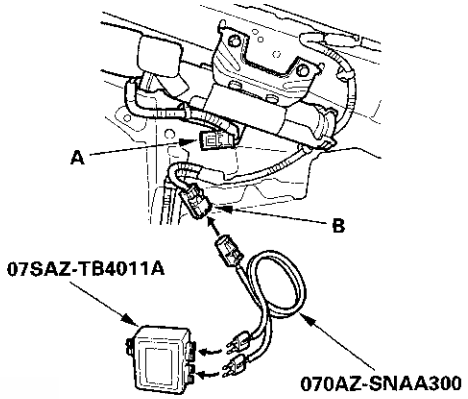

5. Connect the SRS inflator simulator (2 Ω connectors) and simulator lead L to the floor wire harness.

6. Reconnect the negative cable to the battery.

7. Clear the DTC memory.

(cont'd)

DTC Troubleshooting (cont'd)

8. Read the DTC (see page 24-22).

   Is DTC 34-3x indicated?

   YES—Go to step 9.

   NO—Short to another wire in the right side curtain airbag inflator; replace the right side curtain airbag (see page 24-188), then clear the DTC. ■

9. Turn the ignition switch to LOCK (0). Disconnect the battery negative cable, then wait at least 3 minutes.

10. Disconnect both seat belt tensioner 4P connectors (see step 7 on page 24-21) and both seat belt buckle tensioner 4P connectors (see step 8 on page 24-21).

11. Disconnect SRS unit connector B (28P) from the SRS unit (see step 9 on page 24-21).

12. Disconnect the SRS inflator simulator from the SRS simulator lead. Do not disconnect the simulator lead from the floor wire harness 2P connector.

13. Connect the SRS short cancellers (070AZ-SAA0100) to SRS unit connector B (28P) terminals No. 23 and No. 24 (see page 24-18).

14. Measure the resistance between the terminals of the black SRS simulator lead (A). There should be an open circuit or at least 1 MΩ.

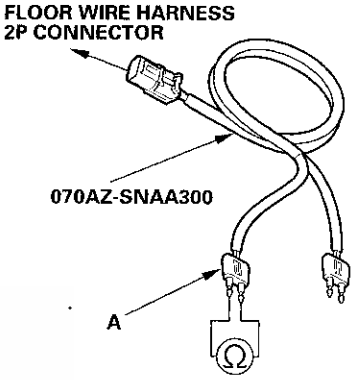

   Is the resistance as specified?

   YES—Faulty SRS unit or poor connection at SRS unit connector B (28P) and the SRS unit. Check the connection; if the connection is OK, replace the SRS unit (see page 24-199). ■

   NO—Short in the floor wire harness; replace the floor wire harness, then clear the DTC. ■

DTC 34-8x ("x" can be 0 thru 9 or A thru F): Short to Power in the Right Side Curtain Airbag Inflator

Special Tools Required
- SRS inflator simulator 07SAZ-TB4011A
- SRS simulator lead L 070AZ-SNAA300

NOTE: Before doing this troubleshooting procedure, review SRS Precautions and Procedures (see page 24-13), General Troubleshooting Information (see page 24-22), and Battery Terminal Disconnection and Reconnection (see page 22-62).

1. Clear the DTC memory (see page 24-23).

2. Turn the ignition switch to ON (II), and check that the SRS indicator comes on for about 6 seconds and then goes off.

   Does the SRS indicator stay on, and is DTC 34-8x indicated?

   YES—Go to step 3.

   NO—Intermittent failure, system is OK at this time. Go to Troubleshooting Intermittent Failures (see page 24-24). If another DTC is indicated, troubleshoot the DTC.■

3. Turn the ignition switch to LOCK (0). Disconnect the negative cable from the battery, then wait at least 3 minutes.

4. Remove the headliner (see page 20-71), then disconnect the right side curtain airbag 2P connector (A) from the floor wire harness (B).

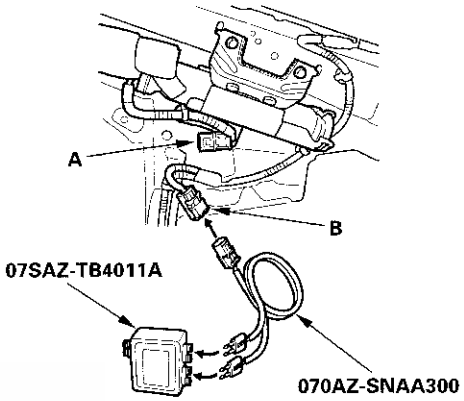

5. Connect the SRS inflator simulator (2 Ω connectors) and simulator lead L to the floor wire harness.

6. Reconnect the negative cable to the battery.

7. Clear the DTC memory.

8. Read the DTC (see page 24-22).

   Is DTC 34-8x indicated?

   YES—Go to step 9.

   NO—Short to power in the right side curtain airbag inflator; replace the right side curtain airbag (see page 24-188), then clear the DTC.■

(cont'd)

DTC Troubleshooting (cont'd)

9. Turn the ignition switch to LOCK (0). Disconnect the negative cable from the battery, then wait at least 3 minutes.

10. Disconnect both seat belt tensioner 4P connectors (see step 7 on page 24-21) and both seat belt buckle tensioner 4P connectors (see step 8 on page 24-21).

11. Disconnect SRS unit connector B (28P) from the SRS unit (see step 9 on page 24-21).

12. Reconnect the negative cable to the battery.

13. Turn the ignition switch to ON (II).

14. Disconnect the SRS inflator simulator from the SRS simulator lead. Do not disconnect the simulator lead from the floor wire harness 2P connector.

15. Measure the voltage between each terminal of the black SRS simulator lead (A) and body ground. There should be less than 1.0 Ω.

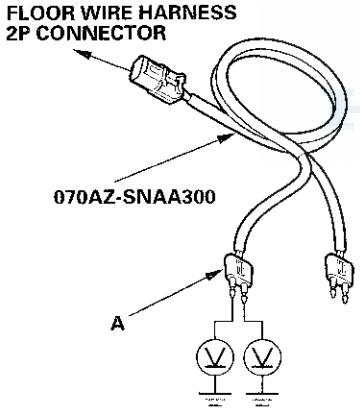

Is the voltage as specified?

YES—Faulty SRS unit or poor connection at SRS unit connector B (28P) and the SRS unit. Check the connection; if the connection is OK, replace the SRS unit (see page 24-199). ■

NO—Short to power in the floor wire harness; replace the floor wire harness, then clear the DTC. ■

DTC 34-9x ("x" can be 0 thru 9 or A thru F): Short to Ground in the Right Side Curtain Airbag Inflator

Special Tools Required
- SRS inflator simulator 07SAZ-TB4011A
- SRS simulator lead L 070AZ-SNAA300

NOTE: Before doing this troubleshooting procedure, review SRS Precautions and Procedures (see page 24-13), General Troubleshooting Information (see page 24-22), and Battery Terminal Disconnection and Reconnection (see page 22-62).

1. Clear the DTC memory (see page 24-23).

2. Turn the ignition switch to ON (II), and check that the SRS indicator comes on for about 6 seconds and then goes off.

   Does the SRS indicator stay on, and is DTC 34-9x indicated?

   YES—Go to step 3.

   NO—Intermittent failure, system is OK at this time. Go to Troubleshooting Intermittent Failures (see page 24-24). If another DTC is indicated, troubleshoot the DTC. ■

3. Turn the ignition switch to LOCK (0). Disconnect the negative cable from the battery, then wait at least 3 minutes.

4. Remove the headliner (see page 20-71), then disconnect the right side curtain airbag 2P connector (A) from the floor wire harness (B).

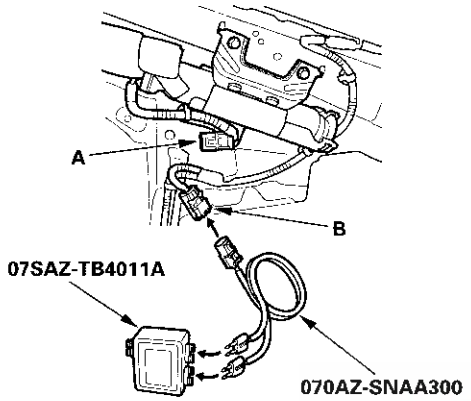

5. Connect the SRS inflator simulator (2 Ω connectors) and simulator lead L to the floor wire harness.

6. Reconnect the negative cable to the battery.

7. Clear the DTC memory.

8. Read the DTC (see page 24-22).

   Is DTC 34-9x indicated?

   YES—Go to step 9.

   NO—Short to ground in the right side curtain airbag inflator; replace the right side curtain airbag (see page 24-188), then clear the DTC.■

9. Turn the ignition switch to LOCK (0). Disconnect the negative cable from the battery, then wait at least 3 minutes.

10. Disconnect both seat belt tensioner 4P connectors (see step 7 on page 24-21) and both seat belt buckle tensioner 4P connectors (see step 8 on page 24-21).

11. Disconnect SRS unit connector B (28P) from the SRS unit (see step 9 on page 24-21).

12. Disconnect the SRS inflator simulator from the SRS simulator lead. Do not disconnect the simulator lead from the floor wire harness 2P connector.

13. Measure the resistance between each terminal of the black SRS simulator lead (A) and body ground. There should be an open circuit or at least 1 MΩ.

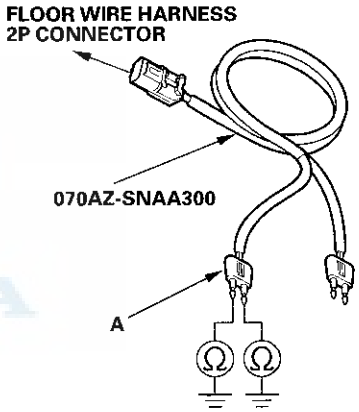

   Is the resistance as specified?

   YES—Faulty SRS unit or poor connection at SRS unit connector B (28P) and the SRS unit. Check the connection; if the connection is OK, replace the SRS unit (see page 24-199).■

   NO—Short to ground in the floor wire harness; replace the floor wire harness, then clear the DTC.■

DTC Troubleshooting (cont'd)

DTC 41-1x ("x" can be 0 thru 9 or A thru F): No Signal From the Left Front Impact Sensor

Special Tools Required
- SRS inflator simulator 07SAZ-TB4011A
- SRS simulator lead L 070AZ-SNAA300

NOTE: Before doing this troubleshooting procedure, review SRS Precautions and Procedures (see page 24-13), General Troubleshooting Information (see page 24-22), and Battery Terminal Disconnection and Reconnection (see page 22-62).

1. Clear the DTC memory (see page 24-23).

2. Turn the ignition switch to ON (II), and check that the SRS indicator comes on for about 6 seconds and then goes off.

   Does the SRS indicator stay on, and is DTC 41-1x indicated?

   YES—Go to step 3.

   NO—Intermittent failure, system is OK at this time. Go to Troubleshooting Intermittent Failures (see page 24-24). If another DTC is indicated, troubleshoot the DTC.■

3. Turn the ignition switch to LOCK (0).

4. Disconnect the negative cable from the battery, then wait at least 3 minutes.

5. Check the connections between SRS unit connector A (28P) and the SRS unit, between the engine compartment wire harness 2P connector and the left front impact sensor (see page 24-11), and at connector C203 (see page 22-20).

   Are the connections OK?

   YES—Go to step 6.

   NO—Repair the poor connections and retest. If DTC 41-1x is still present, go to step 6.

6. Disconnect the engine compartment wire harness 2P connector (A) from the left front impact sensor.

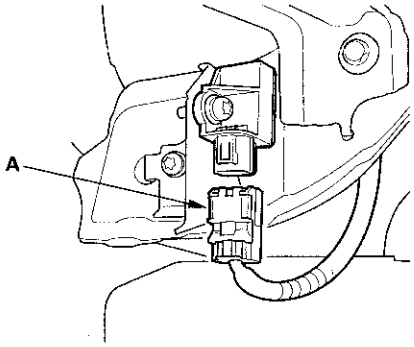

7. Disconnect SRS unit connector A (28P) from the SRS unit (see step 9 on page 24-21).

8. Measure the resistance between SRS unit connector A (28P) terminals No. 15 and No. 27. There should be an open circuit or at least 1 MΩ.

SRS UNIT CONNECTOR A (28P)

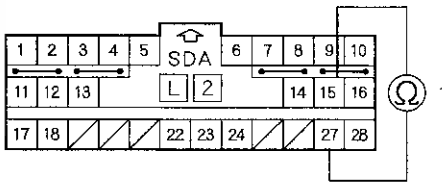

Wire side of female terminals

Is the resistance as specified?

YES—Go to step 9.

NO—Short in the engine compartment wire harness or dashboard wire harness; replace the faulty harness, then clear the DTC.■

9. Measure the resistance between body ground and SRS unit connector A (28P) terminals No. 15 and No. 27, individually. There should be an open circuit or at least 1 MΩ.

SRS UNIT CONNECTOR A (28P)

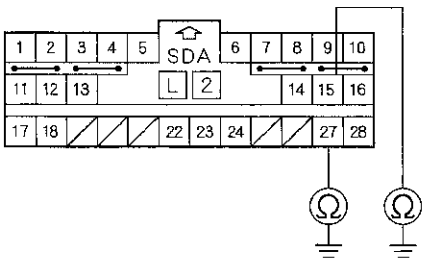

Wire side of female terminals

Is the resistance as specified?

YES—Go to step 10.

NO—Short to ground in the dashboard wire harness or the engine compartment wire harness; replace the faulty harness, then clear the DTC. ■

10. Reconnect the negative cable to the battery.

11. Turn the ignition switch to ON (II).

12. Measure the voltage between body ground and SRS unit connector A (28P) terminals No. 15 and No. 27, individually. There should be less than 0.2 V.

SRS UNIT CONNECTOR A (28P)

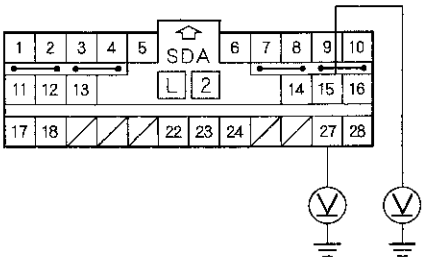

Wire side of female terminals

Is the voltage as specified?

YES—Go to step 13.

NO—Short to power in the engine compartment wire harness or the dashboard wire harness; replace the faulty harness, then clear the DTC. ■

13. Turn the ignition switch to LOCK (0).

14. Connect the SRS inflator simulator (jumper connector) and the black lead (A) of simulator lead L to the engine compartment wire harness 2P connector (B).

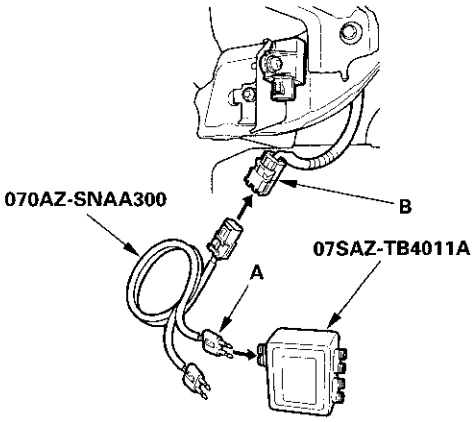

(cont'd)

DTC Troubleshooting (cont'd)

15. Measure the resistance between SRS unit connector A (28P) terminals No. 15 and No. 27. There should be less than 1.0 Ω.

SRS UNIT CONNECTOR A (28P)

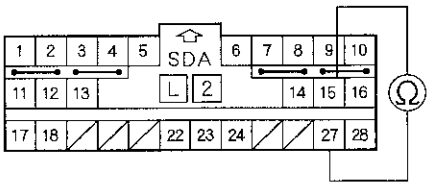

Wire side of female terminals

Is the resistance as specified?

YES—Faulty left front impact sensor or SRS unit; replace the left front impact sensor (see page 24-206), then clear the DTC. If the problem is still present, replace the SRS unit (see page 24-199).■

NO—Poor connection at C203, open in engine compartment wire harness, or open in dashboard wire harness. Inspect C203 (see page 22-18). If it is OK, replace the faulty harness, then clear the DTC.■

DTC 42-1x ("x" can be 0 thru 9 or A thru F): No Signal from the Right Front Impact Sensor

Special Tools Required
- SRS inflator simulator 07SAZ-TB4011A
- SRS simulator lead L 070AZ-SNAA300

NOTE: Before doing this troubleshooting procedure, review SRS Precautions and Procedures (see page 24-13), General Troubleshooting Information (see page 24-22), and Battery Terminal Disconnection and Reconnection (see page 22-62).

1. Clear the DTC memory (see page 24-23).

2. Turn the ignition switch to ON (II), and check that the SRS indicator comes on for about 6 seconds and then goes off.

   Does the SRS indicator stay on, and is DTC 42-1x indicated?

   YES—Go to step 3.

   NO—Intermittent failure, system is OK at this time. Go to Troubleshooting Intermittent Failures (see page 24-24). If another DTC is indicated, troubleshoot the DTC.■

3. Turn the ignition switch to LOCK (0).

4. Disconnect the negative cable from the battery, then wait at least 3 minutes.

5. Check the connections between SRS unit connector A (28P) and the SRS unit, between the engine compartment wire harness 2P connector and the right front impact sensor (see page 24-20), and at connector C203 (see page 22-20).

   Are the connections OK?

   YES—Go to step 6.

   NO—Repair the poor connections and retest. If DTC 42-1x is still present, go to step 6.

6. Disconnect the engine compartment wire harness 2P connector (A) from the right front impact sensor.

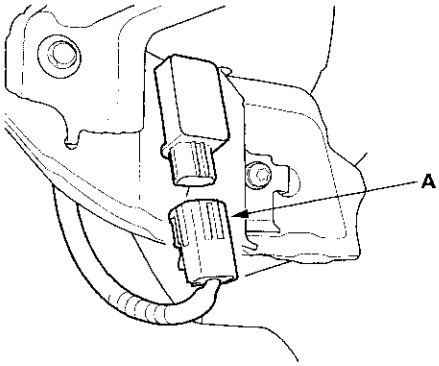

7. Disconnect SRS unit connector A (28P) from the SRS unit (see step 9 on page 24-21).

8. Measure the resistance between SRS unit connector A (28P) terminals No. 16 and No. 28. There should be an open circuit or at least 1 MΩ.

SRS UNIT CONNECTOR A (28P)

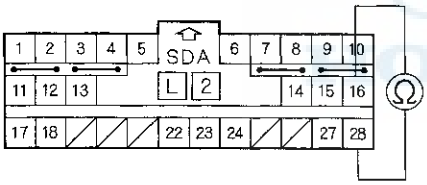

Wire side of female terminals

Is the resistance as specified?

YES—Go to step 9.

NO—Short in the engine compartment wire harness or dashboard wire harness; replace the faulty harness, then clear the DTC. ■

9. Measure the resistance between body ground and SRS unit connector A (28P) terminals No. 16 and No. 28, individually. There should be an open circuit or at least 1 MΩ.

SRS UNIT CONNECTOR A (28P)

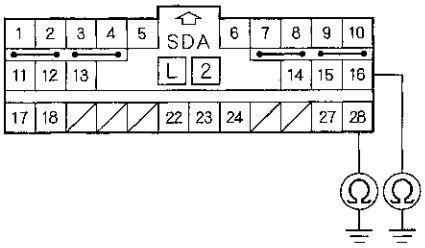

Wire side of female terminals

Is the resistance as specified?

YES—Go to step 10.

NO—Short to ground in the dashboard wire harness or the engine compartment wire harness; replace the faulty harness, then clear the DTC. ■

10. Reconnect the negative cable to the battery.

11. Turn the ignition switch to ON (II).

(cont'd)

DTC Troubleshooting (cont'd)

12. Measure the voltage between body ground and SRS unit connector A (28P) terminals No. 16 and No. 28, individually. There should be less than 0.2 V.

SRS UNIT CONNECTOR A (28P)

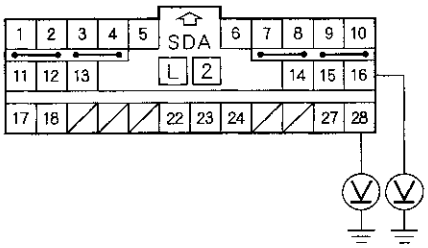

Wire side of female terminals

Is the voltage as specified?

YES—Go to step 13.

NO—Short to power in the engine compartment wire harness or dashboard wire harness; replace the faulty harness, then clear the DTC. ■

13. Turn the ignition switch to LOCK (0).

14. Connect the SRS inflator simulator (jumper connector) and the black lead (A) of simulator lead L to the engine compartment wire harness 2P connector (B).

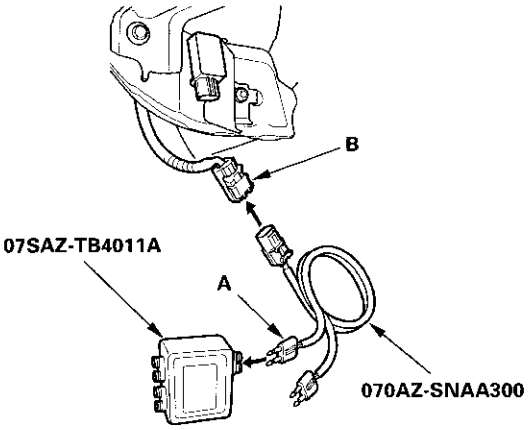

15. Measure the resistance between SRS unit connector A (28P) terminals No. 16 and No. 28. There should be less than 1.0 Ω.

SRS UNIT CONNECTOR A (28P)

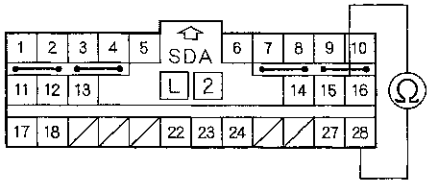

Wire side of female terminals

Is the resistance as specified?

YES—Faulty right front impact sensor or SRS unit; replace the right front impact sensor (see page 24-206), then clear the DTC. If the problem is still present, replace the SRS unit (see page 24-199). ■

NO—Poor connection at C203, open in the engine compartment wire harness, or open in the dashboard wire harness. Inspect C203 (see page 22-20). If it is OK, replace the faulty harness, then clear the DTC. ■

DTC 41-2x, 41-3x, 41-Bx ("x" can be 0 thru 9 or A thru F): Internal Failure of the Left Front Impact Sensor

NOTE: Before doing this troubleshooting procedure, review SRS Precautions and Procedures (see page 24-13) and General Troubleshooting Information (see page 24-22).

1. Clear the DTC memory (see page 24-23).

2. Turn the ignition switch to ON (II), and check that the SRS indicator comes on for about 6 seconds and then goes off.

   Does the SRS indicator stay on, and is DTC 41-2x, 41-3x, or 41-Bx indicated?

   YES—Replace the left front impact sensor (see page 24-206), then clear the DTC. If the DTC returns, replace the SRS unit (see page 24-199). ■

   NO—Intermittent failure, system is OK at this time. Go to Troubleshooting Intermittent Failures (see page 24-24). If another DTC is indicated, troubleshoot the DTC. ■

DTC 42-2x, 42-3x, 42-Bx ("x" can be 0 thru 9 or A thru F): Internal Failure of the Right Front Impact Sensor

NOTE: Before doing this troubleshooting procedure, review SRS Precautions and Procedures (see page 24-13) and General Troubleshooting Information (see page 24-22).

1. Clear the DTC memory (see page 24-23).

2. Turn the ignition switch to ON (II), and check that the SRS indicator comes on for about 6 seconds and then goes off.

   Does the SRS indicator stay on, and is DTC 42-2x, 42-3x, or 42-Bx indicated?

   YES—Replace the right front impact sensor (see page 24-206), then clear the DTC. If the DTC returns, replace the SRS unit (see page 24-199). ■

   NO—Intermittent failure, system is OK at this time. Go to Troubleshooting Intermittent Failures (see page 24-24). If another DTC is indicated, troubleshoot the DTC. ■

HONDA

DTC Troubleshooting (cont'd)

DTC 43-1x ("x" can be 0 thru 9 or A thru F): No Signal from the Left Side Impact Sensor (first)

Special Tools Required
- SRS inflator simulator 07SAZ-TB4011A
- SRS simulator lead L 070AZ-SNAA300

NOTE: Before doing this troubleshooting procedure, review SRS Precautions and Procedures (see page 24-13), General Troubleshooting Information (see page 24-22), and Battery Terminal Disconnection and Reconnection (see page 22-62).

1. Clear the DTC memory (see page 24-23).

2. Turn the ignition switch to ON (II), then wait for 10 seconds.

3. Read the DTC (see page 24-22).

   Is DTC 43-11 indicated?

   YES—Go to step 6.

   NO—Go to step 4.

4. Read the DTC.

   Is DTC 43-12 indicated?

   YES—Go to step 5.

   NO—Intermittent failure, system is OK at this time. Go to Troubleshooting Intermittent Failures (see page 24-24). If DTC 43-1x (except DTC 43-11 and 43-12) is indicated, faulty left side impact sensor (first); replace the left side impact sensor (first) (see page 24-200), then clear the DTC. ■

5. Read the DTC.

   Is DTC B2-11 also indicated?

   YES—Troubleshoot DTC B2-11 (see page 24-170). ■

   NO—Faulty left side impact sensor (first); replace the left side impact sensor (first) (see page 24-200), then clear the DTC. ■

6. Read the DTC.

   Is DTC 45-11 also indicated?

   YES—Faulty left side impact sensor (first); replace the left side impact sensor (first) (see page 24-200), then clear the DTC. ■

   NO—Go to step 7.

7. Turn the ignition switch to LOCK (0).

8. Disconnect the negative cable from the battery, then wait at least 3 minutes.

9. Disconnect both seat belt tensioner 4P connectors (see step 7 on page 24-21) and both seat belt buckle tensioner 4P connectors (see step 8 on page 24-21).

10. Disconnect the floor wire harness 4P connector (A) from the left side impact sensor (first).

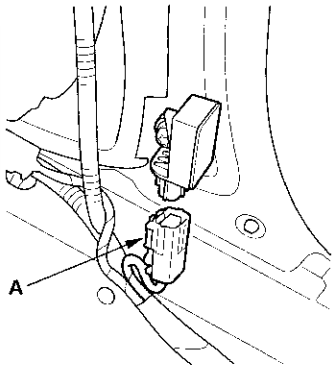

11. Disconnect SRS unit connector B (28P) from the SRS unit (see step 9 on page 24-21).

12. Measure the resistance between SRS unit connector B (28P) terminals No. 25 and No. 26. There should be an open circuit or at least 1 MΩ.

SRS UNIT CONNECTOR B (28P)

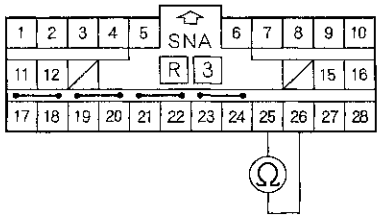

Wire side of female terminals

Is the resistance as specified?

YES—Go to step 13.

NO—Short in the floor wire harness; replace the floor wire harness, then clear the DTC.■

13. Measure the resistance between SRS unit connector B (28P) terminals No. 25 and No. 26, individually. There should be an open circuit or at least 1 MΩ.

SRS UNIT CONNECTOR B (28P)

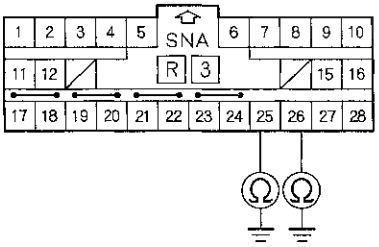

Wire side of female terminals

Is the resistance as specified?

YES—Go to step 14.

NO—Short to ground in the floor wire harness; replace the floor wire harness, then clear the DTC.■

14. Reconnect the negative cable to the battery.

15. Turn the ignition switch to ON (II).

16. Measure the voltage between SRS unit connector B (28P) terminals No. 25 and No. 26, individually. There should be less than 0.2 V.

SRS UNIT CONNECTOR B (28P)

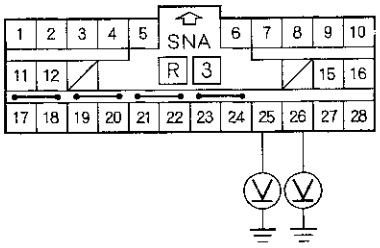

Wire side of female terminals

Is the voltage as specified?

YES—Go to step 17.

NO—Short to power in the floor wire harness; replace the floor wire harness, then clear the DTC.■

(cont'd)

DTC Troubleshooting (cont'd)

17. Turn the ignition switch to LOCK (0).

18. Connect the SRS inflator simulator (jumper connector) and the black lead (A) of simulator lead L to the floor wire harness 4P connector (B).

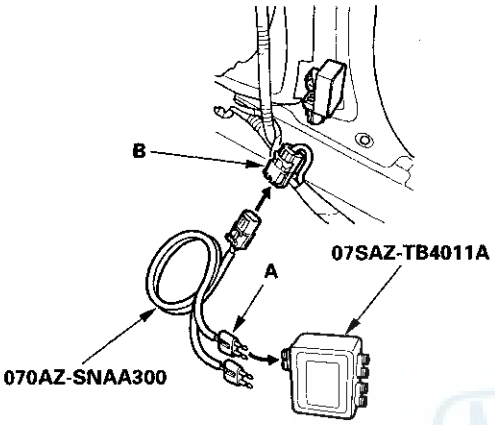

19. Measure the resistance between SRS unit connector B (28P) terminals No. 25 and No. 26. There should be less than 1.0 Ω.

SRS UNIT CONNECTOR B (28P)

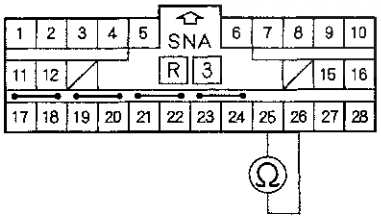

Wire side of female terminals

Is the resistance as specified?

YES—Faulty left side impact sensor (first) or SRS unit; replace the left side impact sensor (first) (see page 24-200), then clear the DTC. If the problem is still present, replace the SRS unit (see page 24-199).■

NO—Open in the floor wire harness; replace the floor wire harness, then clear the DTC.■

DTC 44-1x ("x" can be 0 thru 9 or A thru F): No Signal from the Right Side Impact Sensor (first)

Special Tools Required
- SRS inflator simulator 07SAZ-TB4011A
- SRS simulator lead L 070AZ-SNAA300

NOTE: Before doing this troubleshooting procedure, review SRS Precautions and Procedures (see page 24-13), General Troubleshooting Information (see page 24-22), and Battery Terminal Disconnection and Reconnection (see page 22-62).

1. Clear the DTC memory (see page 24-23).

2. Turn the ignition switch to ON (II), and wait for 10 seconds.

3. Read the DTC (see page 24-22).

   Is DTC 44-11 indicated?

   YES—Go to step 5.

   NO—Go to step 4.

4. Read the DTC.

   Is DTC 44-12 indicated?

   YES—Faulty right side impact sensor (first); replace the right side impact sensor (first) (see page 24-200), then clear the DTC.■

   NO—Intermittent failure, system is OK at this time. Go to Troubleshooting Intermittent Failures (see page 24-24). If DTC 44-1x (except DTC 44-11 and 44-12) is indicated, faulty right side impact sensor (first). Replace the right side impact sensor (first) (see page 24-200), then clear the DTC.■

5. Turn the ignition switch to LOCK (0).

6. Disconnect the negative cable from the battery, then wait at least 3 minutes.

7. Disconnect both seat belt tensioner 4P connectors (see step 7 on page 24-21) and both seat belt buckle tensioner 4P connectors (see step 8 on page 24-21).

8. Disconnect the floor wire harness 4P connector (A) from the right side impact sensor (first).

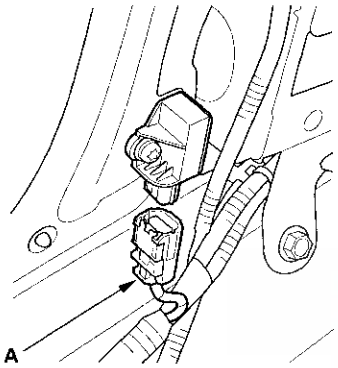

9. Disconnect SRS unit connector B (28P) from the SRS unit (see step 9 on page 24-21).

10. Measure the resistance between SRS unit connector B (28P) terminals No. 27 and No. 28. There should be an open circuit or at least 1 MΩ.

SRS UNIT CONNECTOR B (28P)

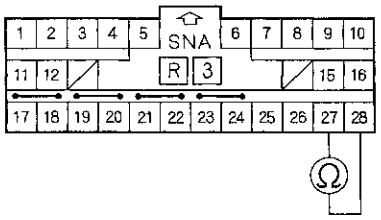

Wire side of female terminals

Is the resistance as specified?

YES—Go to step 11.

NO—Short in the floor wire harness; replace the floor wire harness, then clear the DTC.■

11. Measure the resistance between body ground and SRS unit connector B (28P) terminals, No. 27 and No. 28, individually. There should be an open circuit or at least 1 MΩ.

SRS UNIT CONNECTOR B (28P)

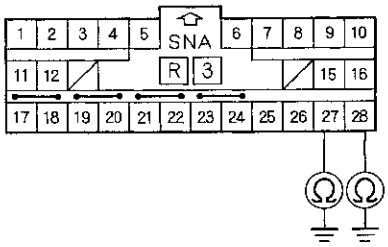

Wire side of female terminals

Is the resistance as specified?

YES—Go to step 12.

NO—Short to ground in the floor wire harness; replace the floor wire harness, then clear the DTC.■

(cont'd)

DTC Troubleshooting (cont'd)

12. Reconnect the negative cable to the battery.

13. Turn the ignition switch to ON (II).

14. Measure the voltage between body ground and SRS unit connector B (28P) terminals No. 27 and No. 28, individually. There should be less than 0.2 V.

SRS UNIT CONNECTOR B (28P)

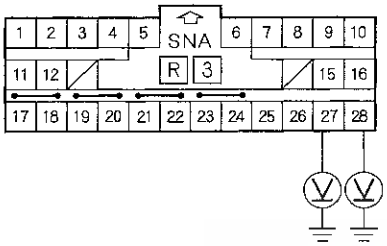

Wire side of female terminals

Is the voltage as specified?

YES—Go to step 15.

NO—Short to power in the floor wire harness; replace the floor wire harness, then clear the DTC. ■

15. Turn the ignition switch to LOCK (0).

16. Connect the SRS inflator simulator (jumper connector) and the black lead (A) of simulator lead L to the floor wire harness 4P connector (B).

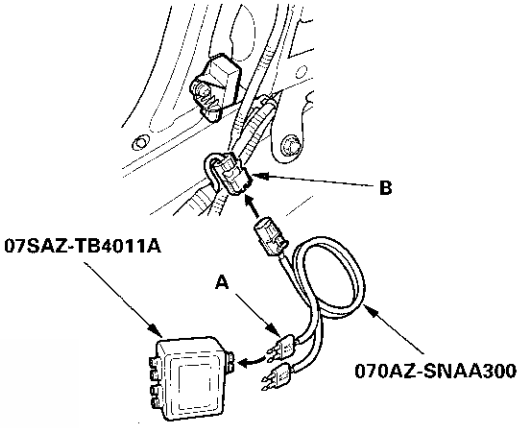

17. Measure the resistance between SRS unit connector B (28P) terminals No. 27 and No. 28. There should be less than 1.0 Ω.

SRS UNIT CONNECTOR B (28P)

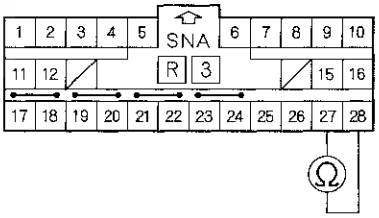

Wire side of female terminals

Is the resistance as specified?

YES—Faulty right side impact sensor (first) or SRS unit; replace the right side impact sensor (first) (see page 24-200), then clear the DTC. If the problem is still present, replace the SRS unit (see page 24-199). ■

NO—Open in the floor wire harness; replace the floor wire harness, then clear the DTC. ■

DTC 43-2x, 43-3x, 43-Bx ("x" can be 0 thru 9 or A thru F): Internal Failure of the Left Side Impact Sensor (first)

NOTE: Before doing this troubleshooting procedure, review SRS Precautions and Procedures (see page 24-13) and General Troubleshooting Information (see page 24-22).

1. Clear the DTC memory (see page 24-23).

2. Turn the ignition switch to ON (II), and check that the SRS indicator comes on for about 6 seconds and then goes off.

   Does the SRS indicator stay on, and is DTC 43-2x, 43-3x, or 43-Bx indicated?

   YES—Replace the left side impact sensor (first) (see page 24-200), then clear the DTC. If the DTC returns, replace the SRS unit (see page 24-199). ■

   NO—Intermittent failure, system is OK at this time. Go to Troubleshooting Intermittent Failures (see page 24-24). If another DTC is indicated, troubleshoot the DTC. ■

DTC 44-2x, 44-3x, 44-Bx ("x" can be 0 thru 9 or A thru F): Internal Failure of the Right Side Impact Sensor (first)

NOTE: Before doing this troubleshooting procedure, review SRS Precautions and Procedures (see page 24-13) and General Troubleshooting Information (see page 24-22).

1. Clear the DTC memory (see page 24-23).

2. Turn the ignition switch to ON (II), and check that the SRS indicator comes on for about 6 seconds and then goes off.

   Does the SRS indicator stay on, and is DTC 44-2x, 44-3x, or 44-Bx indicated?

   YES—Replace the right side impact sensor (first) (see page 24-200), then clear the DTC. If the DTC returns, replace the SRS unit (see page 24-199). ■

   NO—Intermittent failure, system is OK at this time. Go to Troubleshooting Intermittent Failures (see page 24-24). If another DTC is indicated, troubleshoot the DTC. ■

DTC Troubleshooting (cont'd)

DTC 45-1x ("x" can be 0 thru 9 or A thru F): No Signal from the Left Side Impact Sensor (second)

Special Tools Required
- SRS inflator simulator 07SAZ-TB4011A
- SRS simulator lead L 070AZ-SNAA300

NOTE:
- Do not erase the DTC memory before doing this troubleshooting procedure.
- Before doing this troubleshooting procedure, review SRS Precautions and Procedures (see page 24-13), General Troubleshooting Information (see page 24-22), and Battery Terminal Disconnection and Reconnection (see page 22-62).

1. Read the DTC (see page 24-22).

   Is DTC 43-1x or B2-11 also indicated with 45-1x?

   YES—Go to step 5.

   NO—Go to step 2.

2. Clear the DTC memory (see page 24-23).

3. Turn the ignition switch to ON (II), then wait for 10 seconds.

4. Read the DTC.

   Is DTC 45-1x indicated?

   YES—Go to step 5.

   NO—Faulty rear safing sensor; replace the rear safing sensor (see page 24-202), then clear the DTC.■

5. Read the DTC.

   Is DTC 43-1x also indicated with 45-1x?

   YES—Faulty left side impact sensor (first); replace the left side impact sensor (first) (see page 24-200), then clear the DTC.■

   NO—Go to step 6.

6. Read the DTC.

   Is DTC B2-11 also indicated with 45-1x?

   YES—Faulty rear safing sensor; replace the rear safing sensor (see page 24-202), then clear the DTC.■

   NO—Go to step 7.

7. Turn the ignition switch to LOCK (0).

8. Disconnect the negative cable from the battery, then wait at least 3 minutes.

9. Check the connections between the floor wire harness and the left side impact sensor (first) and the rear safing sensor.

   Are the connections OK?

   YES—Go to step 10.

   NO—Repair the connections and retest.

10. Disconnect floor wire harness 2P connector (A) from the left side impact sensor (second).

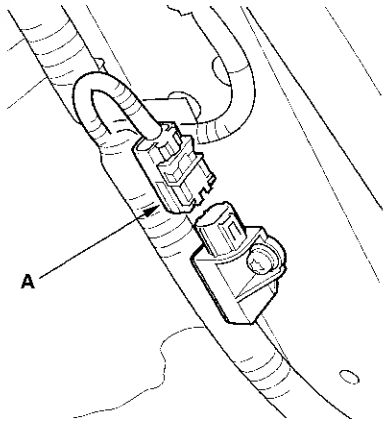

11. Disconnect the floor wire harness 4P connector (A) from the rear safing sensor.

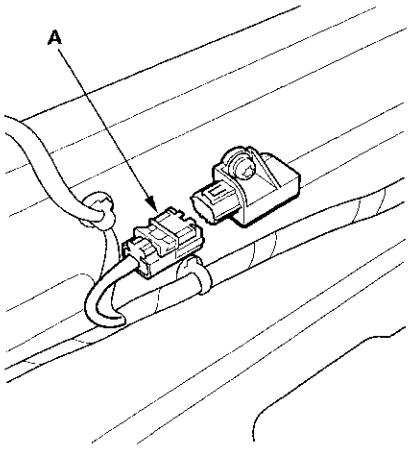

12. Measure the resistance between left side impact sensor (second) 2P connector terminals No. 1 and No. 2. There should be an open circuit or at least 1 MΩ.

LEFT SIDE IMPACT SENSOR (SECOND) 2P CONNECTOR

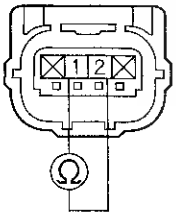

Terminal side of female terminals

Is the resistance as specified?

YES—Go to step 13.

NO—Short in the floor wire harness; replace the floor wire harness, then clear the DTC.■

13. Measure the resistance between body ground and left side impact sensor (second) 2P connector terminals No. 1 and No. 2, individually. There should be an open circuit or at least 1 MΩ.

LEFT SIDE IMPACT SENSOR (SECOND) 2P CONNECTOR

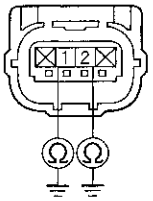

Terminal side of female terminals

Is the resistance as specified?

YES—Go to step 14.

NO—Short to ground in the floor wire harness; replace the floor wire harness, then clear the DTC.■

14. Reconnect the negative cable to the battery.

15. Turn the ignition switch to ON (II).

16. Measure the voltage between body ground and left side impact sensor (second) 2P connector terminals No. 1 and No. 2, individually. There should be less than 0.2 V.

LEFT SIDE IMPACT SENSOR (SECOND) 2P CONNECTOR

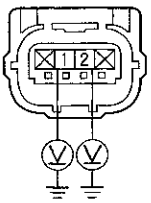

Terminal side of female terminals

Is the voltage as specified?

YES—Go to step 17.

NO—Short to power in the floor wire harness; replace the floor wire harness, then clear the DTC.■

(cont'd)

DTC Troubleshooting (cont'd)

17. Turn the ignition switch to LOCK (0).

18. Connect the SRS inflator simulator (jumper connector) and the red lead (A) of simulator lead L to the floor wire harness 4P connector (B).

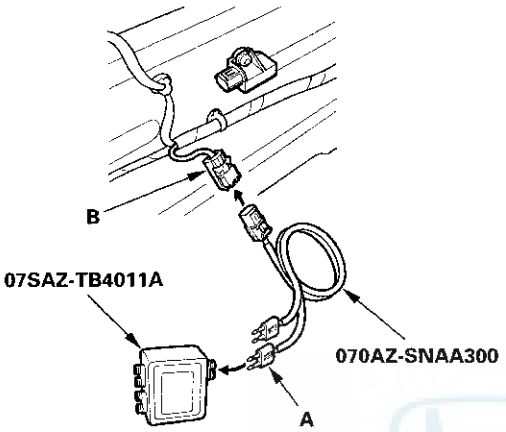

19. Measure the resistance between left side impact sensor (second) 2P connector terminals No. 1 and No. 2. There should be less than 1.0 Ω.

LEFT SIDE IMPACT SENSOR (SECOND) 2P CONNECTOR

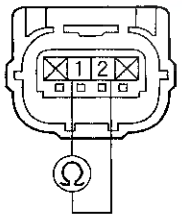

Terminal side of female terminals

Is the resistance as specified?

YES—Faulty rear safing sensor; replace the rear safing sensor (see page 24-202), then clear the DTC. If DTC 45-1x recurs, then replace the left side impact sensor (first) (see page 24-200), then clear the DTC.■

NO—Open in the floor wire harness; replace the floor wire harness, then clear the DTC.■

DTC 46-1x ("x" can be 0 thru 9 or A thru F): No Signal from the Right Side Impact Sensor (second)

Special Tools Required
- SRS inflator simulator 07SAZ-TB4011A
- SRS simulator lead L 070AZ-SNAA300

NOTE: Before doing this troubleshooting procedure, review SRS Precautions and Procedures (see page 24-13), General Troubleshooting Information (see page 24-22), and Battery Terminal Disconnection and Reconnection (see page 22-62).

1. Clear the DTC memory (see page 24-23).

2. Turn the ignition switch to ON (II), then wait for 10 seconds.

3. Read the DTC (see page 24-22).

   Is DTC 46-11 indicated?

   YES—Go to step 5.

   NO—Go to step 4.

4. Read the DTC.

   Is DTC 46-12 also indicated?

   YES—Faulty right side impact sensor (second); replace the right side impact sensor (second) (see page 24-201), then clear the DTC.■

   NO—Intermittent failure, system is OK at this time. Go to Troubleshooting Intermittent Failures (see page 24-24). If another DTC is indicated, troubleshoot the DTC.■

5. Turn the ignition switch to LOCK (0).

6. Disconnect the negative cable from the battery, then wait at least 3 minutes.

7. Disconnect the floor wire harness 2P connector (A) from the right side impact sensor (second).

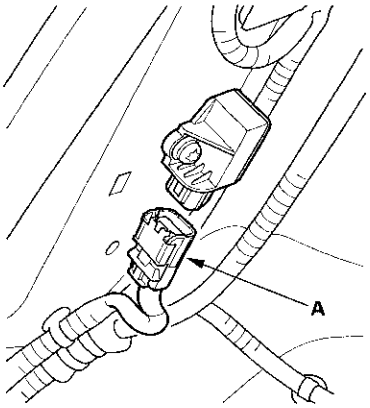

8. Disconnect the floor wire harness 4P connector (A) from the right side impact sensor (first).

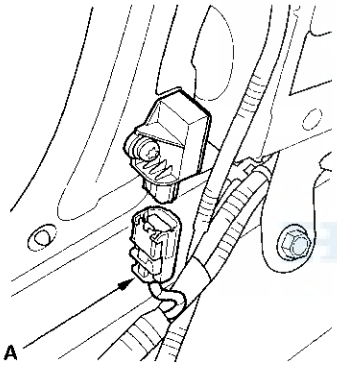

9. Measure the resistance between right side impact sensor (second) 2P connector terminals No. 1 and No. 2. There should be an open circuit or at least 1 MΩ.

RIGHT SIDE IMPACT SENSOR (SECOND) 2P CONNECTOR

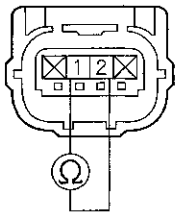

Terminal side of female terminals

Is the resistance as specified?

YES—Go to step 10.

NO—Short in the floor wire harness; replace the floor wire harness, then clear the DTC. ■

10. Measure the resistance between right side impact sensor (second) 2P connector terminals No. 1 and No. 2, individually. There should be an open circuit or at least 1 MΩ.

RIGHT SIDE IMPACT SENSOR (SECOND) 2P CONNECTOR

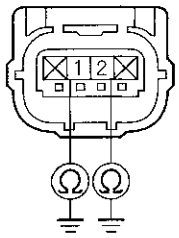

Terminal side of female terminals

Is the resistance as specified?

YES—Go to step 11.

NO—Short to ground in the floor wire harness; replace the floor wire harness, then clear the DTC. ■

(cont'd)

DTC Troubleshooting (cont'd)

11. Reconnect the negative cable to the battery.

12. Turn the ignition switch to ON (II).

13. Measure the voltage between body ground and right side impact sensor (second) 2P connector terminals No. 1 and No. 2, individually. There should be less than 0.2 V.

RIGHT SIDE IMPACT SENSOR (SECOND) 2P CONNECTOR

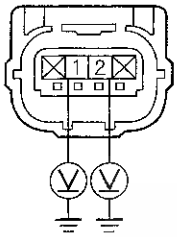

Terminal side of female terminals

Is the voltage as specified?

YES—Go to step 14.

NO—Short to power in the floor wire harness; replace the floor wire harness, then clear the DTC.■

14. Turn the ignition switch to LOCK (0).

15. Connect the SRS inflator simulator (jumper connector) and the red lead (A) of simulator lead L to the floor wire harness 4P connector (B).

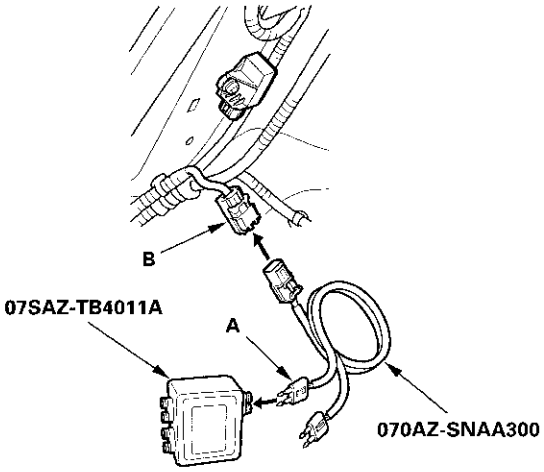

16. Measure the resistance between right side impact sensor (second) 2P connector terminals No. 1 and No. 2. There should be less than 1.0 Ω.

RIGHT SIDE IMPACT SENSOR (SECOND) 2P CONNECTOR

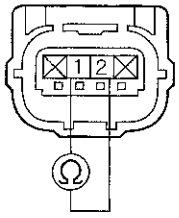

Terminal side of female terminals

Is the resistance as specified?

YES—Faulty right side impact sensor (second) or poor connection at right side impact sensor (second) 2P connector. Check the connection; if the connection is OK, replace the right side impact sensor (second) (see page 24-201), then clear the DTC.■

NO—Open in the floor wire harness; replace the floor wire harness, then clear the DTC.■

DTC 45-2x, 45-3x, 45-Bx ("x" can be 0 thru 9 or A thru F): Internal Failure of the Left Side Impact Sensor (second)

NOTE: Before doing this troubleshooting procedure, review SRS Precautions and Procedures (see page 24-13) and General Troubleshooting Information (see page 24-22).

1. Clear the DTC memory (see page 24-23).

2. Turn the ignition switch to ON (II), and check that the SRS indicator comes on for about 6 seconds and then goes off.

   Does the SRS indicator stay on, and is DTC 45-2x, 45-3x, or 45-Bx indicated?

   YES—Replace the left side impact sensor (second) (see page 24-201), then clear the DTC. If the DTC returns, replace the SRS unit (see page 24-199). ■

   NO—Intermittent failure, system is OK at this time. Go to Troubleshooting Intermittent Failures (see page 24-24). If another DTC is indicated, troubleshoot the DTC. ■

DTC 46-2x, 46-3x, 46-Bx ("x" can be 0 thru 9 or A thru F): Internal Failure of the Right Side Impact Sensor (second)

NOTE: Before doing this troubleshooting procedure, review SRS Precautions and Procedures (see page 24-13) and General Troubleshooting Information (see page 24-22).

1. Clear the DTC memory (see page 24-23).

2. Turn the ignition switch to ON (II), and check that the SRS indicator comes on for about 6 seconds and then goes off.

   Does the SRS indicator stay on, and is DTC 46-2x, 46-3x, or 46-Bx indicated?

   YES—Replace the right side impact sensor (second) (see page 24-201), then clear the DTC. If the DTC returns, replace the SRS unit (see page 24-199). ■

   NO—Intermittent failure, system is OK at this time. Go to Troubleshooting Intermittent Failures (see page 24-24). If another DTC is indicated, troubleshoot the DTC. ■

HONDA

DTC Troubleshooting (cont'd)

DTC 51-xx, 52-xx, 53-xx, 54-xx, 55-xx, ("x" can be 0 thru 9 or A thru F): Internal Failure of the SRS Unit

NOTE:
- Before doing this troubleshooting procedure, review SRS Precautions and Procedures (see page 24-13) and General Troubleshooting Information (see page 24-22).
- Before troubleshooting any of these DTCs, check the battery/system voltage and battery cable connections. If the voltage is low, repair the charging system or replace the battery before troubleshooting the SRS. If the battery/system voltage is now OK, ask the customer if the battery ever went dead or if the engine was started and run with the battery in a low state of change. A dead battery may trigger one or more of these DTCs.

1. Clear the DTC memory (see page 24-23).

2. Turn the ignition switch to ON (II), and check that the SRS indicator comes on for about 6 seconds and then goes off.

   Does the SRS indicator stay on, and is DTC 51-xx, 52-xx, 53-xx, 54-xx, or 55-xx indicated?

   YES—Replace the SRS unit (see page 24-199).■

   NO—Intermittent failure, system is OK at this time. Go to Troubleshooting Intermittent Failures (see page 24-24). If another DTC is indicated, troubleshoot the DTC.■

DTC Ex-11 ("x" can be 0 thru 9 or A thru F): Control Operation Recorded

NOTE: Before doing this troubleshooting procedure, review SRS Precautions and Procedures (see page 24-13) and General Troubleshooting Information (see page 24-22).

1. Clear the DTC memory (see page 24-23).

2. Turn the ignition switch to ON (II), then wait for 10 seconds.

3. Read the DTC (see page 24-22).

   Is DTC Ex-11 indicated?

   YES—Faulty SRS unit; replace the SRS unit (see page 24-199).■

   NO—Intermittent failure, the system is OK at this time. Go to Troubleshooting Intermittent Failures (see page 24-24). If another DTC is indicated, troubleshoot the DTC.■

DTC Fx-11 ("x" can be 0 thru 9 or A thru F): Airbags and/or Tensioners Deployment Recorded

NOTE:
- Before doing this troubleshooting procedure, review SRS Precautions and Procedures (see page 24-13) and General Troubleshooting Information (see page 24-22).
- Refer to the DTCs shown:
  - DTC F1-11: Driver's airbag and/or driver's seat belt tensioner deployed.
  - DTC F2-11: Front passenger's airbag and/or front passenger's seat belt tensioner deployed.
  - DTC F3-11: Driver's side airbag, left side curtain airbag, and/or driver's seat belt tensioner deployed.
  - DTC F4-11: Front passenger's side airbag, right side curtain airbag, and/or front seat belt tensioner deployed.

When any airbags or tensioners have deployed, go to Component Replacement/Inspection After Deployment (see page 24-181). ■

DTC 61-1x ("x" can be 0 thru 9 or A thru F): Open in the Driver's Seat Belt Buckle Switch

NOTE: Before doing this troubleshooting procedure, review SRS Precautions and Procedures (see page 24-13) and General Troubleshooting Information (see page 24-22).

1. Clear the DTC memory (see page 24-23).

2. Turn the ignition switch to ON (II), then buckle and unbuckle the driver's seat belt several times.

3. Read the DTC (see page 24-22).

   Is DTC 61-1x indicated?

   YES—Go to step 4.

   NO—Intermittent failure, system is OK at this time. Go to Troubleshooting Intermittent Failures (see page 24-24). If another DTC is indicated, troubleshoot the DTC. ■

4. Disconnect the floor wire harness 3P connector from the driver's seat belt buckle switch 3P connector (A).

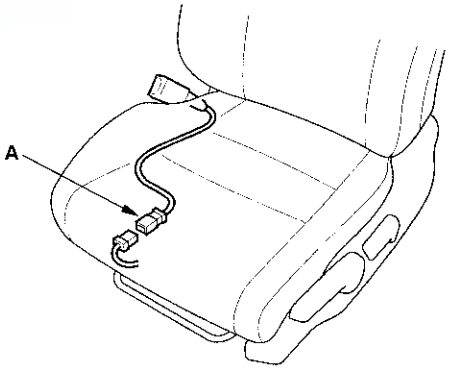

(cont'd)

DTC Troubleshooting (cont'd)

5. From the system selection menu on the HDS, select SRS, then select SRS again, then select PARAMETER INFORMATION, then Buckle Switch. Seat Position Sensor, and check the status on the HDS screen for FRONT LEFT SEAT BELT BUCKLE SWITCH when the seat belt is buckled, and unbuckled.

   - If UNBUCKLE, BUCKLE, or SHORT is indicated, replace the floor wire harness.
   - If OPEN is indicated, go to step 6.

6. Measure the resistance between floor wire harness 3P connector terminal No. 1 and body ground. There should be less than 1.0 Ω.

FLOOR WIRE HARNESS 3P CONNECTOR

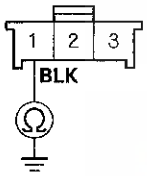

Wire side of female terminals

Is the resistance as specified?

YES—Go to step 7.

NO—Open in the floor wire harness or poor ground connection at G602 (see page 22-32). If G602 is OK, replace the floor wire harness, then clear the DTC.■

7. Alternately connect the terminals No. 2 and No. 3 of the floor wire harness 3P connector to body ground with a jumper wire, and check the status on the HDS screen.

Does the status alternate from UNBUCKLE to BUCKLE?

YES—Replace the driver's seat belt buckle assembly (see page 24-6), then clear the DTC.■

NO—Open in the floor wire harness; replace the floor wire harness, then clear the DTC.■

DTC 61-2x ("x" can be 0 thru 9 or A thru F): Short in the Driver's Seat Belt Buckle Switch

NOTE: Before doing this troubleshooting procedure, review SRS Precautions and Procedures (see page 24-13) and General Troubleshooting Information (see page 24-22).

1. Clear the DTC memory (see page 24-23).

2. Turn the ignition switch to ON (II), then buckle and unbuckle the driver's seat belt several times.

3. Read the DTC (see page 24-22).

   Is DTC 61-2x indicated?

   YES—Go to step 4.

   NO—Intermittent failure, system is OK at this time. Go to Troubleshooting Intermittent Failures (see page 24-24). If another DTC is indicated, troubleshoot the DTC.■

4. Turn the ignition switch to LOCK (0).

5. Disconnect the floor wire harness 3P connector from the driver's seat belt buckle switch 3P connector (A).

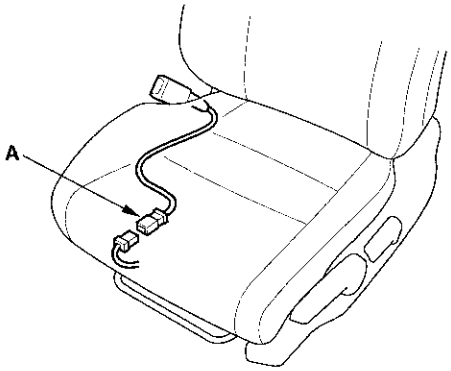

6. Turn the ignition switch to ON (II).

7. From the system selection menu on the HDS, select SRS, then select SRS again, then select PARAMETER INFORMATION, then Buckle Switch. Seat Position Sensor, and check the status on the HDS screen for FRONT LEFT SEAT BELT BUCKLE SWITCH.

   Is OPEN indicated on the HDS?

   YES—Replace the driver's seat belt buckle assembly (see page 24-6), then clear the DTC.■

   NO—Short to ground in the floor wire harness; replace the floor wire harness, then clear the DTC.■

DTC 62-1x ("x" can be 0 thru 9 or A thru F): Open in the Front Passenger's Seat Belt Buckle Switch

NOTE: Before doing this troubleshooting procedure, review SRS Precautions and Procedures (see page 24-13) and General Troubleshooting Information (see page 24-22).

1. Clear the DTC memory (see page 24-23).

2. Turn the ignition switch to ON (II), then buckle and unbuckle the driver's seat belt several times.

3. Read the DTC (see page 24-22).

   Is DTC 62-1x indicated?

   YES—Go to step 4.

   NO—Intermittent failure, system is OK at this time. Go to Troubleshooting Intermittent Failures (see page 24-24). If another DTC is indicated, troubleshoot the DTC.■

4. Disconnect the floor wire harness 3P connector from the driver's seat belt buckle switch 3P connector (A).

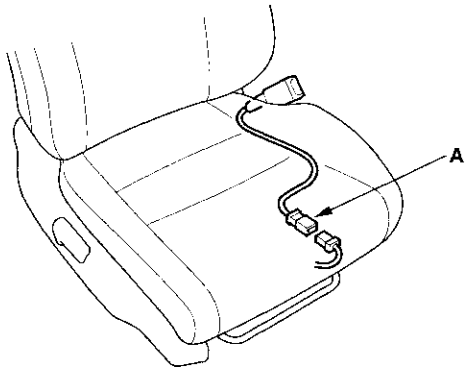

(cont'd)

DTC Troubleshooting (cont'd)

5. From the system selection menu on the HDS, select SRS, then select SRS again, then select PARAMETER INFORMATION, then Buckle Switch. Seat Position Sensor, and check the status on the HDS screen for FRONT RIGHT SEAT BELT BUCKLE SWITCH when the seat belt is buckled, and unbuckled.

   - If UNBUCKLE, BUCKLE, or SHORT is indicated, replace the floor wire harness.
   - If OPEN is indicated, go to step 6.

6. Measure the resistance between floor wire harness 3P connector terminal No. 1 and body ground. There should be less than 1.0 Ω.

FLOOR WIRE HARNESS 3P CONNECTOR

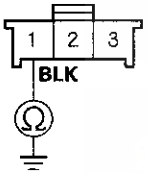

Wire side of female terminals

Is the resistance specified?

YES—Go to step 7.

NO—Open in the floor wire harness or poor ground connection at G602 (see page 22-32). If G602 is OK, replace the floor wire harness, then clear the DTC.■

7. Alternately connect the terminals No. 2 and No. 3 of the floor wire harness 3P connector to body ground with a jumper wire, and check the status on the HDS screen.

Does the status alternate from UNBUCKLE to BUCKLE?

YES—Replace the driver's seat belt buckle assembly (see page 24-6), then clear the DTC.■

NO—Open in the floor wire harness; replace the floor wire harness, then clear the DTC.■

DTC 62-2x ("x" can be 0 thru 9 or A thru F): Short in the Front Passenger's Seat Belt Buckle Switch

NOTE: Before doing this troubleshooting procedure, review SRS Precautions and Procedures (see page 24-13) and General Troubleshooting Information (see page 24-22).

1. Clear the DTC memory (see page 24-23).

2. Turn the ignition switch to ON (II), then buckle and unbuckle the driver's seat belt several times.

3. Read the DTC (see page 24-22).

   Is DTC 62-2x indicated?

   YES—Go to step 4.

   NO—Intermittent failure, system is OK at this time. Go to Troubleshooting Intermittent Failures (see page 24-24). If another DTC is indicated, troubleshoot the DTC.■

4. Turn the ignition switch to LOCK (0).

5. Disconnect the floor wire harness 3P connector from the driver's seat belt buckle switch 3P connector (A).

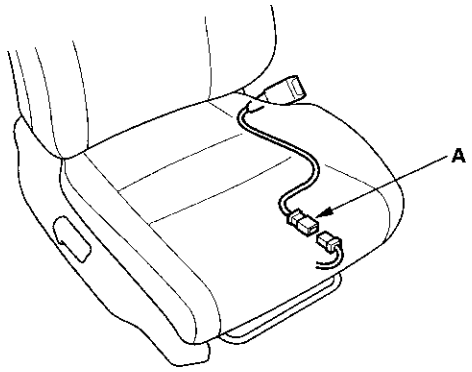

6. Turn the ignition switch to ON (II).

7. From the system selection menu on the HDS, select SRS, then select SRS again, then select PARAMETER INFORMATION, then Buckle Switch. Seat Position Sensor, and check the status on the HDS screen for FRONT RIGHT SEAT BELT BUCKLE SWITCH.

   Is OPEN indicated on the HDS?

   YES—Replace the front passenger's seat belt buckle assembly (see page 24-6), then clear the DTC.■

   NO—Short to ground in the floor wire harness; replace the floor wire harness, then clear the DTC.■

DTC 71-1x ("x" can be 0 thru 9 or A thru F): Open in the Driver's Seat Position Sensor

NOTE: Before doing this troubleshooting procedure, review SRS Precautions and Procedures (see page 24-13), General Troubleshooting Information (see page 24-22), and Battery Terminal Disconnection and Reconnection (see page 22-62).

1. Clear the DTC memory (see page 24-23).

2. Turn the ignition switch to ON (II), and check that the SRS indicator comes on for about 6 seconds and then goes off.

   Does the SRS indicator stay on, and is DTC 71-1x indicated?

   YES—Go to step 3.

   NO—Intermittent failure, system is OK at this time. Go to Troubleshooting Intermittent Failures (see page 24-24). If another DTC is indicated, troubleshoot the DTC.■

3. Check the connection between the seat position sensor harness 2P connector and the driver's seat position sensor (see page 24-11).

4. Clear the DTC memory.

5. Read the DTC (see page 24-22).

   Is DTC 71-1x indicated?

   YES—Go to step 6.

   NO—Intermittent failure, system is OK at this time. Go to Troubleshooting Intermittent Failures (see page 24-24). If another DTC is indicated, troubleshoot the DTC.■

6. Turn the ignition switch to LOCK (0). Disconnect the negative cable from the battery, then wait at least 3 minutes.

(cont'd)

DTC Troubleshooting (cont'd)

7. Disconnect the driver's seat wire harness 2P connector (A) from the driver's seat position sensor.

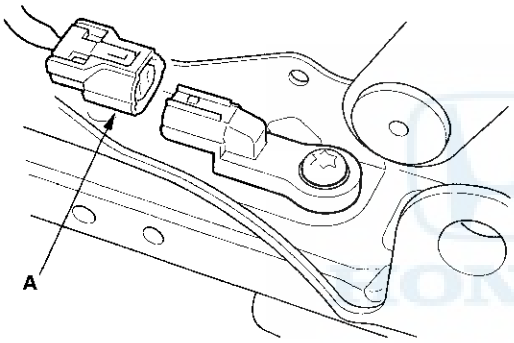

8. Connect the driver's seat wire harness 2P connector terminals No. 1 and No. 2 with a jumper wire.

9. Disconnect both seat belt tensioner 4P connectors (see step 7 on page 24-21) and both seat belt buckle tensioner 4P connectors (see step 8 on page 24-21).

10. Disconnect SRS unit connector B (28P) from the SRS unit (see step 9 on page 24-21).

11. Measure the resistance between SRS unit connector B (28P) terminals No. 5 and No. 6. There should be less than 1.0 Ω.

SRS UNIT CONNECTOR B (28P)

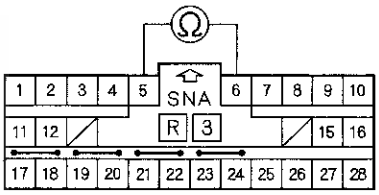

Wire side of female terminals

Is the resistance as specified?

YES—Faulty driver's seat position sensor or SRS unit; replace the driver's seat position sensor (see page 24-207), then clear the DTC. If the problem is still present, replace the SRS unit (see page 24-199).■

NO—Open in the floor wire harness, driver's seat wire harness (with seat heater), or the seat position sensor harness; replace the faulty harness, then clear the DTC.■

DTC 71-2x ("x" can be 0 thru 9 or A thru F): Short in the Driver's Seat Position Sensor

NOTE: Before doing this troubleshooting procedure, review SRS Precautions and Procedures (see page 24-13), General Troubleshooting Information (see page 24-22), and Battery Terminal Disconnection and Reconnection (see page 22-62).

1. Clear the DTC memory (see page 24-23).

2. Turn the ignition switch to ON (II), and check that the SRS indicator comes on for about 6 seconds and then goes off.

   Does the SRS indicator stay on, and is DTC 71-2x indicated?

   YES—Go to step 3.

   NO—Intermittent failure, system is OK at this time. Go to Troubleshooting Intermittent Failures (see page 24-24). If another DTC is indicated, troubleshoot the DTC. ■

3. Turn the ignition switch to LOCK (0). Disconnect the negative cable from the battery, then wait at least 3 minutes.

4. Disconnect the driver's seat wire harness 2P connector (A) from the driver's seat position sensor (see page 24-11).

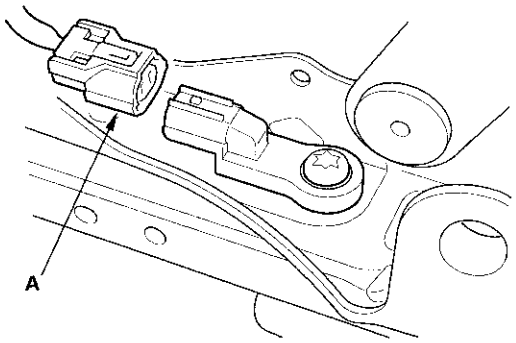

5. Reconnect the negative cable to the battery.

6. Clear the DTC memory.

7. Read the DTC (see page 24-22).

   Is DTC 71-2x indicated?

   YES—Go to step 8.

   NO—Faulty driver's seat position sensor; replace the driver's seat position sensor (see page 24-207), then clear the DTC. ■

8. Turn the ignition switch to LOCK (0). Disconnect the negative cable from the battery, then wait at least 3 minutes.

9. Disconnect both seat belt tensioner 4P connectors (see step 7 on page 24-21) and both seat belt buckle tensioner 4P connectors (see step 8 on page 24-21).

10. Disconnect SRS unit connector B (28P) from the SRS unit (see step 9 on page 24-21).

(cont'd)

DTC Troubleshooting (cont'd)

11. Measure the resistance between SRS unit connector B (28P) terminals No. 5 and No. 6. There should be an open circuit or at least 1 MΩ.

SRS UNIT CONNECTOR B (28P)

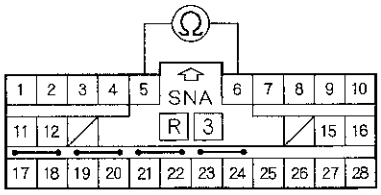

Wire side of female terminals

Is the resistance as specified?

YES—Go to step 12.

NO—Short in the floor wire harness, driver's seat wire harness (with seat heater), or the seat position sensor harness; replace the faulty harness, then clear the DTC.■

12. Measure the resistance between body ground and SRS unit connector B (28P) terminals No. 5 and No. 6, individually. There should be an open circuit or at least 1 MΩ.

SRS UNIT CONNECTOR B (28P)

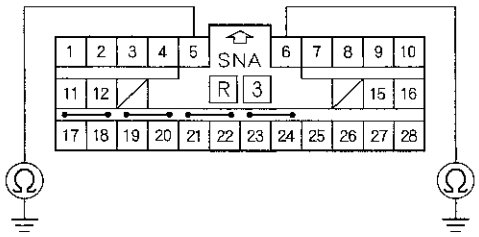

Wire side of female terminals

Is the resistance as specified?

YES—Faulty driver's seat position sensor, or the SRS unit; replace the driver's seat position sensor (see page 24-207), then clear the DTC. If the problem is still present, replace the SRS unit (see page 24-199).■

NO—Short in the floor wire harness, driver's seat wire harness (with seat heater), or the seat position sensor harness; replace the faulty harness, then clear the DTC.■

DTC 81-61, 85-61: No Signal from the ODS Unit

DTC 81-62, 85-62: Non-stipulated Data from the ODS Unit

NOTE: Before doing this troubleshooting procedure, review SRS Precautions and Procedures (see page 24-13), General Troubleshooting Information (see page 24-22), and Battery Terminal Disconnection and Reconnection (see page 22-62).

1. Make sure nothing is on the front passenger's seat.

2. Clear the DTC memory (see page 24-23).

3. Read the DTC (see page 24-22).

   Is DTC 81-61, 85-61, 81-62, or 85-62 indicated?

   YES—Go to step 4.

   NO—Intermittent failure, system is OK at this time. Go to Troubleshooting Intermittent Failures (see page 24-24). If another DTC is indicated, troubleshoot the DTC.■

4. Check the connection between the ODS unit harness 18P connector and the ODS unit.

   Is the connection OK?

   YES—Go to step 6.

   NO—Repair the poor connection and retest. If DTC 85-61 or 85-62 is still present, go to step 5.

5. Turn the ignition switch to LOCK (0).

6. Check the No. 9 (7.5 A) fuse in the under-dash fuse/relay box.

   Is the fuse OK?

   YES—Go to step 7.

   NO—Replace the fuse, then turn the ignition switch to ON (II). If the fuse blows again, check for a short in the No. 9 (7.5 A) fuse circuit (floor wire harness, front passenger's seat wire harness (with seat heater), or ODS unit harness).■

7. Disconnect the ODS unit harness 18P connector (A) from the ODS unit.

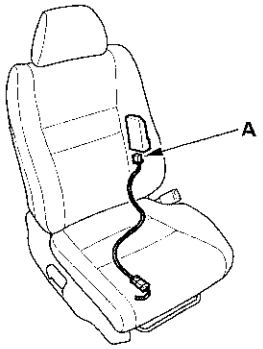

8. Turn the ignition switch to ON (II).

9. Measure the voltage between ODS unit harness 18P connector terminal No. 1 and body ground. There should be battery voltage.

ODS UNIT HARNESS 18P CONNECTOR

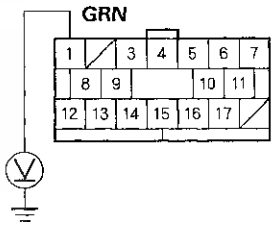

Wire side of female terminals

Is there battery voltage?

YES—Go to step 10.

NO—Open in the floor wire harness, front passenger's seat wire harness (with seat heater), or ODS unit harness; replace the faulty harness, then clear the DTC.■

(cont'd)

DTC Troubleshooting (cont'd)

10. Turn the ignition switch to LOCK (0).

11. Measure the resistance between ODS unit harness 18P connector terminal No. 12 and body ground. There should be less than 1.0 Ω.

ODS UNIT HARNESS 18P CONNECTOR

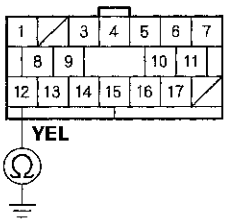

Wire side of female terminals

Is the resistance as specified?

YES—Go to step 12.

NO—Open in the ODS unit harness, front passenger's seat wire harness (with seat heater), or floor wire harness; replace the faulty harness, then clear the DTC. ■

12. Turn the ignition switch to LOCK (0). Disconnect the negative cable from the battery, then wait at least 3 minutes.

13. Disconnect SRS unit connector A (28P) from the SRS unit (see step 9 on page 24-21).

14. Measure the resistance between SRS unit connector A (28P) terminal No. 14 and body ground. There should be an open circuit or at least 1 MΩ.

SRS UNIT CONNECTOR A (28P)

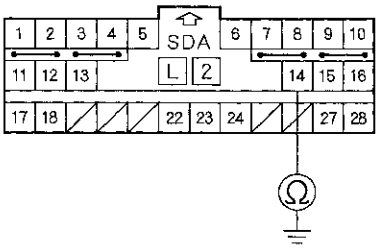

Wire side of female terminals

Is the resistance as specified?

YES—Go to step 15.

NO—Short to ground in the dashboard wire harness, front passenger's seat wire harness (with seat heater), ODS unit harness, or floor wire harness; replace the faulty harness, then clear the DTC. ■

15. Turn the ignition switch to ON (II), and measure the voltage between SRS unit connector A (28P) terminal No. 14 and body ground. There should be less than 0.2 V.

SRS UNIT CONNECTOR A (28P)

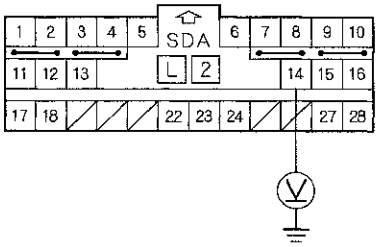

Wire side of female terminals

Is the voltage as specified?

YES—Go to step 16.

NO—Short to power in the dashboard wire harness, floor wire harness, front passenger's seat wire harness (with seat heater), or ODS unit harness; replace the faulty harness, then clear the DTC. ■

16. Measure the resistance between SRS unit connector A (28P) terminal No. 14 and ODS unit harness 18P connector terminal No. 7. There should be less than 1.0 Ω.

ODS UNIT HARNESS 18P CONNECTOR

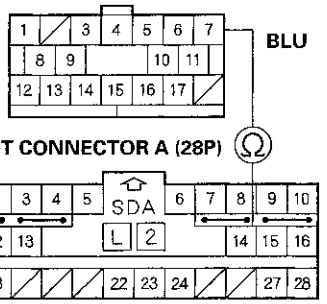

Wire side of female terminals

Is the resistance as specified?

YES—Faulty ODS unit or SRS unit; replace the ODS unit (see page 24-205), then clear the DTC. If the problem is still present, replace the SRS unit (see page 24-199). ■

NO—Open in the dashboard wire harness, floor wire harness, front passenger's seat wire harness (with seat heater), or ODS unit harness; replace the faulty harness, then clear the DTC. ■

DTC Troubleshooting (cont'd)

DTC 81-4x, 81-5x ("x" can be 0 thru 9 or A thru F), 81-63, 81-64: Internal Failure of the ODS Unit

NOTE: Before doing this troubleshooting procedure, review SRS Precautions and Procedures (see page 24-13) and General Troubleshooting Information (see page 24-22).

1. Clear the DTC memory (see page 24-23).

2. Turn the ignition switch to ON (II), and check that the SRS indicator comes on for about 6 seconds and then goes off.

   Does the SRS indicator stay on, and is DTC 81-4x, 81-5x, 81-63, or 81-64 indicated?

   YES—Go to step 3.

   NO—Intermittent failure, system is OK at this time. Go to Troubleshooting Intermittent Failures (see page 24-24). If another DTC is indicated, troubleshoot the DTC.■

3. Initialize the ODS unit (see page 24-26).

4. Turn the ignition switch to ON (II), and check that the SRS indicator comes on for about 6 seconds and then goes off.

   Does the SRS indicator go off?

   YES—The system is OK at this time.

   NO—Go to step 5.

5. Replace the ODS unit (see page 24-205), then clear the DTC.■

6. Turn the ignition switch to ON (II), and check that the SRS indicator comes on for about 6 seconds and then goes off.

   Does the SRS indicator go off?

   YES—The system is OK at this time.■

   NO—Replace the SRS unit (see page 24-199).■

DTC 81-71, 81-78: ODS Unit Does Not Calibrate

NOTE: Before doing this troubleshooting procedure, review SRS Precautions and Procedures (see page 24-13) and General Troubleshooting Information (see page 24-22).

1. Clear the DTC memory (see page 24-23).

2. Turn the ignition switch to ON (II), and check that the SRS indicator comes on for about 6 seconds and then goes off.

   Does the SRS indicator stay on, and is DTC 81-71 or 81-78 indicated?

   YES—Go to step 3.

   NO—Intermittent failure, system is OK at this time. Go to Troubleshooting Intermittent Failures (see page 24-24). If another DTC is indicated, troubleshoot the DTC.■

3. Calibrate the ODS unit (see page 24-27).

4. Turn the ignition switch to ON (II), and check that the SRS indicator comes on for about 6 seconds and then goes off.

   Does the SRS indicator go off?

   YES—The system is OK.■

   NO—Go to step 5.

5. Replace the ODS unit (see page 24-205), then clear the DTC.■

6. Turn the ignition switch to ON (II), and check that the SRS indicator comes on for about 6 seconds and then goes off.

   Does the SRS indicator go off?

   YES—The system is OK.■

   NO—Replace the SRS unit (see page 24-199).■

DTC 81-79: Front Passenger's Weight Sensors Initial Check Failure

NOTE: Before doing this troubleshooting procedure, review SRS Precautions and Procedures (see page 24-13) and General Troubleshooting Information (see page 24-22).

1. Clear the DTC memory (see page 24-23).

2. Turn the ignition switch to ON (II), and check that the SRS indicator comes on for about 6 seconds and then goes off.

   Does the SRS indicator stay on, and is DTC 81-79 indicated?

   YES—Go to step 3.

   NO—Intermittent failure, the system is OK at this time. Go to Troubleshooting Intermittent Failures (see page 24-24). If another DTC is indicated, troubleshoot the DTC.■

3. Turn the ignition switch to LOCK (0).

4. Make sure nothing is on the front passenger's seat.

5. Turn the ignition switch to ON (II), and check that the SRS indicator comes on for about 6 seconds and then goes off.

   Does the SRS indicator go off?

   YES—Remove the front passenger's seat assembly (see page 20-105), then reinstall it, calibrate the ODS unit (see page 24-27). Retry the troubleshooting. If the problem is still present, replace the ODS unit (see page 24-205), then clear the DTC.■

   NO—Intermittent failure, the system is OK at this time. Go to Troubleshooting Intermittent Failures (see page 24-24). If another DTC is indicated, troubleshoot the DTC.■

DTC 82-14: No Signal from the Front Passenger's Weight Sensor (front inner side)

NOTE: Before doing this troubleshooting procedure, review SRS Precautions and Procedures (see page 24-13) and General Troubleshooting Information (see page 24-22).

1. Clear the DTC memory (see page 24-23).

2. Read the DTC (see page 24-22).

   Is DTC 82-14 indicated?

   YES—Go to step 3.

   NO—Intermittent failure, system is OK at this time. Go to Troubleshooting Intermittent Failures (see page 24-24).■

3. From the INSPECTION menu on the HDS, select SWS DTC CHECK.

   Is another DTC also indicated?

   YES—
   - DTC 14-11: Open in the ODS unit harness; replace the ODS unit harness, then clear the DTC.■
   - DTC 14-12: Go to step 4.
   - DTC 14-13: Go to step 11.
   - DTC 14-14: Go to step 19.

   NO—Intermittent failure, system is OK at this time. Go to Troubleshooting Intermittent Failures (see page 24-24).■

4. Turn the ignition switch to LOCK (0).

5. Disconnect the ODS unit harness 3P connector (A) from the front passenger's weight sensor (front inner side).

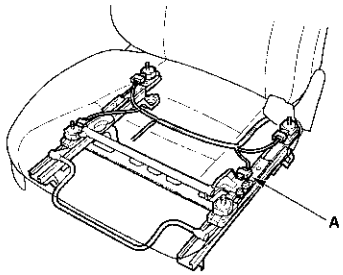

(cont'd)

DTC Troubleshooting (cont'd)

6. Read the DTC.

   Is DTC 14-12 indicated?

   YES—Go to step 7.

   NO—Faulty front passenger's weight sensor (front inner side); replace the front passenger's seat slide assembly including all four front passenger's weight sensors (see page 24-203), then clear the DTC. ■

7. Turn the ignition switch to LOCK (0).

8. Disconnect the ODS unit harness 18P connector (A) from the ODS unit.

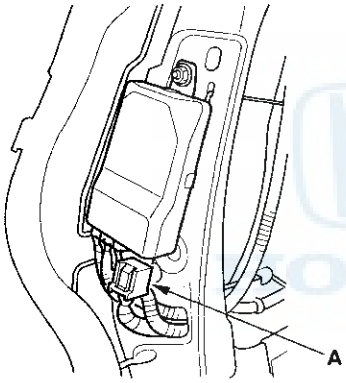

9. Measure the resistance between ODS unit harness 18P connector terminal No. 3 and body ground. There should be an open circuit or at least 1 MΩ.

ODS UNIT HARNESS 18P CONNECTOR

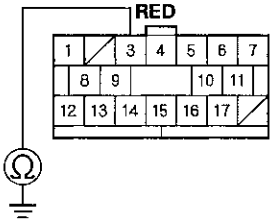

Wire side of female terminals

Is the resistance as specified?

YES—Go to step 10.

NO—Short to ground in the ODS unit harness; replace the ODS unit harness, then clear the DTC. ■

10. Measure the resistance between ODS unit harness 18P connector terminals No. 3 and No. 13. There should be an open circuit or at least 1 MΩ.

ODS UNIT HARNESS 18P CONNECTOR

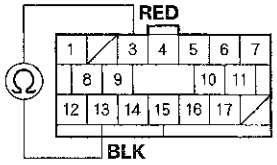

Wire side of female terminals

Is the resistance as specified?

YES—Faulty ODS unit; replace the ODS unit (see page 24-205), then clear the DTC. ■

NO—Short in the ODS unit harness; replace the ODS unit harness, then clear the DTC. ■

11. Turn the ignition switch to LOCK (0).

12. Swap the connections between the front passenger's weight sensor (front inner side) and the front passenger's weight sensor (rear inner side).

13. Read the DTC.

Is DTC 14-13 indicated?

YES—Go to step 14.

NO—Faulty front passenger's weight sensor (front outer side); replace the front passenger's seat slide assembly including all four front passenger's weight sensors (see page 24-203), then clear the DTC. ■

14. Turn the ignition switch to LOCK (0).

15. Disconnect the front passenger's weight sensor (front inner side) connector (A) and front passenger's weight sensor (rear inner side) connector (B).

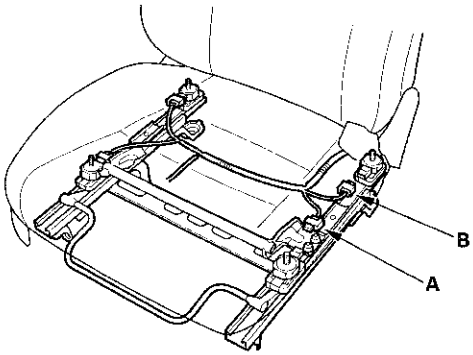

16. Disconnect the ODS unit harness 18P connector (A) from the ODS unit.

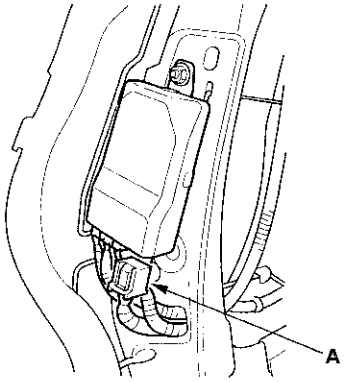

(cont'd)

DTC Troubleshooting (cont'd)

17. Turn the ignition switch to ON (II).

18. Measure the voltage between ODS unit harness 18P connector terminal No. 8 and body ground. There should be less than 0.2 V.

ODS UNIT HARNESS 18P CONNECTOR

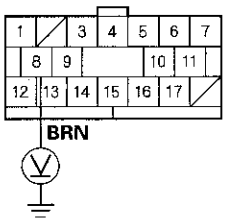

Wire side of female terminals

Is the voltage as specified?

YES—Faulty ODS unit; replace the ODS unit (see page 24-205), then clear the DTC. ■

NO—Short to power in the ODS unit harness; replace the ODS unit harness, then clear the DTC. ■

19. Turn the ignition switch to LOCK (0).

20. Disconnect the ODS unit harness 3P connector (A) from the front passenger's weight sensor (front inner side).

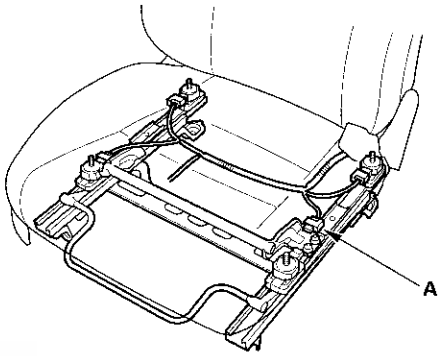

21. Read the DTC.

Is DTC 14-14 indicated?

YES—Go to step 22.

NO—Faulty front passenger's weight sensor (front inner side); replace the front passenger's seat slide assembly including all four front passenger's weight sensors (see page 24-203), then clear the DTC. ■

22. Turn the ignition switch to LOCK (0).

23. Disconnect the ODS unit harness 18P connector (A) from the ODS unit.

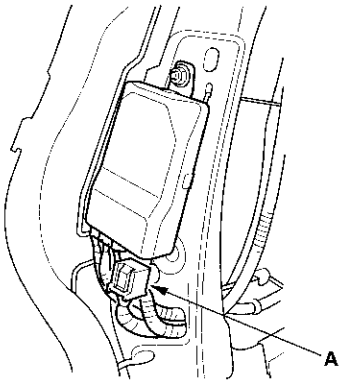

24. Measure the resistance between ODS unit harness 18P connector terminal No. 8 and body ground. There should be an open circuit or at least 1 MΩ.

ODS UNIT HARNESS 18P CONNECTOR

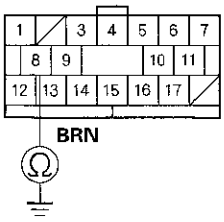

Wire side of female terminals

Is the resistance as specified?

YES—Go to step 25.

NO—Short to ground in the ODS unit harness; replace the ODS unit harness, then clear the DTC. ■

25. Measure the resistance between ODS unit harness 18P connector terminals No. 8 and No. 13. There should be an open circuit or at least 1 MΩ.

ODS UNIT HARNESS 18P CONNECTOR

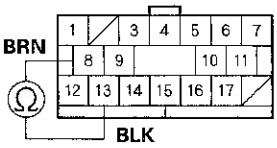

Wire side of female terminals

Is the resistance as specified?

YES—Faulty ODS unit; replace the ODS unit (see page 24-205), then clear the DTC. ■

NO—Short in the ODS unit harness; replace the ODS unit harness, then clear the DTC. ■

DTC 82-15: Internal Failure of the Front Passenger's Weight Sensor (front inner side)

DTC 82-17: Internal Failure of the Front Passenger's Weight Sensor (rear inner side)

DTC 83-25: Internal Failure of the Front Passenger's Weight Sensor (front outer side)

DTC 83-27: Internal Failure of the Front Passenger's Weight Sensor (rear outer side)

NOTE: Before doing this troubleshooting procedure, review SRS Precautions and Procedures (see page 24-13) and General Troubleshooting Information (see page 24-22).

1. Clear the DTC memory (see page 24-23).

2. Read the DTC (see page 24-22).

Is DTC82-15, 82-17, 83-25, or 83-27 indicated?

YES—Faulty front passenger's weight sensor; replace the front passenger's seat frame including all four front passenger's weight sensors (see page 24-203), then clear the DTC. ■

NO—Intermittent failure, the system is OK at this time. Go to Troubleshooting Intermittent Failures (see page 24-24). ■

DTC Troubleshooting (cont'd)

DTC 82-16: No Signal from the Front Passenger's Weight Sensor (rear inner side)

NOTE: Before doing this troubleshooting procedure, review SRS Precautions and Procedures (see page 24-13) and General Troubleshooting Information (see page 24-22).

1. Clear the DTC memory (see page 24-23).

2. Read the DTC (see page 24-22).

   Is DTC 82-16 indicated?

   YES—Go to step 3.

   NO—Intermittent failure, system is OK at this time. Go to Troubleshooting Intermittent Failures (see page 24-24).■

3. From the INSPECTION menu on the HDS, select SWS DTC CHECK.

   Is another DTC also indicated?

   YES—
   - DTC 16-11: Open in the ODS unit harness; replace the ODS unit harness, then clear the DTC.■
   - DTC 16-12: Go to step 4.
   - DTC 16-13: Go to step 11.
   - DTC 16-14: Go to step 19.

   NO—Intermittent failure, system is OK at this time. Go to Troubleshooting Intermittent Failures (see page 24-24).■

4. Turn the ignition switch to LOCK (0).

5. Disconnect the ODS unit harness 3P connector (A) from the front passenger's weight sensor (rear inner side).

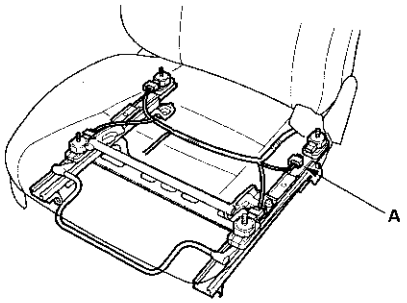

6. Read the DTC.

   Is DTC 16-12 indicated?

   YES—Go to step 7.

   NO—Faulty front passenger's weight sensor (rear inner side); replace the front passenger's seat slide assembly including all four front passenger's weight sensors (see page 24-203), then clear the DTC.■

7. Turn the ignition switch to LOCK (0).

8. Disconnect the ODS unit harness 18P connector (A) from the ODS unit.

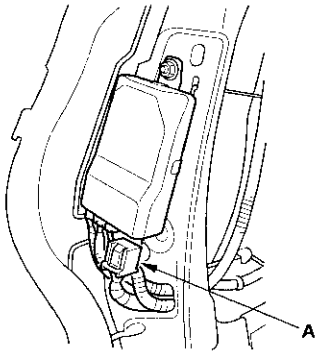

9. Measure the resistance between ODS unit harness 18P connector terminal No. 4 and body ground. There should be an open circuit or at least 1 MΩ.

ODS UNIT HARNESS 18P CONNECTOR

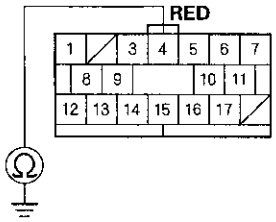

Wire side of female terminals

Is the resistance as specified?

YES—Go to step 10.

NO—Short to ground in the ODS unit harness; replace the ODS unit harness, then clear the DTC.■

10. Measure the resistance between ODS unit harness 18P connector terminals No. 4 and No. 14. There should be an open circuit or at least 1 MΩ.

ODS UNIT HARNESS 18P CONNECTOR

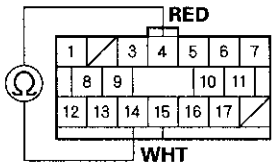

Wire side of female terminals

Is the resistance as specified?

YES—Faulty ODS unit; replace the ODS unit (see page 24-205), then clear the DTC.■

NO—Short in the ODS unit harness; replace the ODS unit harness, then clear the DTC.■

11. Turn the ignition switch to LOCK (0).

12. Swap the connections between the front passenger's weight sensor (rear inner side) and the front passenger's weight sensor (front inner side).

13. Read the DTC.

Is DTC 16-13 indicated?

YES—Go to step 14.

NO—Faulty front passenger's weight sensor (rear inner side); replace the front passenger's seat slide assembly including all four front passenger's weight sensors (see page 24-203), then clear the DTC.■

14. Turn the ignition switch to LOCK (0).

15. Disconnect the front passenger's weight sensor (rear inner side) connector (A) and front passenger's weight sensor (front inner side) connector (B).

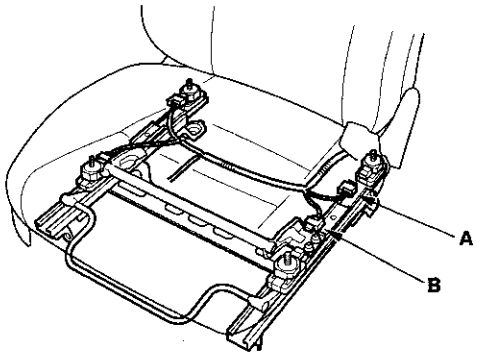

(cont'd)

DTC Troubleshooting (cont'd)

16. Disconnect the ODS unit harness 18P connector (A) from the ODS unit.

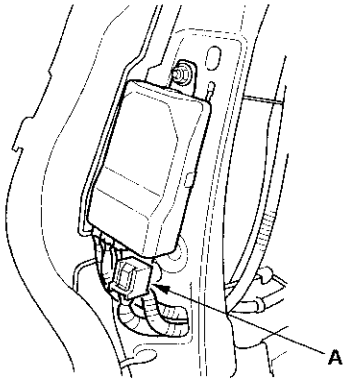

17. Turn the ignition switch to ON (II).

18. Measure the voltage between ODS unit harness 18P connector terminal No. 9 and body ground. There should be less than 0.2 V.

ODS UNIT HARNESS 18P CONNECTOR

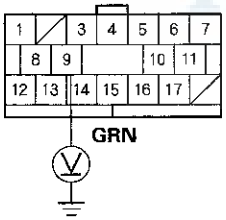

Wire side of female terminals

Is the voltage as specified?

YES—Faulty ODS unit; replace the ODS unit (see page 24-205), then clear the DTC.■

NO—Short to power in the ODS unit harness; replace the ODS unit harness, then clear the DTC.■

19. Turn the ignition switch to LOCK (0).

20. Disconnect the ODS unit harness 3P connector (A) from the front passenger's weight sensor (rear inner side).

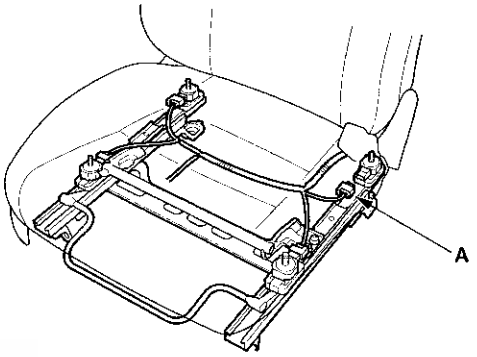

21. Read the DTC.

Is DTC 16-14 indicated?

YES—Go to step 22.

NO—Faulty front passenger's weight sensor (rear inner side); replace the front passenger's seat slide assembly including all four front passenger's weight sensors (see page 24-203), then clear the DTC.■

22. Turn the ignition switch to LOCK (0).

23. Disconnect the ODS unit harness 18P connector (A) from the ODS unit.

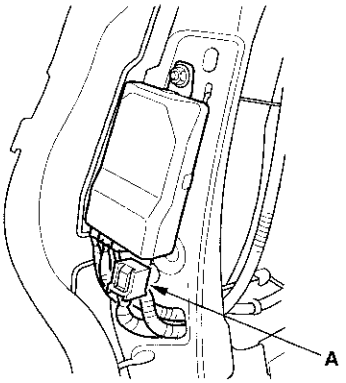

24. Measure the resistance between ODS unit harness 18P connector terminal No. 9 and body ground. There should be an open circuit or at least 1 MΩ.

ODS UNIT HARNESS 18P CONNECTOR

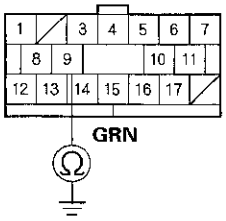

Wire side of female terminals

Is the resistance as specified?

YES—Go to step 25.

NO—Short to ground in the ODS unit harness; replace the ODS unit harness, then clear the DTC. ■

25. Measure the resistance between ODS unit harness 18P connector terminals No. 9 and No. 14. There should be an open circuit or at least 1 MΩ.

ODS UNIT HARNESS 18P CONNECTOR

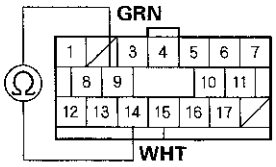

Wire side of female terminals

Is the resistance as specified?

YES—Faulty ODS unit; replace the ODS unit (see page 24-205), then clear the DTC. ■

NO—Short in the ODS unit harness; replace the ODS unit harness, then clear the DTC. ■

DTC 83-24: No Signal from the Front Passenger's Weight Sensor (front outer side)

NOTE: Before doing this troubleshooting procedure, review SRS Precautions and Procedures (see page 24-13) and General Troubleshooting Information (see page 24-22).

1. Clear the DTC memory (see page 24-23).

2. Read the DTC (see page 24-22).

   Is DTC 83-24 indicated?

   YES—Go to step 3.

   NO—Intermittent failure, system is OK at this time. Go to Troubleshooting Intermittent Failures (see page 24-24). ■

3. From the INSPECTION menu on the HDS, select SWS DTC CHECK.

   Is another DTC also indicated?

   YES—
   - DTC 24-11: Open in the ODS unit harness; replace the ODS unit harness, then clear the DTC. ■
   - DTC 24-12: Go to step 4.
   - DTC 24-13: Go to step 11.
   - DTC 24-14: Go to step 19.

   NO—Intermittent failure, system is OK at this time. Go to Troubleshooting Intermittent Failures (see page 24-24). ■

4. Turn the ignition switch to LOCK (0).

5. Disconnect the ODS unit harness 3P connector (A) from the front passenger's weight sensor (front outer side).

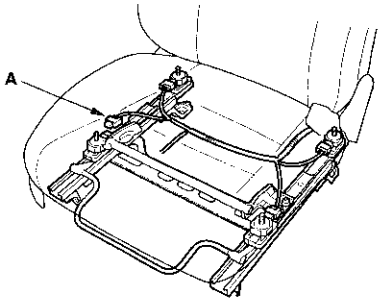

(cont'd)

DTC Troubleshooting (cont'd)

6. Read the DTC.

   Is DTC 24-12 indicated?

   YES—Go to step 7.

   NO—Faulty front passenger's weight sensor (front outer side); replace the front passenger's seat slide assembly including all four front passenger's weight sensors (see page 24-203), then clear the DTC. ■

7. Turn the ignition switch to LOCK (0).

8. Disconnect the ODS unit harness 18P connector (A) from the ODS unit.

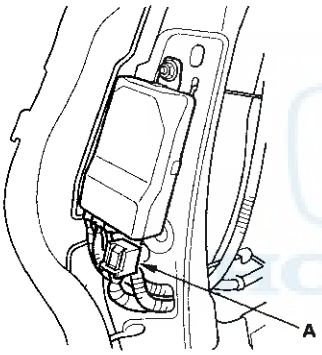

9. Measure the resistance between ODS unit harness 18P connector terminal No. 5 and body ground. There should be an open circuit or at least 1 MΩ.

ODS UNIT HARNESS 18P CONNECTOR

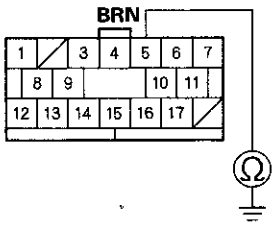

Wire side of female terminals

Is the resistance as specified?

YES—Go to step 10.

NO—Short to ground in the ODS unit harness; replace the ODS unit harness, then clear the DTC. ■

10. Measure the resistance between ODS unit harness 18P connector terminals No. 5 and No. 15. There should be an open circuit or at least 1 MΩ.

ODS UNIT HARNESS 18P CONNECTOR

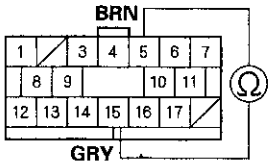

Wire side of female terminals

Is the resistance as specified?

YES—Faulty ODS unit; replace the ODS unit (see page 24-205), then clear the DTC. ■

NO—Short in the ODS unit harness; replace the ODS unit harness, then clear the DTC. ■

11. Turn the ignition switch to LOCK (0).

12. Swap the connections between the front passenger's weight sensor (front outer side) and the front passenger's weight sensor (rear outer side).

13. Read the DTC.

    Is DTC 24-13 indicated?

    YES—Go to step 14.

    NO—Faulty front passenger's weight sensor (front outer side); replace the front passenger's seat slide assembly including all four front passenger's weight sensors (see page 24-203), then clear the DTC. ■

14. Turn the ignition switch to LOCK (0).

15. Disconnect the front passenger's weight sensor (front outer side) connector (A) and front passenger's weight sensor (rear outer side) connector (B).

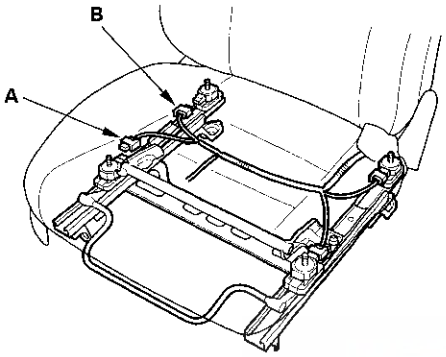

16. Disconnect the ODS unit harness 18P connector (A) from the ODS unit.

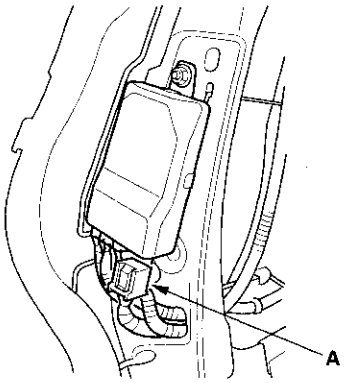

17. Turn the ignition switch to ON (II).

18. Measure the voltage between ODS unit harness 18P connector terminal No. 10 and body ground. There should be less than 0.2 V.

ODS UNIT HARNESS 18P CONNECTOR

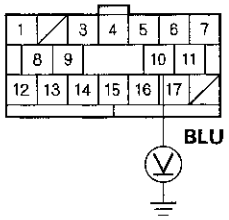

Wire side of female terminals

Is the voltage as specified?

YES—Faulty ODS unit; replace the ODS unit (see page 24-205), then clear the DTC.■

NO—Short to power in the ODS unit harness; replace the ODS unit harness, then clear the DTC.■

(cont'd)

DTC Troubleshooting (cont'd)

19. Turn the ignition switch to LOCK (0).

20. Disconnect the ODS unit harness 3P connector (A) from the front passenger's weight sensor (front outer side).

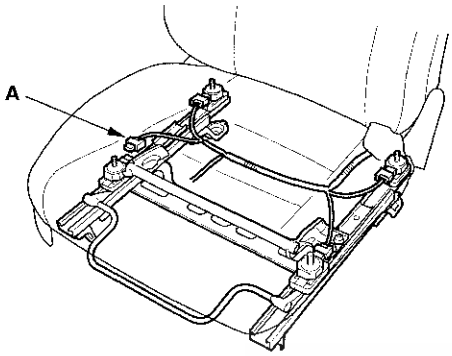

21. Read the DTC.

    Is DTC 24-14 indicated?

    YES—Go to step 22.

    NO—Faulty front passenger's weight sensor (front outer side); replace the front passenger's seat slide assembly including all four front passenger's weight sensors (see page 24-203), then clear the DTC.■

22. Turn the ignition switch to LOCK (0).

23. Disconnect the ODS unit harness 18P connector (A) from the ODS unit.

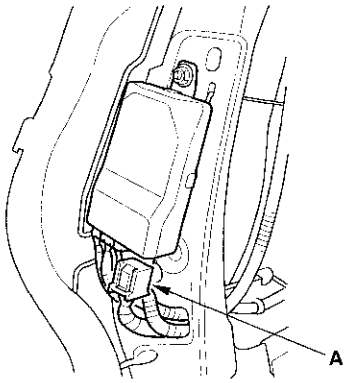

24. Measure the resistance between ODS unit harness 18P connector terminal No. 10 and body ground. There should be an open circuit or at least 1 MΩ.

ODS UNIT HARNESS 18P CONNECTOR

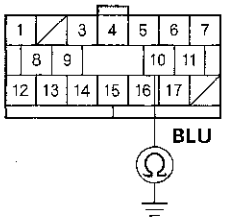

Wire side of female terminals

Is the resistance as specified?

YES—Go to step 25.

NO—Short to ground in the ODS unit harness; replace the ODS unit harness, then clear the DTC.■

25. Measure the resistance between ODS unit harness 18P connector terminals No. 10 and No. 15. There should be an open circuit or at least 1 MΩ.

ODS UNIT HARNESS 18P CONNECTOR

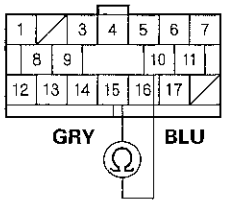

Wire side of female terminals

Is the resistance as specified?

YES—Faulty ODS unit; replace the ODS unit (see page 24-205), then clear the DTC.■

NO—Short in the ODS unit harness; replace the ODS unit harness, then clear the DTC.■

DTC 83-26: No Signal from the Front Passenger's Weight Sensor (rear outer side)

NOTE: Before doing this troubleshooting procedure, review SRS Precautions and Procedures (see page 24-13) and General Troubleshooting Information (see page 24-22).

1. Clear the DTC memory (see page 24-23).

2. Read the DTC (see page 24-22).

   Is DTC 83-26 indicated?

   YES—Go to step 3.

   NO—Intermittent failure, system is OK at this time. Go to Troubleshooting Intermittent Failures (see page 24-24).■

3. From the INSPECTION menu on the HDS, select SWS DTC CHECK.

   Is another DTC also indicated?

   YES—
   - DTC 26-11: Open in the ODS unit harness; replace the ODS unit harness, then clear the DTC.■
   - DTC 26-12: Go to step 4.
   - DTC 26-13: Go to step 11.
   - DTC 26-14: Go to step 19.

   NO—Intermittent failure, system is OK at this time. Go to Troubleshooting Intermittent Failures (see page 24-24).■

4. Turn the ignition switch to LOCK (0).

5. Disconnect the ODS unit harness 3P connector (A) from the front passenger's weight sensor (rear outer side).

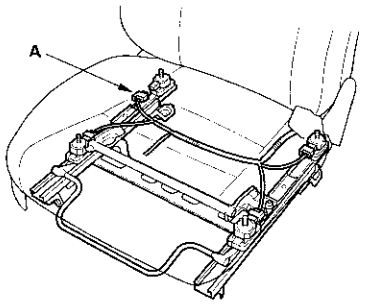

6. Read the DTC.

   Is DTC 26-12 indicated?

   YES—Go to step 7.

   NO—Faulty front passenger's weight sensor (rear outer side); replace the front passenger's seat slide assembly including all four front passenger's weight sensors (see page 24-203), then clear the DTC.■

7. Turn the ignition switch to LOCK (0).

8. Disconnect the ODS unit harness 18P connector (A) from the ODS unit.

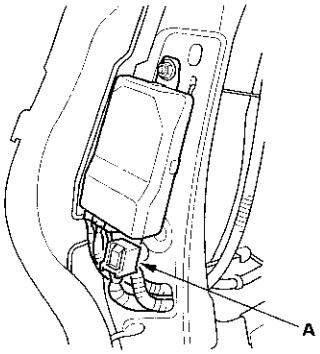

9. Measure the resistance between ODS unit harness 18P connector terminal No. 6 and body ground. There should be an open circuit or at least 1 MΩ.

ODS UNIT HARNESS 18P CONNECTOR

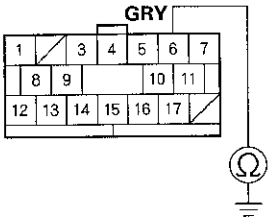

Wire side of female terminals

Is the resistance as specified?

YES—Go to step 10.

NO—Short to ground in the ODS unit harness; replace the ODS unit harness, then clear the DTC.■

(cont'd)

DTC Troubleshooting (cont'd)

10. Measure the resistance between ODS unit harness 18P connector terminals No. 6 and No. 16. There should be an open circuit or at least 1 MΩ.

ODS UNIT HARNESS 18P CONNECTOR

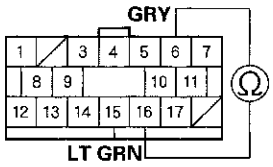

Wire side of female terminals

Is the resistance as specified?

YES—Faulty ODS unit; replace the ODS unit (see page 24-205), then clear the DTC. ■

NO—Short in the ODS unit harness; replace the ODS unit harness, then clear the DTC. ■

11. Turn the ignition switch to LOCK (0).

12. Swap the connections between the front passenger's weight sensor (rear outer side) and the front passenger's weight sensor (front outer side).

13. Read the DTC.

Is DTC 26-13 indicated?

YES—Go to step 14.

NO—Faulty front passenger's weight sensor (rear outer side); replace the front passenger's seat slide assembly including all four front passenger's weight sensors (see page 24-203), then clear the DTC. ■

14. Turn the ignition switch to LOCK (0).

15. Disconnect the front passenger's weight sensor (front outer side) connector (A) and front passenger's weight sensor (rear outer side) connector (B).

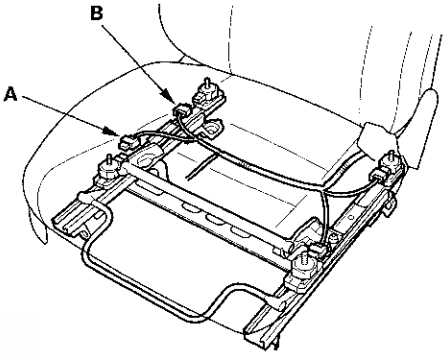

16. Disconnect the ODS unit harness 18P connector (A) from the ODS unit.

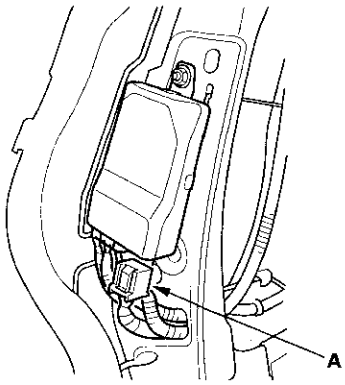

17. Turn the ignition switch to ON (II).

18. Measure the voltage between ODS unit harness 18P connector terminal No. 11 and body ground. There should be less than 0.2 V.

ODS UNIT HARNESS 18P CONNECTOR

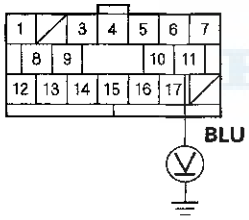

Wire side of female terminals

Is the voltage as specified?

YES—Faulty ODS unit; replace the ODS unit (see page 24-205), then clear the DTC. ■

NO—Short to power in the ODS unit harness; replace the ODS unit harness, then clear the DTC. ■

19. Turn the ignition switch to LOCK (0).

20. Disconnect the ODS unit harness 3P connector (A) from the front passenger's weight sensor (rear outer side).

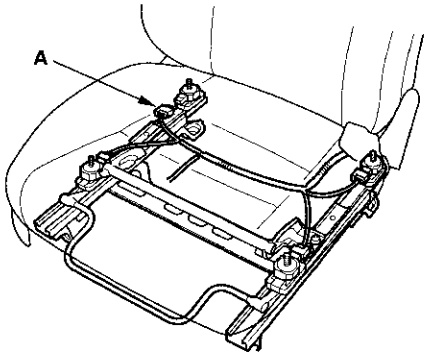

21. Read the DTC.

Is DTC 26-14 indicated?

YES—Go to step 22.

NO—Faulty front passenger's weight sensor (rear outer side); replace the front passenger's seat slide assembly including all four front passenger's weight sensors (see page 24-203), then clear the DTC. ■

22. Turn the ignition switch to LOCK (0).

23. Disconnect the ODS unit harness 18P connector (A) from the ODS unit.

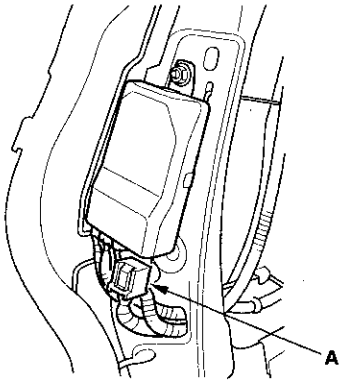

(cont'd)

DTC Troubleshooting (cont'd)

24. Measure the resistance between ODS unit harness 18P connector terminal No. 11 and body ground. There should be an open circuit or at least 1 MΩ.

ODS UNIT HARNESS 18P CONNECTOR

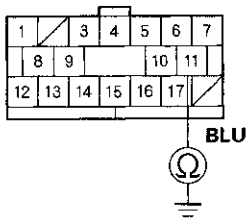

Wire side of female terminals

Is the resistance as specified?

YES—Go to step 25.

NO—Short to ground in the ODS unit harness; replace the ODS unit harness, then clear the DTC.■

25. Measure the resistance between ODS unit harness 18P connector terminals No. 11 and No. 16. There should be an open circuit or at least 1 MΩ.

ODS UNIT HARNESS 18P CONNECTOR

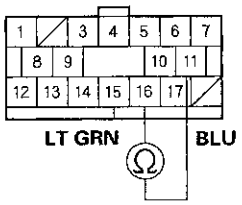

Wire side of female terminals

Is the resistance as specified?

YES—Faulty ODS unit; replace the ODS unit (see page 24-205), then clear the DTC.■

NO—Short in the ODS unit harness; replace the ODS unit harness, then clear the DTC.■

DTC 85-4x, 85-5x ("x" can be 0 thru 9 or A thru F) 85-63, 85-64: Internal Failure of the ODS Unit

NOTE: Before doing this troubleshooting procedure, review SRS Precautions and Procedures (see page 24-13) and General Troubleshooting Information (see page 24-22).

1. Clear the DTC memory (see page 24-23).

2. Turn the ignition switch to ON (II), and check that the SRS indicator comes on for about 6 seconds and then goes off.

   Does the SRS indicator stay on, and is DTC85-4x, 85-5x, 85-63, or 85-64 indicated?

   YES—Go to step 3.

   NO—Intermittent failure, system is OK at this time. Go to Troubleshooting Intermittent Failures (see page 24-24). If another DTC is indicated, troubleshoot the DTC.■

3. Initialize the ODS unit (see page 24-26).

4. Turn the ignition switch to ON (II), and check that the SRS indicator comes on for about 6 seconds and then goes off.

   Does the SRS indicator go off?

   YES—The system is OK.■

   NO—Go to step 5.

5. Replace the ODS unit (see page 24-205), then clear the DTC.■

6. Turn the ignition switch to ON (II), and check that the SRS indicator comes on for about 6 seconds and then goes off.

   Does the SRS indicator go off?

   YES—The system is OK.■

   NO—Replace the SRS unit (see page 24-199).■

DTC 85-71, 85-78: ODS Unit Not Initialize

NOTE: Before doing this troubleshooting procedure, review SRS Precautions and Procedures (see page 24-13) and General Troubleshooting Information (see page 24-22).

1. Clear the DTC memory (see page 24-23).

2. Turn the ignition switch to ON (II), and check that the SRS indicator comes on for about 6 seconds and then goes off.

   Does the SRS indicator stay on, and is DTC 85-71 or 85-78 indicated?

   YES—Go to step 3.

   NO—Intermittent failure, system is OK at this time. Go to Troubleshooting Intermittent Failures (see page 24-24). If another DTC is indicated, troubleshoot the DTC. ■

3. Initialize the ODS unit (see page 24-26).

4. Turn the ignition switch to ON (II), and check that the SRS indicator comes on for about 6 seconds and then goes off.

   Does the SRS indicator go off?

   YES—The system is OK. ■

   NO—Go to step 5.

5. Replace the ODS unit (see page 24-205), then clear the DTC.

6. Turn the ignition switch to ON (II), and check that the SRS indicator comes on for about 6 seconds and then goes off.

   Does the SRS indicator go off?

   YES—The system is OK. ■

   NO—Replace the SRS unit (see page 24-199). ■

DTC 85-79: OPDS Sensor Initial Check Failure

NOTE: Before doing this troubleshooting procedure, review SRS Precautions and Procedures (see page 24-13) and General Troubleshooting Information (see page 24-22).

1. Clear the DTC memory (see page 24-23).

2. Turn the ignition switch to ON (II), and check that the SRS indicator comes on for about 6 seconds and then goes off.

   Does the SRS indicator stay on, and is DTC 85-79 indicated?

   YES—Turn the ignition switch to LOCK (0), and go to step 3.

   NO—Intermittent failure, system is OK at this time. Go to Troubleshooting Intermittent Failures (see page 24-24). If another DTC is indicated, troubleshoot the DTC. ■

3. Make sure nothing is on the front passenger's seat.

4. Turn the ignition switch to ON (II), and check that the SRS indicator comes on for about 6 seconds and then goes off.

   Does the SRS indicator go off?

   YES—The system is OK. ■

   NO—Go to step 5.

5. Initialize the ODS unit (see page 24-26).

6. Turn the ignition switch to ON (II), and check that the SRS indicator comes on for about 6 seconds and then goes off.

   Does the SRS indicator go off?

   YES—The system is OK. ■

   NO—Replace the ODS unit (see page 24-205), then clear the DTC, and retest. If the DTC is still present, replace the OPDS sensor/seat-back (see page 20-110). ■

DTC Troubleshooting (cont'd)

DTC 86-1x ("x" can be 0 thru 9 or A thru F):
Faulty OPDS Seat-Back Sensor

DTC 86-2x ("x" can be 0 thru 9 or A thru F):
Faulty OPDS Seat Support Sensor

NOTE: Before doing this troubleshooting procedure, review SRS Precautions and Procedures (see page 24-13) and General Troubleshooting Information (see page 24-22).

1. Clear the DTC memory (see page 24-23).

2. Turn the ignition switch to ON (II), and check that the SRS indicator comes on for about 6 seconds and then goes off.

   Does the SRS indicator stay on, and is DTC 86-1x or 86-2x indicated?

   YES—Go to step 3.

   NO—Intermittent failure, system is OK at this time. Go to Troubleshooting Intermittent Failures (see page 24-24). If another DTC is indicated, troubleshoot the DTC.■

   NOTE: Aftermarket devices (fluorescent lights, laptop computers, etc.) used near the front passenger's seat-back can interfere with the seat-back sensors and cause a false DTC 86-1x or 86-2x. If one of these devices was used, erase the DTC, operate the device near the seat-back, and recheck for DTCs. If DTC 86-1x or 86-2x is set, erase it, and do not use the device near the seat-back.

3. Check the connections at the OPDS sensor harness connectors (A) and the ODS unit harness 18P connector (B).

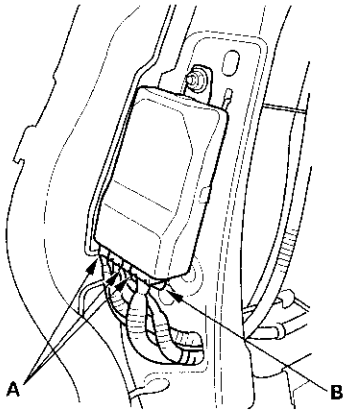

   Are the connections OK?

   YES—Go to step 4.

   NO—Repair the poor connections, and clear the DTC.■

4. Replace the OPDS sensor/seat-back foam (see page 20-110), then clear the DTC, and initialize the ODS unit (see page 24-26).

5. Clear the DTC memory, then check for DTC 86-1x or 86-2x.

   Is DTC 86-1x or 86-2x indicated?

   YES—Replace the ODS unit (see page 24-205), then clear the DTC.■

   NO—The system is OK.■

DTC 92-1x ("x" can be 0 thru 9 or A thru F): Open in the Passenger's Airbag Cutoff Indicator

NOTE: Before doing this troubleshooting procedure, review SRS Precautions and Procedures (see page 24-13), General Troubleshooting Information (see page 24-22), and Battery Terminal Disconnection and Reconnection (see page 22-62).

1. Clear the DTC memory (see page 24-23).

2. Turn the ignition switch to ON (II), and check that the SRS indicator comes on for about 6 seconds and then goes off.

   Does the SRS indicator stay on, and is DTC 92-1x indicated?

   YES—Go to step 3.

   NO—Intermittent failure, system is OK at this time. Go to Troubleshooting Intermittent Failures (see page 24-24). If another DTC is indicated, troubleshoot the DTC. ■

3. Turn the ignition switch to LOCK (0). Disconnect the negative cable from the battery, then wait at least 3 minutes.

4. Disconnect the passenger's airbag cutoff indicator 4P connector (see page 24-208).

5. Disconnect SRS unit connector A (28P) from the SRS unit (see step 9 on page 24-21).

6. Reconnect the negative cable to the battery.

7. Turn the ignition switch to ON (II).

8. Measure the voltage between SRS unit connector A (28P) terminal No. 13 and body ground. There should be less than 0.2 V.

SRS UNIT CONNECTOR A (28P)

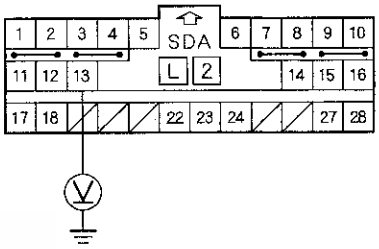

Wire side of female terminals

Is the voltage as specified?

YES—Faulty SRS unit or passenger's airbag cutoff indicator; replace the passenger's airbag cutoff indicator, then clear the DTC. If the problem is still present, replace the SRS unit (see page 24-199). ■

NO—Short to power in the dashboard wire harness; replace the dashboard wire harness, then clear the DTC. ■

DTC Troubleshooting (cont'd)

DTC 92-2x ("x" can be 0 thru 9 or A thru F): Open or Short to Ground in the Passenger's Airbag Cutoff Indicator

NOTE: Before doing this troubleshooting procedure, review SRS Precautions and Procedures (see page 24-13), General Troubleshooting Information (see page 24-22), and Battery Terminal Disconnection and Reconnection (see page 22-62).

1. Clear the DTC memory (see page 24-23).

2. Turn the ignition switch to ON (II), and check that the SRS indicator comes on for about 6 seconds and then goes off.

   Does the SRS indicator stay on, and DTC 92-2x indicated?

   YES—Go to step 3.

   NO—Intermittent failure, system is OK at this time. Go to Troubleshooting Intermittent Failures (see page 24-24). If another DTC is indicated, troubleshoot the DTC. ■

3. Turn the ignition switch to LOCK (0). Disconnect the negative cable from the battery, then wait at least 3 minutes.

4. Disconnect the passenger's airbag cutoff indicator 4P connector (see page 24-208).

5. Disconnect SRS unit connector A (28P) from the SRS unit (see step 9 on page 24-21).

6. Measure the resistance between SRS unit connector A (28P) terminal No. 13 and passenger's airbag cutoff indicator 4P connector terminal No. 4. There should be lass than 1.0 Ω.

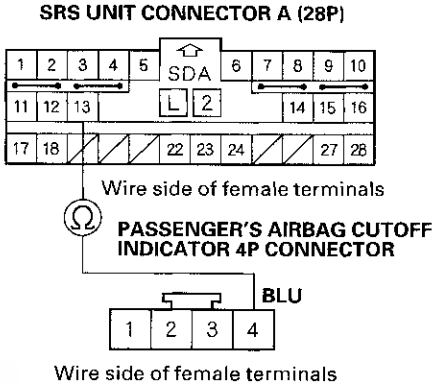

   Is the resistance as specified?

   YES—Go to step 7.

   NO—Open in the dashboard wire harness; replace the dashboard wire harness, then clear the DTC. ■

7. Measure the resistance between SRS unit connector A (28P) terminal No. 13 and body ground. There should be an open circuit or at least 1 MΩ.

SRS UNIT CONNECTOR A (28P)

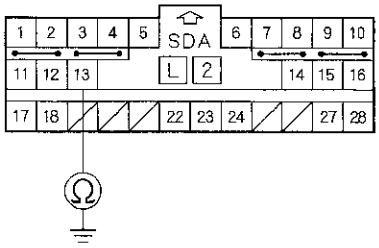

Wire side of female terminals

Is the resistance as specified?

YES—Replace the passenger's airbag cutoff indicator, then clear the DTC. If the problem is still present, replace the SRS unit (see page 24-199). ■

NO—Short to ground in the dashboard wire harness; replace the dashboard wire harness, then clear the DTC. ■

DTC A1-1x ("x" can be 0 thru 9 or A thru F): Faulty Power Supply (VA Line)

NOTE: Before doing this troubleshooting procedure, review SRS Precautions and Procedures (see page 24-13), General Troubleshooting Information (see page 24-22), and Battery Terminal Disconnection and Reconnection (see page 22-62).

1. Clear the DTC memory (see page 24-23).

2. Turn the ignition switch to ON (II), and wait for 10 seconds.

3. Read the DTC (see page 24-22).

   Is DTC A1-1x indicated?

   YES—Go to step 4.

   NO—Intermittent failure, system is OK at this time. Go to Troubleshooting Intermittent Failures (see page 24-24). If another DTC is indicated, troubleshoot the DTC. ■

4. Turn the ignition switch to LOCK (0).

5. Check the No. 9 (7.5 A) fuse in the under-dash fuse/relay box.

   Is the fuse OK?

   YES—Go to step 6.

   NO—Replace the fuse, then turn the ignition switch to ON (II). If the fuse blows again, check for a short in the No. 9 (7.5 A) fuse circuit (dashboard wire harness, floor wire harness, front passenger's seat belt wire harness (with seat heater) or ODS unit harness), then clear the DTC. ■

6. Disconnect the negative cable from the battery, then wait at least 3 minutes.

7. Disconnect the SRS unit connector A (28P) from the SRS unit (see step 9 on page 24-21).

8. Reconnect the negative cable to the battery.

(cont'd)

DTC Troubleshooting (cont'd)

9. Connect a voltmeter between SRS unit connector A (28P) terminal No. 17 and body ground. Turn the ignition switch to ON (II), and measure the voltage. There should be battery voltage when the ignition switch is on.

SRS UNIT CONNECTOR A (28P)

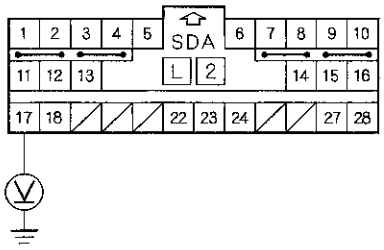

Wire side of female terminals

Is there battery voltage?

YES—Faulty SRS unit or poor connection at SRS unit connector A (28P) and the SRS unit. Check the connection between the connector and the SRS unit. If the connection is OK, replace the SRS unit (see page 24-199). ■

NO—Go to step 10.

10. Turn the ignition switch to LOCK (0).

11. Disconnect under-dash fuse/relay box connector J (4P).

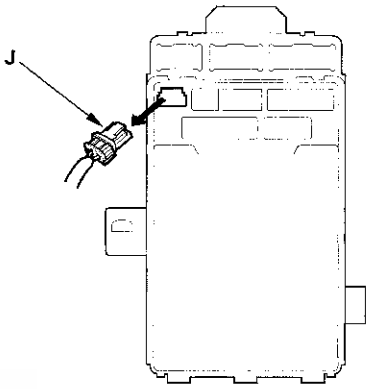

12. Measure the resistance between SRS unit connector A (28P) terminal No. 17 and under-dash fuse/relay box connector J (4P) terminal No. 4. There should be less than 1.0 Ω.

UNDER-DASH FUSE/RELAY BOX CONNECTOR J (4P) **SRS UNIT CONNECTOR A (28P)**

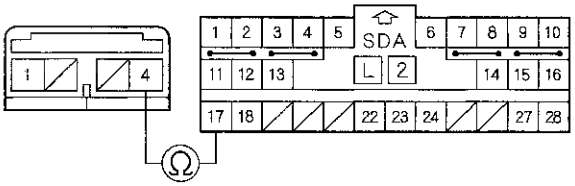

Wire side of female terminals

Is the resistance as specified?

YES—Open in the under-dash fuse/relay box or poor contact between connector J (4P) and the under-dash fuse/relay box; check the connection. If the connection is OK, replace the under-dash fuse/relay box (see page 22-60), then clear the DTC. ■

NO—Open in the dashboard wire harness; replace the dashboard wire harness, then clear the DTC. ■

DTC A2-1x ("x" can be 0 thru 9 or A thru F): Faulty Power Supply (VB Line)

NOTE: Before doing this troubleshooting procedure, review SRS Precautions and Procedures (see page 24-13), General Troubleshooting Information (see page 24-22), and Battery Terminal Disconnection and Reconnection (see page 22-62).

1. Check the No. 11 (10 A) fuse in the under-dash fuse/relay box.

   Is the fuse OK?

   YES—Go to step 2.

   NO—Replace the fuse, then turn the ignition switch to ON (II). If the fuse blows again, check for a short to ground in the under-dash fuse/relay box No. 11 (10 A) fuse line, in dashboard wire harness; replace the under-dash fuse/relay box, then clear the DTC.■

2. Turn the ignition switch to LOCK (0). Disconnect the battery negative cable, then wait at least 3 minutes.

3. Disconnect SRS unit connector A (28P) from the SRS unit (see step 9 on page 24-21).

4. Reconnect the negative cable to the battery.

5. Connect a voltmeter between SRS unit connector A (28P) terminal No. 18 and body ground. Turn the ignition switch to ON (II), and measure the voltage. There should be battery voltage when the ignition switch is on.

SRS UNIT CONNECTOR A (28P)

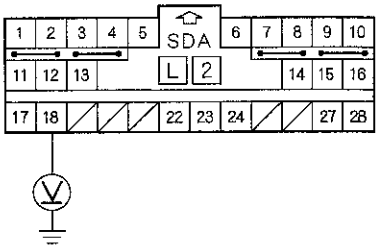

Wire side of female terminals

   Is there battery voltage?

   YES—Faulty SRS unit or poor contact at SRS unit connector A (28P) and the SRS unit; check the connection. If the connection is OK, replace the SRS unit (see page 24-199).■

   NO—Go to step 6.

6. Turn the ignition switch to LOCK (0).

7. Disconnect under-dash fuse/relay box connector J (4P).

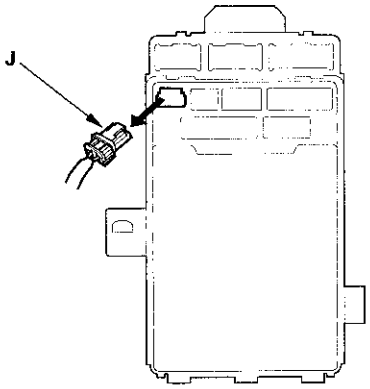

(cont'd)

DTC Troubleshooting (cont'd)

8. Measure the resistance between SRS unit connector A (28P) terminal No. 18 and under-dash fuse/relay box connector J (4P) terminal No. 1. There should be less than 1.0 Ω.

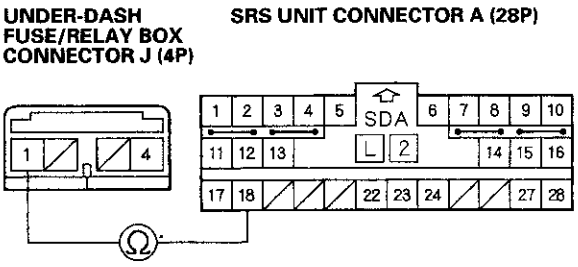

Wire side of female terminals

Is the resistance as specified?

YES—Open in the under-dash fuse/relay box or poor contact between connector J (4P) and the under-dash fuse/relay box; check the connection. If the connection is OK, replace the under-dash fuse/relay box (see page 22-60), then clear the DTC. ■

NO—Open in the dashboard wire harness; replace the dashboard wire harness, then clear the DTC. ■

DTC B2-1x ("x" can be 0 thru 9 or A thru F): No Signal from the Rear Safing Sensor

Special Tools Required
- SRS inflator simulator 07SAZ-TB4011A
- SRS simulator lead L 070AZ-SNAA300

NOTE: Before doing this troubleshooting procedure, review SRS Precautions and Procedures (see page 24-13) and General Troubleshooting Information (see page 24-22).

1. Clear the DTC memory (see page 24-23).

2. Turn the ignition switch to ON (II), and check that the SRS indicator comes on for about 6 seconds and then goes off.

3. Read the DTC (see page 24-22).

   Does the SRS indicator stays on, and is DTC B2-11 indicated?

   YES—Go to step 4.

   NO—Go to step 5.

4. Read the DTC (see page 24-22).

   Is DTC 45-11 also indicated?

   YES—Faulty rear safing sensor; replace the rear safing sensor (see page 24-202), then clear the DTC. ■

   NO—Go to step 7.

5. Read the DTC (see page 24-22).

   Is DTC B2-1x (except B2-11) also indicated?

   YES—Go to step 6.

   NO—Intermittent failure, system is OK at this time. Go to Troubleshooting Intermittent Failures (see page 24-24). If another DTC is indicated, troubleshoot the DTC. ■

6. Read the DTC (see page 24-22).

   Is DTC 45-11 also indicated?

   YES—Troubleshoot DTC 45-1x (see page 24-128).■

   NO—Faulty rear safing sensor; replace the rear safing sensor (see page 24-202), then clear the DTC.■

7. Turn the ignition switch to LOCK (0).

8. Disconnect the floor wire harness 4P connector (A) from the rear safing sensor.

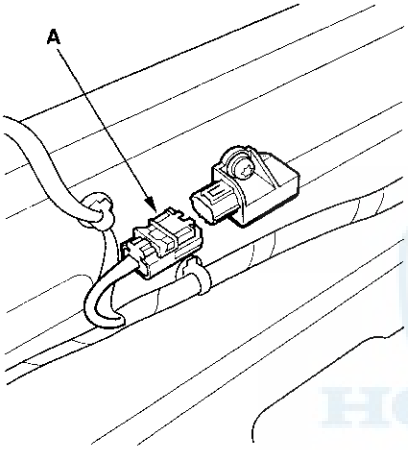

9. Disconnect the floor wire harness 4P connector (A) from the left side impact sensor (first).

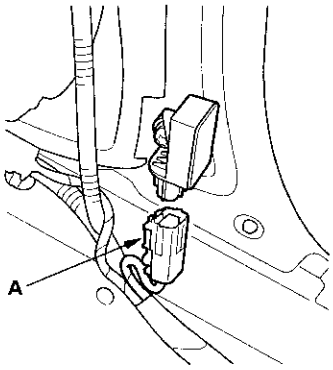

10. Measure the resistance between rear safing sensor 4P connector terminals No. 2 and No. 3. There should be an open circuit or at least 1 MΩ.

REAR SAFING SENSOR 4P CONNECTOR

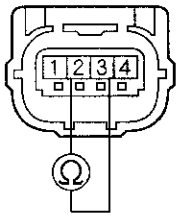

Terminal side of female terminals

Is the resistance as specified?

YES—Go to step 11.

NO—Short in the floor wire harness; replace the floor wire harness, then clear the DTC.■

11. Measure the resistance between rear safing sensor 4P connector terminal No. 2 and body ground. There should be an open circuit or at least 1 MΩ.

REAR SAFING SENSOR 4P CONNECTOR

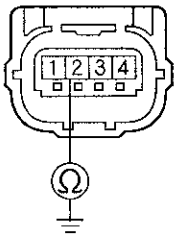

Terminal side of female terminals

Is the resistance as specified?

YES—Go to step 12.

NO—Short to ground in the floor wire harness; replace the floor wire harness, then clear the DTC.■

(cont'd)

DTC Troubleshooting (cont'd)

12. Measure the resistance between rear safing sensor 4P connector terminal No. 3 and body ground. There should be an open circuit or at least 1 MΩ.

REAR SAFING SENSOR 4P CONNECTOR

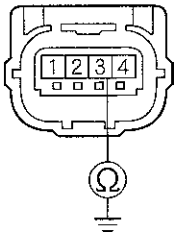

Terminal side of female terminals

Is the resistance as specified?

YES—Go to step 13.

NO—Short to ground in the floor wire harness; replace the floor wire harness, then clear the DTC.■

13. Turn the ignition switch to ON (II).

14. Measure the voltage between rear safing sensor 4P connector terminal No. 2 and body ground. There should be less than 0.2 V.

REAR SAFING SENSOR 4P CONNECTOR

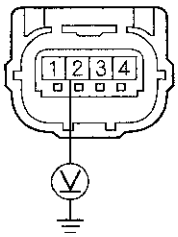

Terminal side of female terminals

Is the voltage as specified?

YES—Go to step 15.

NO—Short to power in the floor wire harness; replace the floor wire harness, then clear the DTC.■

15. Measure the voltage between rear safing sensor 4P connector terminal No. 3 and body ground. There should be less than 0.2 V.

REAR SAFING SENSOR 4P CONNECTOR

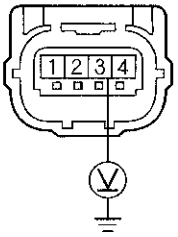

Terminal side of female terminals

Is the voltage as specified?

YES—Go to step 16.

NO—Short to power in the floor wire harness; replace the floor wire harness, then clear the DTC.■

16. Turn the ignition switch to LOCK (0).

17. Connect the SRS inflator simulator (jumper connector) and the red lead (A) of simulator lead L to the floor wire harness 4P connector (B) at the left side impact sensor (first).

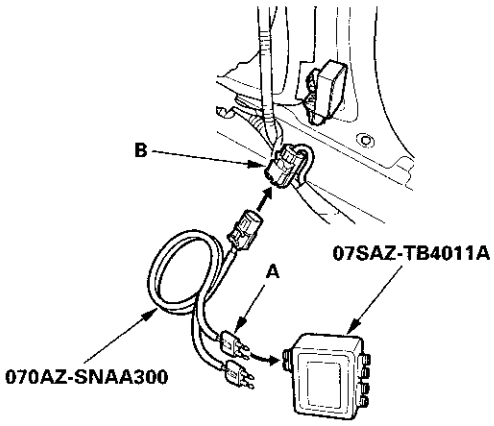

18. Measure the resistance between rear safing sensor 4P connector terminals No. 2 and No. 3. There should less than 1.0 Ω.

REAR SAFING SENSOR 4P CONNECTOR

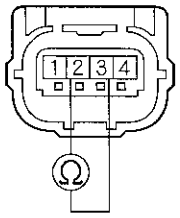

Terminal side of female terminals

Is the resistance as specified?

YES—Faulty rear safing sensor or poor connection at the floor wire harness 4P connector and the rear safing sensor. Check the connection between the connector and the rear safing sensor. If the connection is OK, replace the rear safing sensor (see page 24-202), then clear the DTC.■

NO—Open in the floor wire harness; replace the floor wire harness, then clear the DTC.■

DTC B2-17, B2-8x, B2-9x, B2-Ax, B2-Bx ("x" can be 0 thru 9 or A thru F): Internal Failure of the Rear Safing Sensor

NOTE: Before doing this troubleshooting procedure, review SRS Precautions and Procedures (see page 24-13) and General Troubleshooting Information (see page 24-22).

1. Clear the DTC memory (see page 24-23).

2. Turn the ignition switch to ON (II), and check that the SRS indicator comes on for about 6 seconds and then goes off.

   Does the SRS indicator stay on, and is B2-17, B2-8x, B2-9x, B2-Ax, or B2-Bx indicated?

   YES—Replace the rear safing sensor (see page 24-202), then clear the DTC. If the DTC returns, replace the SRS unit (see page 24-199).■

   NO—Intermittent failure, system is OK at this time. Go to Troubleshooting Intermittent Failures (see page 24-24). If another DTC is indicated, troubleshoot the DTC.■

DTC Troubleshooting (cont'd)

DTC 41-xx, 42-xx, 43-xx ("x" can be 0 thru 9 or A thru F): Internal Failure of the ODS Unit

NOTE: Only read DTCs from the SRS menu, not from the SWS menus unless instructed to check the SWS DTCs. SWS (ODS unit) DTCs are subcodes of SRS unit DTCs. Only troubleshoot the corresponding SRS DTCs.

Do the troubleshooting for SRS unit DTC 81-4x (see page 24-146).

DTC 71-xx ("x" can be 0 thru 9 or A thru F): ODS Unit Does Not Calibrate

NOTE: Only read DTCs from the SRS menu, not from the SWS menus unless instructed to check the SWS DTCs. SWS (ODS unit) DTCs are subcodes of SRS unit DTCs. Only troubleshoot the corresponding SRS DTCs.

Do the troubleshooting for SRS unit DTC 81-71 (see page 24-146).

DTC 14-11: Short to Power in the Front Passenger's Weight Sensor (front inner side) Power Circuit

DTC 14-12: Short to Ground in the Front Passenger's Weight Sensor (front inner side) Power Circuit

DTC 14-13: Open in the Front Passenger's Weight Sensor (front inner side) Output Circuit

DTC 14-14: Short to Ground in the Front Passenger's Weight Sensor (front inner side) Output Circuit

NOTE: Only read DTCs from the SRS menu, not from the SWS menus unless instructed to check SWS DTCs. SWS (ODS unit) DTCs are subcodes of SRS unit DTCs. Only troubleshoot the corresponding SRS DTCs.

Do the troubleshooting for SRS unit DTC 82-14 (see page 24-147).

DTC 16-11: Short to Power in the Front Passenger's Weight Sensor (rear inner side) Power Circuit

DTC 16-12: Short to Ground in the Front Passenger's Weight Sensor (rear inner side) Power Circuit

DTC 16-13: Open in the Front Passenger's Weight Sensor (rear inner side) Output Circuit

DTC 16-14: Short to Ground in the Front Passenger's Weight Sensor (rear inner side) Output Circuit

NOTE: Only read DTCs from the SRS menu, not from the SWS menus unless instructed to check SWS DTCs. SWS (ODS unit) DTCs are subcodes of SRS unit DTCs. Only troubleshoot the corresponding SRS DTCs.

Do the troubleshooting for SRS unit DTC 82-16 (see page 24-152).

DTC Troubleshooting (cont'd)

DTC 24-11: Short to Power in the Front Passenger's Weight Sensor (front outer side) Power Circuit

DTC 24-12: Short to Ground in the Front Passenger's Weight Sensor (front outer side) Power Circuit

DTC 24-13: Open in the Front Passenger's Weight Sensor (front outer side) Output Circuit

DTC 24-14: Short to Ground in the Front Passenger's Weight Sensor (front outer side) Output Circuit

NOTE: Only read DTCs from the SRS menu, not from the SWS menus unless instructed to check SWS DTCs. SWS (ODS unit) DTCs are subcodes of SRS unit DTCs. Only troubleshoot the corresponding SRS DTCs.

Do the troubleshooting for SRS unit DTC 82-24 (see page 24-155).

DTC 26-11: Short to Power in the Front Passenger's Weight Sensor (rear outer side) Power Circuit

DTC 26-12: Short to Ground in the Front Passenger's Weight Sensor (rear outer side) Power Circuit

DTC 26-13: Open in the Front Passenger's Weight Sensor (rear outer side) Output Circuit

DTC 26-14: Short to Ground in the Front Passenger's Weight Sensor (rear outer side) Output Circuit

NOTE: Only read DTCs from the SRS menu, not from the SWS menus unless instructed to check SWS DTCs. SWS (ODS unit) DTCs are subcodes of SRS unit DTCs. Only troubleshoot the corresponding SRS DTCs.

Do the troubleshooting for SRS unit DTC 83-26 (see page 24-159).

HONDA

DTC 15-3x ("x" can be 0 thru 9 or A thru F):
No Signal From the Front Inner Side Front Passenger's Weight Sensor

DTC 17-3x ("x" can be 0 thru 9 or A thru F):
No Signal From the Rear Inner Side Front Passenger's Weight Sensor

DTC 25-3x ("x" can be 0 thru 9 or A thru F):
No Signal From the Front Outer Side Front Passenger's Weight Sensor

DTC 27-3x ("x" can be 0 thru 9 or A thru F):
No Signal From the Rear Outer Side Front Passenger's Weight Sensor

NOTE: Only read DTCs from the SRS menu, not from the SWS menus unless instructed to check SWS DTCs. SWS (ODS unit) DTCs are subcodes of SRS unit DTCs. Only troubleshoot the corresponding SRS DTCs.

Do the troubleshooting for SRS unit DTC 82-15, 82-17, 83-25, and 83-27 (see page 24-151).

SRS indicator does not come on

1. Turn the ignition switch to ON (II), and see if the malfunction indicator lamp (MIL) come on.

2. Connect the HDS to the data link connector (DLC) (see page 24-22).

3. Make sure the HDS communicates with the vehicle and the SRS unit. If it does not communicate, troubleshoot the DLC circuit (see page 11-213).

4. Do the gauge control module self-diagnostic function (see page 22-223).

   Does the SRS indicator come on?

   YES—Faulty SRS unit; replace the SRS unit (see page 24-199). ■

   NO—Faulty gauge control module (tach); replace the gauge control module (tach) (see page 22-248). ■

Symptom Troubleshooting

SRS indicator stays on, but no DTCs are stored

NOTE: Before doing this troubleshooting procedure, check the battery is sufficiently charged. If the battery is low, SRS indicator stays on.

1. Turn the ignition switch to ON (II), and see if the malfunction indicator lamp (MIL) comes on and stays on.

   Does the MIL come on?

   YES—Check for a PGM-FI System DTC and troubleshoot as necessary (see page 11-212).■

   NO—Go to step 2.

2. Connect the HDS to the data link connector located under driver's side of the dashboard.

3. Make sure the HDS communicates with the vehicle and the SRS unit. If it does not troubleshoot the DLC circuit (see page 11-213).

4. Read the DTC (see page 24-22).

   Are any SRS DTCs indicated?

   YES—Troubleshoot the SRS DTC.

   NO—Go to step 5.

5. Select Body Electrical status with the HDS.

6. Check for DTCs in the Gauge Menu with the HDS.

   Is DTC B1187 indicated?

   YES—Go to the DTC B1187 troubleshooting (see page 22-246).■

   NO—Faulty gauge control module; replace the gauge control module (see page 22-255).■

7. Does the gauge self-diagnostic test (see page 22-223).

   Does the SRS indicator flash?

   YES—Go to step 8.

   NO—Faulty gauge control module; replace the gauge control module (see page 22-255).■

8. Turn the ignition switch to LOCK (0). Disconnect the negative cable from the battery, then wait at least 3 minutes.

9. Disconnect SRS unit connector A (28P) from the SRS unit (see step 9 on page 24-21).

10. Measure the resistance between SRS unit connector A (28P) terminal No. 5 and body ground. There should be an open circuit or at least 1 MΩ.

SRS UNIT CONNECTOR A (28P)

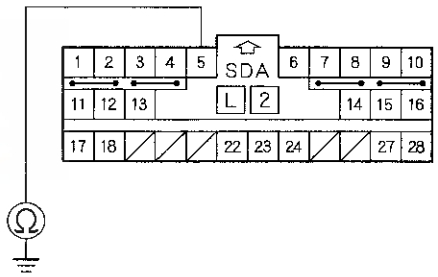

Wire side of female terminals

Is the resistance as specified?

YES—Faulty SRS unit or poor connection at SRS unit connector A (28P) and the SRS unit. Check the connection between the connector and the SRS unit. If the connection is OK, replace the SRS unit (see page 24-199).■

NO—Short in the dashboard wire harness; replace the dashboard wire harness.■

Side airbag cutoff indicator stays on

1. Make sure nothing is on the front passenger's seat.

2. Make sure the seat-back is dry.

3. Turn the ignition switch to ON (II), and see if the SRS indicator comes on.

   Does the SRS indicator come on and stay on?

   YES—Go to the Symptom Troubleshooting "SRS indicator stays on, but no DTCs are stared".

   NO—Go to step 2.

4. Connect the HDS to the data link connector located under driver's side of the dashboard.

5. Make sure the HDS communicates with the vehicle and the SRS unit. If it does not troubleshoot the DLC circuit (see page 11-213).

6. Select Body Electrical status with the HDS.

7. Check for DTCs in the Gauge Menu with the HDS.

   Is DTC B1187 indicated?

   YES—Go to the DTC B1187 troubleshooting (see page 22-246). ■

   NO—Go to step 8.

8. Do the gauge control module self-diagnostic function (see page 22-223).

   Does the side airbag cutoff indicator flash?

   YES—Initialize the ODS unit (see page 24-26). If problem is still present, replace the OPDS sensor/ seat-back (see page 20-110). ■

   NO—Faulty gauge control module; replace the gauge control module (see page 22-255). ■

Side airbag cutoff indicator does not come on

NOTE: If the SRS indicator also stays on, go to SRS indicator stays on, but no DTCs are stored (see page 24-178).

1. Turn the ignition switch to LOCK (0), then wait for 10 seconds.

2. Turn the ignition switch to ON (II), and check that the side airbag cutoff indicator comes on for about 6 seconds.

   Does the side airbag cutoff indicator come on?

   YES—Intermittent failure, the system is OK at this time. ■

   NO—Go to step 3.

3. Connect the HDS to the data link connector located under driver's side of the dashboard.

4. Make sure the HDS communicates with the vehicle and the SRS unit. If it does not troubleshoot the DLC circuit (see page 11-213).

5. Do the gauge control module self-diagnostic function with the HDS (see page 22-223).

   Does the side airbag cutoff indicator come on?

   YES—Faulty SRS unit; replace the SRS unit (see page 24-199). ■

   NO—Faulty gauge control module (tach); replace the gauge control module (tach) (see page 22-239). ■

Symptom Troubleshooting (cont'd)

Passenger's airbag cutoff indicator stays on or comes on suddenly

NOTE: Under the following conditions, the passenger's airbag cutoff indicator stays on or comes on suddenly.

- No one is sitting the front passenger's seat, but there is an object on the seat more than 5 kg (11 lbs).
- The seat belt is buckled, but no one is sitting on the front passenger's seat.
- Someone who is less than 30 kg (66 lbs) is sitting on the front passenger's seat.
- Someone who is more than 30 kg (66 lbs) but is supporting some of their body weight on their legs, feet, arms, or hands.

1. Check for these items, then recheck the passenger's airbag cutoff indicator.

   - The front passenger's seat is/was installed correctly.
   - Nothing is/was on the front passenger's seat.
   - Nothing is/was under the front passenger's seat.
   - Nothing is/was in the front passenger's seat-back pocket.
   - Whoever was sitting on the passenger's seat was sitting in the proper sitting position.

   Does the passenger's airbag cutoff indicator stay on?

   YES—Go to step 2.

   NO—Troubleshooting is complete.■

2. Connect the HDS to the DLC (see page 24-22).

3. Turn the ignition switch to ON (II).

4. Make sure the HDS communicates with the vehicle and the SRS unit. If it does not communicate, troubleshoot the DLC circuit (see page 11-213).

5. Select the INSPECTION menu on the HDS, then select AFTER REPLACING FRONT PASSENGER'S SEAT COMPONENT(S), and follow the prompts.

   Does the passenger's airbag cutoff indicator stay on?

   YES—Go to step 6.

   NO—Troubleshooting is complete.■

6. Select the INSPECTION menu on the HDS, then select AFTER A VEHICLE COLLISION, and follow the prompts.

   Does the passenger's airbag cutoff indicator stay on?

   YES—Replace the SRS unit (see page 24-199).■

   NO—Troubleshooting is complete.■

Component Replacement/Inspection After Deployment

NOTE:
- Before doing any SRS repairs, check the SRS DTCs (see page 24-22) for the less obvious deployed components (seat belt tensioners, front impact sensors, side airbag sensors, etc.).
- Do not replace the ODS unit unless it is physically damage or a specific fault was found during DTC troubleshooting.
- After a vehicle collision, do the ODS unit operation check (see page 24-40).
- After a vehicle collision, inspect the front seat active head restraints (see page 20-104).

After a collision where the seat belt tensioners deployed, replace these items:
- SRS unit
- Seat belt tensioners
- Seat belt buckle tensioners
- Front impact sensors

After a collision where the front airbag(s) deployed, replace these items:
- SRS unit
- Deployed airbag(s)
- Seat belt tensioners
- Seat belt buckle tensioners
- Front impact sensors

After a collision where the side airbag(s) deployed, replace these items:
- SRS unit
- Side impact sensor(s) (first)
- Side impact sensor(s) (second)
- B-pillar lower trim
- Front seat assembly (Impact side)

After a collision where a side curtain airbag deployed, replace the items for the side(s) that deployed:
- SRS unit
- Deployed side curtain airbag(s)
- Seat belt tensioner(s)
- Side impact sensor(s) (first)
- Side impact sensor(s) (second)
- Rear safing sensor
- Roof trim
- A-pillar trim
- B-pillar lower trim
- C-pillar trim
- Front grab handle
- Rear grab handle
- All related trim clips
- Sunvisor

(cont'd)

Component Replacement/Inspection After Deployment (cont'd)

After a moderate to severe side or rear collision, inspect for any damage on the side curtain airbag or other related components. Replace the components as needed.

A-Pillar Trim

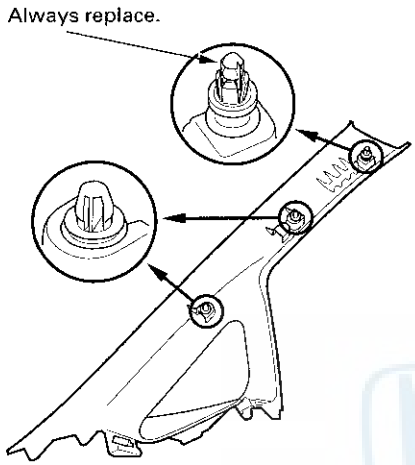

B-Pillar Trim

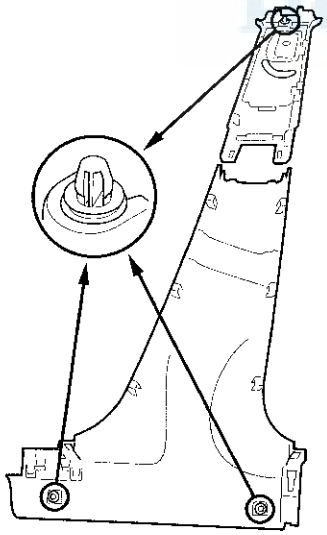

C-Pillar Trim

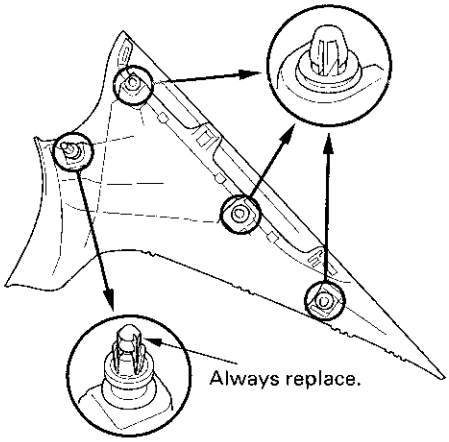

During the repair process, inspect these areas:

- Inspect all the SRS wire harnesses. Replace, do not repair, any damaged harnesses.
- Inspect the cable reel for heat damage. If there is any damage, replace the cable reel.

After the vehicle is completely repaired, turn the ignition switch to ON (II). If the SRS indicator comes on for about 6 seconds and then goes off, the SRS is OK. If the indicator does not function properly, use the HDS to read the DTC (see page 24-22). If you cannot retrieve a code. Do the SRS Symptom Troubleshooting.

Checking and Adjusting the Headliner/Pillar Trim Overlap

To prevent the side curtain airbag from deploying and damaging the pillar trim, the overlap between the headliner and pillar trim must be less than 15 mm (0.6 in.). To check the overlap, do this:

1. Install the headliner (A) and the pillar trims (B).

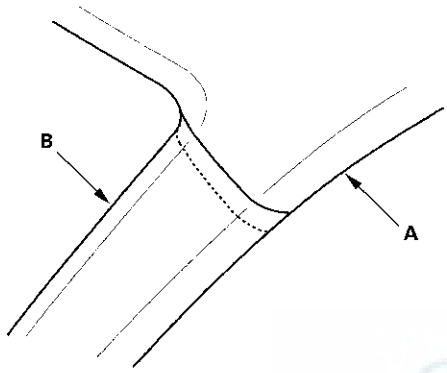

This illustration shows the A-pillar.

2. Using masking tape on the headliner, mark the upper edge of each pillar trim.

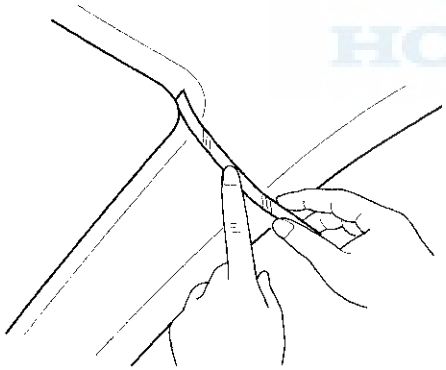

This illustration shows the A-pillar.

3. Remove the pillar trim, and measure the headliner overlap.
   - If the overlap is less than 15 mm (0.6 in.), remove the tape, and install the pillar trim.
   - If the overlap is more than 15 mm (0.6 in.), go to step 4.

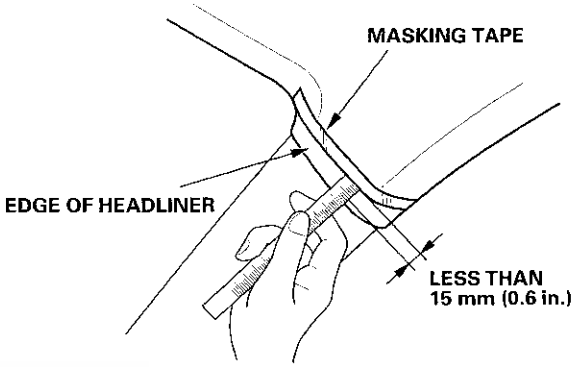

This illustration shows the A-pillar.

4. Carefully trim the headliner with a utility knife, reducing the overlap to less than 15 mm (0.6 in.).

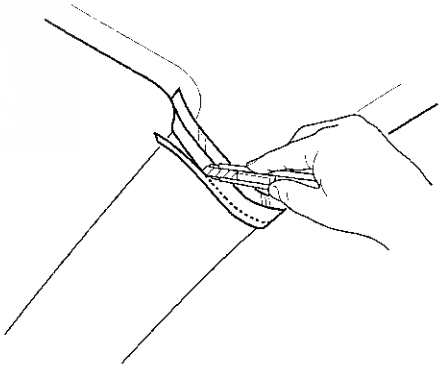

This illustration shows the A-pillar.

5. Remove the tape, and install the pillar trim.

Driver's Airbag Replacement

NOTE: If replacing the driver's airbag after deployment, refer to Component Replacement/Inspection After Deployment (see page 24-181) for a complete list of other parts that must also be replaced.

Removal

1. Do the battery terminal disconnection procedure (see page 22-62), then wait at least 3 minutes before starting work.

2. Remove the access panel (A) from the steering wheel, then disconnect the driver's airbag 4P connector (B) from the cable reel 4P connector.

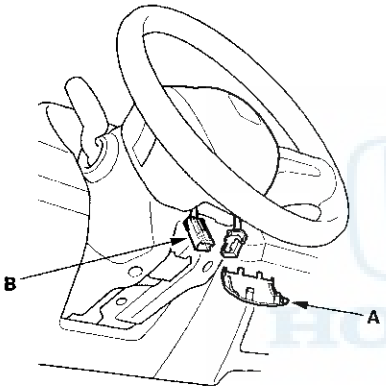

3. Using a TORX T30 bit, remove the two TORX bolts (A) and discard them.

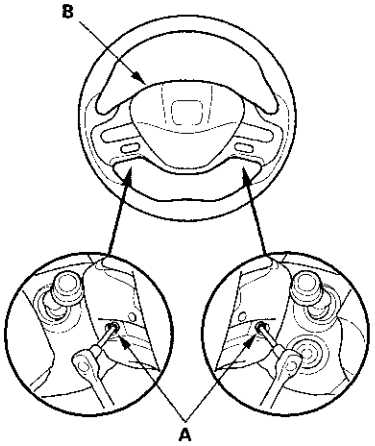

4. Disconnect the horn switch connector (1P), then remove the driver's airbag (B).

Installation

1. Connect the horn switch connector (1P) (A) to the driver's airbag.

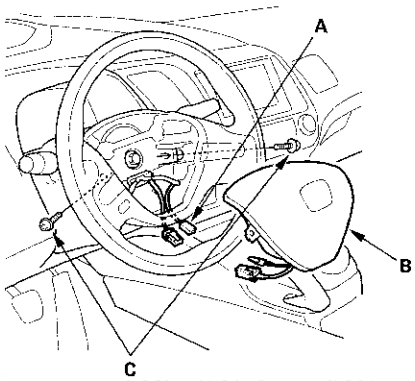

2. Place the driver's airbag (B) in the steering wheel, and secure it with new TORX bolts (C).

3. Connect the cable reel 4P connector to the driver's airbag 4P connector (A), then install the access panel (B) on the steering wheel.

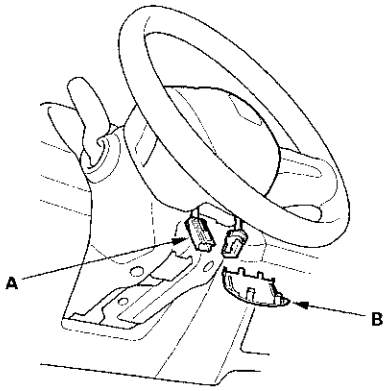

4. Do the battery terminal reconnection procedure (see page 22-62).

5. Clear any DTCs (see page 24-23).

6. After installing the airbag, confirm proper system operation:

   - Turn the ignition switch to ON (II); the SRS indicator should come on for about 6 seconds and then go off.
   - Make sure the horn works.

Front Passenger's Airbag Replacement

NOTE: If replacing the front passenger's airbag after deployment, refer to Component Replacement/ Inspection After Deployment (see page 24-181) for a complete list of other parts that must also be replaced.

Removal

1. Do the battery terminal disconnection procedure (see page 22-62), then wait at least 3 minutes before starting work.

2. Remove the glove box (see page 20-91).

3. Disconnect the front passenger's airbag 4P connector (A) from the dashboard wire harness.

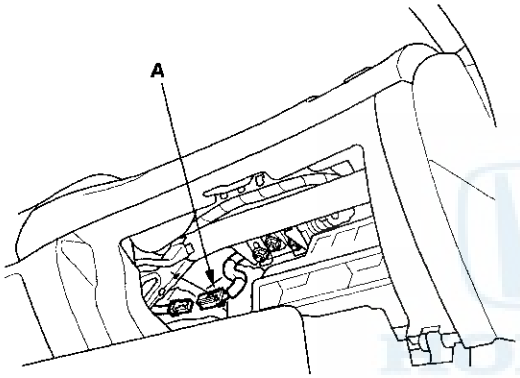

4. Remove the center panel:

   - Navigation unit, with navigation system;
     – '06-08 models (see page 23-143)
     – '09 model (see page 23-330)

   - Audio unit, without navigation system;
     – '06-08 models (see page 23-70)
     – '09 model (see page 23-232)

5. Remove the three mounting nuts (A) from the bracket. Cover the front passenger's lid and dashboard with a cloth, and pry carefully with a screwdriver to lift the front passenger's airbag assembly (B) out of the dashboard. If you replacing the front passenger's lid, go to step 6.

   NOTE: The front passenger's lid has pawls (C) on each side which attach it to the dashboard.

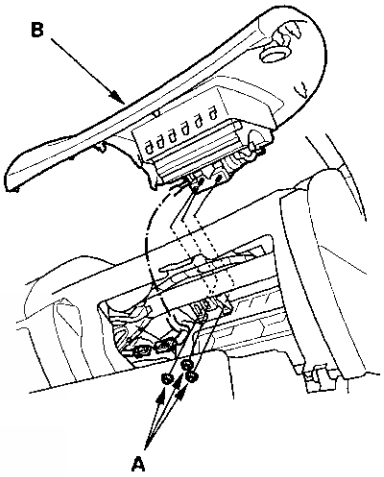

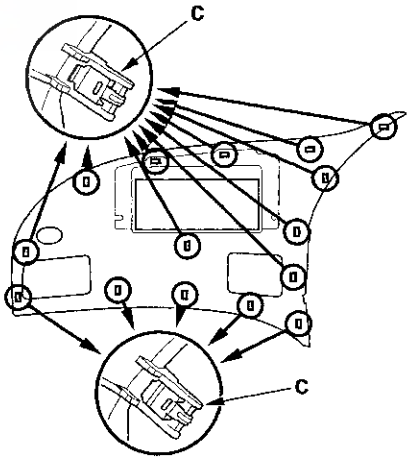

(cont'd)

Front Passenger's Airbag Replacement (cont'd)

6. Cut the four parts (A) of the front passenger's lid (B) as shown, and remove the front passenger's airbag.

   NOTE:
   - Always replace the front passenger's lid whenever you remove the front passenger's airbag from the lid.
   - Replace the front passenger's airbag if the airbag mounting hooks or its housing is damaged.

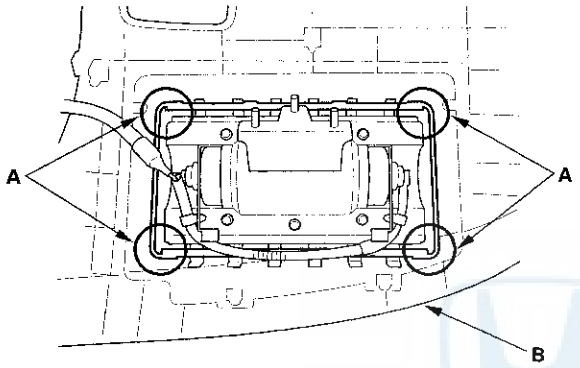

7. Insert the hooks (A) of the front passenger's airbag housing into the new front passenger's lid, then insert the other hooks (B) into the lid.

   NOTE:
   - Make sure there are no objects between the airbag and the front passenger's lid.
   - Make sure the airbag is fully seated, and make sure the front passenger's lid is not deformed or damaged after the airbag is in place.
   - Do not use tools when detaching the front passenger's airbag in order to protect it.

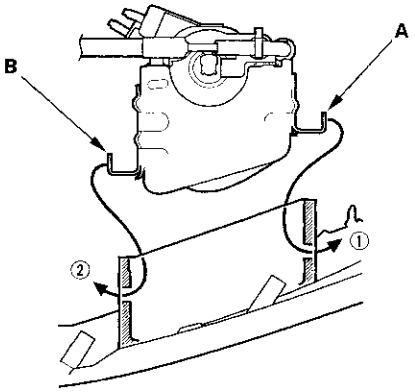

Installation

1. Place the front passenger's airbag assembly (A) into the dashboard. Tighten the front passenger's airbag mounting nuts (B).

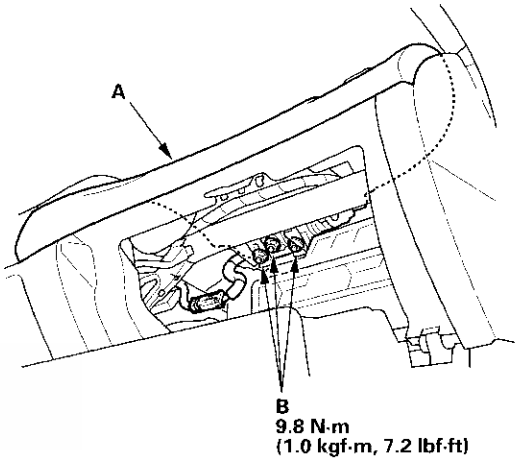

2. Connect the front passenger's airbag 4P connector (A) to dashboard wire harness, then reinstall the glove box and center panel.

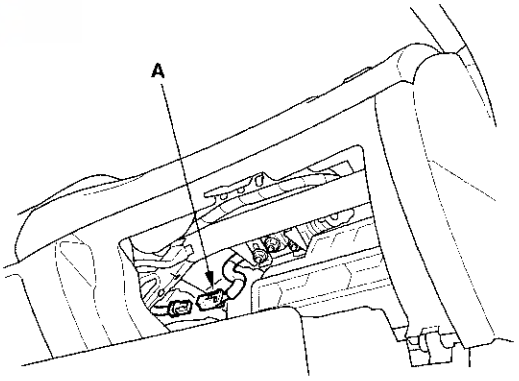

3. Do the battery terminal reconnection procedure (see page 22-62).

4. Clear any DTCs (see page 24-23).

5. After installing the airbag, confirm proper system operation: Turn the ignition switch to ON (II); the SRS indicator should come on for about 6 seconds and then go off.

Side Airbag Replacement

NOTE: If replacing the side airbag after deployment, refer to Component Replacement/Inspection After Deployment (see page 24-181) for a complete list of other parts that must also be replaced.

Removal

1. Do the battery terminal disconnection procedure (see page 22-62), then wait at least 3 minutes before starting work.

2. Remove the front seat assembly (see page 20-105) and seat-back cover (see page 20-110).

3. Remove the mounting screws (A) and the side airbag (B).

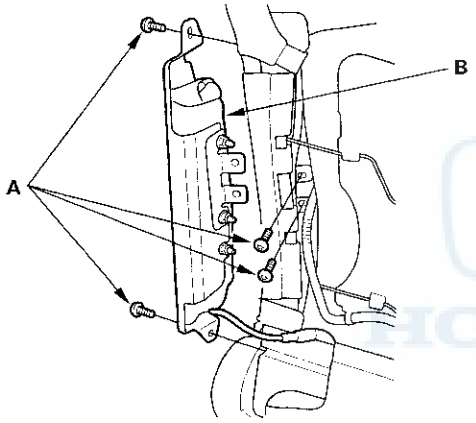

Installation

NOTE:
- If the side airbag lid is secured by tape, remove the tape.
- Do not open the lid of the side airbag cover.
- Use new mounting screws tightened to the specified torque. When you replace a side airbag, make sure that the seat-back cover is installed properly. Improper installation may prevent proper deployment.
- Be sure to install the harness wires so that they are not pinched or interfering with other parts.

1. Place the side airbag on the seat-back frame (A). Install new side airbag mounting screws (B).

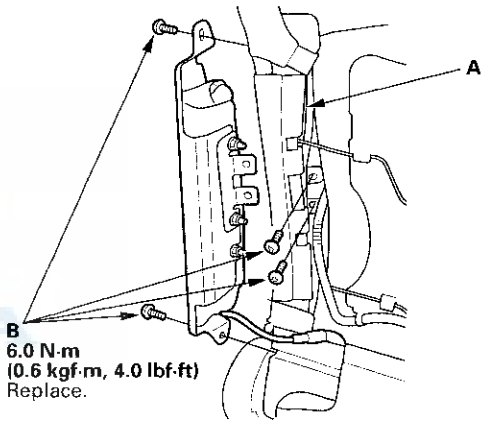

2. Install the seat-back cover (see page 20-110).

3. Install the front seat assembly (see page 20-105), then connect the side airbag harness 2P connector.

4. Move the front seat and the seat-back through their full ranges of movement, making sure the harness wires are not pinched or interfering with other parts.

5. Do the battery terminal reconnection procedure (see page 22-62).

6. Clear any DTCs (see page 24-23).

7. After installing the side airbag, confirm proper system operation: Turn the ignition switch to ON (II); the SRS indicator should come on for about 6 seconds and then go off.

Side Curtain Airbag Replacement

NOTE: If replacing the side curtain airbag after deployment, refer to Component Replacement/Inspection After Deployment (see page 24-181) for a complete list of other parts that must also be replaced.

Removal

NOTE:
- Review the interior trim replacement procedure before doing repair or service (see page 20-57).
- Removal of the side curtain airbag must be done according to the Precautions and Procedures (see page 24-13).
- The side curtain airbag system consists of the side curtain airbag module, including the roof trim, front grab handle, all grab handle brackets and shielding protector. After the side curtain airbag has been deployed, replace these parts (see page 24-181).

1. Do the battery terminal disconnection procedure (see page 22-62), then wait at least 3 minutes before starting work.

2. Remove the headliner (see page 20-71).

3. Disconnect the side curtain airbag 2P connector (A) from the floor wire harness.

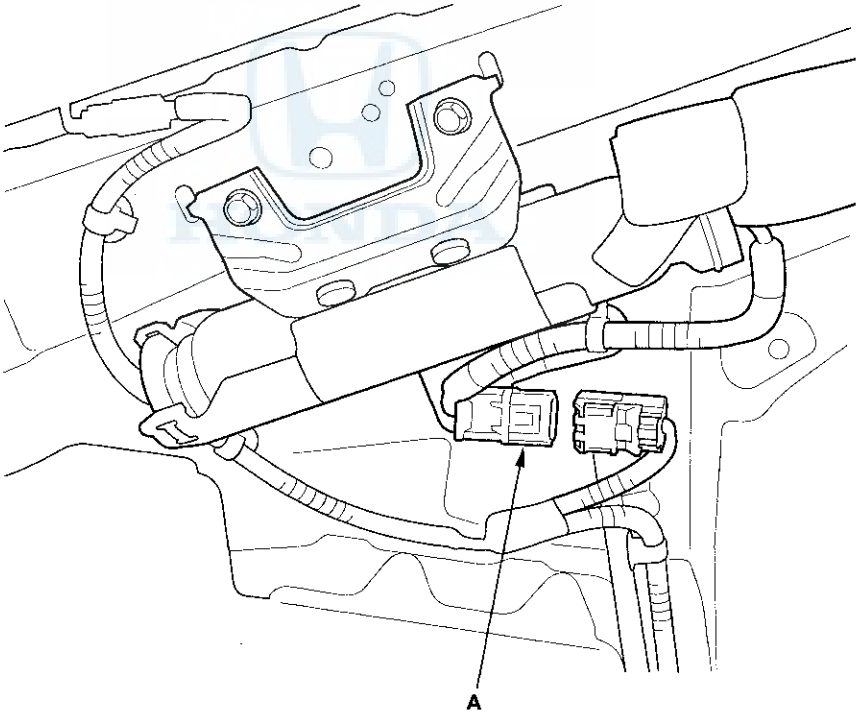

Left side shown; right side is similar.

4. Remove the mounting bolts (A) from the bracket.

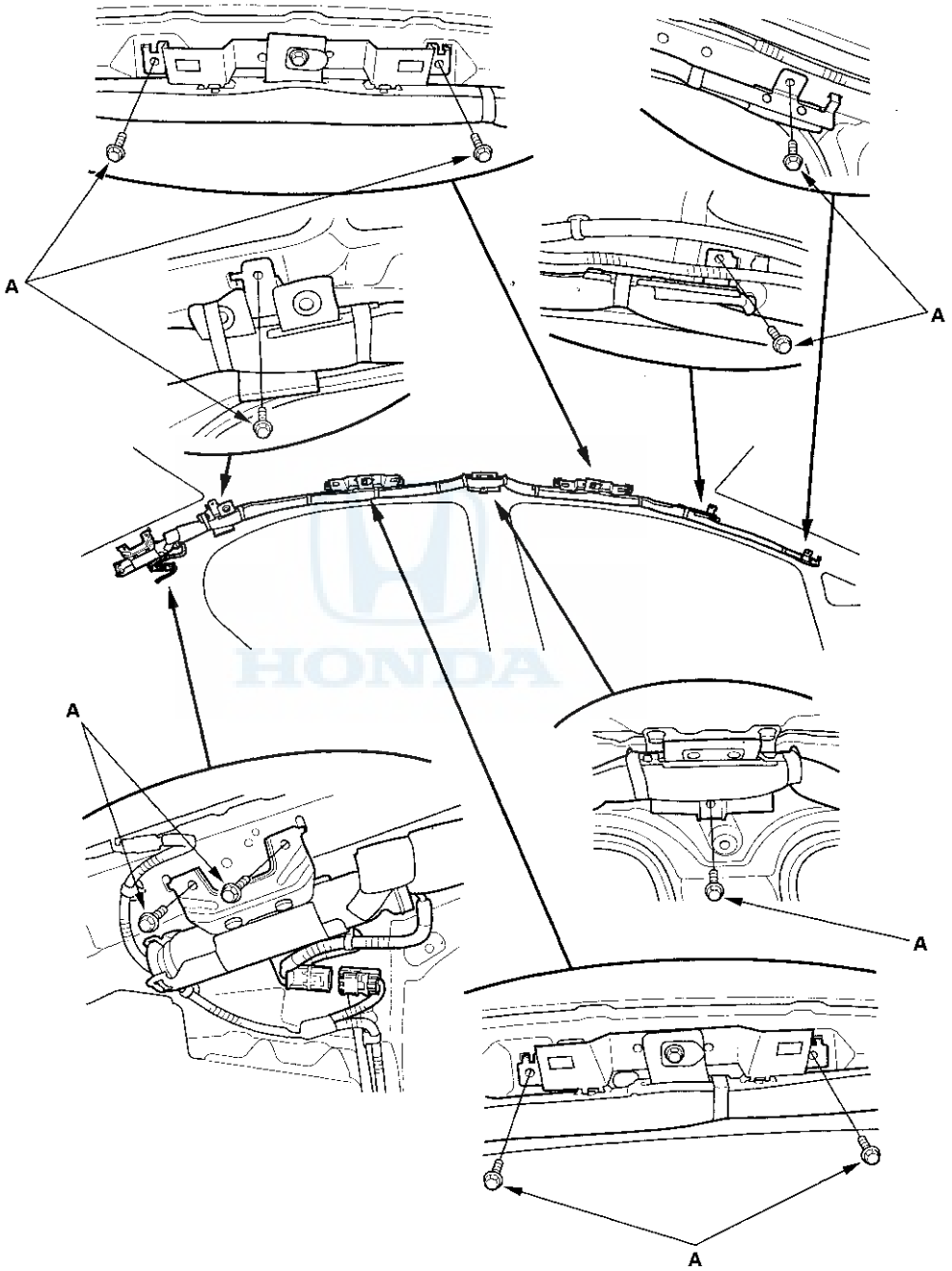

Left side shown; right side is similar.

(cont'd)

Side Curtain Airbag Replacement (cont'd)

Installation

NOTE:
- Installation of the side curtain airbag must be done according the Precautions and Procedures (see page 24-13).
- If the airbag is frayed, or has any other visible damage, replace it. Do not attempt to repair an airbag.
- When you install the airbag, make sure it is not twisted, and that it is not caught between the inflator bracket by the bracket bolts.
- Make sure that the side curtain airbag inflator retainer is installed properly. Otherwise the airbag could accidentally deploy and cause damage or injuries.
- If there is any damage to the side curtain airbag, do not try to repair it. Replace any damaged side curtain airbag.

1. Place the side curtain airbag assembly on the side of the roof. Tighten the side curtain airbag mounting bolts (A).

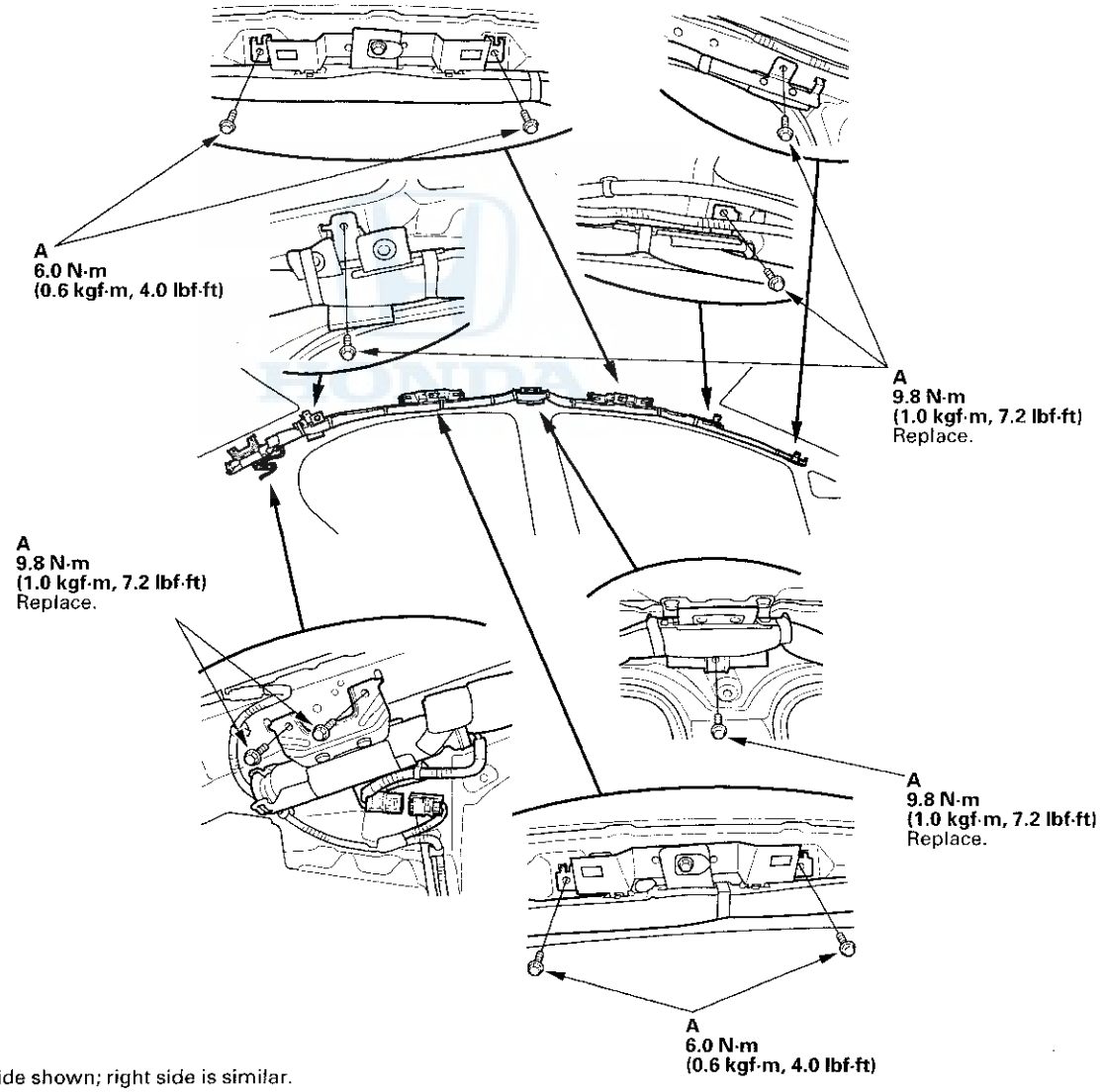

Left side shown; right side is similar.

2. Connect the side curtain airbag 2P connector (A) to the floor wire harness.

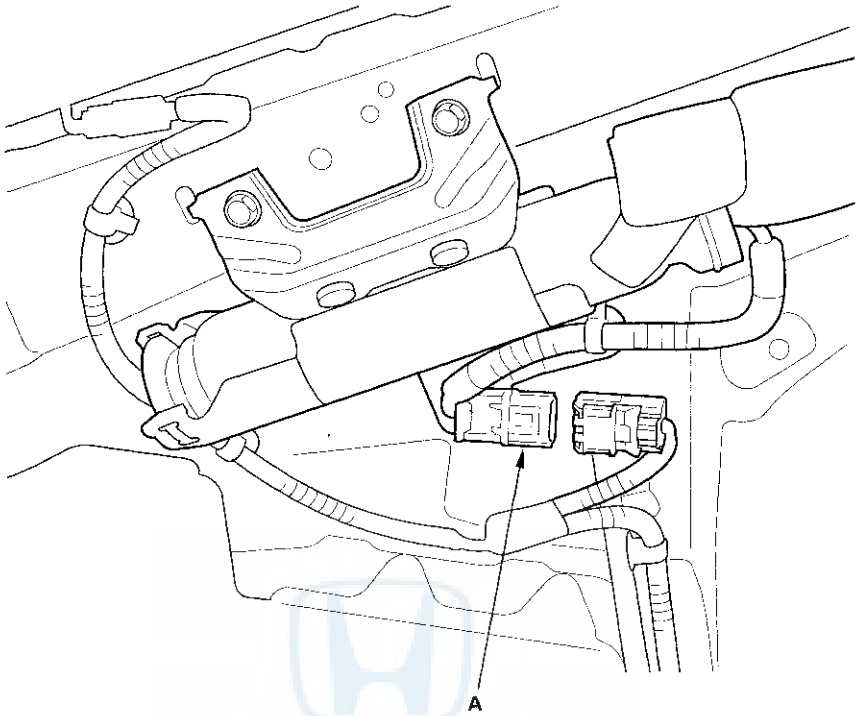

Left side shown; right side is similar.

3. Do the battery terminal reconnection procedure (see page 22-62).

4. Clear any DTCs (see page 24-23).

5. After installing the side curtain airbag, confirm proper system operation: Turn the ignition switch to ON (II); the SRS indicator should come on for about 6 seconds and then go off.

6. Install all removed parts.

7. Confirm proper headliner/pillar trim overlap (see page 24-183).

Airbag and Tensioner Disposal

Special Tools Required
Deployment tool 07HAZ-SG00500

Before scrapping any airbags, side airbags, side curtain airbags, seat belt tensioners, or seat belt buckle tensioner (including those in a whole vehicle to be scrapped), the part(s) must be deployed. If the vehicle is still within the warranty period, the Honda District Parts and Service Manager must give approval and/or special instructions before deploying the part(s). Only after the part(s) have been deployed (as the result of vehicle collision, for example), can they be scrapped.
If the parts appear intact (not deployed), treat them with extreme caution. Follow this procedure.

Deploying Airbags in the Vehicle

If an SRS equipped vehicle is to be entirely scrapped, its airbags, side airbags, side curtain airbags, seat belt tensioners, and seat belt buckle tensioner should be deployed while still in the vehicle. These parts should not be considered as salvageable parts and should never be installed in another vehicle.

1. Turn the ignition switch to LOCK (0), then disconnect the battery negative cable, then wait at least 3 minutes before starting work.

2. Confirm that each airbag, side airbag, side curtain airbag, seat belt tensioner, or seat belt buckle tensioner is securely mounted.

3. Confirm that the deployment tool is functioning properly by following the check procedure on the tool label.

Driver's Airbag

4. Remove the access panel (A) from the steering wheel then disconnect the driver's airbag 4P connector (B) from the cable reel.

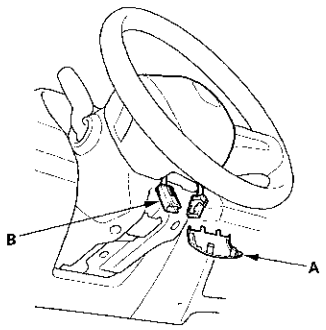

Front Passenger's Airbag

5. Remove the glove box, then disconnect the front passenger's airbag 4P connector (A) from the dashboard wire harness.

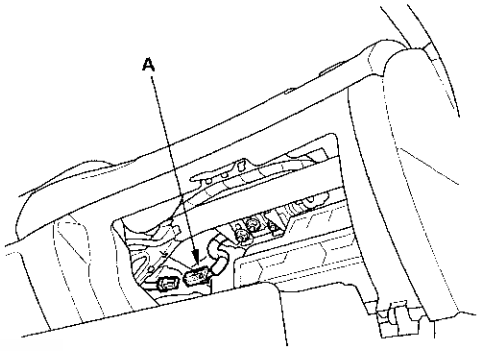

Side Airbag

6. Disconnect the side airbag 2P connector (A) from the floor wire harness.

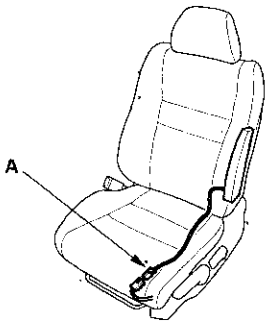

Side Curtain Airbag

7. Disconnect the floor wire harness 2P connectors (A) from the side curtain airbag.

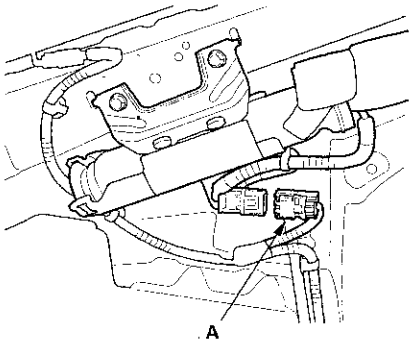

Seat Belt Tensioner

8. Disconnect the floor wire harness 4P connector (A) from the seat belt tensioner. Pull the seat belt out all the way and cut it.

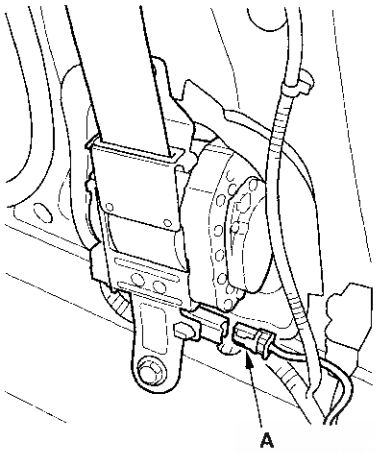

Seat Belt Buckle Tensioner

9. Disconnect the floor wire harness tensioner 4P connector (A) from the seat belt buckle tensioner.

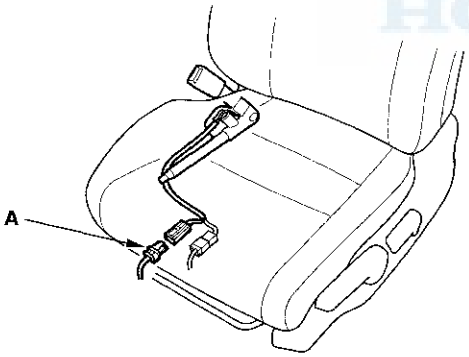

10. Cut off each connector, and strip the ends of the wires. Twist each pair of unlike colored wires together, and clip an alligator clips (A) from the deployment tool to each pair.

NOTE:
- Place the deployment tool at least 30 ft (10 m) away from the vehicle.
- The driver's and front passenger's airbags have dual inflators. Twist each pair of unlike colored wires together, and clip an alligator clip to each pair.

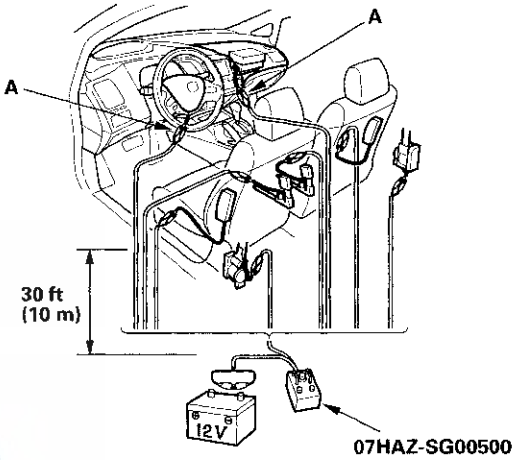

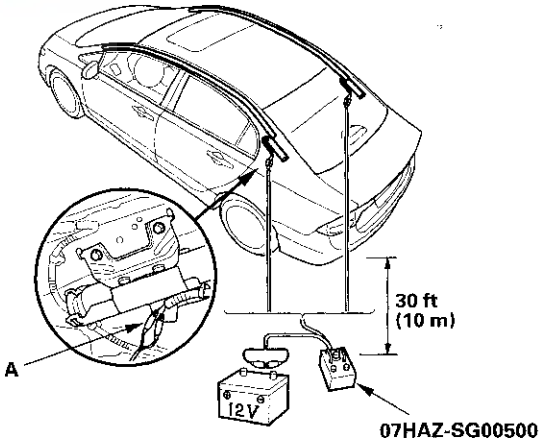

(cont'd)

Airbag and Tensioner Disposal (cont'd)

11. Connect a 12 V battery to the tool.

    - If the green light on the tool comes on, the igniter circuit is defective and cannot deploy the component. Go to Disposal of Damaged Components.
    - If the red light on the tool comes on, the component is ready to be deployed.

12. Push the tool's deployment switch. The airbags and tensioners should deploy (deployment is both highly audible and visible: A loud noise and rapid inflation of the bag, followed by slow deflation).

    - If the components deploy and the green light on the tool comes on, continue with this procedure.
    - If a component does not deploy, and the green light comes ON, its igniter is defective. Go to Disposal of Damaged Components.
    - During deployment, the airbags can become hot enough to burn you. Wait 30 minutes after deployment before touching the airbags.

13. Dispose of the complete airbag. No part of it can be reused. Place it in a sturdy plastic bag (A), and seal it securely. Dispose of the deployed airbag according to your local regulations.

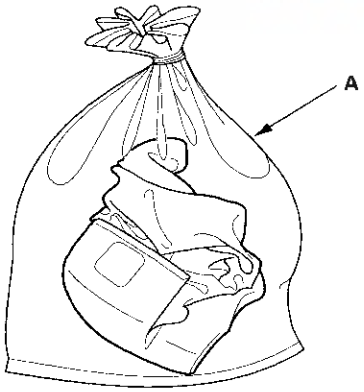

Deploying Components Out of the Vehicle

If an intact airbag or tensioner has been removed from a scrapped vehicle, or has been found defective or damaged during transit, storage, or service, it should be deployed as follows:

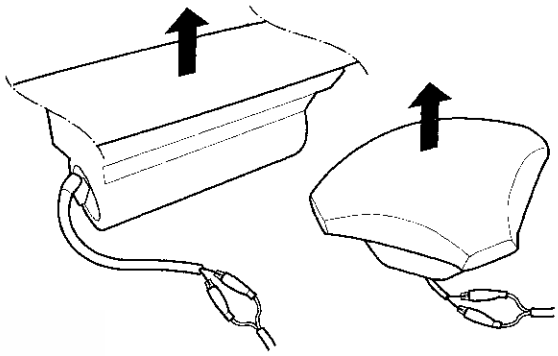

1. Confirm that the deployment tool is functioning properly by following the check procedure Deploying Airbags in the Vehicle on the tool label.

2. Position the airbag face up, outdoors, on flat ground, at least 30 ft (10 m) from any obstacles or people.

3. Follow steps 9 through 12 of the in-vehicle deployment procedure.

   NOTE: The driver's and front passenger's airbags have dual inflators. Twist each pair of unlike colored wires together, and clip an alligator clip to each pair.

Disposal of Damaged Components

1. If installed in a vehicle, follow the removal procedure for the driver's airbag (see page 24-184), front passenger's airbag (see page 24-185), side airbag (see page 24-187), side curtain airbag (see page 24-188), seat belt tensioner (see page 24-4), and seat belt buckle tensioner (see page 24-6).

2. In all cases, make a short circuit by cutting, stripping, and twisting together the two inflator wires.

   NOTE: The driver's and front passenger's airbags have dual inflators. The like color wires go to the individual inflators.

3. Package the component in exactly the same packaging that the new replacement part came in.

4. Mark the outside of the box DAMAGED AIRBAG NOT DEPLOYED, DAMAGED SIDE AIRBAG NOT DEPLOYED, DAMAGED SIDE CURTAIN AIRBAG NOT DEPLOYED, or DAMAGED SEAT BELT TENSIONER NOT DEPLOYED so it does not get confused with your parts stock.

5. Contact your Honda District Parts and Service Manager for instructions on how and where to return it for disposal.

Deployment Tool Check

1. Connect the yellow clips to both switch protector handles on the tool.

2. Then connect the red lead to the positive battery post and the black lead to the negative battery post.

3. Push the operation switch: The green light should come on, indicating that the tool is operating properly and is ready for use. If the red light stays on, the tool is faulty, and another one must be used for the procedure.

4. Disconnect the tool clips and connectors from the protector handles and the battery.

Cable Reel Replacement

Removal

1. Make sure the front wheels are aligned straight ahead.

2. Do the battery terminal disconnection procedure (see page 22-62), then wait at least 3 minutes before starting work.

3. Remove the driver's airbag (see page 24-184).

4. Disconnect the connector (A) from the cable reel, then remove the steering wheel bolt (B).

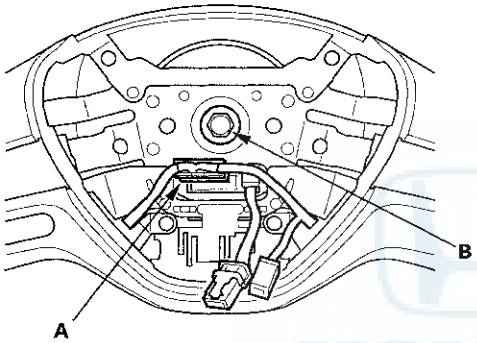

5. Confirm that the front wheels point straight ahead, then remove the steering wheel with a steering wheel puller (see step 6 on page 17-6).
   Do not tap on the steering wheel or steering column shaft when removing the steering wheel.

6. Remove the driver's undercover (see page 20-90).

7. Remove the column cover screws (A), then remove the column covers (B, C).

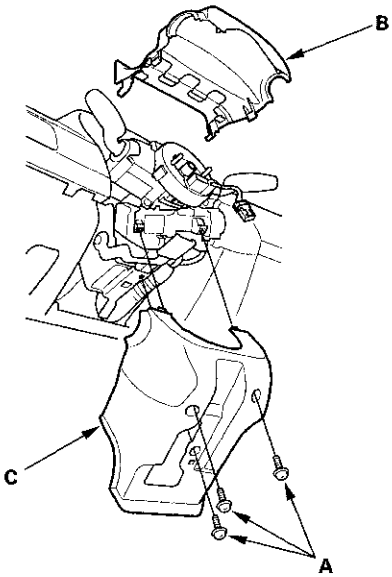

8. Disconnect the dashboard wire harness 4P connector (A) from the cable reel 4P connector (B), then disconnect the dashboard wire harness 20P connector (C) from the cable reel (D).

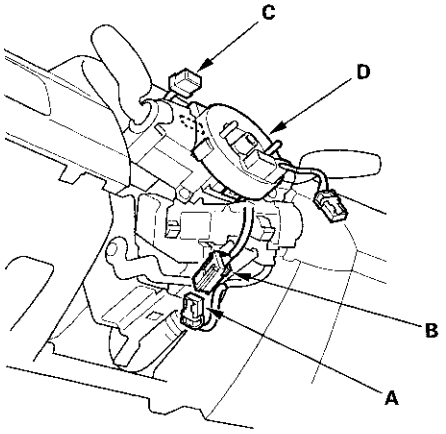

9. Release the lock tab (A) under the cable reel connector with a 90 ° hook shaped tool (B). Slide the tool below the cable reel connector just above the lock tab. Release the lower lock tab (C), and slide the cable reel off the column.

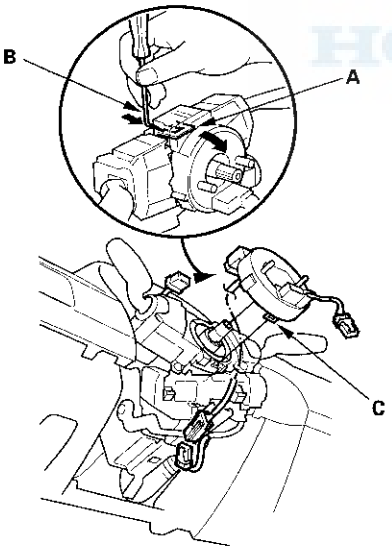

Installation

1. Before installing the steering wheel, align the front wheels straight ahead.

2. If not already done, disconnect the battery negative cable, then wait at least 3 minutes before starting work.

3. Set the turn signal canceling sleeve (A) so that the projections (B) are aligned vertically.

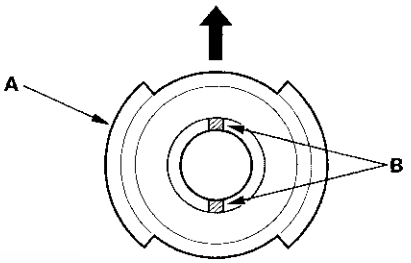

4. Carefully install the cable reel (A) on the steering column shaft. Then connect the dashboard wire harness 20P connector (B) to the cable reel, and connect the cable reel 4P connector (C) to the dashboard wire harness 4P connector (D).

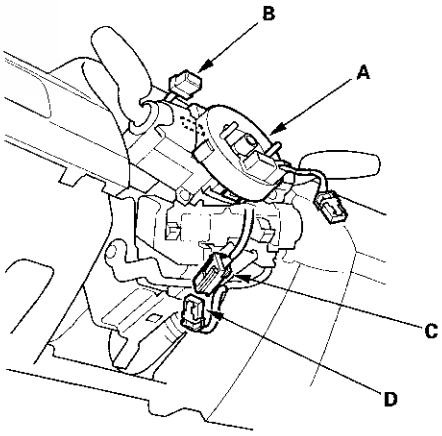

(cont'd)

Cable Reel Replacement (cont'd)

5. Install the steering column covers.

6. If necessary, center the cable reel (new replacement cable reels come centered). Do this by first rotating the cable reel clockwise until it stops. Then rotate it counterclockwise (about three turns) until the arrow mark (A) on the cable reel label points straight up.

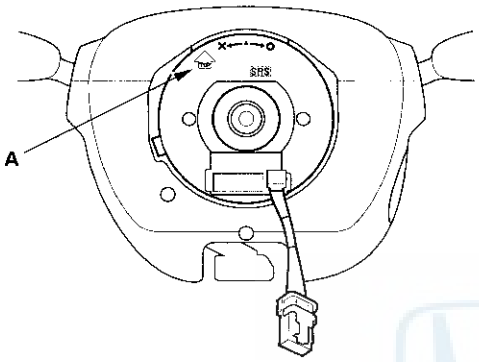

7. Position the two tabs (A) of the turn signal canceling sleeve (B) as shown, and install the steering wheel on to the steering column shaft, making sure the steering wheel hub (C) engages the pins (D) of the cable reel and tabs of the turn signal canceling sleeve. Do not tap on the steering wheel or steering column shaft when installing the steering wheel.

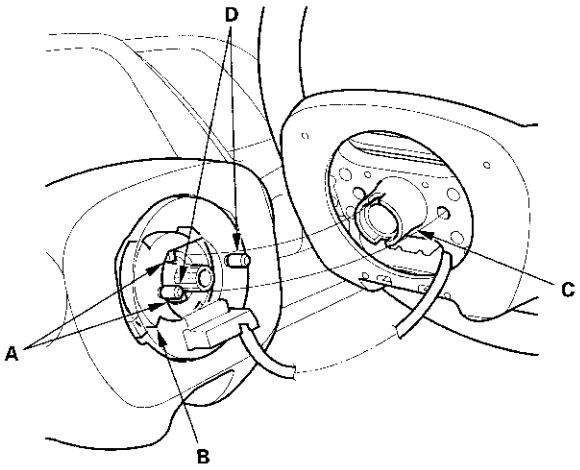

8. Install a new steering wheel bolt (A), then reconnect the connectors.

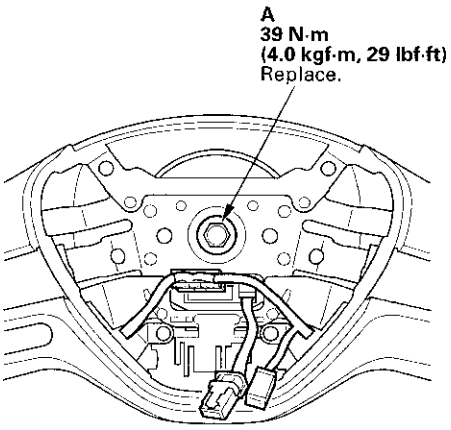

9. Install the driver's airbag (see page 24-184).

10. Do the battery terminal reconnection procedure (see page 22-62).

11. Clear any DTCs (see page 24-23).

12. After installing the cable reel, confirm proper system operation:

    - Turn the ignition switch to ON (II); the SRS indicator should come on for about 6 seconds and then go off.
    - After the SRS indicator has turned off, turn the steering wheel fully left and right to confirm the SRS indicator does not come on.
    - Make sure the horn and turn signal switches work properly.
    - Make sure the steering wheel switches work properly.

SRS Unit Replacement

Removal

NOTE: If you are only disconnecting SRS unit connector A, skip step 2.

1. Do the battery terminal disconnection procedure (see page 22-62), then wait at least 3 minutes before starting work.

2. Disconnect both seat belt tensioner 4P connectors (see step 7 on page 24-21) and both seat belt buckle tensioner 4P connectors (see step 8 on page 24-21).

3. Remove the center console (see page 20-79).

4. Disconnect SRS unit connector A (28P), B (28P), and remove the TORX bolts (C), then pull out the SRS unit.

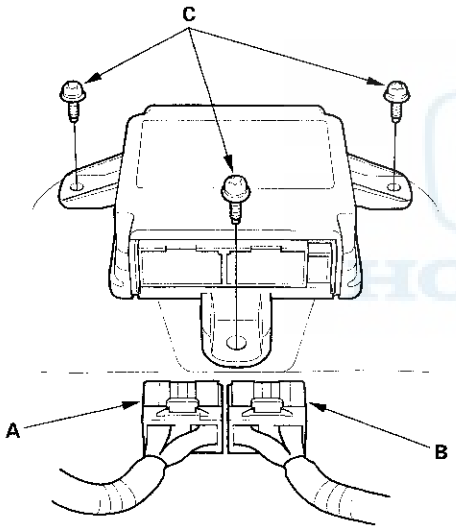

Installation

1. Install the SRS unit (A) with new TORX bolts (B), then connect the connectors (C) to the SRS unit; push them into position until they click.

   NOTE: Be sure the SRS unit is sitting squarely against its bracket before torquing the TORX bolt.

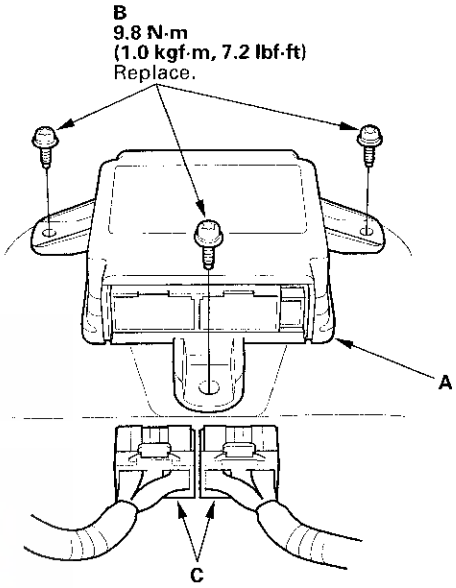

2. Do the battery terminal reconnection procedure (see page 22-62).

3. Calibrate the ODS unit (see page 24-27).

4. Do the ODS unit operation check (see page 24-28).

5. Confirm proper SRS system operation: Turn the ignition switch to ON (II); the SRS indicator should come on for about 6 seconds and then go off.

6. Reinstall all removed parts.

Side Impact Sensor (First) Replacement

Removal

1. Do the battery terminal disconnection procedure (see page 22-62), then wait at least 3 minutes before starting work.

2. Remove the front seat assembly (see page 20-105).

3. Remove the front door sill inner trim (see page 20-55).

4. Remove the lower B-pillar lower trim panel (see page 20-60).

5. Disconnect the floor wire harness 4P connector (A) from the side impact sensor (first).

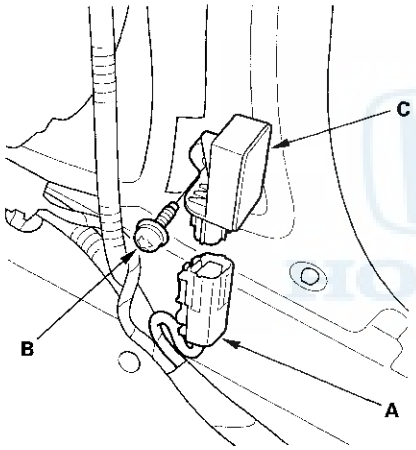

6. Using a TORX T30 bit, remove the TORX bolt (B), then remove the side impact sensor (first) (C).

Installation

1. Install the side impact sensor (first) (A) with a new TORX bolt (B), then connect the floor wire harness 4P connector (C) to the side impact sensor (first).

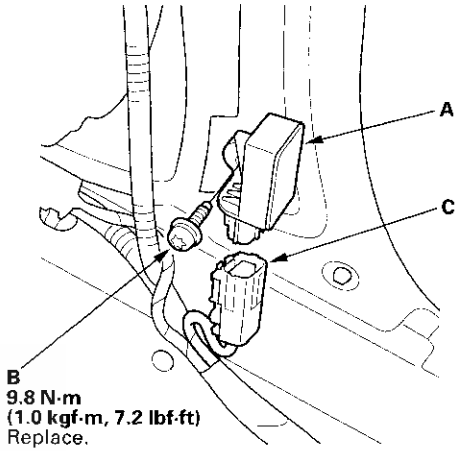

2. Reinstall all removed parts.

3. Do the battery terminal reconnection procedure (see page 22-62).

4. Clear any DTCs (see page 24-23).

5. After installing the side impact sensor (first) confirm proper system operation: Turn the ignition switch to ON (II); the SRS indicator should come on for about 6 seconds and then go off.

Side Impact Sensor (Second) Replacement

Removal

1. Do the battery terminal disconnection procedure (see page 22-62), then wait at least 3 minutes before starting work.

2. Remove the rear seat and seat side bolster (see page 20-118).

3. Disconnect the floor wire harness 2P connector (A) from the side impact sensor (second).

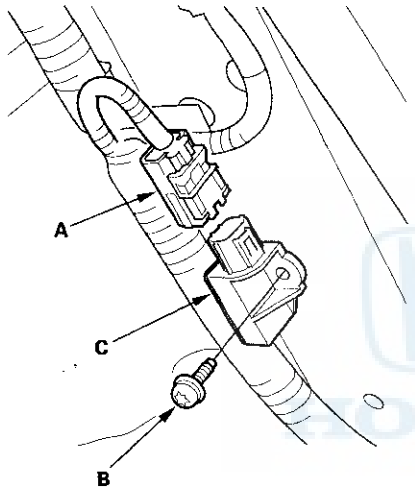

4. Remove the TORX bolt (B) using a TORX T30 bit, then remove the side impact sensor (second) (C).

Installation

1. Install the side impact sensor (second) (A) with a new TORX bolt (B), then connect floor wire harness 2P connector (C) to the side impact sensor (second).

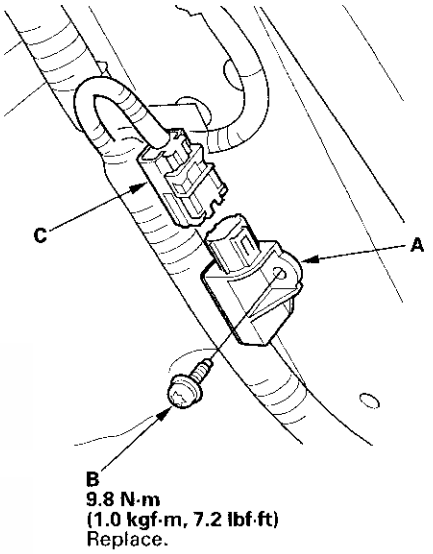

2. Do the battery terminal reconnection procedure (see page 22-62).

3. Clear any DTCs (see page 24-23).

4. After installing the side impact sensor (second), confirm proper system operation: Turn the ignition switch to ON (II); the SRS indicator should come on for about 6 seconds and then go off.

5. Reinstall all removed parts.

Rear Safing Sensor Replacement

Removal

1. Do the battery terminal disconnection procedure (see page 22-62), then wait at least 3 minutes before starting work.

2. Remove the rear seat (see page 20-118).

3. Disconnect the floor wire harness 4P connector (A) from the rear safing sensor.

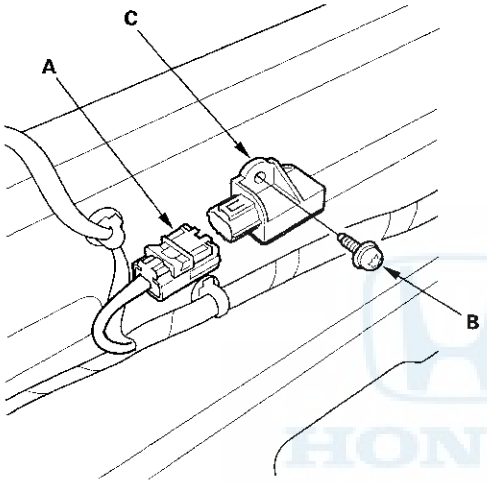

4. Using a TORX T30 bit, remove the TORX bolt (B), then remove the rear safing sensor (C).

Installation

1. Install the rear safing sensor (A) with a new TORX bolt (B) then connect the floor wire harness 4P connector (C) to the rear safing sensor.

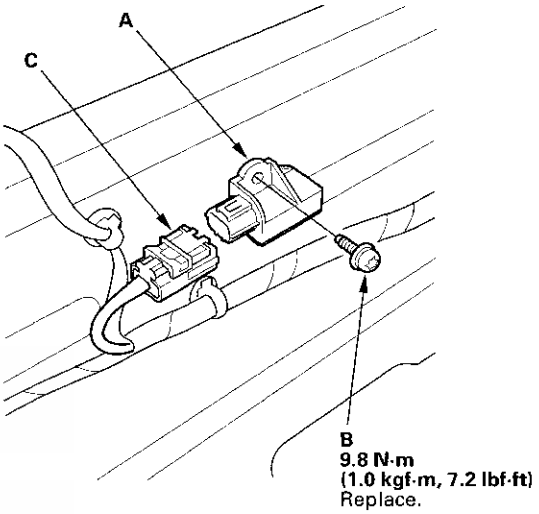

2. Do the battery terminal reconnection procedure (see page 22-62).

3. Clear any DTCs (see page 24-23).

4. After installing the rear safing sensor, confirm proper system operation: Turn the ignition switch to ON (II); the SRS indicator should come on for about 6 seconds and then go off.

5. Reinstall all removed parts.

Front Passenger's Weight Sensor Replacement

Special Tools Required
Pin driver, 3.5 mm 07744-0010300

Removal

NOTE: Removal of the front passenger's weight sensors must be done according to Precautions and Procedures (see page 24-13).

1. Do the battery terminal disconnection procedure (see page 22-62), then wait at least 3 minutes before starting work.

2. Remove the front passenger's seat assembly (see page 20-105).

3. Remove the cushion cover/pad from the seat cushion frame (see page 20-114).

4. Using a TORX E18 socket, remove the TORX nuts (A) attaching the seat track (B) to the front passenger's seat slide assembly including all four front passenger's weight sensors (C).

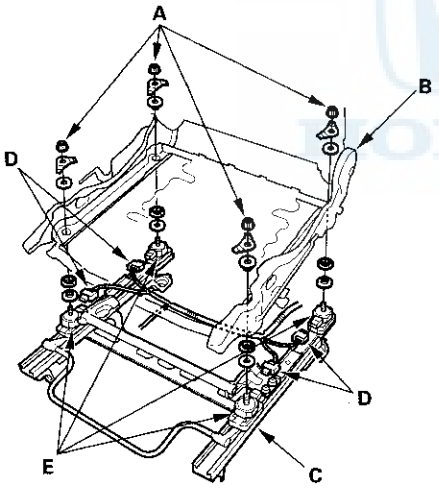

5. Disconnect the sensor connectors (D) from the seat weight sensors (E), then remove the front passenger's weight sensors.

Installation

NOTE: Be sure to install the harness wires so they are not pinched or interfering with other parts.

1. Install the new front passenger's seat slide assembly including all four front passenger's weight sensors under the seat track.

2. Apply multipurpose grease to the spring washer and bushing.

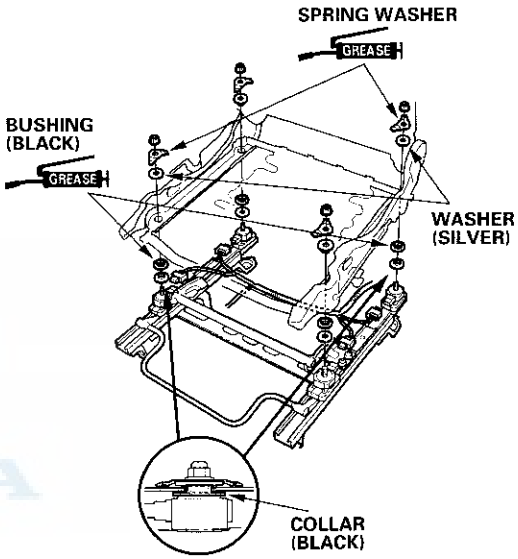

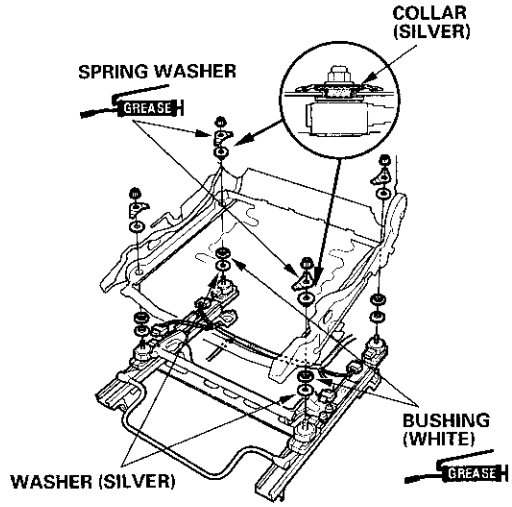

(cont'd)

Front Passenger's Weight Sensor Replacement (cont'd)

3. Insert a 3.5 mm center punch into the hole in the cushion frame to position the spring washers, when tighten the TORX nuts (A). Begin with ①, and tighten them in crisscross pattern in two or more steps.

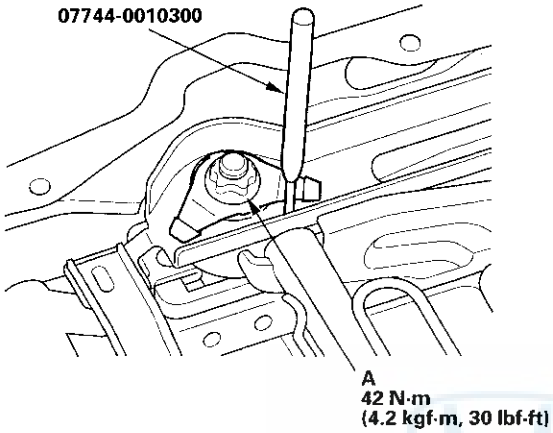

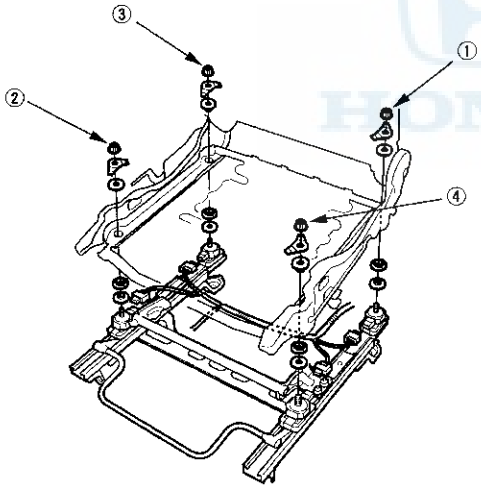

4. Using the pin driver to position the spring washers, torque the TORX nuts is the sequence shown in two or more steps.

5. Make sure the gap between the spring washer (A) and the seat track (B) is more than 4 mm (0.2 in.), as shown.

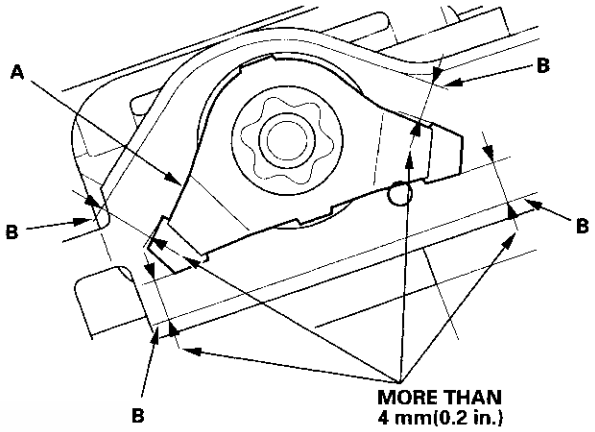

6. Reassemble the front passenger's seat cushion cover/pad (see page 20-114).

7. Reinstall the front passenger's seat (see page 20-105).

8. Do the battery terminal reconnection procedure (see page 22-62).

9. Clear any DTCs (see page 24-23).

10. Calibrate the ODS unit (see page 24-27).

11. After installing the front passenger's weight sensors, confirm proper system operation: Turn the ignition switch to ON (II); the SRS indicator should come on for about 6 seconds and then go off.

ODS Unit Replacement

Removal

1. Do the battery terminal disconnection procedure (see page 22-62), then wait at least 3 minutes before starting work.

2. Remove the front passenger's seat assembly (see page 20-105) and seat-back cover (see page 20-110).

3. Disconnect the ODS unit 18P connector (A) and sensor connectors (B) from the ODS unit (C).

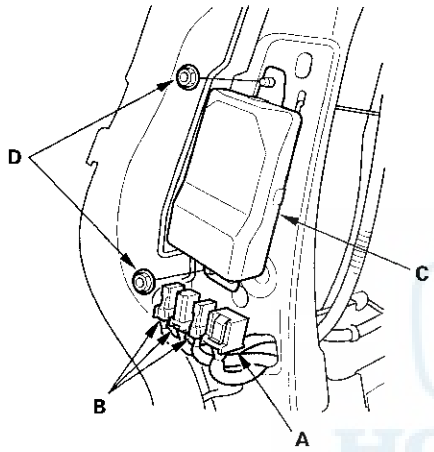

4. Remove the two nuts (D) and the ODS unit.

Installation

1. Place the ODS unit (A) on the seat-back frame. Tighten the two nuts (B), and connect the ODS unit harness 18P connector (C) and OPDS sensor connectors (D) to the ODS unit.

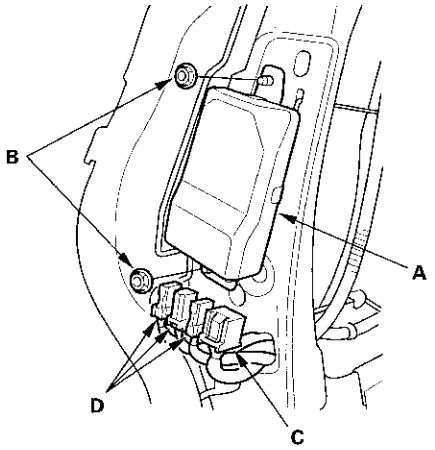

2. Install the seat-back cover in the reverse order of removal.

3. Install the front passenger's seat assembly (see page 20-105).

4. Do the battery terminal reconnection procedure (see page 22-62).

5. Set the seat-back in the normal position, and make sure there is nothing on the front passenger's seat.

6. Clear any DTCs (see page 24-23).

7. Initialize the ODS unit (see page 24-26).

8. After installing the ODS unit, confirm proper system operation: Turn the ignition switch to ON (II); the SRS indicator should come on for about 6 seconds and then go off.

Front Impact Sensor Replacement

Removal

1. Do the battery terminal disconnection procedure (see page 22-62), then wait at least 3 minutes before starting work.

2. Remove the front inner fender (see page 20-147).

3. Disconnect the engine compartment wire harness 2P connector (A). Using a TORX T30 bit, remove the TORX bolt (B), then remove the front impact sensor (C). Replace the bolt.

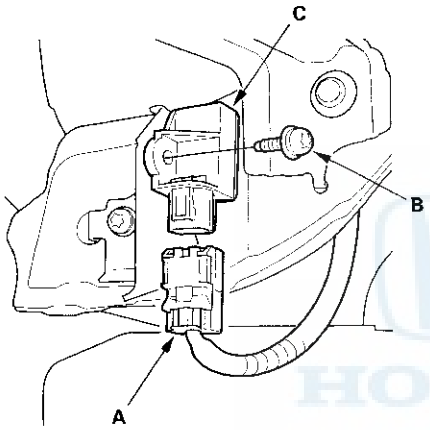

Installation

1. Install the front impact sensor with a new TORX bolt (A), then connect the engine compartment wire harness 2P connector (B) to the front impact sensor (C).

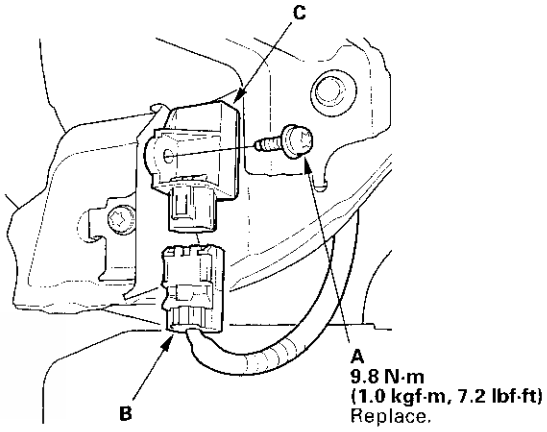

2. Do the battery terminal reconnection procedure (see page 22-62).

3. Clear any DTCs (see page 24-23).

4. After installing the front impact sensor, confirm proper system operation: Turn the ignition switch to ON (II); the SRS indicator should come on for about 6 seconds and then go off.

5. Reinstall all removed parts.

Driver's Seat Position Sensor Replacement

Removal

NOTE:
- Removal of the driver's seat position sensor must be done according Precautions and Procedures (see page 24-13).
- Do not turn the ignition switch to ON (II), and do not connect the battery cable while removing the driver's seat position sensor.

1. Do the battery terminal disconnection procedure (see page 22-62), then wait at least 3 minutes before starting work.

2. Remove the driver's seat assembly (see page 20-105).

3. Disconnect the seat position sensor harness 2P connector (A) from the driver's seat position sensor (B).

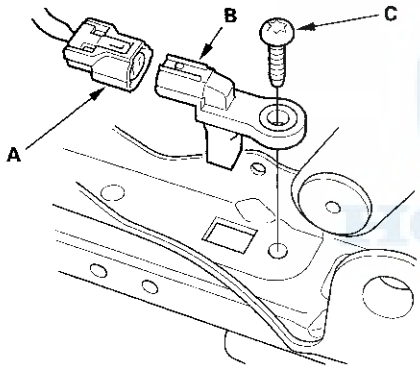

4. Using a TORX T30 bit, remove the TORX bolt (C), then remove the driver's seat position sensor.

Installation

NOTE:
- Be sure to install the harness so it does not get pinched or interfere with other parts.
- Do not turn the ignition switch to ON (II), and do not connect the battery cable while installing the driver's seat position sensor.
- After installing the driver's seat position sensor, make sure it is clean. Keep it away from dust.

1. Install the new driver's seat position sensor with a new TORX bolt (A), then connect the seat position sensor harness 2P connector (B) to the driver's seat position sensor (C).

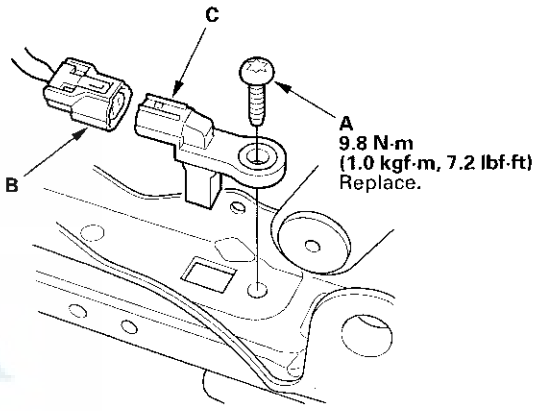

2. Install the driver's seat assembly (see page 20-105).

3. Do the battery terminal reconnection procedure (see page 22-62).

4. Clear any DTCs (see page 24-23).

5. Check the operation of the driver's seat position sensor with the HDS (see page 24-29).

Passenger's Airbag Cutoff Indicator Illumination Bulb Test/Replacement

1. Remove the center panel:

   - Navigation unit, with navigation system;
     - '06-08 models (see page 23-143)
     - '09 model (see page 23-330)

   - Audio unit, without navigation system;
     - '06-08 models (see page 23-70)
     - '09 model (see page 23-232)

2. Remove the screws (A) and the passenger's airbag cutoff indicator (B) from the center panel.

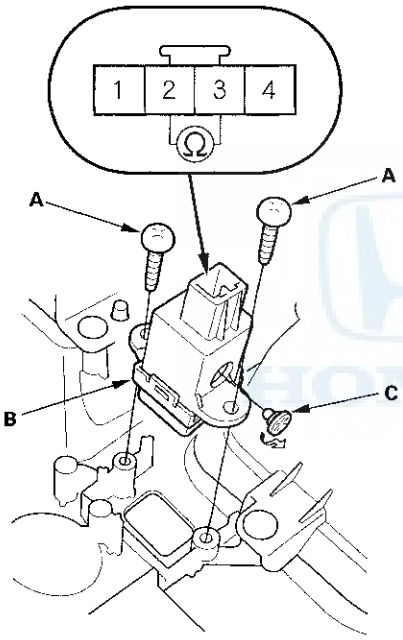

3. Check for continuity between the No. 2 and No. 3 terminals of the indicator. If there is no continuity, replace the bulb (c).

4. Reinstall the parts in the reverse order of removal.

" Portions of materials contained herein have been reprinted under license from America Honda Motor Co., Inc. License Agreement AH220 ."