HYUNDAI

H-1 / Grand Starex

OWNER'S MANUAL

Operation
Maintenance
Specifications

All information in this Owner's Manual is current at the time of publication. However, Hyundai reserves the right to make changes at any time so that our policy of continual product improvement may be carried out.

This manual applies to all models of this vehicle and includes descriptions and explanations of optional as well as standard equipment. As a result, you may find material in this manual that does not apply to your specific vehicle.

Please note that some models are equipped with Right-Hand Drive (RHD). The explanations and illustrations for some operations in RHD models are opposite of those written in this manual.

CAUTION: MODIFICATIONS TO YOUR HYUNDAI

Your Hyundai should not be modified in any way. Such modifications may adversely affect the performance, safety or durability of your Hyundai and may, in addition, violate conditions of the limited warranties covering the vehicle. Certain modifications may also be in violation of regulations established by the Department of Transportation and other government agencies in your country.

TWO-WAY RADIO OR CELLULAR TELEPHONE INSTALLATION

Your vehicle is equipped with electronic fuel injection and other electronic components. It is possible for an improperly installed/adjusted two-way radio or cellular telephone to adversely affect electronic systems. For this reason, we recommend that you carefully follow the radio manufacturer's instructions or consult your Hyundai dealer for precautionary measures or special instructions if you choose to install one of these devices.

SAFETY AND VEHICLE DAMAGE WARNING

This manual includes information titled as WARNING, CAUTION and NOTICE.
These titles indicate the following:

⚠ WARNING
This indicates that a condition may result in harm, serious injury or death to you or other persons if the warning is not heeded. Follow the advice provided with the warning.

⚠ CAUTION
This indicates that a condition may result in damage to your vehicle or its equipment if the caution is not heeded. Follow the advice provided with the caution.

✻ NOTICE
This indicates that interesting or helpful information is being provided.

FOREWORD

Thank you for choosing Hyundai. We are pleased to welcome you to the growing number of discriminating people who drive Hyundais. The advanced engineering and high-quality construction of each Hyundai we build is something of which we're very proud.

Your Owner's Manual will introduce you to the features and operation of your new Hyundai. It is suggested that you read it carefully because the information it contains can contribute greatly to the satisfaction you receive from your new car.

The manufacturer also recommends that all service and maintenance on your car be performed by an authorized Hyundai dealer. Hyundai dealers are prepared to provide high-quality service, maintenance and any other assistance that may be required.

HYUNDAI MOTOR COMPANY

Note : Because future owners will also need the information included in this manual, if you sell this Hyundai, please leave the manual in the vehicle for their use. Thank you.

⚠ CAUTION

Severe engine and transmission damage may result from the use of poor quality fuels and lubricants that do not meet Hyundai specifications. You must always use high quality fuels and lubricants that meet the specifications listed on Page 9-4 in the Vehicle Specifications section of the Owner's Manual.

Copyright 2012 Hyundai Motor Company. All rights reserved. No part of this publication may be reproduced, stored in any retrieval system or transmitted in any form or by any means without the prior written permission of Hyundai Motor Company.

TABLE OF CONTENTS

Introduction	1
Your vehicle at a glance	2
Safety features of your vehicle	3
Features of your vehicle	4
Driving your vehicle	5
What to do in an emergency	6
Maintenance	7
Consumer information	8
Specifications	9
Index	I

Introduction

1

How to use this manual / 1-2
Fuel requirements / 1-2
Vehicle handling instructions / 1-6
Vehicle break-in process / 1-6
Indicator symbols on the instrument cluster / 1-7

HOW TO USE THIS MANUAL

A010000AUN

We want to help you get the greatest possible driving pleasure from your vehicle. Your Owner's Manual can assist you in many ways. We strongly recommend that you read the entire manual. In order to minimize the chance of death or injury, you must read the WARNING and CAUTION sections in the manual.

Illustrations complement the words in this manual to best explain how to enjoy your vehicle. By reading your manual, you learn about features, important safety information, and driving tips under various road conditions.

The general layout of the manual is provided in the Table of Contents. A good place to start is the index; it has an alphabetical listing of all information in your manual.

Sections: This manual has nine sections plus an index. Each section begins with a brief list of contents so you can tell at a glance if that section has the information you want.

You will find various WARNINGs, CAUTIONs, and NOTICEs in this manual. These WARNINGs were prepared to enhance your personal safety. You should carefully read and follow ALL procedures and recommendations provided in these WARNINGs, CAUTIONs and NOTICEs.

⚠ WARNING

A WARNING indicates a situation in which harm, serious bodily injury or death could result if the warning is ignored.

⚠ CAUTION

A CAUTION indicates a situation in which damage to your vehicle could result if the caution is ignored.

✻ NOTICE

A NOTICE indicates interesting or helpful information is being provided.

FUEL REQUIREMENTS

Gasoline engine

A020101AEN

Unleaded

Your new Hyundai vehicle is designed to use only unleaded fuel having an Octane Rating of RON (Research Octane Number) 91/AKI (Anti-Knock Index) 87 or higher.

Your new vehicle is designed to obtain maximum performance with UNLEADED FUEL, as well as minimize exhaust emissions and spark plug fouling.

⚠ CAUTION

NEVER USE LEADED FUEL. The use of leaded fuel is detrimental to the catalytic converter and will damage the engine control system's oxygen sensor and affect emission control.

Never add any fuel system cleaning agents to the fuel tank other than what has been specified. (Consult an authorized HYUNDAI dealer for details.)

⚠ WARNING

- **Do not "top off" after the nozzle automatically shuts off when refueling.**
- **Always check that the fuel cap is installed securely to prevent fuel spillage in the event of an accident.**

A020102AEN

Leaded (if equipped)

For some countries, your vehicle is designed to use leaded gasoline. When you are going to use leaded gasoline, ask to an authorized HYUNDAI dealer whether leaded gasoline in your vehicle is available or not.

Octane Rating of leaded gasoline is same with unleaded one.

A020103AUN

Gasoline containing alcohol and methanol

Gasohol, a mixture of gasoline and ethanol (also known as grain alcohol), and gasoline or gasohol containing methanol (also known as wood alcohol) are being marketed along with or instead of leaded or unleaded gasoline.

Do not use gasohol containing more than 10% ethanol, and do not use gasoline or gasohol containing any methanol. Either of these fuels may cause drivability problems and damage to the fuel system.

Discontinue using gasohol of any kind if drivability problems occur.

Vehicle damage or drivability problems may not be covered by the manufacturer's warranty if they result from the use of:

1. Gasohol containing more than 10% ethanol.
2. Gasoline or gasohol containing methanol.
3. Leaded fuel or leaded gasohol.

⚠ CAUTION

Never use gasohol which contains methanol. Discontinue use of any gasohol product which impairs drivability.

A020104AEN

Use of MTBE

HYUNDAI recommends avoiding fuels containing MTBE (Methyl Tertiary Butyl Ether) over 15.0% vol. (Oxygen Content 2.7% weight) in your vehicle.

Fuel containing MTBE over 15.0% vol. (Oxygen Content 2.7% weight) may reduce vehicle performance and produce vapor lock or hard starting.

⚠ CAUTION

Your New Vehicle Limited Warranty may not cover damage to the fuel system and any performance problems that are caused by the use of fuels containing methanol or fuels containing MTBE (Methyl Tertiary Butyl Ether) over 15.0% vol. (Oxygen Content 2.7% weight.)

A020105AUN

Do not use methanol

Fuels containing methanol (wood alcohol) should not be used in your vehicle. This type of fuel can reduce vehicle performance and damage components of the fuel system.

Fuel Additives

HYUNDAI recommends that you use good quality gasoline that meets Europe Fuel standards (EN228) or equivalents.
For customers who do not use good quality gasoline including fuel additives regularly, and have problems starting or the engine does not run smoothly, one bottle of additives added to the fuel tank at every 15,000km (for Europe)/5,000km (except Europe). Additives are available from your authorized HYUNDAI dealer along with information on how to use them.

A020107AUN

Operation in foreign countries

If you are going to drive your vehicle in another country, be sure to:

- Observe all regulations regarding registration and insurance.
- Determine that acceptable fuel is available.

Diesel engine

A020201DUN

Diesel fuel

Diesel engine must be operated only on commercially available diesel fuel that complies with EN 590 or comparable standard. (EN stands for "European Norm").
Do not use marine diesel fuel, heating oils, or non-approved fuel additives, as this will increase wear and cause damage to the engine and fuel system.
The use of non-approved fuels and/or fuel additives will result in a limitation of your warranty rights.
Diesel fuel of above cetane 51 is used in your vehicle. If two types of diesel fuel are available, use summer or winter fuel properly according to the following temperature conditions.

- Above -5°C (23°F) ... Summer type diesel fuel.
- Below -5°C (23°F) ... Winter type diesel fuel.

Watch the fuel level in the tank very carefully : If the engine stops through fuel failure, the circuits must be completely purged to permit restarting.

⚠ CAUTION

Do not let any gasoline or water enter the tank. This would make it necessary to drain it out and to bleed the lines to avoid jamming the injection pump and damaging the engine.

⚠ CAUTION - Diesel Fuel (if equipped with DPF)

It is recommended to use the regulated automotive diesel fuel for diesel vehicle equipped with the DPF system.

If you use diesel fuel including high sulfur (more than 50 ppm sulfur) and unspecified additives, it can cause the DPF system to be damaged and white smoke can be emitted.

A020202BUN

Biodiesel

Commercially supplied Diesel blends of no more than 7% biodiesel, commonly known as "B7 Diesel" may be used in your vehicle if Biodiesel meets EN 14214 or equivalent specifications. (EN stands for "European Norm"). The use of biofuels exceeding 7% made from rapeseed methyl ester (RME), fatty acid methyl ester (FAME), vegetable oil methyl ester (VME) etc. or mixing diesel exceeding 7% with biodiesel will cause increased wear or damage to the engine and fuel system. Repair or replacement of worn or damaged components due to the use of non approved fuels will not be covered by the manufactures warranty.

A020202AUN

Biodiesel (for New Zealand)

Commercially supplied Diesel blends of no more than 7% biodiesel, commonly known as "B7 Diesel" may be used in your vehicle if Biodiesel meets EN 14214 or equivalent specifications. (EN stands for "European Norm"). The use of biofuels exceeding 7%, made from rapeseed methyl ester (RME), vegetable oil methyl ester (VME) etc. or mixing diesel exceeding 7% with biodiesel will cause increased wear or damage to the engine and fuel system. Repair or replacement of worn or damaged components due to the use of non approved fuels will not be covered by the manufactures warranty.

⚠ CAUTION

- ***Never use any fuel, whether diesel, B7 biodiesel or otherwise, that fails to meet the latest petroleum industry specification.***
- ***Never use any fuel additives or treatments that are not recommended or approved by the vehicle manufacturer.***

VEHICLE HANDLING INSTRUCTIONS

A090000AEN

As with other vehicles of this type, failure to operate this vehicle correctly may result in loss of control, an accident or vehicle rollover.

Specific design characteristics (higher ground clearance, track, etc.) give this vehicle a higher center of gravity than other types of vehicles. In other words they are not designed for cornering at the same speeds as conventional 2-wheel drive vehicles. Avoid sharp turns or abrupt maneuvers. Again, failure to operate this vehicle correctly may result in loss of control, an accident or vehicle rollover. **Be sure to read the “Reducing the risk of a rollover” driving guidelines, in section 5 of this manual.**

VEHICLE BREAK-IN PROCESS

A030000AUN

No special break-in period is needed. By following a few simple precautions for the first 1,000 km (600 miles) you may add to the performance, economy and life of your vehicle.

- Do not race the engine.
- While driving, keep your engine speed (rpm, or revolutions per minute) between 2,000 rpm and 4,000 rpm.
- Do not maintain a single speed for long periods of time, either fast or slow. Varying engine speed is needed to properly break-in the engine.
- Avoid hard stops, except in emergencies, to allow the brakes to seat properly.
- Don't let the engine idle longer than 3 minutes at one time.
- Don't tow a trailer during the first 2,000 km (1,200 miles) of operation.

INDICATOR SYMBOLS ON THE INSTRUMENT CLUSTER

A050000ATQ

- Door ajar warning light
- Seat belt warning light (if equipped)
- High beam indicator
- Turn signal indicator
- ABS warning light (if equipped)
- Parking brake & Brake fluid warning light
- Engine oil pressure warning light
- Charging system warning light
- Malfunction indicator (if equipped)
- Air bag warning light (if equipped)
- Immobilizer indicator (if equipped)
- Tailgate open warning light
- Low fuel level warning light
- Glow indicator (Diesel only)
- Fuel filter warning light (Diesel only)
- Overspeed warning light (if equipped)
- O/D OFF indicator (if equipped)
- ESP indicator (if equipped)
- ESP OFF indicator (if equipped)

* For more detailed explanations, refer to “Instrument cluster” in section 4.

Your vehicle at a glance

2

Interior overview / 2-2
Instrument panel overview / 2-4
Engine compartment / 2-6

INTERIOR OVERVIEW

Left-Hand drive type

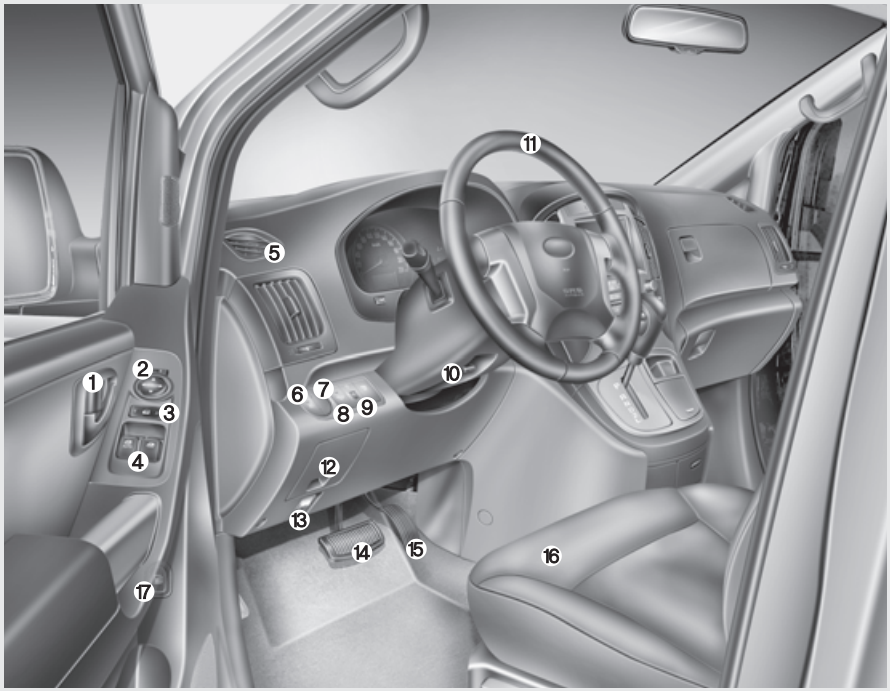

1. Door lock/unlock button* 4-10
2. Outside rearview mirror control switch*.....4-30
3. Central door lock switch* 4-11
4. Power window switches*.....4-16
5. Air vent.....4-60
6. Front fog light switch*.....4-51
7. Rear fog light switch* 4-51
8. Head lamp leveling device*.....4-52
9. Instrument panel illumination control knob*.....4-33
10. Steering wheel tilt control* 4-26
11. Steering wheel 4-26
12. Fuse box 7-51
13. Hood release lever.....4-21
14. Brake pedal.....5-18
15. Accelerator pedal 5-6
16. Seat.....3-2
17. Fuel filler lid release button.....4-23

* : if equipped

OTQ027001G

B010000ATQ

Right-Hand drive type

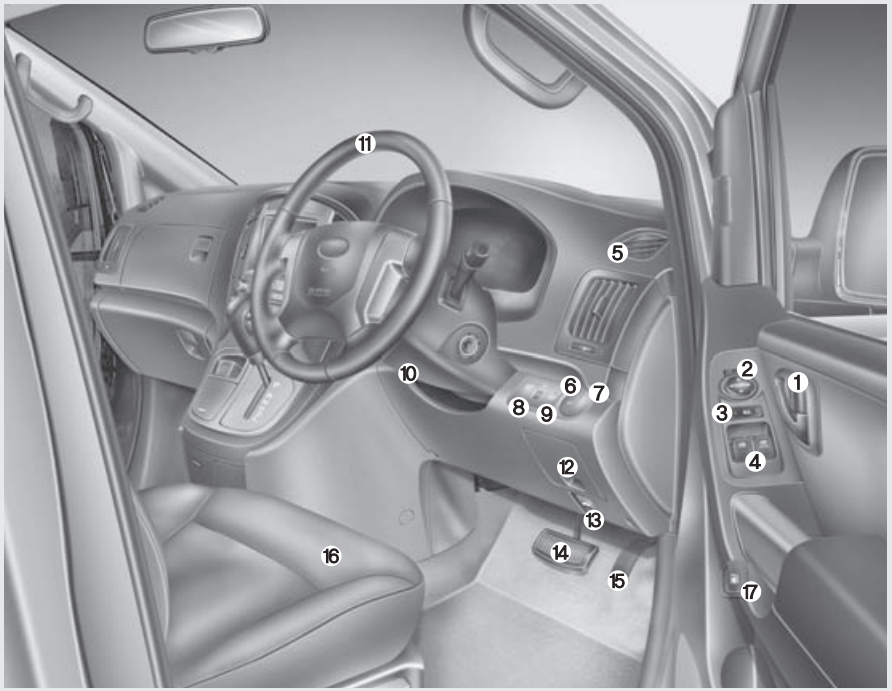

1. Door lock/unlock button* 4-10
2. Outside rearview mirror control switch*.....4-30
3. Central door lock switch* 4-11
4. Power window switches*.....4-16
5. Air vent.....4-60
6. Front fog light switch*.....4-51
7. Rear fog light switch* 4-51
8. Head lamp levelling device*.....4-52
9. Instrument panel illumination control knob*.....4-33
10. Steering wheel tilt control*.....4-26
11. Steering wheel.....4-26
12. Fuse box 7-51
13. Hood release lever.....4-21
14. Brake pedal.....5-18
15. Accelerator pedal.....5-6
16. Seat.....3-2
17. Fuel filler lid release button.....4-23

* : if equipped

OTQ027001R

B010000ATQ-EA

INSTRUMENT PANEL OVERVIEW

Left-Hand drive type

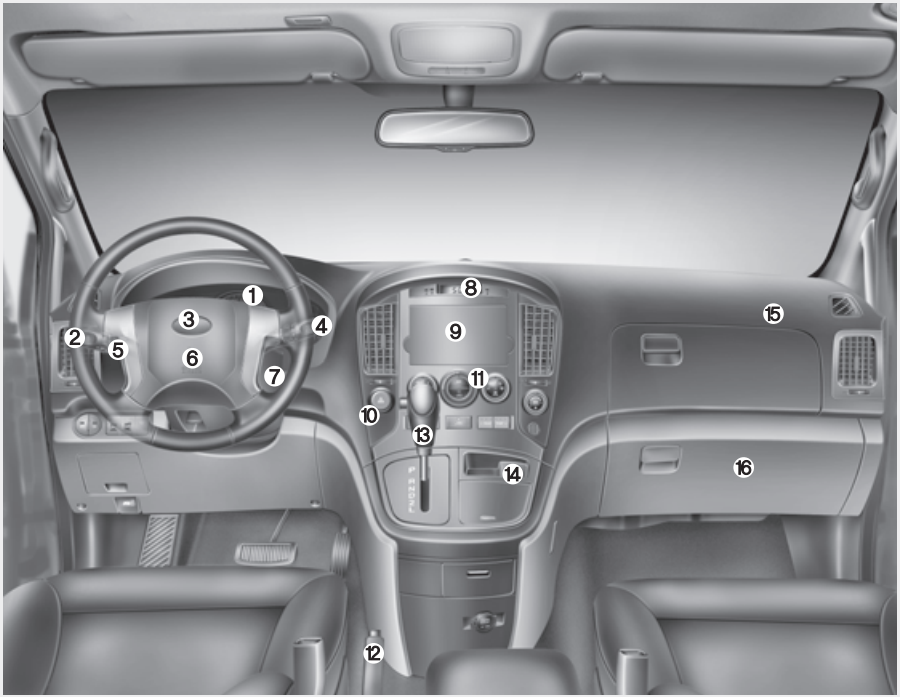

1. Instrument cluster.....4-32
2. Light control / Turn signals 4-48
3. Horn 4-27
4. Wiper/Washer.....4-53
5. Steering wheel audio controls* 4-80
6. Driver's front air bag* 3-36
7. Ignition switch.....5-4
8. Digital clock* 4-77
9. Audio*.....4-79
10. Hazard warning flasher switch 4-48, 6-2
11. Climate control system* 4-59
12. Parking brake 5-19
13. Shift lever 5-11, 5-8
14. AUX, USB and iPod port* 4-81
15. Passenger's front air bag*.....3-36
16. Glove box 4-72

* : if equipped

OTQ027002G

B020000BTQ

Right-Hand drive type

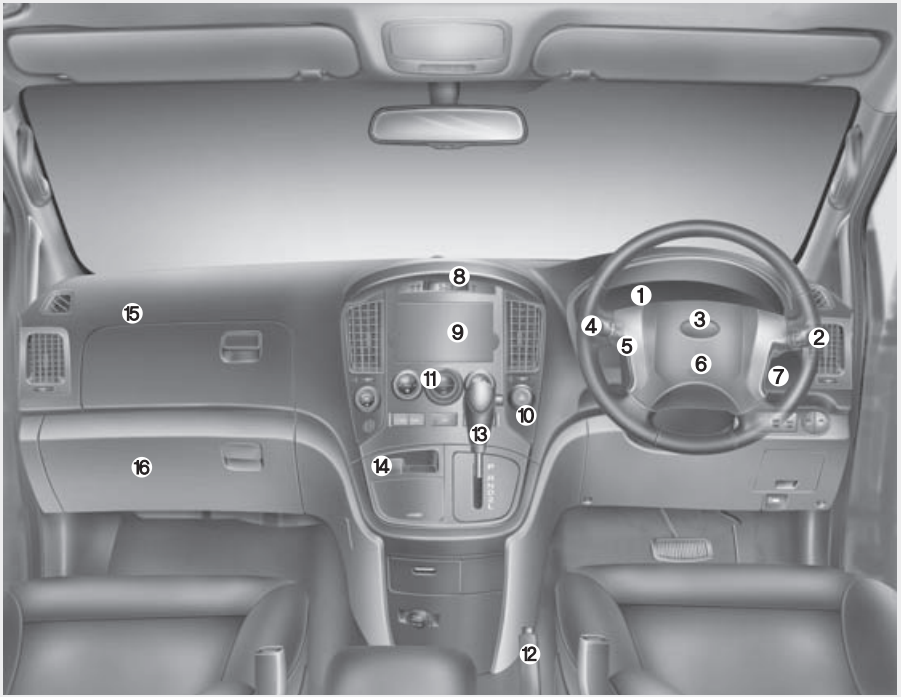

1. Instrument cluster.....4-32
2. Light control / Turn signals 4-48
3. Horn 4-27
4. Wiper/Washer.....4-53
5. Steering wheel audio controls* 4-80
6. Driver's front air bag* 3-36
7. Ignition switch.....5-4
8. Digital clock* 4-77
9. Audio*.....4-79
10. Hazard warning flasher switch 4-48, 6-2
11. Climate control system* 4-59
12. Parking brake 5-19
13. Shift lever 5-11, 5-8
14. AUX, USB and iPod port* 4-81
15. Passenger's front air bag*.....3-36
16. Glove box 4-72

* : if equipped

OTQ027002R

B020000BTQ

ENGINE COMPARTMENT

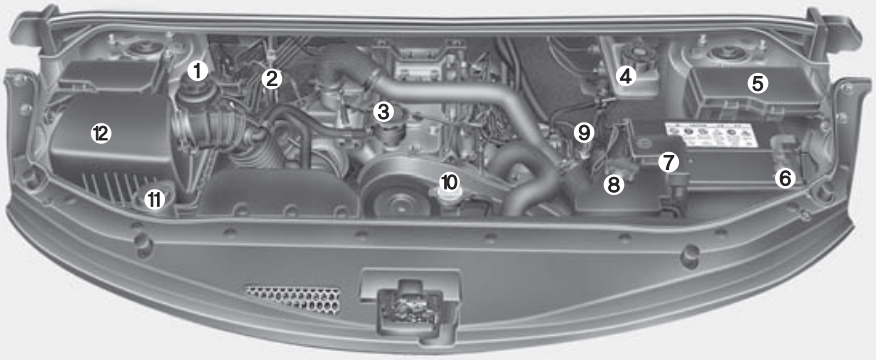

1. Power steering fluid reservoir 7-29
2. Automatic transmission fluid dipstick*.....7-30
3. Engine oil filler cap 7-25
4. Brake fluid reservoir.....7-28
5. Fuse box 7-51
6. Negative battery terminal.....7-39
7. Positive battery terminal 7-39
8. Engine coolant reservoir.....7-27
9. Engine oil dipstick.....7-25
10. Radiator cap 7-27
11. Windshield washer fluid reservoir...7-32
12. Air cleaner.....7-34

* : if equipped

* The actual engine room in the vehicle may differ from the illustration.

OTQ077001

B030000ATQ

Seats / 3-2
Seat belts / 3-14
Child restraint system / 3-25
Air bag - supplemental restraint system / 3-36

Safety features of your vehicle

3

SEATS

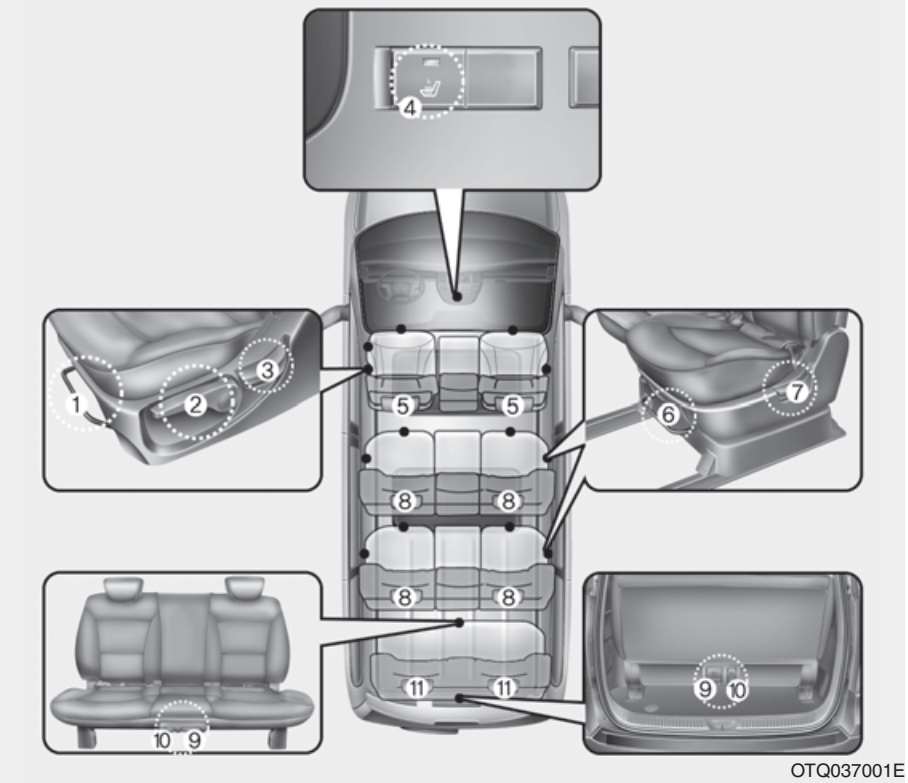

C010000BTQ

The actual seats in the vehicle may differ from the illustration.

Front seat

(1) Forward and backward
(2) Seatback angle
(3) Seat cushion height (Driver's seat)*
(4) Seat warmer (Driver's seat)*
(5) Headrest

2nd row seat* / 3rd row seat*

(6) Forward and backward/
Seat rotation (2nd row seat only)*
(7) Seatback angle
(8) Headrest

4th row seat*

(9) Forward and backward
(10) Seat cushion folding
(11) Headrest

*: if equipped

⚠ WARNING - Loose objects

Loose objects in the driver's foot area could interfere with the operation of the foot pedals, possibly causing an accident. Do not place anything under the front seats.

⚠ WARNING - Uprighting seat

When you return the seatback to its upright position, hold the seatback and return it slowly and be sure there are no other occupants around the seat. If the seatback is returned without being held and controlled, the back of the seat could spring forward resulting in accidental injury to a person struck by the seatback.

⚠ WARNING - Driver responsibility for passengers

Riding in a vehicle with the seatback reclined could lead to serious or fatal injury in an accident. If a seat is reclined during an accident, the occupant's hips may slide under the lap portion of the seat belt applying great force to the unprotected abdomen. Serious or fatal internal injuries could result. The driver must advise the front passenger to keep the seatback in an upright position whenever the vehicle is in motion.

⚠ WARNING

Do not use a sitting cushion that reduces friction between the seat and passenger. The passenger's hips may slide under the lap portion of the seat belt during an accident or a sudden stop. Serious or fatal internal injuries could result because the seat belt can't operate normally.

⚠ WARNING - Driver's seat

- **Never attempt to adjust the seat while the vehicle is moving. This could result in loss of control, and an accident causing death, serious injury, or property damage.**
- **Do not allow anything to interfere with the normal position of the seatback. Storing items against a seatback or in any other way interfering with proper locking of a seatback could result in serious or fatal injury in a sudden stop or collision.**
- **Always drive and ride with your seatback upright and the lap portion of the seat belt snug and low across the hips. This is the best position to protect you in case of an accident.**
- **In order to avoid unnecessary and perhaps severe air bag injuries, always sit as far back as possible from the steering wheel while maintaining comfortable control of the vehicle. We recommend that your chest be at least 250 mm (10 inches) away from the steering wheel.**

⚠ WARNING - Rear seatbacks

- **The rear seatback must be securely latched. If not, passengers and objects could be thrown forward resulting in serious injury or death in the event of a sudden stop or collision.**
- **Luggage and other cargo should be laid flat in the cargo area. If objects are large, heavy, or must be piled, they must be secured. Under no circumstances should cargo be piled higher than the seatbacks. Failure to follow these warnings could result in serious injury or death in the event of a sudden stop, collision or rollover.**
- **No passenger should ride in the cargo area or sit or lie on folded seatbacks while the vehicle is moving. All passengers must be properly seated in seats and restrained properly while riding.**
- **When resetting the seatback to the upright position, make sure it is securely latched by pushing it forward and backwards.**
- **To avoid the possibility of burns, do not remove the carpet in the cargo area. Emission control devices beneath this floor generate high temperatures.**

⚠ WARNING

After adjusting the seat, always check that it is securely locked into place by attempting to move the seat forward or backward without using the lock release lever. Sudden or unexpected movement of the driver's seat could cause you to lose control of the vehicle resulting in an accident.

⚠ WARNING

- **Do not adjust the seat while wearing seat belts. Moving the seat cushion forward may cause strong pressure on the abdomen.**
- **Use extreme caution so that hands or other objects are not caught in the seat mechanisms while the seat is moving.**
- **Do not put a cigarette lighter on the floor or seat. When you operate the seat, gas may gush out of the lighter and cause fire.**

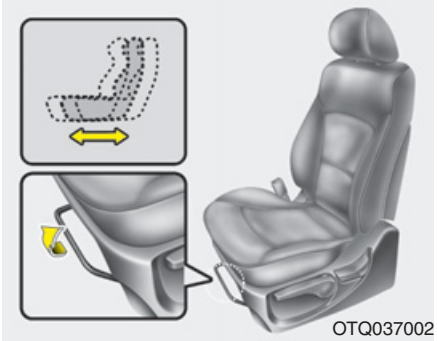

Front seat adjustment

C010101AUN

Forward and backward

To move the seat forward or backward:

1. Pull the seat slide adjustment lever under the front edge of the seat cushion up and hold it.
2. Slide the seat to the position you desire.
3. Release the lever and make sure the seat is locked in place.

Adjust the seat before driving, and make sure the seat is locked securely by trying to move forward and backward without using the lever. If the seat moves, it is not locked properly.

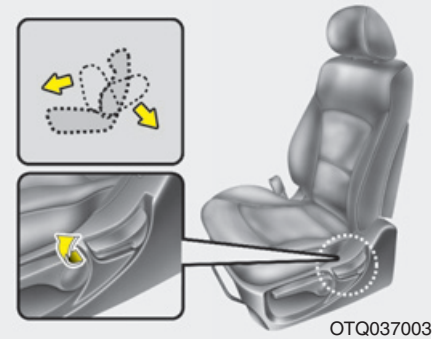

C010102AUN

Seatback angle

To recline the seatback:

1. Lean forward slightly and lift up on the seatback recline lever located on the outside of the seat at the rear.
2. Carefully lean back on the seat and adjust the seatback of the seat to the position you desire.
3. Release the lever and make sure the seatback is locked in place. (The lever MUST return to its original position for the seatback to lock.)

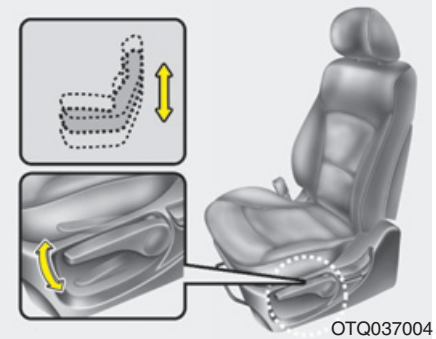

C010103AUN

Seat cushion height (for driver's seat)

To change the height of the seat cushion, push the lever that is located on the outside of the seat cushion upwards or downwards.

- To lower the seat cushion, push the lever down several times.
- To raise the seat cushion, pull the lever up several times.

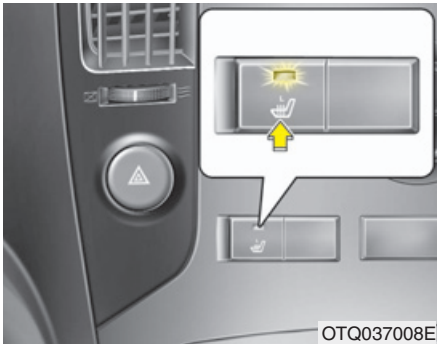

C010107BTQ

Seat warmer (Driver's seat, if equipped)

The seat warmer is provided to warm the driver's seat during cold weather. With the ignition switch in the ON position, push the switch to warm the driver's seat.

During mild weather or under conditions where the operation of the seat warmer is not needed, keep the switch in the "OFF" position.

- The seat warmer defaults to the OFF position whenever the ignition switch is turned on.

✻ NOTICE

With the seat warmer switch in ON position, the heating system in the seat turns off or on automatically depending on the seat temperature.

⚠ CAUTION

- ***When cleaning the seats, do not use an organic solvent such as thinner, benzene, alcohol and gasoline. Doing so may damage the surface of the heater or seats.***
- ***To prevent overheating the seat warmer, do not place anything on the seats that insulates against heat, such as blankets, cushions or seat covers while the seat warmer is in operation.***
- ***Do not place heavy or sharp objects on seats equipped with seat warmer. Damage to the seat warming components could occur.***

⚠ WARNING - Seat warmer burns

Passengers should use extreme caution when using seat warmers due to the possibility of excess heating or burns. The seat warmer may cause burns even at low temperatures, especially if used for long periods of time.

In particular, the driver must exercise extreme care for the following types of passengers:

1. **Infants, children, elderly or handicapped persons, or hospital outpatients**
2. **Persons with sensitive skin or those that burn easily**
3. **Fatigued individuals**
4. **Intoxicated individuals**
5. **Individuals taking medication that can cause drowsiness or sleepiness (sleeping pills, cold tablets, etc.)**

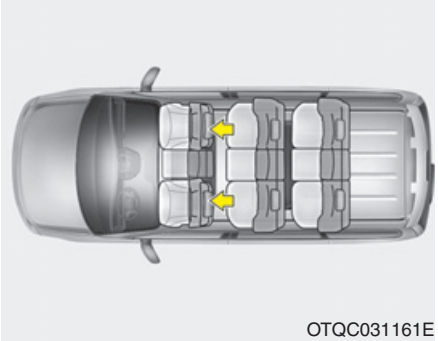

OTQC031161E

C010104BTQ

Headrest

The driver's and front passenger's seats are equipped with a headrest for the occupant's safety and comfort.

The headrest not only provides comfort for the driver and front passenger, but also helps to protect the head and neck in the event of a collision.

⚠ WARNING

- **For maximum effectiveness in case of an accident, the headrest should be adjusted so the middle of the headrest is at the same height of the center of gravity of an occupant's head. Generally, the center of gravity of most people's head is similar with the height of the top of their eyes. Also, adjust the headrest as close to your head as possible. For this reason, the use of a cushion that holds the body away from the seatback is not recommended.**
- **Do not operate the vehicle with the headrests removed as severe injury to the occupants may occur in the event of an accident. Headrests may provide protection against neck injuries when properly adjusted.**
- **Do not adjust the headrest position of the driver's seat while the vehicle is in motion.**

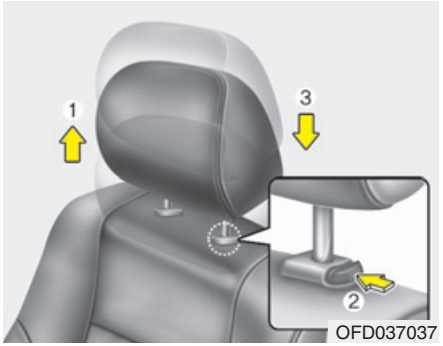

Adjusting the height up and down

To raise the headrest, pull it up to the desired position (1). To lower the headrest, push and hold the release button (2) on the headrest support and lower the headrest to the desired position (3).

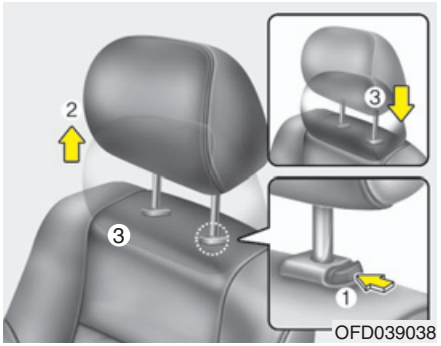

Removal

To remove the headrest, raise it as far as it can go then press the release button (1) while pulling upward (2).

To reinstall the headrest, put the headrest poles (3) into the holes while pressing the release button (1). Then adjust it to the appropriate height.

⚠ WARNING

Make sure the headrest locks in position after adjusting it to properly protects the occupants.

C010108AUN

Seatback pocket (if equipped)

The seatback pocket is provided on the back of the front passenger's and driver's seatbacks.

⚠ WARNING - Seatback pockets

Do not put heavy or sharp objects in the seatback pockets. In an accident they could come loose from the pocket and injure vehicle occupants.

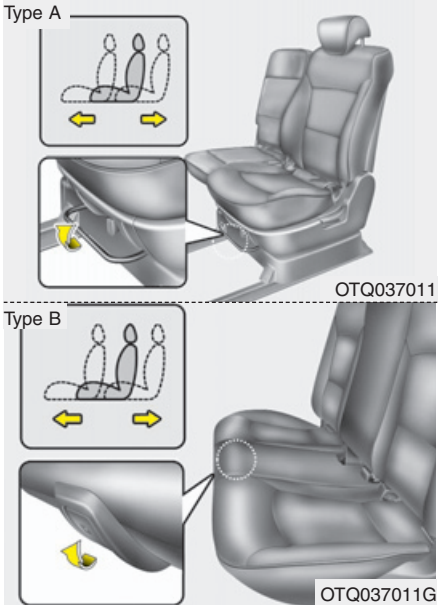

Rear seat adjustment

C010301ATQ

Forward and backward (2nd and 3rd row, if equipped)

To move the seat forward or backward:

1. Pull up the seat slide adjustment lever under the front edge of the seat cushion and hold it.
2. Slide the seat to the position you desire.
3. Release the lever and make sure the seat is locked in place.

Adjust the seat before driving, and make sure the seat is locked securely by trying to move forward and backward without using the lever. If the seat moves, it is not locked properly.

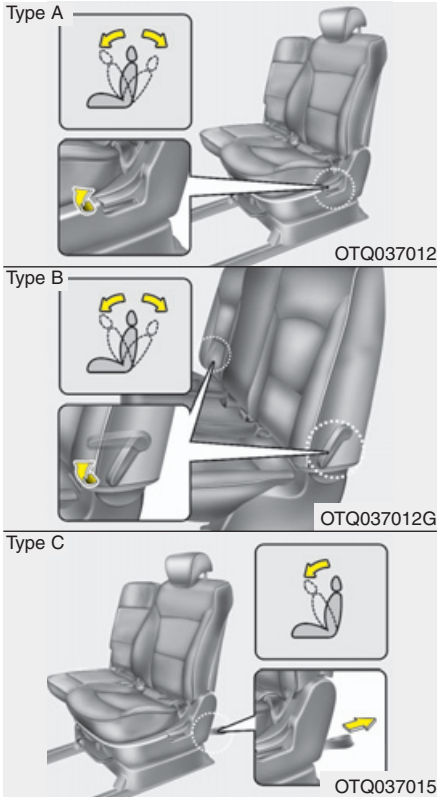

C010302ATQ

Seatback angle (if equipped)

To recline the seatback:

1. Pull or pull up the seatback recline lever.
2. Carefully lean back the seat and adjust the seatback to the position you desire.
3. Release the lever and make sure the seatback is locked in place. (The lever MUST return to its original position for the seatback to lock.)

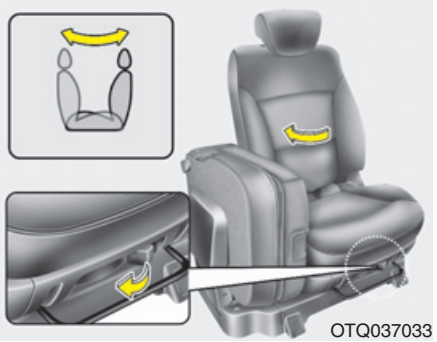

Seat rotation
(2nd row seat, if equipped)

Pull the lever and rotate the seat clockwise.

⚠ WARNING

- **Never rotate the seat while the vehicle is in motion.**
- **When the seat is rotated, be sure that the seat is securely locked in position. It not, it may result in serious injury in the event of a sudden stop.**

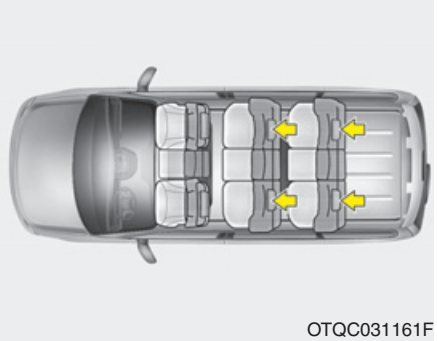

C010303BTQ

Headrest

The rear seats are equipped with headrests in the outboard seating positions (except center seating position) for the occupant's safety and comfort.

The headrest not only provides comfort for passengers, but also helps to protect the head and neck in the event of a collision.

⚠ WARNING

- **For maximum effectiveness in case of an accident, the headrest should be adjusted so the middle of the headrest is at the same height of the center of gravity of an occupant's head. Generally, the center of gravity of most people's head is similar with the height of the top of their eyes. Also, adjust the headrest as close to your head as possible. The use of a cushion that holds the body away from the seatback is not recommended.**
- **Do not operate the vehicle with the headrests removed as severe injury to an occupant may occur in the event of an accident. Headrests may provide protection against severe neck injuries when properly adjusted.**

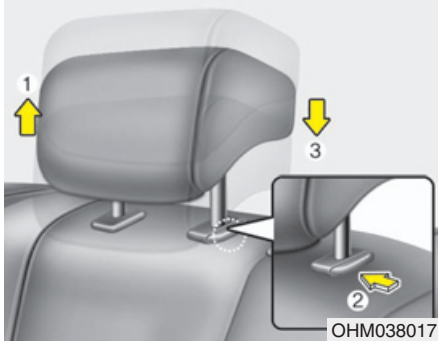

Adjusting the height up and down

To raise the headrest, pull it up to the desired position (1). To lower the headrest, push and hold the release button (2) on the headrest support and lower the headrest to the desired position (3).

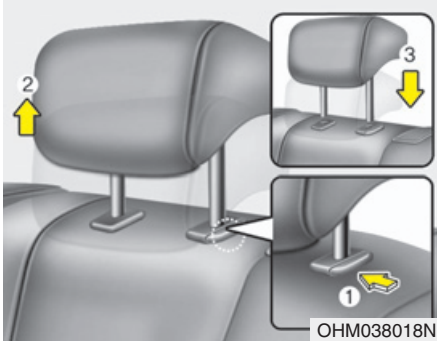

OHM038018N

Removal

To remove the headrest, raise it as far as it can go then press the release button (1) while pulling upward (2).

To reinstall the headrest, put the headrest poles (3) into the holes while pressing the release button (1). Then adjust it to the appropriate height.

⚠ WARNING

Make sure the headrest locks in position after adjusting it to properly protect the occupants.

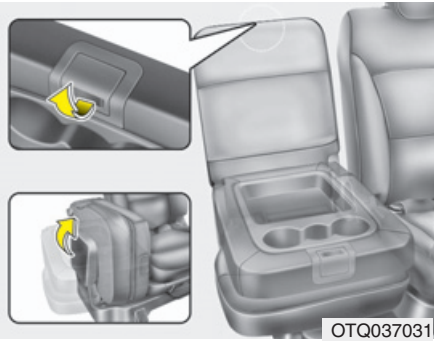
OTQ037031

C010304ATQ

Center seat folding (if equipped)

1. Stow the rear seat belt in the pocket to prevent the seat belt from being damaged.
2. Pull the release knob and fold the seatback forward.
3. Fold up the seat.

⚠ WARNING - Uprighting seat

When you return the seatback to its upright position, hold the seatback and return it slowly. If the seatback is returned without holding it, the back of the seat could spring forward resulting in injury caused by being struck by the seatback.

⚠ CAUTION - Damaging rear seat belt buckles

When you fold the rear (2nd and/or 3rd row) seatback, insert the buckle in the pocket between the rear seatback and cushion. Doing so can prevent the buckle from being damaged by the rear seatback.

⚠ CAUTION - Rear seat belts

When returning the rear (2nd and/or 3rd row) seatbacks to the upright position, remember to return the rear shoulder belts to their proper position. Routing the seat belt webbing through the rear seat belt guides will help keep the belts from being trapped behind or under the seats.

C010307ATQ

Folding the rear seat (4th row seat, if equipped)

The rear seat cushion may be folded to facilitate carrying long items or to increase the luggage capacity of the vehicle.

⚠ WARNING

The purpose of the fold rear seat is to allow you to carry longer objects that could not be accommodated in the cargo area.

Never allow passengers to sit on a improper position (ex : top of the folded seat, floor etc.) while the car is moving as this is not a proper seating position and no seat belts are available for use. This could result in serious injury or death in case of an accident or sudden stop. Objects carried on the cargo area should not extend higher than the top of the front seatbacks. Doing this could allow cargo to slide forward and cause injury or damage during sudden stops.

To fold the rear seat:

1. Stow the rear seat belt in the pocket to prevent the seat belt from being damaged.
2. Set the 3rd row seatback to the upright position and if necessary, slide the 3rd row seat forward.

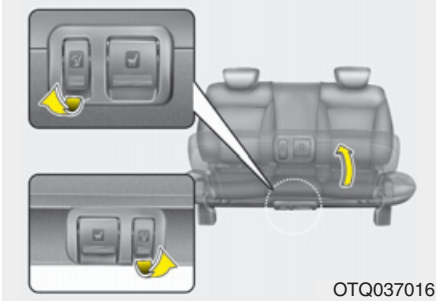
OTQ037016

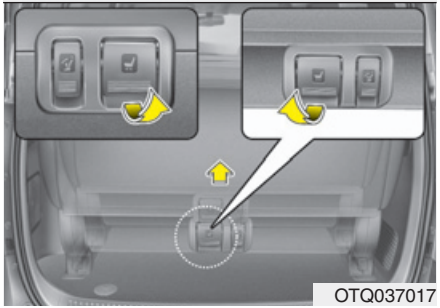
OTQ037017

3. Pull on the seatcushion folding lever, then fold the seat toward the rear of the vehicle.
4. Increase the luggauge compartment space by moving the rear seat using the sliding lever.

⚠ WARNING

When you return the rear seat cushion to its locking position after being folded:

Be careful not to damage the seat belt webbing or buckle. Do not allow the seat belt webbing or buckle to get caught or pinched in the rear seat. Ensure that the seat is completely locked into its proper position by pushing the seat cushion and seatback.

Otherwise, in an accident or sudden stop, the seat could fold, which could result in serious injury or death.

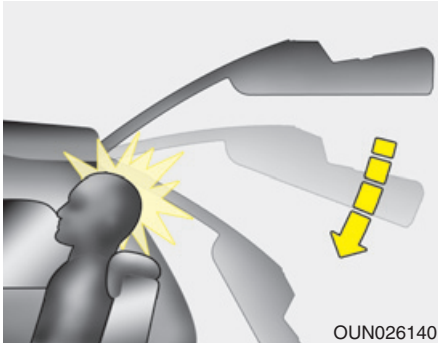

⚠ WARNING

The headrest on the seat (especially the last row seat) should be adjusted so the middle of the headrest is at the same height as the top of the occupant's eyes.

If the tailgate is pushed down to close when a passenger's head is not against a properly adjusted headrest or a tall person is seated, the tailgate may hit the occupant's head, which could cause injury.

⚠ WARNING - Cargo

Cargo should always be secured to prevent it from being thrown about the vehicle in a collision and causing injury to the vehicle occupants. Do not place objects in the rear seats, since they cannot be properly secured and may hit the front seat occupants in a collision.

⚠ WARNING - Cargo loading

Make sure the engine is off, the automatic transmission is in P (Park) or the manual transmission is in R (Reverse) or 1st, and the parking brake is securely applied whenever loading or unloading cargo. Failure to take these steps may allow the vehicle to move if the shift lever is inadvertently moved to another position.

SEAT BELTS

C020100BUN

Seat belt restraint system

⚠ WARNING

- **For maximum restraint system protection, the seat belts must always be used whenever the car is moving.**
- **Seat belts are most effective when seatbacks are in the upright position.**
- **Children age 12 and under must always be properly restrained in the rear seat. Never allow children to ride in the front passenger seat. If a child over 12 must be seated in the front seat, he/she must be properly belted and the seat should be moved as far back as possible.**
- **Never wear the shoulder belt under your arm or behind your back. An improperly positioned shoulder belt can cause serious injuries in a crash. The shoulder belt should be positioned midway over your shoulder across your collarbone.**

(Continued)

(Continued)

- **Avoid wearing twisted seat belts. A twisted belt can't do its job as well. In a collision, it could even cut into you. Be sure the belt webbing is straight and not twisted.**
- **Be careful not to damage the belt webbing or hardware. If the belt webbing or hardware is damaged, replace it.**

⚠ WARNING

Seat belts are designed to bear upon the bony structure of the body, and should be worn low across the front of the pelvis, or the pelvis, chest and shoulders, as applicable; wearing the lap section of the belt across the abdominal area must be avoided.

Seat belts should be adjusted as firmly as possible, consistent with comfort, to provide the protection for which they have been designed.

A slack belt will greatly reduce the protection afforded to the occupant.

Care should be taken to avoid contamination of the webbing with polishes, oils and chemicals and particularly battery acid. Cleaning may safely be carried out using mild soap and water. The belt should be replaced if webbing becomes frayed, contaminated or damaged.

(Continued)

(Continued)
It is essential to replace the entire assembly after it has been worn in a severe impact even if damage to the assembly is not obvious. Belts should not be worn with straps twisted. Each seat belt assembly must only be used by one occupant; it is dangerous to put a belt around a child being carried on the occupant's lap.

⚠ WARNING

- **No modifications or additions should be made by the user which will either prevent the seat belt adjusting devices from operating to remove slack, or prevent the seat belt assembly from being adjusted to remove slack.**
- **When you fasten the seat belt, be careful not to latch the seat belt in buckles of other seat. It's very dangerous and you may not be protected by the seat belt properly.**
- **Do not unfasten the seat belt and do not fasten and unfasten the seat belt repeatedly while driving. This could result in loss of control, and an accident causing death, serious injury, or property damage.**
- **When fastening the seat belt, make sure that the seat belt does not pass over objects that are hard or can break easily.**
- **Make sure there is nothing in the buckle. The seat belt may not be fastened securely.**

D150302AEN-EE

Seat belt warning (if equipped)

As a reminder to the driver, the seat belt warning light will blink for approximately 6 seconds each time you turn the ignition switch ON regardless of belt fastening.
If the driver’s seat belt is unfastened after the ignition switch is ON, the seat belt warning light blinks again for approximately 6 seconds.

Seat belt warning chime (if equipped)

If the driver's seat belt is not fastened when the ignition switch is turned ON or if it is unfastened after the ignition switch is ON, the seat belt warning chime will sound for approximately 6 seconds. At this time, if the seat belt is fastened, the chime will stop at once.

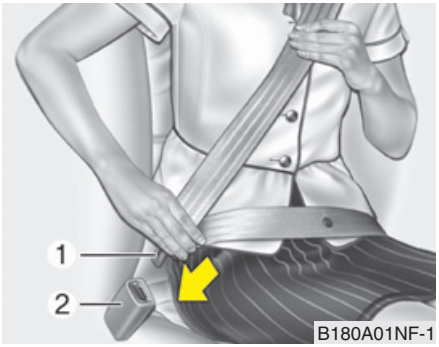

C020102AEN

Lap/shoulder belt

To fasten your seat belt:

To fasten your seat belt, pull it out of the retractor and insert the metal tab (1) into the buckle (2). There will be an audible "click" when the tab locks into the buckle.

The seat belt automatically adjusts to the proper length only after the lap belt portion is adjusted manually so that it fits snugly around your hips. If you lean forward in a slow, easy motion, the belt will extend and let you move around. If there is a sudden stop or impact, however, the belt will lock into position. It will also lock if you try to lean forward too quickly.

✻ NOTICE

If you are not able to pull out the seat belt from the retractor, firmly pull the belt out and release it. Then you will be able to pull the belt out smoothly.

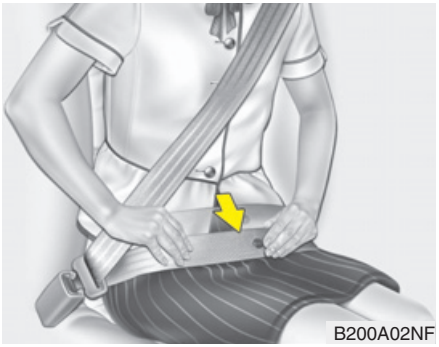

⚠ WARNING

You should place the lap belt portion as low as possible and snugly across your hips, not on your waist. If the lap belt is located too high on your waist, it may increase the chance of injury in the event of a collision. Both arms should not be under or over the belt. Rather, one should be over and the other under, as shown in the illustration.

Never wear the seat belt under the arm nearest the door.

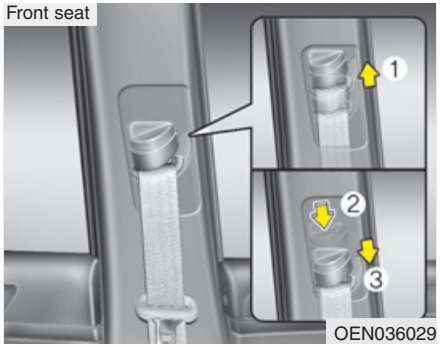

Height adjustment (if equipped)

You can adjust the height of the shoulder belt anchor to one of 5 positions for maximum comfort and safety.

The height of the adjusting seat belt should not be too near your neck. The shoulder portion should be adjusted so that it lies across your chest and midway over your shoulder nearest the door and not your neck.

To adjust the height of the seat belt anchor, lower or raise the height adjuster into an appropriate position.

To raise the height adjuster, pull it up (1). To lower it, push it down (3) while pressing the height adjuster button (2).

Release the button to lock the anchor into position. Try sliding the height adjuster to make sure that it has locked into position.

⚠ WARNING

- **Verify the shoulder belt anchor is locked into position at the appropriate height. Never position the shoulder belt across your neck or face. Improperly positioned seat belts can cause serious injuries in an accident.**
- **Failure to replace seat belts after an accident could leave you with damaged seat belts that will not provide protection in the event of another collision leading to personal injury or death. Replace your seat belts after being in an accident as soon as possible.**

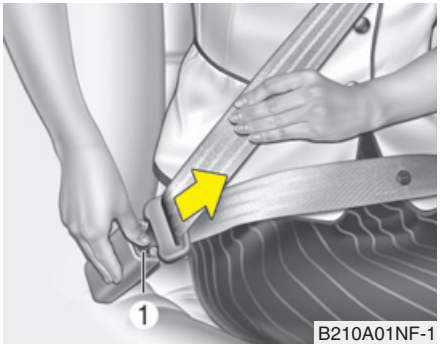

To release the seat belt:

The seat belt is released by pressing the release button (1) in the locking buckle. When it is released, the belt should automatically draw back into the retractor.

If this does not happen, check the belt to be sure it is not twisted, then try again.

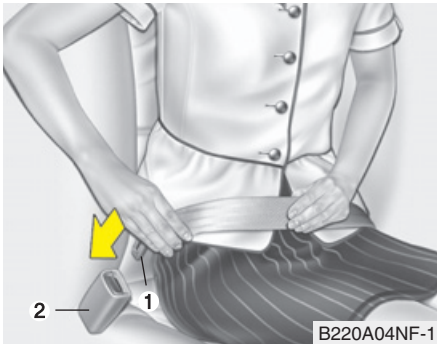

C020103AUN

Lap belt (if equipped)

To fasten your seat belt:

To fasten a 2-point static type belt, insert the metal tab (1) into the locking buckle (2). There will be an audible "click" when the tab locks into the buckle. Check to make sure the belt is properly locked and that the belt is not twisted.

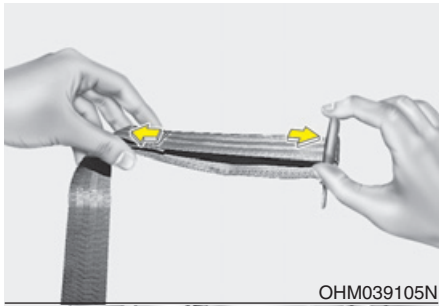

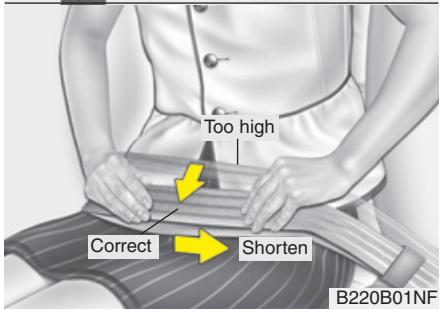

With a 2-point static type seat belt, the length must be adjusted manually so it fits snugly around your body. Fasten the belt and pull on the loose end to tighten. The belt should be placed as low as possible on your hips, not on your waist. If the belt is too high, it could increase the possibility of your being injured in an accident.

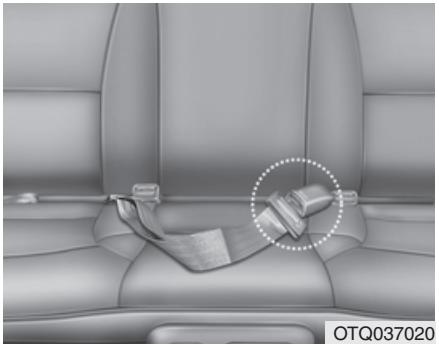

When using the rear center seat belt, the buckle with the “CENTER” mark must be used.

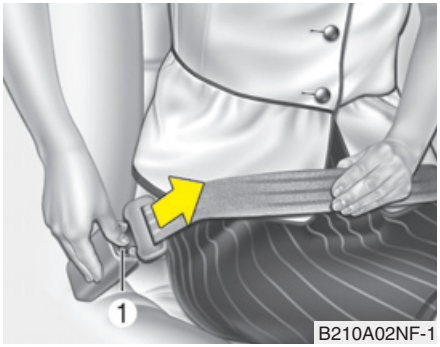

B210A02NF-1

To release the seat belt:

When you want to release the seat belt, press the button (1) in the locking buckle.

⚠ WARNING

The center lap belt latching mechanism is different from those for the rear seat shoulder belts. When fastening the rear seat shoulder belts or the center lap belt, make sure they are inserted into the correct buckles to obtain maximum protection from the seat belt system and assure proper operation.

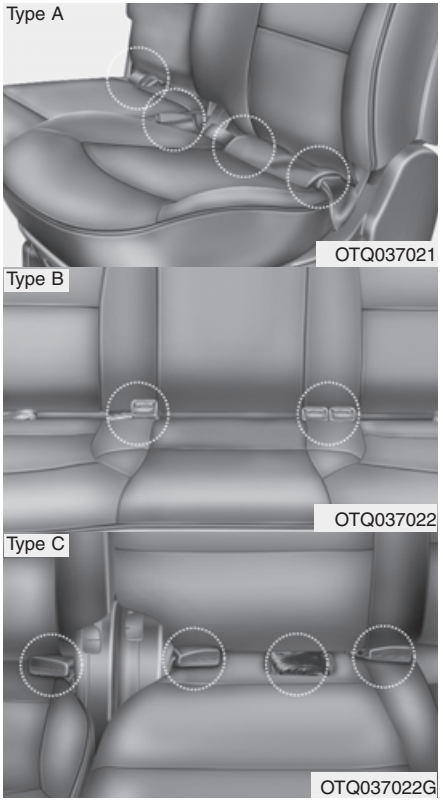

C020105AUN

Stowing the rear seat belt

- The rear seat belt buckles can be stowed in the pocket between the rear seatback and cushion when not in use.
- The center seat belt can be stowed with the plate and webbing rolled in the pocket between the rear seatback and cushion.

C020200CEN

Pre-tensioner seat belt (if equipped)

Your vehicle is equipped with driver's and front passenger's pre-tensioner seat belts. The purpose of the pre-tensioner is to make sure that the seat belts fit tightly against the occupant's body in certain frontal collisions. The pre-tensioner seat belts may be activated in crashes where the frontal collision is severe enough.

When the vehicle stops suddenly, or if the occupant tries to lean forward too quickly, the seat belt retractor will lock into position. In certain frontal collisions, the pre-tensioner will activate and pull the seat belt into tighter contact against the occupant's body.

⚠ WARNING

For your safety, be sure that the belt webbing is not loose or twisted and always sit properly on your seat.

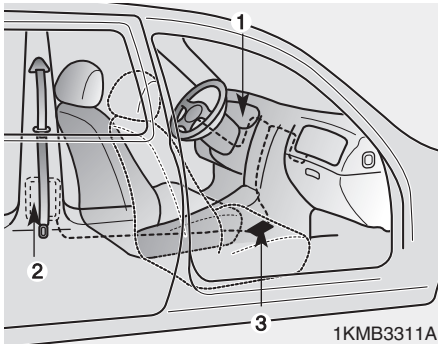

The seat belt pre-tensioner system consists mainly of the following components. Their locations are shown in the illustration:

1. SRS air bag warning light
2. Retractor pre-tensioner assembly
3. SRS control module

⚠ WARNING

To obtain maximum benefit from a pre-tensioner seat belt:

1. **The seat belt must be worn correctly and adjusted to the proper position. Please read and follow all of the important information and precautions about your vehicle's occupant safety features – including seat belts and air bags – that are provided in this manual.**
2. **Be sure you and your passengers always wear seat belts properly.**

✻ NOTICE

- Both the driver's and front passenger's pre-tensioner seat belts may be activated in certain frontal collisions.
- When the pre-tensioner seat belts are activated, a loud noise may be heard and fine dust, which may appear to be smoke, may be visible in the passenger compartment. These are normal operating conditions and are not hazardous.
- Although it is harmless, the fine dust may cause skin irritation and should not be breathed for prolonged periods. Wash all exposed skin areas thoroughly after an accident in which the pre-tensioner seat belts were activated.

✻ NOTICE

Because the sensor that activates the SRS air bag is connected with the pre-tensioner seat belt, the SRS air bag warning light on the instrument panel will illuminate for approximately 6 seconds after the ignition switch has been turned to the ON position, and then it should turn off.

⚠ CAUTION

If the pre-tensioner seat belt is not working properly, this warning light will illuminate even if there is no malfunction of the SRS air bag. If the SRS air bag warning light does not illuminate when the ignition switch is turned to ON, or if it remains illuminated after illuminating for approximately 6 seconds, or if it illuminates while the vehicle is being driven, please have an authorized HYUNDAI dealer inspect the pre-tensioner seat belt and SRS air bag system as soon as possible.

⚠ WARNING

- **Pre-tensioners are designed to operate only one time. After activation, pre-tensioner seat belts must be replaced. All seat belts, of any type, should always be replaced after they have been worn during a collision.**
- **The pre-tensioner seat belt assembly mechanisms become hot during activation. Do not touch the pre-tensioner seat belt assemblies for several minutes after they have been activated.**
- **Do not attempt to inspect or replace the pre-tensioner seat belts yourself. This must be done by an authorized HYUNDAI dealer.**
- **Do not strike the pre-tensioner seat belt assemblies.**
- **Do not attempt to service or repair the pre-tensioner seat belt system in any manner.**

(Continued)

(Continued)

- **Improper handling of the pre-tensioner seat belt assemblies, and failure to heed the warnings not to strike, modify, inspect, replace, service or repair the pre-tensioner seat belt assemblies may lead to improper operation or inadvertent activation and serious injury.**
- **Always wear the seat belts when driving or riding in a motor vehicle.**
- **If the vehicle or pre-tensioner seat belt must be discarded, contact an authorized HYUNDAI dealer.**

C020300AUN

Seat belt precautions

⚠ WARNING

All occupants of the vehicle must wear their seat belts at all times. Seat belts and child restraints reduce the risk of serious or fatal injuries for all occupants in the event of a collision or sudden stop. Without a seat belt, occupants could be shifted too close to a deploying air bag, strike the interior structure or be thrown from the vehicle. Properly worn seat belts greatly reduce these hazards.

Always follow the precautions about seat belts, air bags and occupant seating contained in this manual.

C020306AUN

Infant or small child

You should be aware of the specific requirements in your country. Child and/or infant seats must be properly placed and installed in the rear seat. For more information about the use of these restraints, refer to “Child restraint system” in this section.

⚠ WARNING

Every person in your vehicle needs to be properly restrained at all times, including infants and children. Never hold a child in your arms or lap when riding in a vehicle. The violent forces created during a crash will tear the child from your arms and throw the child against the interior. Always use a child restraint appropriate for your child's height and weight.

✻ NOTICE

Small children are best protected from injury in an accident when properly restrained in the rear seat by a child restraint system that meets the requirements of the Safety Standards of your country. Before buying any child restraint system, make sure that it has a label certifying that it meets Safety Standards of your country. The restraint must be appropriate for your child's height and weight. Check the label on the child restraint for this information. Refer to "Child restraint system" in this section.

C020301AUN

Larger children

Children who are too large for child restraint systems should always occupy the rear seat and use the available lap/shoulder belts. The lap portion should be fastened snug on the hips and as low as possible. Check belt fit periodically. A child's squirming could put the belt out of position. Children are afforded the most safety in the event of an accident when they are restrained by a proper restraint system in the rear seat.

If a larger child (over age 12) must be seated in the front seat, the child should be securely restrained by the available lap/shoulder belt and the seat should be placed in the rearmost position.

Children age 12 and under should be restrained securely in the rear seat. NEVER place a child age 12 and under in the front seat. NEVER place a rear facing child seat in the front seat of a vehicle.

If the shoulder belt portion slightly touches the child's neck or face, try placing the child closer to the center of the vehicle. If the shoulder belt still touches their face or neck they need to be returned to a child restraint system.

⚠ WARNING - Shoulder belts on small children

- **Never allow a shoulder belt to be in contact with a child's neck or face while the vehicle is in motion.**
- **If seat belts are not properly worn and adjusted on children, there is a risk of death or serious injury.**

C020302AUN

Pregnant women

The use of a seat belt is recommended for pregnant women to lessen the chance of injury in an accident. When a seat belt is used, the lap belt portion should be placed as low and snugly as possible on the hips, not across the abdomen. For specific recommendations, consult a physician.

C020303AUN

Injured person

A seat belt should be used when an injured person is being transported. When this is necessary, you should consult a physician for recommendations.

C020304AUN

One person per belt

Two people (including children) should never attempt to use a single seat belt. This could increase the severity of injuries in case of an accident.

C020305AUN

Do not lie down

To reduce the chance of injuries in the event of an accident and to achieve maximum effectiveness of the restraint system, all passengers should be sitting up and the front and rear seats should be in an upright position when the car is moving. A seat belt cannot provide proper protection if the person is lying down in the rear seat or if the front and rear seats are in a reclined position.

⚠ WARNING

Riding with a reclined seatback increases your chance of serious or fatal injuries in the event of a collision or sudden stop. The protection of your restraint system (seat belts and air bags) is greatly reduced by reclining your seat. Seat belts must be snug against your hips and chest to work properly. The more the seatback is reclined, the greater the chance that an occupant's hips will slide under the lap belt causing serious internal injuries or the occupant's neck could strike the shoulder belt. Drivers and passengers should always sit well back in their seats, properly belted, and with the seatbacks upright.

C020400AEN

Care of seat belts

Seat belt systems should never be disassembled or modified. In addition, care should be taken to assure that seat belts and belt hardware are not damaged by seat hinges, doors or other abuse.

⚠ WARNING

When you return the rear seat to its seating position after the rear seat has been folded, be careful not to damage the seat belt webbing or buckle. Be sure that the webbing or buckle does not get caught or pinched in the rear seat. A seat belt with damaged webbing or buckle could possibly fail during a collision or sudden stop, resulting in serious injury. If the webbing or buckles are damaged, get them replaced immediately.

C020401AEN

Periodic inspection

All seat belts should be inspected periodically for wear or damage of any kind. Any damaged parts should be replaced as soon as possible.

C020402AUN

Keep belts clean and dry

Seat belts should be kept clean and dry. If belts become dirty, they can be cleaned by using a mild soap solution and warm water. Bleach, dye, strong detergents or abrasives should not be used because they may damage and weaken the fabric.

C020403AEN

When to replace seat belts

Entire in-use seat belt assembly or assemblies should be replaced if the vehicle has been involved in an accident. This should be done even if no damage is visible. Additional questions concerning seat belt operation should be directed to an authorized HYUNDAI dealer.

CHILD RESTRAINT SYSTEM

C030000AEN

Children riding in the car should sit in the rear seat and must always be properly restrained to minimize the risk of injury in an accident, sudden stop or sudden maneuver. According to accident statistics, children are safer when properly restrained in the rear seats than in the front seat. Larger children not in a child restraint should use one of the seat belts provided.

You should be aware of the specific requirements in your country. Child and/or infant safety seats must be properly placed and installed in the rear seat. You must use a commercially available child restraint system that meets the requirements of the Safety Standards of your country. Child restraint systems are designed to be secured in vehicle seats by lap belts or the lap belt portion of a lap/shoulder belt, or by a tether anchor and/or ISOFIX anchors (if equipped).

Children could be injured or killed in a crash if their restraints are not properly secured. For small children and babies, a child seat or infant seat must be used. Before buying a particular child restraint system, make sure it fits your car seat and seat belts, and fits your child. Follow all the instructions provided by the manufacturer when installing the child restraint system.

⚠ WARNING

- **A child restraint system must be placed in the rear seat. Never install a child or infant seat on the front passenger's seat. Should an accident occur and cause the passenger-side air bag to deploy, it could severely injure or kill an infant or child seated in an infant or child seat. Thus only use a child restraint in the rear seat of your vehicle.**
- **A seat belt or child restraint system can become very hot if it is left in a closed vehicle on a sunny day, even if the outside temperature does not feel hot. Be sure to check the seat cover and buckles before placing a child there.**

(Continued)

(Continued)

- **When the child restraint system is not in use, store it in the luggage area or fasten it with a seat belt so that it will not be thrown forward in the case of a sudden stop or an accident.**
- **Children may be seriously injured or killed by an inflating air bag. All children, even those too large for child restraints, must ride in the rear seat.**

⚠ WARNING

To reduce the chance of serious or fatal injuries:

- **Children of all ages are safer when restrained in the rear seat. A child riding in the front passenger seat can be forcefully struck by an inflating air bag resulting in serious or fatal injuries.**
- **Always follow the child restraint system manufacturer's instructions for installation and use of the child restraint.**
- **Always make sure the child seat is secured properly in the car and your child is securely restrained in the child seat.**
- **Never hold a child in your arms or lap when riding in a vehicle. The violent forces created during a crash will tear the child from your arms and throw the child against the car's interior.**
- **Never put a seat belt over yourself and a child. During a crash, the belt could press deep into the child causing serious internal injuries.**

(Continued)

(Continued)

- **Never leave children unattended in a vehicle – not even for a short time. The car can heat up very quickly, resulting in serious injuries to children inside. Even very young children may inadvertently cause the vehicle to move, entangle themselves in the windows, or lock themselves or others inside the vehicle.**
- **Never allow two children, or any two persons, to use the same seat belt.**
- **Children often squirm and reposition themselves improperly. Never let a child ride with the shoulder belt under their arm or behind their back. Always properly position and secure children in the rear seat.**
- **Never allow a child to stand-up or kneel on the seat or floor of a moving vehicle. During a collision or sudden stop, the child can be violently thrown against the vehicle's interior, resulting in serious injury.**

(Continued)

(Continued)

- **Never use an infant carrier or a child safety seat that "hooks" over a seatback, it may not provide adequate security in an accident.**
- **Seat belts can become very hot, especially when the car is parked in direct sunlight. Always check seat belt buckles before fastening them over a child.**
- **After an accident, have an authorized HYUNDAI dealer check the child restraint system, seat belt, tether anchor and lower anchor.**

Rearward-facing child restraint system

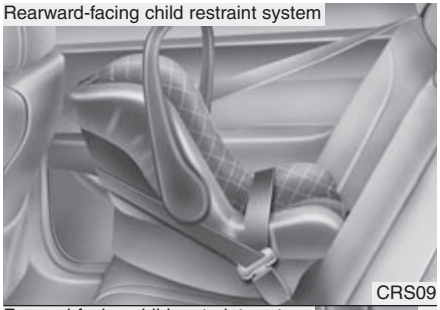

Forward-facing child restraint system

C030100AEN

Using a child restraint system

For small children and babies, the use of a child seat or infant seat is required. This child seat or infant seat should be of appropriate size for the child and should be installed in accordance with the manufacturer's instructions.

For safety reasons, we recommend that the child restraint system be used in the rear seats.

⚠ WARNING

Never place a rear-facing child restraint in the front passenger seat, because of the danger that an inflating passenger-side air bag could impact the rear-facing child restraint and kill the child.

⚠ WARNING - Child seat installation

- **A child can be seriously injured or killed in a collision if the child restraint is not properly anchored to the car and the child is not properly restrained in the child restraint. Before installing the child restraint system, read the instructions supplied by the child restraint system manufacturer.**
- **If the seat belt does not operate as described in this section, have the system checked immediately by your authorized HYUNDAI dealer.**
- **Failure to observe this manual's instructions regarding child restraint systems and the instructions provided with the child restraint system could increase the chance and/or severity of injury in an accident.**

1GHA2260

OTQ007002

C030101ATQ

Installing a child restraint system by lap belt

To install a child restraint system on the outboard or center rear seats, do the following:

1. Place the child restraint system on the rear seat.
2. Extend the latch plate tongue of the lap belt.
3. Route the lap belt through the restraint according to the seat manufacturer's instructions.
4. Buckle the seat belt and adjust the lap belt for a snug hold on the child restraint by pulling on the loose end of the belt. After installation of the child restraint system, try to move it in all directions to be sure the child restraint system is securely installed.

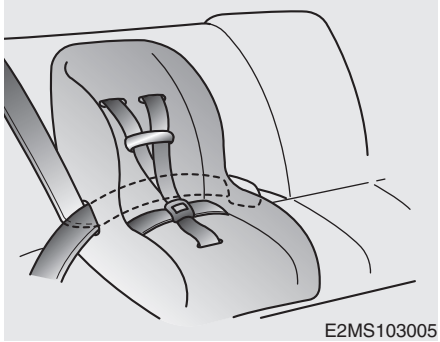
E2MS103005

C030102AUN

Installing a child restraint system by lap/shoulder belt (if equipped)

To install a child restraint system on the outboard or center rear seats, do the following:

1. Place the child restraint system in the seat and route the lap/shoulder belt around or through the restraint, following the restraint manufacturer's instructions. Be sure the seat belt webbing is not twisted.

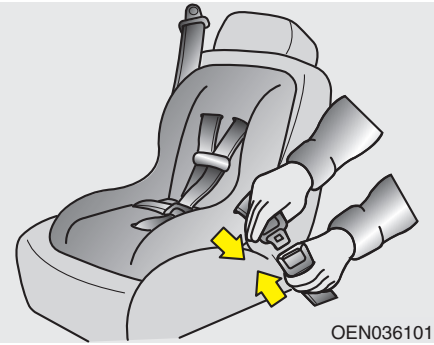

2. Fasten the lap/shoulder belt latch into the buckle. Listen for the distinct “click” sound.

Position the release button so that it is easy to access in case of an emergency.

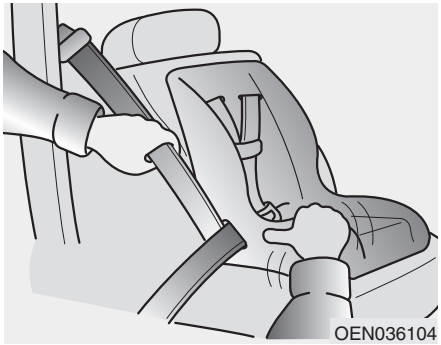

3. Buckle the seat belt and allow the seat belt to take up any slack. After installation of the child restraint system, try to move it in all directions to be sure the child restraint system is securely installed.

If you need to tighten the belt, pull more webbing toward the retractor. When you unbuckle the seat belt and allow it to retract, the retractor will automatically revert back to its normal seated passenger emergency locking usage condition.

C030101AUN

Installing a child restraint system by lap belt (on the center rear seat) (if equipped) - Except Europe

To install a child restraint system on the center rear seats, do the following:

1. Place the child restraint system on the center rear seat.
2. Extend the latch plate tongue of the lap belt.
3. Route the lap belt through the restraint according to the seat manufacturer’s instructions.
4. Buckle the seat belt and adjust the lap belt for a snug hold on the child restraint by pulling on the loose end of the belt. After installation of the child restraint system, try to move it in all directions to be sure the child restraint system is securely installed.

C030105ATQ

Child seat restraint suitability for seat position using the seat belt - For Europe

Use child safety seats that have been officially approved and are appropriate for your children. When using the child safety seats, refer to the following table.

8-seater Wagon

Age group	Seating position				
	Front passenger	2nd outboard	2nd center	3rd outboard	3rd center
0 : Up to 10 kg (0 - 9 months)	X	X	X	U	U
0+ : Up to 13 kg (0 - 2 years)	L4	L4	L4	U	U
I : 9 kg to 18 kg (9 months - 4 years)	L1, L2, L3	L1, L2, L3	L1, L2, L3	U	U
II & III : 15 kg to 36 kg (4 - 12 years)	X	X	X	U	U

5/6-seater Van

Age group	Seating position			
	Front passenger	Front center	2nd outboard	2nd center
0 : Up to 10 kg (0 - 9 months)	X	X	X	X
0+ : Up to 13 kg (0 - 2 years)	L4	X	L4	X
I : 9 kg to 18 kg (9 months - 4 years)	L1, L2, L3	X	L1, L2, L3	X
II & III : 15 kg to 36 kg (4 - 12 years)	X	X	X	X

L1 : Suitable for Romer Lord Plus (E1 03301136) approved for the use in this mass group

L2 : Suitable for Romer DUO (E1 3301133) approved for the use in this mass group

L3 : Suitable for BeSafe iZi COMFORT (E4 03443206) approved for the use in this mass group

L4 : Suitable for Bebe comfort ELIOS (E2 037014) approved for the use in this mass group

U : Suitable for "universal" category restraints approved for use in this mass group

UF : Suitable for forward-facing "universal" category restraints approved for the use in this mass group

X : Seat position not suitable for children in this mass group

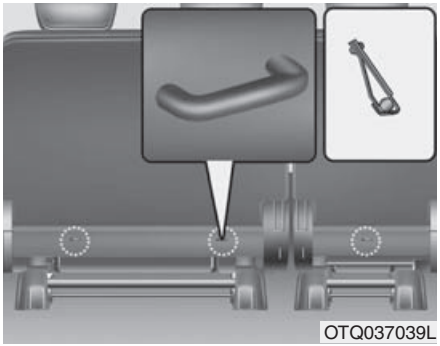

C030103ATQ

Securing a child restraint seat with "Tether Anchor" system (if equipped)

Child restraint hook holders are located behind the rear seats.

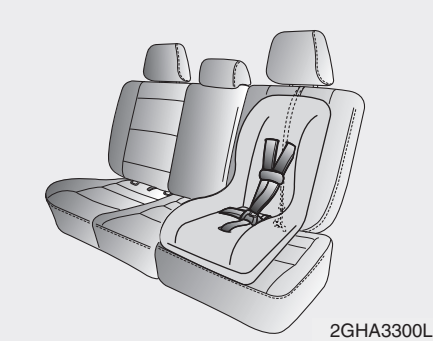

1. Route the child restraint seat strap over the seatback.

   For vehicles with adjustable headrest, route the tether strap under the headrest and between the headrest posts, otherwise route the tether strap over the top of the seatback.
2. Connect the tether strap hook to the appropriate child restraint hook holder and tighten to secure the seat.

⚠ WARNING

A child can be seriously injured or killed in a collision if the child restraint is not properly anchored to the car and the child is not properly restrained in the child restraint. Always follow the child seat manufacturer's instructions for installation and use.

⚠ WARNING - Tether strap

Never mount more than one child restraint to a single tether or to a single lower anchorage point. The increased load caused by multiple seats may cause the tethers or anchorage points to break, causing serious injury or death.

⚠ WARNING - Child restraint check

Check that the child restraint system is secure by pushing and pulling it in different directions. Incorrectly fitted child restraints may swing, twist, tip or separate causing death or serious injury.

⚠ WARNING - Child restraint anchorage

- **Child restraint anchorages are designed to withstand only those loads imposed by correctly fitted child restraints. Under no circumstances are they to be used for adult seat belts or harnesses or for attaching other items or equipment to the vehicle.**
- **The tether strap may not work properly if attached somewhere other than the correct tether anchor.**

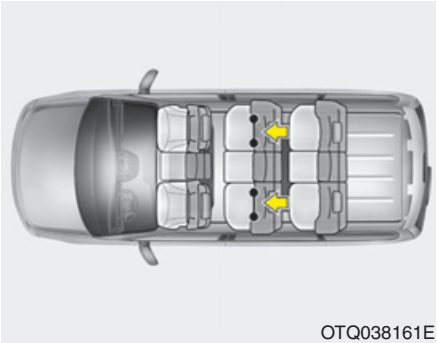
OTQ038161E

C030104BTQ

Securing a child restraint system with "ISOFIX" system and "Tether Anchorage" system (if equipped)

ISOFIX is a standardised method of fitting child seats that eliminates the need to use the standard adult seat belt to secure the seat in the vehicle. This enables a much more secure and positive location with the added benefit of easier and quicker installation.

An ISOFIX-seat can only be installed if it has vehicle-specific approval in accordance with the requirements of ECE-R44.

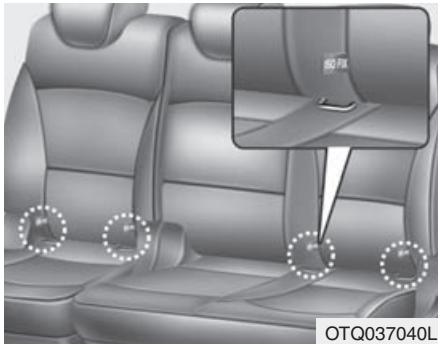
OTQ037040L

There are ISOFIX marks located on the lower portion of each side of the rear seatbacks. These marks indicate the position of the lower anchors for child restraints so equipped.

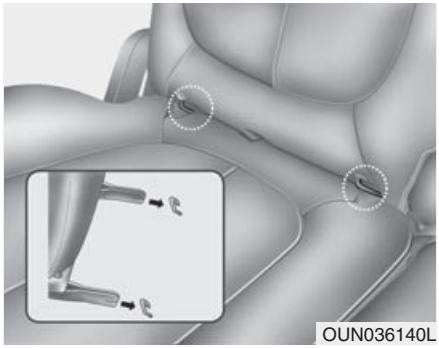
OUN036140L

On each side of the rear seat, between the cushion and backrest, are located a pair of ISOFIX anchorage points together with a top tether mounting behind the rear seats. During the installation, the seat has to be engaged at the anchorage-points in a way you can hear it clicking (check by pulling!) and has to be fixed with the Top Tether-belt on the belonging point behind rear seats.

The installing and the use of a child-seat has to be done according to the installing-manual, which is added to the ISOFIX-seat.

⚠ WARNING

Install the child restraint seat fully rearward against the seatback with the seatback in a vertical position, not reclined.

⚠ WARNING

- **When using the vehicle's "ISOFIX" system to install a child restraint system in the rear seat, all unused vehicle rear seat belt metal latch plates or tabs must be latched securely in their seat belt buckles and the seat belt webbing must be retracted behind the child restraint to prevent the child from reaching and taking hold of unretracted seat belts. Unlatched metal latch plates or tabs may allow the child to reach the unretracted seat belts which may result in strangulation and a serious injury or death to the child in the child restraint.**
- **Do not place anything around the lower anchors. Also make sure that the seat belt is not caught in the lower anchors.**

To secure the child restraint seat

1. To engage the child restraint seat to the ISOFIX anchor, insert the child restraint seat latch into the ISOFIX anchor. Listen for the audible “click” sound.

⚠ CAUTION

Do not allow the rear seat belt webbing to get scratched or pinched by the ISOFIX-seat latch and ISOFIX anchor during the installation.

2. Connect the tether strap hook to the child restraint hook holder and tighten to secure the seat. (Refer to the previous page.)

⚠ WARNING

- **Do not install a child restraint seat at the center of the rear seat using the vehicle's ISOFIX anchors. The ISOFIX anchors are only provided for the left and right outboard rear seating positions. Do not misuse the ISOFIX anchors by attempting to attach a child restraint seat in the middle of the rear seat to the ISOFIX anchors. In a crash, the child restraint seat ISOFIX attachments may not be strong enough to secure the child restraint seat properly in the center of the rear seat and may break, causing serious injury or death.**
- **Do not mount more than one child restraint to a child restraint lower anchorage point. The improper increased load may cause the anchorage points or tether anchor to break, causing serious injury or death.**

(Continued)

(Continued)

- **Attach the ISOFIX or ISOFIX-compatible child restraint seat only to the appropriate locations shown in the illustration.**
- **Always follow the installation and use instructions provided by the manufacturer of the child restraint.**

C030106ATQ

Child seat restraint suitability for vehicle ISOFIX positions- For Europe

Mass Group	Size Class	Fixture	vehicle ISOFIX positions	
			Front Passenger	Rear Outboard
Carrycot	F	ISO/L1	-	IUF
	G	ISO/L2	-	IUF
0 : UP to 10kg	E	ISO/R1	-	IUF
0+ : UP to 13kg	E	ISO/R1	-	IUF
	D	ISO/R2	-	IUF
	C	ISO/R3	-	IUF
I : 9 to 18kg	D	ISO/R2	-	IUF
	C	ISO/R3	-	IUF
	B	ISO/F2	-	IUF
	B1	ISO/F2X	-	IUF
	A	ISO/F3	-	IUF

IUF = Suitable for ISOFIX forward child restraints systems of universal category approved for use in the mass group.

* Both ISO/R2 and ISO/R3 are able to be set up only at the foremost position of the passenger seat.
* ISOFIX child restraint system size classes and fixtures

A - ISO/F3: Full-Height Forward-Facing toddler CRS (height 720mm)

B - ISO/F2: Reduced-Height Forward-Facing toddler CRS (height 650mm)

B1 - ISO/F2X: Reduced-Height Second Version Back Surface Shape Forward-Facing toddler CRS (height 650mm)

C - ISO/R3: Full-Size Rearward-Facing toddler CRS

D - ISO/R2: Reduced-Size Rearward-Facing toddler CRS

E - ISO/R1: Infant-Size Rearward-Facing CRS

F - ISO/L1: Left Lateral Facing position CRS (carry-cot)

G - ISO/L2: Right Lateral Facing position CRS (carry-cot)

AIR BAG - SUPPLEMENTAL RESTRAINT SYSTEM (IF EQUIPPED)

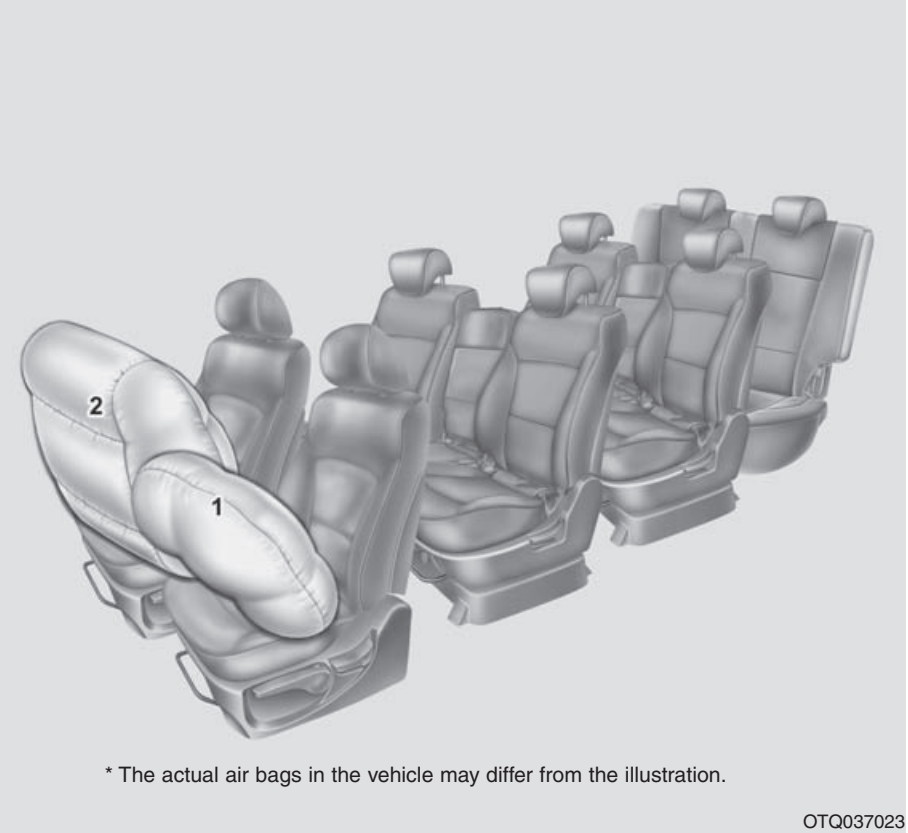

C040000ATQ
(1) Driver's front air bag
(2) Passenger's front air bag*
* : if equipped

⚠ WARNING
Even in vehicles with air bags, you and your passengers must always wear the safety belts provided in order to minimize the risk and severity of injury in the event of a collision or rollover.

C040900ATQ

How does the air bag system operate

- Air bags are activated (able to inflate if necessary) only when the ignition switch is turned to the ON or START position.
- Air bags inflate instantly in the event of a serious frontal collision in order to help protect the occupants from serious physical injury.
- There is no single speed at which the air bags will inflate.

  Generally, air bags are designed to inflate based upon the severity of a collision and its direction. These two factors determine whether the sensors produce an electronic deployment/ inflation signal.
- Air bag deployment depends on a number of factors including vehicle speed, angles of impact and the density and stiffness of the vehicles or objects which your vehicle hits in the collision. The determining factors are not limited to those mentioned above.
- The front air bags will completely inflate and deflate in an instant.

  It is virtually impossible for you to see the air bags inflate during an accident.

  It is much more likely that you will simply see the deflated air bags hanging out of their storage compartments after the collision.
- In order to help provide protection in a severe collision, the air bags must inflate rapidly. The speed of air bag inflation is a consequence of the extremely short time in which a collision occurs and the need to inflate the air bag between the occupant and the vehicle structures before the occupant impacts those structures. This speed of inflation reduces the risk of serious or life-threatening injuries in a severe collision and is thus a necessary part of air bag design.

  However, air bag inflation can also cause injuries which can include facial abrasions, bruises and broken bones because the inflation speed also causes the air bags to expand with a great deal of force.
- **There are even circumstances under which contact with the steering wheel air bag can cause fatal injuries, especially if the occupant is positioned excessively close to the steering wheel.**

⚠ WARNING

- **To avoid severe personal injury or death caused by deploying air bags in a collision, the driver should sit as far back from the steering wheel air bag as possible (at least 250 mm (10 inches) away). The front passengers should always move their seats as far back as possible and sit back in their seat.**
- **Air bags inflate instantly in the event of collision, and passengers may be injured by the air bag expansion force if they are not in proper position.**
- **Air bag inflation may cause injuries including facial or bodily abrasions, injuries from broken glasses or burns.**

C040902ATQ

Noise and smoke

When the air bags inflate, they make a loud noise and they leave smoke and powder in the air inside of the vehicle. This is normal and is a result of the ignition of the air bag inflator. After the air bag inflates, you may feel substantial discomfort in breathing due to the contact of your chest with both the seat belt and the air bag, as well as from breathing the smoke and powder. **Open your doors and/or windows as soon as possible after impact in order to reduce discomfort and prevent prolonged exposure to the smoke and powder.**

Though the smoke and powder are non-toxic, they may cause irritation to the skin (eyes, nose and throat, etc). If this is the case, wash and rinse with cold water immediately and consult a doctor if the symptom persists.

⚠ WARNING

When the air bags deploy, the air bag related parts in the steering wheel and/or instrument panel are very hot. To prevent injury, do not touch the air bag storage area's internal components immediately after an air bag has inflated.

C040903ATQ

Do not install a child restraint on the front passenger's seat.

Never place a rear-facing child restraint in the front passenger's seat. If the air bag deploys, it would impact the rear-facing child restraint, causing serious or fatal injury.

In addition, do not place front-facing child restraints in the front passenger's seat either. If the front passenger air bag inflates, it could cause serious or fatal injuries to the child.

⚠ WARNING

- **Extreme Hazard! Do not use a rearward facing child restraint on a seat protected by an air bag in front of it!**
- **Never put a child restraint in the front passenger's seat. If the front passenger air bag inflates, it can cause serious or fatal injuries.**

C041000AEN

Air bag warning light

The purpose of the air bag warning light in your instrument panel is to alert you of a potential problem with your air bag - Supplemental Restraint System (SRS).

When the ignition switch is turned ON, the warning light should illuminate for approximately 6 seconds, then go off.

Have the system checked if:

- The light does not turn on briefly when you turn the ignition ON.
- The light stays on after illuminating for approximately 6 seconds.
- The light comes on while the vehicle is in motion.

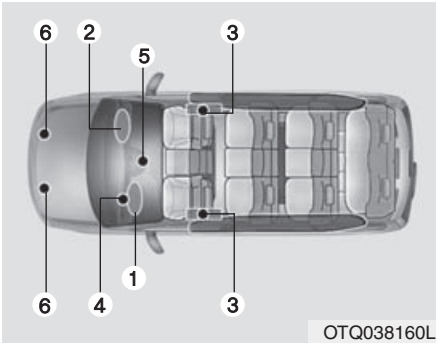

OTQ038160L

C040100ATQ

SRS components and functions

The SRS consists of the following components:

1. Driver's front air bag module
2. Passenger's front air bag module*
3. Retractor pre-tensioner assemblies*
4. Air bag warning light
5. SRS control module (SRSCM)
6. Front impact sensors

*: if equipped

The SRSCM continually monitors all SRS components while the ignition switch is ON to determine if a crash impact is severe enough to require air bag deployment or pre-tensioner seat belt deployment.

The SRS air bag warning light on the instrument panel will illuminate for about 6 seconds after the ignition switch is turned to the ON position, after which the SRS air bag warning light should go out.

If any of the following conditions occurs, this indicates a malfunction of the SRS. Have an authorized HYUNDAI dealer inspect the air bag system as soon as possible.

- The light does not turn on briefly when you turn the ignition ON.
- The light stays on after illuminating for approximately 6 seconds.
- The light comes on while the vehicle is in motion.

Driver's front air bag (1)

B240B01L

The front air bag modules are located both in the center of the steering wheel and in the front passenger's panel above the glove box. When the SRSCM detects a sufficiently severe impact to the front of the vehicle, it will automatically deploy the front air bags.

Driver's front air bag (2)

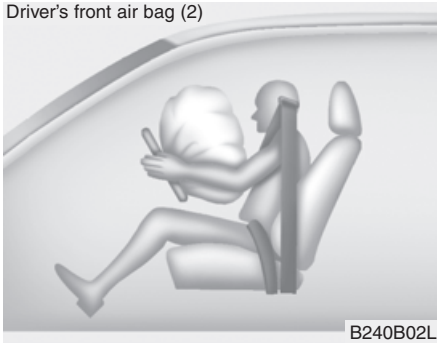

Upon deployment, tear seams molded directly into the pad covers will separate under pressure from the expansion of the air bags. Further opening of the covers then allows full inflation of the air bags.

Driver's front air bag (3)

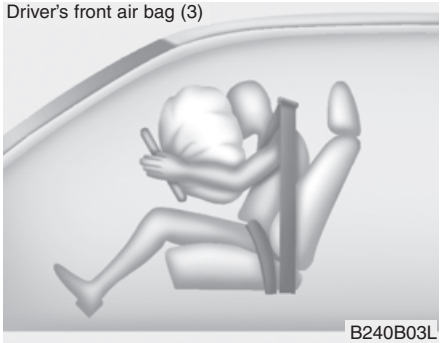

A fully inflated air bag, in combination with a properly worn seat belt, slows the driver's or the passenger's forward motion, reducing the risk of head and chest injury.

After complete inflation, the air bag immediately starts deflating, enabling the driver to maintain forward visibility and the ability to steer or operate other controls.

Passenger's front air bag

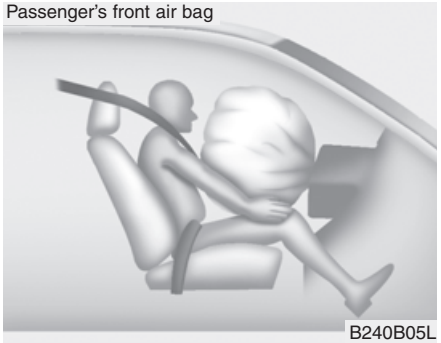

⚠ WARNING

- **Do not install or place any accessories (drink holder, cassette holder, sticker, etc.) on the front passenger's panel above the glove box in a vehicle with a passenger's air bag. Such objects may become dangerous projectiles and cause injury if the passenger's air bag inflates.**
- **When installing a container of liquid air freshener inside the vehicle, do not place it near the instrument cluster nor on the instrument panel surface.**

  It may become a dangerous projectile and cause injury if the passenger's air bag inflates.

⚠ WARNING

- **If an air bag deploys, there may be a loud noise followed by a fine dust released in the vehicle. These conditions are normal and are not hazardous - the air bags are packed in this fine powder. The dust generated during air bag deployment may cause skin or eye irritation as well as aggravate asthma for some persons. Always wash all exposed skin areas thoroughly with lukewarm water and a mild soap after an accident in which the air bags were deployed.**
- **The SRS can function only when the ignition switch is in the ON position. If the SRS air bag warning light does not illuminate, or continuously remains on after illuminating for about 6 seconds when the ignition switch is turned to the ON position, or after the engine is started, comes on while driving, the SRS is not working properly. If this occurs, have your vehicle immediately inspected by an authorized HYUNDAI dealer.**

(Continued)

(Continued)

- **Before you replace a fuse or disconnect a battery terminal, turn the ignition switch to the LOCK position and remove the ignition key. Never remove or replace the air bag related fuse(s) when the ignition switch is in the ON position. Failure to heed this warning will cause the SRS air bag warning light to illuminate.**

C040400BTQ

Driver's and passenger's front air bag (if equipped)

Your vehicle is equipped with a Supplemental Restraint (Air Bag) System and lap/shoulder belts at both the driver and passenger seating positions. The indications of the system's presence are the letters "SRS AIR BAG" embossed on the air bag pad cover in the steering wheel and the passenger's side front panel pad above the glove box.

The SRS consists of air bags installed under the pad covers in the center of the steering wheel and the passenger's side front panel above the glove box.

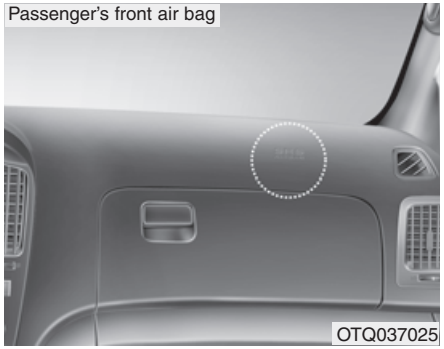

The purpose of the SRS is to provide the vehicle's driver and/or the front passenger with additional protection than that offered by the seat belt system alone in case of a frontal impact of sufficient severity.

⚠ WARNING

Always use seat belts and child restraints – every trip, every time, everyone! Air bags inflate with considerable force and in the blink of an eye. Seat belts help keep occupants in proper position to obtain maximum benefit from the air bag. Even with air bags, improperly and unbelted occupants can be severely injured when the air bag inflates. Always follow the precautions about seat belts, air bags and occupant safety contained in this manual.

(Continued)

(Continued)

To reduce the chance of serious or fatal injuries and receive the maximum safety benefit from your restraint system:

- **Never place a child in any child or booster seat in the front seat.**
- **ABC – Always Buckle Children in the back seat. It is the safest place for children of any age to ride.**
- **Front air bags can injure occupants improperly positioned in the front seats.**
- **Move your seat as far back as practical from the front air bags, while still maintaining control of the vehicle.**
- **You and your passengers should never sit or lean unnecessarily close to the air bags. Improperly positioned drivers and passengers can be severely injured by inflating air bags.**
- **Never lean against the door or center console – always sit in an upright position.**

(Continued)

(Continued)

- **No objects should be placed over or near the air bag modules on the steering wheel, instrument panel, and the front passenger's panel above the glove box, because any such object could cause harm if the vehicle is in a crash severe enough to cause the air bags to deploy.**
- **Do not tamper with or disconnect SRS wiring or other components of the SRS system. Doing so could result in injury, due to accidental deployment of the air bags or by rendering the SRS inoperative.**
- **If the SRS air bag warning light remains illuminated while the vehicle is being driven, have an authorized HYUNDAI dealer inspect the air bag system as soon as possible.**

(Continued)

(Continued)

- **Air bags can only be used once – have an authorized HYUNDAI dealer replace the air bag immediately after deployment.**
- **The SRS is designed to deploy the front air bags only when an impact is sufficiently severe and when the impact angle is less than 30° from the forward longitudinal axis of the vehicle. Additionally, the air bags will only deploy once. Seat belts must be worn at all times.**
- **Front air bags are not intended to deploy in side-impact, rear-impact or rollover crashes. In addition, front air bags will not deploy in frontal crashes below the deployment threshold.**

(Continued)

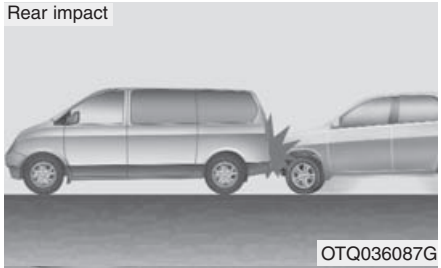

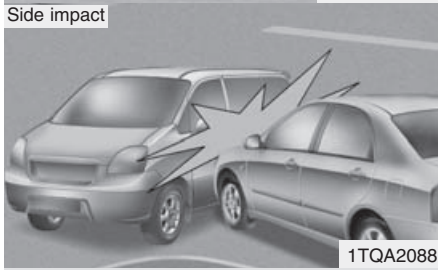

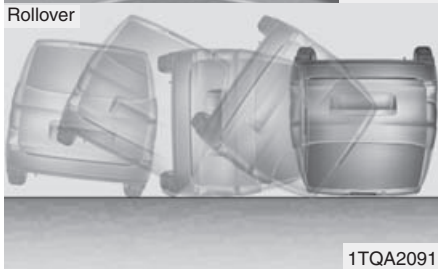

(Continued)

- **A child restraint system must never be placed in the front seat. The infant or child could be severely injured or killed by an air bag deployment in case of an accident.**
- **Children age 12 and under must always be properly restrained in the rear seat. Never allow children to ride in the front passenger seat. If a child over 12 must be seated in the front seat, he or she must be properly belted and the seat should be moved as far back as possible.**
- **For maximum safety protection in all types of crashes, all occupants including the driver should always wear their seat belts whether or not an air bag is also provided at their seating position to minimize the risk of severe injury or death in the event of a crash. Do not sit or lean unnecessarily close to the air bag while the vehicle is in motion.**

(Continued)

(Continued)

- **Sitting improperly or out of position can result in serious or fatal injury in a crash. All occupants should sit upright with the seat back in an upright position, centered on the seat cushion with their seat belt on, legs comfortably extended and their feet on the floor until the vehicle is parked and the ignition key is removed.**
- **The SRS air bag system must deploy very rapidly to provide protection in a crash. If an occupant is out of position because of not wearing a seat belt, the air bag may forcefully contact the occupant causing serious or fatal injuries.**

C040800BTQ

Why didn't my air bag go off in a collision? (Inflation and non-inflation conditions of the air bag)

There are many types of accidents in which the air bag would not be expected to provide additional protection.

These include rear impacts, second or third collisions in multiple impact accidents, as well as low speed impacts.

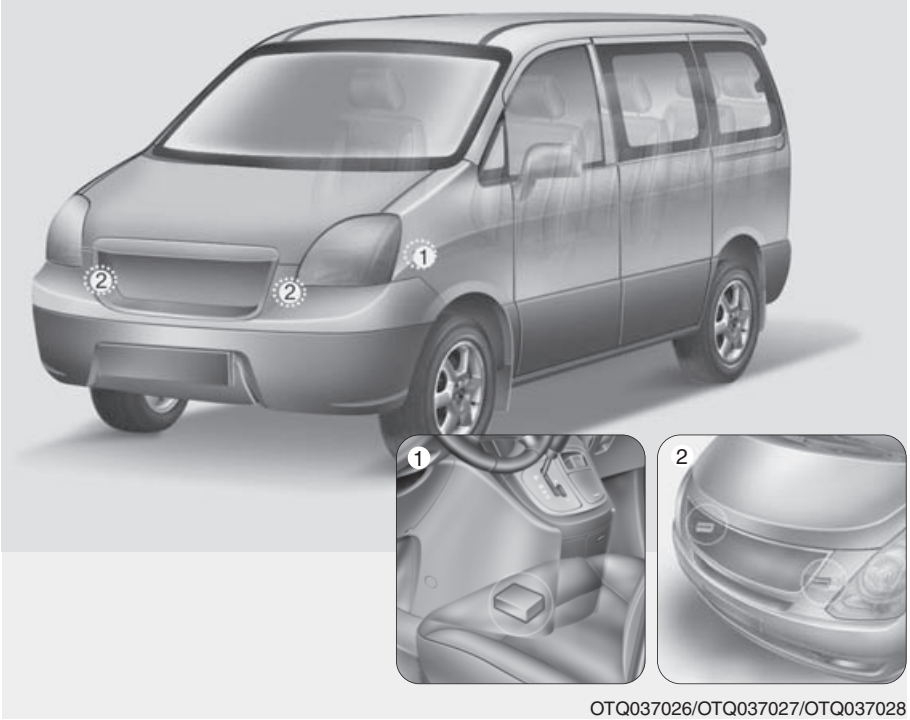

OTQ037026/OTQ037027/OTQ037028

Air bag collision sensors

(1) SRS control module

(2) Front impact sensor

⚠ WARNING

- **Do not hit or allow any objects to impact the locations where air bags or sensors are installed.**

  This may cause unexpected air bag deployment, which could result in serious personal injury or death.
- **If the installation location or angle of the sensors is altered in any way, the air bags may deploy when they should not or they may not deploy when they should, causing severe injury or death.**

  Therefore, do not try to perform maintenance on or around the air bag sensors. Have the vehicle checked and repaired by an authorized HYUNDAI dealer.

(Continued)

(Continued)

- **Problems may arise if the sensor installation angles are changed due to the deformation of the front bumper, body. Have the vehicle checked and repaired by an authorized HYUNDAI dealer.**
- **Your vehicle has been designed to absorb impact and deploy the air bag(s) in certain collisions. Installing bumper guards or replacing a bumper with non-genuine parts may adversely affect your vehicle's collision and air bag deployment performance.**

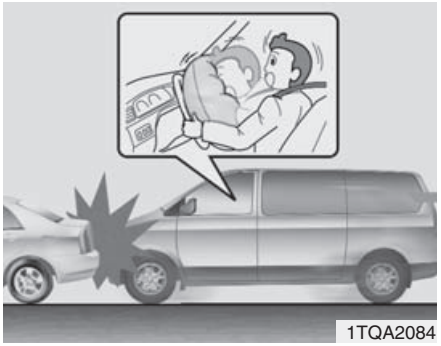

C040801ATQ

Air bag inflation conditions

Front air bags

Front air bags are designed to inflate in a frontal collision depending on the intensity, speed or angles of impact of the front collision.

Although the front air bags (driver's and front passenger's air bags) are designed to inflate only in frontal collisions, they also may inflate in other types of collisions if the front impact sensors detect a sufficient impact.

If the vehicle chassis is impacted by bumps or objects on unimproved roads, the air bags may deploy. Drive carefully on unimproved roads or on surfaces not designed for vehicle traffic to prevent unintended air bag deployment.

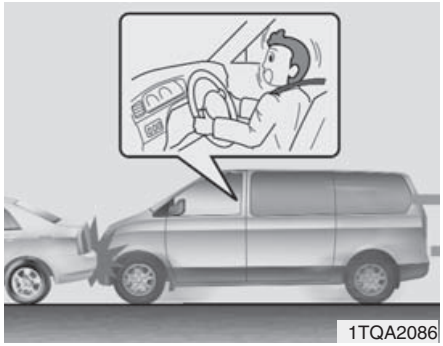

C040802ATQ

Air bag non-inflation conditions

- In certain low-speed collisions the air bags may not deploy. The air bags are designed not to deploy in such cases because they may not provide benefits beyond the protection of the seat belts in such collisions.

- Frontal air bags are not designed to inflate in rear collisions, because occupants are moved backward by the force of the impact. In this case, inflated air bags would not be able to provide any additional benefit.

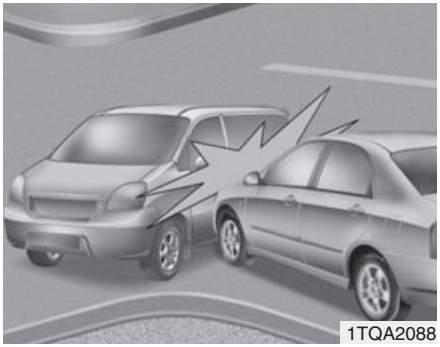
1TQA2088

- Front air bags may not inflate in side impact collisions, because occupants move to the direction of the collision, and thus in side impacts, frontal air bag deployment would not provide additional occupant protection.

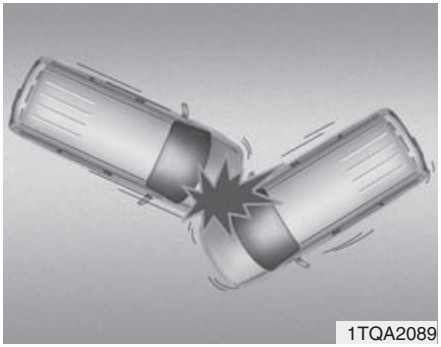
1TQA2089

- In an angled collision, the force of impact may direct the occupants in a direction where the air bags would not be able to provide any additional benefit, and thus the sensors may not deploy any air bags.

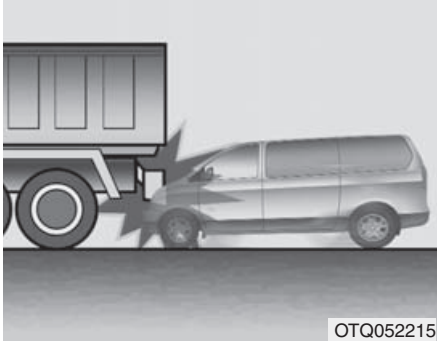
OTQ052215

- Just before impact, drivers often brake heavily. Such heavy braking lowers the front portion of the vehicle causing it to “ride” under a vehicle with a higher ground clearance. Air bags may not inflate in this "under-ride" situation because deceleration forces that are detected by sensors may be significantly reduced by such “under-ride” collisions.

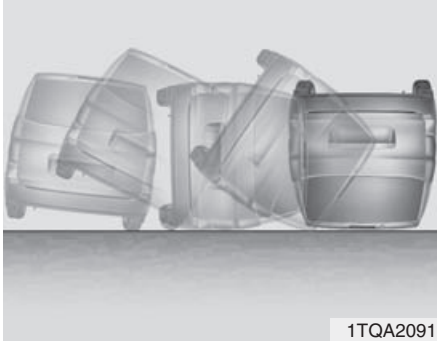
1TQA2091

- Air bags may not inflate in rollover accidents because air bag deployment would not provide protection to the occupants.

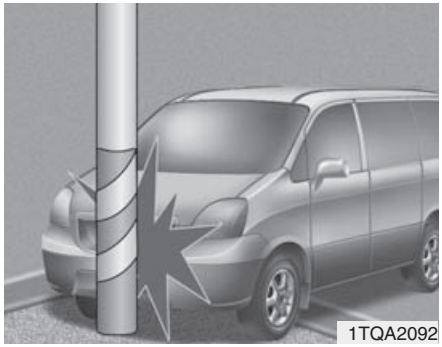
1TQA2092

- Air bags may not inflate if the vehicle collides with objects such as utility poles or trees, where the point of impact is concentrated to one area and the full force of the impact is not delivered to the sensors.

C041100ATQ

SRS Care

The SRS is virtually maintenance-free and so there are no parts you can safely service by yourself. If the SRS air bag warning light does not illuminate, or continuously remains on, have your vehicle immediately inspected by an authorized HYUNDAI dealer.

Any work on the SRS system, such as removing, installing, repairing, or any work on the steering wheel must be performed by an authorized HYUNDAI dealer. Improper handling of the SRS system may result in serious personal injury.

⚠ WARNING

- **Modification to SRS components or wiring, including the addition of any kind of badges to the pad covers or modifications to the body structure, can adversely affect SRS performance and lead to possible injury.**
- **For cleaning the air bag pad covers, use only a soft, dry cloth or one which has been moistened with plain water. Solvents or cleaners could adversely affect the air bag covers and proper deployment of the system.**
- **No objects should be placed over or near the air bag modules on the steering wheel, instrument panel, and the front passenger's panel above the glove box, because any such object could cause harm if the vehicle is in a crash severe enough to cause the air bags to inflate.**

(Continued)

(Continued)

- **If the air bags inflate, they must be replaced by an authorized HYUNDAI dealer.**
- **Do not tamper with or disconnect SRS wiring, or other components of the SRS system. Doing so could result in injury, due to accidental inflation of the air bags or by rendering the SRS inoperative.**
- **If components of the air bag system must be discarded, or if the vehicle must be scrapped, certain safety precautions must be observed. An authorized HYUNDAI dealer knows these precautions and can give you the necessary information. Failure to follow these precautions and procedures could increase the risk of personal injury.**
- **If your car was flooded and has soaked carpeting or water on the flooring, you shouldn't try to start the engine; have the car towed to an authorized HYUNDAI dealer.**

C041300ATQ

Additional safety precautions

- **Never let passengers ride in the cargo area or on top of a folded-down back seat.** All occupants should sit upright, fully back in their seats with their seat belts on and their feet on the floor.
- **Passengers should not move out of or change seats while the vehicle is moving.** A passenger who is not wearing a seat belt during a crash or emergency stop can be thrown against the inside of the vehicle, against other occupants, or out of the vehicle.
- **Each seat belt is designed to restrain one occupant.** If more than one person uses the same seat belt, they could be seriously injured or killed in a collision.
- **Do not use any accessories on seat belts.** Devices claiming to improve occupant comfort or reposition the seat belt can reduce the protection provided by the seat belt and increase the chance of serious injury in a crash.
- **Passengers should not place hard or sharp objects between themselves and the air bags.** Carrying hard or sharp objects on your lap or in your mouth can result in injuries if an air bag inflates.

- **Keep occupants away from the air bag covers.** All occupants should sit upright, fully back in their seats with their seat belts on and their feet on the floor. If occupants are too close to the air bag covers, they could be injured if the air bags inflate.
- **Do not attach or place objects on or near the air bag covers.** Any object attached to or placed on the front air bag covers could interfere with the proper operation of the air bags.
- **Do not modify the front seats.** Modification of the front seats could interfere with the operation of the supplemental restraint system sensing components.
- **Do not place items under the front seats.** Placing items under the front seats could interfere with the operation of the supplemental restraint system sensing components and wiring harnesses.
- **Never hold an infant or child on your lap.** The infant or child could be seriously injured or killed in the event of a crash. All infants and children should be properly restrained in appropriate child safety seats or seat belts in the rear seat.

⚠ WARNING

- **Sitting improperly or out of position can cause occupants to be shifted too close to a deploying air bag, strike the interior structure or be thrown from the vehicle resulting in serious injury or death.**
- **Always sit upright with the seatback in an upright position, centered on the seat cushion with your seat belt on, legs comfortably extended and your feet on the floor.**

C041400AUN

Adding equipment to or modifying your air bag-equipped vehicle

If you modify your vehicle by changing your vehicle's frame, bumper system, front end or side sheet metal or ride height, this may affect the operation of your vehicle's air bag system.

* : if equipped

OTQ037029

C041200AUN

Air bag warning label

Air bag warning labels are attached to alert the driver and passengers of potential risk of air bag system.

Note that these government warnings focus on the risk to children, we also wants you to be aware of the risks which adults are exposed to. Those have been described in previous pages.

Keys / 4-2
Remote keyless entry / 4-4
Theft-alarm system / 4-6
Door locks / 4-8
Tailgate / 4-13
Windows / 4-16
Hood / 4-21
Fuel filler lid / 4-23

Features of your vehicle

4

Steering wheel / 4-26
Mirrors / 4-28
Instrument cluster / 4-32
Rear parking assist system / 4-45
Hazard warning flasher / 4-48
Lighting / 4-48
Wipers and washers / 4-53
Interior light / 4-56
Defroster / 4-58
Manual climate control system / 4-59
Windshield defrosting and defogging / 4-70
Storage compartment / 4-72
Interior features / 4-74
Audio system / 4-79

KEYS

D010100AEN

Record your key number

The key code number is stamped on the bar code tag attached to the key set. Should you lose your keys, this number will enable an authorized HYUNDAI dealer to duplicate the keys easily. Remove the bar code tag and store it in a safe place. Also, record the code number and keep it in a safe place (not in the vehicle).

D010200AEN

Key operations

Used to start the engine, lock and unlock the doors.

⚠ WARNING - Ignition key

Leaving children unattended in a vehicle with the ignition key is dangerous even if the key is not in the ignition switch. Children copy adults and they could place the key in the ignition switch. The ignition key would enable children to operate power windows or other controls, or even make the vehicle move, which could result in serious bodily injury or even death. Never leave the keys in your vehicle with unsupervised children.

⚠ WARNING

Use only HYUNDAI original parts for the ignition key in your vehicle. If an aftermarket key is used, the ignition switch may not return to ON after START. If this happens, the starter will continue to operate causing damage to the starter motor and possible fire due to excessive current in the wiring.

D010300CEN

Immobilizer system (if equipped)

Your vehicle may be equipped with an electronic engine immobilizer system to reduce the risk of unauthorized vehicle use.

Your immobilizer system is comprised of a small transponder in the ignition key and electronic devices inside the vehicle.

With the immobilizer system, whenever you insert your ignition key into the ignition switch and turn it to ON, it checks and determines and verifies if the ignition key is valid or not.

If the key is determined to be valid, the engine will start.

If the key is determined to be invalid, the engine will not start.

To deactivate the immobilizer system:

Insert the ignition key into the key cylinder and turn it to the ON position.

To activate the immobilizer system:

Turn the ignition key to the OFF position. The immobilizer system activates automatically. Without a valid ignition key for your vehicle, the engine will not start.

⚠ WARNING

In order to prevent theft of your vehicle, do not leave spare keys anywhere in your vehicle. Your Immobilizer password is a customer unique password and should be kept confidential. Do not leave this number anywhere in your vehicle.

✻ NOTICE

When starting the engine, do not use the key with other immobilizer keys around. Otherwise the engine may not start or may stop soon after it starts. Keep each key separate in order to avoid a starting malfunction.

⚠ CAUTION

Do not put metal accessories near the ignition switch.

The engine may not start for the metal accessories may interrupt the transponder signal from normally transmitting

✻ NOTICE

If you need additional keys or lose your keys, consult an authorized HYUNDAI dealer.

⚠ CAUTION

The transponder in your ignition key is an important part of the immobilizer system. It is designed to give years of trouble-free service, however you should avoid exposure to moisture, static electricity and rough handling. Immobilizer system malfunction could occur.

⚠ CAUTION

Do not change, alter or adjust the immobilizer system because it could cause the immobilizer system to malfunction and should only be serviced by an authorized HYUNDAI dealer.

Malfunctions caused by improper alterations, adjustments or modifications to the immobilizer system are not covered by your vehicle manufacturer warranty.

REMOTE KEYLESS ENTRY (IF EQUIPPED)

OTQ047002

Remote keyless entry system operations

D020101APA

Lock

All doors (and tailgate) are locked if the lock/unlock button (1) is pressed when a front door is unlocked.

If all doors (and tailgate) are closed, the hazard warning lights blink once to indicate that all doors (and tailgate) are locked.

However, if any door (or tailgate) remains open, the hazard warning lights will not operate. If all doors (and tailgate) are closed after the lock button is pressed, the hazard warning lights blink.

D020102APA

Unlock

All doors (and tailgate) are unlocked if the lock/unlock button (1) is pressed when both front doors are locked.

The hazard warning lights will blink twice again to indicate that all doors (and tailgate) are unlocked.

After depressing this button, the doors (and tailgate) will be locked automatically unless you open any door within 30 seconds.

D020200BEN

Transmitter precautions

✻ NOTICE

The transmitter will not work if any of following occur:

- **The ignition key is in ignition switch.**
- **You exceed the operating distance limit (about 10 m [30 feet]).**
- **The battery in the transmitter is weak.**
- **Other vehicles or objects may be blocking the signal.**
- **The weather is extremely cold.**

(Continued)

(Continued)

- **The transmitter is close to a radio transmitter such as a radio station or an airport which can interfere with normal operation of the transmitter.**

When the transmitter does not work correctly, open and close the door with the ignition key. If you have a problem with the transmitter, contact an authorized HYUNDAI dealer.

- **If the transmitter is in close proximity to your cell phone or smart phone, the signal from the transmitter could be blocked by normal operation of your cell phone or smart phone. This is especially important when the phone is active such as making call, receiving calls, text messaging, and/or sending/receiving emails. Avoid placing the transmitter and your cell phone or smart phone in the same pants or jacket pocket and maintain adequate distance between the two devices.**

⚠ CAUTION

Keep the transmitter away from water or any liquid. If the keyless entry system is inoperative due to exposure to water or liquids, it will not be covered by your manufacturer vehicle warranty.

⚠ CAUTION

Changes or modifications not expressly approved by the party responsible for compliance could void the user's authority to operate the equipment. If the keyless entry system is inoperative due to changes or modifications not expressly approved by the party responsible for compliance, it will not be covered by your manufacturer's vehicle warranty.

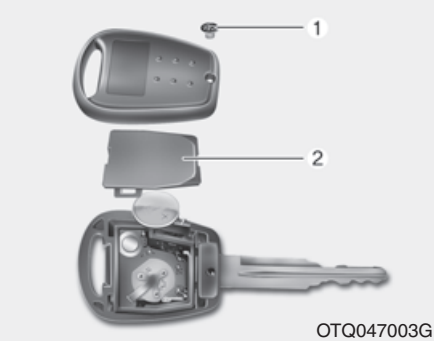

D020300BTQ

Battery replacement

The transmitter uses a 3 volt lithium battery which will normally last for several years. When replacement is necessary, use the following procedure.

1. Remove the screw (1) using a cross-tip screwdriver.
2. Insert a slim tool into the slot and gently pry open the transmitter center cover.
3. Remove the battery cover (2).
4. Replace the battery with a new one. When replacing the battery, make sure the battery's positive "+" symbol faces up as indicated in the illustration.
5. Install the battery in the reverse order of removal.

⚠ CAUTION

- ***The keyless entry system transmitter is designed to give you years of trouble-free use, however it can malfunction if exposed to moisture or static electricity. If you are unsure how to use your transmitter or replace the battery, contact an authorized HYUNDAI dealer.***
- ***Using the wrong battery can cause the transmitter to malfunction. Be sure to use the correct battery.***
- ***To avoid damaging the transmitter, don't drop it, get it wet, or expose it to heat or sunlight.***
- ***An inappropriately disposed battery can be harmful to the environment and human health.***

  Dispose the battery according to your local law(s) or regulation.

THEFT-ALARM SYSTEM (IF EQUIPPED)

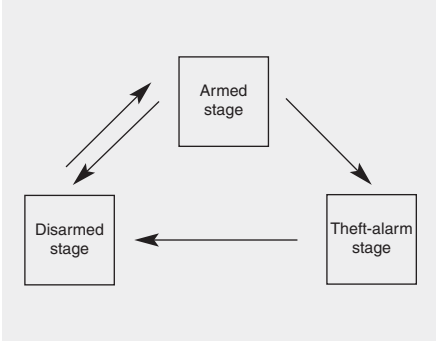

D030000AEN

This system is designed to provide protection from unauthorized entry into the car. This system is operated in three stages: the first is the "Armed" stage, the second is the "Theft-alarm" stage, and the third is the "Disarmed" stage. If triggered, the system provides an audible alarm with blinking of the hazard warning lights.

D030100ATQ

Armed stage

Park the car and stop the engine. Arm the system as described below.

1. Remove the ignition key from the ignition switch and exit the vehicle.
2. Make sure that all doors (and tailgate) and engine hood are closed and latched.
3. Lock the doors using the transmitter of the keyless entry system.

After completion of the steps above, the hazard warning lights will blink once to indicate that the system is armed.

If any door (or tailgate) or engine hood remains open, the hazard warning lights will not blink and the theft-alarm will not arm. If all doors (and tailgate) and engine hood are closed after the lock button is pressed, the hazard warning lights blink once.

✻ NOTICE

The theft-alarm system by the key can be activated by an authorized HYUNDAI dealer.
If you want this feature, consult an authorized HYUNDAI dealer.

Do not arm the system until all passengers have left the vehicle. If the system is armed while a passenger(s) remains in the vehicle, the alarm may be activated when the remaining passenger(s) leave the vehicle. If any door (or tailgate) or engine hood is opened within 30 seconds after the system enters the armed stage, the system is disarmed to prevent an unnecessary alarm.

D030200AEN-EE

Theft-alarm stage

The alarm will be activated if any of the following occurs while the system is armed.

- A front or rear door is opened without using the transmitter.
- The tailgate is opened without using the transmitter.
- The engine hood is opened.

The horn will sound and the hazard warning lights will blink continuously for approximately 30 seconds. To turn off the system, unlock the doors with the transmitter.

D030400BTQ

Disarmed stage

The system will be disarmed when the doors (and tailgate) are unlocked with the transmitter.

After depressing the unlock button, the hazard warning lights will blink twice to indicate that the system is disarmed.

After depressing the unlock button, if any door (or tailgate) is not opened within 30 seconds, the system will be rearmed.

✻ NOTICE - Non-immobilizer system

- **Avoid trying to start the engine while the alarm is activated. The vehicle starting motor is disabled during the theft-alarm stage.**
  If the system is not disarmed with the transmitter, insert the key into the ignition switch, turn the ignition switch to the ON position and wait for 30 seconds. Then the system will be disarmed.
- **If you lose your keys, consult your authorized HYUNDAI dealer.**

✻ NOTICE - Immobilizer system

- **If the system is not disarmed with the transmitter, insert the key into the ignition switch and start the engine. Then the system will be disarmed.**
- **If you lose your keys, consult your authorized HYUNDAI dealer.**

⚠ CAUTION

Do not change, alter or adjust the theft-alarm system because it could cause the theft-alarm system to malfunction and should only be serviced by an authorized HYUNDAI dealer.

Malfunctions caused by improper alterations, adjustments or modifications to the theft-alarm system are not covered by your vehicle manufacturer warranty.

DOOR LOCKS

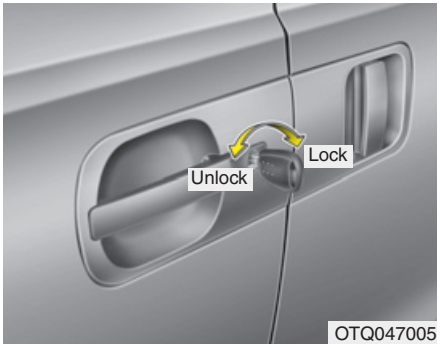

D050100CTQ

Operating door locks from outside the vehicle

- Turn the key toward the rear of the vehicle to lock and toward the front of the vehicle to unlock.
- If you lock/unlock the driver's door with a key, all vehicle doors will lock/unlock automatically. (if equipped)
- If you lock the front passenger's door with a key all vehicle doors will lock automatically. (if equipped)
- Doors can also be locked and unlocked with the transmitter. (if equipped)
- Once the doors are unlocked, they may be opened by pulling the door handle.
- When closing the door, push the door by hand. Make sure that doors are closed securely.

✻ NOTICE

- **In cold and wet climates, door lock and door mechanisms may not work properly due to freezing conditions.**
- **If the door is locked/unlocked multiple times in rapid succession with either the vehicle key or door lock switch, the system may stop operating temporarily in order to protect the circuit and prevent damage to system components.**

⚠ WARNING

- **If you do not close the door securely, the door may open again.**
- **Be careful that someone's body and hands are not trapped when closing the door.**

- Once the rear doors are unlocked, they may be opened by pulling the door handle and sliding the door towards the rear of the vehicle.
- When the rear door is fully open, the door will lock into an open position. To close the door, pull out the door handle and slide the door towards the front of vehicle.

⚠ WARNING

When the rear sliding door is not fully open, it is not latched and may move unintentionally. This could result in a serious injury.

⚠ CAUTION

The left sliding door cannot be opened when the fuel filler lid is open. However, if the fuel filler lid is opened after the door is opened slightly, the left sliding door can be slide rearward. Close the left sliding door to prevent possible damage to the door or the fuel filler lid.

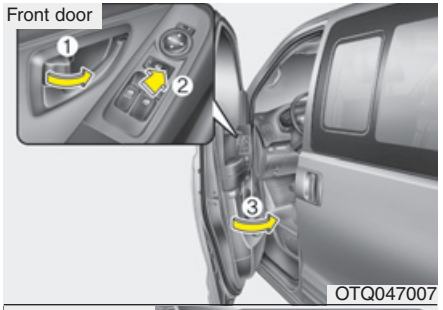

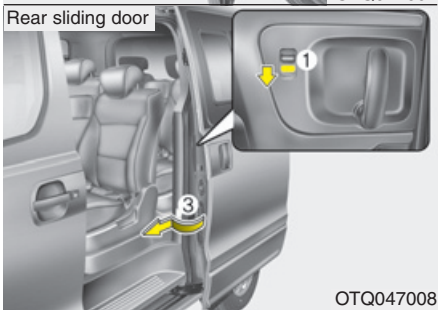

- To lock a door without the key, push the inside door lock button (1) or central door lock switch (2) to the “Lock” position and close the door (3).
- If you lock the door with the central door lock switch (2), all vehicle doors will lock automatically. (if equipped)

✻ NOTICE

Always remove the ignition key, engage the parking brake, close all windows and lock all doors when leaving your vehicle unattended.

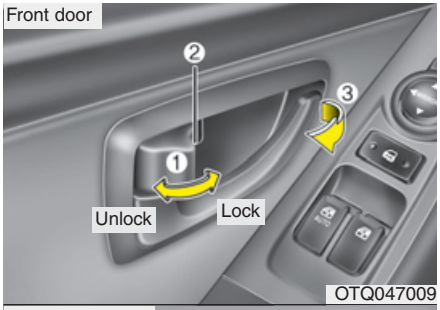

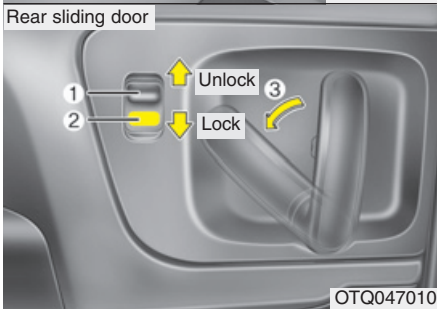

Operating door locks from inside the vehicle

D050201ATQ

With the door lock button

- To unlock a door, push the door lock button (1) to the “Unlock” position. The red mark (2) on button will be visible.
- To lock a door, push the door lock button (1) to the “Lock” position. If the door is locked properly, the red mark (2) on the door lock button will not be visible.
- To open a door, pull the door handle (3) outward.
- If the inner door handle of the driver’s door is pulled when the door lock button is in lock position, the button is unlocked and door opens. (if equipped)
- Front doors cannot be locked if the ignition key is in the ignition switch and any front door is open.

⚠ WARNING - Door lock malfunction

If a power door lock ever fails to function while you are in the vehicle, try one or more of the following techniques to exit:

- **Operate the door unlock feature repeatedly (both electronic and manual) while simultaneously pulling on the door handle.**
- **Operate the other door locks and handles, front and rear.**
- **Lower a front window and use the key to unlock the door from outside.**
- **Move to the cargo area and open the tailgate. (if equipped)**

D050202ATQ

With central door lock switch (if equipped)

Operate by depressing the central door lock switch.

- When pushing down on the portion (1) of the switch, all vehicle doors will lock.
- When pushing down on the portion (2) of the switch, all vehicle doors will unlock.
- If the key is in the ignition switch and any front door is open, the doors will not lock when the portion (1) of central door lock switch is pressed.

⚠ WARNING - Doors

- **The doors should always be fully closed and locked while the vehicle is in motion to prevent accidental opening of the door. Locked doors will also discourage potential intruders when the vehicle stops or slows.**
- **Be careful when opening doors and watch for vehicles, motorcycles, bicycles or pedestrians approaching the vehicle in the path of the door. Opening a door when something is approaching can cause damage or injury.**

⚠ WARNING - Unlocked vehicles

Leaving your vehicle unlocked can invite theft or possible harm to you or others from someone hiding in your vehicle while you are gone. Always remove the ignition key, engage the parking brake, close all windows and lock all doors when leaving your vehicle unattended.

⚠ WARNING - Unattended children

An enclosed vehicle can become extremely hot, causing death or severe injury to unattended children or animals who cannot escape the vehicle. Furthermore, children might operate features of the vehicle that could injure them, or they could encounter other harm, possibly from someone gaining entry to the vehicle. Never leave children or animals unattended in your vehicle.

D050300AUN

Impact sensing door unlock system (if equipped)

All doors will be automatically unlocked when the impact is delivered to impact sensors while the ignition switch ON.

However, the doors may not be unlocked if mechanical problems occur with the door lock system or battery.

D050400AFD

Speed sensing door lock system (if equipped)

When the speed of the vehicle keeps above 40 km/h for 1 second, it will automatically lock all doors. For activation of this feature, contact an authorized HYUNDAI dealer.

✻ NOTICE

An authorized HYUNDAI dealer can select some auto door lock/unlock features as follows;

- **Speed sensing auto door locking**
- **Auto door unlock when the ignition key is removed from the ignition switch**

If you want to select a door lock/unlock feature, consult an authorized HYUNDAI dealer.

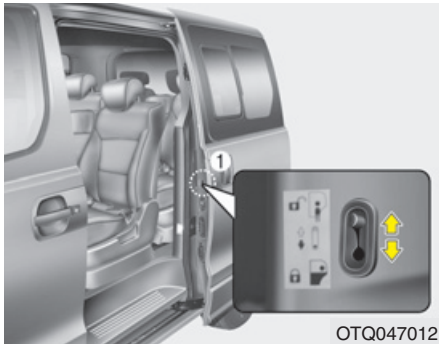

D050500ATQ

Child-protector rear door lock

The child safety lock is provided to help prevent children from accidentally opening the rear doors from inside the vehicle. The rear door safety locks should be used whenever children are in the vehicle.

1. Open the rear door.
2. Push the child safety lock located on the front edge of the door to the lock (🔒) position. When the child safety lock is in the lock position, the rear door will not open even though the inner door handle is pulled.
3. Close the rear door.

To open the rear door, pull the outside door handle (1).

Even though the doors may be unlocked, the rear door will not open by pulling the inner door handle until the rear door child safety lock is unlocked (🔓).

⚠ WARNING - Rear door locks

If children accidentally open the rear doors while the vehicle is in motion, they could fall out and be severely injured or killed. To prevent children from opening the rear doors from the inside, the rear door safety locks should be used whenever children are in the vehicle.

TAILGATE

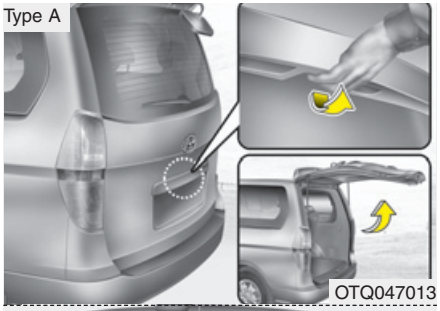

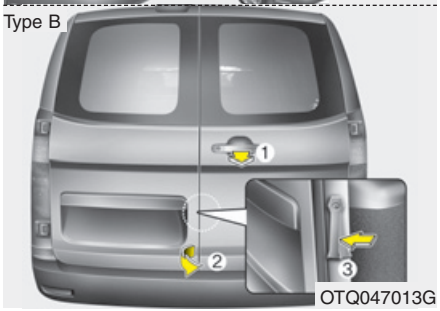

D070100ATQ

Opening the tailgate

- The tailgate is locked or unlocked when all doors are locked or unlocked with the key, transmitter or central door lock switch. (if equipped)
- The tailgate can also be locked and unlocked with the key if the vehicle is equipped with a key hole on the tailgate.
- If unlocked, the tailgate can be opened by pressing the handle switch and pulling the handle up. (Type A)
- If unlocked, the tailgate can be opened by pulling the handle. (Type B)

✻ NOTICE

In cold and wet climates, door lock and door mechanisms may not work properly due to freezing conditions.

⚠ WARNING

The tailgate swings upward. Make sure no objects or people are near the rear of the vehicle when opening the tailgate.

⚠ CAUTION

Make certain that you close the tailgate before driving your vehicle. Possible damage may occur to the tailgate lift cylinders and attached hardware if the tailgate is not closed prior to driving.

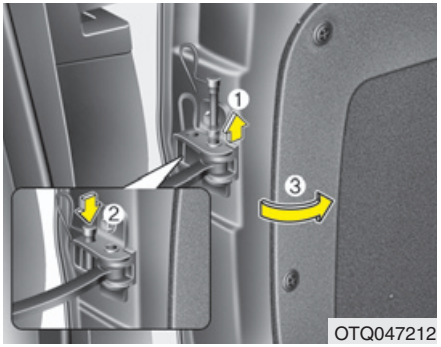

If your vehicle is equipped with twin swing type tail gates, you may fully open (if equipped) as follows ;

1. Open the tail gate.
2. Remove the pin from the bracket hole and insert the pin into the pin hole.
3. Open the tail gate fully.

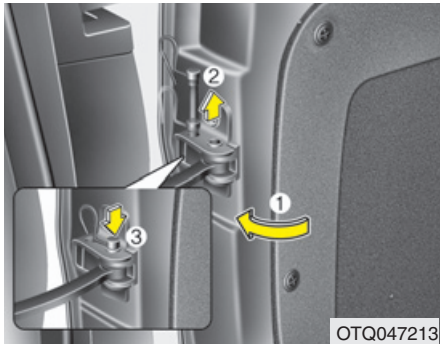

4. After use, before closing the tail gate, pull out the pin from the pin hole.
5. Align the checker arm hole and the tail gate bracket hole, and insert the pin into the bracket hole.
6. Close the tail gate.

⚠ CAUTION

Insert the pin into the bracket hole before closing the tail gate. Or the tail gate checker and/or vehicle damage is possible and a dangerous situation may occur.

D070200AUN

Closing the tailgate

To close the tailgate, lower and push down the tailgate firmly. Make sure that the tailgate is securely latched.

⚠ WARNING - Exhaust fumes

If you drive with the tailgate open, you will draw dangerous exhaust fumes into your vehicle which can cause serious injury or death to vehicle occupants.

If you must drive with the tailgate open, keep the air vents and all windows open so that additional outside air comes into the vehicle.

⚠ WARNING - Rear cargo area

Occupants should never ride in the rear cargo area where no restraints are available. To avoid injury in the event of an accident or sudden stops, occupants should always be properly restrained.

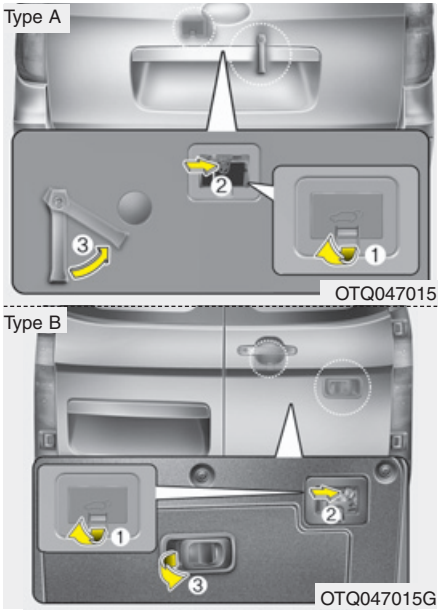

D070300AEN

Emergency tailgate safety release (if equipped)

Your vehicle is equipped with the emergency tailgate safety release lever located on the bottom of the tailgate.

When someone is inadvertently locked in the luggage compartment, if the lever is pushed, the tailgate latch mechanism is released and the tailgate is opened by pushing rearward.

⚠ WARNING

- **For emergencies, be fully aware of the location of the emergency tailgate safety release lever in this vehicle and how to open the tailgate if you are accidentally locked in the luggage compartment.**
- **No one should be allowed to occupy the luggage compartment of the vehicle at any time. The luggage compartment is a very dangerous location in the event of a crash.**
- **Use the release lever for emergencies only. Use extreme caution, especially while the vehicle is in motion.**

WINDOWS

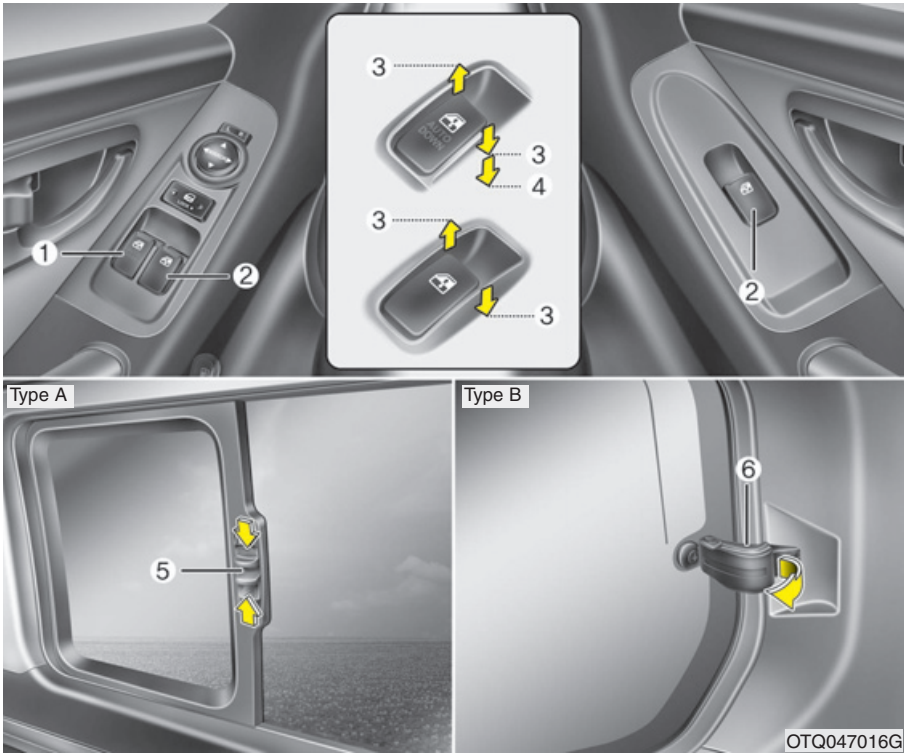

D080000ATQ

(1) Driver's door power window switch
(2) Front passenger's door power window switch
(3) Window opening and closing
(4) Automatic power window down (Driver's window, if equipped)
(5) Rear seat window (Type A)
(6) Rear seat window (Type B)

✻ NOTICE

In cold and wet climates, power windows may not work properly due to freezing conditions.

D080100AUN

Power windows (if equipped)

The ignition switch must be in the ON position for power windows to operate.

Each door has a power window switch that controls the door's window. The driver has a power window lock switch which can block the operation of passenger windows. The power windows can be operated for approximately 30 seconds after the ignition key is removed or turned to the ACC or LOCK position. However, if the front doors are opened, the power windows cannot be operated within the 30 second period after the ignition key removal.

✻ NOTICE

While driving, if you notice buffeting and pulsation (wind shock) with either side window open, you should open the opposite window slightly to reduce the condition.

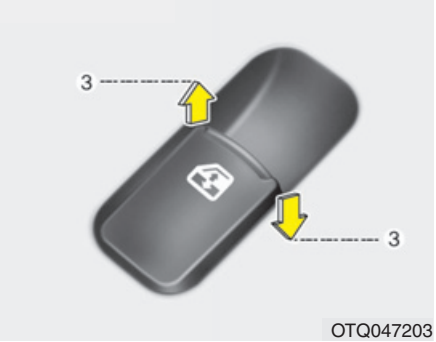

OTQ047203

D080101ATQ

Type A

Window opening and closing (if equipped)

The driver's door has a master power window switch that controls all the windows in the vehicle.

To open or close a window, press down or pull up the front portion of the corresponding switch to the first detent position (3).

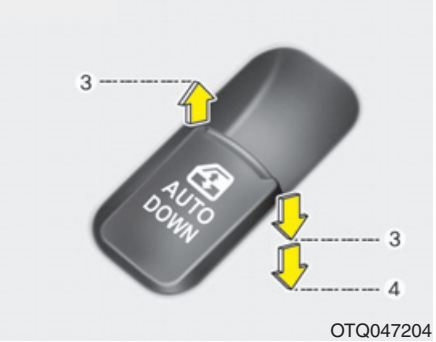

OTQ047204

D080102ATQ

Type B

Auto down window (Driver's window, if equipped)

Depressing the power window switch momentarily to the second detent position (4) completely lowers the driver's window even when the switch is released. To stop the window at the desired position while the window is in operation, pull up the switch momentarily to the opposite direction of the window movement.

⚠ CAUTION

- *To prevent possible damage to the power window system, do not open or close two windows or more at the same time. This will also ensure the longevity of the fuse.*
- *Never try to operate the main switch on the driver's door and the individual door window switch in opposing directions at the same time. If this is done, the window will stop and cannot be opened or closed.*

⚠ WARNING - Windows

- **NEVER leave the ignition key in the vehicle.**
- **NEVER leave any child unattended in the vehicle. Even very young children may inadvertently cause the vehicle to move, entangle themselves in the windows, or otherwise injure themselves or others.**
- **Always double check to make sure all arms, hands, head and other obstructions are safely out of the way before closing a window.**
- **Do not allow children to play with the power windows. Serious injury can result from unintentional window operation by the child.**
- **Do not extend face or arms outside through the window opening while driving.**

OTQ047204E

D080103ATQ

Type C

Auto up/down window (Driver's window, if equipped)

Depressing or pulling up the power window switch momentarily to the second detent position (4) completely lowers or lifts the window even when the switch is released. To stop the window at the desired position while the window is in operation, pull up or depress and release the switch to the opposite direction of the movement.

If the power window is not operated correctly, the automatic power window system must be reset as follows:

1. Turn the ignition switch to the ON position.
2. Close driver's window and continue pulling up on driver's power window switch for at least 1 second after the window is completely closed.

Automatic reversal

If the upward movement of the window is blocked by an object or part of the body, the window will detect the resistance and will stop upward movement. The window will then lower approximately 30 cm (11.8 in.) to allow the object to be cleared.

If the window detects the resistance while the power window switch is pulled up continuously, the window will stop upward movement then lower approximately 2.5 cm (1 in.). And if the power window switch is pulled up continuously again within 5 seconds after the window is lowered by the automatic window reversal feature, the automatic window reversal will not operate.

✻ NOTICE

The automatic reverse feature for the driver's window is only active when the "auto up" feature is used by fully pulling up the switch. The automatic reverse feature will not operate if the window is raised using the halfway position on the power window switch.

⚠ WARNING

Always check for obstructions before raising any window to avoid injuries or vehicle damage. If an object less than 4 mm (0.16 in.) in diameter is caught between the window glass and the upper window channel, the automatic reverse window may not detect the resistance and will not stop and reverse direction.

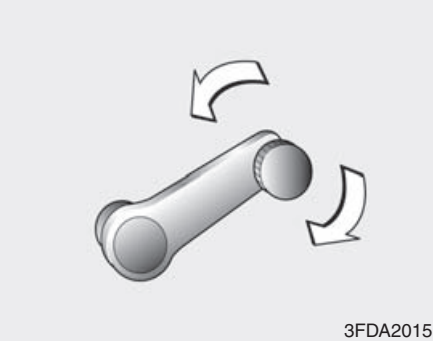

D080200AFD

Manual windows (if equipped)

To raise or lower the window, turn the window regulator handle clockwise or counterclockwise.

⚠ WARNING

When opening or closing the windows, make sure your passenger's arms, hands and body are safely out of the way.

D080200ATQ

Rear seat window (Type A, if equipped)

To open the window, move the window while pressing the handle the direction of the arrow.

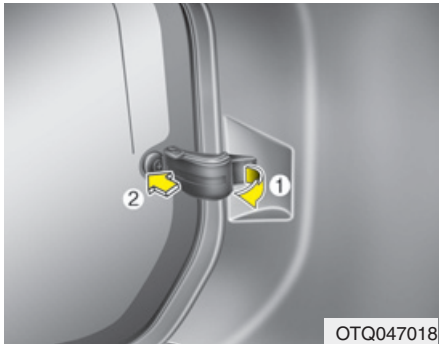

Rear seat window (Type B, if equipped)

To open the windows, pull the rear portion of the latch out. Swing the latch forward and out, then lock it into the open position by pushing outward until you hear a click. To close the windows, pull the handle inward. Then push the handle rearward until you hear a click.

✻ NOTICE

In cold and wet climates, rear quarter panel windows may not work properly due to freezing conditions.

HOOD

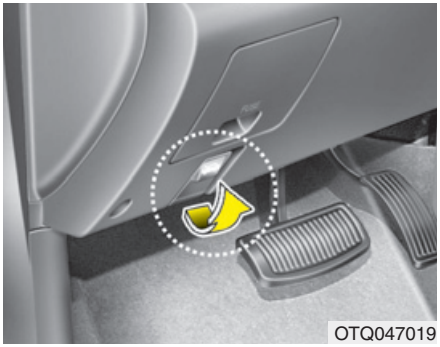

D090100BUN

Opening the hood

1. Pull the release lever to unlatch the hood. The hood should pop open slightly.

⚠ WARNING

Open the hood after turning off the engine on a flat surface, shifting the shift lever to the P(Park) position for automatic transmission and to the 1st(First) gear or R(Reverse) for manual transmission, and setting the parking brake.

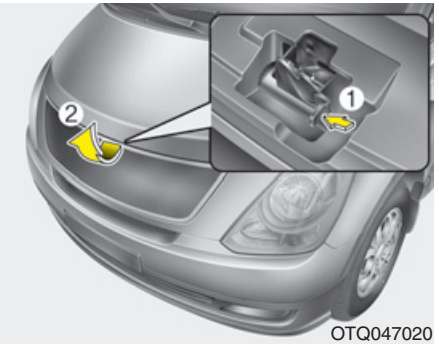

2. Go to the front of the vehicle, raise the hood slightly, pull the secondary latch (1) inside of the hood center and lift the hood (2).

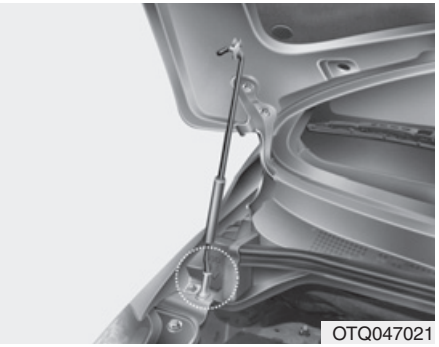

3. Pull the support rod from the hood.
4. Hold the hood open with the support rod.

⚠ WARNING - Hot parts

Grasp the support rod in the area wrapped in rubber. The rubber will help prevent you from being burned by hot metal when the engine is hot.

D090200AUN

Closing the hood

1. Before closing the hood, check the following:
   - All filler caps in engine compartment must be correctly installed.
   - Gloves, rags or any other combustible material must be removed from the engine compartment.
2. Return the support rod to its clip to prevent it from rattling.
3. Lower the hood until it is about 30 cm (1 ft.) above the closed position and let it drop. Make sure that it locks into place.

⚠ WARNING - Hood

- **Before closing the hood, ensure that all obstructions are removed from the hood opening. Closing the hood with an obstruction present in the hood opening may result in property damage or severe personal injury.**
- **Do not leave gloves, rags or any other combustible material in the engine compartment. Doing so may cause a heat-induced fire.**

⚠ WARNING

- **Always double check to be sure that the hood is firmly latched before driving away. If it is not latched, the hood could fly open while the vehicle is being driven, causing a total loss of visibility, which might result in an accident.**
- **The support rod must be inserted completely into the hole provided in the hood whenever you inspect the engine compartment. This will prevent the hood from falling and possibly injuring you.**
- **Do not move the vehicle with the hood in the raised position, as vision is obstructed and the hood could fall or be damaged.**

FUEL FILLER LID

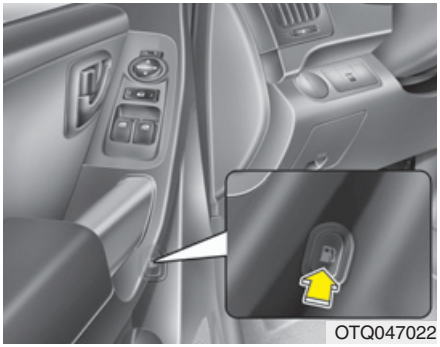
OTQ047022

D100100AUN

Opening the fuel filler lid

The fuel filler lid must be opened from inside the vehicle by pushing the fuel filler lid opener button located on the driver's door.

✻ NOTICE

If the fuel filler lid will not open because ice has formed around it, tap lightly or push on the lid to break the ice and release the lid. Do not pry on the lid. If necessary, spray around the lid with an approved de-icer fluid (do not use radiator anti-freeze) or move the vehicle to a warm place and allow the ice to melt.

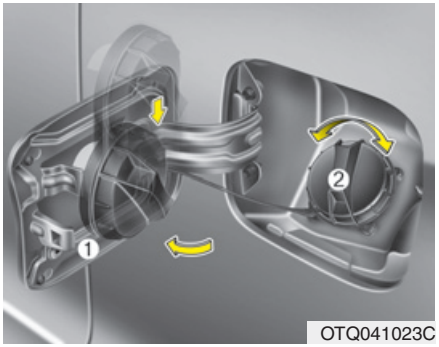

OTQ041023C

1. Stop the engine.
2. To open the fuel filler lid, push the fuel filler lid opener button.
3. Pull the fuel filler lid (1) out to fully open.
4. To remove the cap, turn the fuel tank cap (2) counterclockwise.
5. Refuel as needed.

D100101ATQ

⚠ CAUTION

The left sliding door cannot be opened when the fuel filler lid is open. However, if the fuel filler lid is opened after the door is opened slightly, the left sliding door can be slide rearward. Close the left sliding door to prevent possible damage to the door or the fuel filler lid.

D100200AEN

Closing the fuel filler lid

1. To install the cap, turn it clockwise until it “clicks”. This indicates that the cap is securely tightened.
2. Close the fuel filler lid and push it lightly and make sure that it is securely closed.

D100300BEN

⚠ WARNING - Refueling

- **If pressurized fuel sprays out, it can cover your clothes or skin and thus subject you to the risk of fire and burns. Always remove the fuel cap carefully and slowly. If the cap is venting fuel or if you hear a hissing sound, wait until the condition stops before completely removing the cap.**
- **Do not "top off" after the nozzle automatically shuts off when refueling.**
- **Always check that the fuel cap is installed securely to prevent fuel spillage in the event of an accident.**

⚠ WARNING - Refueling dangers

Automotive fuels are flammable materials. When refueling, please note the following guidelines carefully. Failure to follow these guidelines may result in severe personal injury, severe burns or death by fire or explosion.

- **Read and follow all warning at the gas station facility.**
- **Before refueling note the location of the Emergency Gasoline Shut-Off, if available, at the gas station facility.**
- **Before touching the fuel nozzle, you should eliminate potentially dangerous static electricity discharge by touching another metal part of the vehicle, a safe distance away from the fuel filler neck, nozzle, or other gas source.**

(Continued)

(Continued)

- **Do not get back into a vehicle once you have begun refueling since you can generate static electricity by touching, rubbing or sliding against any item or fabric (polyester, satin, nylon, etc.) capable of producing static electricity. Static electricity discharge can ignite fuel vapors resulting in rapid burning. If you must re-enter the vehicle, you should once again eliminate potentially dangerous static electricity discharge by touching a metal part of the vehicle, away from the fuel filler neck, nozzle or other gasoline source.**
- **When using an approved portable fuel container, be sure to place the container on the ground prior to refueling. Static electricity discharge from the container can ignite fuel vapors causing a fire. Once refueling has begun, contact with the vehicle should be maintained until the filling is complete.**

(Continued)

(Continued)

Use only approved portable plastic fuel containers designed to carry and store gasoline.

- **Do not use cellular phones while refueling. Electric current and/or electronic interference from cellular phones can potentially ignite fuel vapors causing a fire.**
- **When refueling, always shut the engine off. Sparks produced by electrical components related to the engine can ignite fuel vapors causing a fire. Once refueling is complete, check to make sure the filler cap and filler door are securely closed, before starting the engine.**
- **DO NOT use matches or a lighter and DO NOT SMOKE or leave a lit cigarette in your vehicle while at a gas station especially during refueling. Automotive fuel is highly flammable and can, when ignited, result in fire.**
- **If a fire breaks out during refueling, leave the vicinity of the vehicle, and immediately contact the manager of the gas station and then contact the local fire department. Follow any safety instructions they provide.**

⚠ CAUTION

- ***Make sure to refuel your vehicle according to the "Fuel requirements" suggested in section 1.***
- ***If the fuel filler cap requires replacement, use only a genuine HYUNDAI cap or the equivalent specified for your vehicle. An incorrect fuel filler cap can result in a serious malfunction of the fuel system or emission control system.***
- ***Do not spill fuel on the exterior surfaces of the vehicle. Any type of fuel spilled on painted surfaces may damage the paint.***
- ***After refueling, make sure the fuel cap is installed securely to prevent fuel spillage in the event of an accident.***

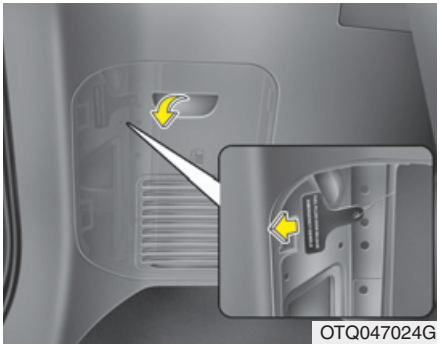

D100500AUN

Emergency fuel filer lid release

If the fuel filler lid does not open using the remote fuel filler lid release, you can open it manually. Unsnap and remove the panel in the cargo area. Pull the handle outward slightly.

⚠ CAUTION

Do not pull the handle excessively, otherwise the luggage area trim or release handle may be damaged.

STEERING WHEEL

D130100AEN

Power steering

Power steering uses energy from the engine to assist you in steering the vehicle. If the engine is off or if the power steering system becomes inoperative, the vehicle may still be steered, but it will require increased steering effort.

Should you notice any change in the effort required to steer during normal vehicle operation, have the power steering checked by an authorized HYUNDAI dealer.

⚠ CAUTION

Never hold the steering wheel against a stop (extreme right or left turn) for more than 5 seconds with the engine running. Holding the steering wheel for more than 5 seconds in either position may cause damage to the power steering pump.

✻ NOTICE

If the power steering drive belt breaks or if the power steering pump malfunctions, the steering effort will greatly increase.

✻ NOTICE

If the vehicle is parked for extended periods outside in cold weather (below -10°C/14°F), the power steering may require increased effort when the engine is first started. This is caused by increased fluid viscosity due to the cold weather and does not indicate a malfunction.

When this happens, increase the engine RPM by depressing accelerator until the RPM reaches 1,500 rpm then release or let the engine idle for two or three minutes to warm up the fluid.

D130300AUN

Tilt steering (if equipped)

Tilt steering allows you to adjust the steering wheel before you drive. You can also raise it to give your legs more room when you exit and enter the vehicle.

The steering wheel should be positioned so that it is comfortable for you to drive, while permitting you to see the instrument panel warning lights and gauges.

⚠ WARNING

- **Never adjust the angle of the steering wheel while driving. You may lose steering control and cause severe personal injury, death or accidents.**
- **After adjusting, push the steering wheel both up and down to be certain it is locked in position.**

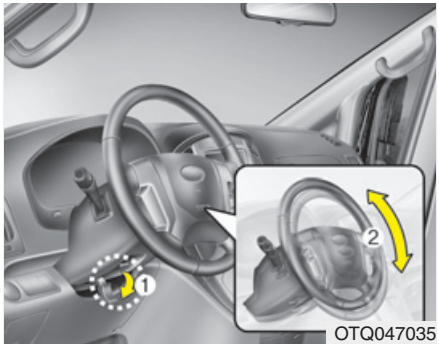

OTQ047035

To change the steering wheel angle, pull down the lock-release lever (1), adjust the steering wheel to the desired angle (2), then pull up the lock-release lever to lock the steering wheel in place. Be sure to adjust the steering wheel to the desired position before driving.

OTQ047036

D130500AUN

Horn

To sound the horn, press the horn symbol on your steering wheel.

Check the horn regularly to be sure it operates properly.

✻ NOTICE

To sound the horn, press the area indicated by the horn symbol on your steering wheel (see illustration). The horn will operate only when this area is pressed.

⚠ CAUTION

Do not strike the horn severely to operate it, or hit it with your fist. Do not press on the horn with a sharp-pointed object.

MIRRORS

D140100BUN

Inside rearview mirror

Adjust the rearview mirror to center on the view through the rear window. Make this adjustment before you start driving.

⚠ WARNING - Rear visibility

Do not place objects in the rear seat or cargo area which would interfere with your vision through the rear window.

⚠ WARNING

Do not modify the inside mirror and do not install a wide mirror. It could result in injury, during an accident or deployment of the air bag.

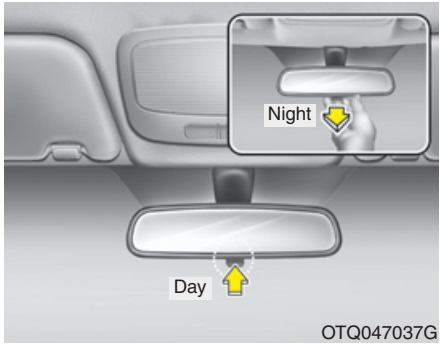

D140101AUN

Day/night rearview mirror (if equipped)

Make this adjustment before you start driving and while the day/night lever is in the day position.

Pull the day/night lever toward you to reduce glare from the headlights of vehicles behind you during night driving.

Remember that you lose some rearview clarity in the night position.

D140102AUN

Electric chromic mirror (ECM) (if equipped)

The electric rearview mirror automatically controls the glare from the headlights of the car behind you in nighttime or low light driving conditions. The sensor mounted in the mirror senses the light level around the vehicle, and automatically controls the headlight glare from vehicles behind you.

When the engine is running, the glare is automatically controlled by the sensor mounted in the rearview mirror.

Whenever the shift lever is shifted into reverse (R), the mirror will automatically go to the brightest setting in order to improve the drivers view behind the vehicle.

⚠ CAUTION

When cleaning the mirror, use a paper towel or similar material dampened with glass cleaner. Do not spray glass cleaner directly on the mirror as that may cause the liquid cleaner to enter the mirror housing.

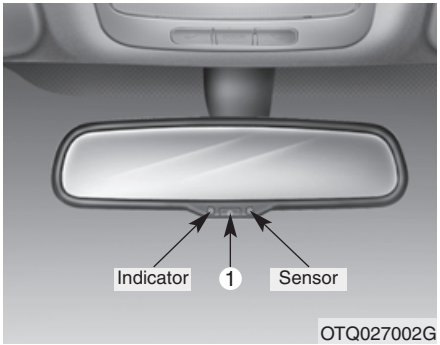

To operate the electric rearview mirror:

- Press the ON/OFF button (1) to turn the automatic dimming function on. The mirror indicator light will illuminate.

  Press the ON/OFF button to turn the automatic dimming function off. The mirror indicator light will turn off.
- The mirror defaults to the ON position whenever the ignition switch is turned on.

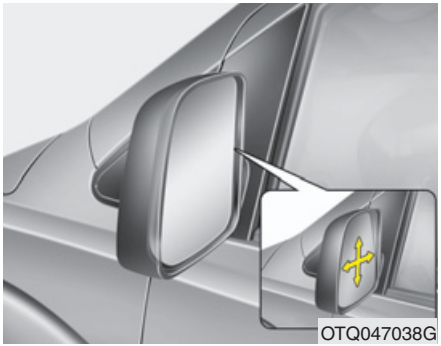

D140200AUN

Outside rearview mirror

Be sure to adjust mirror angles before driving.

Your vehicle is equipped with both left-hand and right-hand outside rearview mirrors. The mirrors can be adjusted remotely with the remote switch. (if equipped) The mirror heads can be folded back to prevent damage during an automatic car wash or when passing in a narrow street.

⚠ WARNING - Rearview mirrors

- **The right outside rearview mirror is convex. In some countries, the left outside rearview mirror is also convex. Objects seen in the mirror are closer than they appear.**
- **Use your interior rearview mirror or direct observation to determine the actual distance of following vehicles when changing lanes.**

⚠ CAUTION

Do not scrape ice off the mirror face; this may damage the surface of the glass. If ice should restrict movement of the mirror, do not force the mirror for adjustment. To remove ice, use a deicer spray, or a sponge or soft cloth with very warm water.

⚠ CAUTION

If the mirror is jammed with ice, do not adjust the mirror by force. Use an approved spray de-icer (not radiator antifreeze) to release the frozen mechanism or move the vehicle to a warm place and allow the ice to melt.

⚠ WARNING

Do not adjust or fold the outside rearview mirrors while the vehicle is moving. This could result in loss of control, and an accident which could cause death, serious injury or property damage.

OTQ047042

D140201AEN

Remote control (if equipped)

The electric remote control mirror switch allows you to adjust the position of the left and right outside rearview mirrors. To adjust the position of either mirror, push the switch (1) to R or L to select the right side mirror or the left side mirror, then press a corresponding point on the mirror adjustment control to position the selected mirror up, down, left or right.

After adjustment, put the switch into neutral (center) position to prevent the inadvertent adjustment.

⚠ CAUTION

- ***The mirrors stop moving when they reach the maximum adjusting angles, but the motor continues to operate while the switch is depressed. Do not depress the switch longer than necessary, the motor may be damaged.***
- ***Do not attempt to adjust the outside rearview mirror by hand. Doing so may damage the parts.***

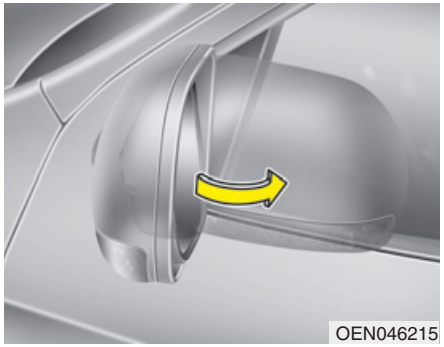

D140202ATQ

Folding the outside rearview mirror

Manual type

To fold the outside rearview mirror, grasp the housing of the mirror and then fold it toward the rear of the vehicle.

Electric Type (if equipped)

To fold the outside rearview mirror, depress the button.

To unfold it, depress the button again.

⚠ CAUTION

- ***To prevent unnecessary battery discharge, do not adjust the mirrors longer than necessary while the engine is not running.***
- ***In case of the electric type of outside rearview mirror, don't fold it by hand. It could cause the failure of the motor.***

INSTRUMENT CLUSTER

■ Type A

■ Type B

1. Tachometer*
2. Turn signal indicators
3. Speedometer
4. Engine temperature gauge
5. Warning and indicator lights
6. Shift position indicator*
7. Odometer/Tripmeter
8. Fuel gauge

* : if equipped

❊ The actual cluster in the vehicle may differ from the illustration.

OTQ041004L/OTQ041004F

D150000BTQ

Left-Hand drive type

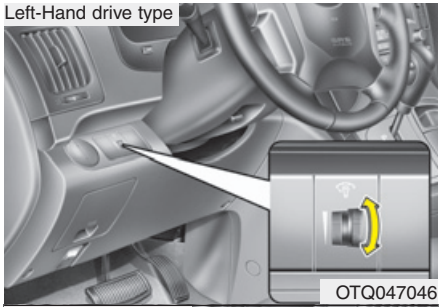

Right-Hand drive type

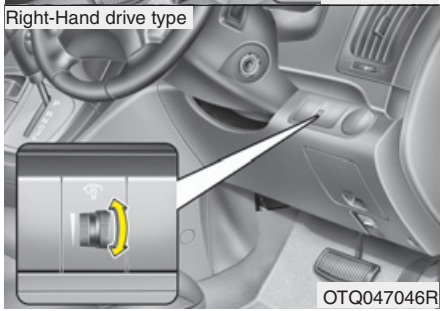

D150100AEN-EE

Instrument panel illumination (if equipped)

When the vehicle's parking lights or headlights are on, rotate the illumination control knob to adjust the instrument panel illumination intensity.

Gauges

D150201AUN

Speedometer

The speedometer indicates the forward speed of the vehicle.

The speedometer is calibrated in miles per hour and/or kilometers per hour.

D150202AUN

Tachometer (if equipped)

The tachometer indicates the approximate number of engine revolutions per minute (rpm).

Use the tachometer to select the correct shift points and to prevent lugging and/or over-revving the engine.

When the door is open, or if the engine is not started within 1 minute, the tachometer pointer may move slightly in ON position with the engine OFF. This movement is normal and will not affect the accuracy of the tachometer once the engine is running.

⚠ CAUTION

Do not operate the engine within the tachometer's RED ZONE.

This may cause severe engine damage.

D150203AUN

Engine temperature gauge

This gauge shows the temperature of the engine coolant when the ignition switch is ON.

Do not continue driving with an overheated engine. If your vehicle overheats, refer to "If the engine overheats" in section 6.

⚠ CAUTION

If the gauge pointer moves beyond the normal range area toward the "H" or "130" position, it indicates overheating that may damage the engine.

⚠ WARNING

Never remove the radiator cap when the engine is hot. The engine coolant is under pressure and could cause severe burns. Wait until the engine is cool before adding coolant to the reservoir.

D150204BUN

Fuel gauge

The fuel gauge indicates the approximate amount of fuel remaining in the fuel tank. The fuel tank capacity is given in section 9. The fuel gauge is supplemented by a low fuel warning light, which will illuminate when the fuel tank is near empty.

On inclines or curves, the fuel gauge pointer may fluctuate or the low fuel warning light may come on earlier than usual due to the movement of fuel in the tank.

⚠ WARNING - Fuel gauge

Running out of fuel can expose vehicle occupants to danger.

You must stop and obtain additional fuel as soon as possible after the warning light comes on or when the gauge indicator comes close to the "E" or "0" level.

⚠ CAUTION

Avoid driving with a very low fuel level. If you run out of fuel, it could cause the engine to misfire and result in excessive loading of the catalytic converter.

OTQ047048

D150205AUN

Odometer/Tripmeter (if equipped)

Odometer (km or mi)

The odometer indicates the total distance the vehicle has been driven.

You will also find the odometer useful to determine when periodic maintenance should be performed.

✻ NOTICE

It is forbidden that alteration of the odometer of any vehicle with the intent to change the mileage registered on the odometer. The alteration may void your warranty coverage.

OTQ047049

Tripmeter (km or mi)

TRIP A: Tripmeter A

TRIP B: Tripmeter B

The tripmeter indicates the distance of individual trips selected by the driver.

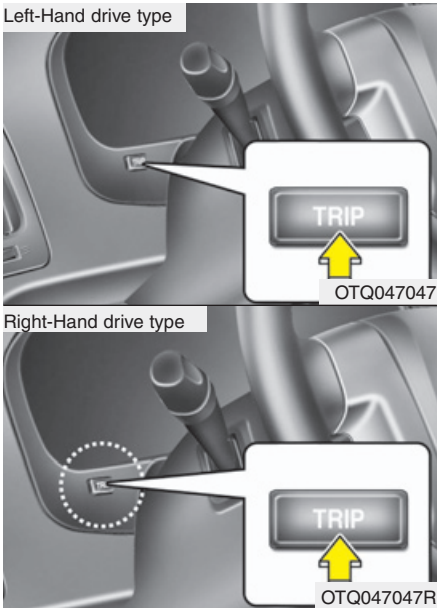

Tripmeter A or B can be selected by pressing the TRIP button for less than 1 second.

Tripmeter A or B can be reset to 0.0 by pressing the TRIP button for 1 second or more, and then releasing.

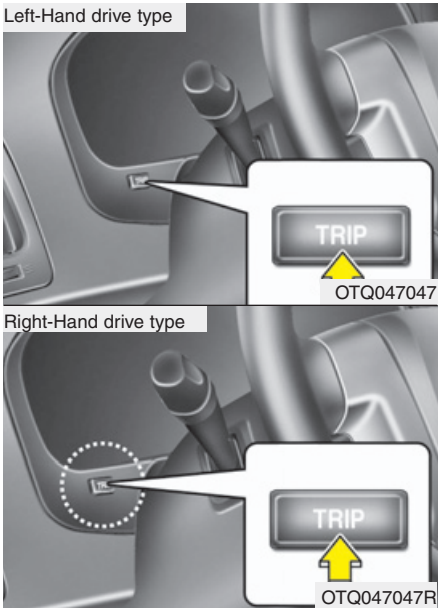

D150206ATQ

Trip computer (if equipped)

The trip computer is a microcomputer-controlled driver information system that displays information related to driving, including distance to empty, tripmeter and average speed on the display when the ignition switch is in the ON position.

All stored driving information (except odometer) is reset if the battery is disconnected. The odometer is always displayed until the display is turned off.

Push the TRIP button for less than 1 second to select distance to empty, average speed or tripmeter function as follows :

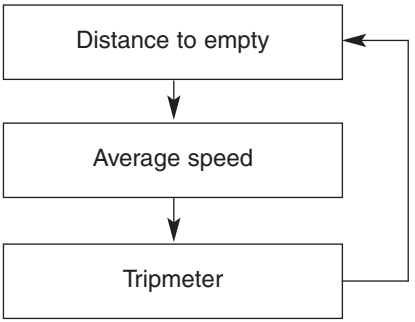

Distance to empty (km or miles)

This mode indicates the estimated distance to empty based on the current fuel in the fuel tank and the amount of fuel delivered to the engine. When the remaining distance is below 50 km (30 miles), "---" will be displayed and the distance to empty indicator will blink.

The meter's working range is from 50 to 999 km (30 to 999 miles).

✻ NOTICE

- **If the vehicle is not on level ground or the battery power has been interrupted, the "Distance to empty" function may not operate correctly.**
  The trip computer may not register additional fuel if less than 6 liters (1.6 gallons) of fuel are added to the vehicle.
- **The fuel consumption and distance to empty values may vary significantly based on driving conditions, driving habits, and condition of the vehicle.**
- **The distance to empty value is an estimate of the available driving distance. This value may differ from the actual driving distance available.**

Average speed (km/h or mph)

This mode calculates the average speed of the vehicle since the last average speed reset.

Even if the vehicle is not in motion, the average speed keeps going while the engine is running.

The meter's working range is from 0 to 220 km/h (0 to 140 mph).

Pressing the TRIP button for more than 1 second, when the average speed is being displayed, clears the average speed to zero (---).

OTQ047051

Tripmeter (km or miles)

This mode indicates the distance of individual trip since the last tripmeter reset.

The meter's working range is from 0.0 to 999.9 km (miles).

Pressing the TRIP button for more than 1 second when the tripmeter is being displayed clears the tripmeter to zero (0.0).

D150300AEN

Warnings and indicators

All warning lights are checked by turning the ignition switch ON (do not start the engine). Any light that does not illuminate should be checked by an authorized HYUNDAI dealer.

After starting the engine, check to make sure that all warning lights are off. If any are still on, this indicates a situation that needs attention. When releasing the parking brake, the brake system warning light should go off. The fuel warning light will stay on if the fuel level is low.

D150302AEN

Air bag warning light (if equipped)

This warning light will illuminate for approximately 6 seconds each time you turn the ignition switch to the ON position. This light also comes on when the Supplemental Restraint System (SRS) is not working properly. If the AIR BAG warning light does not come on, or continuously remains on after operating for about 6 seconds when you turned the ignition switch to the ON position or started the engine, or if it comes on while driving, have the SRS inspected by an authorized HYUNDAI dealer.

D150303AEN

Anti-lock brake system (ABS) warning light (if equipped)

This light illuminates if the ignition switch is turned ON and goes off in approximately 3 seconds if the system is operating normally.

If the ABS warning light remains on, comes on while driving, or does not come on when the ignition switch is turned to the ON position, this indicates that there may be a malfunction with the ABS.

If this occurs, have your vehicle checked by an authorized HYUNDAI dealer as soon as possible. The normal braking system will still be operational, but without the assistance of the anti-lock brake system.

Electronic brake force distribution (EBD) system warning light

If two warning lights illuminate at the same time while driving, your vehicle may have a malfunction with the ABS and EBD system.

In this case, your ABS and regular brake system may not work normally. Have the vehicle checked by an authorized HYUNDAI dealer as soon as possible.

⚠ WARNING

If the both ABS and brake warning lights are on and stay on, your vehicle's brake system will not work normally during sudden braking. In this case, avoid high speed driving and abrupt braking. Have your vehicle checked by an authorized HYUNDAI dealer as soon as possible.

D150304AEN-EE

Seat belt warning

Seat belt warning light (if equipped)

As a reminder to the driver, the seat belt warning light will blink for approximately 6 seconds each time you turn the ignition switch ON regardless of belt fastening.

If the driver's seat belt is unfastened after the ignition switch is ON, the seat belt warning light blinks again for approximately 6 seconds.

Seat belt warning chime (if equipped)

If the driver's seat belt is not fastened when the ignition switch is turned ON or if it is unfastened after the ignition switch is ON, the seat belt warning chime will sound for approximately 6 seconds. At this time, if the seat belt is fastened, the chime will stop at once.

D150305AUN

Turn signal indicator

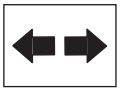

The blinking green arrows on the instrument panel show the direction indicated by the turn signals. If the arrow comes on but does not blink, blinks more rapidly than normal, or does not illuminate at all, a malfunction in the turn signal system is indicated. Your dealer should be consulted for repairs.

D150306AUN

High beam indicator

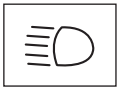

This indicator illuminates when the headlights are on and in the high beam position or when the turn signal lever is pulled into the Flash-to-Pass position.

D150307AEN

Engine oil pressure warning light

This warning light indicates the engine oil pressure is low.

If the warning light illuminates while driving:

1. Drive safely to the side of the road and stop.
2. With the engine off, check the engine oil level. If the level is low, add oil as required.

If the warning light remains on after adding oil or if oil is not available, call an authorized HYUNDAI dealer.

⚠ CAUTION

If the engine is not stopped immediately after the engine oil pressure warning light is illuminated, severe damage could result.

⚠ CAUTION

If the oil pressure warning light stays on while the engine is running, serious engine damage may result. The oil pressure warning light comes on whenever there is insufficient oil pressure. In normal operation, it should come on when the ignition switch is turned on, then go out when the engine is started. If the oil pressure warning light stays on while the engine is running, there is a serious malfunction.

If this happens, stop the car as soon as it is safe to do so, turn off the engine and check the oil level. If the oil level is low, fill the engine oil to the proper level and start the engine again. If the light stays on with the engine running, turn the engine off immediately. In any instance where the oil light stays on when the engine is running, the engine should be checked by an authorized HYUNDAI dealer before the car is driven again.

Engine oil level warning light (Diesel engine, if equipped)

When the engine oil is not enough, the engine oil level warning light may be illuminated. If the warning light comes on, check the engine oil level as soon as possible and add engine oil as required. Slowly pour the recommended the oil little by little into a funnel. (Oil refill capacity: approximately 0.6 ~ 1.0 L)

Use only the specified engine oil. (Refer to "Recommended lubricants and capacities" in section 9.) Do not overfill the engine oil to ensure the oil level is not above F mark on the dipstick.

✻ NOTICE

- **Cycle the ignition from OFF to ON 3 times within 5 seconds, the warning light will go off immediately. However, when you turn off the warning light without adding the engine oil, the light may come on again.**
- **If you drive the vehicle after adding the engine oil, the warning light will go off within 1hour.**

⚠ CAUTION

- ***If the light comes on continuously after adding the engine oil and driving the vehicle for 1 hour, take your vehicle to your nearest authorized HYUNDAI dealer and have the system checked.***
- ***Even if this light does not come on after the engine has started, the engine oil should be checked and supplied periodically.***

D150308AEN

Parking brake & brake fluid warning light

Parking brake warning

This light is illuminated when the parking brake is applied with the ignition switch in the START or ON position. The warning light should go off when the parking brake is released while engine is running.

The parking brake warning chime will sound to remind you that the parking brake is applied when you are driving above 10 km/h (6 mph). Always release the parking brake before you drive.

Low brake fluid level warning

If the warning light remains on, it may indicate that the brake fluid level in the reservoir is low.

If the warning light remains on:

1. Drive carefully to the nearest safe location and stop your vehicle.
2. With the engine stopped, check the brake fluid level immediately and add fluid as required. Then check all brake components for fluid leaks.
3. Do not drive the vehicle if leaks are found, the warning light remains on or the brakes do not operate properly. Have the vehicle towed to any authorized HYUNDAI dealer for a brake system inspection and necessary repairs.

Your vehicle is equipped with dual-diagonal braking systems. This means you still have braking on two wheels even if one of the dual systems should fail. With only one of the dual systems working, more than normal pedal travel and greater pedal pressure are required to stop the car. Also, the car will not stop in as short a distance with only a portion of the brake system working. If the brakes fail while you are driving, shift to a lower gear for additional engine braking and stop the car as soon as it is safe to do so.

To check bulb operation, check whether the parking brake and brake fluid warning light illuminates when the ignition switch is in the ON position.

⚠ WARNING

Driving the vehicle with a warning light on is dangerous. If the brake warning light remains on, have the brakes checked and repaired immediately by an authorized HYUNDAI dealer.

Low brake vacuum pressure warning (diesel engine only, if equipped)

If the warning light remains on, it may indicate that the brake vacuum pump has any problem. Therefore you should avoid high speed driving or sudden stop, and you should depress the brake pedal deeper and harder than usual in braking. Make sure to have the brake system checked and repaired by an authorized HYUNDAI dealer.

⚠ WARNING

- **Continuous braking while driving on steep or long downhill may cause to descend the vacuum level in brake booster for a time and turn on the warning light. In this case, shift down the transmission. If the warning light illuminate continuously, stop the vehicle in the safe location and wait until the warning light goes off.**
- **Driving the vehicle with a warning light on is dangerous. If the brake warning light remains on, have the brakes checked and repaired immediately by an authorized HYUNDAI dealer.**

D150312AUN

Shift pattern indicator (if equipped)

The indicator displays to show the automatic transmission shift lever selection.

Manual transmission shift indicator (if equipped)

This indicator informs you which gear is desired while driving to save fuel.

For example

▲3: Indicates that shifting up to the 3rd gear is desired (currently the shift lever is in the 2nd gear).

▼3: Indicates that shifting down to the 3rd gear is desired (currently the shift lever is in the 4th gear).

✻ NOTICE

When the system is not working properly, up/down arrow indicator and gear is not displayed.

D150339ASA

O/D OFF Indicator (if equipped)

This indicator comes on when the O/D system is deactivated.

D150313AEN

Charging system warning light

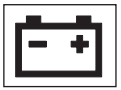

This warning light indicates a malfunction of either the generator or electrical charging system.

If the warning light comes on while the vehicle is in motion:

1. Drive to the nearest safe location.
2. With the engine off, check the generator drive belt for looseness or breakage.
3. If the belt is adjusted properly, a problem exists somewhere in the electrical charging system. Have an authorized HYUNDAI dealer correct the problem as soon as possible.

D150315AUN

Tailgate open warning light

This warning light blinks when the tailgate is not closed securely with the ignition in any position.

D150316AUN

Door ajar warning light

This warning light illuminates when a door is not closed securely with the ignition in any position.

D150317AFD

Immobilizer indicator (if equipped)

This light illuminates when the immobilizer key is inserted and turned to the ON position to start the engine.

At this time, you can start the engine. The light goes out after the engine is running.

If this light blinks when the ignition switch is in the ON position before starting the engine, have the system checked by an authorized HYUNDAI dealer.

D150318ATQ

Low fuel level warning light

This warning light indicates the fuel tank is nearly empty. When it comes on, you should add fuel as soon as possible. Driving with the fuel level warning light on or with the fuel level below “E” or “0” can cause the engine to misfire and damage the catalytic converter.

D150320ATQ

Malfunction indicator (MIL) (check engine light) (if equipped)

This indicator light is part of the Engine Control System which monitors various emission control system components. If this light illuminates while driving, it indicates that a potential malfunction has been detected somewhere in the emission control system.

This light will also illuminate when the ignition switch is turned to the ON position, and will go out in a few seconds after the engine is started. If it illuminates while driving, or does not illuminate when the ignition switch is turned to the ON position, take your vehicle to your nearest authorized HYUNDAI dealer and have the system checked.

Generally, your vehicle will continue to be drivable, but have the system checked by an authorized HYUNDAI dealer promptly.

⚠ CAUTION

Prolonged driving with the Emission Control System Malfunction Indicator Light illuminated may cause damage to the emission control systems which could effect drivability and/or fuel economy.

⚠ CAUTION - Gasoline engine

If the Emission Control System Malfunction Indicator Light illuminates, potential catalytic converter damage is possible which could result in loss of engine power. Have the Engine Control System inspected as soon as possible by an authorized HYUNDAI dealer.

⚠ CAUTION - Diesel engine (if equipped with DPF)

When the malfunction indicator light is blinks, it may stop blinking after driving the vehicle at more than 60km/h (37 mph) or at more than second gear with 1500 ~ 2000 engine rpm for a certain time (for about 25 minutes).

If the malfunction indicator light continues to be blinked in spite of the procedure, please visit an authorized HYUNDAI dealer and then check the DPF system.

If you continue to drive with the malfunction indicator light blinking for a long time, the DPF system can be damaged and fuel consumption can be worsen.

⚠ CAUTION - Diesel engine

If the Emission Control System Malfunction Indicator Light blinks, some error related to the injection quantity adjustment occurs which could result in loss of engine power, combustion noise and poor emission. Have the Engine Control System inspected as soon as possible by an authorized HYUNDAI dealer.

D150323ATQ-EE

ESP indicator (Electronic Stability Program) (if equipped)

ESP

The ESP indicator will illuminate when the ignition switch is turned ON, but should go off after approximately 3 seconds. When the ESP is on, it monitors the driving conditions. Under normal driving conditions, the ESP indicator will remain off. When a slippery or low traction condition is encountered, the ESP will operate, and the ESP indicator will blink to indicate the ESP is operating.
But, if the ESP system malfunctions the indicator illuminates and stays on. Take your vehicle to an authorized HYUNDAI dealer and have the system checked.

✻ NOTICE

After reconnecting or recharging a discharged battery, the ESP indicator may illuminate. In this case, turn the steering wheel half way to the left and right while the ignition switch is in the ON position. Then, restart the engine after the ignition is off. If the ESP indicator does not turn off, have the system checked by an authorized HYUNDAI dealer as soon as possible.

D150324ATQ

ESP OFF indicator (if equipped)

ESP OFF

The ESP OFF indicator will illuminate when the ignition switch is turned ON, but should go off after approximately 3 seconds. To switch to ESP OFF mode, press the ESP OFF button. The ESP OFF indicator will illuminate indicating the ESP is deactivated.

D150328AEN

Glow indicator (Diesel engine)

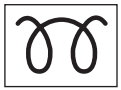

The indicator light illuminates when the ignition switch is placed at the ON position. The engine can be started after the preheat indicator light goes off. The illuminating time varies with the water temperature, air temperature and battery condition.

✻ NOTICE

If the engine was not started within 10 seconds after the preheating is completed, turn the ignition switch once more to the LOCK position during 10 seconds, and then to the ON position, in order to preheat again.

⚠ CAUTION

If the preheat indicator light continues to illuminate or flash on and off after the engine has warmed up or while driving, check the system by an authorized HYUNDAI dealer as soon as possible.

D150329AEN

Fuel filter warning light (Diesel engine)

This warning light illuminates for 3 seconds after the ignition switch is set to the ON position and then it will go out. If it lights up while the engine is running, it indicates that water has accumulated inside the fuel filter. If this happens, remove the water from the fuel filter. For more information, refer to “Fuel filter” in section 7.

⚠ CAUTION

When the fuel filter warning light is illuminated, engine power (vehicle speed & idle speed) may decrease. If you keep driving with the warning light on, you can damage your vehicle's engine parts and injection system of the Common Rail. If this occurs, have your vehicle checked by an authorized HYUNDAI dealer as soon as possible.

D150330AEN

Overspeed warning (if equipped)

Overspeed warning light

If you drive with the speed of 120 km/h or more, the overspeed warning light will blink. This is to prevent you from driving your vehicle with overspeed.

Overspeed warning chime

If you drive with the speed of 120 km/h or more, the overspeed warning chime will sound for about 5 seconds. This is to prevent you from driving your vehicle with overspeed.

D150327AUN

Key reminder warning chime (if equipped)

If the driver's door is opened while the ignition key is left in the ignition switch (ACC or LOCK position), the key reminder warning chime will sound. This is to prevent you from locking your keys in the vehicle. The chime sounds until the key is removed from the ignition switch or the driver's door is closed.

REAR PARKING ASSIST SYSTEM (IF EQUIPPED)

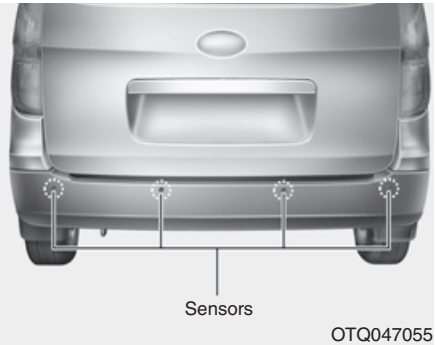

D170000AEN

The rear parking assist system assists the driver during backward movement of the vehicle by chiming if any object is sensed within a distance of 120 cm (47 in.) behind the vehicle. This system is a supplemental system and it is not intended to nor does it replace the need for extreme care and attention of the driver. The sensing range and objects detectable by the back sensors are limited. Whenever backing-up, pay as much attention to what is behind you as you would in a vehicle without a rear parking assist system.

⚠ WARNING

The rear parking assist system is a supplementary function only. The operation of the rear parking assist system can be affected by several factors (including environmental conditions). It is the responsibility of the driver to always check the area behind the vehicle before and while backing up.

Operation of the rear parking assist system

D170101AEN

Operating condition

- This system will activate when backing up with the ignition switch ON.

  If the vehicle is moving at a speed over 5 km/h (3 mph), the system may not be activated correctly.
- The sensing distance while the rear parking assist system is in operation is approximately 120 cm (47 in.).
- When more than two objects are sensed at the same time, the closest one will be recognized first.

D170102AUN

Types of warning sound

- When an object is 120 cm to 81 cm (47 in. to 32 in.) from the rear bumper: Buzzer beeps intermittently.
- When an object is 80 cm to 41 cm (31 in. to 16 in.) from the rear bumper: Buzzer beeps more frequently.
- When an object is within 40 cm (15 in.) of the rear bumper:

  Buzzer sounds continuously.

D170200AEN

Non-operational conditions of rear parking assist system

The rear parking assist system may not operate properly when:

1. Moisture is frozen to the sensor. (It will operate normally when the moisture has been cleared.)
2. The sensor is covered with foreign matter, such as snow or water, or the sensor cover is blocked. (It will operate normally when the material is removed or the sensor is no longer blocked.)
3. Driving on uneven road surfaces (unpaved roads, gravel, bumps, gradient).
4. Objects generating excessive noise (vehicle horns, loud motorcycle engines, or truck air brakes) are within range of the sensor.
5. Heavy rain or water spray exists.
6. Wireless transmitters or mobile phones are within range of the sensor.
7. The sensor is covered with snow.
8. Trailer towing

The detecting range may decrease when:

1. The sensor is stained with foreign matter such as snow or water. (The sensing range will return to normal when removed.)
2. Outside air temperature is extremely hot or cold.

The following objects may not be recognized by the sensor:

1. Sharp or slim objects such as ropes, chains or small poles.
2. Objects which tend to absorb the sensor frequency such as clothes, spongy material or snow.
3. Undetectable objects smaller than 1 m (40 in.) in height and narrower than 14 cm (6 in.) in diameter.

D170300AEN

Rear parking assist system precautions

- The rear parking assist system may not sound sequentially depending on the speed and shapes of the objects detected.
- The rear parking assist system may malfunction if the vehicle bumper height or sensor installation has been modified or damaged. Any non-factory installed equipment or accessories may also interfere with the sensor performance.
- The sensor may not recognize objects less than 40 cm (15 in.) from the sensor, or it may sense an incorrect distance. Use caution.
- When the sensor is frozen or stained with snow, dirt, or water, the sensor may be inoperative until the stains are removed using a soft cloth.
- Do not push, scratch or strike the sensor. Sensor damage could occur.

✻ NOTICE

This system can only sense objects within the range and location of the sensors; It can not detect objects in other areas where sensors are not installed. Also, small or slim objects, such as poles or objects located between sensors may not be detected by the sensors.
Always visually check behind the vehicle when backing up.
Be sure to inform any drivers of the vehicle that may be unfamiliar with the system regarding the systems capabilities and limitations.

⚠ WARNING

Pay close attention when the vehicle is driven close to objects on the road, particularly pedestrians, and especially children. Be aware that some objects may not be detected by the sensors, due to the object's distance, size or material, all of which can limit the effectiveness of the sensor. Always perform a visual inspection to make sure the vehicle is clear of all obstructions before moving the vehicle in any direction.

D170400AEN

Self-diagnosis

If you don't hear an audible warning sound or if the buzzer sounds intermittently when shifting the gear to the R (Reverse) position, this may indicate a malfunction in the rear parking assist system. If this occurs, have your vehicle checked by an authorized HYUNDAI dealer as soon as possible.

⚠ WARNING

Your new vehicle warranty does not cover any accidents or damage to the vehicle or injuries to its occupants due to a rear parking assist system malfunction. Always drive safely and cautiously.

HAZARD WARNING FLASHER

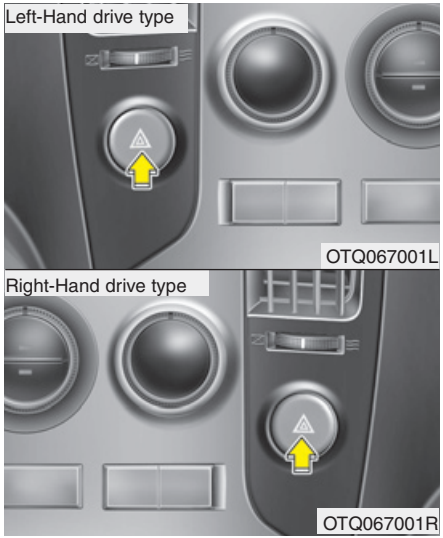

D180000AUN

The hazard warning flasher should be used whenever you find it necessary to stop the car in a hazardous location. When you must make such an emergency stop, always pull off the road as far as possible. The hazard warning lights are turned on by pushing in the hazard switch. This causes all turn signal lights to blink. The hazard warning lights will operate even though the key is not in the ignition switch.

To turn the hazard warning lights off, push the switch a second time.

LIGHTING

D190100CUN

Battery saver function

- The purpose of this feature is to prevent the battery from being discharged. The system automatically turns off the parking lights when the driver removes the ignition key and opens the driver-side door.
- With this feature, the parking lights will be turned off automatically if the driver parks on the side of road at night.

  If necessary, to keep the lights on when the ignition key is removed, perform the following:

  1) Open the driver-side door.
  2) Turn the parking lights OFF and ON again using the light switch on the steering column.

⚠ CAUTION

If the driver gets out of the vehicle through other doors (except driver's door), the battery saver function does not operate. Therefore, it causes the battery to be discharged. In this case, make sure to turn off the lamp before getting out of the vehicle.

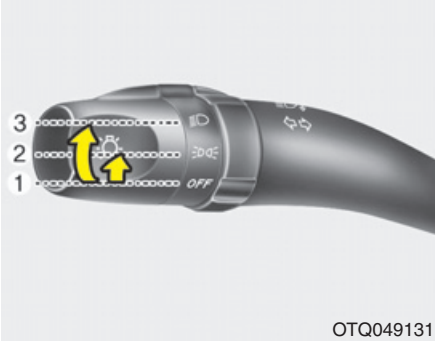

D190400ATQ

Lighting control

The light switch has a Headlight and a Parking light position.

To operate the lights, turn the knob at the end of the control lever to one of the following positions:

(1) OFF position

(2) Parking light position

(3) Headlight position

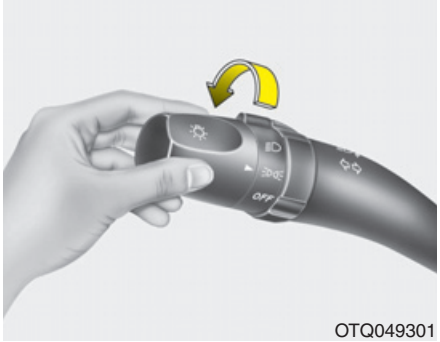

OTQ049301

D190401AEN

Parking light position ( )

When the light switch is in the parking light position (1st position), the tail, license and instrument panel lights are ON.

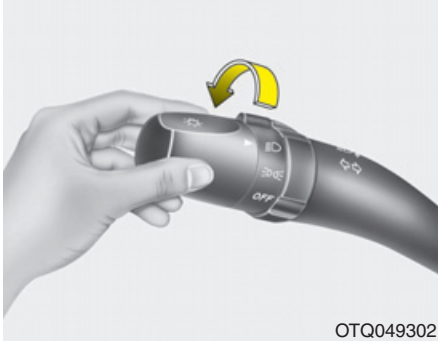

OTQ049302

D190402AEN

Headlight position ( )

When the light switch is in the headlight position (2nd position) the head, tail, license and instrument panel lights are ON.

✻ NOTICE

The ignition switch must be in the ON position to turn on the headlights.

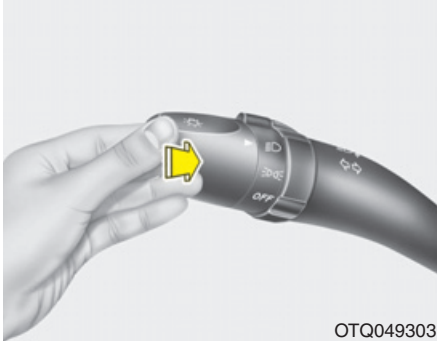

OTQ049303

D190500BUN

High beam operation

To turn on the high beam headlights, push the lever away from you. Pull it back for low beams. The high beam indicator will light when the headlight high beams are switched on. To prevent the battery from being discharged, do not leave the lights on for a prolonged time while the engine is not running.

⚠ WARNING

Do not use high beam when there are other vehicles. Using high beam could obstruct the other driver's vision.

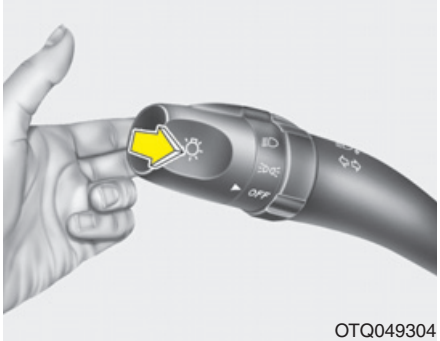

OTQ049304

To flash the headlights, pull the lever towards you. It will return to the normal (low beam) position when released. The headlight switch does not need to be on to use this flashing feature.

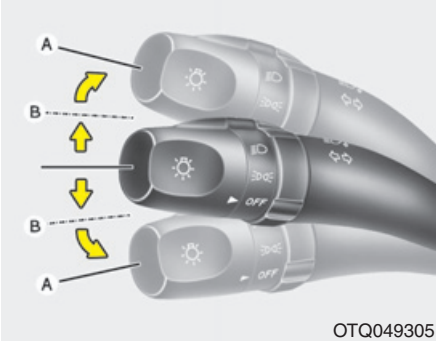

OTQ049305

D190600AUN

Turn signals and lane change signals

The ignition switch must be on for the turn signals to function. To turn on the turn signals, move the lever up or down (A). Green arrow indicators on the instrument panel indicate which turn signal is operating.

They will self-cancel after a turn is completed. If the indicator continues to flash after a turn, manually return the lever to the OFF position.

To signal a lane change, move the turn signal lever slightly and hold it in position (B). The lever will return to the OFF position when released.

If an indicator stays on and does not flash or if it flashes abnormally, one of the turn signal bulbs may be burned out and will require replacement.

✻ NOTICE

If an indicator flash is abnormally quick or slow, a bulb may be burned out or have a poor electrical connection in the circuit.

Left-Hand drive type

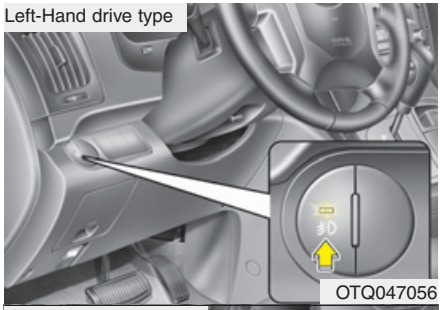

OTQ047056

Right-Hand drive type

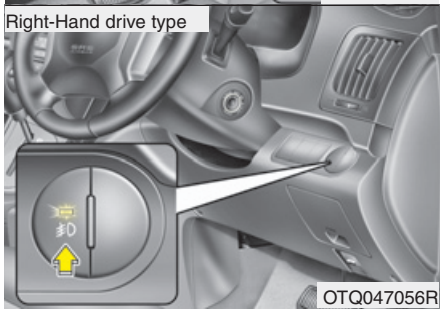

OTQ047056R

D190700AEN

Front fog light (if equipped)

Fog lights are used to provide improved visibility when visibility is poor due to fog, rain or snow, etc. The fog lights will turn on when fog light switch is pressed after the parklight is turned on.

To turn off the fog lights, press the switch again.

⚠ CAUTION

When in operation, the fog lights consume large amounts of vehicle electrical power. Only use the fog lights when visibility is poor.

Left-Hand drive type

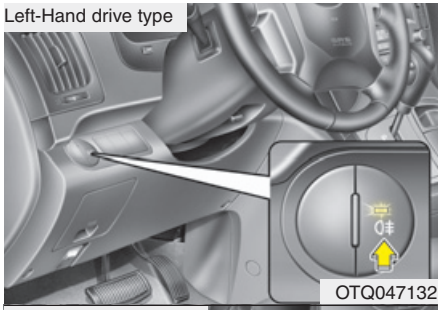

OTQ047132

Right-Hand drive type

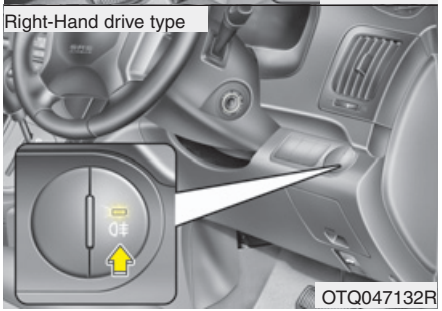

OTQ047132R

D190800AUN

Rear fog light (if equipped)

To turn the rear fog lights on, turn the headlight switch to the headlight on position and press the rear fog light switch (light on switch will illuminate).

The rear fog lights turn on when the rear fog switch is pressed after the front fog switch is turned to ON and the headlight switch to the parklight position. (if equipped)

To turn the rear fog lights off, press the rear fog light switch again or turn the headlight switch to the OFF position.

D190900AUN

Daytime running light (if equipped)

Daytime Running Lights (DRL) can make it easier for others to see the front of your vehicle during the day. DRL can be helpful in many different driving conditions, and it is especially helpful after dawn and before sunset.

The DRL system will make the headlights turn OFF when:

1. The parklight switch is ON.
2. Engine stops.

Left-Hand drive type

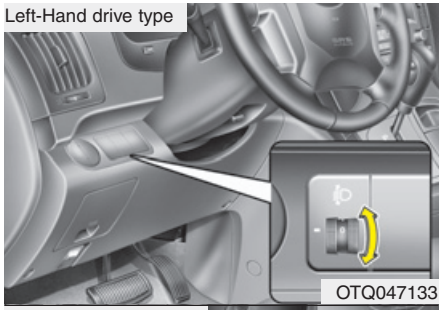

OTQ047133

Right-Hand drive type

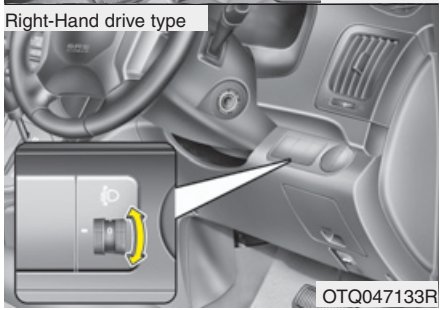

OTQ047133R

Headlight leveling device (if equipped)

D191001ATQ

Manual type

To adjust the headlight beam level according to the number of the passengers and the loading weight in the luggage area, turn the beam leveling switch.

The higher the number of the switch position, the lower the headlight beam level. Always keep the headlight beam at the proper leveling position, or headlights may dazzle other road users.

Listed below are the examples of proper switch settings. For loading conditions other than those listed below, adjust the switch position so that the beam level may be the nearest as the condition obtained according to the list.

Loading condition	Switch position	
	Wagon	Van
Driver only	0	0
Driver + Front passenger	0	0
Driver + Front passenger + 4th row passenger	1	-
Full passengers (including driver)	1	-
Full passengers (including driver) + Maximum permissible loading	2	1
Driver + Maximum permissible loading	3	1

WIPERS AND WASHERS

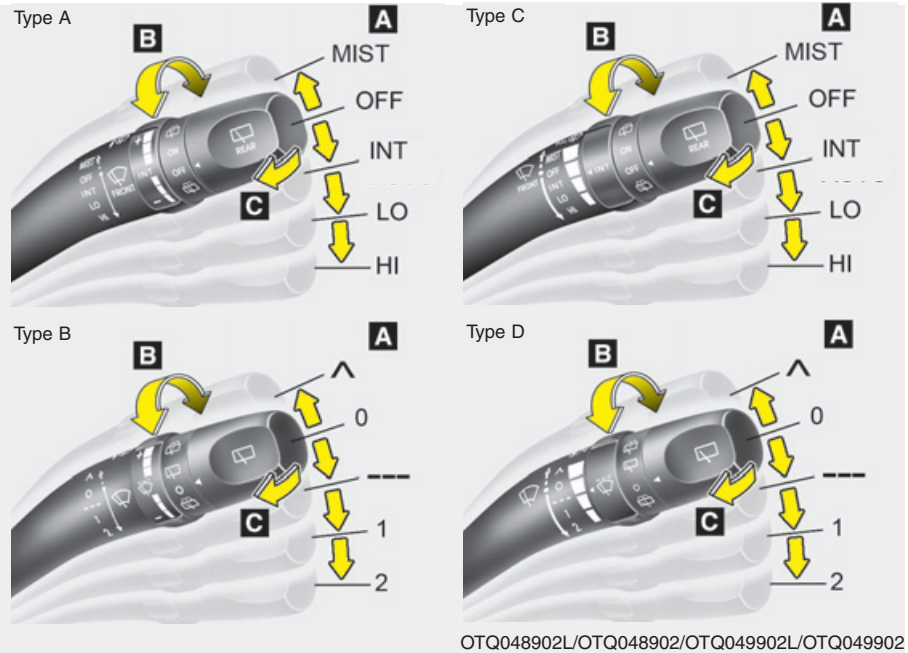

OTQ048902L/OTQ048902/OTQ049902L/OTQ049902

A : Wiper speed control

- ⋀ / MIST – Single wipe
- OFF (0) – Off
- INT (---) – Intermittent wipe (if equipped)
- LO (1) – Low wiper speed
- HI (2) – High wiper speed

B : Intermittent wipe time adjustment

C : Wash with brief wipes

D200100BTQ

Windshield wipers

Operates as follows when the ignition switch is turned ON.

⋀ / MIST: For a single wiping cycle, push the lever upward and release it with the lever in the OFF (0) position. The wipers will operate continuously if the lever is pushed upward and held.

OFF (0) : Wiper is not in operation

INT (---) : Wiper operates intermittently at the same wiping intervals. Use this mode in a light rain or mist. To vary the speed setting, turn the speed control knob.

LO (1) : Normal wiper speed

HI (2) : Fast wiper speed

✻ NOTICE

If there is heavy accumulation of snow or ice on the windshield, defrost the windshield for about 10 minutes, or until the snow and/or ice is removed before using the windshield wipers to ensure proper operation.

✻ NOTICE

- **When you operate the wipers, if your vehicle has a problem in any part of the wiper operation system, the wiper may operate in the LO mode regardless of the wiper switch position. In this case, have your vehicle checked by an authorized HYUNDAI dealer as soon as possible.**
- **When the ignition key is removed, the wiper blade sometimes may move to properly position slightly for reducing the deterioration of the windshield wipers.**

D200200AUN

Windshield washers

In the OFF (0) position, pull the lever gently toward you to spray washer fluid on the windshield and to run the wipers 1-3 cycles.

Use this function when the windshield is dirty.

The spray and wiper operation will continue until you release the lever.

If the washer does not work, check the washer fluid level. If the fluid level is not sufficient, you will need to add appropriate non-abrasive windshield washer fluid to the washer reservoir.

The reservoir filler neck is located in the front of the engine compartment on the passenger side.

⚠ CAUTION

To prevent possible damage to the washer pump, do not operate the washer when the fluid reservoir is empty.

⚠ WARNING

Do not use the washer in freezing temperatures without first warming the windshield with the defrosters; the washer solution could freeze on contact with the windshield and obscure your vision.

⚠ CAUTION

- ***To prevent possible damage to the wipers or windshield, do not operate the wipers when the windshield is dry.***
- ***To prevent damage to the wiper blades, do not use gasoline, kerosene, paint thinner, or other solvents on or near them.***
- ***To prevent damage to the wiper arms and other components, do not attempt to move the wipers manually.***

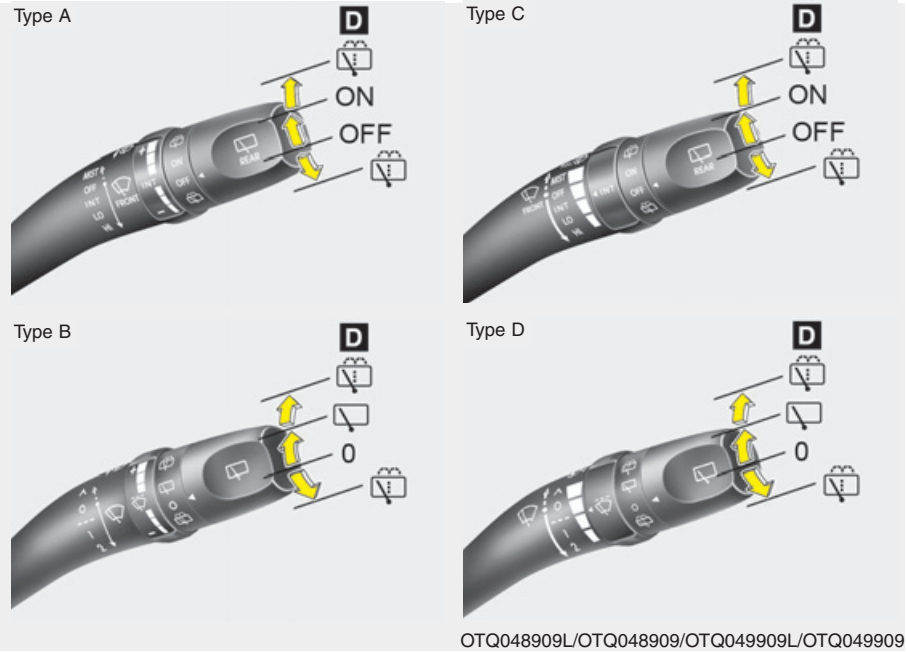

OTQ048909L/OTQ048909/OTQ049909L/OTQ049909

D : Rear wiper/washer control

- – Spraying washer fluid
- ON ( )– Continuous wipe
- OFF (0) – Off
- – Wash with brief wipes

D200300ATQ

Rear Window Wiper and Washer (if equipped)

Turn the switch to desired position to operate the rear wiper and washer.

- Wash with brief wipes

ON ( ) - Normal wiper operation

OFF (0) - Wiper is not in operation

- Spraying washer fluid and wiping

✻ NOTICE

Do not operate the washer continuously for more than 15 seconds or when the fluid reservoir is empty; this could damage the system. Do not operate the wiper when the window is dry; this can result in scratching as well as premature wiper blade wear. For the same reason, do not operate the washer when the washer fluid reservoir is empty.

INTERIOR LIGHT

D210000BEN

⚠ CAUTION

Do not use the interior lights for extended periods when the engine is not running.
It may cause battery discharge.

⚠ WARNING

Do not use the interior lights when driving in the dark. Accidents could happen because the view may be obscured by interior lights.

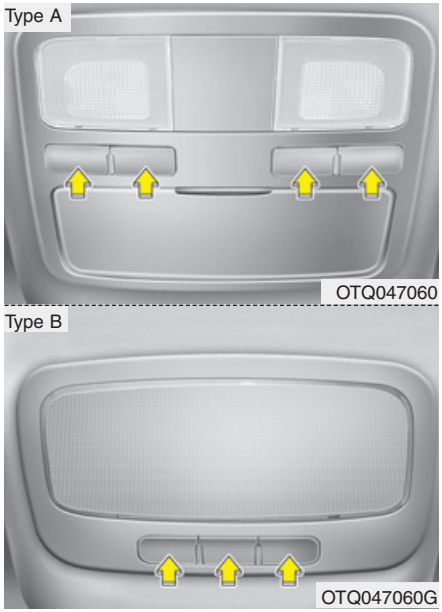

D210100ATQ

Map lamp (if equipped)

- : Push the switch to turn the map lamp on or off. This light produces a spot beam for convenient use as a map lamp at night or as a personal lamp for the driver and the front passenger.
- DOOR : In the DOOR position, the light comes on when any door is opened regardless of the ignition switch position. When doors are unlocked by the transmitter, the light comes on for approximately 30 seconds as long as any door is not open. The light goes out gradually after approximately 30 seconds if the door is closed. However, if the ignition switch is ON or all doors are locked, the light will turn off immediately.

  If a door is opened with the ignition switch in the ACC or LOCK position, the light stays on for about 20 minutes. However, if a door is opened with the ignition switch in the ON position, the light stays on continuously.
- ROOM : In the ROOM position, the light stays on at all times.

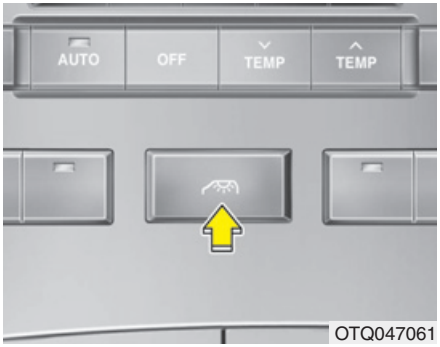

D210200ATQ

Room lamp (Rear, if equipped)

- : Push the switch to turn the rear room lamp on or off.

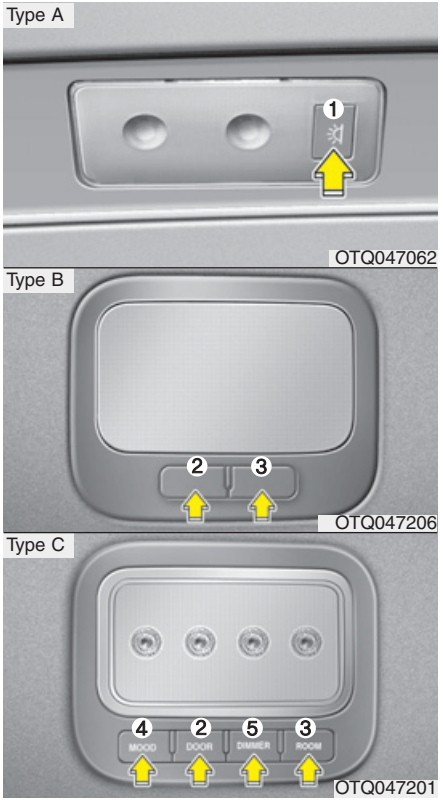

① : Push the switch to turn the map lamp on or off. This light produces a spot beam for convenient use as a map lamp at night or as a personal lamp for the rear passenger.

② DOOR / : In the DOOR position, the light comes on when any door is opened regardless of the ignition switch position.

③ ROOM / : In the ROOM position, the light stays on at all times.

⚠ CAUTION

Do not leave the switch in this position for an extended period of time when the vehicle is not running.

④ MOOD : Push the switch to turn the mood lamp on when the room lamp is off. Once the mood lamp is on, each time you press the button the color of the light will change. The mood lamp will turn off when the button is pressed again after the last color or when the mood lamp button is pressed for approximately 4 seconds or when the ROOM, DOOR or DIMMER button is pressed.

⑤ DIMMER : Whenever you push this button when the room lamp is turned on, the brightness of the room lamp will change within 3 level.

DEFROSTER (IF EQUIPPED)

D220000AUN

⚠ CAUTION

To prevent damage to the conductors bonded to the inside surface of the rear window, never use sharp instruments or window cleaners containing abrasives to clean the window.

✻ NOTICE

If you want to defrost and defog the front windshield, refer to "Windshield defrosting and defogging" in this section.

OTQ047064

D220100AUN

Rear window defroster (if equipped)

The defroster heats the window to remove frost, fog and thin ice from the rear window, while the engine is running.

To activate the rear window defroster, press the rear window defroster button located in the center facia switch panel. The indicator on the rear window defroster button illuminates when the defroster is ON.

If there is heavy accumulation of snow on the rear window, brush it off before operating the rear defroster.

The rear window defroster automatically turns off after approximately 20 minutes or when the ignition switch is turned off. (if equipped) To turn off the defroster, press the rear window defroster button again.

MANUAL CLIMATE CONTROL SYSTEM (IF EQUIPPED)

■ **Front climate control**

■ **Rear climate control (if equipped)**

1. Fan speed control knob
2. Air conditioning button (if equipped)
3. Temperature control knob
4. Mode selection knob
5. Rear fan speed control knob/ Rear climate control selection knob (if equipped)
6. Rear temperature control button (if equipped)
7. Rear window defroster button
8. Air intake control button
9. Rear fan speed control knob (if equipped)
10. Rear temperature control (if equipped) and mode selection knob (if equipped)

OTQ047066/OTQ047067

D230000ATQ

D230100ATQ

Heating and air conditioning

1. Start the engine.
2. Set the mode to the desired position.
   For improving the effectiveness of heating and cooling;
   - Heating:
   - Cooling:
3. Set the temperature control to the desired position.
4. Set the air intake control to the outside (fresh) air position.
5. Set the fan speed control to the desired speed.
6. If air conditioning is desired, turn the air conditioning system (if equipped) on.

OTQ047069L

OTQ047068

D230101ATQ

Mode selection

The mode selection knob controls the direction of the air flow through the ventilation system.

Air can be directed to the floor, dashboard outlets, or windshield.

Face-Level (B, D)

Air flow is directed toward the upper body and face. Additionally, each outlet can be controlled to direct the air discharged from the outlet.

Bi-Level (B, D, C, F)

Air flow is directed towards the face and the floor.

Floor-Level (C, F, A, D)

Most of the air flow is directed to the floor, with a small amount of the air being directed to the windshield and side window defrosters.

Floor/Defrost-Level (A, C, F, D)

Most of the air flow is directed to the floor and the windshield with a small amount directed to the side window defrosters.

Defrost-Level (A)

Most of the air flow is directed to the windshield with a small amount of air directed to the side window defrosters.

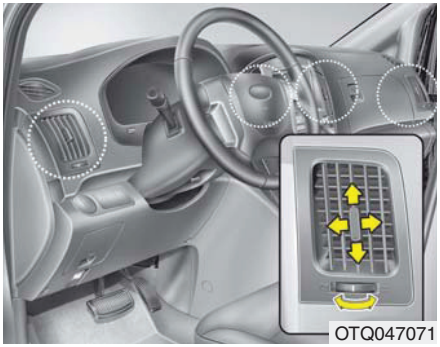
OTQ047071

Instrument panel vents

The outlet vents can be opened or closed separately using the horizontal thumb-wheel. To close the vent, rotate it left to the maximum position. To open the vent, rotate it right to the desired position.

Also, you can adjust the direction of air delivery from these vents using the vent control lever as shown.

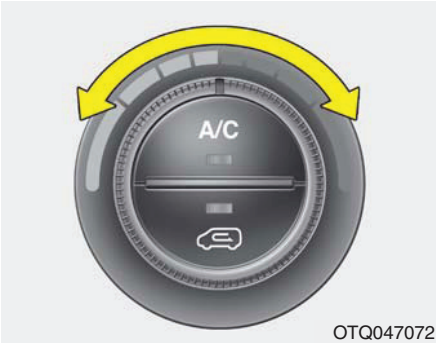

OTQ047072

D230102AUN

Temperature control

The temperature control knob allows you to control the temperature of the air flowing from the ventilation system. To change the air temperature in the passenger compartment, turn the knob to the right position for warm and hot air or left position for cooler air.

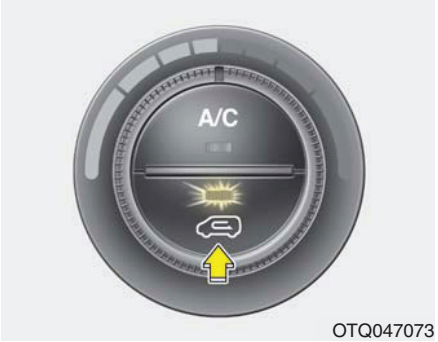

OTQ047073

D230103AUN

Air intake control

This is used to select the outside (fresh) air position or recirculated air position.

To change the air intake control position, push the control button.

Recirculated air position

The indicator light on the button illuminates when the recirculated air position is selected.

With the recirculated air position selected, air from the passenger compartment will be drawn through the heating system and heated or cooled according to the function selected.

Outside (fresh) air position

The indicator light on the button will not illuminate when the outside (fresh) air position is selected.

With the outside (fresh) air position selected, air enters the vehicle from outside and is heated or cooled according to the function selected.

✻ NOTICE

Prolonged operation of the heater in the recirculated air position (without air conditioning selected) may cause fogging of the windshield and side windows and the air within the passenger compartment may become stale.
In addition, prolonged use of the air conditioning with the recirculated air position selected will result in excessively dry air in the passenger compartment.

⚠ WARNING

- **Continued climate control system operation in the recirculated air position may allow humidity to increase inside the vehicle which may fog the glass and obscure visibility.**
- **Do not sleep in a vehicle with the air conditioning or heating system on. It may cause serious harm or death due to a drop in the oxygen level and/or body temperature.**
- **Continued climate control system operation in the recirculated air position can cause drowsiness or sleepiness, and loss of vehicle control. Set the air intake control to the outside (fresh) air position as much as possible while driving.**

OTQ047074

D230104AUN

Fan speed control

The ignition switch must be in the ON position for fan operation.

The fan speed control knob allows you to control the fan speed of the air flowing from the ventilation system. To change the fan speed, turn the knob to the right for higher speed or left for lower speed.

Setting the fan speed control knob to the 0 position turns off the fan.

OTQ047075

D230105AUN

Air conditioning (if equipped)

Push the A/C button to turn the air conditioning system on (indicator light will illuminate). Push the button again to turn the air conditioning system off.

OTQ047076

D230200ATQ

Rear heating and air conditioning (if equipped)

The temperature, fan speed and mode of the rear climate control system can be controlled independently regardless of the front climate control system operation.

Turn the rear climate control selection knob to the “R” and set the rear temperature, fan speed and mode to the desired position.

However, the front climate control system should be operated together for rear air conditioning;

1. Set the front fan speed to the desired position.
2. Push the air conditioning button.
3. Set the rear temperature, fan speed and mode to the desired position.

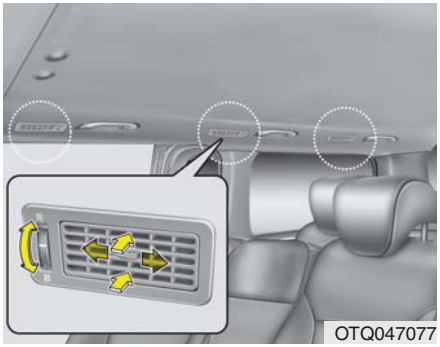

Rear vents

The vent can be adjusted by rotating the thumb wheel.

✻ NOTICE

If all the vents are closed, it may cause some noise. Always open 2 vents or more.

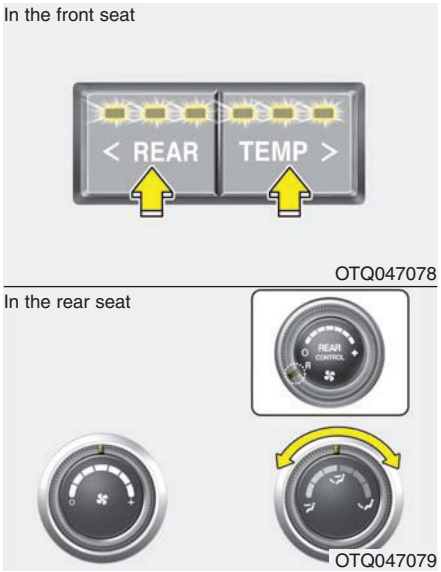

D230202ATQ

Rear temperature control

To change the air temperature in the rear passenger compartment, turn the knob to the right for warm and hot air or left for cooler air.

The rear mode is selected automatically by selecting the rear temperature control.

- : Rear air blows from the upper vents on the rear side ceiling.
- : Rear air blows from the upper vents on the rear side ceiling and the lower vents on the floor.
- : Rear air blows from the lower vents on the floor.

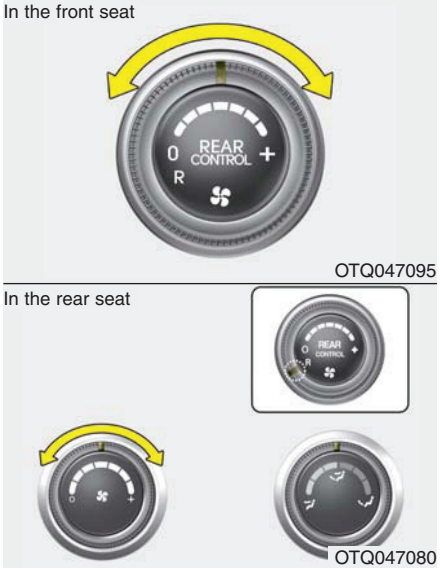

D230203ATQ

Rear fan speed control

To change the fan speed, turn the knob to the right for higher speed or left for lower speed.

To turn off the fan, turn the knob to the 0 position.

System operation

D230501AUN

Ventilation

1. Set the mode to the position.
2. Set the air intake control to the outside (fresh) air position.
3. Set the temperature control to the desired position.
4. Set the fan speed control to the desired speed.

D230502AUN

Heating

1. Set the mode to the position.
2. Set the air intake control to the outside (fresh) air position.
3. Set the temperature control to the desired position.
4. Set the fan speed control to the desired speed.
5. If dehumidified heating is desired, turn the air conditioning system (if equipped) on.

- If the windshield fogs up, set the mode to the or position.

Operation Tips

- To keep dust or unpleasant fumes from entering the car through the ventilation system, temporarily set the air intake control to the recirculated air position. Be sure to return the control to the fresh air position when the irritation has passed to keep fresh air in the vehicle. This will help keep the driver alert and comfortable.
- Air for the heating/cooling system is drawn in through the grilles just ahead of the windshield. Care should be taken that these are not blocked by leaves, snow, ice or other obstructions.
- To prevent interior fog on the windshield, set the air intake control to the fresh air position and fan speed to the desired position, turn on the air conditioning system, and adjust the temperature control to desired temperature.

D230503AFD

Air conditioning (if equipped)

HYUNDAI Air Conditioning Systems are filled with environmentally friendly R-134a refrigerant which does not damage the ozone layer.

1. Start the engine. Push the air conditioning button.
2. Set the mode to the position.
3. Set the air intake control to the outside air or recirculated air position.
4. Adjust the fan speed control and temperature control to maintain maximum comfort.

- When maximum cooling is desired, set the temperature control to the extreme left position, then set the fan speed control to the highest speed.

✻ NOTICE

- **When using the air conditioning system, monitor the temperature gauge closely while driving up hills or in heavy traffic when outside temperatures are high. Air conditioning system operation may cause engine overheating. Continue to use the blower fan but turn the air conditioning system off if the temperature gauge indicates engine overheating.**
- **When opening the windows in humid weather air conditioning may create water droplets inside the vehicle. Since excessive water droplets may cause damage to electrical equipment, air conditioning should only be run with the windows closed.**

Air conditioning system operation tips

- If the vehicle has been parked in direct sunlight during hot weather, open the windows for a short time to let the hot air inside the vehicle escape.
- To help reduce moisture inside of the windows on rainy or humid days, decrease the humidity inside the vehicle by operating the air conditioning system.
- During air conditioning system operation, you may occasionally notice a slight change in engine speed as the air conditioning compressor cycles. This is a normal system operation characteristic.
- Use the air conditioning system every month only for a few minutes to ensure maximum system performance.

- When using the air conditioning system, you may notice clear water dripping (or even puddling) on the ground under the passenger side of the vehicle. This is a normal system operation characteristic.
- Operating the air conditioning system in the recirculated air position provides maximum cooling, however, continual operation in this mode may cause the air inside the vehicle to become stale.
- During cooling operation, you may occasionally notice a misty air flow because of rapid cooling and humid air intake. This is a normal system operation characteristics.

D230504ATQ

Fuel-fired Heater (If Equipped)

This fuel-fired heater supplies additional heat to the interior compartment with a low fuel consumption to compensate the heat provided by engine alone.

The following 3 conditions should be meet at the same time for automatic operation of the fuel-fired heater.

- Engine runs.
- Ambient temperature is lower than 5°C.
- Coolant temperature is lower than 68°C.

A cleaning process of the fuel-fired heater will be performed automatically when the heater is not operated due to increase of coolant temperature and ignition off.

During cleaning process, supplied fuel in the heater will be burnt completely and any smoke will be expelled. It is a necessary process for next operation and durability of the heater and takes about 1~3 minutes.

✻ NOTICE

- **The following symptoms will occur and it is normal.**
  - **A white smoke may come out from the fuel-fired heater exhaust pipe during operation of the heater. However, when an excessive black smoke is discharged, the fuel-fired heater should be inspected.**
  - **A “buk-buk” noise from the heater is a noise to form flame for combustion.**
  - **When the heater is operated at full load, a “Wooing” noise occurs.**
  - **When shutting off the engine during heater operation, a “Wing” noise occurs to perform the cleaning process.**
- **When refueling, stop operation of the fuel-fired heater by shutting off the engine.**

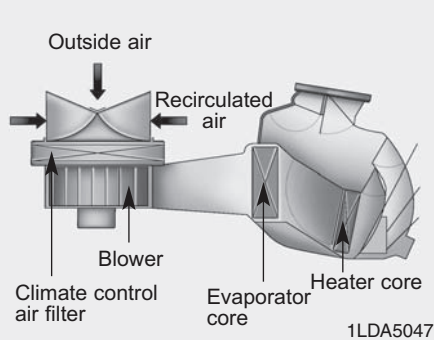

D230300AFD

Climate control air filter (if equipped)

The climate control air filter installed behind the glove box filters the dust or other pollutants that come into the vehicle from the outside through the heating and air conditioning system. If dust or other pollutants accumulate in the filter over a period of time, the air flow from the air vents may decrease, resulting in moisture accumulation on the inside of the windshield even when the outside (fresh) air position is selected. If this happens, have the climate control air filter replaced by an authorized HYUNDAI dealer.

✻ NOTICE

- **Replace the filter according to the Maintenance Schedule.**
  If the car is being driven in severe conditions such as dusty or rough roads, more frequent air conditioner filter inspections and changes are required.
- **When the air flow rate suddenly decreases, the system should be checked at an authorized HYUNDAI dealer.**

D230400AEN

Checking the amount of air conditioner refrigerant and compressor lubricant

When the amount of refrigerant is low, the performance of the air conditioning is reduced. Overfilling also has a negative impact on the air conditioning system.

Therefore, if abnormal operation is found, have the system inspected by an authorized HYUNDAI dealer.

✻ NOTICE

It is important when servicing the air conditioning system that the correct type and amount of oil and refrigerant is used. Otherwise, damage to the compressor and abnormal system operation may occur.

⚠ WARNING

The air conditioning system should be serviced by an authorized HYUNDAI dealer. Improper service may cause serious injury to the person performing the service.

WINDSHIELD DEFROSTING AND DEFOGGING

D250000AEN

⚠ WARNING - Windshield heating

Do not use the or position during cooling operation in extremely humid weather. The difference between the temperature of the outside air and that of the windshield could cause the outer surface of the windshield to fog up, causing loss of visibility. In this case, set the mode selection knob or button to the position and fan speed control knob or button to the lower speed.

- For maximum defrosting, set the temperature control to the extreme right/hot position and the fan speed control to the highest speed.
- If warm air to the floor is desired while defrosting or defogging, set the mode to the floor-defrost position.
- Before driving, clear all snow and ice from the windshield, rear window, outside rear view mirrors, and all side windows.
- Clear all snow and ice from the hood and air inlet in the cowl grill to improve heater and defroster efficiency and to reduce the probability of fogging up the inside of the windshield.

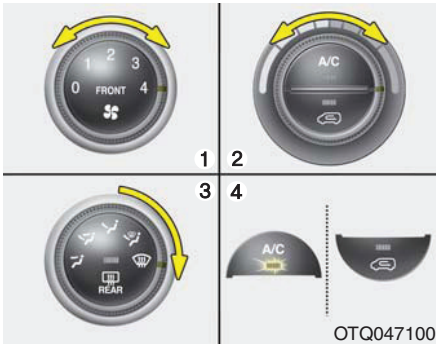

Manual climate control system

D250101ATQ

To defog inside windshield

1. Select any fan speed except “0” position.
2. Select desired temperature.
3. Select the or position.
4. If the position is selected, the outside (fresh) air and air conditioning will be selected automatically.

If the air conditioning and outside (fresh) air position are not selected automatically, press the corresponding button manually.

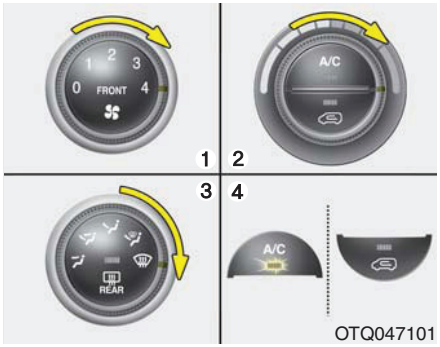

D250102AFD

To defrost outside windshield

1. Set the fan speed to the highest (extreme right) position.
2. Set the temperature to the extreme hot position.
3. Select the position.
4. The outside (fresh) air and air conditioning will be selected automatically.

D250300ATQ

Defogging logic (if equipped)

To reduce the possibility of fogging up the inside of the windshield, the air intake or air conditioning are controlled automatically according to certain conditions such as position. To cancel or return the defogging logic, do the following.

D250301AUN

Manual climate control system

1. Turn the ignition switch to the ON position.
2. Turn the mode selection knob to the defrost position ( ).
3. Push the air intake control button at least 5 times within 3 seconds.

The indicator light in the air intake control button will blink 3 times with 0.5 second of interval. It indicates that the defogging logic is canceled or returned to the programmed status.

If the battery has been discharged or disconnected, it resets to the defog logic status.

STORAGE COMPARTMENT

D270000AUN

These compartments can be used to store small items required by the driver or passengers.

⚠ CAUTION

- ***To avoid possible theft, do not leave valuables in the storage compartment.***
- ***Always keep the storage compartment covers closed while driving. Do not attempt to place so many items in the storage compartment that the storage compartment cover cannot close securely.***

⚠ WARNING - Flammable materials

Do not store cigarette lighters, propane cylinders, or other flammable/explosive materials in the vehicle. These items may catch fire and/or explode if the vehicle is exposed to hot temperatures for extended periods.

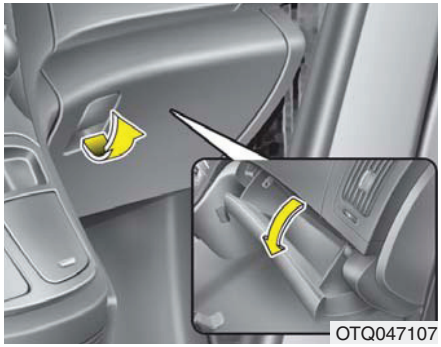
OTQ047107

D270200BUN

Glove box

To open the glove box, pull the handle and the glove box will automatically open. Close the glove box after use.

⚠ WARNING

To reduce the risk of injury in an accident or sudden stop, always keep the glove box door closed while driving.

⚠ CAUTION

Do not keep food in the glove box for a long time.

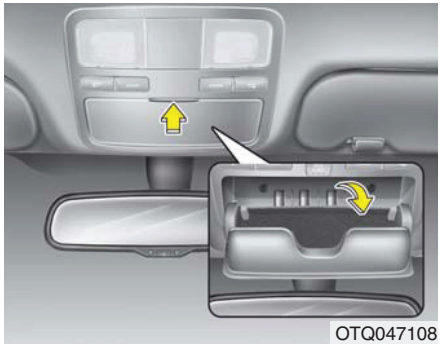
OTQ047108

D270300AUN

Sunglass holder (if equipped)

To open the sunglass holder, press the cover and the holder will slowly open. Place your sunglasses in the compartment door with the lenses facing out. Push to close.

⚠ WARNING

- **Do not keep objects except sunglasses inside the sunglass holder. Such objects can be thrown from the holder in the event of a sudden stop or an accident, possibly injuring the passengers in the vehicle.**
- **Do not open the sunglass holder while the vehicle is moving. The rear view mirror of the vehicle can be blocked by an open sunglass holder.**

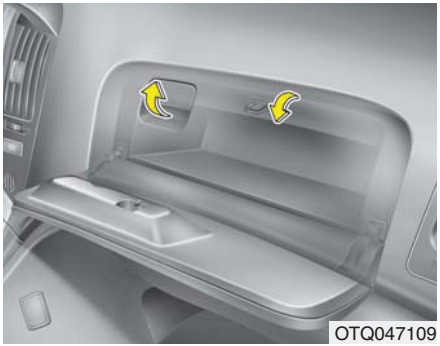

D270400ATQ

Multi box (if equipped)

To open the cover, pull the handle down. Close the cover after use.

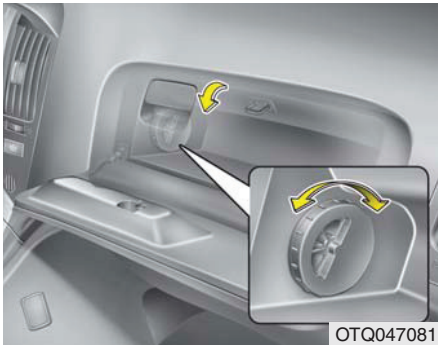

D230600ATQ

Cool box (if equipped)

You can keep beverage cans or other items cool using the open/close lever of the vent installed in the multi box.

1. Turn on the fan and set the temperature control to the desired position.
2. Set the mode control to the face ( ) or bi-level ( ) position.
3. Turn the open/close lever of the vent installed in the multi box to the open position.
4. When the cool box is not used, turn the lever to its closed position.

For improving the effectiveness of the cool box, do as follows;

1. Set the temperature to the cold (extreme left) position for cool air.
   Turn on the air conditioning system for cooler air.
2. Set the fan speed to the highest (extreme right) position.
3. Set the mode to the face ( ) position.

✻ NOTICE

If some items in the cool box block the vent, the cooling effectiveness of the cool box is reduced.

⚠ WARNING

Do not put the perishable food in the cool box because it may not be able to maintain the necessary consistent temperature to keep the food fresh.

INTERIOR FEATURES

D280100BEN

Cigarette lighter

For the cigarette lighter to work, the ignition switch must be in the ACC position or the ON position.

To open the cover, press the cover and it will slowly open.

To use the cigarette lighter, push it all the way into its socket. When the element has heated, the lighter will pop out to the "ready" position.

If it is necessary to replace the cigarette lighter, use only a genuine HYUNDAI replacement or its approved equivalent.

⚠ WARNING

- **Do not hold the lighter in after it is already heated because it will overheat.**
- **If the lighter does not pop out within 30 seconds, remove it to prevent overheating.**

⚠ CAUTION

The use of plug-in accessories (shavers, hand-held vacuums, and coffee pots, etc.) may damage the socket or cause electrical failure.

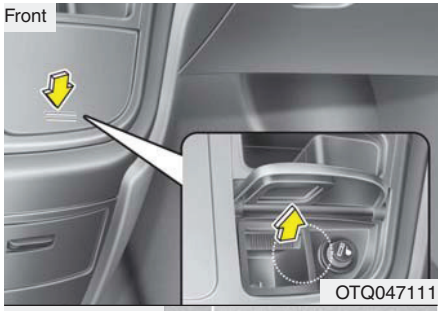

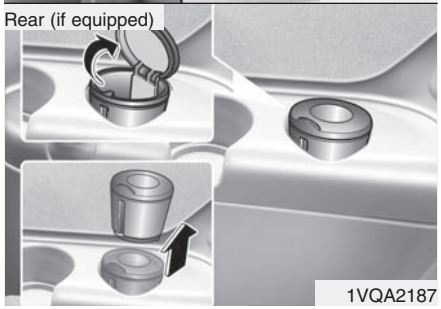

D280200ATQ

Ashtray

⚠ WARNING - Ashtray use

- **Do not use the vehicle's ashtrays as waste receptacles.**
- **Putting lit cigarettes or matches in an ashtray with other combustible materials may cause a fire.**

Front

To open the cover, press the cover and it will slowly open. To clean the ashtray, the plastic receptacle should be removed by lifting the plastic ash receptacle upward and pulling it out.

Rear (if equipped)

To use the ashtray, open the cover.

To remove the ashtray to empty or clean, pull it up and out.

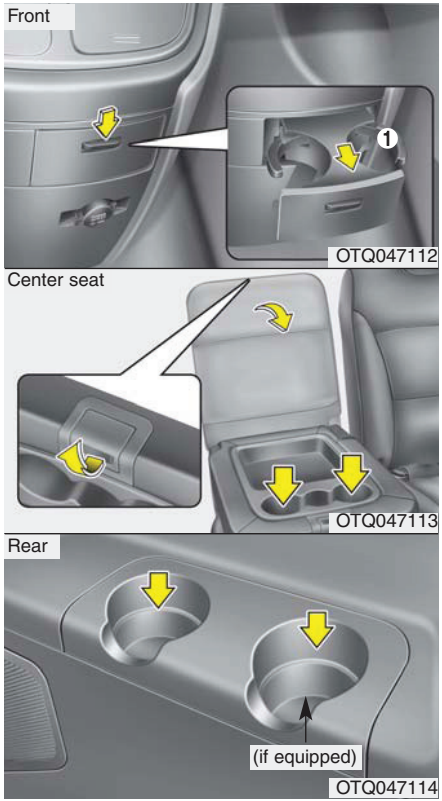

D280300BTQ

Cup holder

⚠ WARNING - Hot liquids

- **Do not place uncovered cups of hot liquid in the cup holder while the vehicle is in motion. If the hot liquid spills, you burn yourself. Such a burn to the driver could lead to loss of control of the vehicle.**
- **To reduce the risk of personal injury in the event of sudden stop or collision, do not place uncovered or unsecured bottles, glasses, cans, etc., in the cup holder while the vehicle is in motion.**

⚠ WARNING

Keep cans or bottles out of direct sun light and do not put them in a vehicle that is heated up. It may explode.

Front

To open the cover, press the knob on the cover and it will slowly open.
Place a cup or small beverage can after pulling out the blade (1).

Center seat/Rear (if equipped)

Cups or small beverage cans may be placed in the cup holders.

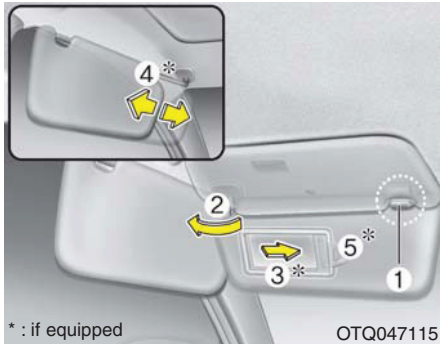

D280400BTQ

Sunvisor

Use the sunvisor to shield direct light through the front or side windows.

To use a sunvisor, pull it downward.

To use a sunvisor for a side window, pull it downward, unsnap it from the bracket (1) and swing it to the side (2).

To use the vanity mirror (if equipped), pull down the visor and slide the mirror cover (3).

Adjust the sunvisor forward or backward (4, if equipped).

The ticket holder (5) is provided for holding a tollgate ticket. (if equipped)

⚠ CAUTION - Vanity mirror lamp (if equipped)

Close the vanity mirror cover securely and return the sunvisor to its original position after use. If the vanity mirror is not closed securely, the lamp will stay on and could result in battery discharge and possible sunvisor damage.

⚠ WARNING

For your safety, do not obstruct your vision when using the sunvisor.

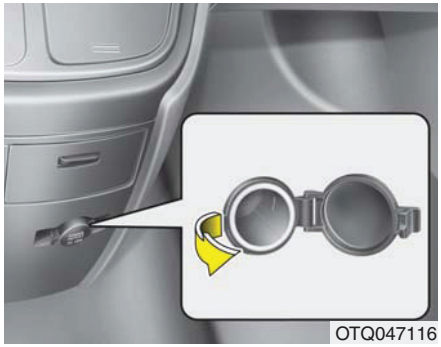

D280500AEN

Power outlet (if equipped)

The power outlet is designed to provide power for mobile telephones or other devices designed to operate with vehicle electrical systems. The devices should draw less than 10 amps with the engine running.

⚠ WARNING

Do not put a finger or a foreign element (pin, etc.) into a power outlet and do not touch with a wet hand. You may get an electric shock.

⚠ CAUTION

- ***Use the power outlet only when the engine is running and remove the accessory plug after use. Using the accessory plug for prolonged periods of time with the engine off could cause the battery to discharge.***
- ***Only use 12V electric accessories which are less than 10A in electric capacity.***
- ***Adjust the air-conditioner or heater to the lowest operating level when using the power outlet.***
- ***Close the cover when not in use.***
- ***Some electronic devices can cause electronic interference when plugged into a vehicle's power outlet. These devices may cause excessive audio static and malfunctions in other electronic systems or devices used in your vehicle.***

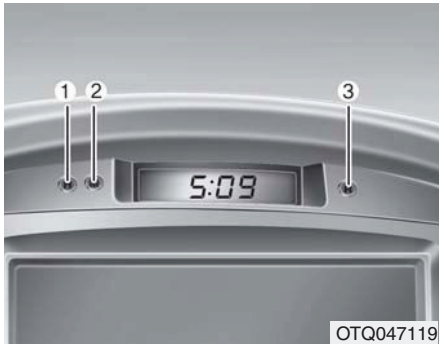

D280600AEN

Digital clock (if equipped)

⚠ WARNING

Do not adjust the clock while driving. You may lose your steering control and cause an accident that results in severe personal injury or death.

Whenever the battery terminals or related fuses are disconnected, you must reset the time.

When the ignition switch is in the ACC or ON position, the clock buttons operate as follows:

D280601AUN

Hour (1)

Pressing the H button with your finger, a pencil or similar object will advance the time displayed by one hour.

D280602AUN

Minute (2)

Pressing the M button with your finger, a pencil or similar object will advance the time displayed by one minute.

D280603AUN

Reset (3)

To clear away minutes, press the R button with your finger, a pencil or similar object. Then the clock will be set precisely on the hour.

For example, if the R button is pressed while the time is between 9:01 and 9:29, the display will be reset to 9:00.

9:01 ~ 9:29 display changed to 9:00

9:30 ~ 9:59 display changed to 10:00

D280604AEN

Display conversion (if equipped)

To change the 12 hour format to the 24 hour format, press the R button until the display blinks.

For example, if the R button is pressed while the time is 10:15 p.m., the display will be changed to 22:15.

D280800AEN

Clothes hanger (if equipped)

⚠ CAUTION

Do not hang heavy clothes, since those may damage the hook.

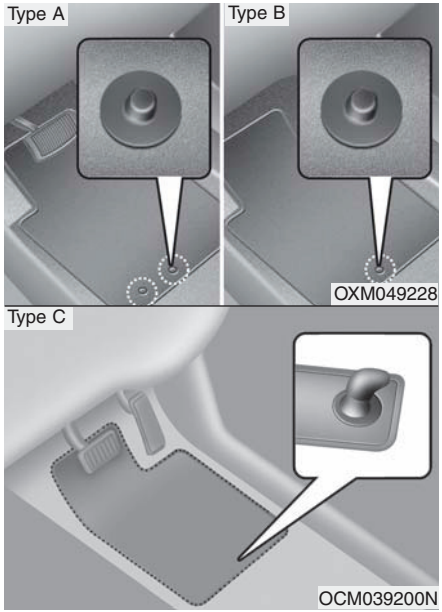

D280900BTQ

Floor mat anchor(s) (if equipped)

When using a floor mat on the front floor carpet, make sure it attaches to the floor mat anchor(s) in your vehicle. This keeps the floor mat from sliding forward.

⚠ WARNING

The following must be observed when installing ANY floor mat to the vehicle.

- **Ensure that the floor mats are securely attached to the vehicle's floor mat anchor(s) before driving the vehicle.**
- **Do not use ANY floor mat that cannot be firmly attached to the vehicle's floor mat anchors.**
- **Do not stack floor mats on top of one another (e.g. all-weather rubber mat on top of a carpeted floor mat). Only a single floor mat should be installed in each position.**

IMPORTANT – Your vehicle was manufactured with driver's side floor mat anchors that are designed to securely hold the floor mat in place. To avoid any interference with pedal operation, HYUNDAI recommends that only the HYUNDAI floor mat designed for use in your vehicle be installed.

AUDIO SYSTEM

✻ NOTICE

If you install an aftermarket HID head lamp, your vehicle's audio and electronic device may malfunction.

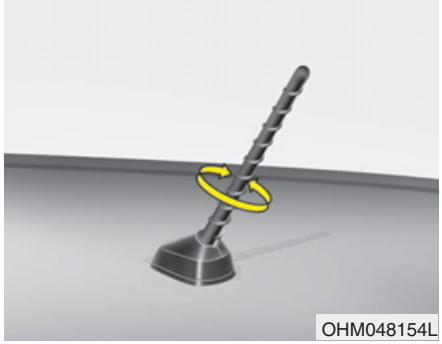

Antenna

D300102ATQ

Roof antenna (if equipped)

Your car uses a roof antenna to receive both AM and FM broadcast signals. This antenna is a removable type. To remove the antenna, turn it counterclockwise. To install the antenna, turn it clockwise.

⚠ CAUTION

- ***Before entering a place with a low height clearance or a car wash, remove surely the antenna by rotating it counterclockwise. If not, the antenna may be damaged.***
- ***When reinstalling your antenna, it is important that it is fully tightened. But it could be removed when parking the vehicle or when loading cargo on the roof rack.***
- ***When cargo is loaded on the roof rack, do not place the cargo near the antenna pole to ensure proper reception.***

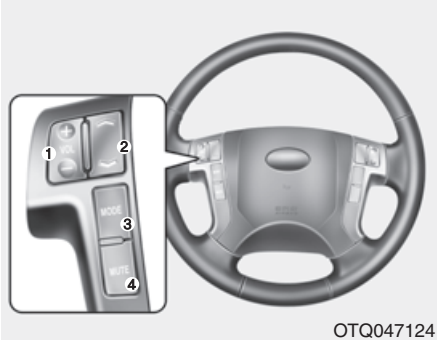

OTQ047124

D300200ATQ

Steering wheel audio control (if equipped)

The steering wheel audio remote control button is installed to promote safe driving.

⚠ CAUTION

Do not operate audio remote control buttons simultaneously.

D300204AHM

VOLUME (VOL +/-) (1)

- Press the lever upward (+) to increase the volume.
- Press the lever downward (-) to decrease the volume.

D300203AHM

SEEK/PRESET (∧ / ∨) (2)

The SEEK/PRESET button has different functions based on the system mode. For the following functions the button should be pressed for 0.8 seconds or more.

RADIO mode

It will function as the AUTO SEEK select button.

CD/USB/iPod mode

It will function as the FF/REW button.

If the SEEK/PRESET button is pressed for less than 0.8 second, it will work as follows in each mode.

RADIO mode

It will function as the PRESET STATION buttons.

CD/USB/iPod mode

It will function as TRACK UP/DOWN button.

D300202AEN

MODE (3)

Press the button to change audio source.
FM (1~2) ➞ AM ➞ CD ➞ USB/AUX (iPod) ➞ FM...

D300205AHM

MUTE (4)

Press the button to mute the sound.

Detailed information for audio control buttons are described in the following pages in this section.

OTQ040211

D300600AHM-EE

AUX, USB and iPod® port (if equipped)

If your vehicle has an aux and/or USB (universal serial bus) port or iPod port, you can use an aux port to connect audio devices and an USB port to plug in an USB and also an iPod port to plug in an iPod.

✻ NOTICE

When using a portable audio device connected to the power outlet, noise may occur during playback. If this happens, use the power source of the portable audio device.

✻ iPod® is a trademark of Apple Inc.

FM reception

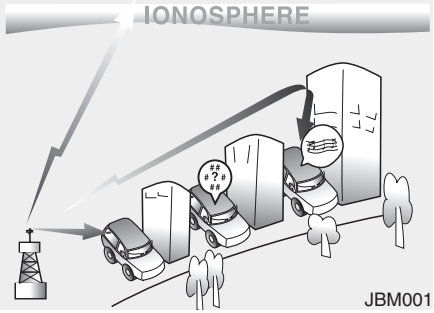

JBM001

D300800AEN

How car audio works

AM (MW, LW) and FM radio signals are broadcast from transmitter towers located around your city. They are intercepted by the radio antenna on your car. This signal is then received by the radio and sent to your car speakers.

When a strong radio signal has reached your vehicle, the precise engineering of your audio system ensures the best possible quality reproduction. However, in some cases the signal coming to your vehicle may not be strong and clear. This can be due to factors such as the distance from the radio station, closeness of other strong radio stations or the presence of buildings, bridges or other large obstructions in the area.

AM(MW, LW) reception

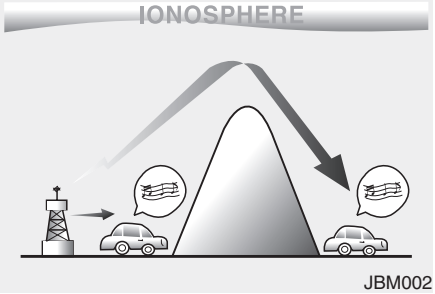

JBM002

AM (MW, LW) broadcasts can be received at greater distances than FM broadcasts. This is because AM (MW, LW) radio waves are transmitted at low frequencies. These long, low frequency radio waves can follow the curvature of the earth rather than travelling straight out into the atmosphere. In addition, they curve around obstructions so that they can provide better signal coverage.

FM radio station

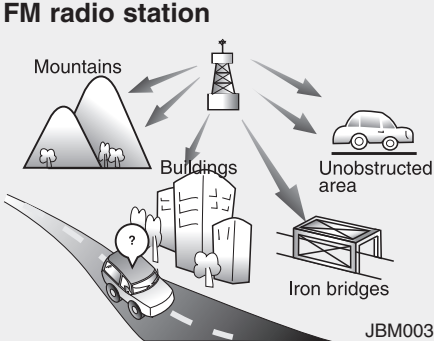

FM broadcasts are transmitted at high frequencies and do not bend to follow the earth's surface. Because of this, FM broadcasts generally begin to fade at short distances from the station. Also, FM signals are easily affected by buildings, mountains, or other obstructions. These can result in certain listening conditions which might lead you to believe a problem exists with your radio. The following conditions are normal and do not indicate radio trouble:

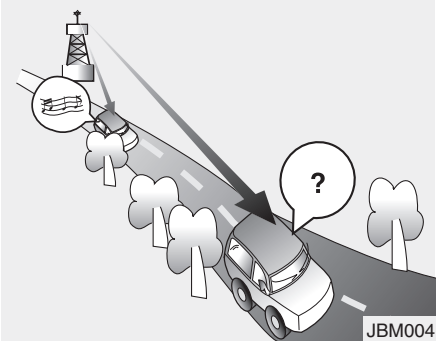

- Fading - As your car moves away from the radio station, the signal will weaken and sound will begin to fade. When this occurs, we suggest that you select another stronger station.
- Flutter/Static - Weak FM signals or large obstructions between the transmitter and your radio can disturb the signal causing static or fluttering noises to occur. Reducing the treble level may lessen this effect until the disturbance clears.

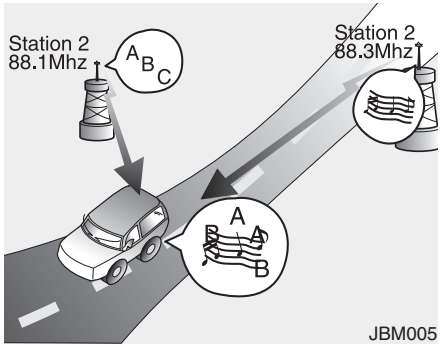

- Station Swapping - As a FM signal weakens, another more powerful signal near the same frequency may begin to play. This is because your radio is designed to lock onto the clearest signal. If this occurs, select another station with a stronger signal.
- Multi-Path Cancellation - Radio signals being received from several directions can cause distortion or fluttering. This can be caused by a direct and reflected signal from the same station, or by signals from two stations with close frequencies. If this occurs, select another station until the condition has passed.

Using a cellular phone or a two-way radio

When a cellular phone is used inside the vehicle, noise may be produced from the audio equipment. This does not mean that something is wrong with the audio equipment. In such a case, use the cellular phone at a place as far as possible from the audio equipment.

⚠ CAUTION

When using a communication system such a cellular phone or a radio set inside the vehicle, a separate external antenna must be fitted. When a cellular phone or a radio set is used with an internal antenna alone, it may interfere with the vehicle's electrical system and adversely affect safe operation of the vehicle.

⚠ WARNING

Don't use a cellular phone when you are driving. You should stop at a safe place to use a cellular phone.

Care of disc (if equipped)

- If the temperature inside the car is too high, open the car windows for ventilation before using your car audio.
- It is illegal to copy and use MP3/WMA/AAC/WAVE files without permission. Use CDs that are created only by lawful means.
- Do not apply volatile agents such as benzene and thinner, normal cleaners and magnetic sprays made for analogue disc onto CDs.
- To prevent the disc surface from getting damaged. Hold and carry CDs by the edges or the edges of the center hole only.
- Clean the disc surface with a piece of soft cloth before playback (wipe it from the center to the outside edge).
- Do not damage the disc surface or attach pieces of sticky tape or paper onto it.
- Make sure on undesirable matter other than CDs are inserted into the CD player (Do not insert more than one CD at a time).
- Keep CDs in their cases after use to protect them from scratches or dirt.
- Depending on the type of CD-R/CD-RW CDs, certain CDs may not operate normally according to manufacturing companies or making and recording methods. In such circumstances, if you still continue to use those CDs, they may cause the malfunction of your car audio system.

✻ NOTICE - Playing an Incompatible Copy-Protected Audio CD

Some copy protected CDs, which do not comply with the international audio CD standards (Red Book), may not play on your car audio. Please note that if you try to play copy protected CDs and the CD player does not perform correctly the CDs maybe defective, not the CD player.

STEREO RADIO PLAYER OPERATION (M420) (IF EQUIPPED)

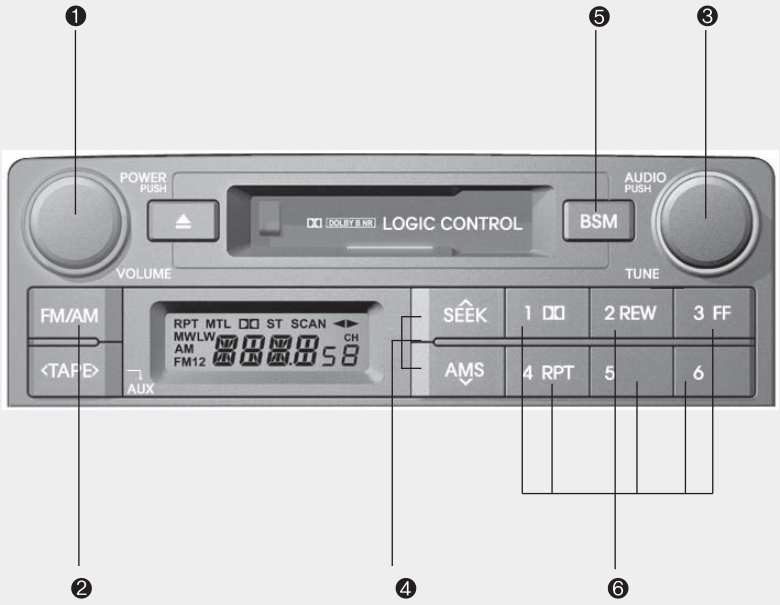

1. POWER ON-OFF, VOLUME Control Knob
2. BAND Select Button
3. TUNE/MODE Select Knob
4. AUTO SEEK Select Button
5. Best Station Memory (BSM) Button
6. PRESET Station Select Buttons

TQ420

1. POWER ON-OFF Control Knob

The radio unit may be operated when the ignition key is in the “ACC” or “ON” position. Press the knob to switch the power on. The LCD shows the radio frequency in the radio mode or the tape direction indicator in the tape mode. To switch the power off, press the knob again.

VOLUME Control

Rotate the knob clockwise to increase the volume and counterclockwise to reduce the volume.

AVC(Auto Volume Control) Feature

As the car runs faster, its running noise also becomes louder.

To compensate this noise, this unit implements AVC feature that increases car audio’s volume level automatically when the car runs faster.

2. BAND Select Button

Pressing the AM/FM button changes the AM(MW, LW), FM1 and FM2 bands.

3. TUNE/MODE Select Knob

Rotate the knob clockwise to increase the frequency and counterclockwise to reduce the frequency.

Mode Select Knob

Pressing the MODE knob changes the BASS, MIDDLE, TREBLE, FADER and BALANCE mode.

The mode selected is shown on the display.

After selecting the each mode, rotate the mode select knob clockwise or counterclockwise.

BASS Control

To increase the BASS, rotate the knob clockwise, while to decrease the BASS, rotate the knob counterclockwise.

MIDDLE Control

To increase the MIDDLE, rotate the knob clockwise, while to decrease the MIDDLE, rotate the knob counterclockwise.

TREBLE Control

To increase the TREBLE, rotate the knob clockwise, while to decrease the TREBLE, rotate the knob counterclockwise.

FADER Control

Rotate the control knob clockwise to emphasize the rear speaker sound (front speaker sound will be attenuated). When the control knob is turned counterclockwise, the front speaker sound will be emphasized (rear speaker sound will be attenuated).

✻ NOTICE

For the VAN type car, FADER control feature is not supported(no rear speaker equipped).

BALANCE Control

Rotate the knob clockwise to emphasize the right speaker sound (left speaker sound will be attenuated). When the control knob is turned counterclockwise, the left speaker sound will be emphasized (right speaker sound will be attenuated).

4. AUTO SEEK Select Button (Automatic Channel Selection)

Press the AUTO SEEK select button. When the ∧ side is pressed, the unit will automatically tune to the next higher frequency and when the ∨ side is pressed, it will automatically tune to the next lower frequency.

5. Best Station Memory (BSM) Button

When the BSM button is pressed, the six channels from the highest field intensity are selected next and stored in memory. The stations selected are stored in the sequence of frequency from the first preset key.

6. PRESET STATION Select Buttons

Six stations for AM(MW, LW), FM1 and FM2 respectively can be preset in the electronic memory circuit.

HOW TO PRESET STATIONS

Six AM(MW, LW) and twelve FM stations may be programmed into the memory of the radio. Then, by simply pressing the AM(MW, LW) / FM select button and/or one of the six station select buttons, you may recall any of these stations instantly. To program the stations, follow these steps:

- Press AM(MW, LW)/FM selector to set the band for AM(MW, LW), FM1 and FM2.
- Select the desired station to be stored by seek or manual tuning.
- Determine the preset station select button you wish to use to access that station.
- Press the station select button for more than two seconds. A select button indicator will show in the display indicating which select button you have depressed. The frequency display will flash after it has been stored into the memory. You should then release the button, and proceed to program the next desired station. A total of 24 stations can be programmed by selecting one AM(MW, LW) and two FM station per button.
- When completed, any preset station may be recalled by selecting AM(MW, LW), FM1 or FM2 band and the appropriate station button.

⚠ CAUTION

- ***Do not place beverages close to the audio system. The audio system mechanism may be damaged if you spill them.***
- ***Do not strike or allow anything to impact the audio system, damage to the system mechanisms could occur.***

CASSETTE TAPE PLYER OPERATION (M420) (IF EQUIPPED)

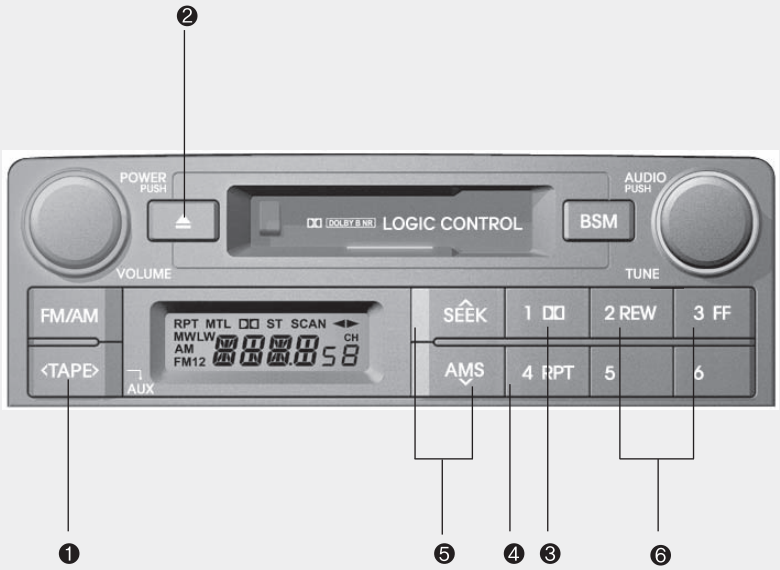

1. Tape Program/AUX Button
2. Tape Eject Button
3. DOLBY Button
4. REPEAT (RPT) Button
5. AUTO MUSIC Search (AMS) Button
6. FF/REW Button

TQ420

1. TAPE PROGRAM/AUX Button

This allows you to play the reverse side of the tape by merely pressing the program button. The PLAY and an arrow will appear in the display to show the tape direction.

- If you press this button more than 0.8 second. you can change to AUX mode.
- AUX mode is available only when AUX jack is plugged in and will change back to the last mode if you pull it out.

2. TAPE EJECT Button

- When the button is pressed with a cassette loaded, the cassette will eject.
- When the button is pressed during FF/REW mode, the cassette will eject.

3. DOLBY Button

If you get background noise during tape PLAY, you can reduce this considerably by merely pressing the DOLBY button. If you want to cancel the DOLBY feature, press the button again.

4. REPEAT (RPT) Button

- To repeat the track you are currently listening to, press the RPT button. To cancel , press again.
- If you do not release RPT operation when the track ends, it will automatically be replayed.
  This process will continue until you push the button again.

5. AUTO MUSIC Search (AMS) Button

Press the button to find the starting point of each song in a prerecorded music tape. The quiet space between songs (must have at least a 4 sec. gap) can be identified by the AUTO MUSIC Search button.

- Pressing the ∧ will play the beginning of the next music segment.
- Pressing the ∨ will start replay at the beginning of the music just listened to.
- To stop FF or REW action, press the button again.

6. FF/REW Button

- Fast forward tape winding starts when the FF button is pressed during PLAY or REW mode.
- PLAY starts when the FF button is pressed again during FF mode.
- Tape rewinding starts when the REW button is pressed during PLAY or FF mode.
- PLAY starts when the REW button pressed again during REW mode.

⚠ CAUTION

- ***Do not insert anything like coins into the player slot as damage to the unit may occur.***
- ***Do not place beverages close to the audio system. The playback mechanism may be damaged if you spill them.***
- ***Do not strike or allow anything to impact the audio system, damage to the system mechanisms could occur.***
- ***When no device is connected to the AUX cable, please pull out the cable from the JACK on the car. (AUX MODE is operational and noise may heard in the AUX MODE.)***

✻ NOTICE

When using a portable audio device connected to the power outlet, noise may occur during playback. If this happens, use the orignal power source of the portable audio device(e.g., batteries).

STEREO RADIO PLAYER OPERATION (M445MP3) (IF EQUIPPED)

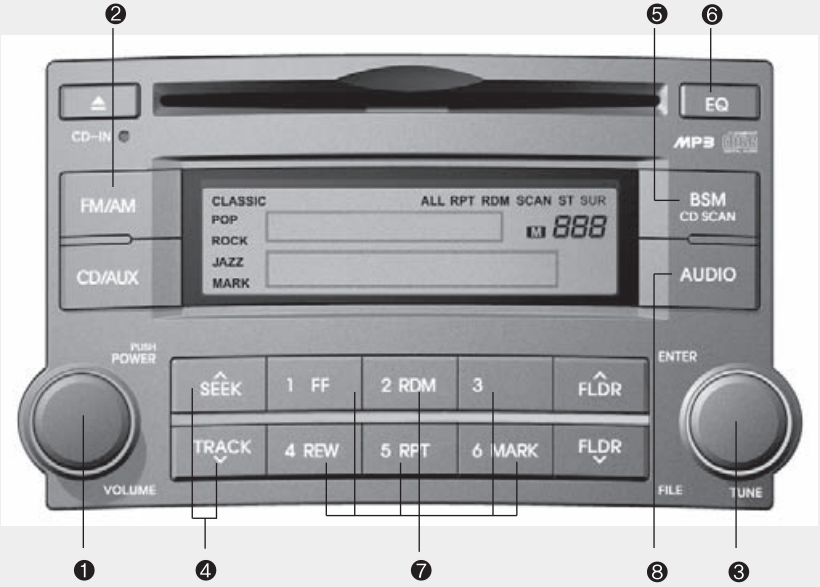

1. POWER ON-OFF, VOLUME Control Knob
2. BAND Select Button
3. TUNE/AUDIO Control Knob
4. AUTO SEEK Select Button
5. Best Station Memory (BSM) Button
6. EQ Button
7. PRESET Station Select Buttons
8. AUDIO Mode Select

TQ445MP3

1. POWER ON-OFF Control Knob

The radio unit may be operated when the ignition key is in the "ACC" or “ON” position. Press the knob to switch the power on. The LCD shows the radio frequency in the radio mode, the tape direction indicator in the tape mode or CD track in either the CD mode or CD AUTO CHANGER mode. To switch the power off, press the knob again.

VOLUME Control

Rotate the knob clockwise to increase the volume and counterclockwise to reduce the volume.

AVC(Auto Volume Control) Feature

As the car runs faster, its running noise also becomes louder.

To compensate this noise, this unit implements AVC feature that increases car audio’s volume level automatically when the car runs faster.

2. BAND Select Button

Pressing the FM/AM button changes the AM(MW, LW), FM1 and FM2 bands. The mode selected is shown on the display.

3. TUNE/AUDIO Control Knob

Rotate the knob clockwise to increase the frequency and counterclockwise to reduce the frequency.

AUDIO Control Knob

Pressing the AUDIO Mode select button changes the BASS, MIDDLE, TREBLE, FADER and BALANCE mode. The mode selected is shown on the display.

BASS Control

To increase the BASS, rotate the knob clockwise, while to decrease the BASS, rotate the knob counterclockwise.

MIDDLE Control

To increase the MIDDLE, rotate the knob clockwise, while to decrease the MIDDLE, rotate the knob counterclockwise.

TREBLE Control

To increase the TREBLE, rotate the knob clockwise, while to decrease the TREBLE, rotate the knob counterclockwise.

FADER Control

Rotate the control knob clockwise to emphasize the rear speaker sound (front speaker sound will be attenuated). When the control knob is turned counterclockwise, the front speaker sound will be emphasized (rear speaker sound will be attenuated).

✻ NOTICE

For the VAN type car, FADER Control feature is not supported(no rear speaker equipped).

BALANCE Control

Rotate the knob clockwise to emphasize the right speaker sound (left speaker sound will be attenuated). When the control knob is turned counterclockwise, the left speaker sound will be emphasized (right speaker sound will be attenuated).

4. AUTO SEEK Select Button (Automatic Channel Selection)

Press the AUTO SEEK select button. When the ∧ side is pressed, the unit will automatically tune to the next higher frequency and when the ∨ side is pressed, it will automatically tune to the next lower frequency.

5. Best Station Memory (BSM) Button

When the BSM button is pressed, the six channels from the highest field intensity are selected next and stored in memory. The stations selected are stored in the sequence frequency from the first preset key.

6. EQ Button

Press the EQ button to select the CLASSIC, POP, ROCK, JAZZ and OFF MODE for the desired tone quality. Each press of the button changes the display as follows;

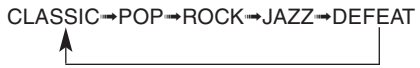

7. PRESET STATION Select Buttons

Six stations for AM(MW, LW), FM1 and FM2 respectively can be preset in the electronic memory circuit.

HOW TO PRESET STATIONS

Six AM(MW, LW) and twelve FM stations may be programmed into the memory of the radio. Then, by simply pressing the AM(MW, LW) / FM select button and/or one of the six station select buttons, you may recall any of these stations instantly. To program the stations, follow these steps:

- Press AM(MW, LW)/FM selector to set the band for AM(MW, LW), FM1 and FM2.
- Select the desired station to be stored by seek or manual tuning.
- Determine the preset station select button you wish to use to access that station.
- Press the station select button for more than two seconds. A select button indicator will show in the display indicating which select button you have depressed. The frequency display will flash after it has been stored into the memory. You should then release the button, and proceed to program the next desired station. A total of 24 stations can be programmed by selecting one AM(MW, LW) and two FM station per button.
- When completed, any preset station may be recalled by selecting AM(MW, LW), FM1 or FM2 band and the appropriate station button.

8. AUDIO Mode select Button

Pressing the AUDIO Mode select button changes the BASS, MIDDLE, TREBLE, FADER and BALANCE mode. The mode selected is shown on the display.

After selecting the each mode, rotate the TUNE knob clockwise or counterclockwise.

⚠ CAUTION

- ***Do not place beverages close to the audio system. The audio system mechanism may be damaged if you spill them.***
- ***Do not strike or allow anything to impact the audio system, damage to the system mechanisms could occur.***

COMPACT DISC PLAYER OPERATION (M445MP3) (IF EQUIPPED)

1. CD/AUX Select Button
2. CD EJECT Button
3. TRACK UP/DOWN Button
4. FF/REW Button
5. EQ (Equalizer) Button
6. CD SCAN Button
7. MARK (Bookmark) Button
8. RPT (Repeat) Button
9. RDM (Random) Button
10. FILE SEARCH Knob (TUNE Select Knob)
11. FLDR (Folder Search) Button

TQ445MP3

1. CD/AUX Select Button

- Insert the CD with the label facing upward.
- Insert the CD to start CD playback, during radio operation.
- When a disc is in the CD deck, if you press the CD button the CD player will begin playing even if the radio player is being used.
- The CD player can be used when the ignition switch is in either the “ON” or “ACC” position.
- Push the CD button to start CD playback without pushing Power ON-OFF control knob. (Only when a CD is in the deck.)
- If you press this button you can change to AUX mode.
- AUX mode is available only when AUX jack is plugged in and change back to last mode if you pull it out.

2. CD EJECT Button

- When the EJECT button is pressed with a CD loaded, the CD will eject.
- To eject all of the discs, press this button for one second or more.

✻ NOTICE

- **Do not stick paper or tape etc., on the label side or the recording side of any discs, as it may cause a malfunction.**
- **The unit cannot play a CD-R(Recordable CD) and CD-RW(Rewritable CD) that is not finalized. Please refer to the manual of CD-R/CD-RW recoder or CD-R/CD-RW software for more information on finalization process.**
- **Depending on the recording status, some CD-Rs/CD-RWs may not be played on this unit.**

3. TRACK UP/DOWN Button

- The desired track on the disc currently being played can be selected using the track number.
- Press ∧ button once to skip forward to the beginning of the next track.

  Press ∨ within a second after playback begins to quickly move backward through a CD.

  If you press ∨ after more than a second, it will take you to the beginning of the track you are now listening to.

4. FF/REW Button

If you want to fast forward or reverse through the compact disc track, push and hold the FF or REW button.

When you release the button, the compact disc player will resume playing.

5. EQ (Equalizer) Button

Press the EQ button to select the CLASSIC, POP, JAZZ, ROCK and DEFEAT MODE for the desired tone quality. Each press of the button changes the display as follows;

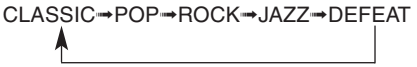

6. CD SCAN Button

- Press the CD SCAN button to playback the first 10 seconds of each track.
- Press the CD SCAN button again within 10 sec. when you have reached the desired track.
- To playback the first 10 seconds of each track in the selected folder, Press the CD SCAN button within a second. (MP3 CD only)

7. MARK (Bookmark) Button

When the CD player unit is operating, the desired track on the disc can be bookmarked by using the MARK button.

- Press the MARK button for more than one second to bookmark the desired track. "M" will be displayed on the LCD and "MEMORY NO." will display for approximately five seconds with a beep sound. To play the bookmarked tracks, press the MARK button within one second and select the bookmarked track to play.
- To erase a bookmarked track, press the MARK button for more than one second. This will erase the bookmark with a beep sound.

If you want to delete all tracks stored on Mark Memory, press FILE SEARCH knob in the Mark Play mode for more than one second. You will hear a beep sound and all tracks will be deleted from Mark Memory with "MARK DELETE ALL" displayed on the LCD.

✻ NOTICE

Tracks stored on Mark Memory will be automatically erased after you eject CDs that contain those tracks.

8. RPT (Repeat) Button

- To repeat the track you are currently listening to, press the RPT button. To cancel, press it again. If it is pressed for more than one second, it will repeat all tracks within the currently played CD.
- To repeat the music within currently played folder, press the RPT button for more than one second. Then it will repeat in sequential order within the currently played folder. To cancel, press it again. (MP3 CD only)
- If you do not release RPT operation when the track ends, it will automatically be replayed. This process will continue until you push the button again.

9. RDM (Random) Button

- To listen to the music in random order, press the RDM Button with a beep sound for more than one second. To cancel, press it again.
- To listen to the music within the currently played folder in random order, press the RDM Button within one second. To cancel, press it again within one second. If it is pressed for more than one second, it will be played in random order within currently played CD (MP3 CD only).

10. FILE SEARCH Knob (TUNE Select Knob)

- You can move through the track by turning the FILE SEARCH knob clockwise or counterclockwise.
- After moving through the desired file, press the FILE SEARCH knob to playback in the selected file.
- If you do not press the FILE SEARCH knob within five seconds, the file searching function will be released.

11. FLDR (FOLDER Search) Button

- You can move through the folder by pushing the FLDR button to up (∧) and down (∨).
- After moving the desired folder, press the FILE SEARCH knob to play back in the selected folder. If you do not press the FILE SEARCH knob within 5 seconds, the folder searching function will be released. It is not operated in a single folder.

✻ NOTICE

- When using a portable audio device connected to power outlet, noise may occur during playback.
  If this happens, use the original power source of the portable audio device (e.g., batteries).
- To assure proper operation of the unit, keep the vehicle interior temperature within a normal range by using the vehicle's air conditioning or heating system.
- When replacing the fuse, replace it with a fuse having the correct capacity.
- All stored bookmarks are all erased when the car battery is disconnected or power to the vehicle is lost. If this occurs, the bookmarks will have to be reset.
- Do not add any oil to the rotating parts. Keep magnets, screwdrivers and other metallic objects away from the tape mechanism and head.

⚠ CAUTION

- *Do not insert warped or poor quality discs into the CD player as damage to the unit may occur.*
- *Do not insert anything like coins into the player slot as damage to the unit may occur.*
- *Do not place beverages close to the audio system. The playback mechanism may be damaged if you spill them.*
- *Do not strike or allow anything to impact the audio system, damage to the system mechanisms could occur.*
- *Off-road or rough surface driving may cause the compact disc to skip. Do not use the compact disc when driving in such conditions as damage to the compact disc face could occur.*
- *Do not attempt to grab or pull the compact disc out while the disc is being pulled into the audio unit by the self-loading mechanism. Damage to the audio unit and compact disc could occur.*
- *This equipment is designed to be used only in a 12 volt DC battery system with negative ground.*
- *This unit is made of precision parts. Do not attempt to disassemble or adjust any parts.*
- *When driving your vehicle, be sure to keep the volume of the unit set low enough to allow you to hear sounds coming from the outside.*
- *Do not expose this equipment (including the speakers and tape) to water or excessive moisture.*
- *Avoid using recorded compact discs in your audio unit. Original compact discs are recommended.*
- *The unit is not sure of playing CD-RW (Rewritable).*
- *When using the EQ function, turn off the EQ function of the device on the AUX input.*
- *When no device is connected to the AUX cable, please pull out the cable from the JACK on the car. (AUX MODE is operational and noise may heard in the AUX MODE.)*

RADIO, SET UP, VOLUME, AUDIO CONTROL

■ PA710 (GENERAL)

■ PA710R (EUROPE)

1. Power ON/OFF Button & Volume Control Knob
2. FM Button
3. AM Button
4. SEEK Button
5. Preset Button
6. AST (AUTO STORE) Button
7. TUNE & Audio Control Button
8. TA Button
9. PTY (FLDR) Button
10. FM/AM Button

TQ_PA710_RADIO / TQ_PA710R_RADIO

Using RADIO, SETUP, VOLUME and AUDIO CONTROL

1. Power ON/OFF Button & Volume Control Button

Turns on/off the set when the IGNITION SWITCH is on ACC or ON. If the button is turned to the right, it increases the volume and left,decreases the volume.

- Press this button to turn the audio system ON or OFF. (EUROPE MODEL ONLY)
- Depending on the model if the ignition switch is not on ACC or ON position. The “Battery Discharge” warning appears on LCD after 10 seconds of power-up, and automatically turns off after 1 hours of operation.
- Adjusts the volume of the car audio system. Rotate clockwise to increase the volume or counterclockwise to decrease.

2. FM Button

Turns to FM mode and toggles FM1and FM2 when the button is pressed each time.

3. AM Button

Pressing the [AM] button selects the AM band. AM Mode is displayed on the LCD.

4. SEEK Button

- When the [SEEK ∧] button is pressed, it increases the band frequency to automatically select a channel. Stops at the previous frequency if no channel is found.
- When the [TRACK ∨] button is pressed, it reduces the band frequency to automatically select a channel. Stops at the previous frequency if no channel is found.

5. Preset Button

Push [1]~[6] buttons less than 0.8 second to play the channel saved in each button. Push Preset button for 0.8 second or longer to save current channel to the respective button with a beep.

6. AST (AUTO STORE) Button

When the button is pressed, it automatically selects and saves channels with high reception rate to PRESET buttons [1]~[6] and plays the channel saved in PRESET1. If no channel is saved after AST, it will play the previous channel.

7. TUNE & Audio Control Button

Manual Channel Selection knob

Turn this control while listening to a radio channel to manually adjust frequency. Turn clockwise to increase frequency and counterclockwise to reduce frequency.

SETUP Button

• GENERAL MODEL

Press this button to turn to the SCROLL adjustment mode. If no action is taken for 5 seconds after pressing the button, it will return to the play mode. (After entering SETUP mode, PUSH functions of the [TUNE] button to adjust SCROLL.)

• EUROPE MODEL

Press this button to turn to the RDS option, SCROLL adjustment mode. If no action is taken for 5 seconds after pressing the button, it will return to the play mode.

(After entering SETUP mode, move between items using the left, right and PUSH functions of the [TUNE] button.) The setup item changes from SCROLL ➟ SDVC ➟ RDS ➟ RETURN ➟ AUDIO ➟ P.Bass

Sound Quality Control Knob

Pressing the button changes the AUDIO mode. The mode selected is shown on the display. After selecting each mode, rotate the Audio control knob clockwise or counterclockwise.

• BASS Control

To increase the BASS, rotate the knob clockwise, while to decrease the BASS, rotate the knob counterclockwise.

• MIDDLE Control

To increase the MIDDLE, rotate the knob clockwise, while to decrease the MIDDLE, rotate the knob counterclockwise.

• TREBLE Control

To increase the TREBLE, rotate the knob clockwise, while to decrease the TREBLE, rotate the knob counterclockwise.

• FADER Control

Turn the control knob clockwise to emphasize rear speaker sound (front speaker sound will be attenuated). When the control knob is turned counterclockwise, front speaker sound will be emphasized (rear speaker sound will be attenuated).

• BALANCE Control

Rotate the knob clockwise to emphasize right speaker sound (left speaker sound will be attenuated). When the control knob is turned counter clockwise, left speaker sound will be emphasized (right speaker sound will be attenuated).

8. TA Button

In FM, CD, AUX mode, turns on/off the reception of TA channels of RDS.

9. PTY (FLDR) Button

- Moves [FLDR ∨] button when searching PTY in RDS Broadcasting Program Type selection.
- Moves [PTY ∧] button when searching PTY in RDS Broadcasting Program Type selection.

10. FM/AM Button

Turns to FM or AM mode, and toggles in the order of FM1 ➟ FM2 ➟ FMA ➟ AM ➟ AMA ➟ FM1... when the button is pressed each time.

CDP, AUX

■ PA710 (GENERAL)

■ PA710R (EUROPE)

1. CD Slot
2. CD Eject Button
3. CD/AUX Button
4. TRACK Button
5. Fast Button
6. RANDOM Button
7. REPEAT Button
8. CD Indicator
9. SCAN Button
10. INFO Button
11. SEARCH Knob & ENTER Button
12. PTY (FLDR) Button

TQ_PA710_CD / TQ_PA710R_CD

Using CD Player

1. CD Slot

Insert CD with printed side upward and gently push in. When the ignition switch is on ACC or ON and power is off, power is automatically turned on if the CD is loaded. This CDP supports only 12cm CD. If a VCD, Data CD are loaded, "Reading Error" message will appear and CD will be ejected.

2. CD Eject Button

Push ⏏ button for less than 0.8 second to eject the CD during CD playback.
This button is enabled when ignition switch is off.

3. CD/AUX Button

If the auxiliary device is connected, it switches to the AUX mode from the other mode to play the sound from the auxiliary player. If the CD is loaded, turns to CD mode, and if a device is connected to AUX then it toggles. CD ➡ AUX ➡ CD... when the button is pressed each time. (It will not turn to AUX if the auxiliary device is not connected)
If no CD and auxiliary device is not connected, it displays "No Media" for 3 seconds and returns to the previous mode.

4. TRACK Button

- Push [TRACK ∨] button for less than 0.8 second to play from the beginning of current song.
- Push [TRACK ∨] button for less than 0.8 second and press again within 1 seconds to play the previous song.
- Push [SEEK ∧] button for less than 0.8 second to play the next song.

5. Fast Button

- Push [FF] button for 0.8 second or longer to initiate high speed sound search of current song.
- Push [REW] button for 0.8 second or longer to initiate reverse direction high speed sound search of current song.

6. RANDOM Button

Press this button for less than 0.8 second to activate ‘RDM’ mode and more than 0.8 second to activate ‘ALL RDM’ mode.

- RDM : Only files/tracks in a folder/disc are played back in a random sequence.
- ALL RDM (MP3/WMA Only) : All files in a disc are played back in the random sequence.

7. REPEAT Button

Press this button for less than 0.8 second to activate ‘RPT’ mode and more than 0.8 second to activate ‘FLD RPT’ mode.

- RPT : Only a track(file) is repeatedly played back.
- FLD RPT (MP3/WMA Only) : Only files in a folder are repeatedly played back.

8. CD Indicator

When the ignition switch is in ACC or ON and if the CD is loaded, this indicator is lighted. If the CD is ejected the icon is turned off.

9. SCAN Button

Plays first 10 seconds of each song in the DISC. To cancel the mode, press the button once again.

10. INFO Button

Displays the information of the current CD TRACK (FILE) as below when the button is pressed each time.

- CDDA : DISC TITLE ➟ DISC ARTIST ➟ TRACK TITLE ➟ TRACK ARTIST ➟ TOTAL TRACK ➟ DISC TITLE...
- MP3/WMA : FILE NAME ➟ TITLE ➟ ARTIST ➟ ALBUM ➟ FOLDER NAME ➟ TOTAL FILE ➟ FILE NAME... (not displayed if the information is not available on the DISC.)

11. SEARCH Knob & ENTER Button

Turn this button clockwise to display the songs next to the currently played song. Turn the button counterclockwise to display the songs before the currently played song. Press the button to skip and play the selected song.

12. PTY (FLDR) Button

- Moves [FLDR ∨] button child folder of the current folder and displays the first song in the folder. Press TUNE/ENTER knob to move to the folder displayed. It will play the first song in the folder.
- Moves [PTY ∧], [FLDR ∧] button parent folder and displays the first song in the folder.
  Press TUNE/ENTER knob to move to the folder displayed.

USB

■ PA710 (GENERAL)

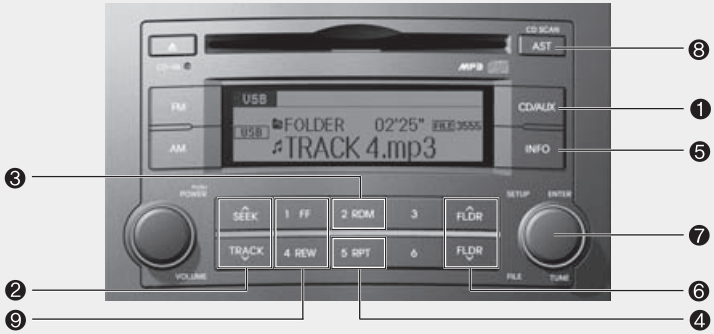

■ PA710R (EUROPE)

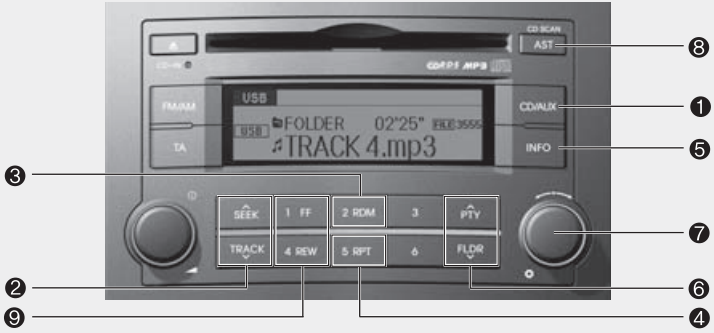

1. USB Button
2. TRACK Button
3. RANDOM Button
4. REPEAT Button
5. INFO Button
6. PTY (FLDR) Button
7. SEARCH Knob & ENTER Button
8. SCAN Button
9. Fast Button

TQ_PA710_USB / TQ_PA710R_USB

Using USB device

1. USB Button

If USB is connected, it switches to the USB mode from the other mode to play the song files stored in the USB.

If no CD and auxiliary device is not connected, it displays “No Media” for 3 seconds and returns to the previous mode.

2. TRACK Button

- Press the [TRACK ∨] button for less than 0.8 second to play from the beginning of the song currently played. Press the button for less than 0.8 second and press it again within 1 seconds to move and play the previous track.
- Press the [SEEK ∧] button for less than 0.8 second to move to the next track.

3. RANDOM Button

Press this button for less than 0.8 second to activate ‘RDM’ mode and more than 0.8 second to activate ‘ALL RDM’ mode.

- RDM : Only files in a folder are played back in a random sequence.
- ALLRDM : All files in a USB memory are played back in the random sequence.

4. REPEAT Button

Press this button for less than 0.8 second to activate ‘RPT’ mode and more than 0.8 second to activate ‘FLD RPT’ mode.

- RPT : Only a file is repeatedly played back.
- FLD RPT : Only files in a folder are repeatedly played back.

5. INFO Button

Displays the information of the file currently played in the order of FILE NAME ➟ TITLE ➟ ARTIST ➟ ALBUM ➟ FOLDER ➟ TOTAL FILE ➟ NORMAL DISPLAY ➟ FILE NAME... (Displays no information if the file has no song information.)

6. PTY (FLDR) Button

- Moves [FLDR ∨] button sub folder of the current folder and displays the first song in the folder.

  Press TUNE/ENTER knob to move to the folder displayed. It will play the first song in the folder.
- Moves [PTY ∧], [FLDR ∧] button main folder and displays the first song in the folder.

  Press TUNE/ENTER knob to move to the folder displayed.

7. SEARCH Knob & ENTER Button

Turn this button clockwise to display the songs next to the currently played song. Turn the button counterclockwise to display the songs before the currently played song.

Press the button to skip and play the selected song.

8. SCAN Button

Plays 10 seconds of each song in the USB device.

Press the button once again to cancel scanning.

9. Fast Button

- Push [FF] button for 0.8 second or longer to initiate high speed sound search of current song.
- Push [REW] button for 0.8 second or longer to initiate reverse direction high speed sound search of current song.

⚠ CAUTION IN USING USB DEVICE

- *To use an external USB device, make sure the device is not connected when starting up the vehicle. Connect the device after starting the vehicle.*
- *If you start the engine when the USB device is connected, it may damage the USB device. (USB flashdrives are very sensitive to electric shock.)*
- *If the engine is started up or turned off while the external USB device is connected, the external USB device may not work.*
- *It may not play inauthentic MP3 or WMA files.*
  1) *It can only play MP3 files with the compression rate between 8Kbps~320Kbps.*
  2) *It can only play WMA music files with the compression rate between 8 Kbps~320 Kbps.*
- *Take precautions for static electricity when connecting or disconnecting the external USB device.*

(Continued)

(Continued)

- *An encoded MP3 PLAYER is not recognizable.*
- *Depending on the condition of the external USB device, the connected external USB device can be unrecognizable.*
- *When the formatted byte/sector setting of External USB devices is not either 512BYTE or 2048BYTE, then the device will not be recognized.*
- *Use only a USB device formatted to FAT 12/16/32.*
- *USB devices without USB I/F authentication may not be recognizable.*
- *Make sure the USB connection terminal does not come in contact with the people or other objects.*
- *If you repeatedly connect and disconnect the USB device in a short period of time, you may cause damage to the device.*
- *You may hear a strange noise when connecting or disconnecting a USB device.*

(Continued)

(Continued)

- *If you disconnect a external USB device during playback in USB mode, the external USB device can be damaged or may malfunction. Therefore, disconnect the external USB device when the audio is turned off or in another mode (e.g, Radio or CD).*
- *Depending on the type and capacity of the external USB device or the type of files stored on the device there may be a delay in the recognition of the device. This is not an indicator of trouble.*
- *Do not use the USB device for purpose other than playing music files.*
- *Use of USB accessories such as recharges or heaters using USB I/F may lower performance or cause trouble.*

(Continued)

(Continued)

- *If you use devices such as a USB hub purchased separately, the vehicle's audio system may not recognize the USB device. In that case, connect the USB device directly to the multimedia terminal of the vehicle.*
- *If USB device is divided by logical drives, only the music files on the highest-priority drive are recognized by car audio.*
- *Devices such as MP3 players, cellular phones and digital cameras may not be compatible with a standard USB I/F.*
- *Some non-standard USB devices (METAL COVER TYPE USB) can be unrecognizable.*
- *Some USB flash memory readers (such as CF, SD, microSD, etc.) or external-HDD type devices can be unrecognizable.*
- *Music files protected by DRM (DIGITAL RIGHTS MANAGEMENT) are not recognizable.*

(Continued)

(Continued)

- *The data in the USB memory may be lost while using this audio. Always back up important data on a personal storage device.*
- *Please avoid using USB memory products which can be used as key chains or cellular phone accessories as they could cause damage to the USB jack. Please make certain only to use plug type connector products as shown below.*

iPod®

■ PA710 (GENERAL)

1. iPod Button
2. TRACK Button
3. RANDOM Button
4. REPEAT Button
5. INFO Button
6. CATEGORY Button
7. SEARCH Knob & ENTER Button
8. Fast Button

■ PA710R (EUROPE)

❊ iPod® is a trademark of Apple Inc.

TQ_PA710_iPod / TQ_PA710R_iPod

Using iPod®

When the iPod is connected, the 'iPod' icon will be displayed on the top left corner of the display screen.

1. iPod Button

If iPod is connected, it switches to the iPod mode from the CD mode to play the song files stored in the iPod. If no CD and auxiliary device is not connected, it displays "No Media" for 3 seconds and returns to the previous mode.

2. TRACK Button

- Press the [TRACK ∨] button for less than 0.8 second to play from the beginning of the song currently played. Press the button for less than 0.8 second and press it again within 1 seconds to move and play the previous track.
- Press the [SEEK ∧] button for less than 0.8 second to move to the next track.

3. RANDOM Button

Press the button for less than 0.8 second to activate or deactivate the random playback of the songs within the current category. Press the button for longer than 0.8 second to randomly play all songs in the entire album of the iPod.
Press the button once again to cancel the mode.

4. REPEAT Button

Repeats the song currently played.

5. INFO Button

Displays the information of the file currently played in the order of TITLE ➟ ARTIST ➟ ALBUM ➟ NORMAL DISPLAY ➟ TITLE ➟ ARTIST... (Displays no information if the file has no song information.)

6. CATEGORY Button

Moves to the upper category from currently played category of the iPod.
To move to the category displayed, press SEARCH/ENTER Button. You will be able to search through the lower category of the selected category.
The order of iPod's category is SONG, ALBUMS, ARTISTS, GENRES, and iPod.

7. SEARCH Knob & ENTER Button

When you turn the button clockwise, it will display the songs (category) next to the song currently played (category in the same level).

Also, when you turn the button counterclockwise, it will display the songs (category) before the song currently played (category in the same level).

If you want to listen to the song displayed in the song category, press the button, then it will skip to the selected song and play.

8. Fast Button

- Push [FF] button for 0.8 second or longer to initiate high speed sound search of current song.
- Push [REW] button for 0.8 second or longer to initiate reverse direction high speed sound search of current song.

✻ NOTICE FOR USING THE iPod® DEVICE

- Some iPod models might not support the communication protocol and the files will not be played.
  Supported iPod models:
  - iPod Mini
  - iPod 4th (Photo) ~ 6th (Classic) generation
  - iPod Nano 1st~4th generation
  - iPod Touch 1st~2nd generation
- The order of search or playback of songs in the iPod can be different from the order searched in the audio system.
- If the iPod crashes due to its own malfunction, reset the iPod. (Reset: Refer to iPod manual)
- An iPod may not operate normally on low battery.
- Some iPod devices, such as the iPhone, can be connected through the *Bluetooth*® Wireless Technology interface. The device must have audio *Bluetooth*® Wireless Technology capability (such as for stereo headphone *Bluetooth*® Wireless Technology). The device can play, but it will not be controlled by the audio system.

⚠ CAUTION IN USING THE iPod® DEVICE

- *The HYUNDAI iPod Power Cable is needed in order to operate iPod with the audio buttons on the audio system. The USB cable provided by Apple may cause malfunction and should not be used for HYUNDAI vehicles.*

  ✻ *The HYUNDAI iPod Power Cable may be purchased through your HYUNDAI Dealer.*
- *When connecting the device with the iPod Power Cable, insert the connector to the multimedia socket completely. If not inserted completely, communications between iPod and audio may be interrupted.*
- *When adjusting the sound effects of the iPod and the audio system, the sound effects of both may devices will overlap and might reduce or distort the quality of the sound.*

(Continued)

(Continued)

- *Deactivate (turn off) the equalizer function of an iPod when adjusting the audio system's volume, and turn off the equalizer of the audio system when using the equalizer of an iPod.*
- *When the iPod cable is connected, the system can be switched to the AUX mode even without the iPod device and may cause noise. Disconnect the iPod cable when you are not using the iPod device.*
- *When not using iPod with car audio, detach the iPod cable from iPod. Otherwise, the iPod may remain in accessory mode, and may not work properly.*

RADIO, VOLUME, AUDIO CONTROL (H800)

1. FM/AM Button
2. POWER Button & VOLUME Knob
3. SEEK Button
4. Preset Buttons
5. BSM Button
6. TUNE & AUDIO Control Knob

RADIO, SET UP, VOLUME CONTROL

1. FM/AM Button

Pressing the [FM/AM] button selects the FM/AM band and toggles in the order of FM1 ➡ FM2 ➡ AM ➡ ... ➡ FM1... when the button is pressed each time. FM/AM Mode is displayed on the LCD.

2. POWER Button & Volume Knob

Turns the set on/off when the IGNITION SWITCH is on ACC or ON.

If the button is turned to the right, it increases the volume and left, decreases the volume.

3. SEEK Button

- When the [SEEK ∧] button is pressed, it increases the band frequency to automatically select a channel. Stops at the previous frequency if no channel is found.
- When the [TRACK ∨] button is pressed, it reduces the band frequency to automatically select a channel. Stops at the previous frequency if no channel is found.

4. Preset Buttons

Push [1]~[6] buttons less than 0.8 second to play the channel saved in each button. Push Preset button for 0.8 second or longer to save current channel to the respective button with a beep.

5. BSM Button

When the button is pressed, it automatically selects and saves channels with high reception rate to [PRESET] buttons [1]~[6] and plays the channel saved in PRESET1. If no channel is saved after BSM, it will play the previous channel.

6. TUNE & AUDIO Control Knob

Turn this control while listening to a radio channel to manually adjust frequency. Turn clockwise to increase frequency and counterclockwise to reduce frequency.

Pressing the button changes the BASS, TREBLE, FADER and BALANCE TUNE mode. The mode selected is shown on the display.

After selecting each mode, rotate the Audio control knob clockwise or counterclockwise.

BASS Control

To increase the BASS, rotate the knob clockwise, while to decrease the BASS, rotate the knob counterclockwise.

TREBLE Control

To increase the TREBLE, rotate the knob clockwise, while to decrease the TREBLE, rotate the knob counterclockwise.

FADER Control

Turn the control knob clockwise to emphasize rear speaker sound (front speaker sound will be attenuated).

When the control knob is turned counterclockwise, front speaker sound will be emphasized (rear speaker sound will be attenuated).

BALANCE Control

Rotate the knob clockwise to emphasize right speaker sound (left speaker sound will be attenuated). When the control knob is turned counter clockwise, left speaker sound will be emphasized (right speaker sound will be attenuated).

USING USB/AUX (H800)

1. USB Button
2. TRACK Button
3. FF (FAST FORWARD) Button
4. REW (REWIND) Button
5. RPT (REPEAT) Button
6. RDM (RANDOM) Button
7. FLDR (FOLDER) Button
8. SCAN Button
9. INFO Button
10. TUNE Knob & ENTER Button

USING USB/AUX

1. USB Button

If USB/AUX is connected, it switches to the USB/AUX mode from the other mode to play the song files stored in the USB.
If no USB and auxiliary device is connected, it displays "NO Media" for 3 seconds and returns to the previous mode.

❋ AUX Button

If the auxiliary device is connected, it turns to AUX mode from the other mode to play the sound from the auxiliary player. If no auxiliary device is connected, it displays "NO Media" for 3 seconds and returns to the previous mode.

2. TRACK Button

- Press the [TRACK ∨] button for less than 0.8 second to play from the beginning of the song currently played. Press the button for less than 0.8 second and press it again within 1 second to move and play the previous track.
- Press the [SEEK ∧] button for less than 0.8 second to move to the next track.

3. FF (FAST FORWORD) Button

Press the button for 0.8 second or longer to play the song in forward direction in fast speed.

4. REW (REWIND) Button

Press the button for 0.8 second or longer to play the song in reverse direction in fast speed.

5. RPT (REPEAT) Button

Press this button for less than 0.8 second to activate 'RPT' mode and more than 0.8 second to activate 'FLD RPT' mode.

- RPT : Only a file is repeatedly played back.
- FLD RPT : Only files in a folder are repeatedly played back.

6. RDM (RANDOM) Button

Press this button for less than 0.8 second to activate 'RDM' mode and more than 0.8 second to activate 'ALL RDM' mode.

- RDM : Only files in a folder are played back in a random sequence.
- ALL RDM : All files in a USB memory are played back in the random sequence.

7. FLDR (FOLDER) Button

- Moves [FLDR ∨] button sub folder of the current folder and displays the first song in the folder.
  Press TUNE/ENTER knob to move to the folder displayed. It will play the first song in the folder.
- Moves [FLDR ∧] button main folder and displays the first song in the folder. Press TUNE/ENTER knob to move to the folder displayed.

8. SCAN Button

Plays 10 seconds of each song in the USB device.
Press the button once again to cancel scanning.

9. INFO Button

Displays the information of the file currently played in the order of FILE NAME ➟ TITLE ➟ ARTIST ➟ ALBUM ➟ FOLDER ➟ TOTAL FILE ➟ NORMAL DISPLAY ➟ FILE NAME... (Displays no information if the file has no song information.)

10. TUNE Knob & ENTER Button

Turn this button clockwise to display the songs next to the currently played song. Turn the button counterclockwise to display the songs before the currently played song.
Press the button to skip and play the selected song.

⚠ CAUTION IN USING USB DEVICE

- *To use an external USB device, make sure the device is not connected when starting up the vehicle. Connect the device after starting up.*
- *If you start the engine when the USB device is connected, it may damage the USB device. (USB flashdrives are very sensitive to electric shock.)*
- *If the engine is started up or turned off while the external USB device is connected, the external USB device may not work.*
- *It may not play inauthentic MP3 or WMA files.*
  1) *It can only play MP3 files with the compression rate between 8Kbps~320Kbps.*
  2) *It can only play WMA music files with the compression rate between 8Kbps~320Kbps.*
- *Take precautions for static electricity when connecting or disconnecting the external USB device.*

(Continued)

(Continued)

- *An encoded MP3 PLAYER is not recognizable.*
- *Depending on the condition of the external USB device, the connected external USB device can be unrecognizable.*
- *When the formatted byte/sector setting of External USB devices is not either 512BYTE or 2048BYTE, then the device will not be recognized.*
- *Use only a USB device formatted to FAT 12/16/32.*
- *USB devices without USB I/F authentication may not be recognizable.*
- *Make sure the USB connection terminal does not come in contact with the human body or other objects.*
- *If you repeatedly connecting or disconnecting the USB device in a short period of time, it may breakthe device.*
- *You may hear a noise when connecting or disconnecting a USB device.*

(Continued)

(Continued)

- *If you disconnect the external USB device during playback in USB mode, the external USB device can be damaged or may malfunction. Therefore, disconnect the external USB device when the audio is turned off or in another mode. (e.g, Radio or AUX)*
- *Depending on the type and capacity of the external USB device or the type of the files stored in the device, there is a difference in the time taken for recognition of the device.*
- *Do not use the USB device for purposes other than playing music files.*
- *Use of USB accessories such as rechargers or heaters using USB I/F may lower performance or cause trouble.*
- *If you use devices such as a USB hub purchased separately, the vehicle's audio system may not recognize the USB device. In that case, connect the USB device directly to the multimedia terminal of the vehicle.*

(Continued)

(Continued)

- *If the USB device is divided by logical drives, only the music files on the highest-priority drive are recognized by car audio.*
- *Devices such as MP3 Player/ Cellular phone/Digital camera can be unrecognizable by standard USB I/F can be unrecognizable.*
- *Some non-standard USB devices (METAL COVER TYPE USB) can be unrecognizable.*
- *Some USB flash memory readers (such as CF, SD, microSD, etc.) or external-HDD type devices can be unrecognizable.*
- *Music files protected by DRM (DIGITAL RIGHTS MANAGEMENT) are not recognizalbe.*
- *The data in the USB memory may be lost while using this audio. Always back up important data on a personal storage device.*

(Continued)

(Continued)

- *Please avoid using USB memory products which can be used as key chains or cellular phone accessories as they could cause damage to the USB jack. Please make certain only to use plug type connector products as shown below.*

USING iPod® (H800)

1. iPod Button
2. TRACK Button
3. RDM(RANDOM) Button
4. RPT(REPEAT) Button
5. MENU Button
6. INFO Button
7. TUNE Knob & ENTER Button

❊ iPod® is a trademark of Apple Inc.

USING iPod®

When the iPod is connected, the 'iPod' icon will be displayed on the top left corner of the display screen.

1. iPod Button

If iPod is connected, it switches to the iPod mode from the Radio mode to play the song files stored in the iPod. If iPod is not connected, it displays "NO Media" for 3 seconds and returns to the previous mode.

2. TRACK Button

- Press the [TRACK ∨] button for less than 0.8 second to play from the beginning of the song currently played. Press the button for less than 0.8 second and press it again within 1 second to move and play the previous track. Press the button for 0.8 second or longer to play the song in reverse direction in fast speed.
- Press the [SEEK ∧] button for less than 0.8 second to move to the next track. Press the button for 0.8 second or longer to play the song in forward direction in fast speed.

3. RDM (RANDOM) Button

Press the button for less than 0.8 second to activate or deactivate the random playback of the songs within the current category. Press the button for longer than 0.8 second to randomly play all songs in the entire album of the iPod.

Press the button once again to cancel the mode.

4. RPT (REPEAT) Button

Repeats the song currently played.

5. MENU Button

Moves to the upper category from currently played category of the iPod.

To move to (play) the category (song) displayed, MENU (preset6) You will be able to search through the lower category of the selected category.

The order of iPod's category is SONG, ALBUMS, ARTISTS, GENRES, and iPod.

6. INFO Button

Displays the information of the file currently played in the order of TITLE ➡ ARTIST ➡ ALBUM ➡ NORMAL DISPLAY ➡ TITLE ➡... (Displays no information if the file has no song information.)

7. TUNE Knob & ENTER Button

When you turn the button clockwise, it will display the songs (category) next to the song currently played (category in the same level).

Also, when you turn the button counterclockwise, it will display the songs (category) before the song currently played (category in the same level).

If you want to listen to the song displayed in the song category, press the button, then it will skip to the selected song and play.

✻ NOTICE FOR USING THE iPod® DEVICE

- Some iPod models might not support the communication protocol and the files will not be played.
  Supported iPod models:
  - iPod Mini
  - iPod 4th (Photo) ~ 6th (Classic) generation
  - iPod Nano 1st~4th generation
  - iPod Touch 1st~2nd generation
- The order of search or playback of songs in the iPod can be different from the order searched in the audio system.
- If the iPod disabled due to its own malfunction, reset the iPod. (Reset: Refer to iPod manual)
- An iPod may not operate normally on low battery.
- Some iPod devices, such as the iPhone, can be connected through the *Bluetooth®* Wireless Technology interface. The device must have audio *Bluetooth®* Wireless Technology capability (such as for stereo headphone *Bluetooth®* Wireless Technology). The device can play, but it will not be controlled by the audio system.

⚠ CAUTION IN USING THE iPod® DEVICE

- *The HYUNDAI iPod Power Cable is needed in order to operate iPod with the audio buttons on the audio system. The USB cable provided by Apple may cause malfunction and should not be used for HYUNDAI vehicles.*
  ✻ The HYUNDAI iPod Power Cable may be purchased through your HYUNDAI Dealer.
- *When connecting the device with the iPod Power Cable, insert the connector to the multimedia socket completely. If not inserted completely, communications between iPod and audio may be interrupted.*
- *When adjusting the sound effects of the iPod and the audio system, the sound effects of both may devices will overlap and might reduce or distort the quality of the sound.*

(Continued)

(Continued)

- *Deactivate (turn off) the equalizer function of an iPod when adjusting the audio system's volume, and turn off the equalizer of the audio system when using the equalizer of an iPod.*
- *When the iPod cable is connected, the system can be switched to the AUX mode even without the iPod device and may cause noise. Disconnect the iPod cable when you are not using the iPod device.*
- *When not using iPod with car audio, detach the iPod cable from iPod. Otherwise, the iPod may remain in accessory mode, and may not work properly.*

Before driving / 5-3
Key positions / 5-4
Starting the engine / 5-6
Manual transmission / 5-8
Automatic transmission / 5-11
Brake system / 5-18
Locking differential / 5-28
Economical operation / 5-29
Special driving conditions / 5-31
Winter driving / 5-36
Trailer towing (for Europe) / 5-40

Driving your vehicle

5

Vehicle weight / 5-47

E010000AEN

⚠ WARNING - ENGINE EXHAUST CAN BE DANGEROUS!

Engine exhaust fumes can be extremely dangerous. If, at any time, you smell exhaust fumes inside the vehicle, open the windows immediately.

- **Do not inhale exhaust fumes.**
  Exhaust fumes contain carbon monoxide, a colorless, odorless gas that can cause unconsciousness and death by asphyxiation.
- **Be sure the exhaust system does not leak.**
  The exhaust system should be checked whenever the vehicle is raised to change the oil or for any other purpose. If you hear a change in the sound of the exhaust or if you drive over something that strikes the underneath side of the car, have the exhaust system checked as soon as possible by an authorized HYUNDAI dealer.
- **Do not run the engine in an enclosed area.**
  Letting the engine idle in your garage, even with the garage door open, is a hazardous practice. Never run the engine in your garage any longer than it takes to start the engine and back the car out.
- **Avoid idling the engine for prolonged periods with people inside the car.**
  If it is necessary to idle the engine for a prolonged period with people inside the car, be sure to do so only in an open area with the air intake set at "Fresh" and fan operating at one of the higher speeds so fresh air is drawn into the interior.

If you must drive with the tailgate open because you are carrying objects that make this necessary:

1. Close all windows.
2. Open side vents.
3. Set the air intake control at "Fresh", the air flow control at "Floor" or "Face" and the fan at one of the higher speeds.

To assure proper operation of the ventilation system, be sure the ventilation air intakes located just in front of the windshield are kept clear of snow, ice, leaves or other obstructions.

BEFORE DRIVING

E020100AUN

Before entering vehicle

- Be sure that all windows, outside mirror(s), and outside lights are clean.
- Check the condition of the tires.
- Check under the vehicle for any sign of leaks.
- Be sure there are no obstacles behind you if you intend to back up.

E020200BUN

Necessary inspections

Fluid levels, such as engine oil, engine coolant, brake fluid, and washer fluid should be checked on a regular basis, with the exact interval depending on the fluid. Further details are provided in section 7, “Maintenance”.

⚠ WARNING

Driving while distracted can result in a loss of vehicle control, that may lead to an accident, severe personal injury, and death. The driver’s primary responsibility is in the safe and legal operation of a vehicle, and use of any handheld devices, other equipment, or vehicle systems which take the driver’s eyes, attention and focus away from the safe operation of a vehicle or which are not permissible by law should never be used during operation of the vehicle.

E020300AUN

Before starting

- Close and lock all doors.
- Position the seat so that all controls are easily reached.
- Adjust the inside and outside rearview mirrors.
- Be sure that all lights work.
- Check all gauges.
- Check the operation of warning lights when the ignition switch is turned to the ON position.
- Release the parking brake and make sure the brake warning light goes out.

For safe operation, be sure you are familiar with your vehicle and its equipment.

⚠ WARNING

All passengers must be properly belted whenever the vehicle is moving. Refer to “Seat belts” in section 3 for more information on their proper use.

⚠ WARNING

Always check the surrounding areas near your vehicle for people, especially children, before putting a car into D (Drive) or R (Reverse).

⚠ WARNING - Driving under the influence of alcohol or drugs

Drinking and driving is dangerous. Drunk driving is the number one contributor to the highway death toll each year. Even a small amount of alcohol will affect your reflexes, perceptions and judgment. Driving while under the influence of drugs is as dangerous or more dangerous than driving drunk.

You are much more likely to have a serious accident if you drink or take drugs and drive.

If you are drinking or taking drugs, don't drive. Do not ride with a driver who has been drinking or taking drugs. Choose a designated driver or call a cab.

⚠ WARNING

- **When you intend to park or stop the vehicle with the engine on, be careful not to depress the accelerator pedal for a long period of time. It may overheat the engine or exhaust system and cause fire.**
- **When you make a sudden stop or turn the steering wheel rapidly, loose objects may drop on the floor and it could interfere with the operation of the foot pedals, possibly causing an accident. Keep all things in the vehicle safely stored.**
- **If you do not focus on driving, it may cause an accident. Be careful when operating what may disturb driving such as audio or heater. It is the responsibility of the driver to always drive safely.**

KEY POSITIONS

OTQ057001

E030100AEN

Illuminated ignition switch (if equipped)

Whenever a front door is opened, the ignition switch will be illuminated for your convenience, provided the ignition switch is not in the ON position. The light will go off immediately when the ignition switch is turned on or go off after about 30 seconds when the door is closed.

OTQ057002

Ignition switch position

E030201AUN

LOCK

The steering wheel locks to protect against theft. The ignition key can be removed only in the LOCK position. When turning the ignition switch to the LOCK position, push the key inward at the ACC position and turn the key toward the LOCK position.

E030202AUN

ACC (Accessory)

The steering wheel is unlocked and electrical accessories are operative.

✻ NOTICE

If difficulty is experienced in turning the ignition switch to the ACC position, turn the key while turning steering wheel right and left to release the tension.

E030203AUN

ON

The warning lights can be checked before the engine is started. This is the normal running position after the engine is started.

Do not leave the ignition switch ON if the engine is not running to prevent battery discharge.

E030204AUN

START

Turn the ignition switch to the START position to start the engine. The engine will crank until you release the key; then it returns to the ON position. The brake warning lamp can be checked in this position.

E030205AUN

⚠ WARNING - Ignition switch

- **Never turn the ignition switch to LOCK or ACC while the vehicle is moving. This would result in loss of directional control and braking function, which could cause an accident.**
- **The anti-theft steering column lock is not a substitute for the parking brake. Before leaving the driver's seat, always make sure the shift lever is engaged in P (Park) for the automatic transmission and set the parking brake fully and shut the engine off. Unexpected and sudden vehicle movement may occur if these precautions are not taken.**
- **Never reach for the ignition switch, or any other controls through the steering wheel while the vehicle is in motion. The presence of your hand or arm in this area could cause a loss of vehicle control, an accident and serious bodily injury or death.**
- **Do not place any movable objects around the driver's seat as they may move while driving, interfere with the driver and lead to an accident.**

STARTING THE ENGINE

E040000AUN

⚠ WARNING

Always wear appropriate shoes when operating your vehicle. Unsuitable shoes (high heels, ski boots,etc.) may interfere with your ability to use the brake and accelerator pedal, and the clutch (if equipped).

E040100AUN

Starting the gasoline engine

1. Make sure the parking brake is applied.
2. **Manual Transmission** - Depress the clutch pedal fully and shift the transmission into Neutral. Keep the clutch pedal and brake pedal depressed while turning the ignition switch to the start position.

   Automatic Transmission - Place the transmission shift lever in P (Park). Depress the brake pedal fully.

   You can also start the engine when the shift lever is in the N (Neutral) position.
3. Turn the ignition switch to START and hold it there until the engine starts (a maximum of 10 seconds), then release the key.
4. In extremely cold weather (below -18°C / 0°F) or after the vehicle has not been operated for several days, let the engine warm up without depressing the accelerator.

Whether the engine is cold or warm, it should be started ***without depressing the accelerator.***

⚠ CAUTION

If the engine stalls while you are in motion, do not attempt to move the shift lever to the P (Park) position. If traffic and road conditions permit, you may put the shift lever in the N (Neutral) position while the vehicle is still moving and turn the ignition switch to the START position in an attempt to restart the engine.

⚠ CAUTION

Do not engage the starter for more than 10 seconds. If the engine stalls or fails to start, wait 5 to 10 seconds before re-engaging the starter. Improper use of the starter may damage it.

E040101AUN

Starting the diesel engine

To start the diesel engine when the engine is cold, it has to be pre-heated before starting the engine and then have to be warmed up before starting to drive.

1. Make sure the parking brake is applied.
2. **Manual Transmission** - Depress the clutch pedal fully and shift the transmission into Neutral. Keep the clutch pedal and brake pedal depressed while turning the ignition switch to the start position.

   Automatic Transmission - Place the transmission shift lever in P(park). Depress the brake pedal fully.

   You can also start the engine when the shift lever is in the N(neutral) position.

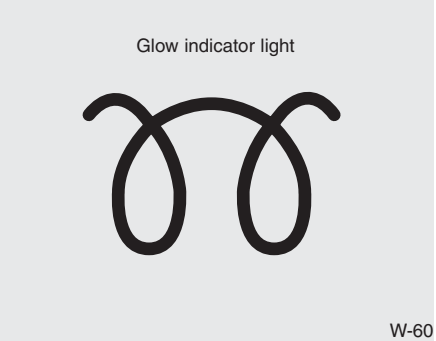

3. Turn the ignition switch to the ON position to pre-heat the engine. Then the glow indicator light will illuminate.
4. If the glow indicator light goes out, turn the ignition switch to the START position and hold it there until the engine starts (a maximum of 10 seconds), then release the key.

✻ NOTICE

If the engine were not started within 10 seconds after the preheating is completed, turn the ignition switch once more to the LOCK position during 10 seconds, and then to the ON position, in order to preheat again.

E040101ATQ

✻ NOTICE - A2.5/A2 2.5 Diesel Engine

If the accelerator is pressed for a long time while standing still, the engine power will be limited to prevent the exhaust parts from overheating.

Starting and stopping the engine for turbocharger intercooler

1. Do not race or accelerate the engine immediately after starting.

   If the engine is cold, idle for several seconds before sufficient lubrication is ensured in the turbocharger unit.
2. After high speed or extended driving, requiring a heavy engine load, idle the engine about 1 minute before turning it off.

   This idle time will allow the turbocharger to cool prior to shutting the engine off.

⚠ CAUTION

Do not turn the engine off immediately after it has been subjected to a heavy load. Doing so may cause severe damage to the engine or turbocharger unit.

MANUAL TRANSMISSION (IF EQUIPPED)

■ Type A

■ Type B

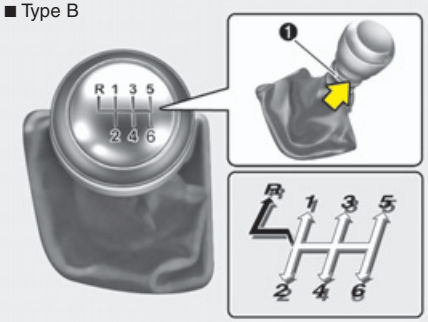

⇨ The shift lever can be moved without pulling the ring (1).

➡ The ring (1) must be pulled up while moving the shift lever.

OTQ057004/OCM050003

E050100CTQ

Manual transmission operation

The manual transmission has 5 (or 6, if equipped) forward gears.
This shift pattern is imprinted on the shift knob. The transmission is fully synchronized in all forward gears so shifting to either a higher or a lower gear is easily accomplished.
Press the clutch pedal down fully while shifting, then release it slowly.
If your vehicle is equipped with an ignition lock switch, the engine will not start when starting the engine without depressing the clutch pedal. (if equipped)
The gearshift lever must be returned to the neutral position before shifting into R (Reverse).
Make sure the vehicle is completely stopped before shifting into R (Reverse).
Never operate the engine with the tachometer (rpm) in the red zone.

⚠ CAUTION

- ***When downshifting from fifth gear to fourth gear, caution should be taken not to inadvertently press the gear shift lever sideways in such a manner that second gear is engaged. Such a drastic downshift may cause the engine speed to increase to the point that the tachometer will enter the red-zone. Such over-revving of the engine may possibly cause engine damage.***
- ***Do not downshift more than 2 gears or downshift the gear when the engine is running at high speed (5,000 RPM or higher). Such a downshifting may damage the engine.***

- During cold weather, shifting may be difficult until the transmission lubricant is warmed up. This is normal and not harmful to the transmission.
- If you've come to a complete stop and it's hard to shift into 1st or R(Reverse), leave the shift lever at N(Neutral) position and release the clutch. Press the clutch pedal back down, and then shift into 1st or R(Reverse) gear position.

⚠ CAUTION

- ***To avoid premature clutch wear and damage, do not drive with your foot resting on the clutch pedal. Also, don't use the clutch to hold the vehicle stopped on an uphill grade, while waiting for a traffic light, etc.***
- ***Do not use the shift lever as a handrest during driving, as this can result in premature wear of the transmission shift forks.***

⚠ WARNING

- **Before leaving the driver's seat, always set the parking brake fully and shut the engine off. Then make sure the transmission is shifted into 1st gear when the vehicle is parked on a level or uphill grade, and shifted into R (Reverse) on a downhill grade. Unexpected and sudden vehicle movement can occur if these precautions are not followed in the order identified.**
- **If your vehicle has a manual transmission not equipped with a ignition lock switch, it may move and cause a serious accident when starting the engine without depressing the clutch pedal while the parking brake is released and the shift lever not in the N(Neutral) position.**

E050101AUN

Using the clutch

The clutch should be pressed all the way to the floor before shifting, then released slowly. The clutch pedal should always be fully released while driving. Do not rest your foot on the clutch pedal while driving. This can cause unnecessary wear. Do not partially engage the clutch to hold the car on an incline. This causes unnecessary wear. Use the foot brake or parking brake to hold the car on an incline. Do not operate the clutch pedal rapidly and repeatedly.

E050102AUN

Downshifting

When you must slow down in heavy traffic or while driving up steep hills, downshift before the engine starts to labor. Downshifting reduces the chance of stalling and gives better acceleration when you again need to increase your speed. When the vehicle is traveling down steep hills, downshifting helps maintain safe speed and prolongs brake life.

E050200AUN

Good driving practices

- Never take the car out of gear and coast down a hill. This is extremely hazardous. Always leave the car in gear.
- Don't "ride" the brakes. This can cause them to overheat and malfunction. Instead, when you are driving down a long hill, shift to a lower gear. When you do this, engine braking will help slow the car.
- Slow down before shifting to a lower gear. This will help avoid over-revving the engine, which can cause damage.
- Slow down when you encounter cross winds. This gives you much better control of your car.
- Be sure the car is completely stopped before you attempt to shift into reverse. The transmission can be damaged if you do not. To shift into reverse, depress the clutch, move the shift lever to neutral, wait 3 seconds, then shift to the reverse position.
- Exercise extreme caution when driving on a slippery surface. Be especially careful when braking, accelerating or shifting gears. On a slippery surface, an abrupt change in vehicle speed can cause the drive wheels to lose traction and the vehicle to go out of control.

⚠ WARNING

- **Always buckle-up! In a collision, an unbelted occupant is significantly more likely to be seriously injured or killed than a properly belted occupant.**
- **Avoid high speeds when cornering or turning.**
- **Do not make quick steering wheel movements, such as sharp lane changes or fast, sharp turns.**
- **The risk of rollover is greatly increased if you lose control of your vehicle at highway speeds.**
- **Loss of control often occurs if two or more wheels drop off the roadway and the driver oversteers to reenter the roadway.**
- **In the event your vehicle leaves the roadway, do not steer sharply. Instead, slow down before pulling back into the travel lanes.**
- **Never exceed posted speed limits.**

AUTOMATIC TRANSMISSION

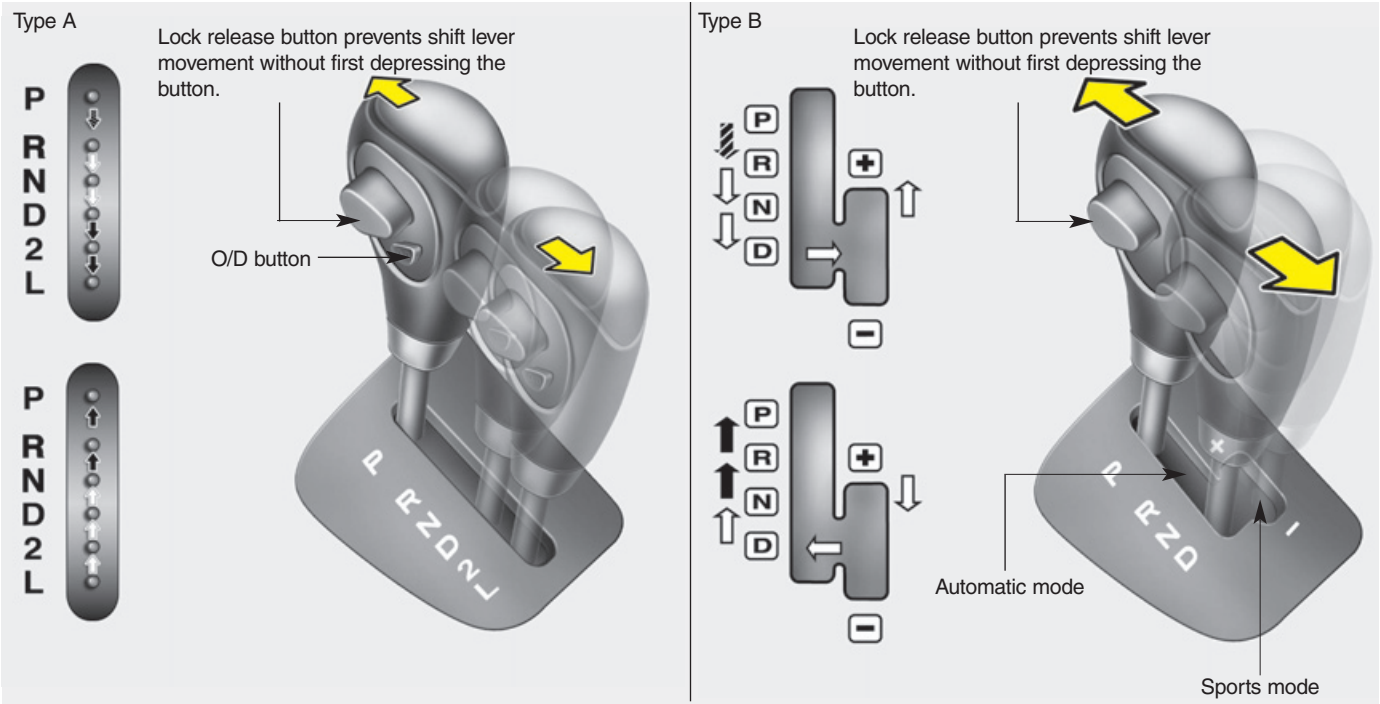

Depress the brake pedal and lock release button when shifting, if your vehicle is equipped with shift lock system

The lock release button must be depressed while moving the shift lever.

The shift lever can be moved without depressing the lock release button.

OTQ057006G/OTQ057006

E060000AEN

E060100ATQ

Automatic transmission operation

The automatic transmission has 5 (or 4) forward speeds and one reverse speed. The individual speeds are selected automatically, depending on the position of the shift lever.

✻ NOTICE

The first few shifts on a new vehicle, if the battery has been disconnected, may be somewhat abrupt. This is a normal condition, and the shifting sequence will adjust after shifts are cycled a few times by the TCM (Transmission Control Module) or PCM (Powertrain Control Module).

For smooth operation, depress the brake pedal when shifting from N (Neutral) to a forward or reverse gear.

⚠ WARNING - Automatic transmission

- **Always check the surrounding areas near your vehicle for people, especially children, before shifting a car into D (Drive) or R (Reverse).**
- **Before leaving the driver's seat, always make sure the shift lever is in the P (Park) position; then set the parking brake fully and shut the engine off. Unexpected and sudden vehicle movement can occur if these precautions are not followed in the order identified.**

⚠ CAUTION

- ***To avoid damage to your transmission, do not accelerate the engine in R (Reverse) or any forward gear position with the brakes on.***
- ***When stopped on an incline, do not hold the vehicle stationary with engine power. Use the service brake or the parking brake.***
- ***Do not shift from N (Neutral) or P (Park) into D (Drive), or R (Reverse) when the engine is above idle speed.***

E060101CTQ

Transmission ranges

The indicator in the instrument cluster displays the shift lever position when the ignition switch is in the ON position.

P (Park)

Always come to a complete stop before shifting into P (Park). This position locks the transmission and prevents the drive wheels from rotating.

⚠ WARNING

- **Shifting into P (Park) while the vehicle is in motion will cause the drive wheels to lock which will cause you to lose control of the vehicle.**
- **Do not use the P (Park) position in place of the parking brake. Always make sure the shift lever is latched in the P (Park) position and set the parking brake fully.**
- **Never leave a child unattended in a vehicle.**

⚠ CAUTION

The transmission may be damaged if you shift into P (Park) while the vehicle is in motion.

R (Reverse)

Use this position to drive the vehicle backward.

⚠ CAUTION

Always come to a complete stop before shifting into or out of R (Reverse); you may damage the transmission if you shift into R while the vehicle is in motion, except as explained in "Rocking the vehicle" in this section.

N (Neutral)

The wheels and transmission are not engaged. The vehicle will roll freely even on the slightest incline unless the parking brake or service brakes are applied.

D (Drive)

This is the normal forward driving position. The transmission will automatically shift through a 5 (or 4)-gear sequence, providing the best fuel economy and power.

For extra power when passing another vehicle or climbing grades, depress the accelerator fully, at which time the transmission will automatically downshift to the next lower gear.

✻ NOTICE

Always come to a complete stop before shifting into D (Drive).

2 (Second Gear, if equipped)

Use 2 (Second Gear) for more power when climbing hills and for increased braking when going down hills. This position also helps reduce wheel spin on slippery surfaces. When the shift lever is placed in 2 (Second Gear), the transmission will automatically shift from first to second gear.

L (Low, if equipped)

Move the shift lever to this position in hard pulling situations and for climbing steep grades.

⚠ CAUTION

Do not exceed the recommended maximum speeds in 2 (Second Gear) or L (Low). Operating the vehicle at speeds above the maximum recommended, for 2 (Second Gear) or L (Low) may cause excessive heat to develop which could result in damage to or failure of the automatic transmission.

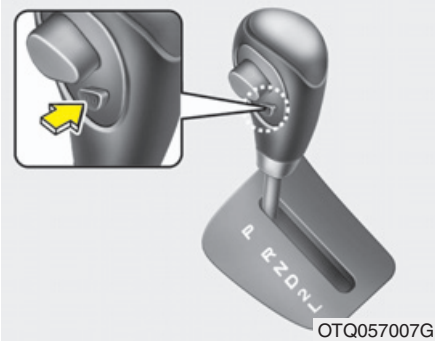

OTQ057007G

O/D (Over Drive) system (if equipped)

Pressing the O/D system button cancels and engages the overdrive system. When the O/D system is cancelled, the O/D OFF indicator illuminates and the transmission gear range is limited to 1st through 3rd.

The transmission will not shift to 4th gear until the O/D system button is pressed again to release the switch.

When driving down a sloping road with the transmission in O/D (4th), you can decrease the vehicle speed without using the brakes by pressing the O/D button.

When the ignition is switched OFF, O/D OFF mode is automatically cancelled.

O/D OFF Indicator

This indicator light illuminates in the instrument panel when the O/D mode is cancelled.

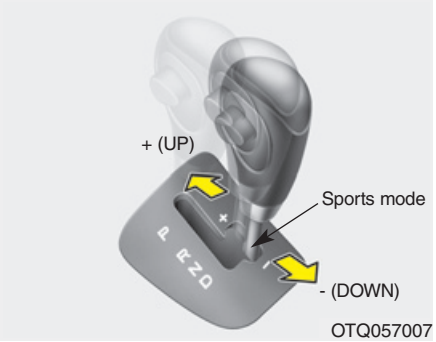

E060102BTQ

Sports mode (if equipped)

Whether the vehicle is stationary or in motion, sports mode is selected by pushing the shift lever from the D (Drive) position into the manual gate. To return to D (Drive) range operation, push the shift lever back into the main gate.

In sports mode, moving the shift lever backwards and forwards will allow you to make gearshifts rapidly. In contrast to a manual transmission, the sports mode allows gearshifts with the accelerator pedal depressed.

Up (+) : Push the lever forward once to shift up one gear.

Down (-) : Pull the lever backwards once to shift down one gear.

✻ NOTICE

- **In sports mode, the driver must execute upshifts in accordance with road conditions, taking care to keep the engine speed below the red zone.**
- **In sports mode, only the 5 forward gears can be selected. To reverse or park the vehicle, move the shift lever to the R (Reverse) or P (Park) position as required.**
- **In sports mode, downshifts are made automatically when the vehicle slows down. When the vehicle stops, 1st gear is automatically selected.**
- **In sports mode, when the engine rpm approaches the red zone shift points are varied to upshift automatically.**
- **To maintain the required levels of vehicle performance and safety, the system may not execute certain gearshifts when the shift lever is operated.**
- **When driving on a slippery road, push the shift lever forward into the +(up) position. This causes the transmission to shift into the 2nd gear which is better for smooth driving on a slippery road. Push the shift lever to the -(down) side to shift back to the 1st gear.**

E060200AEN

Good driving practices

- Never move the gear shift lever from P (Park) or N (Neutral) to any other position with the accelerator pedal depressed.
- Never move the gear shift lever into P (Park) when the vehicle is in motion.
- Be sure the car is completely stopped before you attempt to shift into R (Reverse).
- Never take the car out of gear and coast down a hill. This may be extremely hazardous. Always leave the car in gear when moving.
- Do not "ride" the brakes. This can cause them to overheat and malfunction. Instead, when you are driving down a long hill, shift to a lower gear. When you do this, engine braking will help slow the car.
- Slow down before shifting to a lower gear. Otherwise, the lower gear may not be engaged.
- Always use the parking brake. Do not depend on placing the transmission in P (Park) to keep the car from moving.
- Exercise extreme caution when driving on a slippery surface. Be especially careful when braking, accelerating or shifting gears. On a slippery surface, an abrupt change in vehicle speed can cause the drive wheels to lose traction and the vehicle to go out of control.
- Optimum vehicle performance and economy is obtained by smoothly depressing and releasing the accelerator pedal.

⚠ WARNING

- **Always buckle-up! In a collision, an unbelted occupant is significantly more likely to be seriously injured or killed than a properly belted occupant.**
- **Avoid high speeds when cornering or turning.**
- **Do not make quick steering wheel movements, such as sharp lane changes or fast, sharp turns.**
- **The risk of rollover is greatly increased if you lose control of your vehicle at highway speeds.**

(Continued)

(Continued)

- **Loss of control often occurs if two or more wheels drop off the roadway and the driver over-steers to reenter the roadway.**
- **In the event your vehicle leaves the roadway, do not steer sharply. Instead, slow down before pulling back into the travel lanes.**
- **Never exceed posted speed limits.**

⚠ WARNING

If your vehicle becomes stuck in snow, mud, sand, etc., then you may attempt to rock the vehicle free by moving it forward and backward. Do not attempt this procedure if people or objects are anywhere near the vehicle. During the rocking operation the vehicle may suddenly move forward of backward as it becomes unstuck, causing injury or damage to nearby people or objects.

E060203AUN

Moving up a steep grade from a standing start

To move up a steep grade from a standing start, depress the brake pedal, shift the shift lever to D (Drive). Select the appropriate gear depending on load weight and steepness of the grade, and release the parking brake. Depress the accelerator gradually while releasing the service brakes.

When accelerating from a stop on a steep hill, the vehicle may have a tendency to roll backwards. Shifting the shift lever into 2 (Second Gear) will help prevent the vehicle from rolling backwards.

E060203ATQ

Shift lock system (if equipped)

For your safety, the Automatic Transmission has a shift lock system which prevents shifting the transmission out of P (Park) unless the brake pedal is depressed.

To shift the transmission out of P (Park):

Type A

1. Depress and hold the brake pedal.
2. Depress the lock release button and move the shift lever.

Type B (If the ignition key interlock system is equipped)

1. Depress and hold the brake pedal.
2. Start the engine or turn the ignition to the ON position.
3. Depress the lock release button and move the shift lever.

If the brake pedal is repeatedly depressed and released with the shift lever in the P (Park) position, a chattering sound near the shift lever may be heard. This is a normal condition.

Ignition key interlock system (if equipped)

The ignition key cannot be removed unless the shift lever is in the P (Park) position. If the ignition switch is in any other position, the key cannot be removed.

BRAKE SYSTEM

E070100BUN

Power brakes

Your vehicle has power-assisted brakes that adjust automatically through normal usage.

In the event that the power-assisted brakes lose power because of a stalled engine or some other reason, you can still stop your vehicle by applying greater force to the brake pedal than you normally would. The stopping distance, however, will be longer.

When the engine is not running, the reserve brake power is partially depleted each time the brake pedal is applied. Do not pump the brake pedal when the power assist has been interrupted.

Pump the brake pedal only when necessary to maintain steering control on slippery surfaces.

⚠ WARNING - Brakes

- **Do not drive with your foot resting on the brake pedal. This will create abnormal high brake temperatures, excessive brake lining and pad wear, and increased stopping distances.**
- **When descending a long or steep hill, shift to a lower gear and avoid continuous application of the brakes. Continuous brake application will cause the brakes to overheat and could result in a temporary loss of braking performance.**
- **Wet brakes may impair the vehicle's ability to safely slow down; the vehicle may also pull to one side when the brakes are applied. Applying the brakes lightly will indicate whether they have been affected in this way. Always test your brakes in this fashion after driving through deep water. To dry the brakes, apply them lightly while maintaining a safe forward speed until brake performance returns to normal.**

(Continued)

(Continued)

- **Always, confirm the position of the brake and accelerator pedal before driving. If you do not check the position of the accelerator and brake pedal before driving, you may depress the accelerator instead of the brake pedal. It may cause a serious accident.**

E070101AUN

In the event of brake failure

If service brakes fail to operate while the vehicle is in motion, you can make an emergency stop with the parking brake. The stopping distance, however, will be much greater than normal.

⚠ WARNING - Parking brake

Applying the parking brake while the vehicle is moving at normal speeds can cause a sudden loss of control of the vehicle. If you must use the parking brake to stop the vehicle, use great caution in applying the brake.

E070102AUN

Disc brakes wear indicator

Your vehicle has disc brakes.
When your brake pads are worn and new pads are required, you will hear a high-pitched warning sound from your front brakes or rear brakes (if equipped). You may hear this sound come and go or it may occur whenever you depress the brake pedal.
Please remember that some driving conditions or climates may cause a brake squeal when you first apply (or lightly apply) the brakes. This is normal and does not indicate a problem with your brakes.

⚠ CAUTION

- ***To avoid costly brake repairs, do not continue to drive with worn brake pads.***
- ***Always replace brake pads as complete front or rear axle sets.***

⚠ WARNING - Brake wear

This brake wear warning sound means your vehicle needs service. If you ignore this audible warning, you will eventually lose braking performance, which could lead to a serious accident.

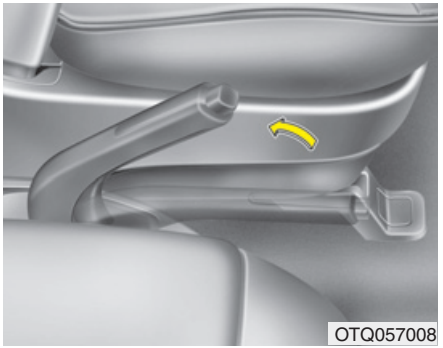

Parking brake

E070201BFD

Applying the parking brake

To engage the parking brake, first apply the foot brake and then without pressing the release button in, pull the parking brake lever up as far as possible. In addition it is recommended that when parking the vehicle on a gradient, the shift lever should be positioned in the appropriate low gear on manual transmission vehicles or in the P (Park) position on automatic transmission vehicles.

⚠ CAUTION

- ***Driving with the parking brake applied will cause excessive brake pad and brake rotor wear.***
- ***Do not operate the parking brake while the vehicle is moving except in an emergency situation. It could damage the vehicle system and make endanger driving safety.***

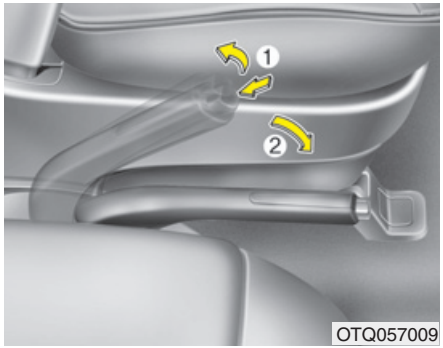

E070202AFD

Releasing the parking brake

To release the parking brake, first apply the foot brake and pull up the parking brake lever slightly. Secondly depress the release button (1) and lower the parking brake lever (2) while holding the button.

⚠ WARNING

- **To prevent unintentional movement when stopped and leaving the vehicle, do not use the gearshift lever in place of the parking brake. Set the parking brake AND make sure the gearshift lever is securely positioned in 1st (First) gear or R (Reverse) for manual transmission equipped vehicles and in P (Park) for automatic transmission equipped vehicles.**
- **Never allow anyone who is unfamiliar with the vehicle to touch the parking brake. If the parking brake is released unintentionally, serious injury may occur.**
- **All vehicles should always have the parking brake fully engaged when parking to avoid inadvertent movement of the car which can injure occupants or pedestrians.**

Check the brake warning light by turning the ignition switch ON (do not start the engine). This light will be illuminated when the parking brake is applied with the ignition switch in the START or ON position.

Before driving, be sure the parking brake is fully released and the brake warning light is off.

If the brake warning light remains on after the parking brake is released while engine is running, there may be a malfunction in the brake system. Immediate attention is necessary.

If at all possible, cease driving the vehicle immediately. If that is not possible, use extreme caution while operating the vehicle and only continue to drive the vehicle until you can reach a safe location or repair shop.

E070300AEN-EE

Anti-lock brake system (ABS) (if equipped)

⚠ WARNING

ABS (or ESP) will not prevent accidents due to improper or dangerous driving maneuvers. Even though vehicle control is improved during emergency braking, always maintain a safe distance between you and objects ahead. Vehicle speeds should always be reduced during extreme road conditions.

The braking distance for cars equipped with an anti-lock braking system (or Electronic Stability Program System) may be longer than for those without it in the following road conditions.

During these conditions the vehicle should be driven at reduced speeds:

- **Rough, gravel or snow-covered roads.**
- **With tire chains installed.**

(Continued)

(Continued)

- **On roads where the road surface is pitted or has different surface height.**

The safety features of an ABS (or ESP) equipped vehicle should not be tested by high speed driving or cornering. This could endanger the safety of yourself or others.

The ABS continuously senses the speed of the wheels. If the wheels are going to lock, the ABS system repeatedly modulates the hydraulic brake pressure to the wheels.

When you apply your brakes under conditions which may lock the wheels, you may hear a “tik-tik” sound from the brakes, or feel a corresponding sensation in the brake pedal. This is normal and it means your ABS is active.

In order to obtain the maximum benefit from your ABS in an emergency situation, do not attempt to modulate your brake pressure and do not try to pump your brakes. Press your brake pedal as hard as possible or as hard as the situation warrants and allow the ABS to control the force being delivered to the brakes.

✻ NOTICE

A click sound may be heard in the engine compartment when the vehicle begins to move after the engine is started. These conditions are normal and indicate that the anti-lock brake system is functioning properly.

- Even with the anti-lock brake system, your vehicle still requires sufficient stopping distance. Always maintain a safe distance from the vehicle in front of you.
- Always slow down when cornering. The anti-lock brake system cannot prevent accidents resulting from excessive speeds.
- On loose or uneven road surfaces, operation of the anti-lock brake system may result in a longer stopping distance than for vehicles equipped with a conventional brake system.

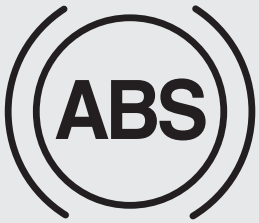

W-78

⚠ CAUTION

- ***If the ABS warning light is on and stays on, you may have a problem with the ABS. In this case, however, your regular brakes will work normally.***
- ***The ABS warning light will stay on for approximately 3 seconds after the ignition switch is ON. During that time, the ABS will go through self-diagnosis and the light will go off if everything is normal. If the light stays on, you may have a problem with your ABS. Contact an authorized HYUNDAI dealer as soon as possible.***

⚠ CAUTION

- ***When you drive on a road having poor traction, such as an icy road, and operate your brakes continuously, the ABS will be active continuously and the ABS warning light may illuminate. Pull your car over to a safe place and stop the engine.***
- ***Restart the engine. If the ABS warning light is off, then your ABS system is normal. Otherwise, you may have a problem with the ABS. Contact an authorized HYUNDAI dealer as soon as possible.***

✻ NOTICE

When you jump start your vehicle because of a drained battery, the engine may not run as smoothly and the ABS warning light may turn on at the same time. This happens because of the low battery voltage. It does not mean your ABS is malfunctioning.

- **Do not pump your brakes!**
- **Have the battery recharged before driving the vehicle.**

Left-Hand drive type

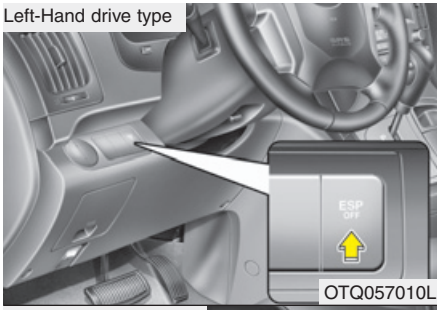

OTQ057010L

Right-Hand drive type

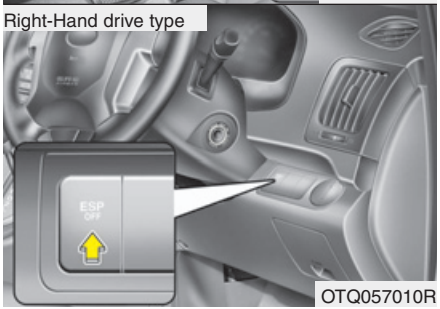

OTQ057010R

E070500AUN-EE

Electronic stability program (ESP) (If equipped)

The Electronic Stability Program (ESP) system is designed to stabilize the vehicle during cornering maneuvers. ESP checks where you are steering and where the vehicle is actually going. ESP applies the brakes at individual wheels and intervenes in the engine management system to stabilize the vehicle.

⚠ WARNING

Never drive too fast for the road conditions or too quickly when cornering. Electronic stability program (ESP) will not prevent accidents. Excessive speed in turns, abrupt maneuvers and hydroplaning on wet surfaces can still result in serious accidents. Only a safe and attentive driver can prevent accidents by avoiding maneuvers that cause the vehicle to lose traction. Even with ESP installed, always follow all the normal precautions for driving - including driving at safe speeds for the conditions.

The Electronic Stability Program (ESP) system is an electronic system designed to help the driver maintain vehicle control under adverse conditions. It is not a substitute for safe driving practices. Factors including speed, road conditions and driver steering input can all affect whether ESP will be effective in preventing a loss of control. It is still your responsibility to drive and corner at reasonable speeds and to leave a sufficient margin of safety.

When you apply your brakes under conditions which may lock the wheels, you may hear a “tik-tik” sound from the brakes, or feel a corresponding sensation in the brake pedal. This is normal and it means your ESP is active.

✻ NOTICE

A click sound may be heard in the engine compartment when the vehicle begins to move after the engine is started. These conditions are normal and indicate that the Electronic Stability Program System is functioning properly.

E070501AUN-EE

ESP operation

ESP ON condition

- When the ignition is turned ON, ESP and ESP OFF indicator lights illuminate for approximately 3 seconds, then ESP is turned on.
- Press the ESP OFF button for at least half a second after turning the ignition ON to turn ESP off. (ESP OFF indicator will illuminate). To turn the ESP on, press the ESP OFF button (ESP OFF indicator light will go off).
- When starting the engine, you may hear a slight ticking sound. This is the ESP performing an automatic system self-check and does not indicate a problem.

When operating

When the ESP is in operation, ESP indicator light blinks.

- When the Electronic Stability Program is operating properly, you can feel a slight pulsation in the vehicle. This is only the effect of brake control and indicates nothing unusual.
- When moving out of the mud or slippery road, pressing the accelerator pedal may not cause the engine rpm (revolutions per minute) to increase.

E070502AUN-EE

ESP operation off

ESP OFF state

- To cancel ESP operation, press the ESP OFF button (ESP OFF indicator light illuminates).
- If the ignition switch is turned to LOCK position when ESP is off, ESP remains off. Upon restarting the engine, the ESP will automatically turn on again.

■ ESP indicator light

ESP

■ ESP OFF indicator light

ESP OFF

E070503ATQ

Indicator light

When ignition switch is turned to ON, the indicator light illuminates, then goes off if the ESP system is operating normally.

The ESP indicator light blinks whenever ESP is operating or illuminates when ESP fails to operate. ESP OFF indicator light comes on when the ESP is turned off with the button.

✻ NOTICE

After reconnecting or recharging a discharged battery, the ESP indicator may illuminate. In this case, turn the steering wheel half way to the left and right while the ignition switch is in the ON position. Then, restart the engine after the ignition is off. If the ESP indicator does not turn off, have the system checked by an authorized HYUNDAI dealer as soon as possible.

⚠ CAUTION

Driving with varying tire or wheel sizes may cause the ESP system to malfunction. When replacing tires, make sure they are the same size as your original tires.

⚠ WARNING

The Electronic Stability Program system is only a driving aid; use precautions for safe driving by slowing down on curved, snowy, or icy roads. Drive slowly and don't attempt to accelerate whenever the ESP indicator light is blinking, or when the road surface is slippery.

E070504AUN-EE

ESP OFF usage

When driving

- The ESP turned on for daily driving whenever possible.
- To turn ESP off while driving, press the ESP OFF button while driving on a flat road surface.

Never press the ESP OFF button while ESP is operating (ESP indicator light blinks).

If ESP is turned off while ESP is operating, the vehicle may slip out of control.

✻ NOTICE

- **When operating the vehicle on a dynamometer, ensure that the ESP is turned off (ESP OFF light illuminated). If the ESP is left on, it may prevent the vehicle speed from increasing, and result in false diagnosis.**
- **Turning the ESP off does not affect ABS or brake system operation.**

⚠ WARNING

Never press the ESP OFF button while ESP is operating.

If the ESP is turned off while ESP is operating, the vehicle may go out of control.

To turn ESP off while driving, press the ESP OFF button while driving on a flat road surface.

E070600AFD

Good braking practices

⚠ WARNING

- **Whenever leaving vehicle or parking, always set the parking brake as far as possible and fully engage the vehicle's transmission into the park position. Vehicles not fully engaged in park with the parking brake set are at risk for moving inadvertently and injuring yourself or others.**
- **All vehicles should always have the parking brake fully engaged when parking to avoid inadvertent movement of the car which can injure occupants or pedestrians.**

- After parking the vehicle, check to be sure the parking brake is not engaged and that the parking brake indicator light is out before driving away.
- Driving through water may get the brakes wet. They can also get wet when the car is washed. Wet brakes can be dangerous! Your car will not stop as quickly if the brakes are wet. Wet brakes may cause the car to pull to one side.

  To dry the brakes, apply the brakes lightly until the braking action returns to normal, taking care to keep the car under control at all times. If the braking action does not return to normal, stop as soon as it is safe to do so and call an authorized HYUNDAI dealer for assistance.
- Don't coast down hills with the car out of gear. This is extremely hazardous. Keep the car in gear at all times, use the brakes to slow down, then shift to a lower gear so that engine braking will help you maintain a safe speed.
- Don't "ride" the brake pedal. Resting your foot on the brake pedal while driving can be dangerous because it can result in the brakes overheating and losing their effectiveness. It also increases the wear of the brake components.
- If a tire goes flat while you are driving, apply the brakes gently and keep the car pointed straight ahead while you slow down. When you are moving slowly enough for it to be safe to do so, pull off the road and stop in a safe place.
- If your car is equipped with an automatic transmission, don't let your car creep forward. To avoid creeping forward, keep your foot firmly on the brake pedal when the car is stopped.
- Use caution when parking on a hill. Firmly engage the parking brake and place the gear selector lever in P (automatic transmission) or in first or reverse gear (manual transmission). If your car is facing downhill, turn the front wheels into the curb to help keep the car from rolling. If your car is facing uphill, turn the front wheels away from the curb to help keep the car from rolling. If there is no curb or if it is required by other conditions to keep the car from rolling, block the wheels.
- Under some conditions your parking brake can freeze in the engaged position. This is most likely to happen when there is an accumulation of snow or ice around or near the rear brakes or if the brakes are wet. If there is a risk that the parking brake may freeze, apply it only temporarily while you put the gear selector lever in P (automatic transmission) or in first or reverse gear (manual transmission) and block the rear wheels so the car cannot roll. Then release the parking brake.
- Do not hold the vehicle on the upgrade with the accelerator pedal. This can cause the transmission to overheat. Always use the brake pedal or parking brake.

LOCKING DIFFERENTIAL (IF EQUIPPED)

E080000ATQ

Wagon/Van (If equipped)

A locking differential, if equipped, is for the rear wheel differential only. The features of this locking differential are described below:

Just as with a conventional differential, the wheel on one side is allowed to turn at a different speed from the wheel on the other side when the vehicle is cornering. The difference between the locking differential and a conventional differential is that if the wheel on one side of the vehicle loses traction, a greater amount of torque is applied to the rear wheel on the other side to improve traction.

✻ NOTICE

In a stationary position, the LD (Locking Differential) will operate when the difference of the revolution speed between the rear right wheel and the rear left wheel occurs.

The following procedures can be used to confirm that the locking differential is functioning properly:

(1) Position the vehicle so that one wheel is on a dry paved surface and the other on ice, snow, mud, etc. Drive the vehicle, and observe the operation of the locking differential. The vehicle should not become stuck if the differential is functioning properly.

(2) Depress the accelerator pedal gradually, and then when traction is good, depress it forcefully. If the vehicle accelerates well, the differential is functioning properly.

✻ NOTICE

Usually a locking differential will operate and release automatically but occasionally it may not release automatically. At this time you will feel the tire is dragged when you are driving or cornering. You can release it manually by slightly turning the steering wheel right and left while the vehicle is moving slowly.

⚠ CAUTION

- ***Never start the engine with the gearshift lever placed in the forward or reverse while one of the rear wheels is jacked up and the other in contact with the ground; doing so may cause the vehicle to jump forward.***
- ***If one of the rear wheels begins to spin in mud, snow, etc., the vehicle can sometimes be driven out by depressing the accelerator pedal further; however, avoid running the engine continuously at high rpm because doing so could damage the locking differential.***

ECONOMICAL OPERATION

E100000AFD

Your vehicle's fuel economy depends mainly on your style of driving, where you drive and when you drive.

Each of these factors affects how many miles (kilometers) you can get from a gallon (liter) of fuel. To operate your vehicle as economically as possible, use the following driving suggestions to help save money in both fuel and repairs:

- Drive smoothly. Accelerate at a moderate rate. Do not make "jack-rabbit" starts or full-throttle shifts and maintain a steady cruising speed. Don't race between stoplights. Try to adjust your speed to that of the other traffic so you don't have to change speeds unnecessarily. Avoid heavy traffic whenever possible. Always maintain a safe distance from other vehicles so you can avoid unnecessary braking. This also reduces brake wear.
- Drive at a moderate speed. The faster you drive, the more fuel your car uses. Driving at a moderate speed, especially on the highway, is one of the most effective ways to reduce fuel consumption.
- Don't "ride" the brake or clutch pedal. This can increase fuel consumption and also increase wear on these components. In addition, driving with your foot resting on the brake pedal may cause the brakes to overheat, which reduces their effectiveness and may lead to more serious consequences.
- Take care of your tires. Keep them inflated to the recommended pressure. Incorrect inflation, either too much or too little, results in unnecessary tire wear. Check the tire pressures at least once a month.
- Be sure that the wheels are aligned correctly. Improper alignment can result from hitting curbs or driving too fast over irregular surfaces. Poor alignment causes faster tire wear and may also result in other problems as well as greater fuel consumption.
- Keep your car in good condition. For better fuel economy and reduced maintenance costs, maintain your car in accordance with the maintenance schedule in Section 7. If you drive your car in severe conditions, more frequent maintenance is required (see Section 7 for details).
- Keep your car clean. For maximum service, your vehicle should be kept clean and free of corrosive materials. It is especially important that mud, dirt, ice, etc. not be allowed to accumulate on the underside of the car. This extra weight can result in increased fuel consumption and also contribute to corrosion.
- Travel lightly. Do not carry unnecessary weight in your car. Weight reduces fuel economy.
- Do not let the engine idle longer than necessary. If you are waiting (and not in traffic), turn off your engine and restart only when you're ready to go.
- Remember, your vehicle does not require extended warm-up. After the engine has started, allow the engine to run for 10 to 20 seconds prior to placing the vehicle in gear. In very cold weather, however, give your engine a slightly longer warm-up period.
- Do not "lug" or "over-rev" the engine. Lugging is driving too slowly in too high a gear resulting in the engine bucking. If this happens, shift to a lower gear. Over-revving is racing the engine beyond its safe limit. This can be avoided by shifting at the recommended speeds.

- Use your air conditioning sparingly. The air conditioning system is operated by engine power so your fuel economy is reduced when you use it.
- Open windows at high speeds can reduce fuel economy.
- Fuel economy is less in crosswinds and headwinds. To help offset some of this loss, slow down when driving in these conditions.

Keeping a vehicle in good operating condition is important both for economy and safety. Therefore, have an authorized HYUNDAI dealer perform scheduled inspections and maintenance.

⚠ WARNING - Engine off during motion

Never turn the engine off to coast down hills or anytime the vehicle is in motion. The power steering and power brakes will not function properly without the engine running. Instead, keep the engine on and downshift to an appropriate gear for engine braking effect. In addition, turning off the ignition while driving could engage the steering wheel lock resulting in loss of vehicle steering which could cause serious injury or death.

SPECIAL DRIVING CONDITIONS

E110100AUN

Hazardous driving conditions

When hazardous driving conditions are encountered such as water, snow, ice, mud, sand, or similar hazards, follow these suggestions:

- Drive cautiously and allow extra distance for braking.
- Avoid sudden movements in braking or steering.
- When braking with non-ABS brakes pump the brake pedal with a light up-and-down motion until the vehicle is stopped.

⚠ WARNING - ABS

Do not pump the brake pedal on a vehicle equipped with ABS.

- If stalled in snow, mud, or sand, use second gear. Accelerate slowly to avoid spinning the drive wheels.
- Use sand, rock salt, tire chains, or other non-slip material under the drive wheels to provide traction when stalled in ice, snow, or mud.

⚠ WARNING - Downshifting

Downshifting with an automatic transmission, while driving on slippery surfaces can cause an accident. The sudden change in tire speed could cause the tires to skid. Be careful when downshifting on slippery surfaces.

E110200ATQ

Rocking the vehicle

If it is necessary to rock the vehicle to free it from snow, sand, or mud, first turn the steering wheel right and left to clear the area around your front wheels. Then, shift back and forth between 1st (First) and R (Reverse) in vehicles equipped with a manual transmission or R (Reverse) and any forward gear in vehicles equipped with an automatic transmission. Do not race the engine, and spin the wheels as little as possible. If you are still stuck after a few tries, have the vehicle pulled out by a tow vehicle to avoid engine overheating and possible damage to the transmission.

⚠ CAUTION

Prolonged rocking may cause engine over-heating, transmission damage or failure, and tire damage.

⚠ WARNING - Spinning tires

Do not spin the wheels, especially at speeds more than 56 km/h (35 mph). Spinning the wheels at high speeds when the vehicle is stationary could cause a tire to overheat which could result in tire damage that may injure bystanders.

✻ NOTICE

The ESP system (if equipped) should be turned OFF prior to rocking the vehicle.

⚠ WARNING

If your vehicle becomes stuck in snow, mud, sand, etc., then you may attempt to rock the vehicle free by moving it forward and backward. Do not attempt this procedure if people or objects are anywhere near the vehicle. During the rocking operation the vehicle may suddenly move forward of backward as it becomes unstuck, causing injury or damage to nearby people or objects.

E110300AUN

Smooth cornering

Avoid braking or gear changing in corners, especially when roads are wet. Ideally, corners should always be taken under gentle acceleration. If you follow these suggestions, tire wear will be held to a minimum.

E110400AUN

Driving at night

Because night driving presents more hazards than driving in the daylight, here are some important tips to remember:

- Slow down and keep more distance between you and other vehicles, as it may be more difficult to see at night, especially in areas where there may not be any street lights.

- Adjust your mirrors to reduce the glare from other driver's headlights.
- Keep your headlights clean and properly aimed on vehicles not equipped with the automatic headlight aiming feature. Dirty or improperly aimed headlights will make it much more difficult to see at night.
- Avoid staring directly at the headlights of oncoming vehicles. You could be temporarily blinded, and it will take several seconds for your eyes to readjust to the darkness.

E110500AUN

Driving in the rain

Rain and wet roads can make driving dangerous, especially if you're not prepared for the slick pavement. Here are a few things to consider when driving in the rain:

- A heavy rainfall will make it harder to see and will increase the distance needed to stop your vehicle, so slow down.
- Keep your windshield wiping equipment in good shape. Replace your windshield wiper blades when they show signs of streaking or missing areas on the windshield.
- If your tires are not in good condition, making a quick stop on wet pavement can cause a skid and possibly lead to an accident. Be sure your tires are in good shape.
- Turn on your headlights to make it easier for others to see you.
- Driving too fast through large puddles can affect your brakes. If you must go through puddles, try to drive through them slowly.
- If you believe you may have gotten your brakes wet, apply them lightly while driving until normal braking operation returns.

E110600AUN

Driving in flooded areas

Avoid driving through flooded areas unless you are sure the water is no higher than the bottom of the wheel hub. Drive through any water slowly. Allow adequate stopping distance because brake performance may be affected.

After driving through water, dry the brakes by gently applying them several times while the vehicle is moving slowly.

Driving off-road

Drive carefully off-road because your vehicle may be damaged by rocks or roots of trees. Become familiar with the off-road conditions where you are going to drive before you begin driving.

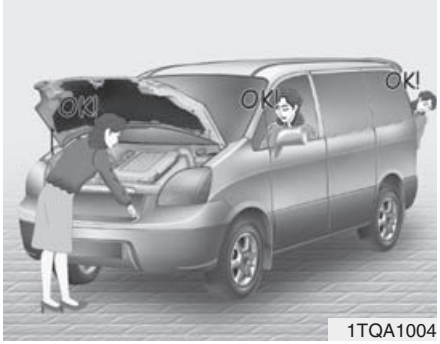

E110700AUN

Highway driving

Tires

Adjust the tire inflation pressures to specification. Low tire inflation pressures will result in overheating and possible failure of the tires.

Avoid using worn or damaged tires which may result in reduced traction or tire failure.

✻ NOTICE

Never exceed the maximum tire inflation pressure shown on the tires.

⚠ WARNING

- **Underinflated or overinflated tires can cause poor handling, loss of vehicle control, and sudden tire failure leading to accidents, injuries, and even death. Always check tires for proper inflation before driving. For proper tire pressures, refer to "Tires and wheels" in section 9.**
- **Driving on tires with no or insufficient tread is dangerous. Worn-out tires can result in loss of vehicle control, collisions, injury, and even death. Worn-out tires should be replaced as soon as possible and should never be used for driving. Always check the tire tread before driving your car. For further information and tread limits, refer to "Tires and wheels" in section 7.**

Fuel, engine coolant and engine oil

High speed travel consumes more fuel than urban motoring. Do not forget to check both engine coolant and engine oil.

Drive belt

A loose or damaged drive belt may result in overheating of the engine.

E111000AEN

Reducing the risk of a rollover

This multi-purpose passenger vehicle is defined as a Sports Utility Vehicle (SUV). SUV's have higher ground clearance and a narrower track to make them capable of performing in a wide variety of off-road applications. Specific design characteristics give them a higher center of gravity than ordinary cars. An advantage of the higher ground clearance is a better view of the road, which allows you to anticipate problems. They are not designed for cornering at the same speeds as conventional passenger drive vehicles, any more than low-slung sports cars are designed to perform satisfactorily in off-road conditions. Due to this risk, driver and passengers are strongly recommended to buckle their seat belts. In a rollover crash, an unbelted person is more likely to die than a person wearing a seat belt. There are steps that a driver can make to reduce the risk of a rollover. If at all possible, avoid sharp turns or abrupt maneuvers, do not load your roof rack with heavy cargo, and never modify your vehicle in any way.

⚠ WARNING - Rollover

As with other Sports Utility Vehicle (SUV), failure to operate this vehicle correctly may result in loss of control, an accident or vehicle rollover.

- **Utility vehicles have a significantly higher rollover rate than other types of vehicles.**
- **Specific design characteristics (higher ground clearance, narrower track, etc.) give this vehicle a higher center of gravity than ordinary cars.**
- **A SUV is not designed for cornering at the same speeds as conventional vehicles.**
- **Avoid sharp turns or abrupt maneuvers.**
- **In a rollover crash, an unbelted person is significantly more likely to die than a person wearing a seat belt. Make sure everyone in the vehicle is properly buckled up.**

WINTER DRIVING

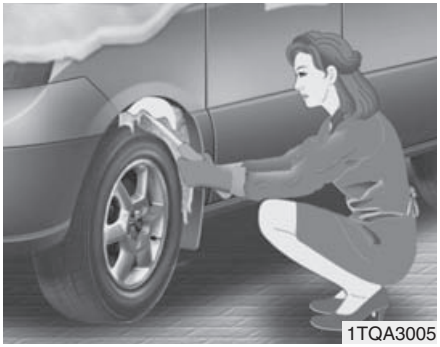

E120000AUN

The more severe weather conditions of winter result in greater wear and other problems. To minimize the problems of winter driving, you should follow these suggestions:

E120100AUN

Snowy or icy conditions

To drive your vehicle in deep snow, it may be necessary to use snow tires or to install tire chains on your tires. If snow tires are needed, it is necessary to select tires equivalent in size and type of the original equipment tires. Failure to do so may adversely affect the safety and handling of your car. Furthermore, speeding, rapid acceleration, sudden brake applications, and sharp turns are potentially very hazardous practices.

During deceleration, use engine braking to the fullest extent. Sudden brake applications on snowy or icy roads may cause skids to occur. You need to keep sufficient distance between the vehicle in operation in front and your vehicle. Also, apply the brake gently. It should be noted that installing tire chains on the tire will provide a greater driving force, but will not prevent side skids.

✻ NOTICE

Tire chains are not legal in all countries. Check the country lows before fitting tire chains.

E120101AUN

Snow tires

If you mount snow tires on your vehicle, make sure they are radial tires of the same size and load range as the original tires. Mount snow tires on all four wheels to balance your vehicle’s handling in all weather conditions. Keep in mind that the traction provided by snow tires on dry roads may not be as high as your vehicle's original equipment tires. You should drive cautiously even when the roads are clear. Check with the tire dealer for maximum speed recommendations.

⚠ WARNING - Snow tire size

Snow tires should be equivalent in size and type to the vehicle's standard tires. Otherwise, the safety and handling of your vehicle may be adversely affected.

Do not install studded tires without first checking local, state and municipal regulations for possible restrictions against their use.

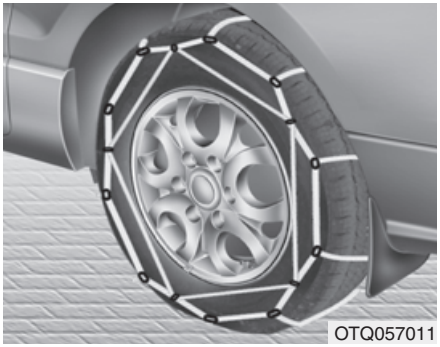

E120102ATQ

Tire chains

Since the sidewalls of radial tires are thinner, they can be damaged by mounting some types of snow chains on them. Therefore, the use of snow tires is recommended instead of snow chains. Do not mount tire chains on vehicles equipped with aluminum wheels; snow chains may cause damage to the wheels. If snow chains must be used, use wire-type chains with a thickness of less than 15 mm (0.59 in). Damage to your vehicle caused by improper snow chain use is not covered by your vehicle manufacturers warranty.

When using tire chains, attach them to the rear tires.

⚠ CAUTION

- ***Make sure the snow chains are the correct size and type for your tires. Incorrect snow chains can cause damage to the vehicle body and suspension and may not be covered by your vehicle manufacturer warranty. Also, the snow chain connecting hooks may be damaged from contacting vehicle components causing the snow chains to come loose from the tire. Make sure the snow chains are SAE class "S" certified.***
- ***Always check chain installation for proper mounting after driving approximately 0.5 to 1 km (0.3 to 0.6 miles) to ensure safe mounting. Retighten or remount the chains if they are loose.***

Chain installation

When installing chains, follow the manufacturer's instructions and mount them as tightly as you can. Drive slowly with chains installed. If you hear the chains contacting the body or chassis, stop and tighten them. If they still make contact, slow down until it stops. Remove the chains as soon as you begin driving on cleared roads.

⚠ WARNING
- Mounting chains

When mounting snow chains, park the vehicle on level ground away from traffic. Turn on the vehicle Hazard Warning flashers and place a triangular emergency warning device behind the vehicle if available. Always place the vehicle in P (Park), apply the parking brake and turn off the engine before installing snow chains.

⚠ WARNING - Tire chains

- **The use of chains may adversely affect vehicle handling.**
- **Do not exceed 30 km/h (20 mph) or the chain manufacturer's recommended speed limit, whichever is lower.**
- **Drive carefully and avoid bumps, holes, sharp turns, and other road hazards, which may cause the vehicle to bounce.**
- **Avoid sharp turns or locked-wheel braking.**

⚠ CAUTION

- ***Chains that are the wrong size or improperly installed can damage your vehicle's brake lines, suspension, body and wheels.***
- ***Stop driving and retighten the chains any time you hear them hitting the vehicle.***

E120200AUN

Use high quality ethylene glycol coolant

Your vehicle is delivered with high quality ethylene glycol coolant in the cooling system. It is the only type of coolant that should be used because it helps prevent corrosion in the cooling system, lubricates the water pump and prevents freezing. Be sure to replace or replenish your coolant in accordance with the maintenance schedule in section 7. Before winter, have your coolant tested to assure that its freezing point is sufficient for the temperatures anticipated during the winter.

E120300AEN

Check battery and cables

Winter puts additional burdens on the battery system. Visually inspect the battery and cables as described in section 7. The level of charge in your battery can be checked by an authorized HYUNDAI dealer or a service station.

E120400AEN

Change to "winter weight" oil if necessary

In some climates it is recommended that a lower viscosity "winter weight" oil be used during cold weather. See section 9 for recommendations. If you aren't sure what weight oil you should use, consult an authorized HYUNDAI dealer.

E120500AUN

Check spark plugs and ignition system

Inspect your spark plugs as described in section 7 and replace them if necessary. Also check all ignition wiring and components to be sure they are not cracked, worn or damaged in any way.

E120600AUN

To keep locks from freezing

To keep the locks from freezing, squirt an approved de-icer fluid or glycerine into the key opening. If a lock is covered with ice, squirt it with an approved de-icing fluid to remove the ice. If the lock is frozen internally, you may be able to thaw it out by using a heated key. Handle the heated key with care to avoid injury.

E120700AEN

Use approved window washer anti-freeze in system

To keep the water in the window washer system from freezing, add an approved window washer anti-freeze solution in accordance with instructions on the container. Window washer anti-freeze is available from an authorized HYUNDAI dealer and most auto parts outlets. Do not use engine coolant or other types of anti-freeze as these may damage the paint finish.

E120800AUN

Don't let your parking brake freeze

Under some conditions your parking brake can freeze in the engaged position. This is most likely to happen when there is an accumulation of snow or ice around or near the rear brakes or if the brakes are wet. If there is a risk the parking brake may freeze, apply it only temporarily while you put the gear selector lever in P (automatic transmission) or in first or reverse gear (manual transmission) and block the rear wheels so the car cannot roll. Then release the parking brake.

E120900AUN

Don't let ice and snow accumulate underneath

Under some conditions, snow and ice can build up under the fenders and interfere with the steering. When driving in severe winter conditions where this may happen, you should periodically check underneath the car to be sure the movement of the front wheels and the steering components is not obstructed.

E121000AUN

Carry emergency equipment

Depending on the severity of the weather where you drive your car, you should carry appropriate emergency equipment. Some of the items you may want to carry include tire chains, tow straps or chains, flashlight, emergency flares, sand, a shovel, jumper cables, a window scraper, gloves, ground cloth, coveralls, a blanket, etc.

TRAILER TOWING (FOR EUROPE)

E140000BFD

If you are considering towing with your car, you should first check with your country's Department of Motor Vehicles to determine their legal requirements.

Since laws vary the requirements for towing trailers, cars, or other types of vehicles or apparatus may differ. Ask an authorized HYUNDAI dealer for further details before towing.

⚠ WARNING - Towing a trailer

If you don't use the correct equipment and drive improperly, you can lose control when you pull a trailer. For example, if the trailer is too heavy, the brakes may not work well - or even at all. You and your passengers could be seriously or fatally injured. Pull a trailer only if you have followed all the steps in this section.

⚠ WARNING - Weight limits

Before towing, make sure the total trailer weight, gross combination weight, gross vehicle weight, gross axle weight and trailer tongue load are all within the limits.

✻ NOTICE - For Europe

- **The technically permissible maximum load on the rear axle(s) may be exceeded by not more than 15 % and the technically permissible maximum laden mass of the vehicle may be exceeded by not more than 10 % or 100 kg (220.4 lbs), whichever value is lower. In this case, do not exceed 100 km/h (62.1 mph) for vehicle of category M1 or 80 km/h (49.7 mph) for vehicle of category N1.**
- **When a vehicle of category M1 is towing a trailer, the additional load imposed at the trailer coupling device may cause the tire maximum load ratings to be exceeded, but not by more than 15 %. In this case, do not exceed 100 km/h (62.1 mph) and increase the tire inflation pressure by at least 0.2 bar.**

⚠ CAUTION

Pulling a trailer improperly can damage your vehicle and result in costly repairs not covered by your warranty. To pull a trailer correctly, follow the advice in this section.

Your vehicle can tow a trailer. To identify what the vehicle trailering capacity is for your vehicle, you should read the information in “Weight of the trailer” that appears later in this section.

Remember that trailering is different than just driving your vehicle by itself. Trailering means changes in handling, durability, and fuel economy. Successful, safe trailering requires correct equipment, and it has to be used properly.

This section contains many time-tested, important trailering tips and safety rules. Many of these are important for your safety and that of your passengers. Please read this section carefully before you pull a trailer.

Load-pulling components such as the engine, transmission, wheel assemblies, and tires are forced to work harder against the load of the added weight. The engine is required to operate at relatively higher speeds and under greater loads. This additional burden generates extra heat. The trailer also adds considerably to wind resistance, increasing the pulling requirements.

E140100AUN

Hitches

It's important to have the correct hitch equipment. Crosswinds, large trucks going by, and rough roads are a few reasons why you'll need the right hitch. Here are some rules to follow:

- Will you have to make any holes in the body of your vehicle when you install a trailer hitch? If you do, then be sure to seal the holes later when you remove the hitch.

  If you don't seal them, deadly carbon monoxide (CO) from your exhaust can get into your vehicle, as well as dirt and water.
- The bumpers on your vehicle are not intended for hitches. Do not attach rental hitches or other bumper-type hitches to them. Use only a frame-mounted hitch that does not attach to the bumper.

E140200AUN

Safety chains

You should always attach chains between your vehicle and your trailer. Cross the safety chains under the tongue of the trailer so that the tongue will not drop to the road if it becomes separated from the hitch.

Instructions about safety chains may be provided by the hitch manufacturer or by the trailer manufacturer. Follow the manufacturer's recommendation for attaching safety chains. Always leave just enough slack so you can turn with your trailer. And, never allow safety chains to drag on the ground.

E140300AUN

Trailer brakes

If your trailer is equipped with a braking system, make sure it conforms to your country's regulations and that it is properly installed and operating correctly.

If your trailer weighs more than the maximum trailer weight without trailer brakes loaded, then it needs its own brakes and they must be adequate. Be sure to read and follow the instructions for the trailer brakes so you'll be able to install, adjust and maintain them properly.

- Don't tap into your vehicle's brake system.

⚠ WARNING - Trailer brakes

Do not use a trailer with its own brakes unless you are absolutely certain that you have properly set up the brake system. This is not a task for amateurs. Use an experienced, competent trailer shop for this work.

E140400AUN

Driving with a trailer

Towing a trailer requires a certain amount of experience. Before setting out for the open road, you must get to know your trailer. Acquaint yourself with the feel of handling and braking with the added weight of the trailer. And always keep in mind that the vehicle you are driving is now a good deal longer and not nearly so responsive as your vehicle is by itself.

Before you start, check the trailer hitch and platform, safety chains, electrical connector(s), lights, tires and mirror adjustment. If the trailer has electric brakes, start your vehicle and trailer moving and then apply the trailer brake controller by hand to be sure the brakes are working. This lets you check your electrical connection at the same time.

During your trip, check occasionally to be sure that the load is secure, and that the lights and any trailer brakes are still working.

E140401AUN

Following distance

Stay at least twice as far behind the vehicle ahead as you would when driving your vehicle without a trailer. This can help you avoid situations that require heavy braking and sudden turns.

E140402AUN

Passing

You'll need more passing distance up ahead when you're towing a trailer. And, because of the increased vehicle length, you'll need to go much farther beyond the passed vehicle before you can return to your lane.

E140403AUN

Backing up

Hold the bottom of the steering wheel with one hand. Then, to move the trailer to the left, just move your hand to the left. To move the trailer to the right, move your hand to the right. Always back up slowly and, if possible, have someone guide you.

E140404AUN

Making turns

When you're turning with a trailer, make wider turns than normal. Do this so your trailer won't strike soft shoulders, curbs, road signs, trees, or other objects. Avoid jerky or sudden maneuvers. Signal well in advance.

E140405AFD

Turn signals when towing a trailer

When you tow a trailer, your vehicle has to have a different turn signal flasher and extra wiring. The green arrows on your instrument panel will flash whenever you signal a turn or lane change. Properly connected, the trailer lights will also flash to alert other drivers you're about to turn, change lanes, or stop.

When towing a trailer, the green arrows on your instrument panel will flash for turns even if the bulbs on the trailer are burned out. Thus, you may think drivers behind you are seeing your signals when, in fact, they are not. It's important to check occasionally to be sure the trailer bulbs are still working. You must also check the lights every time you disconnect and then reconnect the wires.

Do not connect a trailer lighting system directly to your vehicle's lighting system. Use only an approved trailer wiring harness.

An authorized HYUNDAI dealer can assist you in installing the wiring harness.

⚠ WARNING

Failure to use an approved trailer wiring harness could result in damage to the vehicle electrical system and/or personal injury.

E140406ATQ

Driving on grades

Reduce speed and shift to a lower gear before you start down a long or steep downgrade. If you don't shift down, you might have to use your brakes so much that they would get hot and no longer operate efficiently.

On a long uphill grade, shift down and reduce your speed to around 70 km/h (45 mph) to reduce the possibility of engine and transmission overheating.

If your trailer weighs more than the maximum trailer weight without trailer brakes and you have an automatic transmission, you should drive in D (Drive) when towing a trailer.

Operating your vehicle in D (Drive) when towing a trailer will minimize heat build up and extend the life of your transmission.

⚠ CAUTION

- ***When towing a trailer on steep grades (in excess of 6%) pay close attention to the engine coolant temperature gauge to ensure the engine does not overheat.***

(Continued)

(Continued)

If the needle of the coolant temperature gauge moves across the dial towards "H" (HOT), pull over and stop as soon as it is safe to do so, and allow the engine to idle until it cools down. You may proceed once the engine has cooled sufficiently.

- ***You must decide driving speed depending on trailer weight and uphill grade to reduce the possibility of engine and transmission overheating.***

⚠ CAUTION

Going uphill under hot ambient temperature (above 35°C) with GVW and/or trailer, a minimal fuel tank level of 5 liter has to be assured in order to prevent power limitation due to fuel overheating as well as further damages in the fuel injection equipment.

E140407BUN

Parking on hills

Generally, if you have a trailer attached to your vehicle, you should not park your vehicle on a hill. People can be seriously or fatally injured, and both your vehicle and the trailer can be damaged if unexpectedly roll down hill.

⚠ WARNING - Parking on a hill

Parking your vehicle on a hill with a trailer attached could cause serious injury or death, should the trailer break loose.

However, if you ever have to park your trailer on a hill, here's how to do it:

1. Pull the vehicle into the parking space. Turn the steering wheel in the direction of the curb (right if headed down hill, left if headed up hill).
2. If the vehicle has a manual transmission, place the car in neutral. If the vehicle has an automatic transmission, place the car in P (Park).
3. Set the parking brake and shut off the vehicle.
4. Place chocks under the trailer wheels on the down hill side of the wheels.

5. Start the vehicle, hold the brakes, shift to neutral, release the parking brake and slowly release the brakes until the trailer chocks absorb the load.
6. Reapply the brakes, reapply the parking brake and shift the vehicle to R (Reverse) for manual transmission or P (Park) automatic transmission.
7. Shut off the vehicle and release the vehicle brakes but leave the parking brake set.

⚠ WARNING - Parking brake

It can be dangerous to get out of your vehicle if the parking brake is not firmly set.

If you have left the engine running, the vehicle can move suddenly. You or others could be seriously or fatally injured.

When you are ready to leave after parking on a hill

1. With the manual transmission in Neutral or automatic transmission in P (Park), apply your brakes and hold the brake pedal down while you:
   - Start your engine;
   - Shift into gear; and
   - Release the parking brake.
2. Slowly remove your foot from the brake pedal.
3. Drive slowly until the trailer is clear of the chocks.
4. Stop and have someone pick up and store the chocks.

E140500AUN

Maintenance when trailer towing

Your vehicle will need service more often when you regularly pull a trailer. Important items to pay particular attention to include engine oil, automatic transmission fluid, axle lubricant and cooling system fluid. Brake condition is another important item to frequently check. Each item is covered in this manual, and the Index will help you find them quickly. If you're trailering, it's a good idea to review these sections before you start your trip.

Don't forget to also maintain your trailer and hitch. Follow the maintenance schedule that accompanied your trailer and check it periodically. Preferably, conduct the check at the start of each day's driving. Most importantly, all hitch nuts and bolts should be tight.

⚠ CAUTION

- ***Due to higher load during trailer usage, overheating might occur in hot days or during uphill driving. If the coolant gauge indicates over-heating, switch off the A/C and stop the vehicle in a safe area to cool down the engine.***
- ***When towing check transmission fluid more frequently.***
- ***If your vehicle is not equipped with the air conditioner, you should install a condenser fan to improve engine performance when towing a trailer.***

E140600ATQ

If you do decide to pull a trailer

Here are some important points if you decide to pull a trailer:

- Consider using a sway control. You can ask a hitch dealer about sway control.
- Do not do any towing with your car during its first 2,000 km (1,200 miles) in order to allow the engine to properly break in. Failure to heed this caution may result in serious engine or transmission damage.
- When towing a trailer, be sure to consult an authorized HYUNDAI dealer for further information on additional requirements such as a towing kit, etc.
- Always drive your vehicle at a moderate speed (less than 100 km/h (60 mph)).
- On a long uphill grade, do not exceed 70 km/h (45 mph) or the posted towing speed limit, whichever is lower.
- The chart contains important considerations that have to do with weight:

<For Europe>

Item \ Engine		A2.5/A2 2.5 Diesel Engine	Gasoline Engine	
		Manual transmission	Manual transmission	Automatic transmission
Maximum trailer weight kg (lbs.)	Without brake System	750 (1653)	700 (1543)	750 (1653)
	With brake System	2300 (5070)	1500 (3306)	1500 (3306)
Maximum permissible static vertical load on the coupling device kg (lbs.)		100 (220)	100 (220)	100 (220)
Recommended distance from rear wheel center to coupling point mm (Inch)		1170 (46)	1170 (46)	1170 (46)

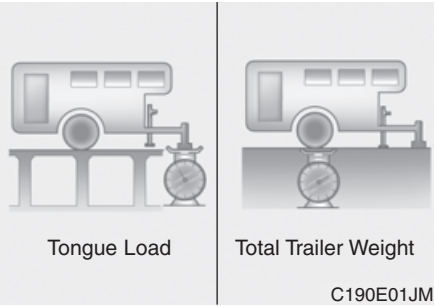

E140601AUN

Weight of the trailer

How heavy can a trailer safely be? It should never weigh more than the maximum trailer weight with trailer brakes. But even that can be too heavy.

It depends on how you plan to use your trailer. For example, speed, altitude, road grades, outside temperature and how often your vehicle is used to pull a trailer are all important. The ideal trailer weight can also depend on any special equipment that you have on your vehicle.

E140602AEN

Weight of the trailer tongue

The tongue load of any trailer is an important weight to measure because it affects the total gross vehicle weight (GVW) of your vehicle. This weight includes the curb weight of the vehicle, any cargo you may carry in it, and the people who will be riding in the vehicle. And if you will tow a trailer, you must add the tongue load to the GVW because your vehicle will also be carrying that weight.

The trailer tongue should weigh a maximum of 10% of the total loaded trailer weight, within the limits of the maximum trailer tongue load permissible. After you've loaded your trailer, weigh the trailer and then the tongue, separately, to see if the weights are proper. If they aren't, you may be able to correct them simply by moving some items around in the trailer.

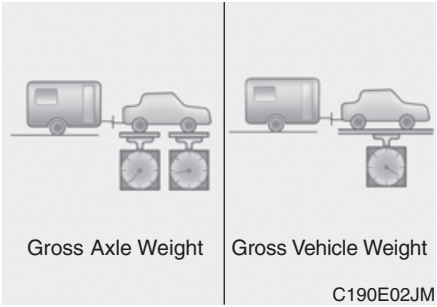

⚠ WARNING - Trailer

- **Never load a trailer with more weight in the rear than in the front. The front should be loaded with approximately 60% of the total trailer load; the rear should be loaded with approximately 40% of the total trailer load.**
- **Never exceed the maximum weight limits of the trailer or trailer towing equipment. Improper loading can result in damage to your vehicle and/or personal injury. Check weights and loading at a commercial scale or highway patrol office equipped with scales.**
- **An improperly loaded trailer can cause loss of vehicle control.**

VEHICLE WEIGHT

E160000AUN

This section will guide you in the proper loading of your vehicle and/or trailer, to keep your loaded vehicle weight within its design rating capability, with or without a trailer. Properly loading your vehicle will provide maximum return of the vehicle design performance. Before loading your vehicle, familiarize yourself with the following terms for determining your vehicle's weight ratings, with or without a trailer, from the vehicle's specifications and the certification label:

E160100AUN

Base curb weight

This is the weight of the vehicle including a full tank of fuel and all standard equipment. It does not include passengers, cargo, or optional equipment.

E160200AUN

Vehicle curb weight

This is the weight of your new vehicle when you picked it up from your dealer plus any aftermarket equipment.

E160300AUN

Cargo weight

This figure includes all weight added to the Base Curb Weight, including cargo and optional equipment.

E160400AUN

GAW (Gross axle weight)

This is the total weight placed on each axle (front and rear) - including vehicle curb weight and all payload.

E160500AUN

GAWR (Gross axle weight rating)

This is the maximum allowable weight that can be carried by a single axle (front or rear). These numbers are shown on the certification label.
The total load on each axle must never exceed its GAWR.

E160600AUN

GVW (Gross vehicle weight)

This is the Base Curb Weight plus actual Cargo Weight plus passengers.

E160700AUN

GVWR (Gross vehicle weight rating)

This is the maximum allowable weight of the fully loaded vehicle (including all options, equipment, passengers and cargo). The GVWR is shown on the certification label located on the driver's (or front passenger's) door sill.

E160800AUN

Overloading

⚠ WARNING - Vehicle weight

The gross axle weight rating (GAWR) and the gross vehicle weight rating (GVWR) for your vehicle are on the certification label attached to the driver's (or front passenger's) door. Exceeding these ratings can cause an accident or vehicle damage. You can calculate the weight of your load by weighing the items (and people) before putting them in the vehicle. Be careful not to overload your vehicle.

Road warning / 6-2
In case of an emergency while driving / 6-2
If the engine will not start / 6-3
Emergency starting / 6-4
If the engine overheats / 6-6
If you have a flat tire / 6-7
Towing / 6-14
Emergency commodity / 6-19

What to do in an emergency

6

ROAD WARNING

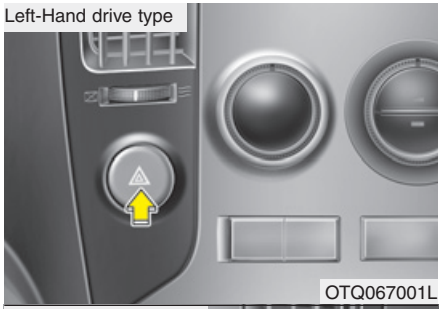

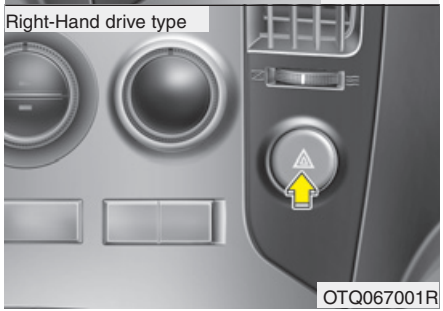

F010100AUN

Hazard warning flasher

The hazard warning flasher serves as a warning to other drivers to exercise extreme caution when approaching, overtaking, or passing your vehicle.

It should be used whenever emergency repairs are being made or when the vehicle is stopped near the edge of a roadway.

Depress the flasher switch with the ignition switch in any position. The flasher switch is located in the center console switch panel. All turn signal lights will flash simultaneously.

- The hazard warning flasher operates whether your vehicle is running or not.
- The turn signals do not work when the hazard flasher is on.
- Care must be taken when using the hazard warning flasher while the vehicle is being towed.

IN CASE OF AN EMERGENCY WHILE DRIVING

F020100AUN

If the engine stalls at a crossroad or crossing

- If the engine stalls at a crossroad or crossing, set the shift lever in the N(Neutral) position and then push the vehicle to a safe place.
- If your vehicle has a manual transaxle not equipped with the ignition lock switch, the vehicle can move forward by shifting to the 2 (second) or 3 (third) gear and then turning the starter without depressing the clutch pedal.

F020200AUN

If you have a flat tire while driving

If a tire goes flat while you are driving:

1. Take your foot off the accelerator pedal and let the car slow down while driving straight ahead. Do not apply the brakes immediately or attempt to pull off the road as this may cause a loss of control. When the car has slowed to such a speed that it is safe to do so, brake carefully and pull off the road. Drive off the road as far as possible and park on firm, level ground. If you are on a divided highway, do not park in the median area between the two traffic lanes.

2. When the car is stopped, turn on your emergency hazard flashers, set the parking brake and put the transmission in P (automatic transmission) or reverse (manual transmission).
3. Have all passengers get out of the car. Be sure they all get out on the side of the car that is away from traffic.
4. When changing a flat tire, follow the instruction provided later in this section.

F020300AEN

If engine stalls while driving

1. Reduce your speed gradually, keeping a straight line. Move cautiously off the road to a safe place.
2. Turn on your emergency flashers.
3. Try to start the engine again. If your vehicle will not start, contact an authorized HYUNDAI dealer or seek other qualified assistance.

IF THE ENGINE WILL NOT START

F030100AUN

If engine doesn't turn over or turns over slowly

1. If your car has an automatic transmission, be sure the gear selector lever is in N (Neutral) or P (Park) and the emergency brake is set.
2. Check the battery connections to be sure they are clean and tight.
3. Turn on the interior light. If the light dims or goes out when you operate the starter, the battery is discharged.
4. Check the starter connections to be sure they are securely tightened.
5. Do not push or pull the vehicle to start it. See instructions for "Jump starting".

⚠ WARNING

If the engine will not start, do not push or pull the car to start it. This could result in a collision or cause other damage. In addition, push or pull starting may cause the catalytic converter to be overloaded and create a fire hazard.

F030200AEN

If engine turns over normally but does not start

1. Check fuel level.
2. With the ignition switch in the LOCK position, check all connectors at the ignition coils and spark plugs. Reconnect any that may be disconnected or loose.
3. Check the fuel line in the engine compartment.
4. If the engine still does not start, call an authorized HYUNDAI dealer or seek other qualified assistance.

EMERGENCY STARTING

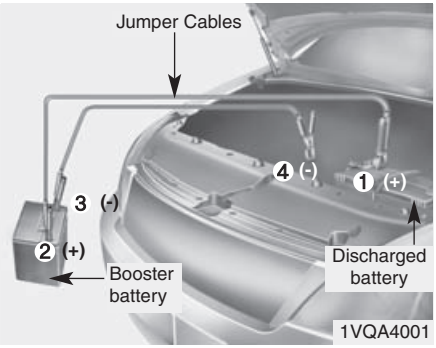

F040000AUN

Connect cables in numerical order and disconnect in reverse order.

F040100AEN

Jump starting

Jump starting can be dangerous if done incorrectly. Therefore, to avoid harm to yourself or damage to your vehicle or battery, follow the jump starting procedures. If in doubt, we strongly recommend that you have a competent technician or towing service jump start your vehicle.

⚠ CAUTION

Use only a 12-volt jumper system. You can damage a 12-volt starting motor, ignition system, and other electrical parts beyond repair by use of a 24-volt power supply (either two 12-volt batteries in series or a 24-volt motor generator set).

⚠ WARNING - Battery

Never attempt to check the electrolyte level of the battery as this may cause the battery to rupture or explode causing serious injury.

⚠ WARNING - Battery

- **Keep all flames or sparks away from the battery. The battery produces hydrogen gas which may explode if exposed to flame or sparks.**

  If these instructions are not followed exactly, serious personal injury and damage to the vehicle may occur! If you are not sure how to follow this procedure, seek qualified assistance. Automobile batteries contain sulfuric acid. This is poisonous and highly corrosive. When jump starting, wear protective glasses and be careful not to get acid on yourself, your clothing or on the car.
- **Do not attempt to jump start the vehicle if the discharged battery is frozen or if the electrolyte level is low; the battery may rupture or explode.**

F040101AEN

Jump starting procedure

1. Make sure the booster battery is 12-volt and that its negative terminal is grounded.
2. If the booster battery is in another vehicle, do not allow the vehicles to touch.
3. Turn off all unnecessary electrical loads.
4. Connect the jumper cables in the exact sequence shown in the illustration. First connect one end of a jumper cable to the positive terminal of the discharged battery (1), then connect the other end to the positive terminal on the booster battery (2).

   Proceed to connect one end of the other jumper cable to the negative terminal of the booster battery (3), then the other end to a solid, stationary, metallic point (for example, the engine lifting bracket) away from the battery (4). Do not connect it to or near any part that moves when the engine is cranked.

   Do not allow the jumper cables to contact anything except the correct battery terminals or the correct ground. Do not lean over the battery when making connections.

⚠ CAUTION - Battery cables

Do not connect the jumper cable from the negative terminal of the booster battery to the negative terminal of the discharged battery. This can cause the discharged battery to overheat and crack, releasing battery acid.

5. Start the engine of the vehicle with the booster battery and let it run at 2,000 rpm, then start the engine of the vehicle with the discharged battery.

If the cause of your battery discharging is not apparent, you should have your vehicle checked by an authorized HYUNDAI dealer.

F040200AUN

Push-starting

Your manual transmission-equipped vehicle should not be push-started because it might damage the emission control system.

Vehicles equipped with automatic transmission cannot be push-started.

Follow the directions in this section for jump-starting.

⚠ WARNING

Never tow a vehicle to start it because the sudden surge forward when the engine starts could cause a collision with the tow vehicle.

IF THE ENGINE OVERHEATS

F050000AFD

If your temperature gauge indicates overheating, you experience a loss of power, or hear loud pinging or knocking, the engine is probably too hot. If this happens, you should:

1. Pull off the road and stop as soon as it is safe to do so.
2. Place the gear selector lever in P (automatic transmission) or neutral (manual transmission) and set the parking brake. If the air conditioning is on, turn it off.
3. If engine coolant is running out under the car or steam is coming out from the hood, stop the engine. Do not open the hood until the coolant has stopped running or the steaming has stopped. If there is no visible loss of engine coolant and no steam, leave the engine running and check to be sure the engine cooling fan is operating. If the fan is not running, turn the engine off.
4. Check to see if the water pump drive belt is missing. If it is not missing, check to see that it is tight. If the drive belt seems to be satisfactory, check for coolant leaking from the radiator, hoses or under the car. (If the air conditioning had been in use, it is normal for cold water to be draining from it when you stop).

⚠ WARNING

While the engine is running, keep hair, hands and clothing away from moving parts such as the fan and drive belts to prevent injury.

5. If the water pump drive belt is broken or engine coolant is leaking out, stop the engine immediately and call the nearest authorized HYUNDAI dealer for assistance.

⚠ WARNING

Do not remove the radiator cap when the engine is hot. This can allow coolant to be blown out of the opening and cause serious burns.

6. If you cannot find the cause of the overheating, wait until the engine temperature has returned to normal. Then, if coolant has been lost, carefully add coolant to the reservoir to bring the fluid level in the reservoir up to the halfway mark.
7. Proceed with caution, keeping alert for further signs of overheating. If overheating happens again, call an authorized HYUNDAI dealer for assistance.

⚠ CAUTION

Serious loss of coolant indicates there is a leak in the cooling system and this should be checked as soon as possible by an authorized HYUNDAI dealer.

IF YOU HAVE A FLAT TIRE

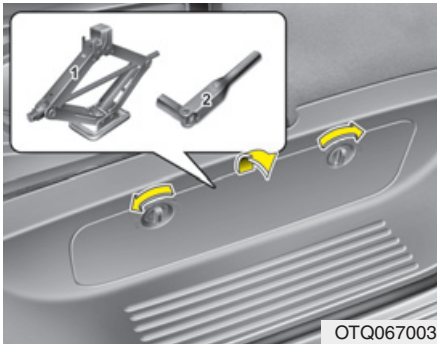

F070100ATQ

Jack and tools

The jack and wheel lug nut wrench (jack handle) are stored in the storage compartment under the front passenger's seat. Open the storage box cover to reach the equipment.

(1) Jack

(2) Wheel lug nut wrench
(Jack handle)

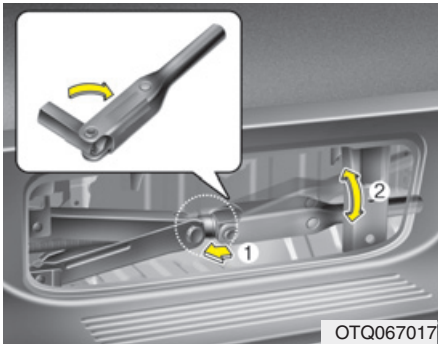

F070101BUN

Jacking instructions

The jack is provided for emergency tire changing only.

To prevent the jack from "rattling" while the vehicle is in motion, store it properly.

Follow jacking instructions to reduce the possibility of personal injury.

⚠ WARNING - Changing tires

- **Never attempt vehicle repairs in the traffic lanes of a public road or highway.**
- **Always move the vehicle completely off the road and onto the shoulder before trying to change a tire. The jack should be used on level firm ground. If you cannot find a firm, level place off the road, call a towing service company for assistance.**

(Continued)

(Continued)

- **Be sure to use the correct front and rear jacking positions on the vehicle; never use the bumpers or any other part of the vehicle for jacking support.**
- **The vehicle can easily roll off the jack causing serious injury or death.**
- **Do not get under a vehicle that is supported by a jack.**
- **Do not start or run the engine while the vehicle is on the jack.**
- **Do not allow anyone to remain in the vehicle while it is on the jack.**
- **Make sure any children present are in a secure place away from the road and from the vehicle to be raised with the jack.**

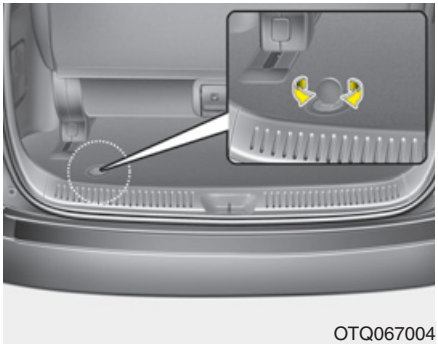
OTQ067004

F070200AEN

Removing and storing the spare tire

Your spare tire is stored underneath your vehicle, directly below the cargo area.

To remove the spare tire:

1. Open the tailgate.
2. Find the plastic hex bolt cover and remove the cover.

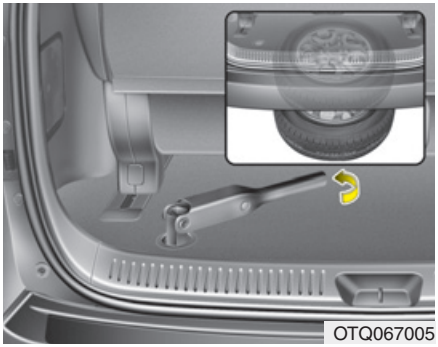
OTQ067005

3. Use the wheel lug nut wrench to loosen the bolt enough to lower the spare tire.

   Turn the wrench counterclockwise until the spare tire reaches the ground.

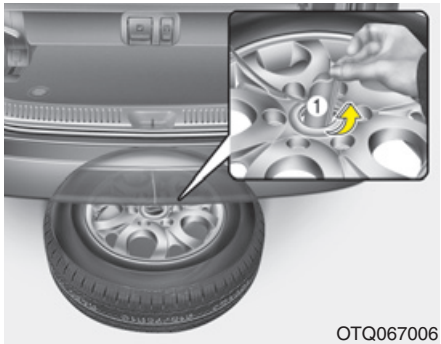

OTQ067006

4. After the spare tire reaches the ground, continue to turn the wrench counterclockwise, and draw the spare tire outside. Never rotate the wrench excessively, otherwise the spare tire carrier may be damaged.
5. Remove the retainer (1) from the center of the spare tire.

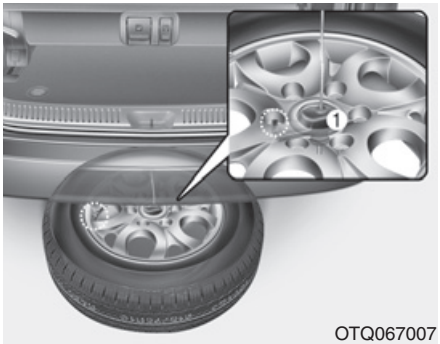

OTQ067007

To store the spare tire:

1. Lay the tire on the ground with the valve stem facing up.
2. Place the wheel under the vehicle and install the retainer (1) through the wheel center.
3. Turn the wrench clockwise until it clicks.

⚠ WARNING

Ensure the spare tire retainer is properly aligned with the center of the spare tire to prevent the spare tire "rattling". Otherwise, it may cause the spare tire to fall off the carrier and lead to an accident.

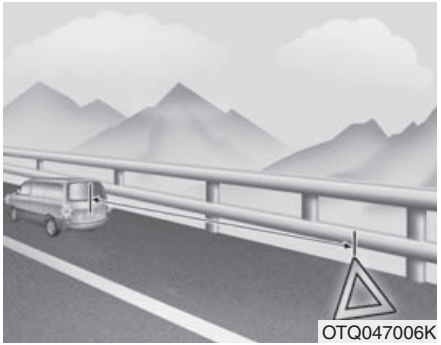
OTQ047006K

F070300ATQ

Changing tires

1. Park on a level surface and apply the parking brake firmly.
2. Shift the shift lever into R (Reverse) with manual transmission or P (Park) with automatic transmission.
3. Activate the hazard warning flasher.

OTQ067022

4. Remove the wheel lug nut wrench, jack and spare tire from the vehicle.
5. Block both the front and rear of the wheel that is diagonally opposite the jack position.

⚠ WARNING - Changing a tire

- **To prevent vehicle movement while changing a tire, always set the parking brake fully, and always block the wheel diagonally opposite the wheel being changed.**
- **We recommend that the wheels of the vehicle be blocked, and that no person remain in a vehicle that is being jacked.**

OTQ067008

6. Loosen the wheel lug nuts counterclockwise one turn each, but do not remove any nut until the tire has been raised off the ground.

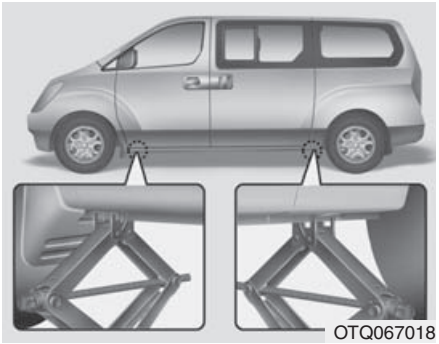
OTQ067018

7. Place the jack at the front or rear jacking position closest to the tire you are changing. Place the jack at the designated locations under the frame. The jacking positions are plates welded to the frame with two tabs and a raised dot to index with the jack.

⚠ WARNING - Jack location
To reduce the possibility of injury, be sure to use only the jack provided with the vehicle and in the correct jack position; never use any other part of the vehicle for jack support.

OTQ067016

8. Insert the jack handle into the jack and turn it clockwise, raising the vehicle until the tire just clears the ground. This measurement is approximately 30 mm (1.2 in). Before removing the wheel lug nuts, make sure the vehicle is stable and that there is no chance for movement or slippage.

9. Loosen the wheel nuts and remove them with your fingers. Slide the wheel off the studs and lay it flat so it cannot roll away. To put the wheel on the hub, pick up the spare tire, line up the holes with the studs and slide the wheel onto them. If this is difficult, tip the wheel slightly and get the top hole in the wheel lined up with the top stud. Then jiggle the wheel back and forth until the wheel can be slid over the other studs.

⚠ WARNING

Wheels may have sharp edges. Handle them carefully to avoid possible severe injury. Before putting the wheel into place, be sure that there is nothing on the hub or wheel (such as mud, tar, gravel, etc.) that interferes with the wheel from fitting solidly against the hub.

If there is, remove it. If there is not good contact on the mounting surface between the wheel and hub, the wheel nuts could come loose and cause the loss of a wheel. Loss of a wheel may result in loss of control of the vehicle. This may cause serious injury or death.

10. To reinstall the wheel, hold it on the studs, put the wheel nuts on the studs and tighten them finger tight. The nuts should be installed with their tapered small diameter ends directed inward. Jiggle the tire to be sure it is completely seated, then tighten the nuts as much as possible with your fingers again.
11. Lower the car to the ground by turning the wheel nut wrench counterclockwise.

OTQ067011

Then position the wrench as shown in the drawing and tighten the wheel nuts. Be sure the socket is seated completely over the nut. Do not stand on the wrench handle or use an extension pipe over the wrench handle. Go around the wheel tightening every other nut until they are all tight. Then double-check each nut for tightness. After changing wheels, have an authorized HYUNDAI dealer tighten the wheel nuts to their proper torque as soon as possible.

Wheel nut tightening torque:

9~11 kg·m (65~79 lb·ft)

If you have a tire gauge, remove the valve cap and check the air pressure. If the pressure is lower than recommended, drive slowly to the nearest service station and inflate to the correct pressure. If it is too high, adjust it until it is correct. Always reinstall the valve cap after checking or adjusting tire pressure. If the cap is not replaced, air may leak from the tire. If you lose a valve cap, buy another and install it as soon as possible.

After you have changed wheels, always secure the flat tire in its place and return the jack and tools to their proper storage locations.

⚠ CAUTION

Your vehicle has metric threads on the wheel studs and nuts. Make certain during wheel removal that the same nuts that were removed are reinstalled - or, if replaced, that nuts with metric threads and the same chamfer configuration are used. Installation of a non-metric thread nut on a metric stud or vice-versa will not secure the wheel to the hub properly and will damage the stud so that it must be replaced.

Note that most lug nuts do not have metric threads. Be sure to use extreme care in checking for thread style before installing aftermarket lug nuts or wheels. If in doubt, consult an authorized HYUNDAI dealer.

⚠ WARNING - Wheel studs

If the studs are damaged, they may lose their ability to retain the wheel. This could lead to the loss of the wheel and a collision resulting in serious injuries.

To prevent the jack, wheel lug nut wrench and spare tire from rattling while the vehicle is in motion, store them properly.

⚠ WARNING - Inadequate spare tire pressure

Check the inflation pressures as soon as possible after installing the spare tire. Adjust it to the specified pressure, if necessary. Refer to “Tires and wheels” section 9.

TOWING

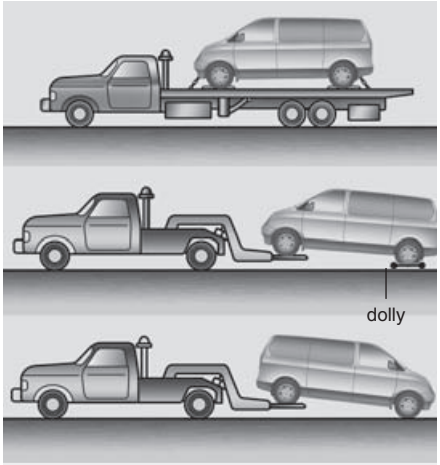

OTQ067009

F080100BTQ

Towing service

If emergency towing is necessary, we recommend having it done by an authorized HYUNDAI dealer or a commercial tow-truck service. Proper lifting and towing procedures are necessary to prevent damage to the vehicle. The use of wheel dollies or flatbed is recommended.

It is acceptable to tow the vehicle with the front wheels on the ground (without dollies) and the rear wheels off the ground.

If any of the loaded wheels or suspension components are damaged or the vehicle is being towed with the rear wheels on the ground, use a towing dolly under the rear wheels.

When being towed by a commercial tow truck and wheel dollies are not used, the rear of the vehicle should always be lifted, not the front.

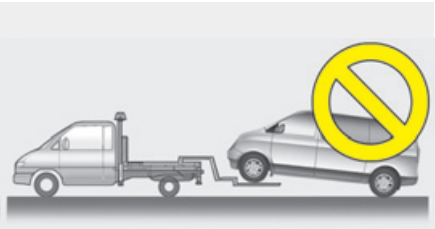

OTQ067012

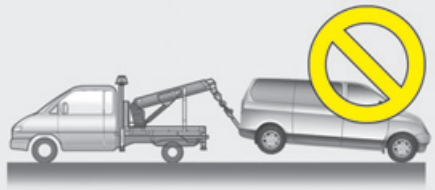

OTQ067010

⚠ CAUTION

- ***Do not tow the vehicle with the rear wheels on the ground as this may cause damage to the vehicle.***
- ***Do not tow with sling-type equipment. Use wheel lift or flatbed equipment.***

When towing your vehicle in an emergency without wheel dollies :

1. Set the ignition switch in the ACC position.
2. Place the transmission shift lever in N (Neutral).
3. Release the parking brake.

⚠ CAUTION

Failure to place the transmission shift lever in N (Neutral) may cause internal damage to the transmission.

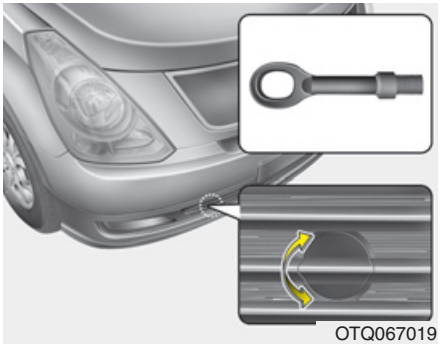

F080200ATQ

Removable towing hook (front, if equipped)

1. Remove the towing hook from the tool case.
2. Remove the hole cover on the front bumper by turning it.

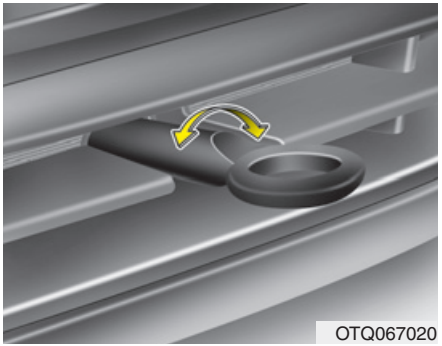

3. Install the towing hook by turning it clockwise into the hole until it is fully secured.
4. Remove the towing hook and install the cover after use.

F080300AEN

Emergency towing

If towing is necessary, we recommend you to have it done by an authorized HYUNDAI dealer or a commercial tow truck service.

If towing service is not available in an emergency, your vehicle may be temporarily towed using a cable or chain secured to the emergency towing hook under the front (or rear) of the vehicle. Use extreme caution when towing the vehicle. A driver must be in the vehicle to steer it and operate the brakes.

Towing in this manner may be done only on hard-surfaced roads for a short distance and at low speeds. Also, the wheels, axles, power train, steering and brakes must all be in good condition.

- Do not use the tow hooks to pull a vehicle out of mud, sand or other conditions from which the vehicle cannot be driven out under its own power.
- Avoid towing a vehicle heavier than the vehicle doing the towing.
- The drivers of both vehicles should communicate with each other frequently.

⚠ CAUTION

- ***Attach a towing strap to the tow hook.***
- ***Using a portion of the vehicle other than the tow hooks for towing may damage the body of your vehicle.***
- ***Use only a cable or chain specifically intended for use in towing vehicles. Securely fasten the cable or chain to the towing hook provided.***

- Before emergency towing, check that the hook is not broken or damaged.
- Fasten the towing cable or chain securely to the hook.
- Do not jerk the hook. Apply steady and even force.
- To avoid damaging the hook, do not pull from the side or at a vertical angle. Always pull straight ahead.

⚠ WARNING

Use extreme caution when towing the vehicle.

- **Avoid sudden starts or erratic driving maneuvers which would place excessive stress on the emergency towing hook and towing cable or chain. The hook and towing cable or chain may break and cause serious injury or damage.**
- **If the disabled vehicle is unable to be moved, do not forcibly continue the towing. Contact an authorized HYUNDAI dealer or a commercial tow truck service for assistance.**
- **Tow the vehicle as straight ahead as possible.**
- **Keep away from the vehicle during towing.**

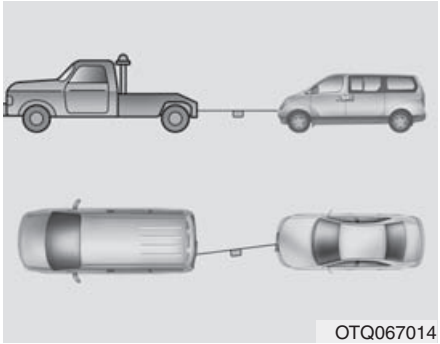

- Use a towing strap less than 5 m (16 feet) long. Attach a white or red cloth (about 30 cm (12 inches) wide) in the middle of the strap for easy visibility.
- Drive carefully so that the towing strap is not loosened during towing.

F080301BUN

Emergency towing precautions

- Turn the ignition switch to ACC so the steering wheel isn't locked.
- Place the transmission shift lever in N (Neutral).
- Release the parking bake.
- Press the brake pedal with more force than normal since you will have reduced brake performance.
- More steering effort will be required because the power steering system will be disabled.
- If you are driving down a long hill, the brakes may overheat and brake performance will be reduced. Stop often and let the brakes cool off.

⚠ CAUTION - Automatic transmission

- *If the car is being towed with all four wheels on the ground, it can be towed only from the front. Be sure that the transmission is in neutral. Be sure the steering is unlocked by placing the ignition switch in the ACC position. A driver must be in the towed vehicle to operate the steering and brakes.*
- *To avoid serious damage to the automatic transmission, limit the vehicle speed to 15 km/h (10 mph) and drive less than 1.5 km (1 mile) when towing.*
- *Before towing, check the automatic transmission fluid leak under your vehicle. If the automatic transmission fluid is leaking, a flatbed equipment or towing dolly must be used.*

F080400AUN

Tie-down hook (for flatbed towing)

⚠ WARNING

Do not use the hooks under the front (or rear) of the vehicle for towing purposes. These hooks are designed ONLY for transport tie-down. If the tie-down hooks are used for towing, the tie-down hooks or front bumper will be damaged and this could lead to serious injury.

EMERGENCY COMMODITY (IF EQUIPPED)

F110000AUN

There are some emergency commodities in the vehicle to help you respond to the emergency situation.

F110100AUN

Fire extinguisher

If there is small fire and you know how to use the fire extinguisher, take the following steps carefully.

1. Pull the pin at the top of the extinguisher that keeps the handle from being accidentally pressed.
2. Aim the nozzle toward the base of the fire.
3. Stand approximately 2.5 m (8 ft) away from the fire and squeeze the handle to discharge the extinguisher. If you release the handle, the discharge will stop.
4. Sweep the nozzle back and forth at the base of the fire. After the fire appears to be out, watch it carefully since it may re-ignite.

F110200AUN

First aid kit

There are some items such as scissors, bandage and adhesive tape and etc. in the kit to give first aid to an injured person.

F110300AUN

Triangle reflector

Place the triangle reflector on the road to warn oncoming vehicles during emergencies, such as when the vehicle is parked by the roadside due to any problems.

F110400AUN

Tire pressure gauge (If equipped)

Tires normally lose some air in day-to-day use, and you may have to add a few pounds of air periodically and it is not usually a sign of a leaking tire, but of normal wear. Always check tire pressure when the tires are cold because tire pressure increases with temperature.

To check the tire pressure, take the following steps;

1. Unscrew the inflation valve cap that is located on the rim of the tire.
2. Press and hold the gauge against the tire valve. Some air will escape as you begin and more will escape if you don't press the gauge in firmly.
3. A firm non-leaking push will activate the gauge.
4. Read the tire pressure on the gauge to know whether the tire pressure is low or high.
5. Adjust the tire pressures to the specified pressure. Refer to “Tires and wheels” in section 9.
6. Reinstall the inflation valve cap.

Engine compartment / 7-2
Maintenance services / 7-4
Owner maintenance / 7-6
Scheduled maintenance service / 7-7
Explanation of scheduled maintenance items / 7-22
Engine oil / 7-25
Engine coolant / 7-26
Brakes and clutch fluid / 7-28
Power steering fluid / 7-29
Automatic transmission fluid / 7-30
Washer fluid / 7-32
Parking brake / 7-33
Fuel filter / 7-33
Air cleaner / 7-34
Climate control air filter / 7-35
Wiper blades / 7-37
Battery / 7-39

Maintenance

7

Tires and wheels / 7-42
Fuses / 7-51
Light bulbs / 7-60
Appearance care / 7-67
Emission control system / 7-72

ENGINE COMPARTMENT

■ **Diesel Engine**

4D56

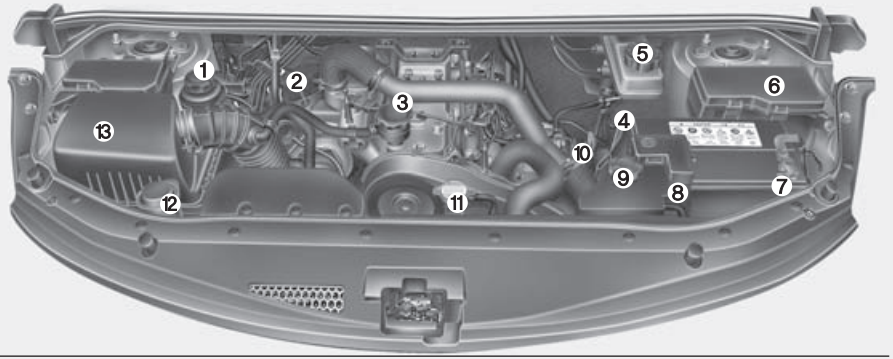

A2.5/A2 2.5

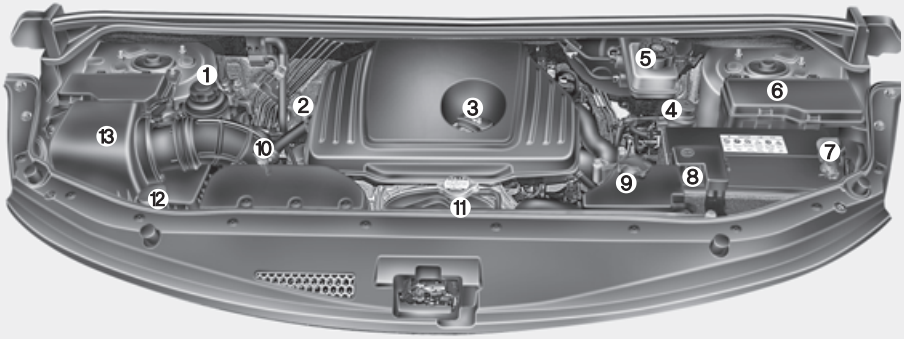

1. Power steering fluid reservoir
2. Automatic transmission fluid dipstick (if equipped)
3. Engine oil filler cap
4. Fuel filter
5. Brake fluid reservoir
6. Fuse box
7. Negative battery terminal
8. Positive battery terminal
9. Engine coolant reservoir
10. Engine oil dipstick
11. Radiator cap
12. Windshield washer fluid reservoir
13. Air cleaner

❊ The actual engine room in the vehicle may differ from the illustration.

OTQ077001/OTQ027003

■ **Gasoline Engine**

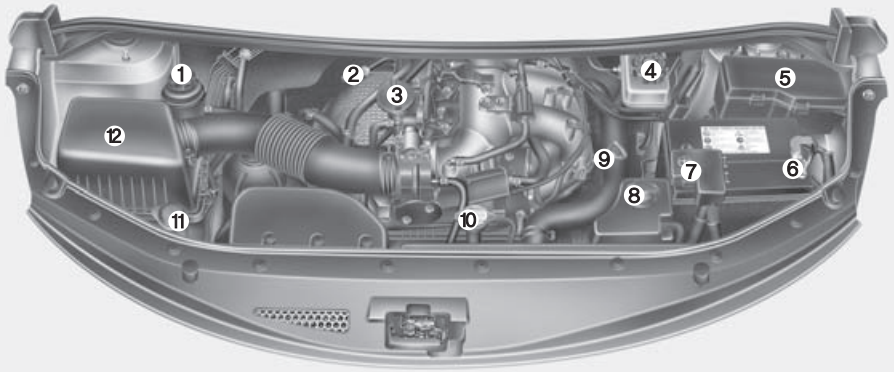

1. Power steering fluid reservoir
2. Automatic transmission fluid dipstick (if equipped)
3. Engine oil filler cap
4. Brake fluid reservoir
5. Fuse box
6. Negative battery terminal
7. Positive battery terminal
8. Engine coolant reservoir
9. Engine oil dipstick
10. Radiator cap
11. Windshield washer fluid reservoir
12. Air cleaner

❊ The actual engine room in the vehicle may differ from the illustration.

OTQ077066

MAINTENANCE SERVICES

G020000AEN

You should exercise the utmost care to prevent damage to your vehicle and injury to yourself whenever performing any maintenance or inspection procedures.

Should you have any doubts concerning the inspection or servicing of your vehicle, we strongly recommend that you have an authorized HYUNDAI dealer perform this work.

An authorized HYUNDAI dealer has factory-trained technicians and genuine HYUNDAI parts to service your vehicle properly. For expert advice and quality service, see an authorized HYUNDAI dealer.

Inadequate, incomplete or insufficient servicing may result in operational problems with your vehicle that could lead to vehicle damage, an accident, or personal injury.

G020100AEN

Owner’s responsibility

✻ NOTICE

Maintenance Service and Record Retention are the owner's responsibility.

You should retain documents that show proper maintenance has been performed on your vehicle in accordance with the scheduled maintenance service charts shown on the following pages. You need this information to establish your compliance with the servicing and maintenance requirements of your vehicle warranties.

Detailed warranty information is provided in your Service Passport.

Repairs and adjustments required as a result of improper maintenance or a lack of required maintenance are not covered.

We recommend you have your vehicle maintained and repaired by an authorized HYUNDAI dealer. An authorized HYUNDAI dealer meets HYUNDAI’s high service quality standards and receives technical support from HYUNDAI in order to provide you with a high level of service satisfaction.

G020200AEN

Owner maintenance precautions

Improper or incomplete service may result in problems. This section gives instructions only for the maintenance items that are easy to perform.

As explained earlier in this section, several procedures can be done only by an authorized HYUNDAI dealer with special tools.

✻ NOTICE

Improper owner maintenance during the warranty period may affect warranty coverage. For details, read the separate Service Passport provided with the vehicle. If you're unsure about any servicing or maintenance procedure, have it done by an authorized HYUNDAI dealer.

⚠ WARNING - Maintenance work

- **Performing maintenance work on a vehicle can be dangerous. You can be seriously injured while performing some maintenance procedures. If you lack sufficient knowledge and experience or the proper tools and equipment to do the work, have it done by an authorized HYUNDAI dealer.**
- **Working under the hood with the engine running is dangerous. It becomes even more dangerous when you wear jewelry or loose clothing. These can become entangled in moving parts and result in injury. Therefore, if you must run the engine while working under the hood, make certain that you remove all jewelry (especially rings, bracelets, watches, and necklaces) and all neckties, scarves, and similar loose clothing before getting near the engine or cooling fans.**

G020300ATQ

⚠ WARNING - Diesel Engine

Never work on injection system with engine running or within 30 seconds after shutting off engine. High-pressure pump, rail, injectors and high-pressure pipes are subject to high pressure even after the engine stopped. The fuel jet produced by fuel leaks may cause serious injury, if it touches the body. People using pacemakers should not move than 30cm closer to the ECU or wiring harness within the engine room while engine is running, since the high currents in the electronic engine control system produce considerable magnetic fields.

OWNER MAINTENANCE

G030000AEN

The following lists are vehicle checks and inspections that should be performed by the owner or an authorized HYUNDAI dealer at the frequencies indicated to help ensure safe, dependable operation of your vehicle.

Any adverse conditions should be brought to the attention of your dealer as soon as possible.

These Owner Maintenance Checks are generally not covered by warranties and you may be charged for labor, parts and lubricants used.

Owner maintenance schedule

G030101AUN

When you stop for fuel:

- Check the engine oil level.
- Check coolant level in coolant reservoir.
- Check the windshield washer fluid level.
- Look for low or under-inflated tires.

⚠ WARNING

Be careful when checking your engine coolant level when the engine is hot. Scalding hot coolant and steam may blow out under pressure. This could cause burns or other serious injury.

G030102AUN

While operating your vehicle:

- Note any changes in the sound of the exhaust or any smell of exhaust fumes in the vehicle.
- Check for vibrations in the steering wheel. Notice any increased steering effort or looseness in the steering wheel, or change in its straight-ahead position.
- Notice if your vehicle constantly turns slightly or “pulls” to one side when traveling on smooth, level road.
- When stopping, listen and check for unusual sounds, pulling to one side, increased brake pedal travel or “hard-to-push” brake pedal.
- If any slipping or changes in the operation of your transmission occurs, check the transmission fluid level.
- Check automatic transmission P (Park) function.
- Check parking brake.
- Check for fluid leaks under your vehicle (water dripping from the air conditioning system during or after use is normal).

G030103AUN

At least monthly:

- Check coolant level in the engine coolant reservoir.
- Check the operation of all exterior lights, including the stoplights, turn signals and hazard warning flashers.
- Check the inflation pressures of all tires including the spare.

G030104AUN

At least twice a year (i.e., every Spring and Fall):

- Check radiator, heater and air conditioning hoses for leaks or damage.
- Check windshield washer spray and wiper operation. Clean wiper blades with clean cloth dampened with washer fluid.
- Check headlight alignment.
- Check muffler, exhaust pipes, shields and clamps.
- Check the lap/shoulder belts for wear and function.
- Check for worn tires and loose wheel lug nuts.

G030105AUN-EU

At least once a year:

- Clean body and door drain holes.
- Lubricate door hinges and checks, and hood hinges.
- Lubricate door and hood locks and latches.
- Lubricate door rubber weatherstrips.
- Check the air conditioning system.
- Check the power steering fluid level.
- Inspect and lubricate automatic transmission linkage and controls.
- Clean battery and terminals.
- Check the brake fluid level.

SCHEDULED MAINTENANCE SERVICE

G040000AUN

Follow Normal Maintenance Schedule if the vehicle is usually operated where none of the following conditions apply. If any of the following conditions apply, follow Maintenance Under Severe Usage Conditions.

- Repeated short distance driving.
- Driving in dusty conditions or sandy areas.
- Extensive use of brakes.
- Driving in areas where salt or other corrosive materials are being used.
- Driving on rough or muddy roads.
- Driving in mountainous areas.
- Extended periods of idling or low speed operation.
- Driving for a prolonged period in cold temperatures and/or extremely humid climates.
- More than 50% driving in heavy city traffic during hot weather above 32°C (90°F).

If your vehicle is operated under the above conditions, you should inspect, replace or refill more frequently than the following Normal Maintenance Schedule. After the periods or distance shown in the chart, continue to follow the prescribed maintenance intervals.

G040100GTQ

NORMAL MAINTENANCE SCHEDULE (EXCEPT FOR EUROPE A2.5/A2 2.5 DIESEL ENGINE)

MAINTENANCE ITEM \ MAINTENANCE INTERVALS			Number of months or driving distance, whichever comes first							
		Months	12	24	36	48	60	72	84	96
		Miles×1,000	10	20	30	40	50	60	70	80
		Km×1,000	15	30	45	60	75	90	105	120
Drive belts *1	Diesel		At first, inspect 80,000 km (50,000 miles) or 48 months after that, inspect every 20,000 km (12,500 miles) or 12 months							
	Gasoline	For Europe	At first, inspect 90,000 km (60,000 miles) or 72 months after that, inspect every 30,000 km (20,000 miles) or 24 months							
		Except Europe		I		I		I		I
Engine oil and engine oil filter *2	4D56 Diesel		Replace every 5,000 km (3,000 miles) or 6 months *a							
	A2.5/A2 2.5 Diesel	Except Europe	Replace every 10,000 km (6,000 miles) or 12 months							
	Gasoline	For Middle East	Replace every 10,000 km (6,250 miles) or 12 months *b							
		Except Middle East	R	R	R	R	R	R	R	R

I : Inspect and if necessary, adjust, correct, clean or replace.

R : Replace or change.

*1 : Adjust alternator and power steering (and water pump drive belt) and air conditioner drive belt (if equipped). Inspect and if necessary correct or replace.

*2 : Check the engine oil level and leak every 500 km (350 miles) or before starting a long trip.

*a : Republic of South Africa (If the vehicle is lubricated API CH-4 grade or above) - For every 7,500 km or 6 months, whichever occurs first : “R”

*b : Driving in summer season temperature over 40°C (104°F - SAUDI, UAE, OMAN, KUWAIT, BAHRAIN, QATAR, IRAN, YEMEN ETC) or driving over 170 km/h (106 mile/h) must conform the severe driving condition.

NORMAL MAINTENANCE SCHEDULE (EXCEPT FOR EUROPE A2.5/A2 2.5 DIESEL ENGINE) (CONT.)

MAINTENANCE ITEM		MAINTENANCE INTERVALS	Number of months or driving distance, whichever comes first							
		Months	**12**	**24**	**36**	**48**	**60**	**72**	**84**	**96**
		Miles×1,000	**10**	**20**	**30**	**40**	**50**	**60**	**70**	**80**
		Km×1,000	**15**	**30**	**45**	**60**	**75**	**90**	**105**	**120**
Fuel additives *3	Gasoline	For Europe	Add every 15,000 km (10,000 miles) or 12 months							
		Except Europe	Every 5,000 km (3,000 miles) or 6 months							
Valve clearance		4D56 Diesel	I	I	I	I	I	I	I	I
Timing belt		4D56 Diesel			I		R			
Air cleaner filter	For China, India, Middle East		R	R	R	R	R	R	R	R
	Except China, India, Middle East		I	I	R	I	I	R	I	I
Spark plug	Gasoline	Unleaded	Replace every 100,000 km (62,500 miles)							
		Leaded	Replace every 40,000 km (25,000 miles)							

I : Inspect and if necessary, adjust, correct, clean or replace.

R : Replace or change.

*3 : If good quality gasolines meet Europe Fuel standards (EN228) or equivalents including fuel additives is not available, one bottle of additive is recommended. Additives are available from your authorized HYUNDAI dealer along with information on how to use them. Do not mix other additives.

NORMAL MAINTENANCE SCHEDULE (EXCEPT FOR EUROPE A2.5/A2 2.5 DIESEL ENGINE) (CONT.)

MAINTENANCE ITEM \ MAINTENANCE INTERVALS			Number of months or driving distance, whichever comes first							
		Months	12	24	36	48	60	72	84	96
		Miles×1,000	10	20	30	40	50	60	70	80
		Km×1,000	15	30	45	60	75	90	105	120
Vapor hose and fuel filler cap						I				I
Vacuum and crankcase ventilation hoses		Gasoline		I		I		I		I
Vacuum hose (for EGR & throttle body) (if equipped)			I	I	I	I	I	I	I	I
Vacuum pump and vaccum hose		Diesel	I	I	I	I	I	I	I	I
Vaccum pump oil hose		Diesel	I	I	I	I	I	I	I	I
Fuel filter cartridge *4	Diesel	For Europe		I		R		I		R
		Except Europe*5		I		R		I		R

I : Inspect and if necessary, adjust, correct, clean or replace.

R : Replace or change.

*4 : This maintenance schedule depends on fuel quality. It is applicable only when using a qualified fuel < "EN590 or equivalent">. If the diesel fuel specification doesn't meet the EN590, it must be replaced more frequently. If there are some important safety matters like fuel flow restriction, surging, loss of power, hard starting problem etc, replace the fuel filter immediately regardless of maintenance schedule and consult an authorized HYUNDAI dealer for details.

*5 : If the diesel fuel specification doesn't meet the EN590, it must be replaced more frequently. HYUNDAI recommends "every 7,500 km (5,000 miles) inspection, every 15,000 km (10,000 miles) replacement".

NORMAL MAINTENANCE SCHEDULE (EXCEPT FOR EUROPE A2.5/A2 2.5 DIESEL ENGINE) (CONT.)

MAINTENANCE INTERVALS / MAINTENANCE ITEM			Number of months or driving distance, whichever comes first							
		Months	12	24	36	48	60	72	84	96
		Miles×1,000	10	20	30	40	50	60	70	80
		Km×1,000	15	30	45	60	75	90	105	120
Fuel filter *6	Gasoline	For Europe				I				I
		Except Europe		I		R		I		R
Fuel lines, hoses and connections	Diesel			I		I		I		I
	Gasoline					I				I
Cooling system			Inspect “Coolant level and leak” every day Inspect “Water pump” when replacing the drive belt or timing belt							
Engine coolant *7		For Europe	At first, replace at 210,000 km (120,000 miles) or 10 years: after that, replace every 30,000 km (20,000 miles) or 24 months *8							
		Except Europe	At first, replace at 200,000 km (120,000 miles) or 10 years: after that, replace every 40,000 km (25,000 miles) or 24 months *8							

I : Inspect and if necessary, adjust, correct, clean or replace.

R : Replace or change.

*6 : The fuel filter is considered to be maintenance free but periodic inspection is recommended for this maintenance schedule depends on fuel quality. If there are some important safety matters like fuel flow restriction, surging, loss of power, hard starting problem etc, replace the fuel filter immediately regardless of maintenance schedule and consult an authorized HYUNDAI dealer for details.

*7 : When adding coolant, use only deionized water or soft water for your vehicle and never mix hard water in the coolant filled at the factory. An improper coolant mixture can result in serious malfunction or engine damage.

*8 : For your convenience, it can be replaced prior to it's interval when you do maintenance of other items.

NORMAL MAINTENANCE SCHEDULE (EXCEPT FOR EUROPE A2.5/A2 2.5 DIESEL ENGINE) (CONT.)

MAINTENANCE INTERVALS / MAINTENANCE ITEM	Number of months or driving distance, whichever comes first								
	Months	**12**	**24**	**36**	**48**	**60**	**72**	**84**	**96**
	Miles×1,000	**10**	**20**	**30**	**40**	**50**	**60**	**70**	**80**
	Km×1,000	**15**	**30**	**45**	**60**	**75**	**90**	**105**	**120**
Battery condition		Inspect every 12,000 km (8,000 miles) or 6 months							
Brake lines, hoses and connections		I	I	I	I	I	I	I	I
Brake pedal			I		I		I		I
Parking brake			I		I		I		I
Brake fluid		I	I	I	I	I	I	I	I
Disc brakes and pads		I	I	I	I	I	I	I	I
Power steering fluid and hoses		I	I	I	I	I	I	I	I

I : Inspect and if necessary, adjust, correct, clean or replace.
R : Replace or change.

NORMAL MAINTENANCE SCHEDULE (EXCEPT FOR EUROPE A2.5/A2 2.5 DIESEL ENGINE)

MAINTENANCE INTERVALS / MAINTENANCE ITEM	Number of months or driving distance, whichever comes first								
	Months	12	24	36	48	60	72	84	96
	Miles×1,000	10	20	30	40	50	60	70	80
	Km×1,000	15	30	45	60	75	90	105	120
Steering gear rack, linkage and boots		I	I	I	I	I	I	I	I
Propeller shaft			I		I		I		I
Tire (pressure & tread wear)		I	I	I	I	I	I	I	I
Front suspension ball joints		I	I	I	I	I	I	I	I
Bolt and nuts on chassis and body		I	I	I	I	I	I	I	I
Air conditioner refrigerant (if equipped)		I	I	I	I	I	I	I	I
Air conditioner compressor (if equipped)		I	I	I	I	I	I	I	I
Climate control air filter (if equipped)		R	R	R	R	R	R	R	R
Manual transmission fluid (if equipped)					I				I
Automatic transmission fluid (if equipped)					I				I
Rear axle oil *9			I		I		I		I

I : Inspect and if necessary, adjust, correct, clean or replace.
R : Replace or change.
*9 : Rear axle oil should be changed anytime they have been submerged in water.

NORMAL MAINTENANCE SCHEDULE (FOR EUROPE A2.5 DIESEL ENGINE) (CONT.)

MAINTENANCE INTERVALS / MAINTENANCE ITEM	Number of months or driving distance, whichever comes first								
	Months	12	24	36	48	60	72	84	96
	Miles×1,000	12.5	25	37.5	50	62.5	75	87.5	100
	Km×1,000	20	40	60	80	100	120	140	160
Drive Belts *1	At first, inspect 80,000 km (50,000 miles) or 48 months after that, inspect every 20,000 km (12,500 miles) or 12 months								
Engine oil and engine oil filter *2	R	R	R	R	R	R	R	R
Air cleaner filter	I	R	I	R	I	R	I	R
Vapor hose and fuel filter cap		I		I		I		I
Vacuum hose (for EGR & throttle body) (if equipped)	I	I	I	I	I	I	I	I
Vacuum pump and vacuum hose	I	I	I	I	I	I	I	I
Vacuum pump oil hose	I	I	I	I	I	I	I	I
Fuel Filter Cateridge *3	I	I	R	I	I	R	I	I
Fuel line hoses and connections	I	I	I	I	I	I	I	I

I : Inspect and if necessary, adjust, correct, clean or replace.

R : Replace or change.

*1 : Adjust alternator and power steering (and water pump drive belt) and air conditioner drive belt (if equipped). Inspect and if necessary correct or replace.

*2 : Check the engine oil level and leak every 500 km (350 miles) or before starting a long trip.

*3 : This maintenance schedule depends on fuel quality. It is applicable only when using a qualified fuel < "EN590 or equivalent">. If the diesel fuel specification doesn't meet the EN590, it must be replaced more frequently. If there are some important safety matters like fuel flow restriction, surging, loss of power, hard starting problem etc, replace the fuel filter immediately regardless of maintenance schedule and consult an authorized HYUNDAI dealer for details.

NORMAL MAINTENANCE SCHEDULE (FOR EUROPE A2.5 DIESEL ENGINE) (CONT.)

MAINTENANCE INTERVALS / MAINTENANCE ITEM	Number of months or driving distance, whichever comes first								
	Months	12	24	36	48	60	72	84	96
	Miles×1,000	12.5	25	37.5	50	62.5	75	87.5	100
	Km×1,000	20	40	60	80	100	120	140	160
Cooling system	Inspect "Coolant level and leak" every day Inspect "Water pump" when replacing the drive belt or timing belt								
Engine coolant *4	At first, replace at 210,000 km (120,000 miles) or 10 years : after that, replace every 30,000 km (20,000 miles) or 24 months *5								
Battery Condition	Inspect every 12,000 km (8,000 miles) or 6 months								
Brake lines, hoses and connections	I	I	I	I	I	I	I	I
Brake pedal		I		I		I		I
Parking brake		I		I		I		I
Brake/Clutch fluid	I	R	I	R	I	R	I	R
Disc brakes and pads	I	I	I	I	I	I	I	I
Power steering fluid and hoses	I	I	I	I	I	I	I	I

I : Inspect and if necessary, adjust, correct, clean or replace.

R : Replace or change.

*4 : When adding coolant, use only deionized water or soft water for your vehicle and never mix hard water in the coolant filled at the factory. An improper coolant mixture can result in serious malfunction or engine damage.

*5 : For your convenience, it can be replaced prior to it's interval when you do maintenance of other items.

NORMAL MAINTENANCE SCHEDULE (FOR EUROPE A2.5 DIESEL ENGINE)

MAINTENANCE INTERVALS / MAINTENANCE ITEM	Number of months or driving distance, whichever comes first								
	Months	12	24	36	48	60	72	84	96
	Miles×1,000	12.5	25	37.5	50	62.5	75	87.5	100
	Km×1,000	20	40	60	80	100	120	140	160
Steering gear rack, linkage and boots		I	I	I	I	I	I	I	I
Propeller shaft			I		I		I		I
Tire (pressure & tread wear)		I	I	I	I	I	I	I	I
Front suspension ball joints		I	I	I	I	I	I	I	I
Bolt and nuts on chassis and body		I	I	I	I	I	I	I	I
Air conditioner refrigerant (if equipped)		I	I	I	I	I	I	I	I
Air conditioner compressor (if equipped)		I	I	I	I	I	I	I	I
Climate control air filter (if equipped)		R	R	R	R	R	R	R	R
Manual transmission fluid (if equipped)		Inspect every 60,000 km (37,500 miles) or 48months							
Automatic transmission fluid (if equipped)		Inspect every 60,000 km (37,500 miles) or 48months							
Rear axle oil *6			I		I		I		I

I : Inspect and if necessary, adjust, correct, clean or replace.
R : Replace or change.
*6 : Rear axle oil should be changed anytime they have been submerged in water.

G040100ATQ-EU

NORMAL MAINTENANCE SCHEDULE (FOR EUROPE A2 2.5 DIESEL ENGINE) (CONT.)

MAINTENANCE INTERVALS / MAINTENANCE ITEM	Number of months or driving distance, whichever comes first								
	Months	24	48	72	96	120	144	168	192
	Miles×1,000	20	40	60	80	100	120	140	160
	Km×1,000	30	60	90	120	150	180	210	240
Drive Belts *1	At first, inspect 90,000 km (60,000 miles) or 48 months after that, inspect every 30,000 km (20,000 miles) or 24 months								
Engine oil and engine oil filter *2 *3 *4	R	R	R	R	R	R	R	R
Air cleaner filter	I	R	I	R	I	R	I	R
Vapor hose and fuel filter cap		I		I		I		I
Vacuum hose (for EGR & throttle body) (if equipped)	I	I	I	I	I	I	I	I
Vacuum pump and vacuum hose	I	I	I	I	I	I	I	I
Vacuum pump oil hose	I	I	I	I	I	I	I	I
Fuel Filter Cateridge *5	R	R	R	R	R	R	R	R
Fuel line hoses and connections	Inspect every 20,000 km (12,500 miles) or 12months								

I : Inspect and if necessary, adjust, correct, clean or replace.

R : Replace or change.

*1 : Adjust alternator and power steering (and water pump drive belt) and air conditioner drive belt (if equipped). Inspect and if necessary correct or replace.

*2 : Check the engine oil level and leak every 500 km (350 miles) or before starting a long trip. The engine oil level should be checked regularly and maintained properly. Operating with an insufficient amount oil can damage the engine, and such damage is not covered by warranty.

*3 : If the recommended oil is not available, replace engine oil and engine oil filter every 20,000 km (12,500 miles) or 12 months.

*4 : This maintenance schedule depends on fuel quality. It is applicable only when using a qualified fuel <"EN590 or equivalent">. If the diesel fuel specification doesn't meet the EN590, it must be replaced according to the severe maintenance schedule.

*5 : This maintenance schedule depends on fuel quality. It is applicable only when using a qualified fuel < "EN590 or equivalent">. If the diesel fuel specification doesn't meet the EN590, it must be replaced more frequently. If there are some important safety matters like fuel flow restriction, surging, loss of power, hard starting problem etc, replace the fuel filter immediately regardless of maintenance schedule and consult an authorized HYUNDAI dealer for details.

NORMAL MAINTENANCE SCHEDULE (FOR EUROPE A2 2.5 DIESEL ENGINE) (CONT.)

MAINTENANCE INTERVALS / MAINTENANCE ITEM	Number of months or driving distance, whichever comes first								
	Months	**24**	**48**	**72**	**96**	**120**	**144**	**168**	**192**
	Miles×1,000	**20**	**40**	**60**	**80**	**100**	**120**	**140**	**160**
	Km×1,000	**30**	**60**	**90**	**120**	**150**	**180**	**210**	**240**
Cooling system		Inspect "Coolant level and leak" every day Inspect "Water pump" when replacing the drive belt or timing belt							
Engine coolant *6		At first, replace at 210,000 km (120,000 miles) or 120 months : after that, replace every 30,000 km (20,000 miles) or 24 months *7							
Battery Condition		Inspect every 12,000 km (8,000 miles) or 6 months							
Brake lines, hoses and connections		I	I	I	I	I	I	I	I
Brake pedal			I		I		I		I
Parking brake		I	I	I	I	I	I	I	I
Brake/Clutch fluid (if equipped)		R	R	R	R	R	R	R	R
Disc brakes and pads		I	I	I	I	I	I	I	I
Power steering fluid and hoses		I	I	I	I	I	I	I	I

I : Inspect and if necessary, adjust, correct, clean or replace.

R : Replace or change.

*6 : When adding coolant, use only deionized water or soft water for your vehicle and never mix hard water in the coolant filled at the factory. An improper coolant mixture can result in serious malfunction or engine damage.

*7 : For your convenience, it can be replaced prior to it's interval when you do maintenance of other items.

NORMAL MAINTENANCE SCHEDULE (FOR EUROPE A2 2.5 DIESEL ENGINE)

MAINTENANCE INTERVALS / MAINTENANCE ITEM	Number of months or driving distance, whichever comes first								
	Months	**24**	**48**	**72**	**96**	**120**	**144**	**168**	**192**
	Miles×1,000	**20**	**40**	**60**	**80**	**100**	**120**	**140**	**160**
	Km×1,000	**30**	**60**	**90**	**120**	**150**	**180**	**210**	**240**
Steering gear rack, linkage and boots		I	I	I	I	I	I	I	I
Propeller shaft		I	I	I	I	I	I	I	I
Tire (pressure & tread wear)		I	I	I	I	I	I	I	I
Front suspension ball joints		I	I	I	I	I	I	I	I
Bolt and nuts on chassis and body		I	I	I	I	I	I	I	I
Air conditioner refrigerant (if equipped)		I	I	I	I	I	I	I	I
Air conditioner compressor (if equipped)		I	I	I	I	I	I	I	I
Climate control air filter (if equipped)		R	R	R	R	R	R	R	R
Manual transmission fluid (if equipped)			I		I		I		I
Automatic transmission fluid (if equipped)			I		I		I		I
Rear axle oil *8			I		I		I		I

I : Inspect and if necessary, adjust, correct, clean or replace.
R : Replace or change.
*8 : Rear axle oil should be changed anytime they have been submerged in water.

G040200ETQ

MAINTENANCE UNDER SEVERE USAGE CONDITIONS

The following items must be serviced more frequently on cars mainly used under severe driving conditions.
Refer to the chart below for the appropriate maintenance intervals.

R : Replace I : Inspect and if necessary, adjust, correct, clean or replace

Maintenance item			Maintenance operation	Maintenance intervals	Driving condition
Engine oil and engine oil filter	4D56 Diesel		R	Every 3,000 km (1,850 miles) or 6 months	A, B, C, F, G, H, I, J, K, M
	A2.5 Diesel	For Europe	R	Every 10,000 km (6,250 miles) or 6 months	A, B, C, F, G, H, I, J, L, M
		Except Europe	R	Every 5,000 km (3,000 miles) or 6 months	
	A2 2.5 Diesel	For Europe	R	Every 15,000 km (10,000 miles) or 12 months	
	Gasoline	For Middle East	R	Every 5,000 km (3,000 miles) or 6 months	
		Except Middle East	R	Every 7,500 km (5,000 miles) or 6 months	
Air cleaner filter			R	Replace more frequently depending on the condition	C, E
Engine timing belt		4D56 Diesel	R	Every 60,000 km (40,000 miles) or 48 months	D, E, F, G
Manual transmission fluid (if equipped)			R	Every 120,000 km (80,000 miles)	C, D, E, G, H, I, L
Automatic transmission fluid (if equipped)		For Europe	R	Every 90,000 km (60,000 miles)	A, C, D, E, F, G, H, I, L
		Except Europe	R	Every 100,000 km (62,000 miles)	
Rear axle oil	4D56 Diesel / Gasoline		R	Every 90,000 km (60,000 miles)	C, E, G, H, I, L
	A2.5 Diesel	For Europe	R	Every 80,000 km (50,000 miles)	
		Except Europe	R	Every 90,000 km (60,000 miles)	
	A2 2.5 Diesel	For Europe	R	Every 80,000 km (50,000 miles)	

Maintenance item			Maintenance operation	Maintenance intervals	Driving condition
Steering gear rack, linkage and boots			I	Inspect more frequently depending on the condition	C, D, E, F, G
Propeller shaft	4D56 Diesel / Gasoline		I	Every 15,000 km (10,000 miles) or 12 months	C, E
	A2.5 Diesel	For Europe	I	Every 20,000 km (12,500 miles) or 12 months	
		Except Europe	I	Every 15,000 km (10,000 miles) or 12 months	
	A2 2.5 Diesel	For Europe	I	Every 20,000 km (12,500 miles) or 12 months	
Front suspension ball joints			I	Inspect more frequently depending on the condition	C, D, E, F, G
Disc brakes and pads, calipers and rotors			I	Inspect more frequently depending on the condition	C, D, E, G, H
Parking brake			I	Inspect more frequently depending on the condition	C, D, G, H
Climate control air filter (if equipped)			R	Replace more frequently depending on the condition	C, E, G

Severe driving conditions

A : Repeated short distance driving
B : Extensive idling
C : Driving in dusty, rough roads
D : Driving in areas using salt or other corrosive materials or in very cold weather
E : Driving in sandy areas
F : More than 50 % driving in heavy city traffic during hot weather above 32°C (90°F)
G : Driving on uphill, downhill or mountain roads
H : Towing a trailer or using a camper on roof rack (if equipped)
I : Driving for patrol car, taxi, commercial car or vehicle towing
J : Driving in very cold weather
K : Driving over 140 km/h (87 mile/h)
L : Driving over 170 km/h (106 mile/h)
M : Frequently driving in stop - and - go conditions

EXPLANATION OF SCHEDULED MAINTENANCE ITEMS

G050100AUN

Engine oil and filter

The engine oil and filter should be changed at the intervals specified in the maintenance schedule. If the car is being driven in severe conditions, more frequent oil and filter changes are required.

G050200AUN

Drive belts

Inspect all drive belts for evidence of cuts, cracks, excessive wear or oil saturation and replace if necessary. Drive belts should be checked periodically for proper tension and adjusted as necessary.

G050300ATQ

Fuel filter (cartridge)

A clogged filter can limit the speed at which the vehicle may be driven, damage the emission system and cause multiple issues such as hard starting. If an excessive amount of foreign matter accumulates in the fuel tank, the filter may require replacement more frequently.

After installing a new filter, run the engine for several minutes, and check for leaks at the connections. Fuel filters should be installed by an authorized HYUNDAI dealer.

⚠ CAUTION

In case the fuel filter is clogged due to not conforming to the maintenance period, the fuel injection equipment may supply the fuel insufficiently, which may damage the fuel injection equipment and cause the engine to stall at worst cases.

G050400AEN

Fuel lines, fuel hoses and connections

Check the fuel lines, fuel hoses and connections for leakage and damage. Have an authorized HYUNDAI dealer replace any damaged or leaking parts immediately.

⚠ WARNING - Diesel only

Never work on injection system with engine running or within 30 seconds after shutting off engine. High pressure pump, rail, injectors and high pressure pipes are subject to high pressure even after the engine stopped. The fuel jet produced by fuel leaks may cause serious injury, if it touch the body. People using pacemakers should not move than 30cm closer to the ECU or wiring harness within the engine room while engine is running, since the high currents in the Common Rail system produce considerable magnetic fields.

G050600AUN

Vapor hose and fuel filler cap

The vapor hose and fuel filler cap should be inspected at those intervals specified in the maintenance schedule. Make sure that a new vapor hose or fuel filler cap is correctly replaced.

G050700AUN

Vacuum crankcase ventilation hoses (if equipped)

Inspect the surface of hoses for evidence of heat and/or mechanical damage. Hard and brittle rubber, cracking, tears, cuts, abrasions, and excessive swelling indicate deterioration. Particular attention should be paid to examine those hose surfaces nearest to high heat sources, such as the exhaust manifold.

Inspect the hose routing to assure that the hoses do not come in contact with any heat source, sharp edges or moving component which might cause heat damage or mechanical wear. Inspect all hose connections, such as clamps and couplings, to make sure they are secure, and that no leaks are present. Hoses should be replaced immediately if there is any evidence of deterioration or damage.

G050800AEN

Air cleaner filter

A Genuine HYUNDAI air cleaner filter is recommended when the filter is replaced.

G050900AUN

Spark plugs (for gasoline engine)

Make sure to install new spark plugs of the correct heat range.

G051000AEN

Valve clearance (if equipped)

Inspect excessive valve noise and/or engine vibration and adjust if necessary. An authorized HYUNDAI dealer should perform the operation.

G051100AUN

Cooling system

Check cooling system components, such as radiator, coolant reservoir, hoses and connections for leakage and damage. Replace any damaged parts.

G051200AUN

Coolant

The coolant should be changed at the intervals specified in the maintenance schedule.

G051300AUN

Manual transmission fluid (if equipped)

Inspect the manual transmission fluid according to the maintenance schedule.

G051400ATQ

Automatic transmission fluid (if equipped)

The fluid level should be in the "HOT" range of the dipstick, after the engine and transmission are at normal operating temperature. Check the automatic transmission fluid level with the engine running and the transmission in neutral, with the parking brake properly applied.

✻ NOTICE

If your vehicle is not equipped with the automatic transmission level gauge, have the automatic transmission fluid inspected by an authorized HYUNDAI dealer according to the maintenance schedule.

G051500AUN

Brake hoses and lines

Visually check for proper installation, chafing, cracks, deterioration and any leakage. Replace any deteriorated or damaged parts immediately.

G051600AUN

Brake fluid

Check brake fluid level in the brake fluid reservoir. The level should be between “MIN” and “MAX” marks on the side of the reservoir. Use only hydraulic brake fluid conforming to DOT 3 or DOT 4 specification.

G051700ATQ

Parking brake

Inspect the parking brake system including the parking brake lever and cables.

G051900AGD

Brake discs, pads, calipers and rotors

Check the pads for excessive wear, discs for run out and wear, and calipers for fluid leakage.

For more information on checking the pads or lining wear limit, refer to the HYUNDAI web site.

(**http://brakemanual.hmc.co.kr**)

G052100AUN

Suspension mounting bolts

Check the suspension connections for looseness or damage. Retighten to the specified torque.

G052200AUN

Steering gear box, linkage & boots/lower arm ball joint

With the vehicle stopped and engine off, check for excessive free-play in the steering wheel.

Check the linkage for bends or damage. Check the dust boots and ball joints for deterioration, cracks, or damage. Replace any damaged parts.

G052300AEN

Power steering pump, belt and hoses

Check the power steering pump and hoses for leakage and damage. Replace any damaged or leaking parts immediately. Inspect the power steering belt (or drive belt) for evidence of cuts, cracks, excessive wear, oiliness and proper tension. Replace or adjust it if necessary.

G052500AUN

Air conditioning refrigerant (if equipped)

Check the air conditioning lines and connections for leakage and damage.

ENGINE OIL

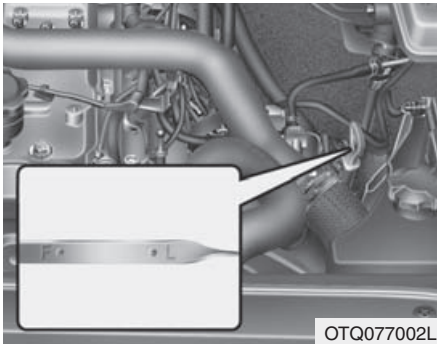

OTQ077002L

G060100BEN

Checking the engine oil level

1. Be sure the vehicle is on level ground.
2. Start the engine and allow it to reach normal operating temperature.
3. Turn the engine off and wait for a few minutes (about 5 minutes) for the oil to return to the oil pan.
4. Pull the dipstick out, wipe it clean, and re-insert it fully.

⚠ WARNING - Radiator hose

Be very careful not to touch the radiator hose when checking or adding the engine oil as it may be hot enough to burn you.

5. Pull the dipstick out again and check the level. The level should be between F and L.

⚠ CAUTION

- ***Do not overfill with engine oil. Engine damage may result.***
- ***Do not spill engine oil, when adding or changing engine oil. If you drop the engine oil on the engine room, wipe it off immediately.***

⚠ CAUTION - Diesel engine

Overfilling the engine oil may cause severe dieseling due to churning effect. It may lead to engine damage accompanied with abrupt engine speed increment, combustion noise and white smoke emission.

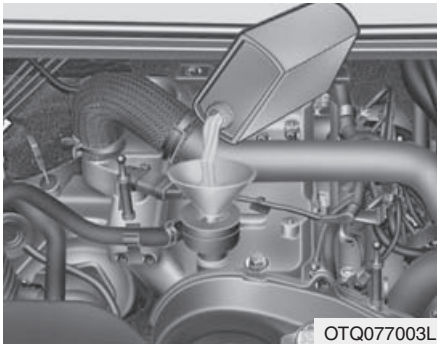
OTQ077003L

If it is near or at L, add enough oil to bring the level to F. **Do not overfill.**

Use a funnel to help prevent oil from being spilled on engine components.

Use only the specified engine oil. (Refer to "Recommended lubricants and capacities" in section 9.)

G060200AEN

Changing the engine oil and filter

Have engine oil and filter changed by an authorized HYUNDAI dealer according to the Maintenance Schedule at the beginning of this section.

⚠ WARNING

Used engine oil may cause irritation or cancer of the skin if left in contact with the skin for prolonged periods of time. Used engine oil contains chemicals that have caused cancer in laboratory animals. Always protect your skin by washing your hands thoroughly with soap and warm water as soon as possible after handling used oil.

ENGINE COOLANT

G070000AUN

The high-pressure cooling system has a reservoir filled with year-round antifreeze coolant. The reservoir is filled at the factory. Check the antifreeze protection and coolant level at least once a year, at the beginning of the winter season, and before traveling to a colder climate.

G070100BEN

Checking the coolant level

⚠ WARNING

Removing radiator cap

- **Never attempt to remove the radiator cap while the engine is operating or hot. Doing so might lead to cooling system and engine damage and could result in serious personal injury from escaping hot coolant or steam.**
- **Turn the engine off and wait until it cools down. Use extreme care when removing the radiator cap. Wrap a thick towel around it, and turn it counterclockwise slowly to the first stop.**

(Continued)

(Continued)

Step back while the pressure is released from the cooling system. When you are sure all the pressure has been released, press down on the cap, using a thick towel, and continue turning counterclockwise to remove it.

- **Even if the engine is not operating, do not remove the radiator cap or the drain plug while the engine and radiator are hot. Hot coolant and steam may still blow out under pressure, causing serious injury.**

⚠ WARNING

The electric motor (cooling fan) is controlled by engine coolant temperature, refrigerant pressure and vehicle speed. It may sometimes operate even when the engine is not running. Use extreme caution when working near the blades of the cooling fan so that you are not injured by a rotating fan blades. As the engine coolant temperature decreases, the electric motor will automatically shut off. This is a normal condition.

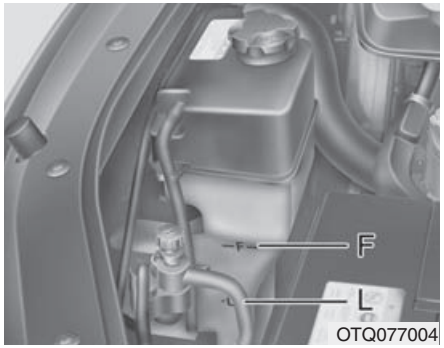

OTQ077004

Check the condition and connections of all cooling system hoses and heater hoses. Replace any swollen or deteriorated hoses.

The coolant level should be filled between F and L marks on the side of the coolant reservoir when the engine is cool.

If the coolant level is low, add enough specified coolant to provide protection against freezing and corrosion. Bring the level to F, but do not overfill. If frequent additions are required, see an authorized HYUNDAI dealer for a cooling system inspection.

G070101BUN

Recommended engine coolant

- When adding coolant, use only deionized water or soft water for your vehicle and never mix hard water in the coolant filled at the factory. An improper coolant mixture can result in serious malfunction or engine damage.
- The engine in your vehicle has aluminum engine parts and must be protected by an ethylene-glycol-based coolant to prevent corrosion and freezing.
- DO NOT USE alcohol or methanol coolant or mix them with the specified coolant.
- Do not use a solution that contains more than 60% antifreeze or less than 35% antifreeze, which would reduce the effectiveness of the solution.

For mixture percentage, refer to the following table.

Ambient Temperature	Mixture Percentage (volume)	
	Antifreeze	Water
-15°C (5°F)	35	65
-25°C (-13°F)	40	60
-35°C (-31°F)	50	50
-45°C (-49°F)	60	40

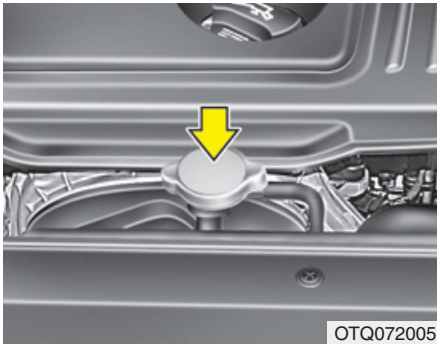
OTQ072005

⚠ WARNING

Radiator cap

Do not remove the radiator cap when the engine and radiator are hot. Scalding hot coolant and steam may blow out under pressure causing serious injury.

G070200AEN

Changing the coolant

Have coolant changed by an authorized HYUNDAI dealer according to the Maintenance Schedule at the beginning of this section.

⚠ CAUTION

Put a thick cloth around the radiator cap before refilling the coolant in order to prevent the coolant from overflowing into engine parts such as the generator.

⚠ WARNING - Coolant

- **Do not use radiator coolant or antifreeze in the washer fluid reservoir.**
- **Radiator coolant can severely obscure visibility when sprayed on the windshield and may cause loss of vehicle control or damage to paint and body trim.**

BRAKE AND CLUTCH (IF EQUIPPED) FLUID

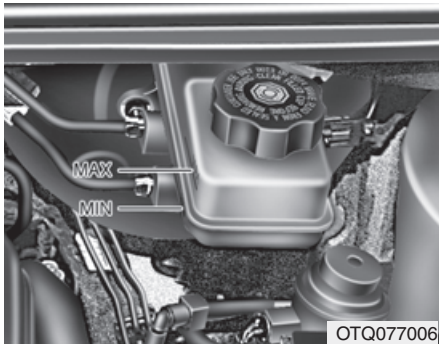

G080100AEN

Checking the brake fluid level

Check the fluid level in the reservoir periodically. The fluid level should be between MAX and MIN marks on the side of the reservoir.

Before removing the reservoir cap and adding brake fluid, clean the area around the reservoir cap thoroughly to prevent brake fluid contamination.

If the level is low, add fluid to the MAX level. The level will fall with accumulated mileage. This is a normal condition associated with the wear of the brake linings. If the fluid level is excessively low, have the brake system checked by an authorized HYUNDAI dealer.

Use only the specified brake fluid. (Refer to "Recommended lubricants or capacities" in section 9.)

Never mix different types of fluid.

⚠ WARNING - Loss of brake fluid

In the event the brake system requires frequent additions of fluid, the vehicle should be inspected by an authorized HYUNDAI dealer.

POWER STEERING FLUID

⚠ WARNING - Brake fluid

When changing and adding brake fluid, handle it carefully. Do not let it come in contact with your eyes. If brake fluid should come in contact with your eyes, immediately flush them with a large quantity of fresh tap water. Have your eyes examined by a doctor as soon as possible.

⚠ CAUTION

Do not allow brake fluid to contact the vehicle's body paint, as paint damage will result. Brake fluid, which has been exposed to open air for an extended time should never be used as its quality cannot be guaranteed. It should be disposed of properly. Don't put in the wrong kind of fluid. A few drops of mineral-based oil, such as engine oil, in your brake system can damage brake system parts.

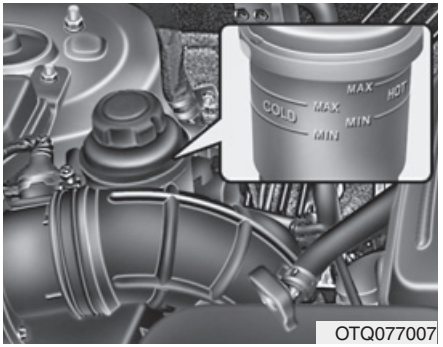

G090100AEN

Checking the power steering fluid level

With the vehicle on level ground, check the fluid level in the power steering reservoir periodically. The fluid should be between MAX and MIN marks on the side of the reservoir at the normal temperature.

Before adding power steering fluid, thoroughly clean the area around the reservoir cap to prevent power steering fluid contamination.

If the level is low, add fluid to the MAX level.

✻ NOTICE

Check that the fluid level is in the "HOT" range on the reservoir. If the fluid is cold, check that it is in the "COLD" range.

In the event the power steering system requires frequent addition of fluid, the vehicle should be inspected by an authorized HYUNDAI dealer.

⚠ CAUTION

- ***To avoid damage to the power steering pump, do not operate the vehicle for prolonged periods with a low power steering fluid level.***
- ***Never start the engine when the reservoir tank is empty.***
- ***When adding fluid, be careful that dirt does not get into the reservoir.***
- ***Too little fluid can result in increased steering effort and/or noise from the power steering system.***
- ***The use of the non-specified fluid could reduce the effectiveness of the power steering system and cause damage to it.***

Use only the specified power steering fluid. (Refer to "Recommended lubricants or capacities" in section 9.)

G090200AEN

Checking the power steering hose

Check the connections for oil leaks, damage and twists in the power steering hose before driving.

AUTOMATIC TRANSMISSION FLUID (IF EQUIPPED)

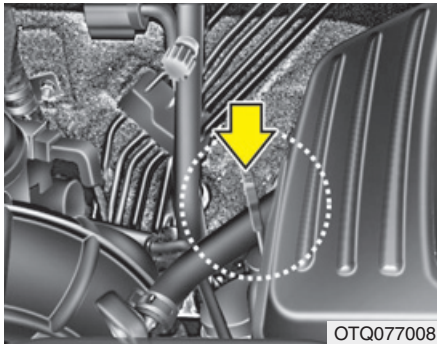

G100100ATQ

Checking the automatic transmission fluid level

✻ NOTICE

If your vehicle is not equipped with the automatic transmission level gauge, have the automatic transmission fluid inspected by an authorized Hyundai dealer according to the maintenance schedule.

If your vehicle is equipped with the automatic transmission level gauge, inspect the fluid level as follows.

The automatic transmission fluid level should be checked regularly.

Keep the vehicle on the level ground with the parking brake applied and check the fluid level according to the following procedure.

1. Place the selector lever in N (Neutral) position and confirm the engine is running at normal idle speed.
2. After the transmission is warmed up sufficiently (fluid temperature 70~80°C (158~176°F), for example by 10 minutes usual driving, move the shift lever through all positions then place the selector lever in “N (Neutral) or P (Park)” position.

OTQ077009

3. Confirm that the fluid level is in “HOT” range on the level gauge. If the fluid level is lower, add the specified fluid from the fill hole. If the fluid level is higher, drain the fluid from the drain hole.
4. If the fluid level is checked in cold condition (fluid temperature 20~30°C (68~86°F) add the fluid to “C” (COLD) line and then recheck the fluid level according to the above step 2.

⚠ WARNING - Transmission fluid

The transmission fluid level should be checked when the engine is at normal operating temperature. This means that the engine, radiator, radiator hose and exhaust system etc., are very hot. Exercise great care not to burn yourself during this procedure.

⚠ CAUTION

- ***Low fluid level causes transmission slippage. Overfilling can cause foaming, loss of fluid and transmission malfunction.***
- ***The use of a non-specified fluid could result in transmission malfunction and failure.***

⚠ WARNING - Parking brake

To avoid sudden movement of the vehicle, apply parking brake and depress the brake pedal before moving the shift lever.

✻ NOTICE

“C” (COLD) range is for reference only and should NOT be used to determine transmission fluid level.

✻ NOTICE

New automatic transmission fluid should be red. The red dye is added so the assembly plant can identify it as automatic transmission fluid and distinguish it from engine oil or antifreeze. The red dye, which is not an indicator of fluid quality, is not permanent. As the vehicle is driven, the automatic transmission fluid will begin to look darker. The color may eventually appear light brown. Therefore, have an authorized HYUNDAI dealer change the automatic transmission fluid according to the Scheduled Maintenance at the beginning of this section.

Use only the specified automatic transmission fluid. (Refer to “Recommended lubricants and capacities” in section 9.)

G100200AFD

Changing the automatic transmission fluid

Have automatic transmission fluid changed by an authorized HYUNDAI dealer according to the Maintenance Schedule at the beginning of this section.

WASHER FLUID

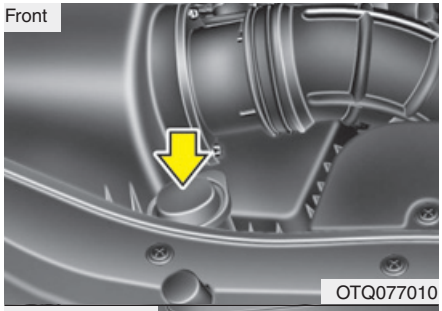

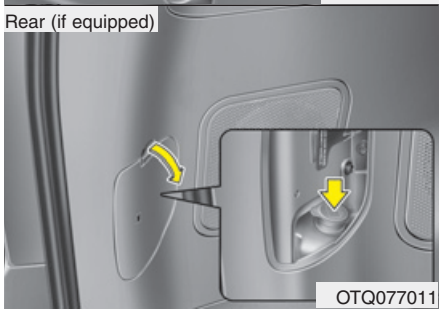

G120100AUN

Checking the washer fluid level

The reservoir is translucent so that you can check the level with a quick visual inspection.

Check the fluid level in the washer fluid reservoir and add fluid if necessary. Plain water may be used if washer fluid is not available.

However, use washer solvent with antifreeze characteristics in cold climates to prevent freezing.

⚠ WARNING - Coolant

- **Do not use radiator coolant or antifreeze in the washer fluid reservoir.**
- **Radiator coolant can severely obscure visibility when sprayed on the windshield and may cause loss of vehicle control or damage to paint and body trim.**
- **Windshield Washer fluid agents contain some amounts of alcohol and can be flammable under certain circumstances. Do not allow sparks or flame to contact the washer fluid or the washer fluid reservoir. Damage to the vehicle or occupants could occur.**
- **Windshield washer fluid is poisonous to humans and animals. Do not drink and avoid contacting windshield washer fluid. Serious injury or death could occur.**

PARKING BRAKE

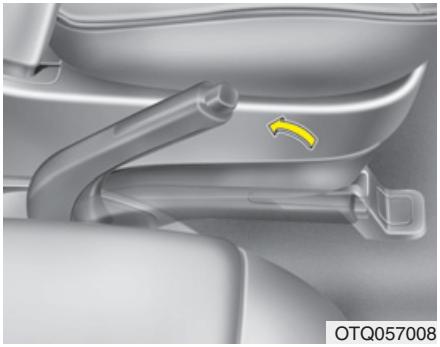
OTQ057008

G140100AFD

Checking the parking brake

Check the stroke of the parking brake by counting the number of “clicks” heard while fully applying it from the released position. Also, the parking brake alone should securely hold the vehicle on a fairly steep grade. If the stroke is more or less than specified, have the parking brake adjusted by an authorized HYUNDAI dealer.

Stroke : 7 “clicks” at a force of 20 kg (44 lbs, 196 N).

FUEL FILTER (FOR DIESEL)

G150100AFD

Draining water from fuel filter

The fuel filter for diesel engine plays an important role of separating water from fuel and accumulating the water in its bottom.

If water accumulates in the fuel filter, the warning light comes on when the ignition switch is in the ON position.

If the light is turned on, take your car to the authorised HYUNDAI dealer and have drain the water and checked the system.

⚠ CAUTION

If the water accumulated in the fuel filter is not drained at proper times, damages to the major parts such as the fuel system can be caused by water permeation in the fuel filter.

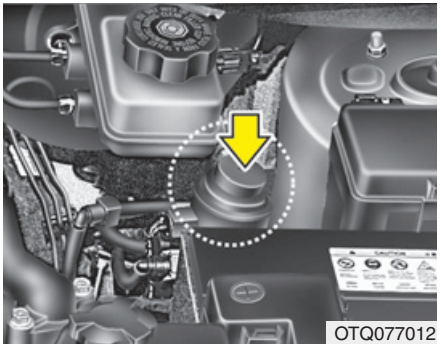
OTQ077012

G150200AEN

Fuel filter cartridge replacement

✻ NOTICE

When replacing the fuel filter cartridge, use HYUNDAI genuine parts.

AIR CLEANER

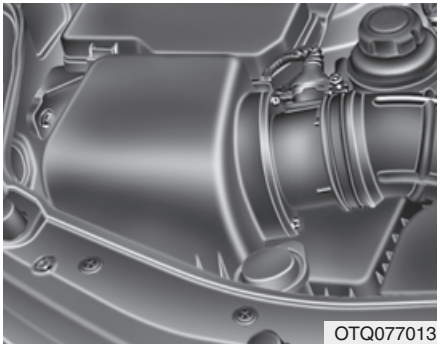

G160100AEN

Filter replacement

It must be replaced when necessary, and should not be cleaned and reused.

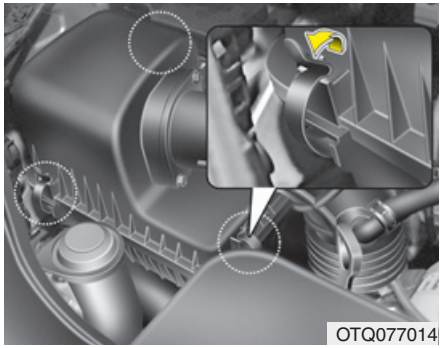

1. Loosen the air cleaner cover attaching clips and open the cover.

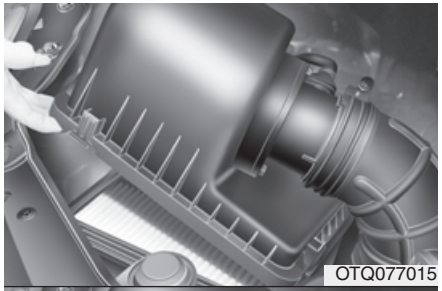

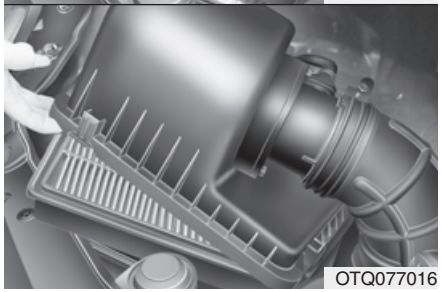

2. Replace the air cleaner filter.
3. Lock the cover with the cover attaching clips.

Replace the filter according to the Maintenance Schedule.

If the vehicle is operated in extremely dusty or sandy areas, replace the element more often than the usual recommended intervals. (Refer to "Maintenance under severe usage conditions" in this section.)

⚠ CAUTION

- ***Do not drive with the air cleaner removed; this will result in excessive engine wear.***
- ***When removing the air cleaner filter, be careful that dust or dirt does not enter the air intake, or damage may result.***
- ***Use a HYUNDAI genuine part. Use of non-genuine parts could damage the air flow sensor or turbocharger.***

CLIMATE CONTROL AIR FILTER (IF EQUIPPED)

G170100BEN

Filter inspection

The climate control air filter should be replaced according to the maintenance schedule. If the vehicle is operated in severely air-polluted cities or on dusty rough roads for a long period, it should be inspected more frequently and replaced earlier. When you replace the climate control air filter, replace it performing the following procedure, and be careful to avoid damaging other components.

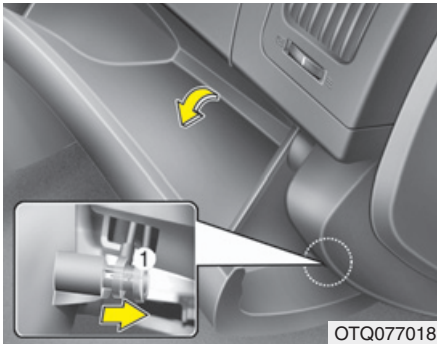

G170200ATQ

Filter replacement

1. Open the glove box and remove the support rod (1).

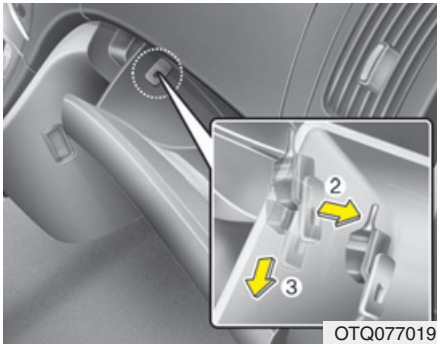

OTQ077019

2. With the glove box open, remove the stoppers on both sides to allow the glove box to hang freely on the hinges.

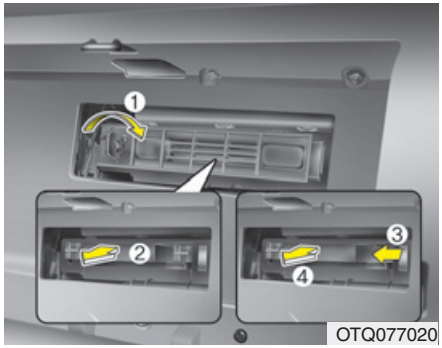

OTQ077020

3. Remove the climate control air filter cover by turning the cover stopper (1) and then remove the air filters.

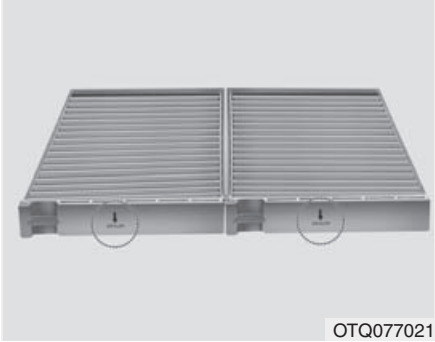
OTQ077021

4. Replace the climate control air filter.
5. Reassemble in the reverse order of disassembly.

✻ NOTICE

When replacing the climate control air filter install it properly. Otherwise, the system may produce noise and the effectiveness of the filter may be reduced.

WIPER BLADES

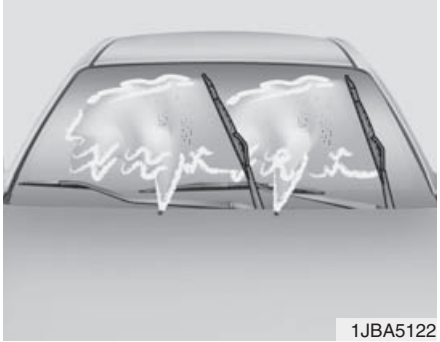
1JBA5122

G180100AUN

Blade inspection

✻ NOTICE

Commercial hot waxes applied by automatic car washes have been known to make the windshield difficult to clean.

Contamination of either the windshield or the wiper blades with foreign matter can reduce the effectiveness of the windshield wipers. Common sources of contamination are insects, tree sap, and hot wax treatments used by some commercial car washes. If the blades are not wiping properly, clean both the window and the blades with a good cleaner or mild detergent, and rinse thoroughly with clean water.

⚠ CAUTION

To prevent damage to the wiper blades, do not use gasoline, kerosene, paint thinner, or other solvents on or near them.

G180200AUN

Blade replacement

When the wipers no longer clean adequately, the blades may be worn or cracked, and require replacement.

⚠ CAUTION

To prevent damage to the wiper arms or other components, do not attempt to move the wipers manually.

⚠ CAUTION

The use of a non-specified wiper blade could result in wiper malfunction and failure.

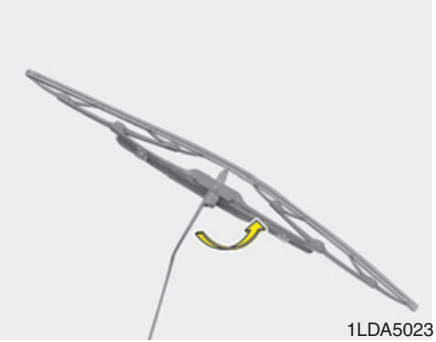

G180201ATQ

Front windshield wiper blade

1. Raise the wiper arm.

⚠ CAUTION

Do not allow the wiper arm to fall against the windshield, since it may chip or crack the windshield.

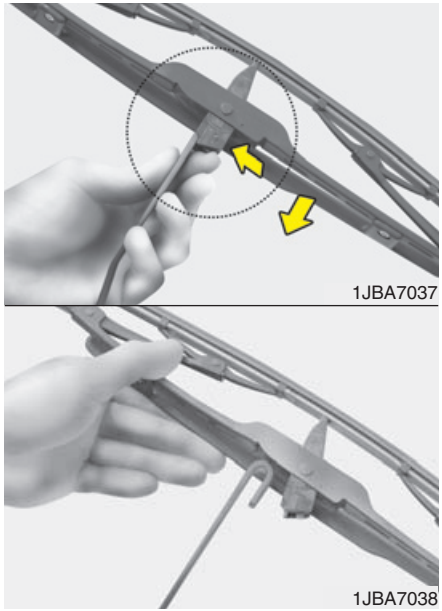

2. Compress the clip and slide the blade assembly downward.
3. Lift it off the arm.
4. Install the blade assembly in the reverse order of removal.

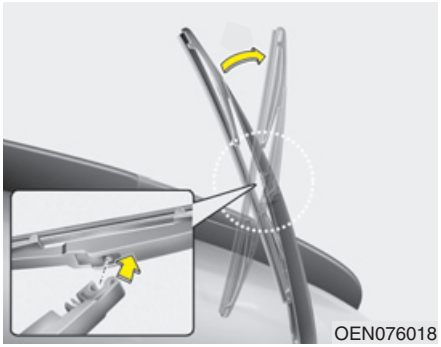

G180202AFD

Rear window wiper blade (if equipped)

1. Raise the wiper arm and pull out the wiper blade assembly.

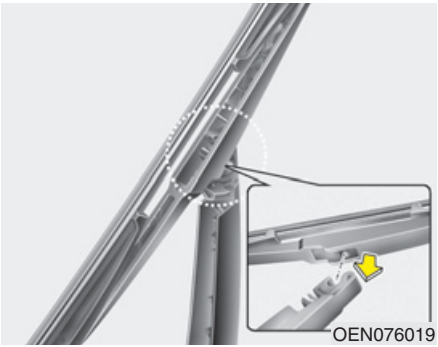

2. Install the new blade assembly by inserting the center part into the slot in the wiper arm until it clicks into place.
3. Make sure the blade assembly is installed firmly by trying to pull it slightly.

To prevent damage to the wiper arms or other components, have an authorized HYUNDAI dealer replace the wiper blade.

BATTERY

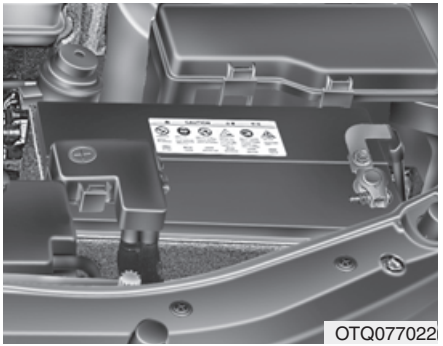

G190100CUN

For best battery service

- Keep the battery securely mounted.
- Keep the battery top clean and dry.
- Keep the terminals and connections clean, tight, and coated with petroleum jelly or terminal grease.
- Rinse any spilled electrolyte from the battery immediately with a solution of water and baking soda.
- If the vehicle is not going to be used for an extended time, disconnect the battery cables.

⚠ WARNING - Battery dangers

Always read the following instructions carefully when handling a battery.

Keep lighted cigarettes and all other flames or sparks away from the battery.

Hydrogen, a highly combustible gas, is always present in battery cells and may explode if ignited.

Keep batteries out of the reach of children because batteries contain highly corrosive SULFURIC ACID. Do not allow battery acid to contact your skin, eyes, clothing or paint finish.

(Continued)

(Continued)

If any electrolyte gets into your eyes, flush your eyes with clean water for at least 15 minutes and get immediate medical attention.

If electrolyte gets on your skin, thoroughly wash the contacted area. If you feel a pain or a burning sensation, get medical attention immediately.

Wear eye protection when charging or working near a battery. Always provide ventilation when working in an enclosed space.

An inappropriately disposed battery can be harmful to the environment and human health. Dispose the battery according to your local law(s) or regulation.

(Continued)

(Continued)

- **When lifting a plastic-cased battery, excessive pressure on the case may cause battery acid to leak, resulting in personal injury. Lift with a battery carrier or with your hands on opposite corners.**
- **Never attempt to recharge the battery when the battery cables are connected.**
- **The electrical ignition system works with high voltage. Never touch these components with the engine running or the ignition switched on.**

Failure to follow the above warnings can result in serious bodily injury or death.

⚠ CAUTION

If you connect unauthorized electronic devices to the battery, the battery may be discharged. Never use unauthorized devices.

■ Example

OJD072039

❊ The actual battery label in the vehicle may differ from the illustration.

Battery capacity label

1. CMF65L-BCI : The HYUNDAI model name of battery
2. 12V : The nominal voltage
3. 60Ah(20HR) : The nominal capacity (in Ampere hours)
4. 92RC : The nominal reserve capacity (in min.)
5. 550CCA : The cold-test current in amperes by SAE
6. 440A : The cold-test current in amperes by EN

G190200AUN

Battery recharging

Your vehicle has a maintenance-free, calcium-based battery.

- If the battery becomes discharged in a short time (because, for example, the headlights or interior lights were left on while the vehicle was not in use), recharge it by slow charging (trickle) for 10 hours.
- If the battery gradually discharges because of high electric load while the vehicle is being used, recharge it at 20-30A for two hours.

⚠ WARNING - Recharging battery

When recharging the battery, observe the following precautions:

- **The battery must be removed from the vehicle and placed in an area with good ventilation.**
- **Do not allow cigarettes, sparks, or flame near the battery.**
- **Watch the battery during charging, and stop or reduce the charging rate if the battery cells begin gassing (boiling) violently or if the temperature of the electrolyte of any cell exceeds 49°C (120°F).**
- **Wear eye protection when checking the battery during charging.**
- **Disconnect the battery charger in the following order.**

1. **Turn off the battery charger main switch.**
2. **Unhook the negative clamp from the negative battery terminal.**
3. **Unhook the positive clamp from the positive battery terminal.**

⚠ WARNING

- **Before performing maintenance or recharging the battery, turn off all accessories and stop the engine.**
- **The negative battery cable must be removed first and installed last when the battery is disconnected.**

G190300ATQ

Reset items

Items should be reset after the battery has been discharged or the battery has been disconnected.

- Climate control system (See section 4)
- Clock (See section 4)
- Audio (See section 4)

TIRES AND WHEELS

G200100AUN

Tire care

For proper maintenance, safety, and maximum fuel economy, you must always maintain recommended tire inflation pressures and stay within the load limits and weight distribution recommended for your vehicle.

G200200AEN

Recommended cold tire inflation pressures

All tire pressures (including the spare) should be checked when the tires are cold. “Cold Tires” means the vehicle has not been driven for at least three hours or driven less than 1.6 km (one mile).

Recommended pressures must be maintained for the best ride, top vehicle handling, and minimum tire wear.

For recommended inflation pressure, refer to “Tire and wheels” in section 9.

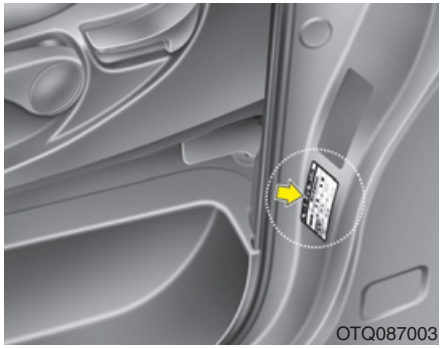

All specifications (sizes and pressures) can be found on a label attached to the vehicle.

⚠ WARNING - Tire underinflation

Severe underinflation can lead to severe heat build-up, causing blowouts, tread separation and other tire failures that can result in the loss of vehicle control leading to severe injury or death. This risk is much higher on hot days and when driving for long periods at high speeds.

⚠ CAUTION

- ***Underinflation also results in excessive wear, poor handling and reduced fuel economy. Wheel deformation also is possible. Keep your tire pressures at the proper levels. If a tire frequently needs refilling, have it checked by an authorized HYUNDAI dealer.***
- ***Overinflation produces a harsh ride, excessive wear at the center of the tire tread, and a greater possibility of damage from road hazards.***

⚠ CAUTION

- *Warm tires normally exceed recommended cold tire pressures by 28 to 41 kPa (4 to 6 psi). Do not release air from warm tires to adjust the pressure or the tires will be underinflated.*
- *Be sure to reinstall the tire inflation valve caps. Without the valve cap, dirt or moisture could get into the valve core and cause air leakage. If a valve cap is missing, install a new one as soon as possible.*

⚠ WARNING - Tire Inflation

Overinflation or underinflation can reduce tire life, adversely affect vehicle handling, and lead to sudden tire failure. This could result in loss of vehicle control and potential injury.

⚠ CAUTION - Tire pressure

Always observe the following:

- *Check tire pressure when the tires are cold. (After vehicle has been parked for at least three hours or hasn't been driven more than 1.6 km (one mile) since startup.)*
- *Check the pressure of your spare tire each time you check the pressure of other tires.*
- *Never overload your vehicle. Be careful not to overload a vehicle luggage rack if your vehicle is equipped with one.*
- *Worn, old tires can cause accidents. If your tread is badly worn, or if your tires have been damaged, replace them.*

G200300AUN

Checking tire inflation pressure

Check your tires once a month or more.

Also, check the tire pressure of the spare tire.

G200301AEN

How to check

Use a good quality gage to check tire pressure. You can not tell if your tires are properly inflated simply by looking at them. Radial tires may look properly inflated even when they're underinflated.

Check the tire's inflation pressure when the tires are cold. - "Cold" means your vehicle has been sitting for at least three hours or driven no more than 1.6 km (1 mile).

Remove the valve cap from the tire valve stem. Press the tire gage firmly onto the valve to get a pressure measurement. If the cold tire inflation pressure matches the recommended pressure on the tire and loading information label, no further adjustment is necessary. If the pressure is low, add air until you reach the recommended amount.

If you overfill the tire, release air by pushing on the metal stem in the center of the tire valve. Recheck the tire pressure with the tire gage. Be sure to put the valve caps back on the valve stems. They help prevent leaks by keeping out dirt and moisture.

⚠ WARNING

- **Inspect your tires frequently for proper inflation as well as wear and damage. Always use a tire pressure gauge.**
- **Tires with too much or too little pressure wear unevenly causing poor handling, loss of vehicle control, and sudden tire failure leading to accidents, injuries, and even death. The recommended cold tire pressure for your vehicle can be found in this manual and on the tire label located on the driver's side center pillar.**
- **Worn tires can cause accidents. Replace tires that are worn, show uneven wear, or are damaged.**
- **Remember to check the pressure of your spare tire. HYUNDAI recommends that you check the spare every time you check the pressure of the other tires on your vehicle.**

G200400AUN

Tire rotation

To equalize tread wear, it is recommended that the tires be rotated every 12,000 km (7,500 miles) or sooner if irregular wear develops.

During rotation, check the tires for correct balance.

When rotating tires, check for uneven wear and damage. Abnormal wear is usually caused by incorrect tire pressure, improper wheel alignment, out-of-balance wheels, severe braking or severe cornering. Look for bumps or bulges in the tread or side of tire. Replace the tire if you find either of these conditions. Replace the tire if fabric or cord is visible. After rotation, be sure to bring the front and rear tire pressures to specification and check lug nut tightness.

Refer to “Tire and wheels” in section 9.

With a full-size spare tire

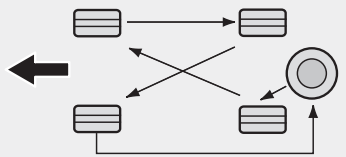

S2BLA790

Without a spare tire

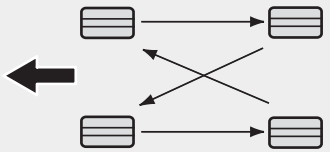

S2BLA790A

Directional tires (if equipped)

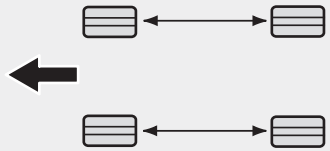

CBGQ0707A

Disc brake pads should be inspected for wear whenever tires are rotated.

✻ NOTICE

Rotate radial tires that have an asymmetric tread pattern only from front to rear and not from right to left.

⚠ WARNING

- **Do not use the compact spare tire for tire rotation.**
- **Do not mix bias ply and radial ply tires under any circumstances. This may cause unusual handling characteristics that could result in death, severe injury, or property damage.**

G200500AUN

Wheel alignment and tire balance

The wheels on your vehicle were aligned and balanced carefully at the factory to give you the longest tire life and best overall performance.

In most cases, you will not need to have your wheels aligned again. However, if you notice unusual tire wear or your vehicle pulling one way or the other, the alignment may need to be reset.

If you notice your vehicle vibrating when driving on a smooth road, your wheels may need to be rebalanced.

⚠ CAUTION

Improper wheel weights can damage your vehicle's aluminum wheels. Use only approved wheel weights.

G200600BEN

Tire replacement

If the tire is worn evenly, a tread wear indicator will appear as a solid band across the tread. This shows there is less than 1.6 mm (1/16 inch) of tread left on the tire. Replace the tire when this happens.

Do not wait for the band to appear across the entire tread before replacing the tire.

⚠ WARNING - Replacing tires

To reduce the chance or serious or fatal injuries from an accident caused by tire failure or loss of vehicle control:

- **Replace tires that are worn, show uneven wear, or are damaged. Worn tires can cause loss of braking effectiveness, steering control, and traction.**
- **Do not drive your vehicle with too little or too much pressure in your tires. This can lead to uneven wear and tire failure.**
- **When replacing tires, never mix radial and bias-ply tires on the same car. You must replace all tires (including the spare) if moving from radial to bias-ply tires.**

(Continued)

(Continued)

- **Using tires and wheel other than the recommended sizes could cause unusual handling characteristics and poor vehicle control, resulting in a serious accident.**
- **Wheels that do not meet HYUNDAI's specifications may fit poorly and result in damage to the vehicle or unusual handling and poor vehicle control.**
- **The ABS works by comparing the speed of the wheels. Tire size can affect wheel speed. When replacing tires, all 4 tires must use the same size originally supplied with the vehicle. Using tires of a different size can cause the ABS (Anti-lock Brake System) and ESP (Electronic Stability Program) (if equipped) to work irregularly.**

G200700BUN

Wheel replacement

When replacing the metal wheels for any reason, make sure the new wheels are equivalent to the original factory units in diameter, rim width and offset.

⚠ WARNING

A wheel that is not the correct size may adversely affect wheel and bearing life, braking and stopping abilities, handling characteristics, ground clearance, body-to-tire clearance, snow chain clearance, speedometer and odometer calibration, headlight aim and bumper height.

G200800AUN

Tire traction

Tire traction can be reduced if you drive on worn tires, tires that are improperly inflated or on slippery road surfaces. Tires should be replaced when tread wear indicators appear. To reduce the possibility of losing control, slow down whenever there is rain, snow or ice on the road.

G200900AUN

Tire maintenance

In addition to proper inflation, correct wheel alignment helps to decrease tire wear. If you find a tire is worn unevenly, have your dealer check the wheel alignment.

When you have new tires installed, make sure they are balanced. This will increase vehicle ride comfort and tire life. Additionally, a tire should always be rebalanced if it is removed from the wheel.

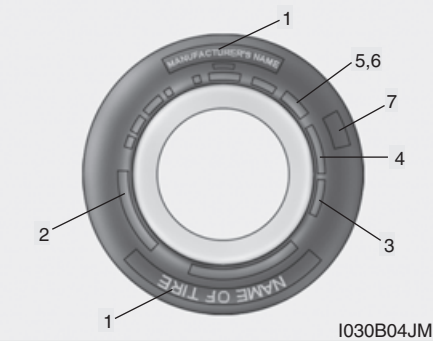

G201000AUN

Tire sidewall labeling

This information identifies and describes the fundamental characteristics of the tire and also provides the tire identification number (TIN) for safety standard certification. The TIN can be used to identify the tire in case of a recall.

G201001AUN

1. Manufacturer or brand name

Manufacturer or Brand name is shown.

G201002AEN

2. Tire size designation

A tire's sidewall is marked with a tire size designation. You will need this information when selecting replacement tires for your car. The following explains what the letters and numbers in the tire size designation mean.

Example tire size designation:

(These numbers are provided as an example only; your tire size designator could vary depending on your vehicle.)

P245/65R17 105T

P - Applicable vehicle type (tires marked with the prefix "P" are intended for use on passenger cars or light trucks; however, not all tires have this marking).

245 - Tire width in millimeters.

65 - Aspect ratio. The tire's section height as a percentage of its width.

R - Tire construction code (Radial).

17 - Rim diameter in inches.

105 - Load Index, a numerical code associated with the maximum load the tire can carry.

T - Speed Rating Symbol. See the speed rating chart in this section for additional information.

Wheel size designation

Wheels are also marked with important information that you need if you ever have to replace one. The following explains what the letters and numbers in the wheel size designation mean.

Example wheel size designation:

7.0JX17

7.0 - Rim width in inches.

J - Rim contour designation.

17 - Rim diameter in inches.

Tire speed ratings

The chart below lists many of the different speed ratings currently being used for passenger car tires. The speed rating is part of the tire size designation on the sidewall of the tire. This symbol corresponds to that tire's designed maximum safe operating speed.

Speed Rating Symbol	Maximum Speed
S	180 km/h (112 mph)
T	190 km/h (118 mph)
H	210 km/h (130 mph)
V	240 km/h (149 mph)
Z	Above 240 km/h (149 mph)

G201003AEN

3. Checking tire life (TIN : Tire Identification Number)

Any tires that are over 6 years old, based on the manufacturing date, (including the spare tire) should be replaced by new ones. You can find the manufacturing date on the tire sidewall (possibly on the inside of the wheel), displaying the DOT Code. The DOT Code is a series of numbers on a tire consisting of numbers and English letters. The manufacturing date is designated by the last four digits (characters) of the DOT code.

DOT : XXXX XXXX OOOO

The front part of the DOT means a plant code number, tire size and tread pattern and the last four numbers indicate week and year manufactured.

For example:

DOT XXXX XXXX 1612 represents that the tire was produced in the 16th week of 2012.

⚠ WARNING - Tire age

Tires degrade over time, even when they are not being used.

Regardless of the remaining tread, it is recommended that tires generally be replaced after six (6) years of normal service. Heat caused by hot climates or frequent high loading conditions can accelerate the aging process. Failure to follow this warning can result in sudden tire failure, which could lead to a loss of control and an accident involving serious injury or death.

G201004AEN

4. Tire ply composition and material

The number of layers or plies of rubber-coated fabric in the tire. Tire manufacturers also must indicate the materials in the tire, which include steel, nylon, polyester, and others. The letter "R" means radial ply construction; the letter "D" means diagonal or bias ply construction; and the letter "B" means belted-bias ply construction.

G201005AUN

5. Maximum permissible inflation pressure

This number is the greatest amount of air pressure that should be put in the tire. Do not exceed the maximum permissible inflation pressure. Refer to the Tire and Loading Information label for recommended inflation pressure.

G201006AUN

6. Maximum load rating

This number indicates the maximum load in kilograms and pounds that can be carried by the tire. When replacing the tires on the vehicle, always use a tire that has the same load rating as the factory installed tire.

G2010007BEN

7. Uniform tire quality grading

Quality grades can be found where applicable on the tire sidewall between tread shoulder and maximum section width.

For example:

TREAD wear 200

TRACTION AA

TEMPERATUE A

Tread wear

The tread wear grade is a comparative rating based on the wear rate of the tire when tested under controlled conditions on a specified government test course. For example, a tire graded 150 would wear one-and-a-half times (1½) as well on the government course as a tire graded 100.

The relative performance of tires depends upon the actual conditions of their use, however, and may depart significantly from the norm due to variations in driving habits, service practices and differences in road characteristics and climate.

These grades are molded on the side-walls of passenger vehicle tires. The tires available as standard or optional equipment on your vehicle may vary with respect to grade.

Traction - AA, A, B & C

The traction grades, from highest to lowest, are AA, A, B and C. Those grades represent the tire's ability to stop on wet pavement as measured under controlled conditions on specified government test surfaces of asphalt and concrete. A tire marked C may have poor traction performance.

⚠ WARNING

The traction grade assigned to this tire is based on straight-ahead braking traction tests, and does not include acceleration, cornering, hydroplaning, or peak traction characteristics.

Temperature -A, B & C

The temperature grades are A (the highest), B, and C, representing the tire's resistance to the generation of heat and its ability to dissipate heat when tested under controlled conditions on a specified indoor laboratory test wheel.

Sustained high temperature can cause the material of the tire to degenerate and reduce tire life, and excessive temperature can lead to sudden tire failure. Grades B and A represent higher levels of performance on the laboratory test wheel than the minimum required by law.

⚠ WARNING - Tire temperature

The temperature grade for this tire is established for a tire that is properly inflated and not overloaded. Excessive speed, underinflation, or excessive loading, either separately or in combination, can cause heat build-up and possible sudden tire failure. This can cause loss of vehicle control and serious injury or death.

FUSES

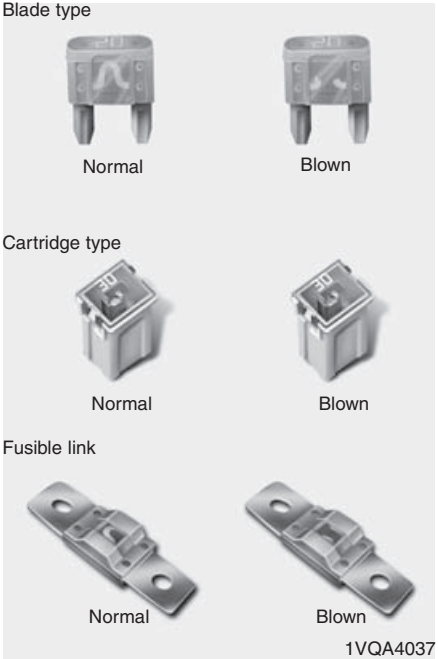

G210000CEN

A vehicle's electrical system is protected from electrical overload damage by fuses.

This vehicle has 3 fuse panels, one located in the driver's side panel bolster, the other in the engine compartment.

If any of your vehicle's lights, accessories, or controls do not work, check the appropriate circuit fuse. If a fuse has blown, the element inside the fuse will be melted.

If the electrical system does not work, first check the driver's side fuse panel.

Before replacing a blown fuse, disconnect the negative battery cable.

Always replace a blown fuse with one of the same rating.

If the replacement fuse blows, this indicates an electrical problem. Avoid using the system involved and immediately consult an authorized HYUNDAI dealer.

Three kinds of fuses are used: blade type for lower amperage rating, cartridge type, and fusible link for higher amperage ratings.

⚠ WARNING - Fuse replacement

- **Never replace a fuse with anything but another fuse of the same rating.**
- **A higher capacity fuse could cause damage and possibly a fire.**
- **Never install a wire or aluminum foil instead of the proper fuse - even as a temporary repair. It may cause extensive wiring damage and a possible fire.**

⚠ CAUTION

Do not use a screwdriver or any other metal object to remove fuses because it may cause a short circuit and damage the system.

✻ NOTICE

The actual fuse/relay panel label may differ from equipped items.

⚠ **CAUTION**

- ***When replacing a blown fuse or relay with a new one, make sure the new fuse or relay fits tightly into the clips. The incomplete fastening fuse or relay may cause the vehicle wiring and electric systems damage and a possible fire.***
- ***Do not remove fuses, relays and terminals fastened with bolts or nuts. The fuses, relays and terminals may be fastened incompletely, and it may cause a possible fire. If fuses, relays and terminals fastened with bolts or nuts are blown, consult with an authorized HYUNDAI dealer.***
- ***Do not input any other objects except fuses or relays into fuse/relay terminals such as a driver or wiring. It may cause contact failure and system malfunction.***

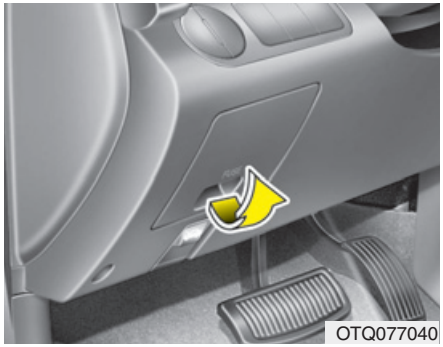

G210100AFD

Instrument panel fuse replacement

1. Turn the ignition switch and all other switches off.
2. Open the fuse panel cover.

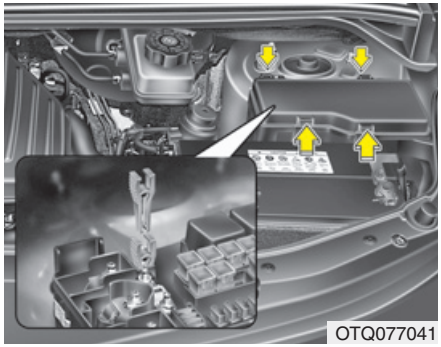

3. Pull the suspected fuse straight out. Use the removal tool provided in the engine compartment fuse panel.
4. Check the removed fuse; replace it if it is blown.

   Spare fuses are provided in the inner fuse panel (or in the engine compartment fuse panel).
5. Push in a new fuse of the same rating, and make sure it fits tightly in the clips.

If it fits loosely, consult an authorized HYUNDAI dealer.

If you do not have a spare, use a fuse of the same rating from a circuit you may not need for operating the vehicle, such as the cigarette lighter fuse.

If the headlights or other electrical components do not work and the fuses are OK, check the fuse panel in the engine compartment. If a fuse is blown, it must be replaced.

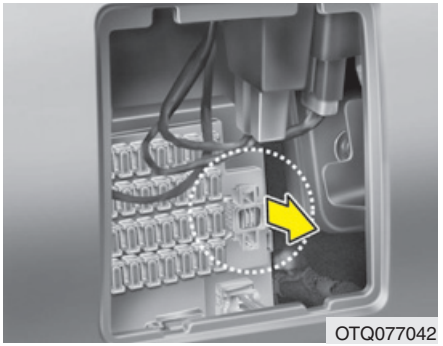

G210101AUN

Memory fuse

Your vehicle is equipped with a memory fuse to prevent battery discharge if your vehicle is parked without being operated for prolonged periods. Use the following procedures before parking the vehicle for prolonged periods.

1. Turn off the engine.
2. Turn off the headlights and tail lights.
3. Open the driver's side panel cover and pull up the memory fuse.

✻ NOTICE

- **If the memory fuse is pulled up from the fuse panel, the warning chime, audio, clock and interior lamps, etc., will not operate. Some items must be reset after replacement. Refer to "Battery" in this section.**
- **Even though the memory fuse is pulled up, the battery can still be discharged by operation of the headlights or other electrical devices.**

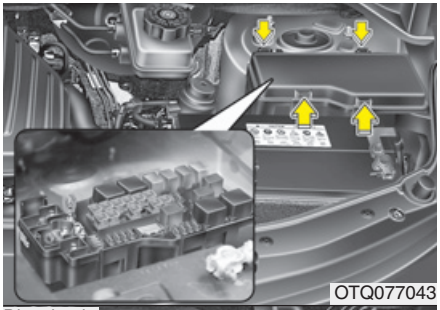

Diesel only

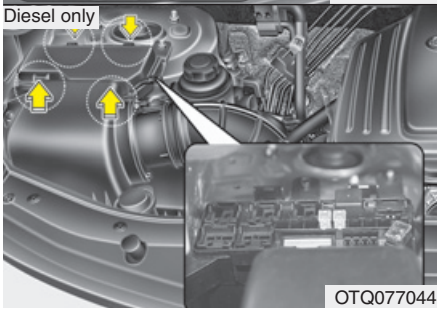

G210200AEN

Engine compartment fuse replacement

1. Turn the ignition switch and all other switches off.
2. Remove the fuse panel cover by pressing the tab and pulling up.
3. Check the removed fuse; replace it if it is blown. To remove or insert the fuse, use the fuse puller in the engine compartment fuse panel.
4. Push in a new fuse of the same rating, and make sure it fits tightly in the clips. If it fits loosely, consult an authorized HYUNDAI dealer.

⚠ CAUTION

After checking the fuse panel in the engine compartment, securely install the fuse panel cover. If not, electrical failures may occur from water contact.

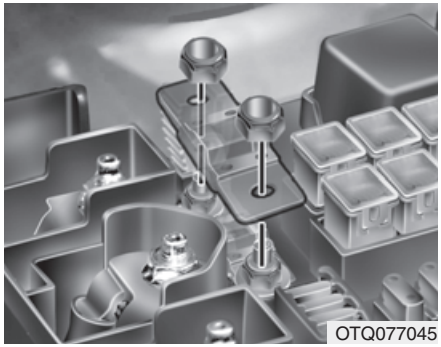

G210201AEN

Main fuse

If the main fuse is blown, it must be removed as follows:

1. Disconnect the negative battery cable.
2. Remove the nuts shown in the picture above.
3. Replace the fuse with a new one of the same rating.
4. Reinstall in the reverse order of removal.

✻ NOTICE

If the main fuse is blown, consult an authorized HYUNDAI dealer.

G210300ATQ

Fuse/relay panel description

Inside the fuse/relay panel covers, you can find the fuse/relay label describing fuse/relay name and capacity.

Instrument panel fuse panel

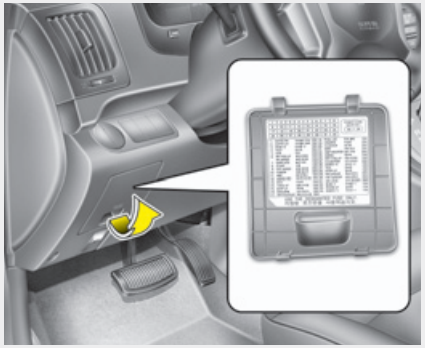

Engine compartment fuse panel

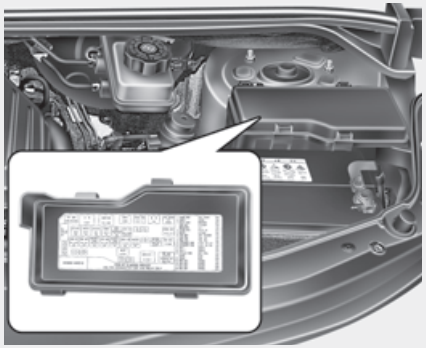

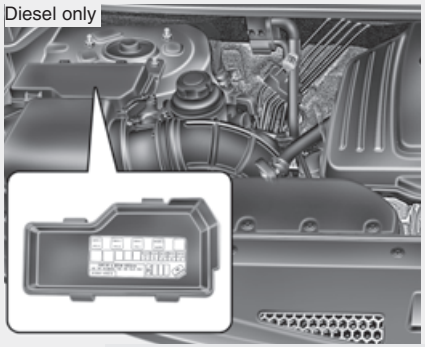

OTQ077046/OTQ077047/OTQ077048

✻ NOTICE

Not all fuse panel descriptions in this manual may be applicable to your vehicle. It is accurate at the time of printing. When you inspect the fuse panel in your vehicle, refer to the fuse panel label.

Instrument panel fuse panel

Description	Fuse rating	Protected component
AUDIO-2	10A	Audio, Digital clock, BCM, Power outside mirror switch
C/LIGHTER	20A	Cigarette lighter, Front power outlet
S/HTD DRI	10A	Driver seat warmer switch (if equipped)
DRL	10A	BCM (if equipped)
RR FOG LP	15A	Rear fog lamp relay
H/LP	10A	Head lamp High/Low relay
FRT WIPER	25A	Front wiper relay, Front wiper motor
BCM	10A	BCM
HTR	10A	Front/Rear blower relay, Front/Rear A/C control module, Condenser fan relay, Electro chromic mirror, Thermo switch, PTC heater relay(D4CB), EGR solenoid valve(D4BH)
B/UP LP	10A	Back-up lamp relay, Back-up lamp switch, Transmission range switch
ABS	10A	ABS/ESP control module, ESP switch(D4CB)
T/SIG LP	10A	Hazard switch
A/BAG	10A	SRS control module
A/BAG IND	10A	Instrument cluster
CLUSTER	10A	Instrument cluster, BCM, Immobilizer control module(D4BH), A/C relay(D4BH), Generator resister
ECU	10A	Vehicle speed sensor, ECM, Air flow sensor(D4CB), Injection pump(D4BH), TCM, Fuel filter warning sensor
START	10A	Start relay, Burglar alarm relay
MIRR HTD	10A	Front A/C control module, Power outside mirror & defogger LH/RH
STOP LP	15A	Stop lamp switch
BWS	10A	Buzzer

Description	Fuse rating	Protected component
DR LOCK	20A	Door lock/unlock relay
FRT FOG LP	10A	Front fog lamp relay
B/ALARM	10A	Burglar alarm horn relay
AUDIO-1 (POWER CONNECTOR)	15A	Audio
ROOM LP (POWER CONNECTOR)	10A	Digital clock, Instrument cluster, Courtesy lamp LH/RH, Step lamp LH/RH, Cargo lamp, Room lamp switch, Door warning switch, Data link connector, BCM, Vanity lamp switch LH/RH, Overhead console lamp
HAZARD	15A	Hazard relay, Hazard switch
FUEL LID	15A	Fuel filler door relay
P/WDW LH	25A	Power window main switch, Power window switch LH
P/WDW RH	25A	Power window main switch, Power window switch RH

Engine compartment main fuse panel

Description	Fuse rating	Protected component
ALT	150A	Fuse(A/CON, FRT DEICER), Fusible link(FRT HTR, RR HTR, RR HTD, C/FAN, F/FILTER, ABS 1/2), Generator, E/R fuse & relay box RH
BATT 1	50A	Fuse(DR LOCK, FRT FOG LP, B/ALARM, Power connector(AUDIO-1, ROOM LP))
BATT 2	30A	Fuse(FUEL LID, P/WDW LH/RH, HAZARD), Multipurpose check connector
BATT 3/RAD FAN	40A	Fuse(STOP LP, BWS), Radiator fan relay(G4KC)
IGN 1	40A	Ignition switch(ACC, IG1)
IGN 2	40A	Ignition switch(IG2, START), Start relay
ECU MAIN	30A/20A	Engine control relay
FRT HTR	40A	Front blower relay
RR HTD	40A	Rear defogger relay
RR HTR	40A	Rear blower relay
ABS 1	40A	ABS control module(G4KC)
ABS 2	40A	ABS control module(G4KC)
C/FAN	30A	Condenser fan relay 1
F/FILTER	30A	Fuel filter heater relay(DIESEL)
ECU/TCU	10A	TCM, ECM (Gasoline)
HORN	10A	Horn relay
BURNER	20A	Fuel fired heater control module(D4CB)
F/PUMP	15A	Fuel pump relay(G4KC)
ALT	10A	Generator(D4BH)
H/LP HI	15A	Head lamp(HIGH) relay, Head lamp(LOW) relay
A/CON	10A	A/C relay
FRT DEICER	15A	Windshield defogger relay (if equipped)
TAIL LH	10A	Head lamp LH(Position lamp), Rear combi lamp LH, License lamp LH

Description	Fuse rating	Protected component
TAIL RH	10A	Head lamp RH(Position lamp), Rear combi lamp RH, License lamp RH
H/LP LO LH	10A	Head lamp LH
H/LP LO RH	10A	Head lamp RH
SNSR 1	10A	A/C relay, Condenser fan relay(D4CB), Lambda sensor(D4CB), PTC heater relay #1(D4CB), Stop lamp switch(D4CB)
SNSR 2	15A	D4CB:Camshaft position sensor, Glow plug relay, EGR actuator, VGT control valve, Immobilizer control module G4KC:Fuel pump relay, Canister purge solenoid valve, Oil control valve, Crankshaft position sensor, Oxygen sensor, Immobilizer control module, Idle speed control actuator
IGN COIL	15A	Ignition coil #1~#4(G4KC), Condenser(G4KC)
ECU 1	10A	ECM(D4CB)
ECU 2	20A	ECM(D4CB, G4KC), Injector #1~#4(G4KC)
SAFETY P/WDW	20A	Safety power window

Engine compartment sub fuse panel (Diesel engine)

Description	Fuse rating	Protected component
GLOW	80A	Glow plug relay
PTC 1	40A	PTC heater relay #1
PTC 2	40A	PTC heater relay #2
PTC 3	40A	PTC heater relay #3
ABS 1	40A	ABS/ESP control module
ABS 2	40A	ABS/ESP control module
GLOW	10A	ECM (D4BH)

LIGHT BULBS

G220000AEN

⚠ WARNING - Working on the lights

Prior to working on the light, firmly apply the parking brake, ensure that the ignition switch is turned to the LOCK position and turn off the lights to avoid sudden movement of the vehicle and burning your fingers or receiving an electric shock.

Use only the bulbs of the specified wattage.

⚠ CAUTION

Be sure to replace the burned-out bulb with one of the same wattage rating. Otherwise, it may cause damage to the fuse or electric wiring system.

⚠ CAUTION

If you don't have necessary tools, the correct bulbs and the expertise, consult an authorized HYUNDAI dealer. In many cases, it is difficult to replace vehicle light bulbs because other parts of the vehicle must be removed before you can get to the bulb. This is especially true if you have to remove the headlight assembly to get to the bulb(s). Removing/installing the headlight assembly can result in damage to the vehicle.

✻ NOTICE

After heavy, driving rain or washing, headlight and taillight lenses could appear frosty. This condition is caused by the temperature difference between the lamp inside and outside. This is similar to the condensation on your windows inside your vehicle during the rain and doesn't indicate a problem with your vehicle. If the water leaks into the lamp bulb circuitry, have the vehicle checked by an authorized HYUNDAI dealer.

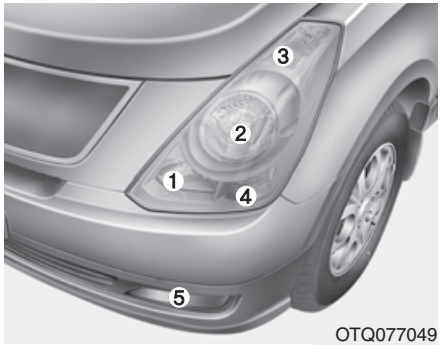

G220100AUN

Headlight, position light, turn signal light, front fog light bulb replacement

(1) Headlight (High)
(2) Headlight (Low)
(3) Position light
(4) Front turn signal light
(5) Front fog light (if equipped)

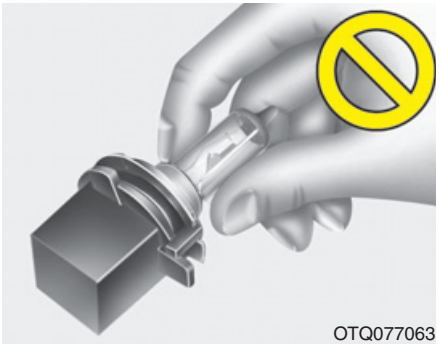

G220101BTQ

Headlight bulb

⚠ WARNING - Halogen bulbs

- **Halogen bulbs contain pressurized gas that will produce flying pieces of glass if broken.**
- **Always handle them carefully, and avoid scratches and abrasions. If the bulbs are lit, avoid contact with liquids. Never touch the glass with bare hands. Residual oil may cause the bulb to overheat and burst when lit. A bulb should be operated only when installed in a headlight.**

(Continued)

(Continued)

- **If a bulb becomes damaged or cracked, replace it immediately and carefully dispose of it.**
- **Wear eye protection when changing a bulb. Allow the bulb to cool down before handling it.**

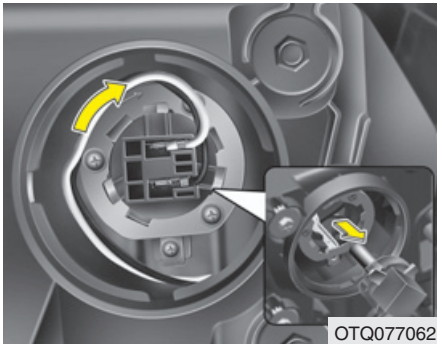

1. Open the hood.
2. Remove the headlight bulb cover by turning it counterclockwise.
3. Remove the bulb from the headlight assembly.
4. Install a new headlight bulb assembly.
5. Install the headlight bulb cover by turning it clockwise.

✻ NOTICE

If the headlight aiming adjustment is necessary after the headlight assembly is reinstalled, consult an authorized HYUNDAI dealer.

G220102ATQ

Turn signal light/position light, fog light bulb (if equipped)

Turn signal light

1. If necessary, remove the headlight assembly by loosening the headlight installation bolts. When you remove the headlight assembly, you may need to remove the bumper according to the vehicle.
2. Replace the malfunctioned light bulb.
3. Install the headlight assembly.

Fog light bulb (if equipped)

1. Remove the fog light under cover by loosening the screw.
2. Replace the malfunctioned light bulb.
3. Install the fog light under cover.

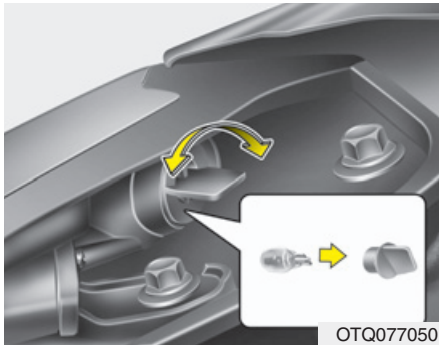
OTQ077050

Position light

1. Open the hood.
2. Remove the socket by turning it counterclockwise.
3. Remove the bulb by pulling it straight out.
4. Insert a new bulb in the socket.
5. Install the position light socket.

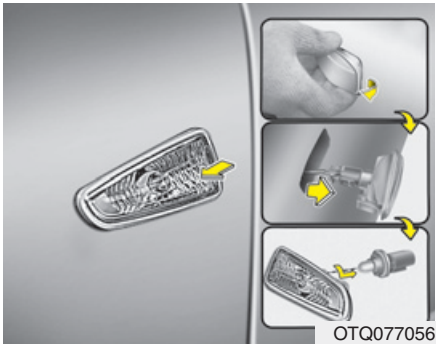
OTQ077056

G220200AUN

Side repeater light bulb replacement (if equipped)

1. Remove the light assembly from the vehicle by prying the lens and pulling the assembly out.
2. Disconnect the bulb electrical connector.
3. Separate the socket and the lens parts by turning the socket counterclockwise until the tabs on the socket align with the slots on the lens part.
4. Remove the bulb by pulling it straight out.
5. Insert a new bulb in the socket.
6. Reassemble the socket and the lens part.
7. Connect the bulb electrical connector.
8. Reinstall the light assembly to the body of the vehicle.

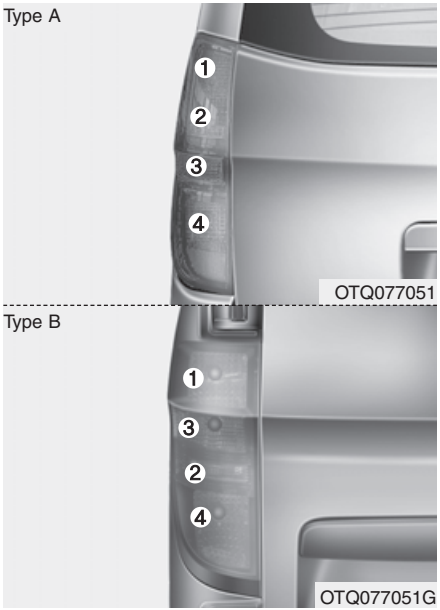

- Without rear fog light
(1) Tail light
(2) Back-up light
(3) Rear turn signal light
(4) Stop light

- With rear fog light
(1) Tail and stop light
(2) Back-up light
(3) Rear turn signal light
(4) Rear fog light

G220300ATQ

Rear combination light bulb replacement

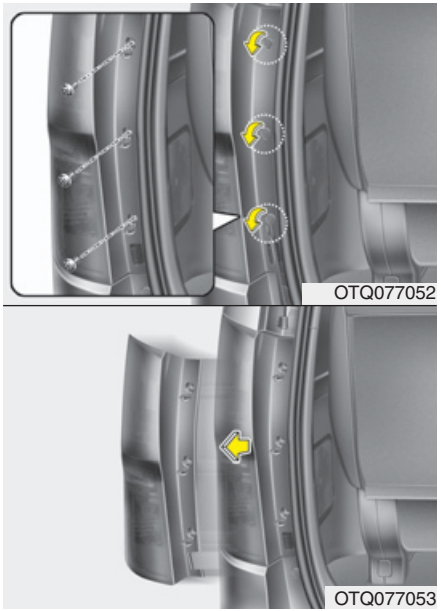

1. Open the tailgate.
2. Loosen the light assembly retaining screws with a philips head screwdriver.
3. Remove the rear combination light assembly from the body of the vehicle.

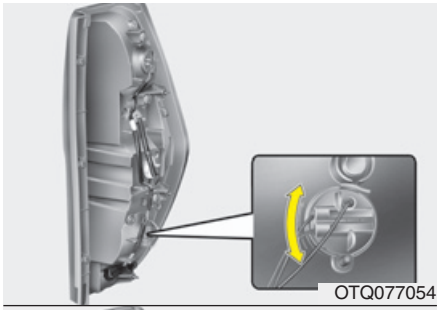

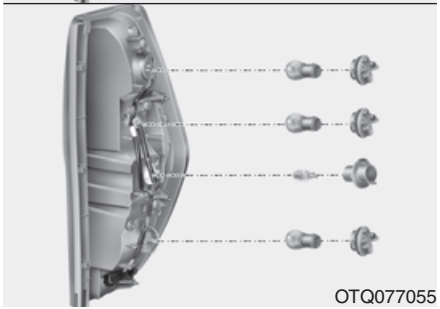

4. Remove the socket from the assembly by turning the socket counterclockwise until the tabs on the socket align with the slots on the assembly.
5. Remove the bulb from the socket by pressing it in and rotating it counter-clockwise until the tabs on the bulb align with the slots in the socket. Pull the bulb out of the socket.
6. Insert a new bulb by inserting it into the socket and rotating it until it locks into place.
7. Install the socket in the assembly by aligning the tabs on the socket with the slots in the assembly. Push the socket into the assembly and turn the socket clockwise.
8. Reinstall the light assembly to the body of the vehicle.

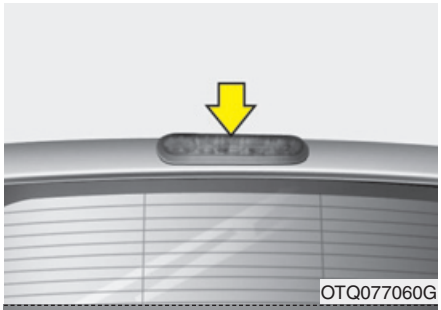

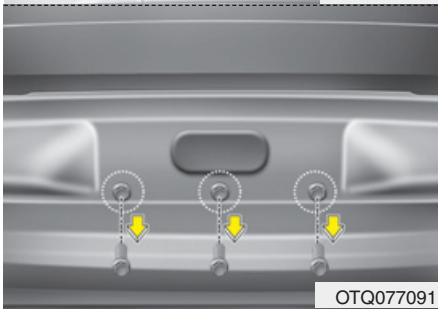

G220400ATQ

High mounted stop light replacement (if equipped)

1. Open the tailgate.
2. Loosen the light assembly retaining bolts with a proper tool.

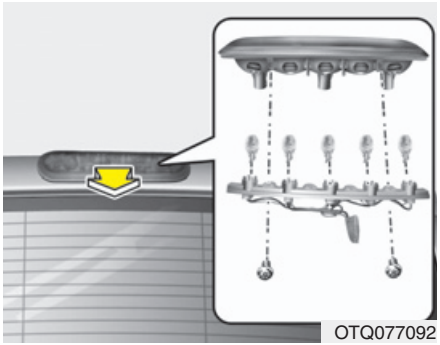

3. Remove the light assembly from the body of the vehicle.
4. Separate the socket and the lens parts by removing the screws with a philips head screwdriver.
5. Remove the bulb by pulling it straight out.
6. Insert a new bulb in the socket.
7. Reassemble the socket and the lens part.
8. Reinstall the light assembly to the body of the vehicle.

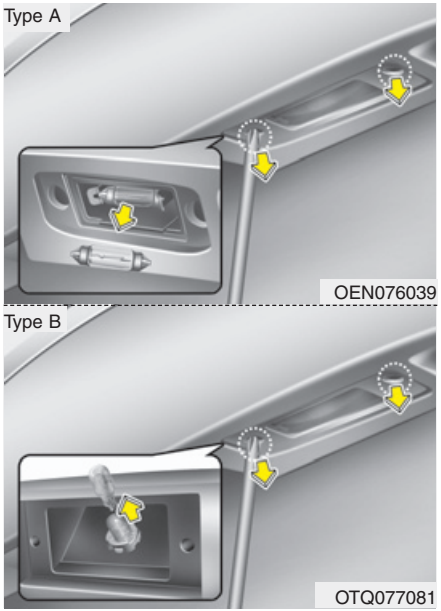

G220500AUN

License plate light bulb replacement

1. Loosen the lens retaining screws with a philips head screwdriver.
2. Remove the lens.
3. Remove the bulb by pulling it straight out.
4. Install a new bulb.
5. Reinstall the lens securely with the lens retaining screws.

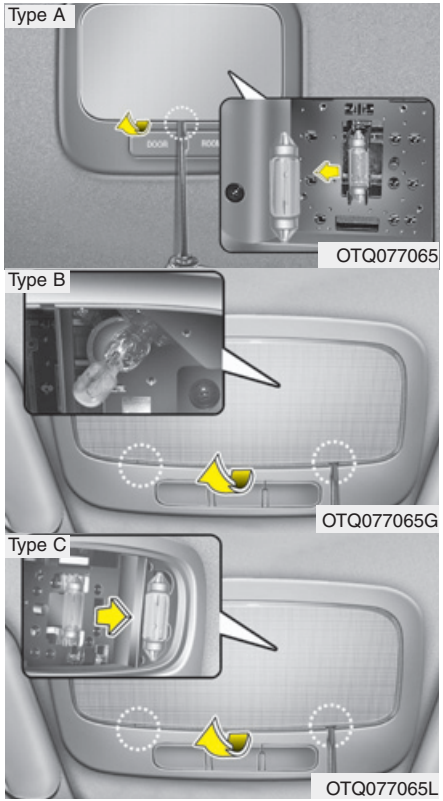

G220600AUN

Interior light bulb replacement

1. Using a flat-blade screwdriver, gently pry the lens from the interior light housing.
2. Remove the bulb by pulling it straight out.

⚠ WARNING

Prior to working on the Interior Lights, ensure that the "OFF" button is depressed to avoid burning your fingers or receiving an electric shock.

3. Install a new bulb in the socket.
4. Align the lens tabs with the interior light housing notches and snap the lens into place.

⚠ CAUTION

Use care not to dirty or damage lens, lens tab, and plastic housings.

APPEARANCE CARE

Exterior care

G230101AUN

Exterior general caution

It is very important to follow the label directions when using any chemical cleaner or polish. Read all warning and caution statements that appear on the label.

G230102CEN

Finish maintenance

Washing

To help protect your vehicle's finish from rust and deterioration, wash it thoroughly and frequently at least once a month with lukewarm or cold water.

If you use your vehicle for off-road driving, you should wash it after each off-road trip. Pay special attention to the removal of any accumulation of salt, dirt, mud, and other foreign materials. Make sure the drain holes in the lower edges of the doors and rocker panels are kept clear and clean.

Insects, tar, tree sap, bird droppings, industrial pollution and similar deposits can damage your vehicle's finish if not removed immediately.

Even prompt washing with plain water may not completely remove all these deposits. A mild soap, safe for use on painted surfaces, may be used.

After washing, rinse the vehicle thoroughly with lukewarm or cold water. Do not allow soap to dry on the finish.

⚠ CAUTION

- ***Do not use strong soap, chemical detergents or hot water, and do not wash the vehicle in direct sunlight or when the body of the vehicle is warm.***
- ***Be careful when washing the side windows of your vehicle. Especially, with high-pressure water. Water may leak through the windows and wet the interior.***
- ***To prevent damage to the plastic parts and lamps, do not clean with chemical solvents or strong detergents.***

⚠ WARNING - Wet brakes

After washing the vehicle, test the brakes while driving slowly to see if they have been affected by water. If braking performance is impaired, dry the brakes by applying them lightly while maintaining a slow forward speed.

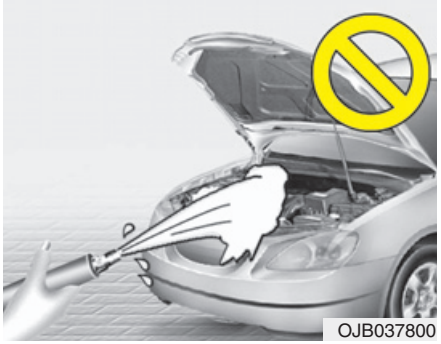

OJB037800

⚠ CAUTION

- ***Water washing in the engine compartment including high pressure water washing may cause the failure of electrical circuits located in the engine compartment.***
- ***Never allow water or other liquids to come in contact with electrical/electronic components inside the vehicle as this may damage them.***

Waxing

Wax the vehicle when water will no longer bead on the paint.

Always wash and dry the vehicle before waxing. Use a good quality liquid or paste wax, and follow the manufacturer's instructions. Wax all metal trim to protect it and to maintain its luster.

Removing oil, tar, and similar materials with a spot remover will usually strip the wax from the finish. Be sure to re-wax these areas even if the rest of the vehicle does not yet need waxing.

⚠ CAUTION

- ***Wiping dust or dirt off the body with a dry cloth will scratch the finish.***
- ***Do not use steel wool, abrasive cleaners, or strong detergents containing highly alkaline or caustic agents on chrome-plated or anodized aluminum parts. This may result in damage to the protective coating and cause discoloration or paint deterioration.***

G230103AUN

Finish damage repair

Deep scratches or stone chips in the painted surface must be repaired promptly. Exposed metal will quickly rust and may develop into a major repair expense.

✻ NOTICE

If your vehicle is damaged and requires any metal repair or replacement, be sure the body shop applies anti-corrosion materials to the parts repaired or replaced.

G230104AUN

Bright-metal maintenance

- To remove road tar and insects, use a tar remover, not a scraper or other sharp object.
- To protect the surfaces of bright-metal parts from corrosion, apply a coating of wax or chrome preservative and rub to a high luster.
- During winter weather or in coastal areas, cover the bright metal parts with a heavier coating of wax or preservative. If necessary, coat the parts with non-corrosive petroleum jelly or other protective compound.

G230105AUN

Underbody maintenance

Corrosive materials used for ice and snow removal and dust control may collect on the underbody. If these materials are not removed, accelerated rusting can occur on underbody parts such as the fuel lines, frame, floor pan and exhaust system, even though they have been treated with rust protection.

Thoroughly flush the vehicle underbody and wheel openings with lukewarm or cold water once a month, after off-road driving and at the end of each winter. Pay special attention to these areas because it is difficult to see all the mud and dirt. It will do more harm than good to wet down the road grime without removing it. The lower edges of doors, rocker panels, and frame members have drain holes that should not be allowed to clog with dirt; trapped water in these areas can cause rusting.

⚠ WARNING

After washing the vehicle, test the brakes while driving slowly to see if they have been affected by water. If braking performance is impaired, dry the brakes by applying them lightly while maintaining a slow forward speed.

G230106AUN

Aluminum or chrome wheel maintenance

The aluminum or chrome wheels are coated with a clear protective finish.

- Do not use any abrasive cleaner, polishing compound, solvent, or wire brushes on aluminum or chrome wheels. They may scratch or damage the finish.
- Clean the wheel when it has cooled.
- Use only a mild soap or neutral detergent, and rinse thoroughly with water. Also, be sure to clean the wheels after driving on salted roads. This helps prevent corrosion.
- Avoid washing the wheels with high-speed car wash brushes.
- Do not use any alkaline or acid detergent. It may damage and corrode the aluminum or chrome wheels coated with a clear protective finish.

G230107AUN

Corrosion protection

Protecting your vehicle from corrosion

By using the most advanced design and construction practices to combat corrosion, we produces cars of the highest quality. However, this is only part of the job. To achieve the long-term corrosion resistance your vehicle can deliver, the owner's cooperation and assistance is also required.

Common causes of corrosion

The most common causes of corrosion on your car are:

- Road salt, dirt and moisture that is allowed to accumulate underneath the car.
- Removal of paint or protective coatings by stones, gravel, abrasion or minor scrapes and dents which leave unprotected metal exposed to corrosion.

High-corrosion areas

If you live in an area where your car is regularly exposed to corrosive materials, corrosion protection is particularly important. Some of the common causes of accelerated corrosion are road salts, dust control chemicals, ocean air and industrial pollution.

Moisture breeds corrosion

Moisture creates the conditions in which corrosion is most likely to occur. For example, corrosion is accelerated by high humidity, particularly when temperatures are just above freezing. In such conditions, the corrosive material is kept in contact with the car surfaces by moisture that is slow to evaporate.

Mud is particularly corrosive because it is slow to dry and holds moisture in contact with the vehicle. Although the mud appears to be dry, it can still retain the moisture and promote corrosion.

High temperatures can also accelerate corrosion of parts that are not properly ventilated so the moisture can be dispersed. For all these reasons, it is particularly important to keep your car clean and free of mud or accumulations of other materials. This applies not only to the visible surfaces but particularly to the underside of the car.

To help prevent corrosion

You can help prevent corrosion from getting started by observing the following:

Keep your car clean

The best way to prevent corrosion is to keep your car clean and free of corrosive materials. Attention to the underside of the car is particularly important.

- If you live in a high-corrosion area — where road salts are used, near the ocean, areas with industrial pollution, acid rain, etc.—, you should take extra care to prevent corrosion. In winter, hose off the underside of your car at least once a month and be sure to clean the underside thoroughly when winter is over.
- When cleaning underneath the car, give particular attention to the components under the fenders and other areas that are hidden from view. Do a thorough job; just dampening the accumulated mud rather than washing it away will accelerate corrosion rather than prevent it. Water under high pressure and steam are particularly effective in removing accumulated mud and corrosive materials.
- When cleaning lower door panels, rocker panels and frame members, be sure that drain holes are kept open so that moisture can escape and not be trapped inside to accelerate corrosion.

Keep your garage dry

Don't park your car in a damp, poorly ventilated garage. This creates a favorable environment for corrosion. This is particularly true if you wash your car in the garage or drive it into the garage when it is still wet or covered with snow, ice or mud. Even a heated garage can contribute to corrosion unless it is well ventilated so moisture is dispersed.

Keep paint and trim in good condition

Scratches or chips in the finish should be covered with "touch-up" paint as soon as possible to reduce the possibility of corrosion. If bare metal is showing through, the attention of a qualified body and paint shop is recommended.

Bird droppings : Bird droppings are highly corrosive and may damage painted surfaces in just a few hours. Always remove bird droppings as soon as possible.

Don't neglect the interior

Moisture can collect under the floor mats and carpeting to cause corrosion. Check under the mats periodically to be sure the carpeting is dry. Use particular care if you carry fertilizers, cleaning materials or chemicals in the car.

These should be carried only in proper containers and any spills or leaks should be cleaned up, flushed with clean water and thoroughly dried.

Interior care

G230201CUN

Interior general precautions

Prevent chemicals such as perfume, cosmetic oil, sun cream, hand cleaner and air freshener from contacting the interior parts because they may cause damage or discoloration. If they do contact the interior parts, wipe them off immediately. See the instructions that follow for the proper way to clean vinyl.

⚠ CAUTION

Never allow water or other liquids to come in contact with electrical/electronic components inside the vehicle as this may damage them.

⚠ CAUTION

When cleaning leather products (steering wheel, seats etc.), use neutral detergents or low alcohol content solutions. If you use high alcohol content solutions or acid/alkaline detergents, the color of the leather may fade or the surface may get stripped off.

G230202AUN

Cleaning the upholstery and interior trim

Vinyl

Remove dust and loose dirt from vinyl with a whisk broom or vacuum cleaner. Clean vinyl surfaces with a vinyl cleaner.

Fabric

Remove dust and loose dirt from fabric with a whisk broom or vacuum cleaner. Clean with a mild soap solution recommended for upholstery or carpets. Remove fresh spots immediately with a fabric spot cleaner. If fresh spots do not receive immediate attention, the fabric can be stained and its color can be affected. Also, its fire-resistant properties can be reduced if the material is not properly maintained.

⚠ CAUTION

Using anything but recommended cleaners and procedures may affect the fabric's appearance and fire-resistant properties.

G230203AUN

Cleaning the lap/shoulder belt webbing

Clean the belt webbing with any mild soap solution recommended for cleaning upholstery or carpet. Follow the instructions provided with the soap. Do not bleach or re-dye the webbing because this may weaken it.

G230204AUN

Cleaning the interior window glass

If the interior glass surfaces of the vehicle become fogged (that is, covered with an oily, greasy or waxy film), they should be cleaned with glass cleaner. Follow the directions on the glass cleaner container.

⚠ CAUTION

Do not scrape or scratch the inside of the rear window. This may result in damage to the rear window defroster grid.

EMISSION CONTROL SYSTEM (IF EQUIPPED)

G270000AEN

The emission control system of your vehicle is covered by a written limited warranty. Please see the warranty information contained in the Service Passport in your vehicle.

Your vehicle is equipped with an emission control system to meet all applicable emission regulations.

There are three emission control systems, as follows.

(1) Crankcase emission control system
(2) Evaporative emission control system
(3) Exhaust emission control system

In order to assure the proper function of the emission control systems, it is recommended that you have your car inspected and maintained by an authorized HYUNDAI dealer in accordance with the maintenance schedule in this manual.

Caution for the Inspection and Maintenance Test (With Electronic Stability Program (ESP) system)

- **To prevent the vehicle from misfiring during dynamometer testing, turn the Electronic Stability Program (ESP) system off by pressing the ESP switch.**
- **After dynamometer testing is completed, turn the ESP system back on by pressing the ESP switch again.**

G270100AUN

1. Crankcase emission control system

The positive crankcase ventilation system is employed to prevent air pollution caused by blow-by gases being emitted from the crankcase. This system supplies fresh filtered air to the crankcase through the air intake hose. Inside the crankcase, the fresh air mixes with blow-by gases, which then pass through the PCV valve into the induction system.

G270200AEN

2. Evaporative emission control system

The Evaporative Emission Control System is designed to prevent fuel vapors from escaping into the atmosphere.

G270201AUN

Canister

Fuel vapors generated inside the fuel tank are absorbed and stored in the onboard canister. When the engine is running, the fuel vapors absorbed in the canister are drawn into the surge tank through the purge control solenoid valve.

G270202AUN

Purge Control Solenoid Valve (PCSV)

The purge control solenoid valve is controlled by the Engine Control Module (ECM); when the engine coolant temperature is low during idling, the PCSV closes so that evaporated fuel is not taken into the engine. After the engine warms-up during ordinary driving, the PCSV opens to introduce evaporated fuel to the engine.

G270300AUN

3. Exhaust emission control system

The Exhaust Emission Control System is a highly effective system which controls exhaust emissions while maintaining good vehicle performance.

G270301BUN

Vehicle modifications

This vehicle should not be modified. Modification of your vehicle could affect its performance, safety or durability and may even violate governmental safety and emissions regulations.

In addition, damage or performance problems resulting from any modification may not be covered under warranty.

- If you use unauthorized electronic devices, it may cause the vehicle to operate abnormally, wire damage, battery discharge and fire. For your safety, do not use unauthorized electronic devices.

G270302AUN

Engine exhaust gas precautions (carbon monoxide)

- Carbon monoxide can be present with other exhaust fumes. Therefore, if you smell exhaust fumes of any kind inside your vehicle, have it inspected and repaired immediately. If you ever suspect exhaust fumes are coming into your vehicle, drive it only with all the windows fully open. Have your vehicle checked and repaired immediately.

⚠ WARNING - Exhaust

Engine exhaust gases contain carbon monoxide (CO). Though colorless and odorless, it is dangerous and could be lethal if inhaled. Follow the instructions on this page to avoid CO poisoning.

- Do not operate the engine in confined or closed areas (such as garages) any more than what is necessary to move the vehicle in or out of the area.
- When the vehicle is stopped in an open area for more than a short time with the engine running, adjust the ventilation system (as needed) to draw outside air into the vehicle.
- Never sit in a parked or stopped vehicle for any extended time with the engine running.
- When the engine stalls or fails to start, excessive attempts to restart the engine may cause damage to the emission control system.

G270303CEN

Operating precautions for catalytic converters (if equipped)

⚠ WARNING - Fire

- **A hot exhaust system can ignite flammable items under your vehicle. Do not park, idle, or drive the vehicle over or near flammable objects, such as grass, vegetation, paper, leaves, etc.**
- **The exhaust system and catalytic system are very hot while the engine is running or immediately after the engine is turned off. Keep away from the exhaust system and catalytic, you may get burned. Also, do not remove the heat sink around the exhaust system, do not seal the bottom of the vehicle or do not coat the vehicle for corrosion control. It may present a fire risk under certain conditions.**

Your vehicle is equipped with a catalytic converter emission control device.

Therefore, the following precautions must be observed:

- Use only UNLEADED FUEL for gasoline engines.
- Do not operate the vehicle when there are signs of engine malfunction, such as misfire or a noticeable loss of performance.
- Do not misuse or abuse the engine. Examples of misuse are coasting with the ignition off and descending steep grades in gear with the ignition off.
- Do not operate the engine at high idle speed for extended periods (5 minutes or more).
- Do not modify or tamper with any part of the engine or emission control system. All inspections and adjustments must be made by an authorized HYUNDAI dealer.
- Avoid driving with a very low fuel level. If you run out of gasoline, it could cause the engine to misfire and result in excessive loading of the catalytic converter.

Failure to observe these precautions could result in damage to the catalytic converter and to your vehicle. Additionally, such actions could void your warranties.

Diesel Particulate Filter (if equipped)

The Diesel Particulate Filter (DPF) system removes the soot emitted from the vehicle.

Unlike a disposable air filter, the DPF system automatically burns (oxidizes) and removes the accumulated soot according to the driving condition. In other words, the active burning by engine control system and high exhaust gas temperature caused by normal/high driving condition burns and removes the accumulated soot.

However, if the vehicle continues to be driven at low speed for long time, the accumulated soot may not be automatically removed because of low exhaust gas temperature. In this particular case, the amount of soot is out of detection limit, the soot oxidation process by engine control system may not happen and the malfunction indicator light may blink.

When the malfunction indicator light blinks, it may stop blinking by driving the vehicle at more than 60km/h (37 mph) or at more than second gear with 1500 ~ 2000 engine rpm for a certain time (for about 25 minutes).

If the malfunction indicator light continues to be blinked in spite of the procedure, please visit an authorized HYUNDAI dealer and then check the DPF system.

If you continue to drive with the malfunction indicator light blinking for a long time, the DPF system can be damaged and fuel consumption can be worsen.

⚠ CAUTION - Diesel Fuel (if equipped with DPF)

It is recommended to use the regulated automotive diesel fuel for diesel vehicle equipped with the DPF system.

If you use diesel fuel including high sulfur (more than 50 ppm sulfur) and unspecified additives, it can cause the DPF system to be damaged and white smoke can be emitted.

Vehicle identification number (VIN) / 8-2
Vehicle certification label / 8-2
Tire specification and pressure label / 8-3
Engine number / 8-3
Air conditioner compressor label / 8-3

Consumer information

8

VEHICLE IDENTIFICATION NUMBER (VIN

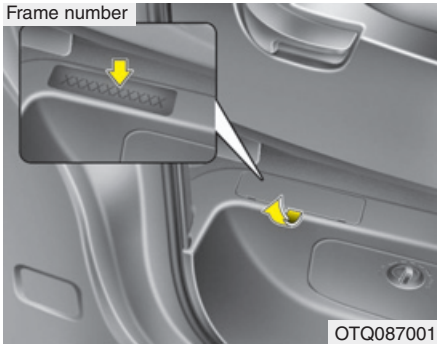

H010000BTQ

The vehicle identification number (VIN) is the number used in registering your car and in all legal matters pertaining to its ownership, etc.

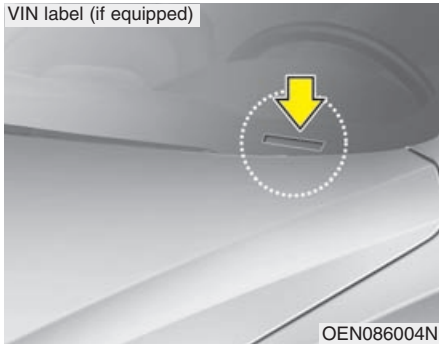

The VIN is also on a plate attached to the top of the dashboard. The number on the plate can easily be seen through the windshield from outside.

VEHICLE CERTIFICATION LABEL

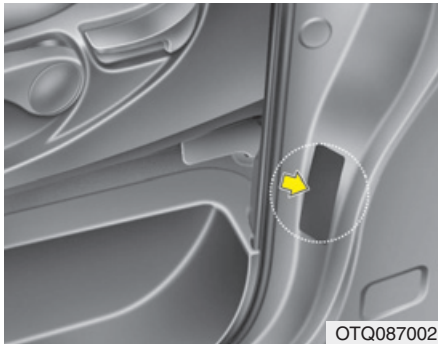

H020000AUN

The vehicle certification label attachted on the driver's (or front passenger's) side center pillar gives the vehicle identification number (VIN).

TIRE SPECIFICATION AND PRESSURE LABEL

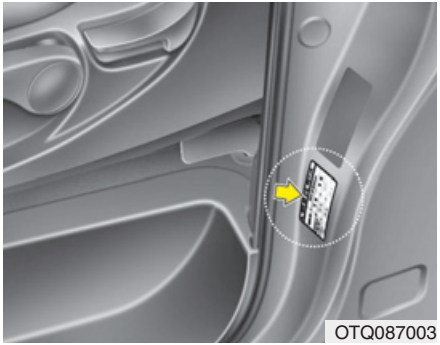
OTQ087003

H030000AUN

The tires supplied on your new vehicle are chosen to provide the best performance for normal driving.

The tire label located on the driver's side center pillar gives the tire pressures recommended for your car.

ENGINE NUMBER

4D56 Diesel engine

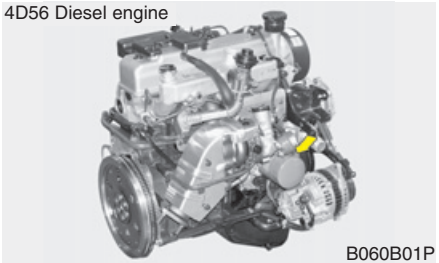
B060B01P

A2.5/A2 2.5 Diesel engine

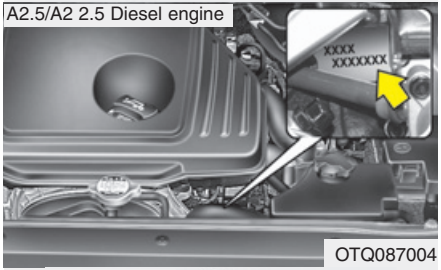

OTQ087004

Gasoline engine

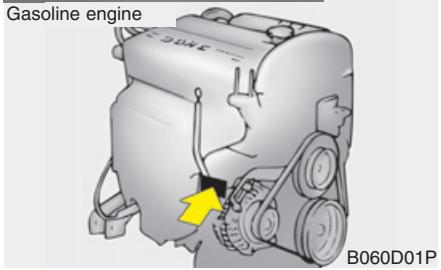
B060D01P

H04000AUN

The engine number is stamped on the engine block as shown in the drawing.

AIR CONDITIONER COMPRESSOR LABEL

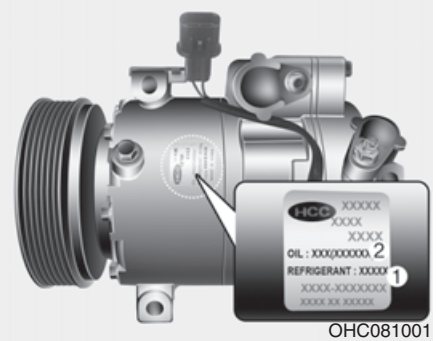

OHC081001

A compressor label informs you the type of compressor your vehicle is equipped with such as model, supplier part number, production number, refrigerant (1) and refrigerant oil (2).

Dimensions / 9-2
Bulb wattage / 9-2
Tires and wheels / 9-3
Recommended lubricants and capacities / 9-4

Specifications

9

DIMENSIONS

I010000ATQ

Item	mm (in)
Overall length	5125 (201.8)
Overall width	1920 (75.6)
Overall height	1925 (75.8)
Front tread	1685 (66.3)
Rear tread	1660 (65.4)
Wheelbase	3200 (126.0)

Above dimensions are based on 12-seater/8-seater vehicle.

BULB WATTAGE

I030000ATQ

Light Bulb	Wattage
Headlights (Low)	55
Headlights (High)	55
Front turn signal lights	21
Position lights	5
Side repeater lights*	5
Front fog lights*	27
Rear fog light*	21
Stop and tail lights	21/5
Rear turn signal lights	21
Back-up lights	16
High mounted stop light*	5
License plate lights	5
Room lamps	10
Luggage lamp*	10
Step lamp*	5

* : If equipped

TIRES AND WHEELS

I020000BTQ

Except China

Item	Tire size	Wheel size	Inflation pressure bar (psi, kPa)						Wheel lug nut torque kg•m (lb•ft, N•m)
			Wagon				Van		
			Normal load *		Maximum load				
			Front	Rear	Front	Rear	Front	Rear	
Full size tire	215/70R16C	6.5Jx16	2.9 (42, 290)	3.25 (47,325)	2.9 (42, 290)	3.5 (51,350)	2.9 (42, 290)	3.5 (51,350)	9~11 (65~79, 88~107)

* Normal load : Up to 3 persons

RECOMMENDED LUBRICANTS AND CAPACITIES

I040000HTQ

To help achieve proper engine and powertrain performance and durability, use only lubricants of the proper quality. The correct lubricants also help promote engine efficiency that results in improved fuel economy.

These lubricants and fluids are recommended for use in your vehicle.

Lubricant			Volume (*l* / US qt.)	Classification
Engine oil *1 *2 (drain and refill) Recommends Shell HELIX Motor oils	Diesel	A2.5 / A2 2.5	7.4 (7.82)	VGT*3 - without DPF*5 : API Service CH-4 or above, ACEA B4 - with DPF*5 : ACEA C3 WGT*4 - without DPF*5 : API Service CF-4 or above, ACEA B4 - with DPF*5 : ACEA C3
		4D56	5.4 (5.71)	API Service CF-4 or above, ACEA B2 or B3
	Gasoline		5.1 (5.39)	API Service SM*6, ILSAC GF-4 or above
Engine oil consumption	Normal driving condition		MAX. 1 *l* /1500 km	-
	Severe driving condition		MAX. 1 *l* /1000 km	-
Manual transmission fluid	A2.5 Diesel		3.0 (3.17)	API Service GL-4 SAE 75W/85
	A2 2.5 Diesel		2.2 (2.33)	
	4D56 Diesel / Gasoline		1.95 (2.06)	

*1: Refer to the recommended SAE viscosity numbers on page 9-6.

*2: Engine oils labeled Energy Conserving Oil are now available. Along with other additional benefits, they contribute to fuel economy by reducing the amount of fuel necessary to overcome engine friction. Often, these improvements are difficult to measure in everyday driving, but in a year's time, they can offer significant cost and energy savings.

*3: VGT : Variable Geometry Turbocharger

*4: WGT : Waste Gate Turbocharger

*5: DPF : Diesel Particulate Filter

*6: If the API service SM engine oil is not available in your country, you are able to use API service SL.

Lubricant			Volume (*l* / US qt.)	Classification
Automatic transmission fluid	A2.5 / A2 2.5 Diesel		10.0 (10.60)	APOLLOIL ATF RED-1
	4D56 Diesel / Gasoline		8.0 (8.45)	CASTLE AUTO FLUID T-IV, DIAMOND ATF SP-I or other brands approved by Hyundai Motor Co.
Power steering			0.9~1.0 (0.95~1.06)	PSF-3
Coolant	Wagon	Diesel	13 (13.74)	Mixture of antifreeze and water (Ethylene glycol base coolant for aluminium radiator)
		Gasoline	10.2 (10.8)	
	Van	Diesel	10 (10.75)	
		Gasoline	7.1 (7.5)	
Brake fluid			0.7~0.8 (0.7~0.8)	FMVSS116 DOT-3 or DOT-4
Rear axle oil			2.1 (2.23)	The temperate zone (-30°C~30°C) : API GL-4 (SAE 90) The torrid zone (30°C~) : API GL-4 (SAE 140) The frigid zone (~-30°C) : API GL-5 (SAE 80)
Fuel			75 (19.81 US gal.)	-

Recommends Engine oil (For Europe A2 2.5 Diesel engine)

Supplier	Product
SK	ZIC LS 5W-30
Chevron	KIXX D1 5W-30
Total	QUARTZ INEO MC3 5W-30
Shell	HELIX ULTRA AP 5W-30

I040100DUN

Recommended SAE viscosity number

⚠ CAUTION

Always be sure to clean the area around any filler plug, drain plug, or dipstick before checking or draining any lubricant. This is especially important in dusty or sandy areas and when the vehicle is used on unpaved roads. Cleaning the plug and dipstick areas will prevent dirt and grit from entering the engine and other mechanisms that could be damaged.

Engine oil viscosity (thickness) has an effect on fuel economy and cold weather operating (engine start and engine oil flowability). Lower viscosity engine oils can provide better fuel economy and cold weather performance, however, higher viscosity engine oils are required for satisfactory lubrication in hot weather. Using oils of any viscosity other than those recommended could result in engine damage.

When choosing an oil, consider the range of temperature your vehicle will be operated in before the next oil change. Proceed to select the recommended oil viscosity from the chart.

Temperature Range for SAE Viscosity Numbers

Temperature										
	°C	-30	-20	-10	0	10	20	30	40	50
	(°F)		-10	0	20	40	60	80	100	120
Gasoline Engine Oil *1							20W-50			
						15W-40				
					10W-30					
		5W-20*2, 5W-30								
Diesel Engine Oil							15W-40			
					10W-30/10W-40					
				5W-30/5W-40						
		0W-30*3								

*1. For better fuel economy, it is recommended to use the engine oil of a viscosity grade SAE 5W-20*2 (API SM / ILSAC GF-4). However, if the engine oil is not available in your country, select the proper engine oil using the engine oil viscosity chart.

*2. In Middle East, do not use the engine oil of viscosity grade SAE 5W-20.

*3. It is only for extreme cold area and to be restricted by driving condition and area. (Especially, not recommended for sustained high loaded and high speed operation.)