YAMAHA

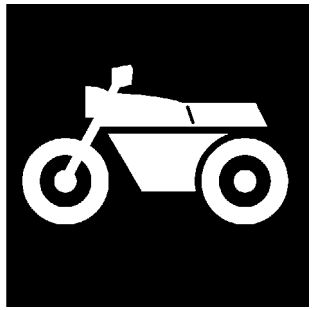

CATALOGO DE REPUESTOS

TDM900 (5PSK) EUROPE

1J5PS-352S1

( )

YAMAHA GENUINE Parts & Accessories

TDM900
CATALOGO DE REPUESTOS
©2009 por Yamaha Motor Co., Ltd.
1ª edición, octubre 2009
Todos los derechos reservados.
Toda reproducción o uso no autorizado
sin el consentimiento escrito de
Yamaha Motor Co., Ltd.
quedan expresamente prohibidos
Impreso en Japón.

PROLOGO

Este catálogo de repuestos corresponde a las piezas para el o los modelos que figuran en la página de portada. Al formular el pedido de repuestos, se ruega citar este catálogo y especificar correctamente el número y el nombre de las piezas.

1. Las modificaciones y agregados que se hayan realizado después de la edición de este Catálogo de Repuestos, serán anunciados en las Informaciones de Recambios.
   Es recomendable que se hagan las correcciones necesarias en el Catálogo de Repuestos de acuerdo con las Informaciones de Recambios.

2. Abreviaciones
   En este. Catálogo de Repuestos se emplean las siguientes abreviaciones.

   "UR" Usar el número de partes especificado
   "UN" Usar la cantidad necesaria
   "AP" Piezas sustitutivas
   "LM" Fabricación local (Hay que pedir los repuestos en las cercanías)
   "F#" Nº de bastidor (Nº aplicable a la máquina)
   "O/S" Sobredimensionado

3. La cantidad de componentes para el montaje
   - Los componentes, suministrados como conjunto, se describen con un punto (.) que precede al nombre del parte como se indica a continuación.
   - La numeración que aparece a la derecha de cada descripción indica la cantidad de partes por cada unidad de conjunto.

CODIGO Nº	DESCRIPCION	CANT.	OBSERVACIONES
2F5–83310–60	ENSAMBLAJE DE LA LUZ	2	
115–83311–60	.BOMBILLA (6V–18W)	1	

4. Los colores de los componentes se indican como sigue en la columna de "OBSERVACIONES".

CODIGO Nº	DESCRIPCION	CANT.	OBSERVACIONES
2N4–24110–00–X5	COMP. DEL TANQUE	2	MXR
3J1–24240–10	.GRAFICO, DEL TANQUE	1	PARA MXR

5. Debe tenerse en cuenta que las ilustraciones sirven como guia para la búsqueda de los números de partes y no deben usarse para el montaje. Durante el montaje, se recomienda usar el manual de taller correspondiente.

6. EL asterisco (*) antes del número de referencia indica los elementos modificados después de la primera edición.

7. Números de serie

Nº de Serie del motor

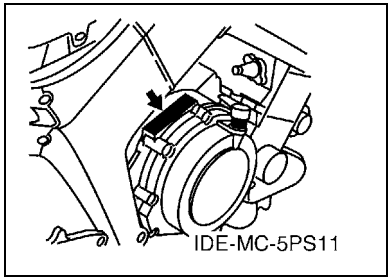

Nº de Serie del bastidor

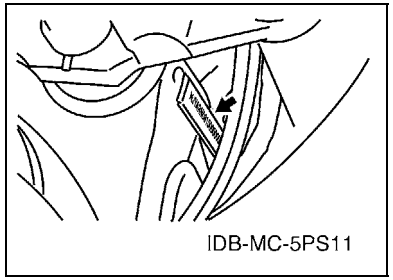

8. Códigos de color aplicables (El símbolo (*) muestra el color de modelo.)

Abreviatura	Nombre de color	Código de color
LGB	LOW GLOSS BLACK	0098
MDS(*)	MIDNIGHT SILVER	007M
MNM1	MAT GRAY METALLIC 1	1089
SMX(*)	BLACK METALLIC X	0903

ROTULO DE MODELO

(1) El rótulo llamada “Rótulo de Modelo” está en la ubicación indicada abajo en el (3). Cuando se utilice este catálogo de repuestos, se ruega cotejar entre el “código de modelo–número de código de producción” del catálogo y el “código de modelo–número de código de producción” indicado en el Rótulo de Modelo fijado en el producto correspondiente.

(2) Indicación del “Rótulo de Modelo”

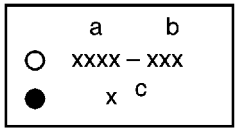

a: Código de tipo de Modelo

b: Número de código de Producción

c: Tipo de color

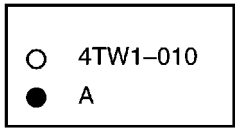

(3) Ubicación de fijación del Rótulo de Modelo

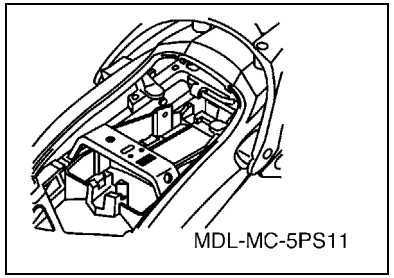

(4) Información de Color

Código de Modelo	Código de tipo de color	Código de color	Nombre de color	Abreviatura
5PSK	A	0903	BLACK METALLIC X	SMX
	B	007M	MIDNIGHT SILVER	MDS

(5) Código de Modelo–Número de código de Producción del Modelo Listado en este Catálogo de Repuestos

Código de Modelo	Número de Código de Producción	País (destino)
5PSK	010	AUSTRIA
		CZECHO
		FRANCE
		GERMANY
		HUNGARY
		ITALY
		SPAIN
		SWITZERLAND

Código de Modelo	Número de Código de Producción	País (destino)

CONTENIDO

MOTOR

CULATA DE CILINDRO 1
CILINDRO 3
CIGUENAL & PISTON 4
VALVULA 5
ARBOL DE LEVAS & CADENA 7
BOMBA DE AGUA 8
RADIADOR & MANGUERA 9
BOMBA DE ACEITE 11
ADMISION 14
ADMISION 2 16
DESCARGA 18
CARTER 19
CUBIERTA DE CARTER 1 21
EMBRAGUE DEL ARRANQUE 23
EMBRAGUE 24
TRANSMISION 26
LEVA DE CAMBIO & HORQUILLA 28
EJE DE CAMBIO & PEDAL 29

SHASIS

CUADRO 30
GUARDABARRO 32
CUBIERTA LATERAL 35
BRAZO TRASERO 36
SUSPENSION TRASERO 38
DIRECCION 39
HORQUILLA DELANTERA 40
DEPOSITO DE COMBUSTIBLE 42
ASIENTO 44
RUEDA DELANTERA 45
CALIBRE FRENO DELANTERA 46
RUEDA TRASERA 47
CALIBRE FRENO TRASERA 48
MANILLAR & CABLE 49
CILINDRO MAESTRO DELANTERO 50
SOPORTE & APOYAPIE 51
CILINDRO MAESTRO TRASERO 53
BOVEDA 1 55
GENERADOR 58
MOTOR DE ARRANQUE 59
LUZ DE DESTELLADOR 60
MEDIDOR 61
FARO DELANTERO 62
LUZ DE COLA 63
INTERRUPTOR DE MANILLAR&PALANC 64
EQUIPO ELECTRICO 1 65
EQUIPO ELECTRICO 2 67

INDICE

INDICE NUMERICO 69

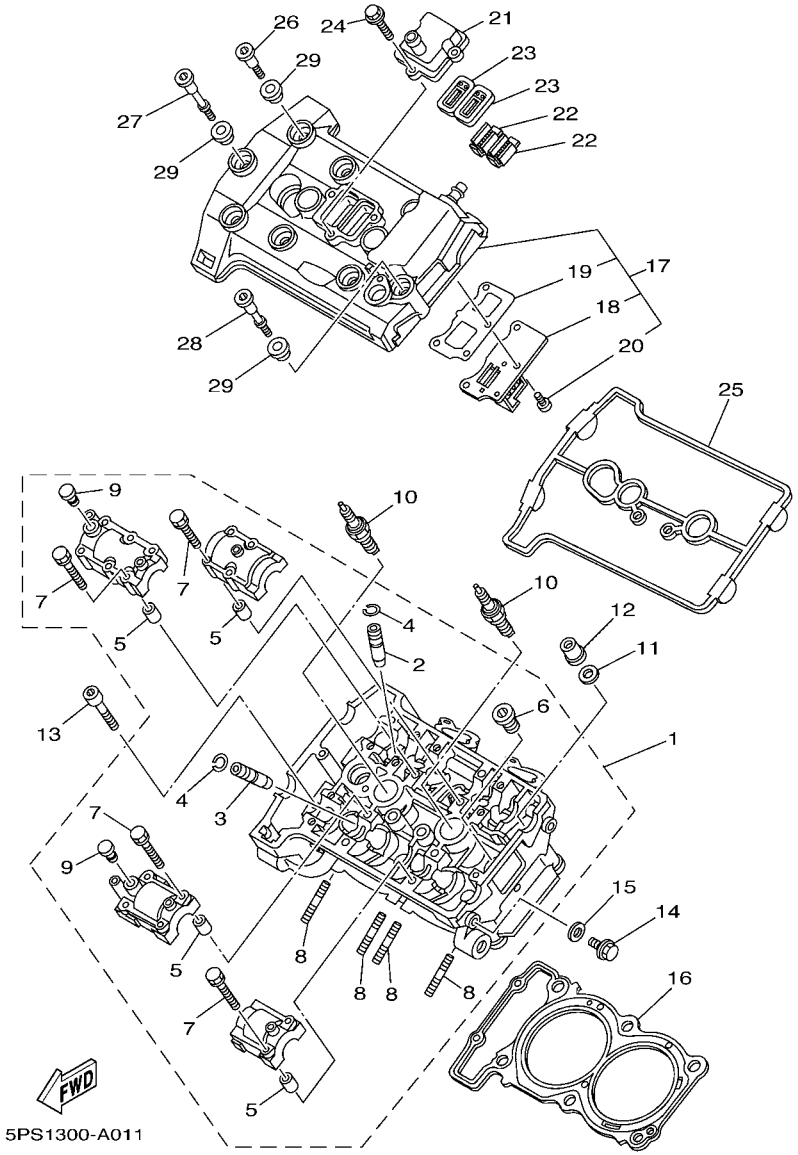

FIG. 1 CULATA DE CILINDRO

REF. Nº	CODIGO Nº	DESCRIPCION	5PSK					OBSERVACIONES
1	5PS–11101–10	CULATA DE CILINDRO COMPLETA	1					
2	3LD–11133–10	.GUIA DE VALVULA 1	6					
3	3LD–11134–10	.GUIA DE VALVULA 2	4					
4	93440–10109	.SEGURO	10					
5	91808–16023	.PASADOR DE CLAVIJA	8					
6	90340–18101	.TORNILLO, DE DRENAJE	2					
7	90105–06153	.TORNILLO	16					
8	95617–08625	.PERNO DE PUNTAL	4					
9	90338–10150	.TAPON	2					
10	94701–00241	BUJIA (NGK DPR8EA-9)	2					UR
	94701–00242	BUJIA (ND X24EPR-U9)	2					UR
11	90201–103M4	ARANDELA PLANA	6					
12	90179–10414	TUERCA	6					
13	91317–06150	PERNO	2					
14	95024–08012	PERNO, BRIDA	1					
15	90430–08119	JUNTA	1					
16	5PS–11181–00	JUNTA, DE CULATA 1	1					
17	5PS–11190–10	TAPA CULATA DE CILINDRO 1	1					
18	5PS–11165–00	.PLACA RESPIRADERO	1					
19	5PS–11169–00	.EMAPQ CBTA.DE RESP.	1					
20	90149–05009	.TORNILLO DE REGLAJE	3					
21	5PS–14899–00	TAPA, DE CAJA	1					
22	5PS–1482K–00	PLACA	2					
23	5PS–14890–00	VALVULA DE LAMINAS COMPLETA	2					
24	95027–06020	PERNO, DE BRIDA	3					
25	5PS–11193–00	EMPAQUE	1					
26	90109–066F0	PERNO	6					

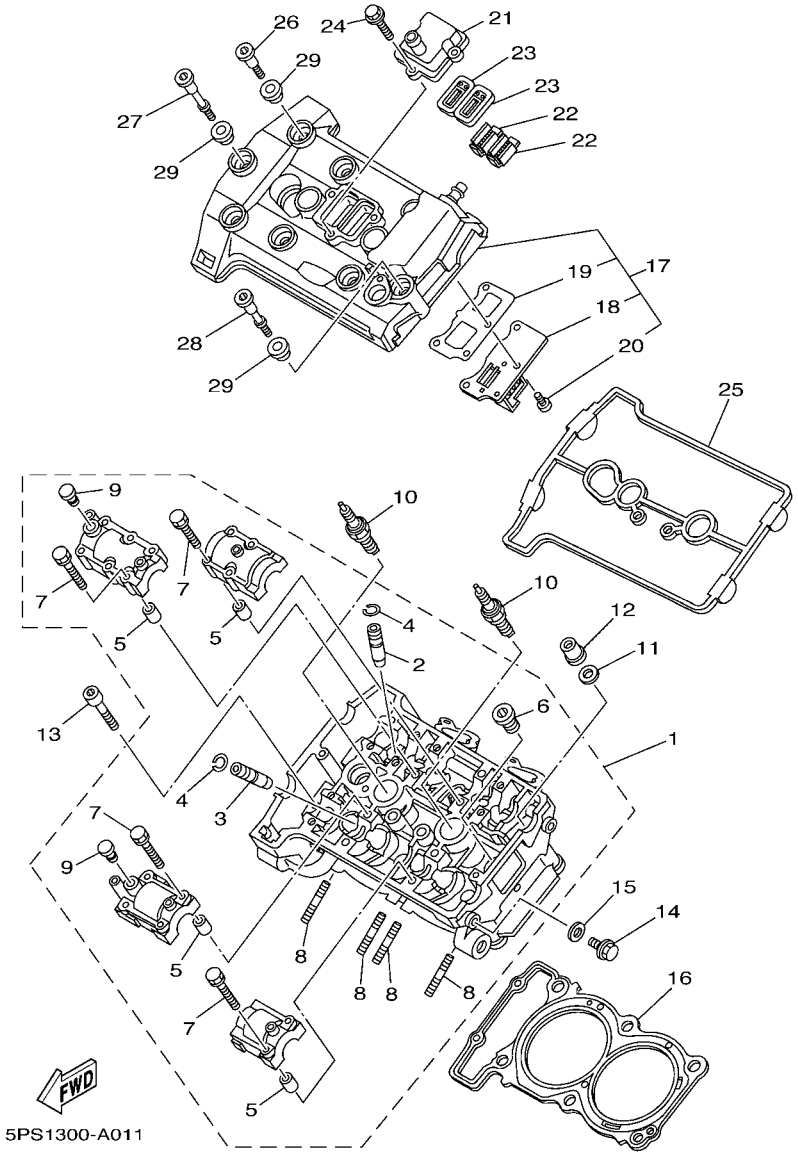

FIG. 1 CULATA DE CILINDRO

REF. Nº	CODIGO Nº	DESCRIPCION	5PSK					OBSERVACIONES
27	90109–06044	PERNO	1					
28	90109–06045	PERNO	1					
29	4KG–1111G–00	CASQUILLO DE GOMA	8					

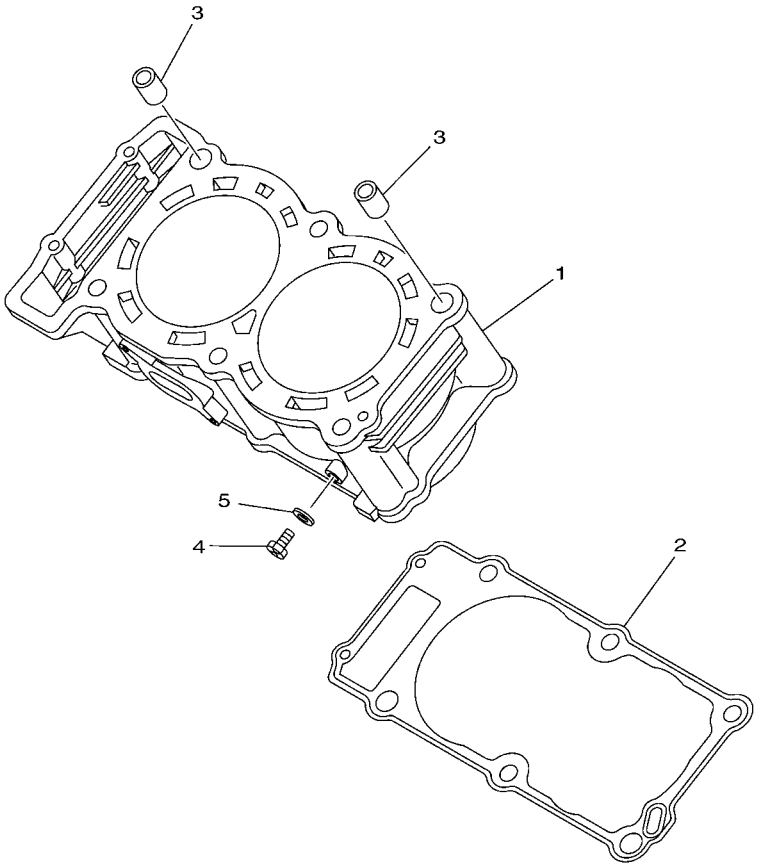

5PS1300-A021

FIG. 2 CILINDRO

REF. Nº	CODIGO Nº	DESCRIPCION	5PSK					OBSERVACIONES
1	5PS–11311–10	CILINDRO 1	1					
2	5PS–11351–00	JUNTA, DE CILINDRO	1					
3	99530–14016	PASADOR, DE ESPIGA	2					
4	90153–06029	TORNILLO HEXAGONAL	1					
5	90430–06014	JUNTA	1					

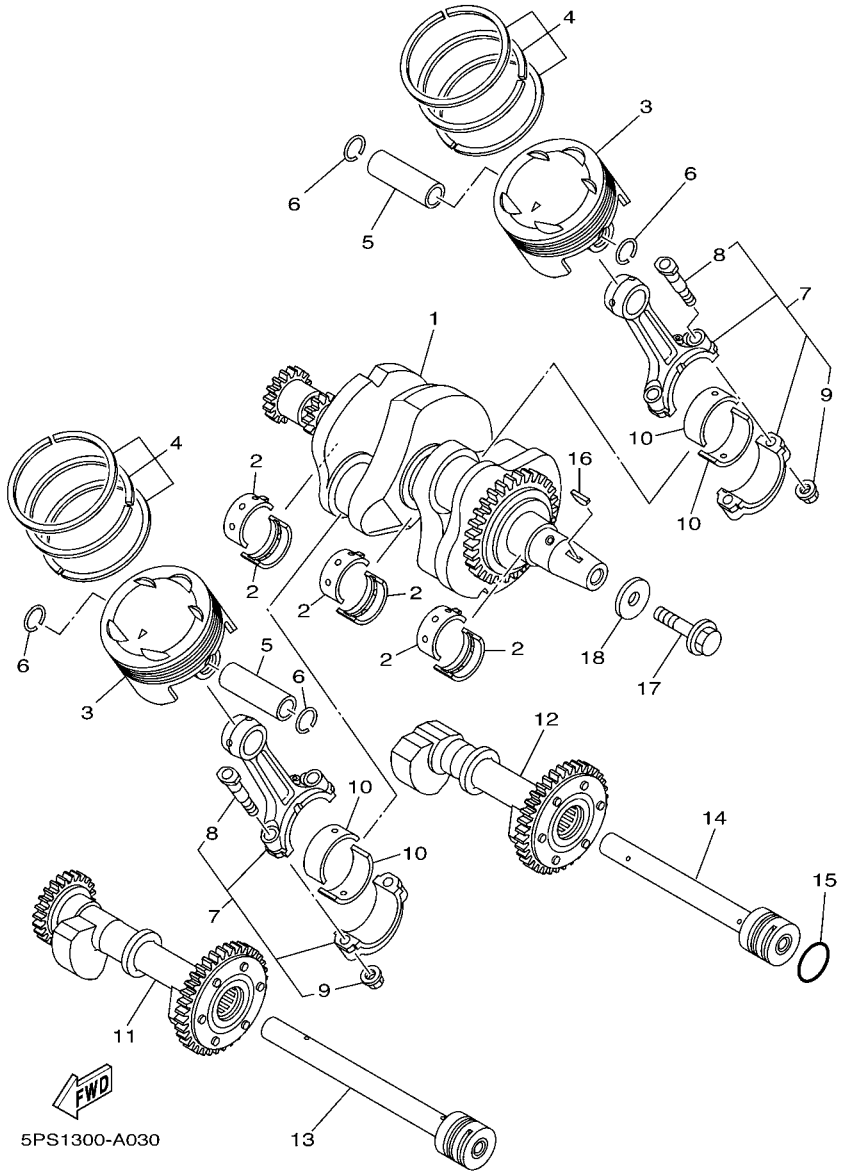

FIG. 3 CIGUENAL & PISTON

REF. Nº	CODIGO Nº	DESCRIPCION	5PSK					OBSERVACIONES
1	5PS–11400–00	CIGUENAL COMPLETO	1					
2	3LD–11416–00	COJINETE PLANO 1	6					UR AZUL
	3LD–11416–10	COJINETE PLANO 1	6					UR NEGRO
	3LD–11416–20	COJINETE PLANO 1	6					UR CASTANO
	3LD–11416–30	COJINETE PLANO 1	6					UR VERDE
	3LD–11416–40	COJINETE PLANO 1	6					UR AMARILLO
	3LD–11416–50	COJINETE PLANO 1	6					UR ROSA
	3LD–11416–60	COJINETE PLANO 1	6					UR ROJO
3	5PS–11631–00	PISTON (NORMA)	2					
4	5BE–11603–00	JUEGO DE ANILLOS (NORMA)	2					
5	5PS–11633–00	PASADOR, PISTON	2					
6	93450–22146	SEGURO	4					
7	5PS–11650–00	BIELA COMPLETA	2					
8	3LD–11654–00	.TORNILLO DE BIELA	2					
9	90179–09379	.TUERCA	2					
10	3LD–11656–00	COJINETE PLANO	4					UR AZUL
	3LD–11656–10	COJINETE PLANO	4					UR NEGRO
	3LD–11656–20	COJINETE PLANO	4					UR CASTANO
	3LD–11656–30	COJINETE PLANO	4					UR VERDE
11	4NX–11500–01	COMPENSADOR COMPLETA	1					
12	4NX–11510–01	COMPENSADOR, 2	1					
13	3LD–11583–00	EJE, COMPENSADOR 1	1					
14	3LD–11584–00	EJE, COMPENSADOR 2	1					
15	93210–30660	ANILLO O	1					
16	90280–05029	CUNA WOODRUFF	1					
17	90105–12584	TORNILLO	1					
18	90201–121H0	ARANDELA PLANA	1					

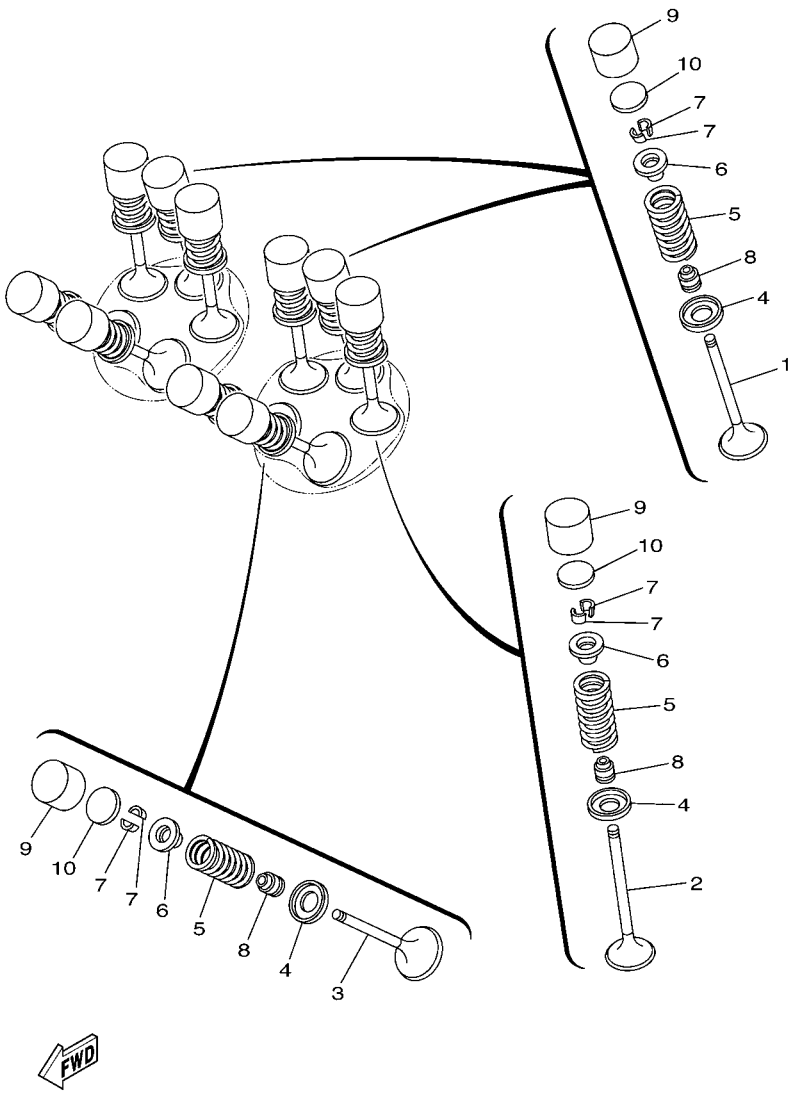

5PS1300-A040

FIG. 4 VALVULA

REF. Nº	CODIGO Nº	DESCRIPCION	5PSK					OBSERVACIONES
1	3LD–12111–02	VALVULA DE ADMISION	2					
2	3LD–12112–02	VALVULA, DE ADMISION 2	4					
3	5PS–12121–00	VALVULA DE ESCAPE	4					
4	1WG–12116–00	ASIENTO RESORTE DE VALVULA	10					
5	3LD–12113–00	RESORTE VALVULA INTERNA	10					AZUL
6	3LD–12117–00	RETEN RESORTE DE VALVULA	10					
7	3LD–12118–00	SEGURO DE VALVULA	20					
8	51Y–12119–00	SELLO DE ACEITE VALVULA	10					
9	1WG–12153–21	LEVANTADOR DE VALVULA	10					UR AZUL
	1WG–12153–31	LEVANTADOR DE VALVULA	10					UR ROJO
10	3LD–12168–00	COJIN, AJUSTADOR (1.20)	10					UR
	3LD–12168–20	COJIN, AJUSTADOR (1.25)	10					UR
	3LD–12168–40	COJIN, AJUSTADOR (1.30)	10					UR
	3LD–12168–60	COJIN, AJUSTADOR (1.35)	10					UR
	3LD–12168–80	COJIN, AJUSTADOR (1.40)	10					UR
	3LD–12168–A0	COJIN, AJUSTADOR (1.45)	10					UR
	3LD–12168–F0	COJIN, AJUSTADOR (1.50)	10					UR
	3LD–12168–H1	COJIN, AJUSTADOR (1.55)	10					UR
	3LD–12168–K1	COJIN, AJUSTADOR (1.60)	10					UR
	3LD–12168–M1	COJIN, AJUSTADOR (1.65)	10					UR
	3LD–12168–R1	COJIN, AJUSTADOR (1.70)	10					UR
	3LD–12168–U1	COJIN, AJUSTADOR (1.75)	10					UR
	3LD–12168–W1	COJIN, AJUSTADOR (1.80)	10					UR
	3LD–12168–Y1	COJIN, AJUSTADOR (1.85)	10					UR
	3LD–12169–11	COJIN, AJUSTADOR (1.90)	10					UR
	3LD–12169–31	COJIN, AJUSTADOR (1.95)	10					UR
	3LD–12169–50	COJIN, AJUSTADOR (2.00)	10					UR

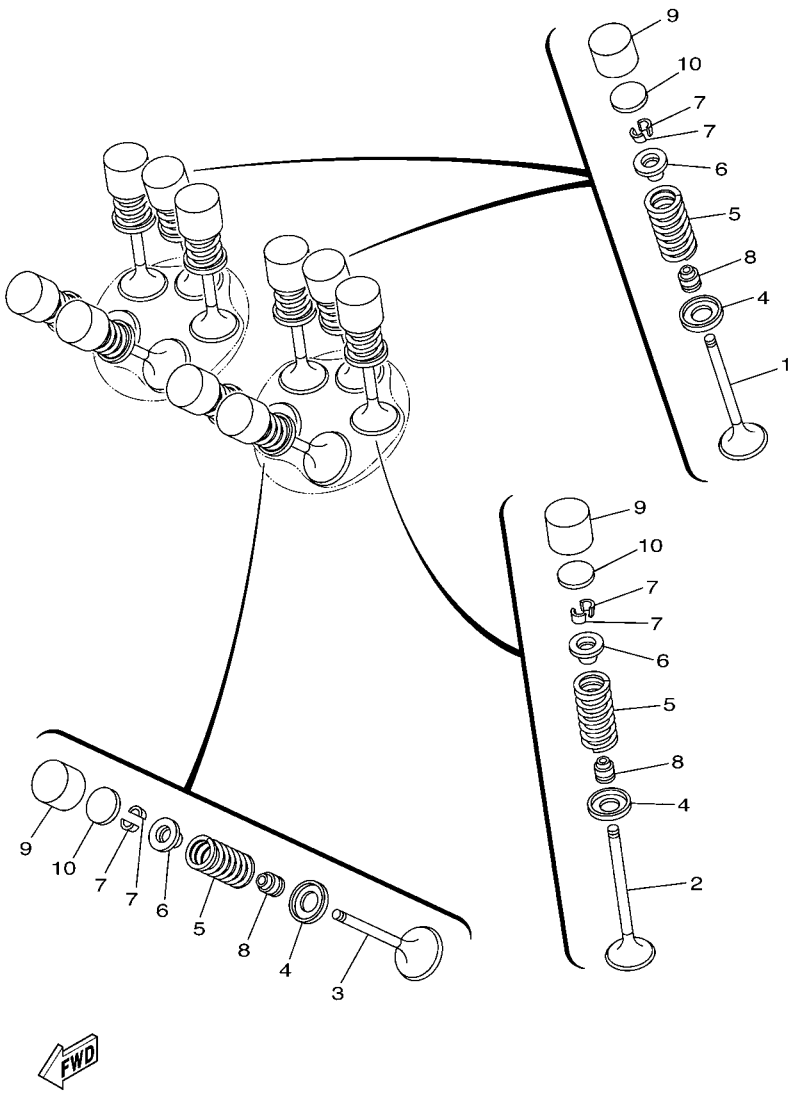

5PS1300-A040

FIG. 4 VALVULA

REF. Nº	CODIGO Nº	DESCRIPCION	5PSK					OBSERVACIONES
10	3LD–12169–70	COJIN, AJUSTADOR (2.05)	10					UR
	3LD–12169–90	COJIN, AJUSTADOR (2.10)	10					UR
	3LD–12169–E0	COJIN, AJUSTADOR (2.15)	10					UR
	3LD–12169–G0	COJIN, AJUSTADOR (2.20)	10					UR
	3LD–12169–J0	COJIN, AJUSTADOR (2.25)	10					UR
	3LD–12169–L0	COJIN, AJUSTADOR (2.30)	10					UR
	3LD–12169–N0	COJIN, AJUSTADOR (2.35)	10					UR
	3LD–12169–T0	COJIN, AJUSTADOR (2.40)	10					UR

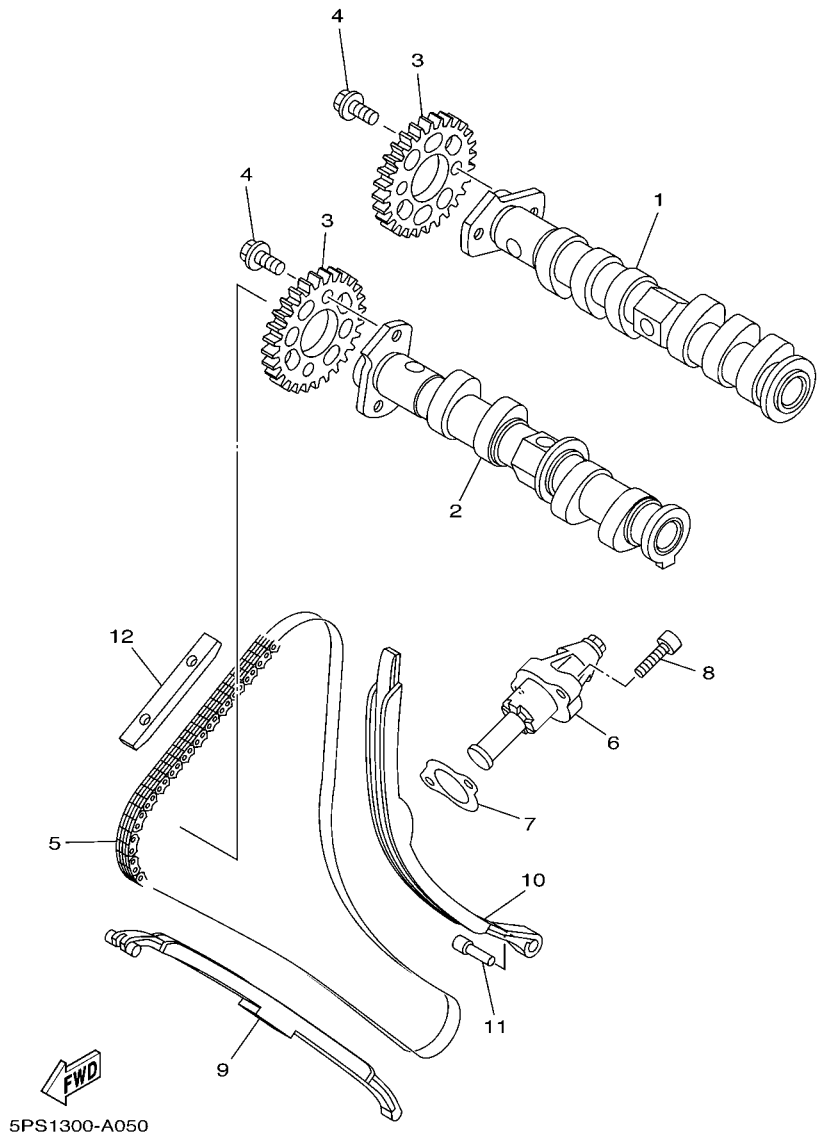

FIG. 5 ARBOL DE LEVAS & CADENA

REF. Nº	CODIGO Nº	DESCRIPCION	5PSK					OBSERVACIONES
1	5PS–12171–00	ARBOL DE LEVAS 1	1					
2	5PS–12180–00	ARBOL DE LEVAS COMPLETO 2	1					
3	3LD–12176–00	CATALINA DE CADENA	2					
4	90105–07004	TORNILLO	4					
5	94591–40138	CADENA (82RH2015-138L)	1					
6	5PS–12210–20	TENSOR CADENA DE LEVA	1					
7	5JW–12213–00	EMPAQUE DE CAJA TENSOR	1					
8	91314–06020	TORNILLO ALLEN	2					
9	3LD–12251–00	AMORTIGUADOR CADENA 1	1					
10	5PS–12252–00	AMORTIGUADOR CADENA 2	1					
11	3LD–12247–00	EJE TENSOR	1					
12	5BE–12241–00	TOPE DE GUIA 2	1					

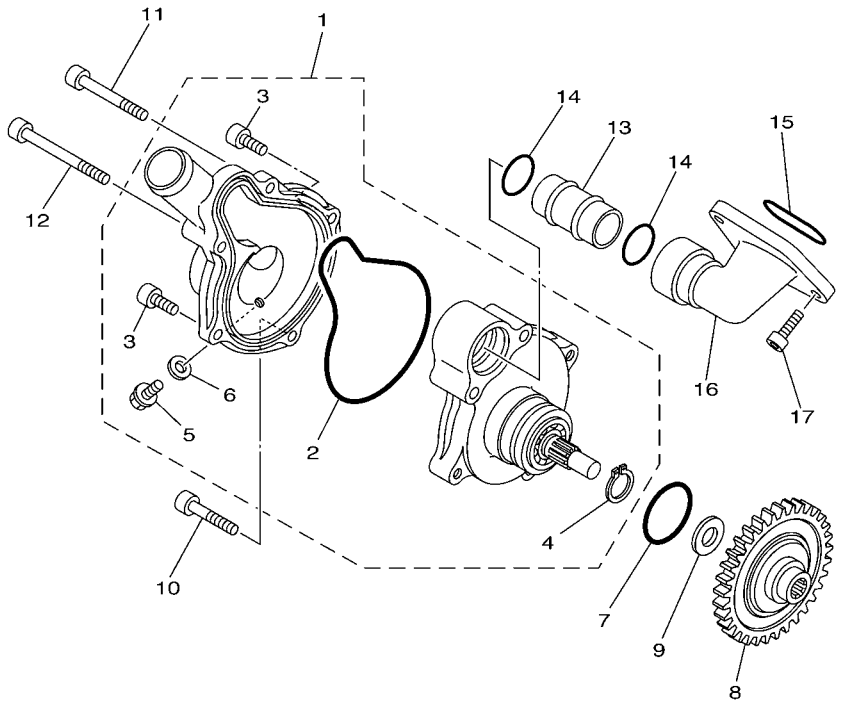

5PS1300-A060

FIG. 6 BOMBA DE AGUA

REF. Nº	CODIGO Nº	DESCRIPCION	5PSK					OBSERVACIONES
1	5PS–12420–10	BOMBA DE AGUA COMPLETA	1					
2	3LD–12439–00	.ANILLO O	1					
3	91314–06020	.TORNILLO ALLEN	2					
4	99009–12400	.PRESILLA REDONDA	1					
5	95024–06012	.PERNO, BRIDA	1					
6	90430–06014	.JUNTA	1					
7	93210–33133	ANILLO O	1					
8	3VD–12459–00	ENGRANAJE EJE IMPULSOR	1					
9	90201–127E1	ARANDELA PLANA	1					
10	91314–06030	TORNILLO ALLEN	1					
11	91314–06045	TORNILLO ALLEN	1					
12	91314–06060	TORNILLO ALLEN	1					
13	3LD–12481–00	TUBO 1	1					
14	93210–21190	ANILLO O	2					
15	93210–357A2	ANILLO O	1					
16	5PS–12469–10	CONDUCTO	1					
17	91314–06016	TORNILLO ALLEN	2					

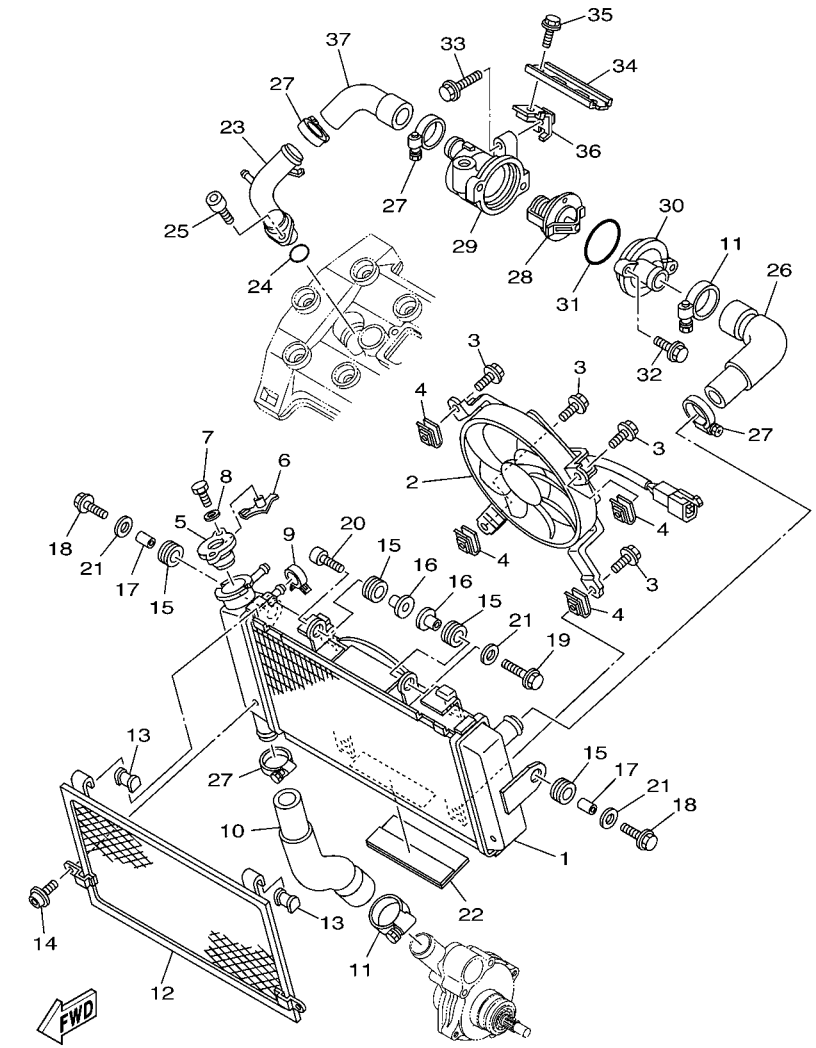

5PS1300-A070

FIG. 7 RADIADOR & MANGUERA

REF. Nº	CODIGO Nº	DESCRIPCION	5PSK					OBSERVACIONES
1	5PS–12461–00	RADIADOR COMPLETO	1					
2	5PS–12405–00	COMPRESOR	1					
3	90119–06044	TORNILLO CON ARANDELA	4					
4	1AA–12535–00	EMPAQUETADURA	4					
5	4FL–12462–00	TAPON, DEL RADIADOR	1					
6	1KT–12437–00	TOPE	1					
7	97007–05012	PERNO	1					
8	92907–05600	ARANDELA	1					
9	90467–10038	PRESILLA	1					
10	5PS–12578–00	MANGUERA 3	1					
11	90450–38040	BRIDA, MANGUERA	2					
12	5PS–12467–00	CUBIERTA DEL RADIADOR	1					
13	1UF–12435–00	EMPAQUE	2					
14	90111–06037	TORNILLO	2					
15	90480–15363	TAPON	4					
16	90387–0614M	ESPACIADOR	2					
17	90387–0714B	ESPACIADOR	2					
18	95807–06025	TORNILLO	2					
19	95807–06030	TORNILLO	1					
20	91317–06025	PERNO	1					
21	90201–06071	ARANDELA PLANA	3					
22	5PS–12465–00	AMORTIGUADOR DE RADIADOR	1					
23	4NX–12482–00	TUBO 2	1					
24	93210–18417	ANILLO O	1					
25	91317–06016	PERNO	1					
26	5PS–12576–00	MANGUERA 1	1					
27	90450–32015	BRIDA, MANGUERA	4					

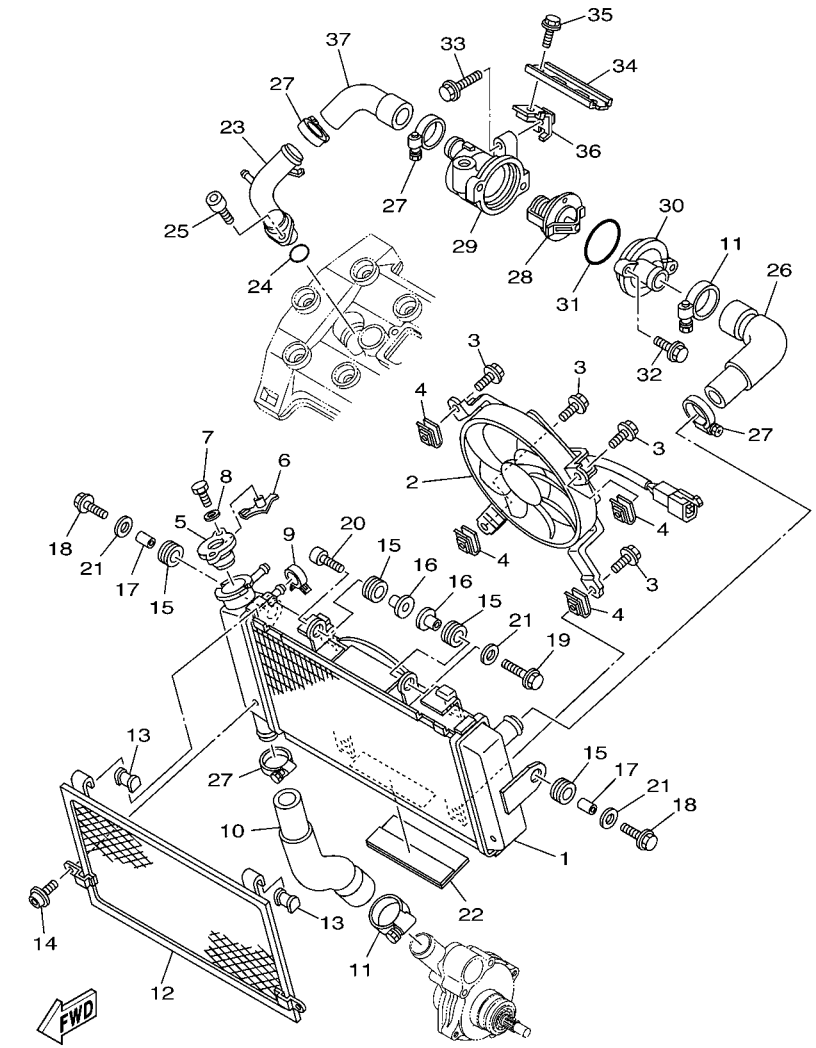

5PS1300-A070

FIG. 7 RADIADOR & MANGUERA

REF. Nº	CODIGO Nº	DESCRIPCION	5PSK					OBSERVACIONES
28	1AE–12410–00	TERMOSTATO CONJUNTO	1					
29	5PS–12417–00	ENCAJE DE TERMOSTATO	1					
30	4NX–12413–00	CUBIERTA TERMOSTATO	1					
31	93210–49046	ANILLO O	1					
32	95022–06020	PERNO, DE BRIDA	2					
33	95027–06025	PERNO, DE BRIDA	1					
34	5PS–1244E–00	SOPORTE 1	1					
35	95027–06010	PERNO, DE BRIDA	2					
36	5PS–1244F–00	SOPORTE 2	1					
37	5PS–12579–00	MANGUERA 4	1					

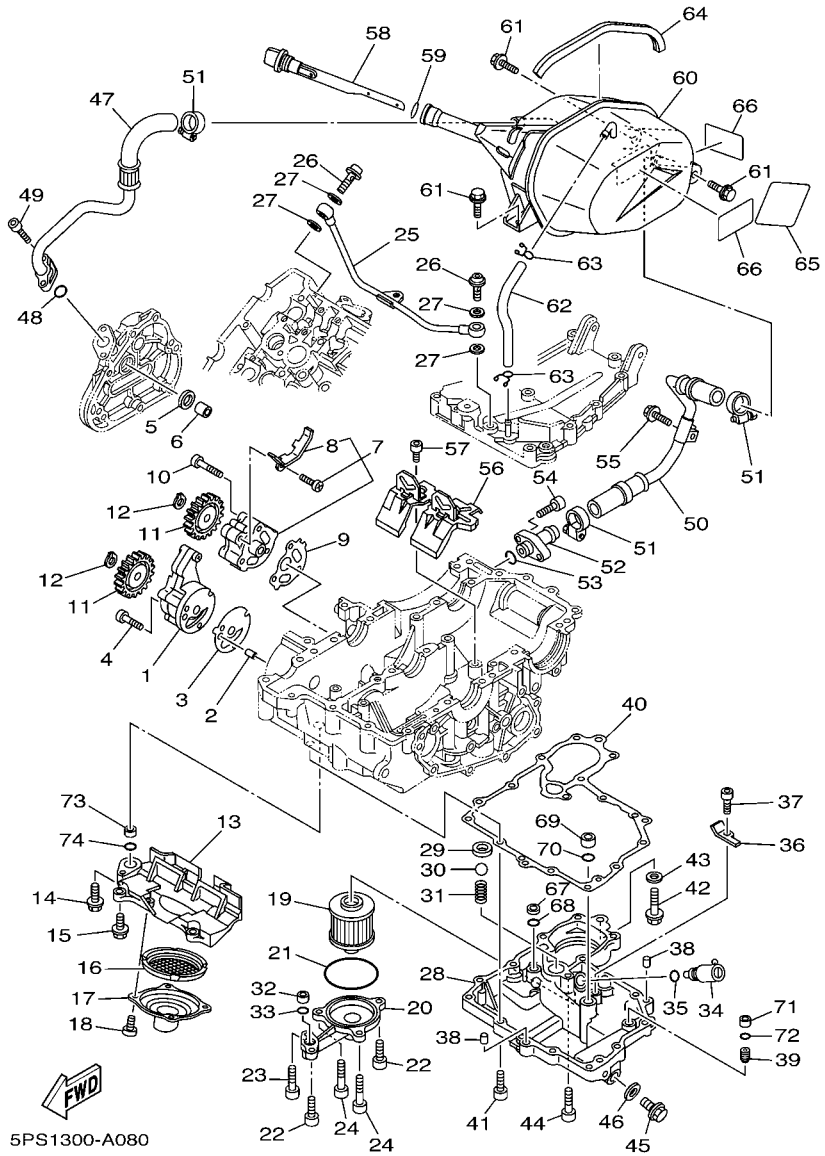

FIG. 8 BOMBA DE ACEITE

REF. Nº	CODIGO Nº	DESCRIPCION	5PSK					OBSERVACIONES
1	3LD–13300–00	BOMBA DE ACEITE COMPLETA	1					
2	99530–08012	PASADOR, DE ESPIGA	1					
3	5PS–13329–00	EMPAQUE TAPA DE BOMBA	1					
4	98507–06045	TORNILLO DE CABEZA PLANA	3					
5	90430–14131	JUNTA	1					
6	90387–120W5	ESPACIADOR	1					
7	4NX–13303–00	COMBA DE ACEITE COMPLETA, 2	1					
8	3LD–13371–00	.PLACA	1					
9	3LD–13339–00	EMPAQUETADURA, CUBIERTA BOMBA	1					
10	98507–06035	TORNILLO DE CABEZA PLANA	3					
11	3VD–13325–00	ENGRANAJE IMPULSOR DE BOMBA 1	2					
12	99009–11400	PRESILLA REDONDA	2					
13	3VD–13412–00	CAJA DE FILTRO	1					
14	95027–06025	PERNO, DE BRIDA	1					
15	95027–06020	PERNO, DE BRIDA	4					
16	3VD–13415–00	SELLO COLADOR ACEITE	1					
17	5PS–13411–00	FILTRO DE ACEITE	1					
18	90110–06018	TORNILLO ALLEN	4					
19	5JX–13440–00	ELEMENTO FILTRO DE ACEITE	1					
20	5PS–13447–10	TAPA DEL ELEMENTO	1					
21	93210–64297	ANILLO O	1					
22	91314–06020	TORNILLO ALLEN	2					
23	91314–06030	TORNILLO ALLEN	1					
24	91314–06040	TORNILLO ALLEN	2					
25	5PS–13161–00	TUBO CONDUCTOR 1	1					
26	90401–10002	PERNO DE UNION	2					
27	90430–10188	JUNTA	4					

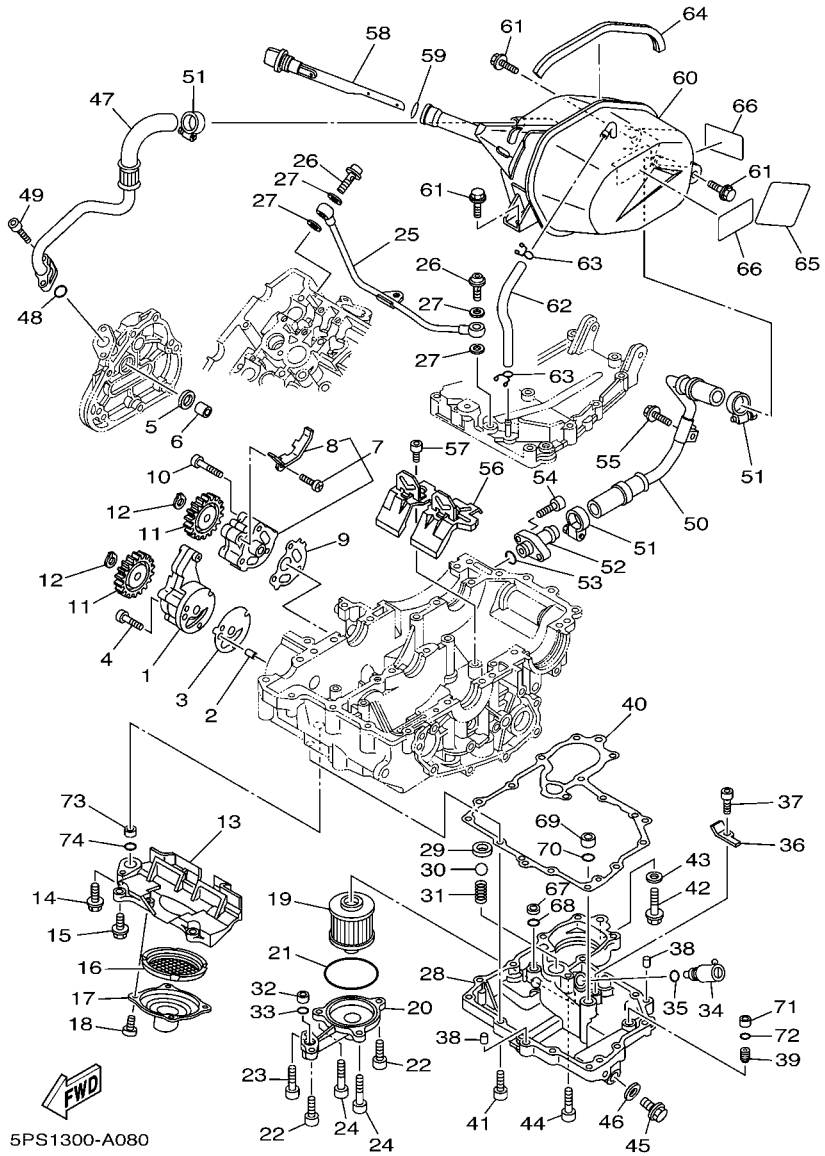

FIG. 8 BOMBA DE ACEITE

REF. Nº	CODIGO Nº	DESCRIPCION	5PSK					OBSERVACIONES
28	5PS–13417–10	TAPA DE FILTRO	1					
29	3LD–13113–00	ASIENTO BOLA RETENSORA	1					
30	93505–08030	BOLA	1					
31	90501–104F9	RESORTE DE COMPRESION	1					
32	90387–106W6	ESPACIADOR	1					
33	93210–12790	ANILLO O	1					
34	11H–13490–00	VALVELA DE DESCOMPRESION	1					
35	93210–10096	ANILLO O	1					
36	3LD–13151–00	SOPORTE	1					
37	90110–06018	TORNILLO ALLEN	1					
38	99530–08016	PASADOR, DE ESPIGA	2					
39	4H7–15138–00	BOQUILLA 1	1					
40	5PS–13414–02	EMPAQUE DE TAPA FILTRO	1					
41	91314–06025	TORNILLO ALLEN	13					
42	95024–10040	PERNO, BRIDA	1					
43	90430–10188	JUNTA	1					
44	91314–06035	TORNILLO ALLEN	1					
45	90340–14132	TORNILLO, DE DRENAJE	1					
46	214–11198–01	EMPAQUE	1					
47	5PS–13464–00	MANGUERA DE ACEITE 1	1					
48	93210–13657	ANILLO O	1					
49	91314–06020	TORNILLO ALLEN	2					
50	5PS–13465–00	MANGUERA DE ACEITE 2	1					
51	90450–25037	BRIDA, MANGUERA	3					
52	3VD–13416–00	TUBO DE ACEITE 1	1					
53	93210–13657	ANILLO O	1					
54	90110–06093	TORNILLO ALLEN	2					

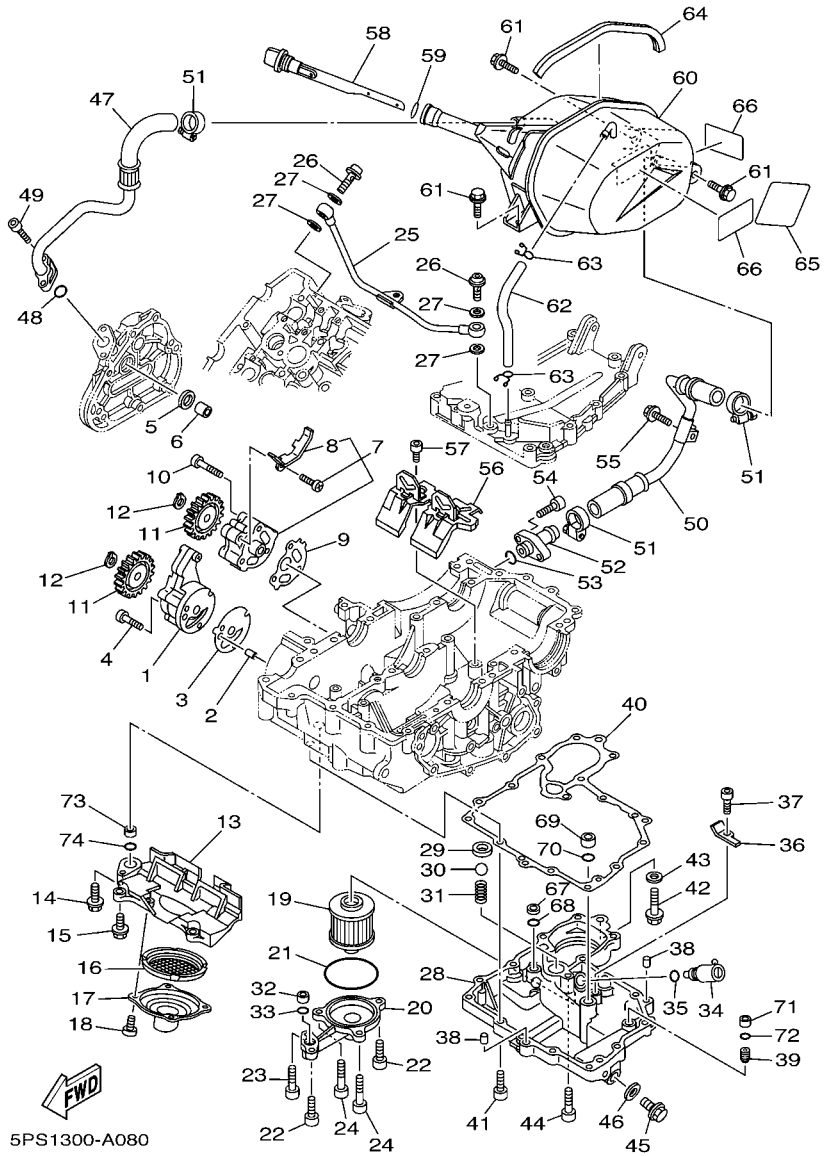

FIG. 8 BOMBA DE ACEITE

REF. Nº	CODIGO Nº	DESCRIPCION	5PSK					OBSERVACIONES
55	90109–06056	PERNO	1					
56	5PS–13317–00	PLACA DEFLECTORA	1					
57	90110–06018	TORNILLO ALLEN	2					
58	5PS–21761–00	MEDIDOR DE NIVEL	1					
59	93210–21190	ANILLO O	1					
60	5PS–21750–10	DEPOSITO DE ACEITE COMPLETO	1					
61	95827–06014	TORNILLO	3					
62	90445–11026	TUBO	1					
63	90467–10008	PRESILLA	2					
64	5JX–24188–00	MOLDURA DEPOSITO COMBUST.	1					
65	5BM–21652–00	PROTECTOR	1					
66	5BM–21268–00	SELLO	2					
67	90387–085N0	ESPACIADOR	1					
68	93210–10096	ANILLO O	1					
69	90387–106W6	ESPACIADOR	1					
70	93210–12790	ANILLO O	1					
71	90387–06761	ESPACIADOR	1					
72	93210–07135	ANILLO O	1					
73	90387–130W6	ESPACIADOR	1					
74	93210–15566	ANILLO O	1					

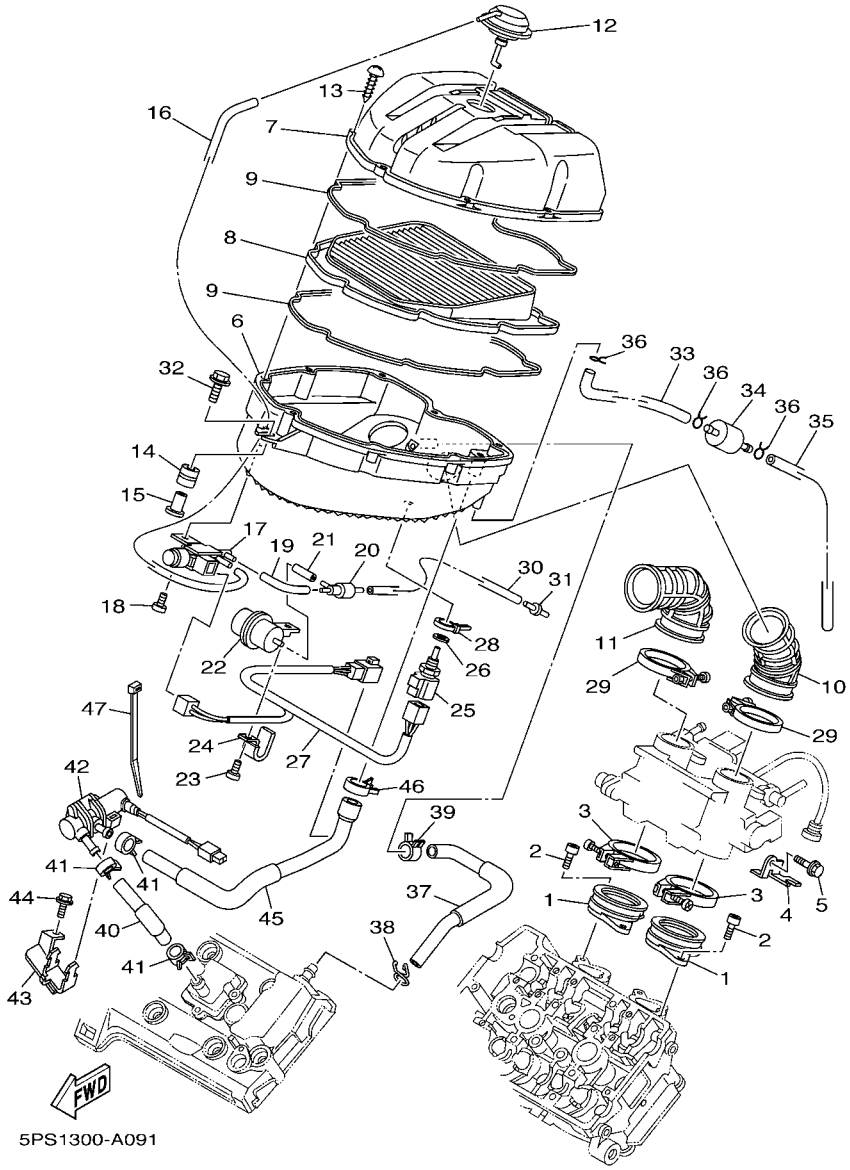

FIG. 9 ADMISION

REF. Nº	CODIGO Nº	DESCRIPCION	5PSK					OBSERVACIONES
1	5PS–13586–00	TOBERA DE CARBURADOR 1	2					
2	91317–06020	PERNO	4					
3	90450–63001	BRIDA, MANGUERA	2					
4	5PS–14414–00	SOPORTE 2	1					
5	95027–06010	PERNO, DE BRIDA	1					
6	5PS–14411–00	CAJA FILTRO DEL AIRE 1	1					
7	5PS–14421–00	CAJA FILTRO DEL AIRE 2	1					
8	5PS–14451–00	ELEMENTO DEL FILTRO DEL AIRE	1					
9	5PS–14452–00	SELLO	2					
10	5PS–14453–00	UNION DEL FILTRO DEL AIRE 1	1					
11	5PS–14463–00	UNION DE FILTRO DE AIRE 2	1					
12	5PS–14545–00	DIAFRAGMA	1					
13	97707–50020	TORNILLO ROSCA HEMBRA	8					
14	5PS–14435–00	ANILLO PROTECTOR	1					
15	5PS–14264–00	ESPACIADOR	1					
16	5PS–14419–00	TUBO	1					
17	5PS–1410H–00	SOLENOIDE VALVULA	1					
18	98907–05012	TORNILLO DE LIGAR	1					
19	5PS–14148–00	TUBO	1					
20	5PS–14552–00	VALVULA DE RETENCION	1					
21	90445–08010	TUBO	1					
22	5PS–1446E–00	DEPOSITO, COMPENSACION	1					
23	98907–05016	TORNILLO DE LIGAR	1					
24	90462–05005	BRIDA	1					
25	4BH–83591–00	UNIDAD TERMOSTATO	1					
26	90430–12202	JUNTA	1					
27	5PS–82386–00	EXTENSION, ARNES DE CABLES	1					

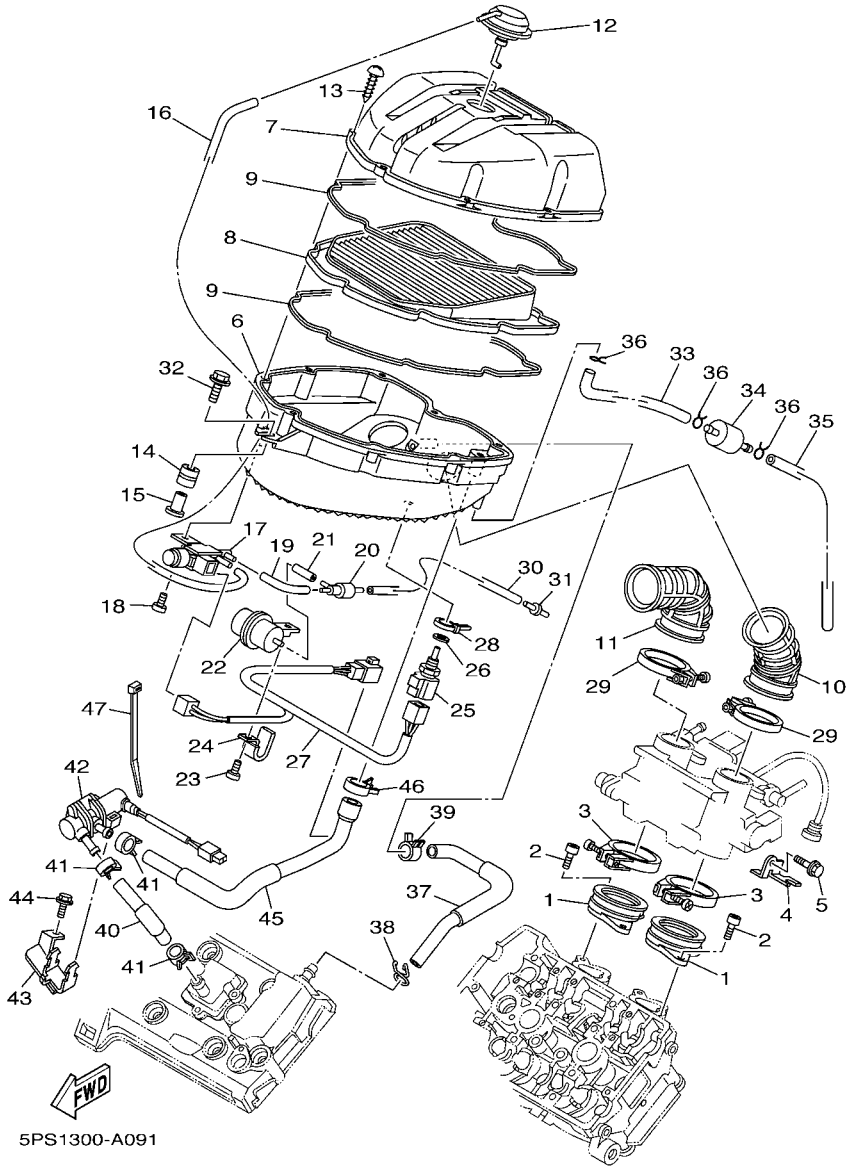

FIG. 9 ADMISION

REF. Nº	CODIGO Nº	DESCRIPCION	5PSK					OBSERVACIONES
28	5Y9–12491–00	GRAMPA 1	1					
29	90450–52002	BRIDA, MANGUERA	2					
30	90445–08024	TUBO	1					
31	5PS–14568–00	UNION	1					
32	90119–06214	TORNILLO CON ARANDELA	1					
33	5PS–1443E–00	TUBO, DRENAJE	1					
34	4X7–2149Y–00	FILTRO COMPLETO	1					
35	90445–116H6	TUBO (L570)	1					
36	90467–11106	PRESILLA	3					
37	5PS–11166–10	TUBO RESPIRADERO 1	1					
38	90467–14015	PRESILLA	1					
39	90468–08104	PRESILLA	1					
40	5PS–14881–00	TUBO 1	1					
41	90467–17003	PRESILLA	3					
42	5PS–14840–00	VALVULA, CORTE DE AIRE	1					
43	5PS–14834–00	SOPORTE	1					
44	95027–06010	PERNO, DE BRIDA	1					
45	5PS–14882–10	TUBO 2	1					
46	90467–20086	PRESILLA	1					
47	90465–10098	BRIDA	1					

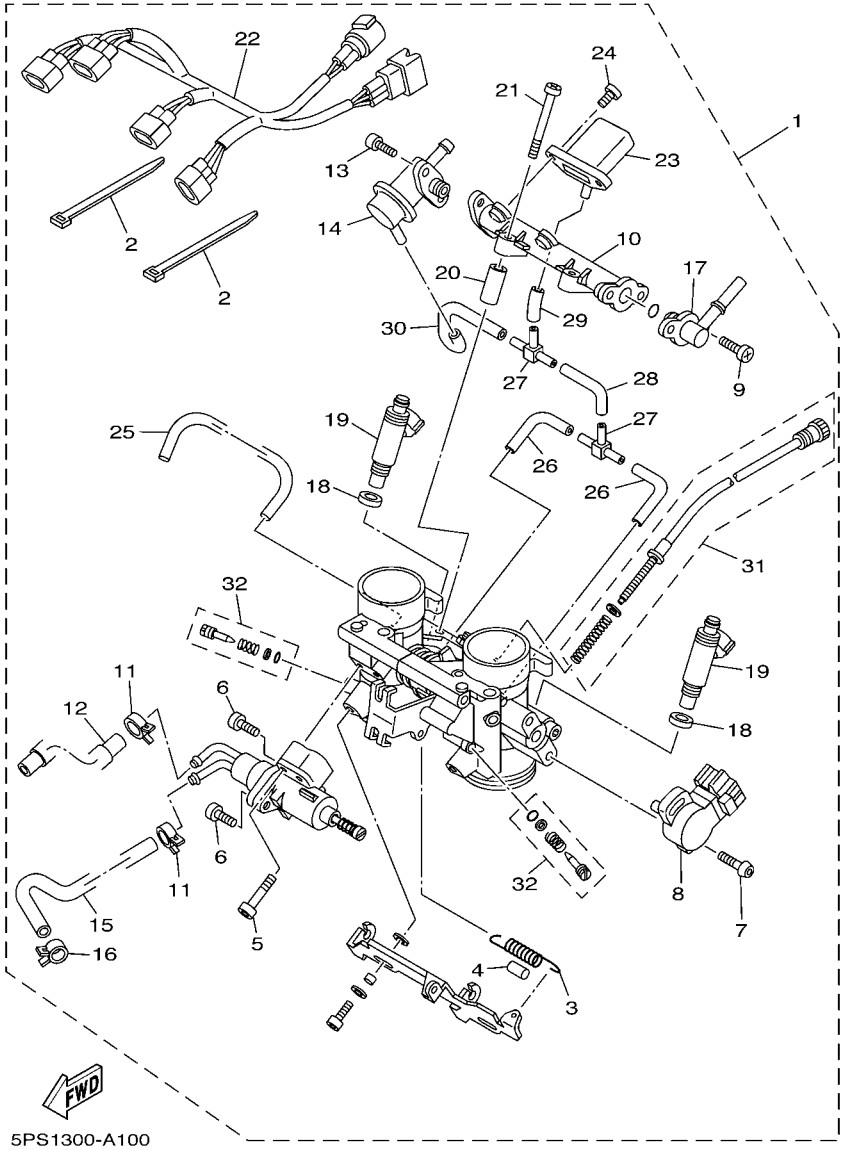

FIG. 10 ADMISION 2

REF. Nº	CODIGO Nº	DESCRIPCION	5PSK					OBSERVACIONES
1	5PS–13750–30	CAJA DE ACELERADOR COMPL.	1					
2	5Y9–12491–00	.GRAMPA 1	2					
3	5JW–14589–00	.RESORTE	1					
4	5DM–14936–00	.ASIENTO DE RESORTE	1					
5	98507–05030	.TORNILLO DE CABEZA PLANA	2					
6	98507–05014	.TORNILLO DE CABEZA PLANA	2					
7	8CC–14216–10	.TORNILLO	2					
8	3P6–85885–00	.TERMICA SENSORIO	1					
9	98507–05010	.TORNILLO DE CABEZA CON PLANA	2					
10	5PS–13938–00	.TUBO DE ADMISION	1					
11	90467–11090	.PRESILLA	2					
12	5PS–1243E–00	.TUBO 2	1					
13	98507–05010	.TORNILLO DE CABEZA CON PLANA	2					
14	5PS–13906–00	.REGULADOR	1					
15	5PS–1243A–00	.TUBO 1	1					
16	90467–09037	.PRESILLA	1					
17	5PS–12881–00	.TAPA INJECTO DE COMBUSTIBLE 1	1					
18	90430–09002	.JUNTA	2					
19	5PS–13761–00	.INYECTOR	2					
20	5PS–14996–00	.TUBO	2					
21	98507–06045	.TORNILLO DE CABEZA PLANA	2					
22	5PS–82509–01	.CABLE SUBCONDUCTOR	1					
23	1C7–82380–00	.SENSOR DE PRESION	1					
24	92507–06014	.TORNILLO CABEZA CONICA PLANA	2					
25	5PS–14349–01	.TUBO	1					
26	5PS–14987–00	.TUBO	2					
27	68V–24376–00	.TUBO DE UNION 1	2					

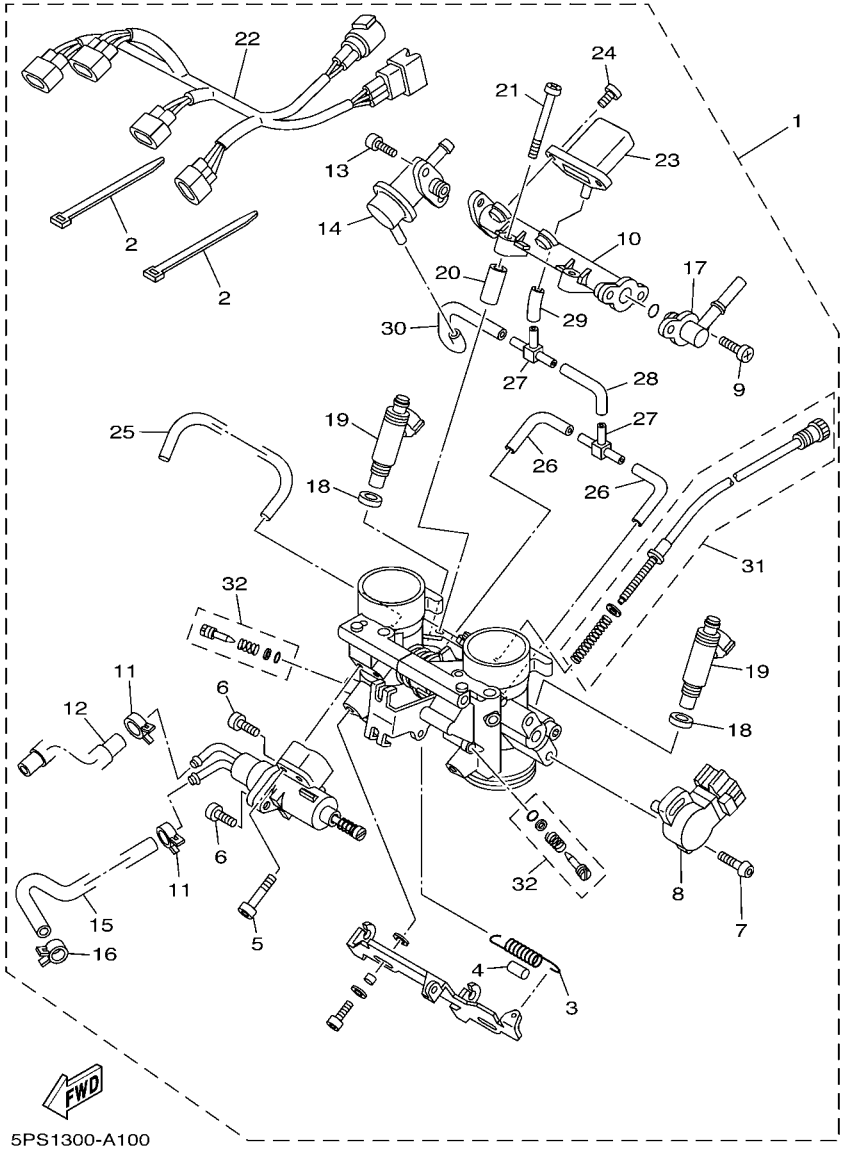

FIG. 10 ADMISION 2

REF. Nº	CODIGO Nº	DESCRIPCION	5PSK					OBSERVACIONES
28	5JW–24311–00	.TUBO DE COMBUSTIBLE 1	1					
29	5FL–14348–10	.MANGUERA	1					
30	5FL–14348–00	.MANGUERA	1					
31	5PS–14103–00	.CJTO. TORNILLO DEL RALENTI	1					
32	5JW–14104–00	.CJTO. TORNNILLO DE AIRE	1					

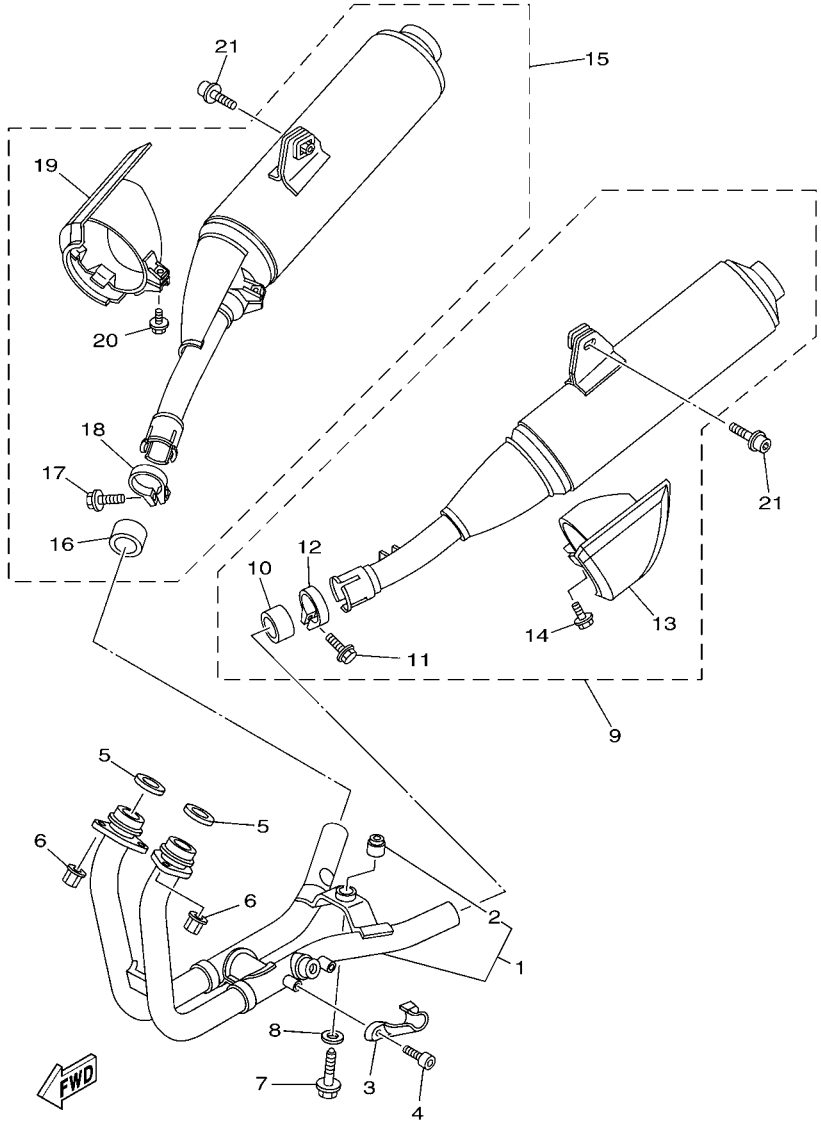

5PSD700-F110

FIG. 11 DESCARGA

REF. Nº	CODIGO Nº	DESCRIPCION	5PSK					OBSERVACIONES
1	5PS–14610–10	TUBO DE ESCAPE COMPLETO 1	1					
2	36Y–27414–00	.AMORTIGUADOR DE APOYAPIE	1					
3	5PS–14628–00	PROTECTOR DE TUBO DE ESCAPE	1					
4	91380–06010	PERNO	2					
5	3VD–14613–01	JUNTA, TUBO DE ESCAPE	2					
6	90179–08410	TUERCA	4					
7	90109–08170	PERNO	1					
8	90201–08753	ARANDELA PLANA	1					
9	2B0–14710–00	TUBO DE ESCAPE COMPLETO 1	1					
10	5PX–14755–00	.EMPAQUE DE SILENCIADOR	1					
11	95024–08025	.PERNO, BRIDA	1					
12	5PS–14715–00	.BANDA DE SILENCIADOR	1					
13	2B0–14738–00	.PROTECTOR DE SILENCIADOR 3	1					
14	95024–06012	.PERNO, BRIDA	1					
15	2B0–14720–00	TUBO DE ESCAPE COMPLETO 2	1					
16	5PX–14755–00	.EMPAQUE DE SILENCIADOR	1					
17	95024–08025	.PERNO, BRIDA	1					
18	5PS–14725–00	.BANDA DE SILENCIADOR	1					
19	2B0–14748–00	.PROTECTOR DE SILENCIADOR 4	1					
20	95024–06012	.PERNO, BRIDA	1					
21	90109–087F1	PERNO	2					

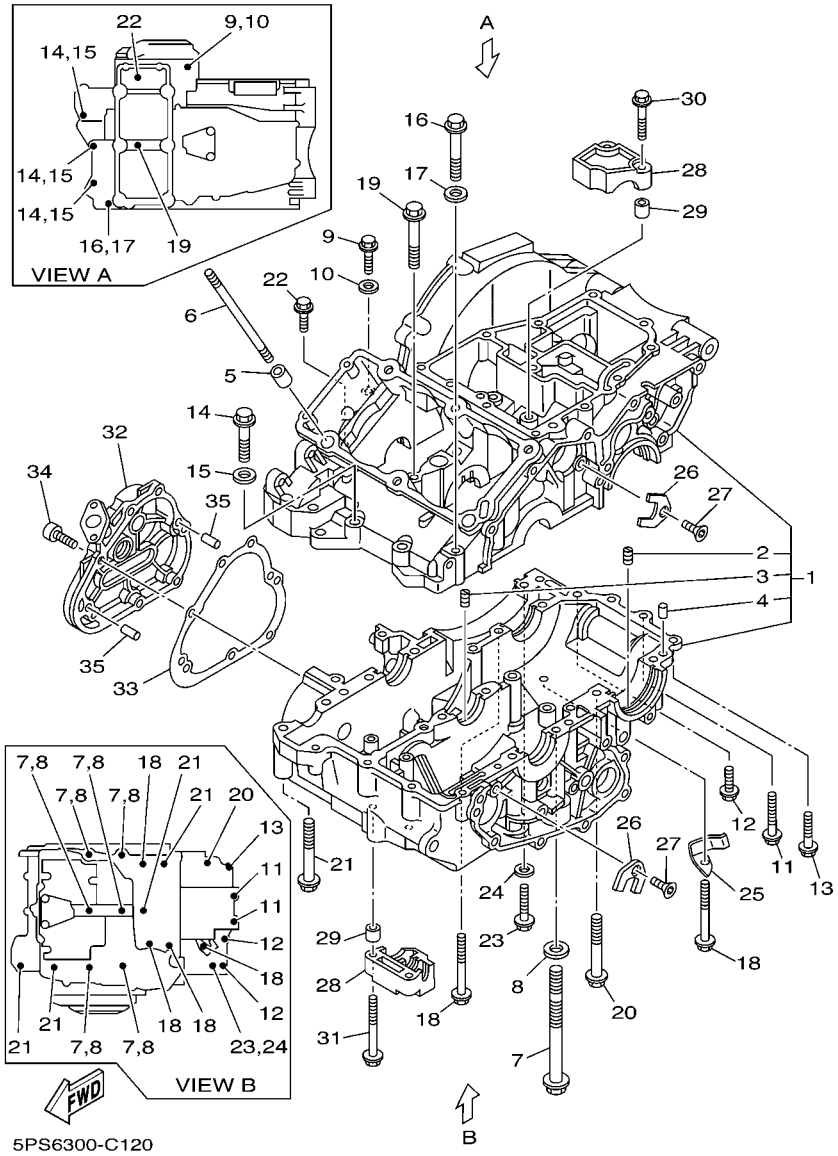

FIG. 12 CARTER

REF. Nº	CODIGO Nº	DESCRIPCION	5PSK					OBSERVACIONES
1	5PS–15100–10	CARTER COMPLETO	1					
2	4XV–15138–00	.BOQUILLA 1	1					
3	4G0–15138–00	.BOQUILLA 1	1					
4	99530–10114	.PASADOR, DE ESPIGA	1					
5	99530–14016	PASADOR, DE ESPIGA	2					
6	3LD–11361–00	PERNO RETEN DE CILINDRO 1	6					
7	90105–10560	TORNILLO	6					
8	90201–11597	ARANDELA PLANA	6					
9	95814–06040	TORNILLO	1					
10	90201–066F0	ARANDELA PLANA	1					
11	95817–06055	TORNILLO	2					
12	95817–06020	TORNILLO	2					
13	95817–06030	TORNILLO	1					
14	95814–08050	TORNILLO	3					
15	90201–08087	ARANDELA PLANA	3					
16	95814–08060	TORNILLO	1					
17	90201–08087	ARANDELA PLANA	1					
18	95817–06070	TORNILLO	4					
19	95817–08065	TORNILLO	1					
20	95814–08070	TORNILLO	1					
21	95817–08075	TORNILLO	4					
22	95817–06025	TORNILLO	1					
23	95814–06040	TORNILLO	1					
24	90201–066F0	ARANDELA PLANA	1					
25	90465–10028	BRIDA	1					
26	3LD–15191–00	PLACA	2					
27	90151–06008	TORNILLO EMBUTIDO	2					

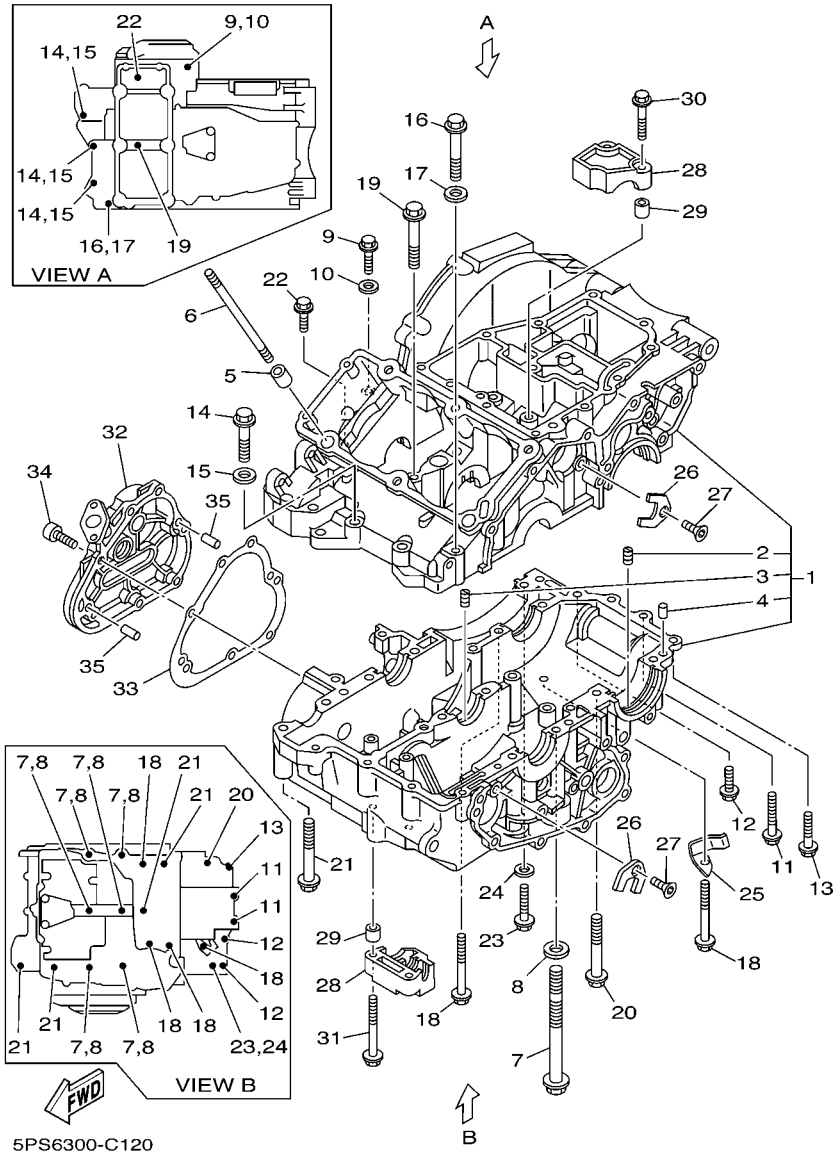

FIG. 12 CARTER

REF. Nº	CODIGO Nº	DESCRIPCION	5PSK					OBSERVACIONES
28	3LD–15118–00	SOPORTE	2					
29	99530–08016	PASADOR, DE ESPIGA	4					
30	95817–06045	TORNILLO	2					
31	95817–06070	TORNILLO	2					
32	5PS–15416–10	CUBIERTA DE BOMBA DE ACEITE	1					
33	5PS–15456–02	EMPAQ CUBTA.BOMBA ACEITE 1	1					
34	91314–06020	TORNILLO ALLEN	7					
35	99530–08012	PASADOR, DE ESPIGA	2					

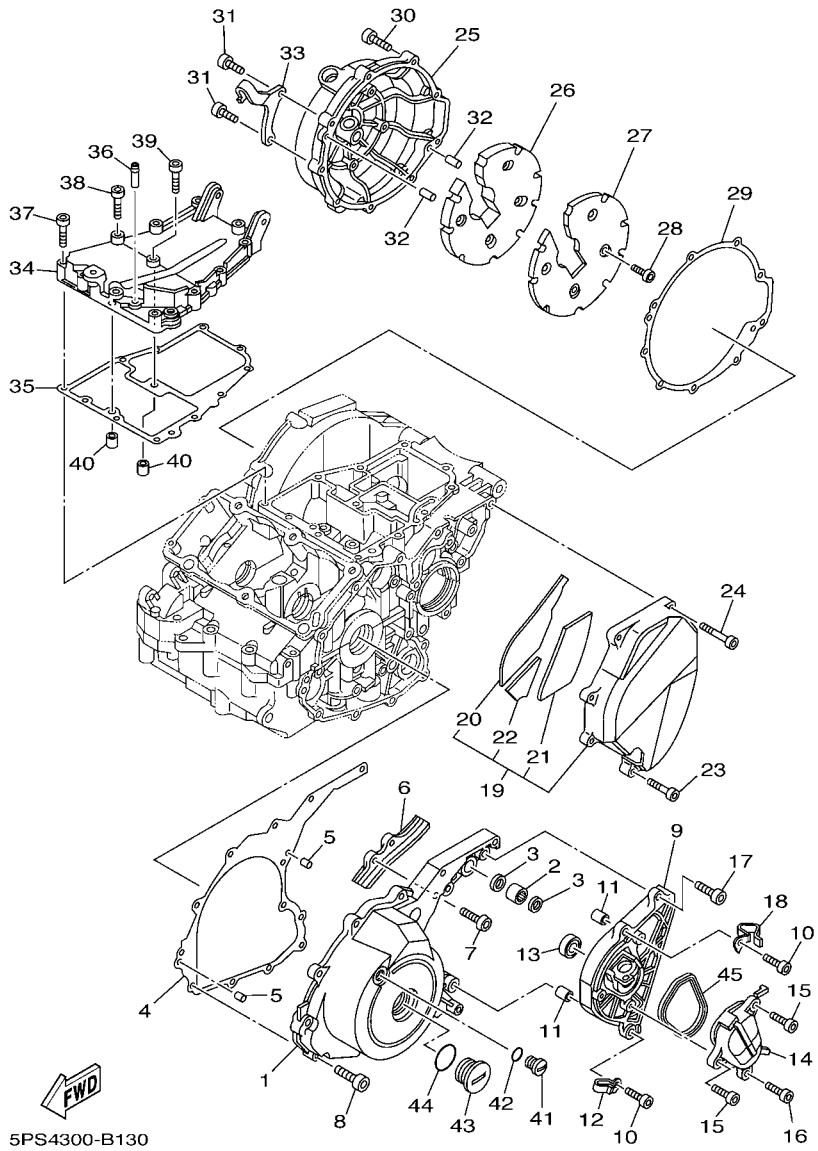

FIG. 13 CUBIERTA DE CARTER 1

REF. Nº	CODIGO Nº	DESCRIPCION	5PSK					OBSERVACIONES
1	5PS–15411–10	CUBIERTA DE CARTER 1	1					
2	93317–21288	COJINETE	1					
3	93109–12075	SELLO ACEITE	2					
4	5PS–15451–02	EMPAQ DE CUBIERTA DE CARTER	1					
5	99530–08012	PASADOR, DE ESPIGA	2					
6	5PS–17653–00	CORREDERA	1					
7	90109–065A8	PERNO	2					
8	91314–06025	TORNILLO ALLEN	9					
9	5PS–1541E–00	APOYO	1					
10	91317–06030	PERNO	2					
11	99530–10114	PASADOR, DE ESPIGA	2					
12	90465–08125	BRIDA	1					
13	93106–15034	SELLO ACEITE	1					
14	5PS–15419–00	CUBIERTA DE SELECCIONADOR	1					
15	91317–06014	PERNO	2					
16	91317–06010	PERNO	1					
17	91317–06020	PERNO	1					
18	90465–08034	BRIDA	1					
19	5PS–15420–10	TAPA DE CARTER LATERAL	1					
20	5PS–15326–00	.AMORTIGUADOR 2	1					
21	5PS–15335–00	.AMORTIGUADOR 3	1					
22	5PS–15337–00	.COLLAR	1					
23	91314–06025	TORNILLO ALLEN	1					
24	91314–06050	TORNILLO ALLEN	4					
25	5PS–15431–10	CUBIERTA DE CARTER 3	1					
26	5PS–15316–00	AMORTIGUADOR 1	1					
27	5PS–15427–00	CUBIERTA DE TAPA 2	1					

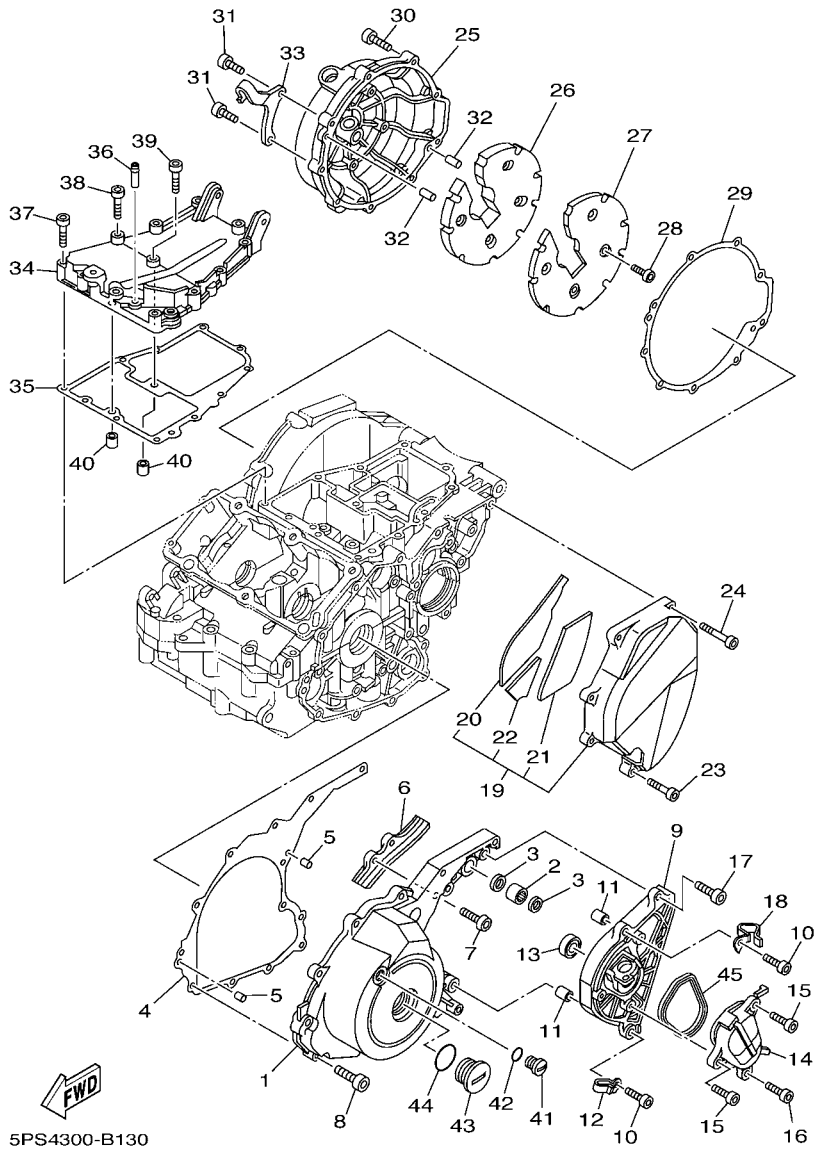

FIG. 13 CUBIERTA DE CARTER 1

REF. Nº	CODIGO Nº	DESCRIPCION	5PSK					OBSERVACIONES
28	90149–05009	TORNILLO DE REGLAJE	4					
29	5PS–15462–02	EMPAQ CUBIERTA DE CARTER 3	1					
30	91314–06025	TORNILLO ALLEN	7					
31	91314–06030	TORNILLO ALLEN	2					
32	99530–08012	PASADOR, DE ESPIGA	2					
33	5PS–15441–00	SOSTEN DE CABLE DE EMBRAGUE	1					
34	5PS–15425–10	CUBIERTA DE GENERADOR 2	1					
35	5PS–15463–02	EMPAQ CUBIERTA DEL CARTER 2	1					
36	583–11126–00	TUBO RESPIRADERO 3	1					
37	91380–06035	PERNO	10					
38	90110–06006	TORNILLO ALLEN	1					
39	91317–06045	PERNO	1					
40	99530–10114	PASADOR, DE ESPIGA	2					
41	90340–14013	TORNILLO, DE DRENAJE	1					
42	93210–14369	ANILLO O	1					
43	90340–32004	TORNILLO, DE DRENAJE	1					
44	93210–32172	ANILLO O	1					
45	5PS–8338L–00	EMPAQUE	1					

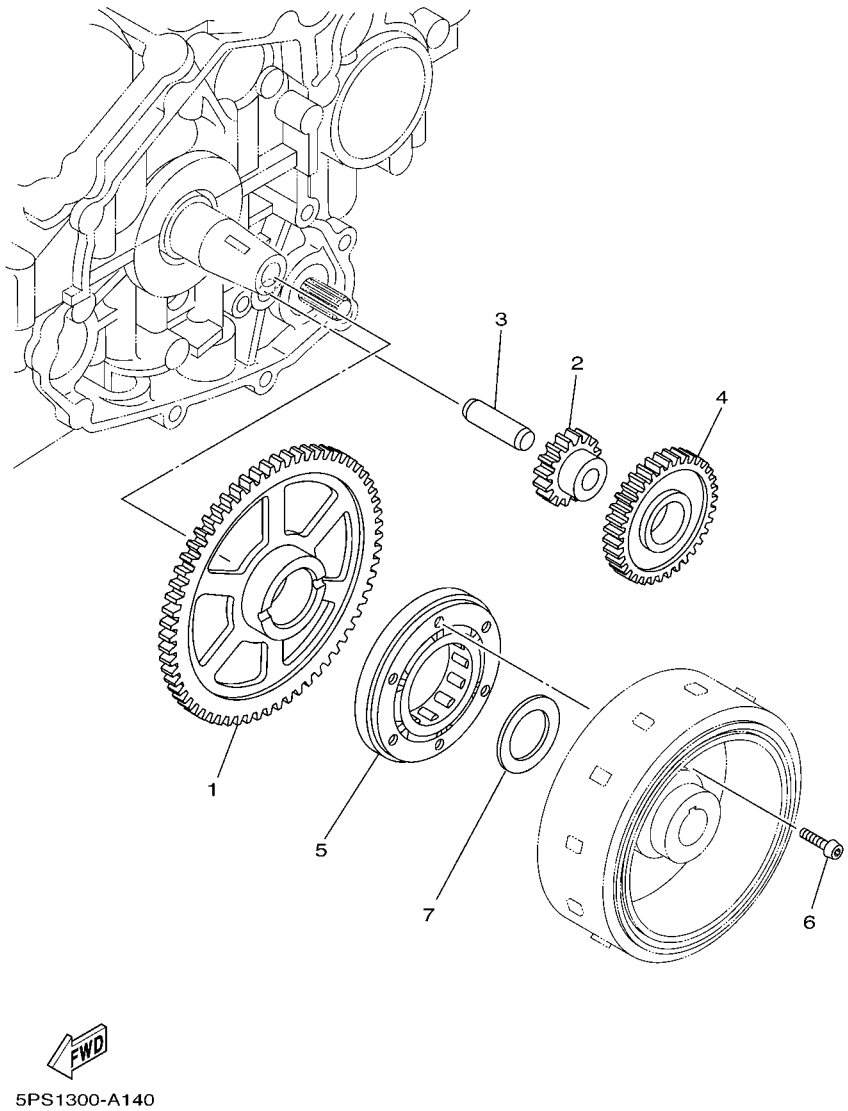

FIG. 14 EMBRAGUE DEL ARRANQUE

REF. Nº	CODIGO Nº	DESCRIPCION	5PSK					OBSERVACIONES
1	5PS–15515–00	ENGRANAJE 3	1					
2	3LD–15517–00	ENGRENAJE POSICION 2DA	1					
3	26H–15521–00	EJE 1	1					
4	3LD–15512–00	ENGRENAJE NEUTRO	1					
5	3LD–15590–02	ENSAMBLE GUIA CADENA ARRANQUE	1					
6	90149–06160	TORNILLO DE REGLAJE	3					
7	90201–30008	ARANDELA PLANA	1					

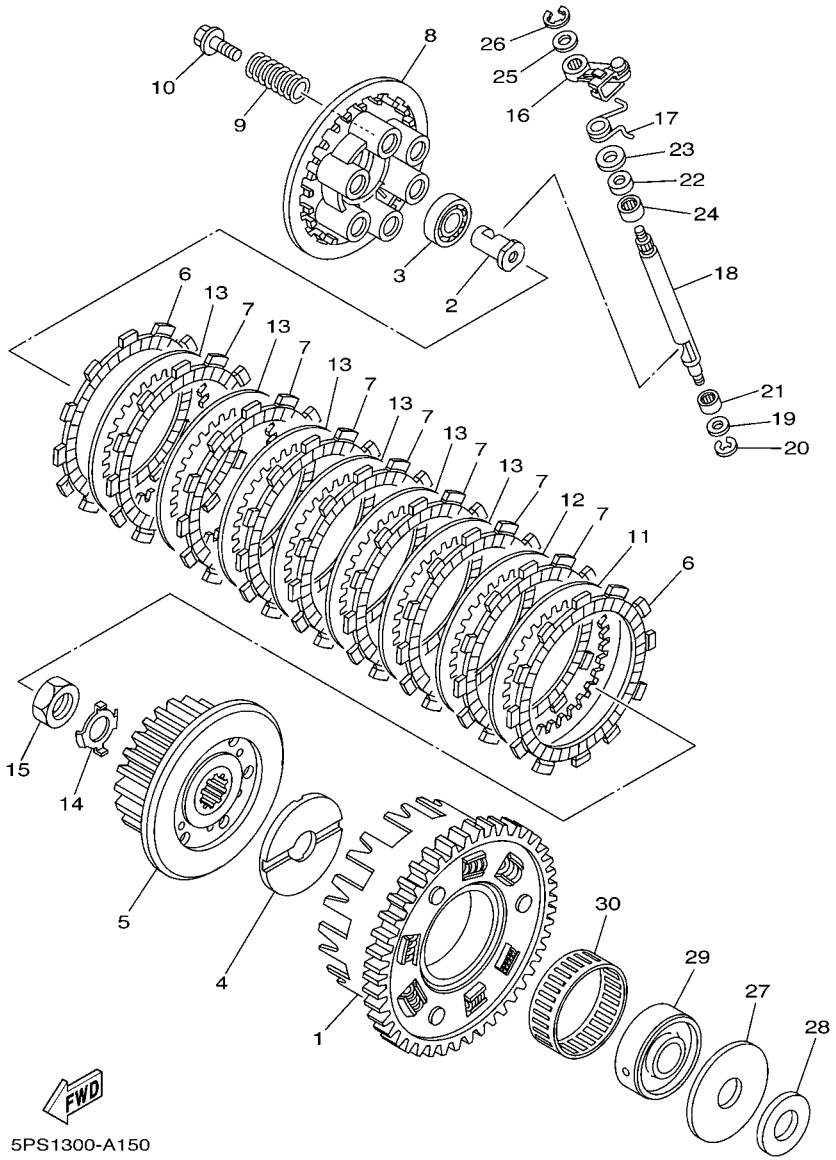

FIG. 15 EMBRAGUE

REF. Nº	CODIGO Nº	DESCRIPCION	5PSK					OBSERVACIONES
1	4TX–16150–02	CAMPANA DE EMBRAGUE	1					
2	5PS–16356–00	VARILLA DE EMPUJE 1	1					
3	93306–00304	COJINETE	1					
4	4H7–16154–00	ARANDELA, DE EMPUJE 1	1					
5	4TX–16371–00	CUBO, DE EMBRAGUE	1					
6	4H7–16321–02	PLACA DE FRICCION	2					
7	4TX–16321–00	PLACA DE FRICCION	7					
8	5EB–16351–01	PLATO DE PRESION	1					
9	90501–230E4	RESORTE DE COMPRESION	6					
10	90159–06123	TORNILLO CON VALONA	6					
11	3J2–16324–00	DISCO, DE EMBRAGUE (T=2.0)	1					UR
	168–16325–00	DISCO, DE EMBRAGUE (T=1.6)	1					UR
	168–16324–00	DISCO, DE EMBRAGUE (T=2.3)	1					UR
12	3J2–16324–00	DISCO, DE EMBRAGUE (T=2.0)	1					UR
	168–16324–00	DISCO, DE EMBRAGUE (T=2.3)	1					UR
13	3J2–16324–00	DISCO, DE EMBRAGUE (T=2.0)	6					
14	90215–20004	ARANDELA DE CIERRE	1					
15	90170–20008	TUERCA	1					
16	5PS–16340–00	PALANCA DE EMPUJE COMPLETA	1					
17	90508–14012	RESORTE DE TORSION	1					
18	5PS–16382–00	EJE DE PALANCA DE EMPUJE	1					
19	92907–08600	ARANDELA	1					
20	99001–07600	PRESILLA REDONDA	1					
21	93317–11096	COJINETE	1					
22	93102–12106	SELLO ACEITE (SD 12-22-5 HS)	1					
23	90201–12163	ARANDELA PLANA	1					
24	93317–11287	COJINETE	1					

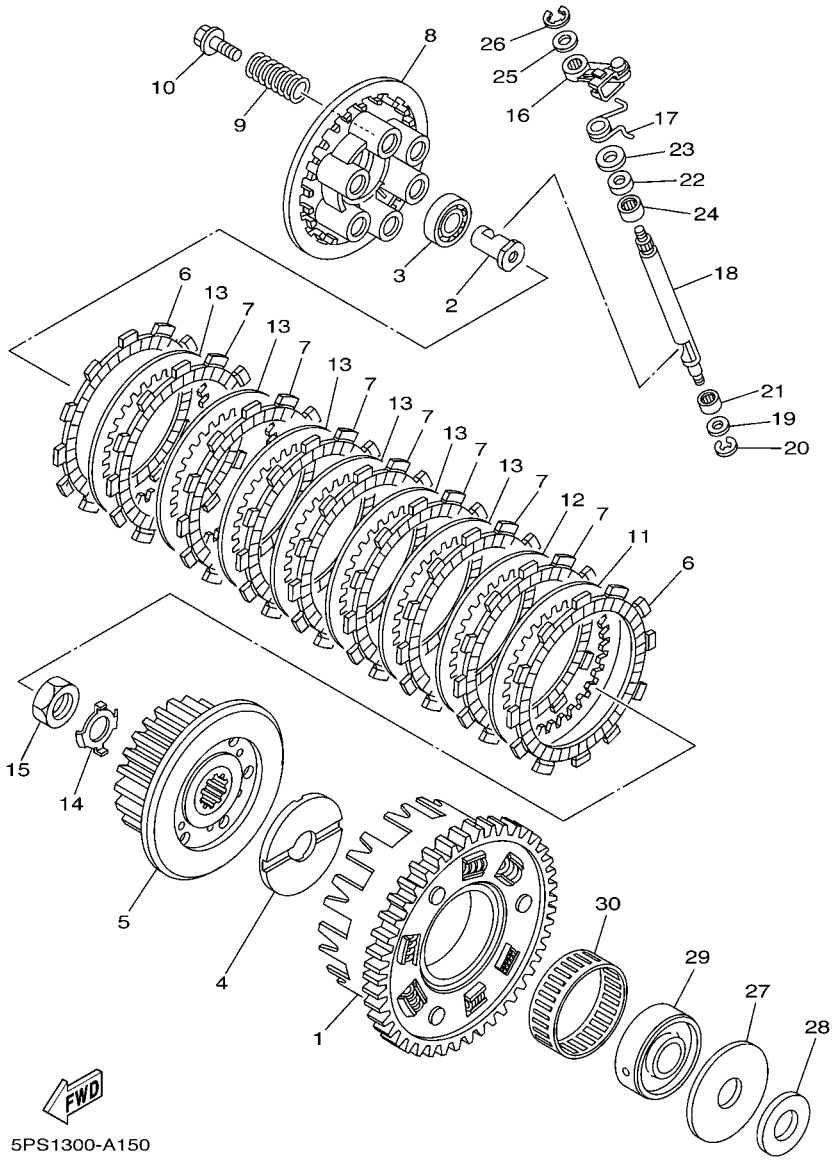

FIG. 15 EMBRAGUE

REF. Nº	CODIGO Nº	DESCRIPCION	5PSK					OBSERVACIONES
25	90201–10119	ARANDELA PLANA	1					
26	99009–10400	PRESILLA REDONDA	1					
27	3VD–16164–00	PLACA DE EMPUJE 2	1					
28	3VD–16154–00	ARANDELA, DE EMPUJE 1	1					
29	4NX–16181–00	SEPARADOR	1					
30	93310–365B8	COJINETE DE RODILLOS	1					

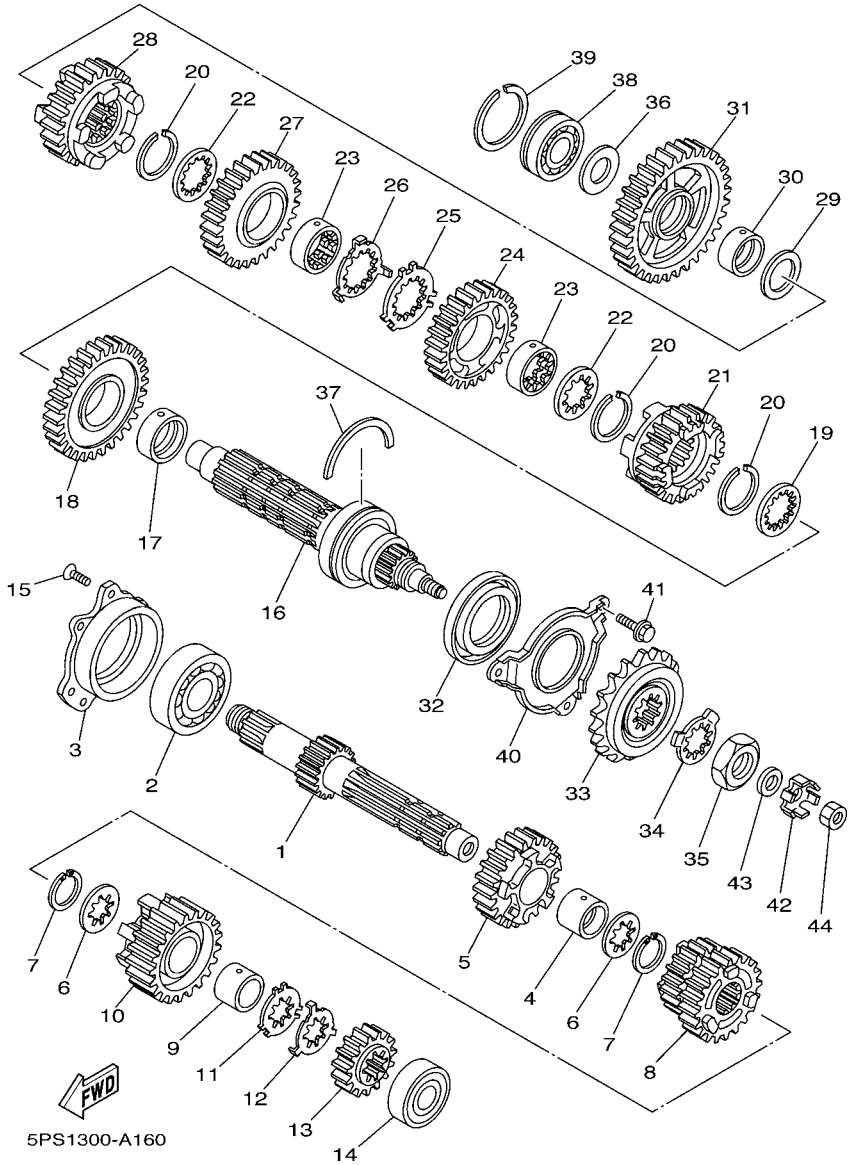

FIG. 16 TRANSMISION

REF. Nº	CODIGO Nº	DESCRIPCION	5PSK					OBSERVACIONES
1	5PS–17401–00	EJE PRINCIPAL COMPLETO (12T)	1					
2	93306–30534	COJINETE	1					
3	5PS–15163–00	CAJA DE COJINETE 1	1					
4	90387–25004	ESPACIADOR	1					
5	5PS–17151–00	ENGRANAJE, PINION DE 5TA(25T)	1					
6	90209–21332	ARANDELA DE SEPARACION	2					
7	93440–25084	SEGURO	2					
8	5PS–17131–00	ENGRANAJE PINON 3/4 (22T/25T)	1					
9	90387–2513E	ESPACIADOR	1					
10	5PS–17161–00	ENGRANAJE PINON 6TA (26T)	1					
11	90209–22352	ARANDELA DE SEPARACION	1					
12	90209–21351	ARANDELA DE SEPARACION	1					
13	5PS–17121–00	ENGRANAJE, PINION DE 2DA (13T)	1					
14	93306–20464	COJINETE	1					
15	90151–06011	TORNILLO EMBUTIDO	3					
16	5PS–17402–00	EJE DE TRACCION COMPLETO	1					
17	90387–32003	ESPACIADOR	1					
18	5PS–17221–00	ENGRANAJE RUEDA DE 2DA (37T)	1					
19	90209–28331	ARANDELA DE SEPARACION	1					
20	93440–31183	SEGURO	3					
21	5PS–17261–00	ENGRANAJE RUEDA DE 6TA (24T)	1					
22	90209–28331	ARANDELA DE SEPARACION	2					
23	90387–2802W	ESPACIADOR	2					
24	5PS–17241–00	ENGRANAJE DE RUEDA 4TA (31T)	1					
25	90209–29329	ARANDELA DE SEPARACION	1					
26	90209–28330	ARANDELA DE SEPARACION	1					
27	5PS–17231–00	ENGRANAJE, RUEDA DE 3RA (34T)	1					

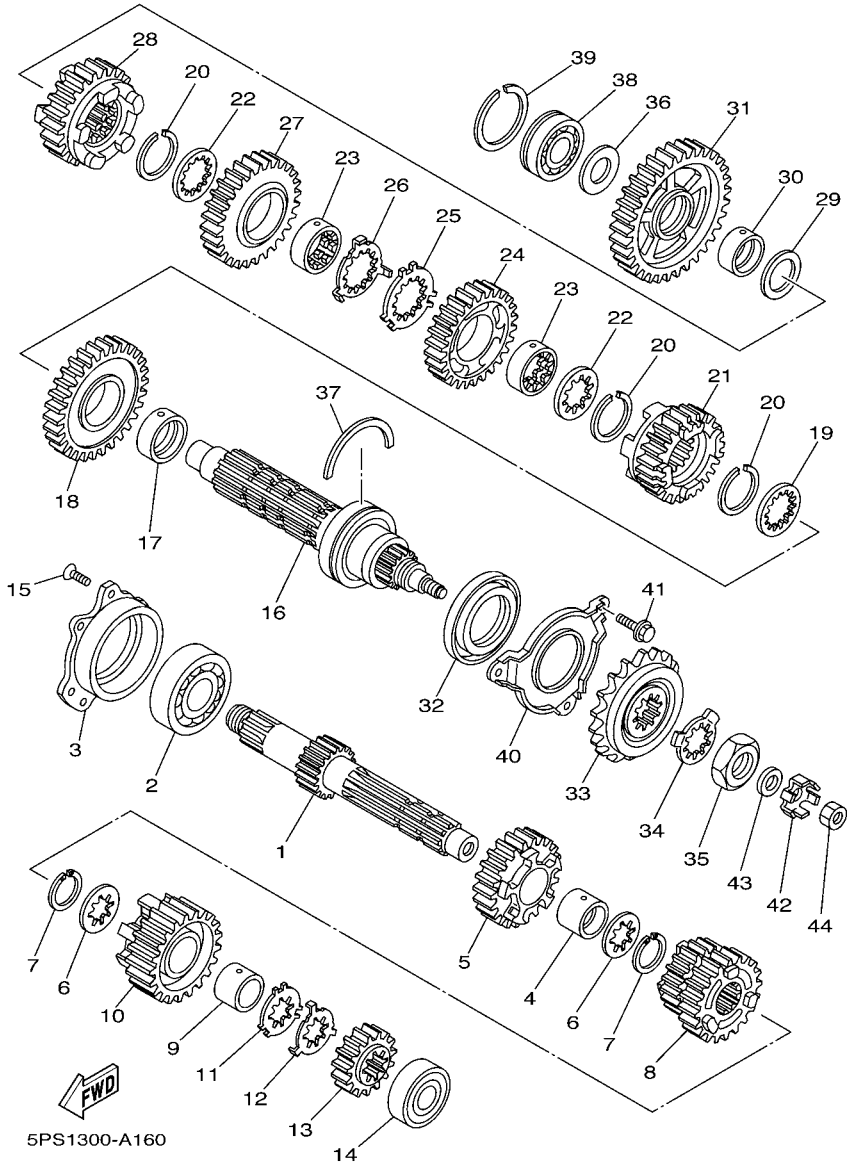

FIG. 16 TRANSMISION

REF. Nº	CODIGO Nº	DESCRIPCION	5PSK					OBSERVACIONES
28	5PS–17251–00	ENGRANAJE, RUEDA DE 5TA (26T)	1					
29	90201–25M72	ARANDELA PLANA	1					
30	90387–2511A	ESPACIADOR	1					
31	5PS–17211–00	ENGRANAJE RUEDA DE 1 RA (33T)	1					
32	93102–40008	SELLO ACEITE	1					
33	5PS–17460–00	CORONA (16T)	1					
34	90215–30233	ARANDELA DE CIERRE	1					
35	90179–22011	TUERCA	1					
36	90201–20008	ARANDELA PLANA	1					
37	278–17424–01	PRESILLA REDONDA 1	1					
38	93306–20455	COJINETE	1					
39	93440–45144	SEGURO	1					
40	5PS–17471–00	PLACA, DE CUBIERTA	1					
41	95827–06012	TORNILLO	3					
42	5PS–17446–00	PLACA	1					
43	90201–10N12	ARANDELA PLANA	1					
44	95307–10700	TUERCA	1					

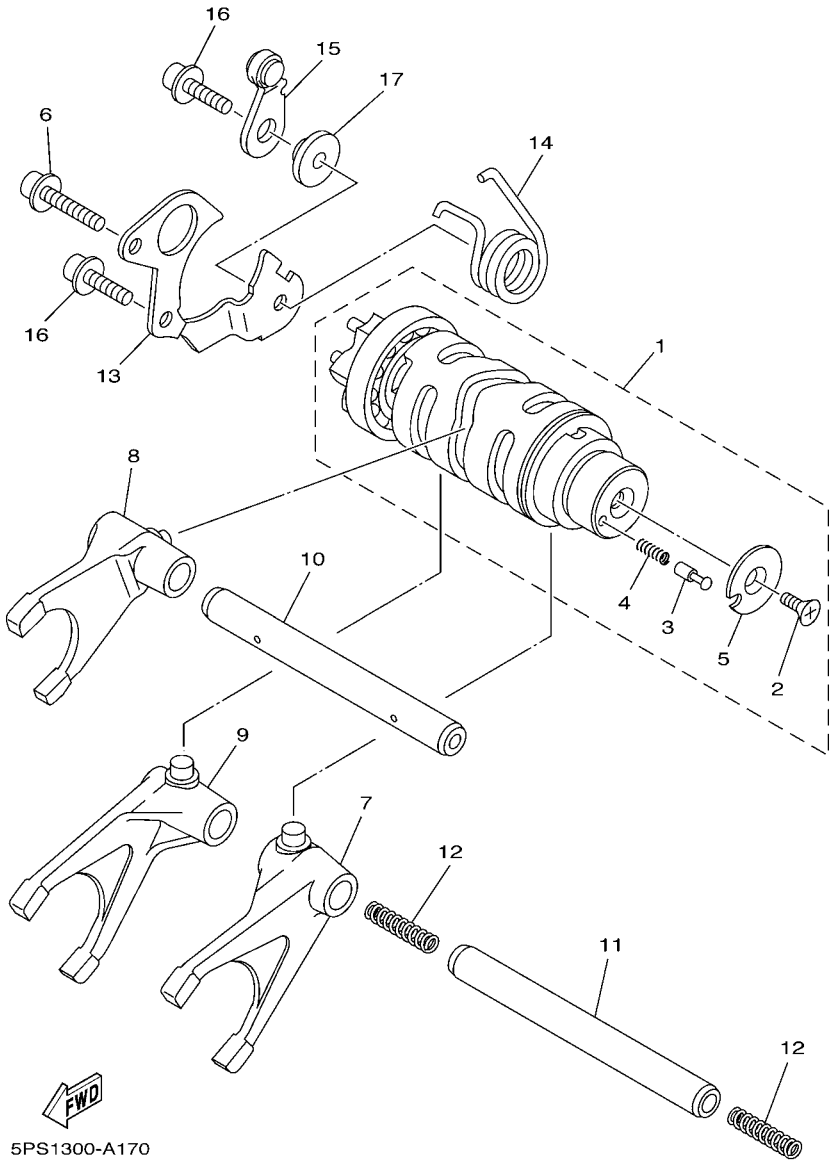

FIG. 17 LEVA DE CAMBIO & HORQUILLA

REF. Nº	CODIGO Nº	DESCRIPCION	5PSK					OBSERVACIONES
1	5PS–18540–00	LEVA DEL CAMBIO COMPLETA	1					
2	90149–05321	.TORNILLO DE REGLAJE	1					
3	4UN–18542–00	.PUNTO MUERTO	1					
4	90501–06022	.RESORTE DE COMPRESION	1					
5	4UN–18566–00	.PLACA LATERAL 2	1					
6	90110–06060	TORNILLO ALLEN	1					
7	5PS–18511–00	HORQUILLA DEL CAMBIO 1	1					
8	5PS–18512–00	HORQUILLA DEL CAMBIO 2	1					
9	5PS–18513–00	HORQUILLA DEL CAMBIO 3	1					
10	5PS–18531–00	BARRA GUIA HORQ. CAMBIO 1	1					
11	4XV–18531–00	BARRA GUIA HORQ. CAMBIO 1	1					
12	90501–064L1	RESORTE DE COMPRESION	2					
13	3LD–18536–00	TOPE DE PALANCA SELECTOR	1					
14	90508–29016	RESORTE DE TORSION	1					
15	4SV–18140–00	PALANCA DE TOPE COMPLETA	1					
16	90110–06027	TORNILLO ALLEN	2					
17	4NX–18175–00	ESPACIADOR	1					

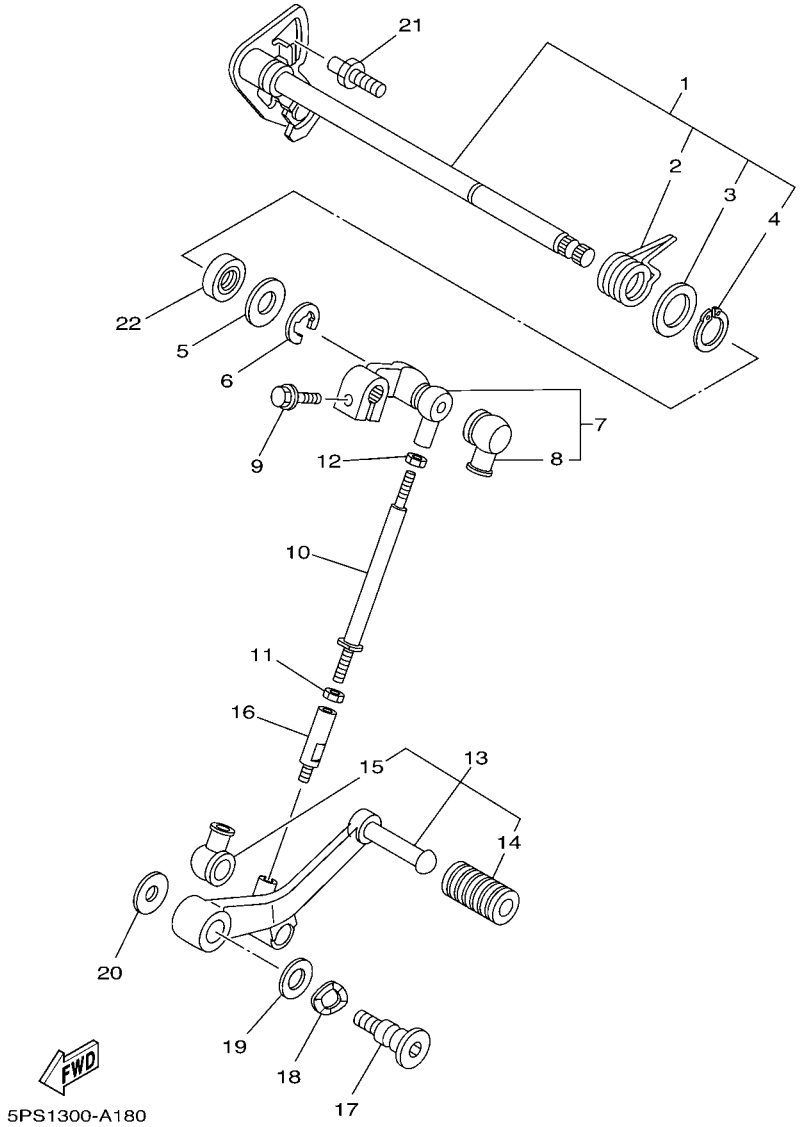

FIG. 18 EJE DE CAMBIO & PEDAL

REF. Nº	CODIGO Nº	DESCRIPCION	5PSK					OBSERVACIONES
1	5PS–18101–00	EJE SELECTOR COMPLETO	1					
2	90508–32682	.RESORTE DE TORSION	1					
3	90201–191J4	.ARANDELA PLANA	1					
4	99009–19400	.PRESILLA REDONDA	1					
5	90201–12575	ARANDELA PLANA	1					
6	99001–10600	PRESILLA REDONDA	1					
7	5PS–18130–00	EJE DE CAMBIO COMPLETO	1					
8	2H9–18154–00	.CUBIERTA GUARDAPOLVO	1					
9	95827–06020	TORNILLO	1					
10	2H9–18115–00	VARILLA DEL CAMBIO	1					
11	90170–06228	TUERCA	1					
12	95304–06700	TUERCA	1					
13	5PS–18110–00	PEDAL DE CAMBIO COMPLETO	1					
14	5EB–18113–00	.FUNDA DEL PEDAL DEL CAMBIO	1					
15	2H9–18154–00	.CUBIERTA GUARDAPOLVO	1					
16	5PS–18116–00	VARILLA DE CONECTOR 1	1					
17	5JW–27434–00	PERNO	1					
18	90206–12074	ARANDELA ONDULADA	1					
19	90201–12013	ARANDELA PLANA	1					
20	90201–080H1	ARANDELA PLANA	1					
21	1D7–18127–00	PASADOR DE PALANCA	1					
22	93101–12004	SELLO ACEITE	1					

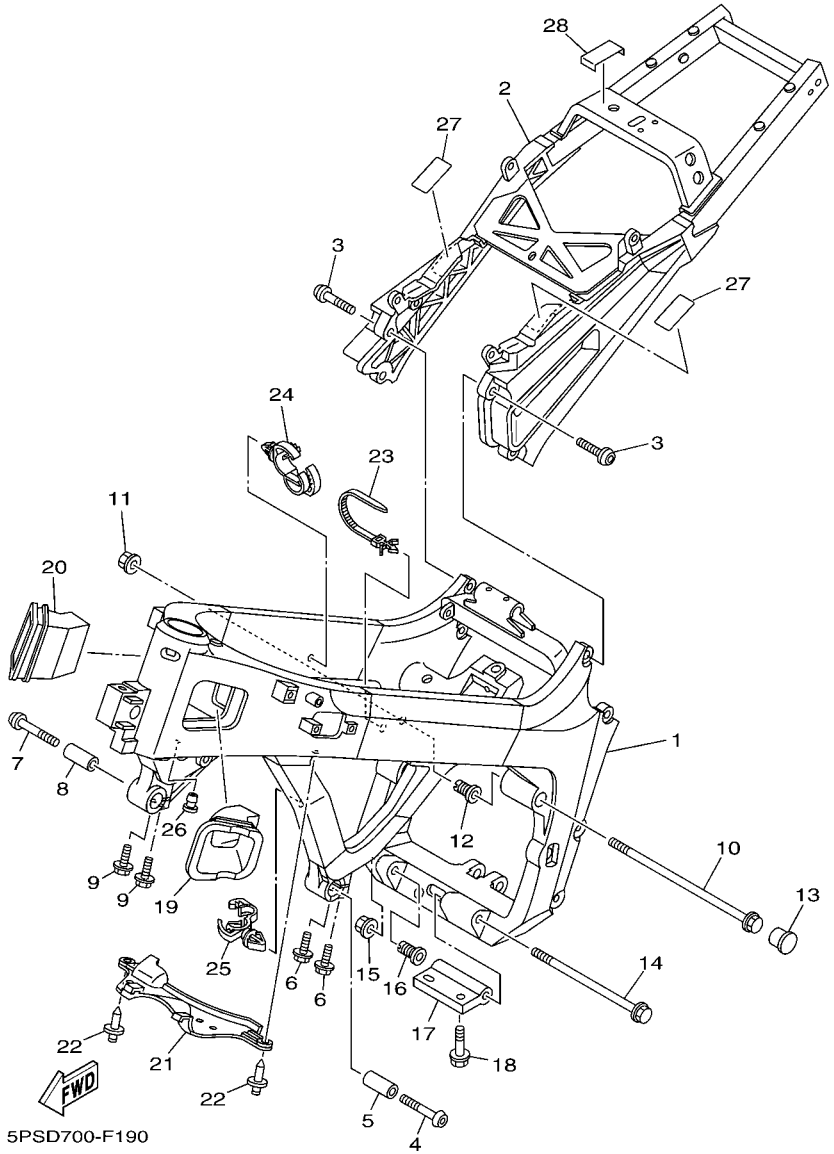

FIG. 19 CUADRO

REF. Nº	CODIGO Nº	DESCRIPCION	5PSK					OBSERVACIONES
1	5PS–21110–20	ARMAZON COMPLETO	1					
2	5PS–21190–11	CUADRO TRASERO COMPLETA	1					
3	90149–10002	TORNILLO DE REGLAJE	4					
4	90111–12001	TORNILLO	1					
5	90387–14003	ESPACIADOR	1					
6	90105–08047	TORNILLO	2					
7	90111–12001	TORNILLO	1					
8	90387–14003	ESPACIADOR	1					
9	90105–08047	TORNILLO	2					
10	90105–10032	TORNILLO	1					
11	90179–10002	TUERCA	1					
12	4C8–21495–00	PERNO DE AJUSTE	1					
13	90338–24112	TAPON	1					
14	90105–10113	TORNILLO	1					
15	90179–10696	TUERCA	1					
16	4C8–21495–00	PERNO DE AJUSTE	1					
17	5PS–21489–00	SOPORTE INFERIOR DE MOTOR	1					
18	95817–08030	TORNILLO	2					
19	5PS–2117V–00	CUBIERTA 7	1					
20	5PS–2117W–00	CUBIERTA 8	1					
21	5PS–2117M–00	CUBIERTA	1					
22	90269–07001	REMACHE	2					
23	90464–12089	BRIDA	1					
24	90464–20181	BRIDA	1					
25	90464–13249	BRIDA	1					
26	90338–08008	TAPON	1					
27	1JK–21268–00	SELLO	2					

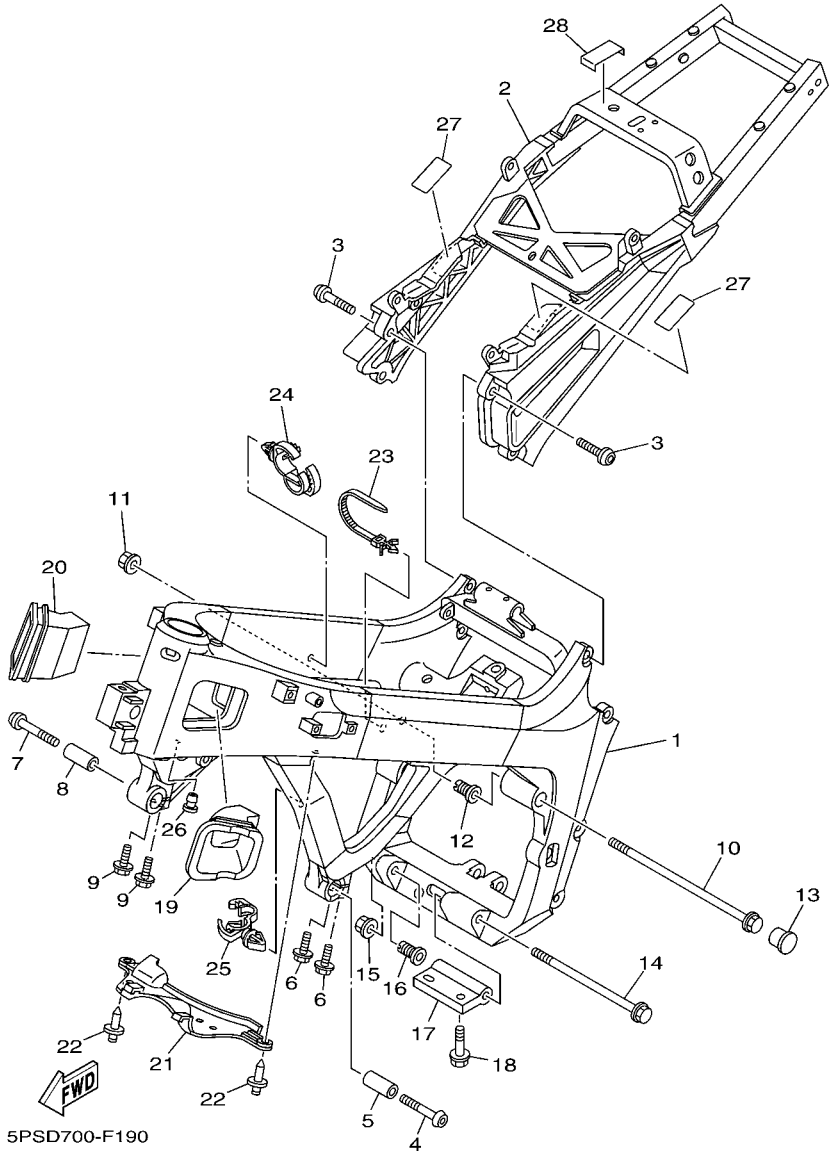

FIG. 19 CUADRO

REF. Nº	CODIGO Nº	DESCRIPCION	5PSK					OBSERVACIONES
28	1B3–2117G–00	PROTECTOR	2					

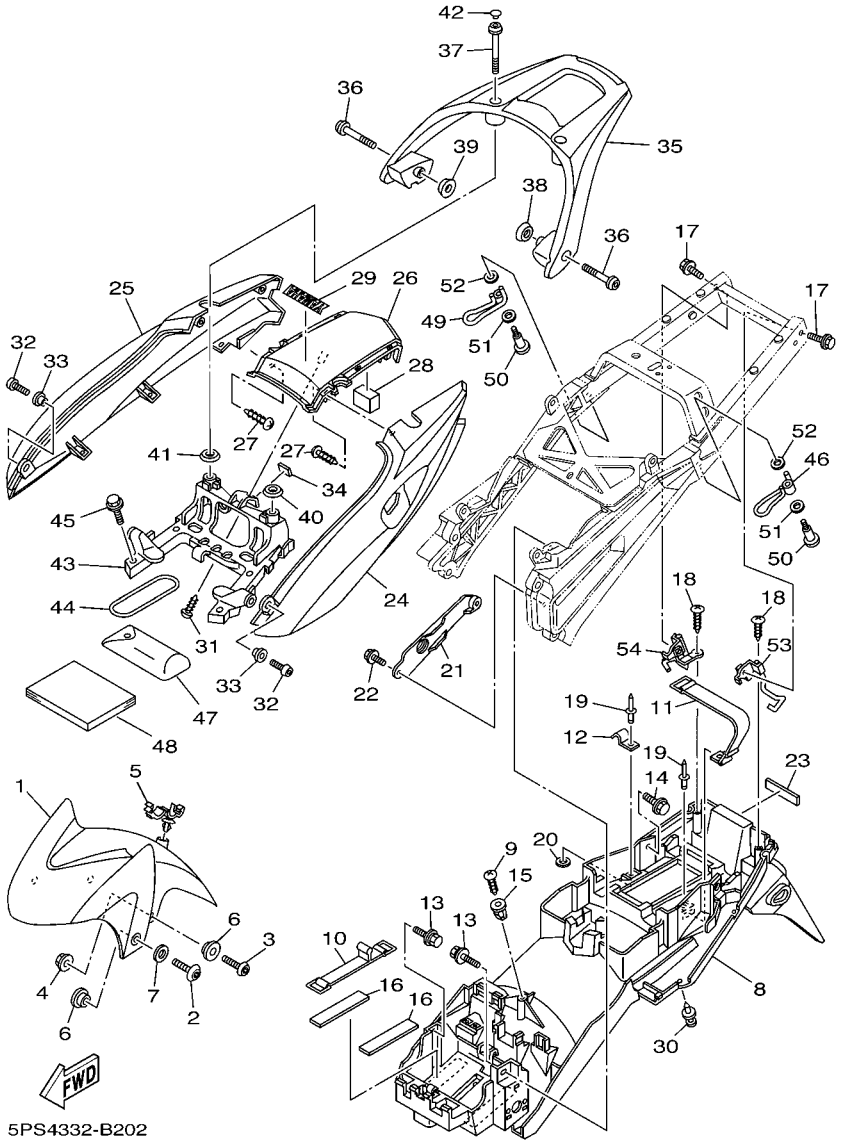

FIG. 20 GUARDABARRO

REF. Nº	CODIGO Nº	DESCRIPCION	5PSK					OBSERVACIONES
1	5PS–21511–00–P6	GUARDABARRO DELANTERO	1					UR PARA SMX
	5PS–21511–00–PA	GUARDABARRO DELANTERO	1					UR MNM1 PARA MDS
2	90110–06200	TORNILLO ALLEN	2					
3	92014–06020	PERNO	2					
4	90179–06009	TUERCA	2					
5	90464–18002	BRIDA	1					
6	90387–065T2	ESPACIADOR	4					
7	90202–06170	ARANDELA DE PLANA	2					
8	5PS–21611–00	GUARDABARRO TRASERO	1					
9	97707–60020	TORNILLO ROSCA HEMBRA	1					
10	3VD–82131–00	TIRANTE DE BATERIA	1					
11	5JW–21647–01	BANDA	1					
12	5PS–2162A–00	GANCHO	1					
13	90119–06108	TORNILLO CON ARANDELA	2					
14	90119–06118	TORNILLO CON ARANDELA	2					
15	90338–08226	TAPON	1					
16	1AE–2834E–00	AMORTIGUADOR 1	2					
17	90105–06020	TORNILLO	2					
18	97707–50020	TORNILLO ROSCA HEMBRA	2					
19	90267–40110	REMACHE CIEGO	2					
20	90201–04018	ARANDELA PLANA	1					
21	5PS–2163A–00	CUBIERTA TRAS GUARDABARRO 1	1					
22	90119–05062	TORNILLO CON ARANDELA	2					
23	5PS–21639–00	AMORTIGUADOR 2	1					
24	5PS–2471K–00–P6	CUBIERTA, DE COLA 1	1					UR PARA SMX
	5PS–2471K–00–7M	CUBIERTA, DE COLA 1	1					UR PARA MDS
25	5PS–2472K–00–P6	CUBIERTA, DE COLA 2	1					UR PARA SMX

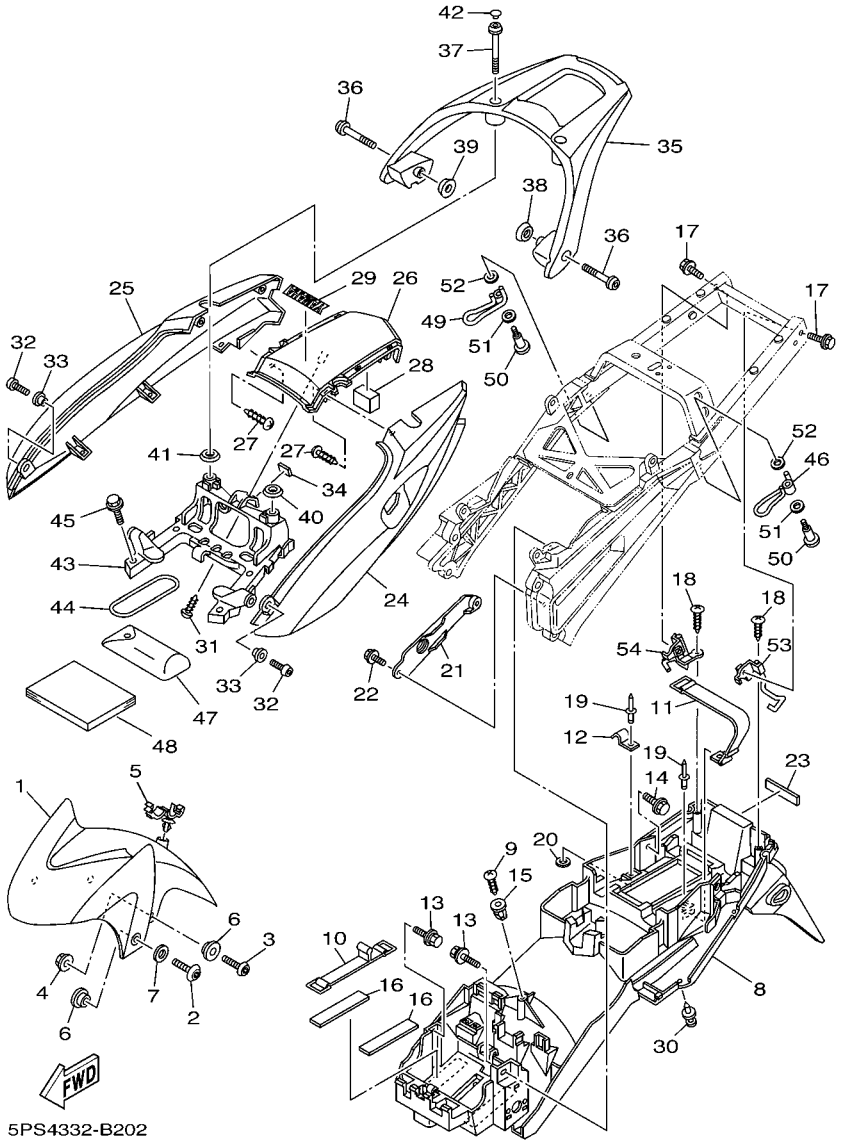

FIG. 20 GUARDABARRO

REF. Nº	CODIGO Nº	DESCRIPCION	5PSK					OBSERVACIONES
25	5PS–2472K–00–7M	CUBIERTA, DE COLA 2	1					UR PARA MDS
26	5PS–21651–00–P6	TAPA DE GUARDABARRO TRAS.	1					UR PARA SMX
	5PS–21651–00–7M	TAPA DE GUARDABARRO TRAS.	1					UR PARA MDS
27	97707–50012	TORNILLO	4					
28	5PS–21649–00	AMORTIGUADOR	1					
29	99247–00080	EMBLEMA, YAMAHA	1					
30	90269–06081	REMACHE	6					
31	97707–50014	TORNILLO	1					
32	92017–06014	PERNO	2					
33	90387–06048	ESPACIADOR	2					
34	51Y–21639–00	AMORTIGUADOR 2	1					
35	5PS–24773–10	MANIJA DE ASIENTO	1					
36	90111–08005	TORNILLO	2					
37	90111–08006	TORNILLO	2					
38	5PS–24723–00	AMORTIGUADOR DE ASIENTO	1					
39	5PS–24724–00	AMORTIGUADOR DE ASIENTO	1					
40	5PS–24723–10	AMORTIGUADOR DE ASIENTO	1					
41	5PS–24724–10	AMORTIGUADOR DE ASIENTO	1					
42	90338–08163	TAPON	2					
43	5PS–2117E–00	SOPORTE DE LANTERNA TRAZERA	1					
44	4XV–21376–00	BANDA DE HERRAMIENTA	1					
45	95827–08035	TORNILLO	4					
46	5PS–21654–00	CABLE	1					
47	5PS–28100–01	JUEGO DE HERRAMIENTAS	1					
48	2B0–28199–S5	MANUAL DEL PROPRIETARIO	1					
49	5PS–21654–10	CABLE	1					
50	90109–06046	PERNO	2					

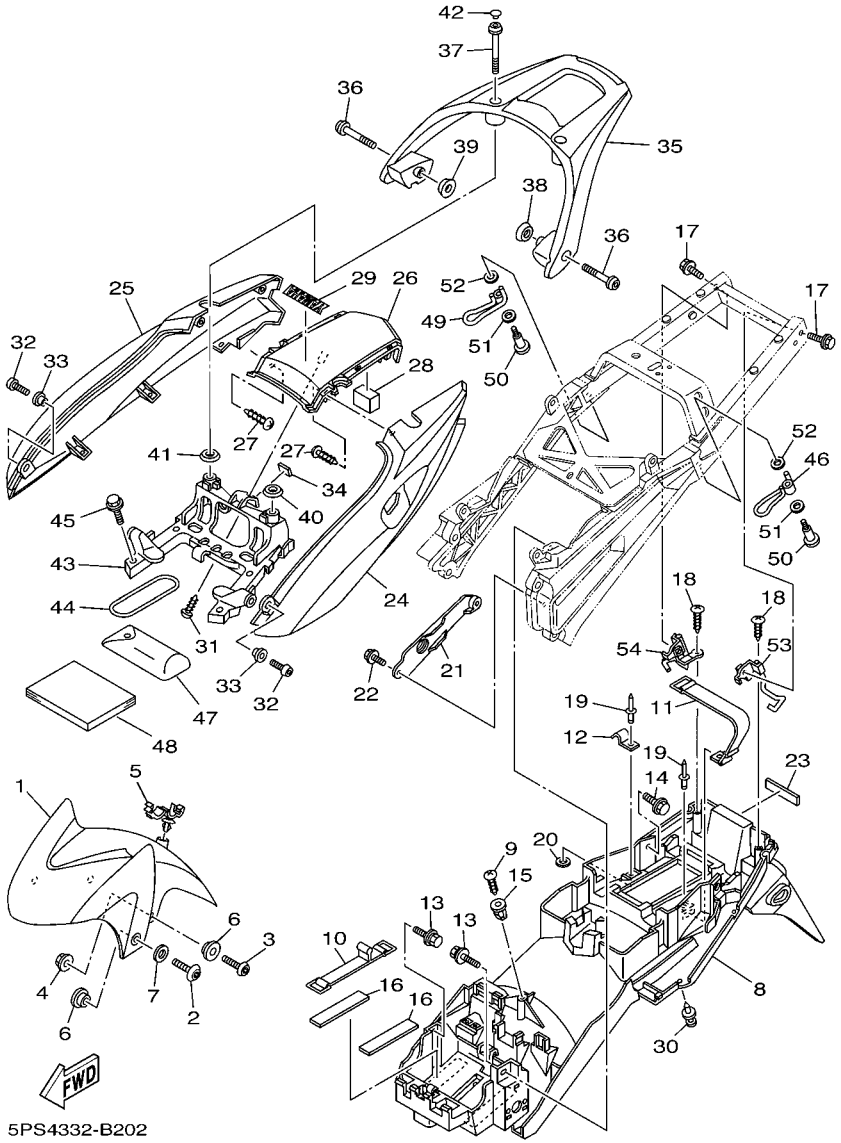

FIG. 20 GUARDABARRO

REF. Nº	CODIGO Nº	DESCRIPCION	5PSK					OBSERVACIONES
51	90206–08051	ARANDELA ONDULADA	2					
52	90201–06043	ARANDELA PLANA	2					
53	5PS–2132F–00	GANCHO	1					
54	5PS–2139E–00	GANCHO 2	1					

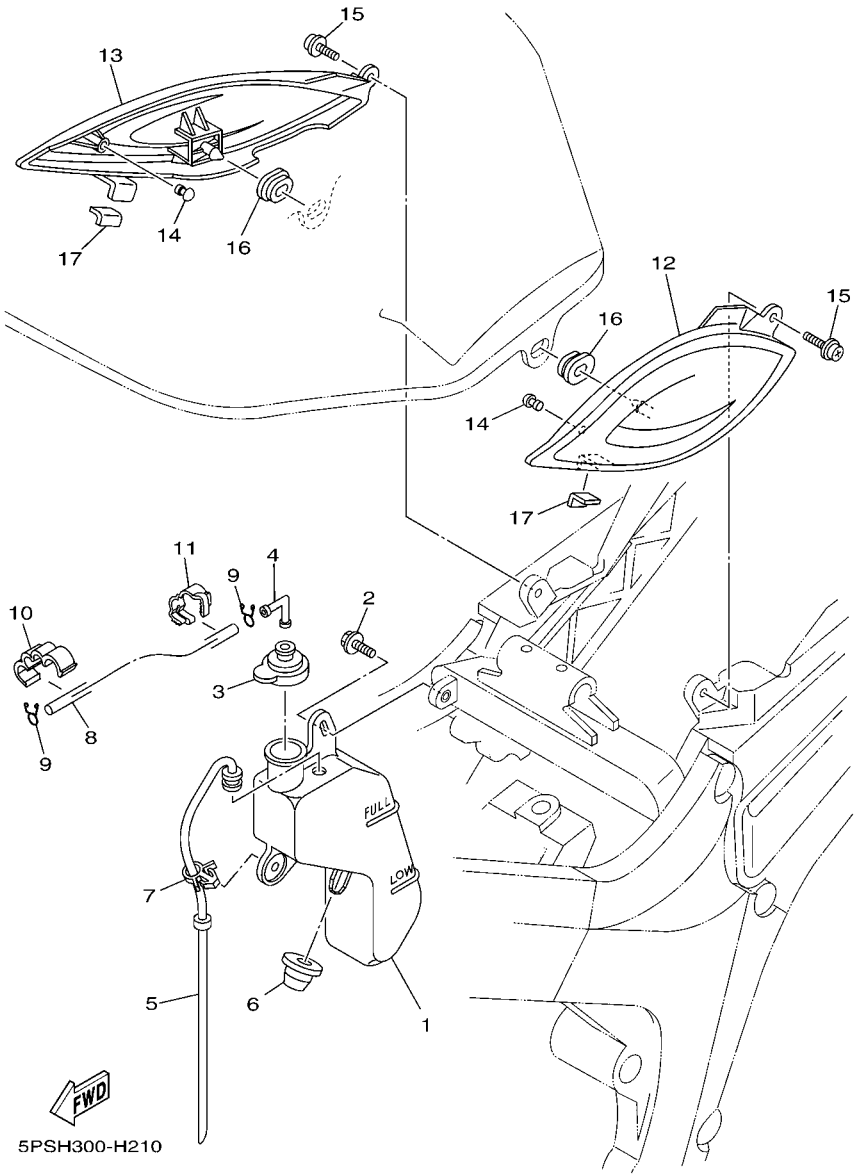

FIG. 21 CUBIERTA LATERAL

REF. Nº	CODIGO Nº	DESCRIPCION	5PSK					OBSERVACIONES
1	5PS–21871–00	TANQUE DE RECUPERACION	1					
2	90119–06117	TORNILLO CON ARANDELA	1					
3	5EB–21875–00	TAPA	1					
4	26H–21828–00	CODO	1					
5	5PS–21816–00	TUBO 1	1					
6	2B0–21719–00	ANILLO PROTECTOR	1					
7	90464–15157	BRIDA	1					
8	90445–083J5	TUBO (L600)	1					
9	90467–08075	PRESILLA	2					
10	90464–10233	BRIDA	1					
11	90464–14010	BRIDA	1					
12	5PS–21711–00	CUBIERTA LATERAL 1	1					
13	5PS–21721–00	CUBIERTA LATERAL 2	1					
14	1J7–21717–00	AMORTIGUADOR	2					
15	90159–06033	TORNILLO CON VALONA	2					
16	90480–01558	TAPON	2					
17	3TB–28217–00	AMORTIGUADOR 1	2					

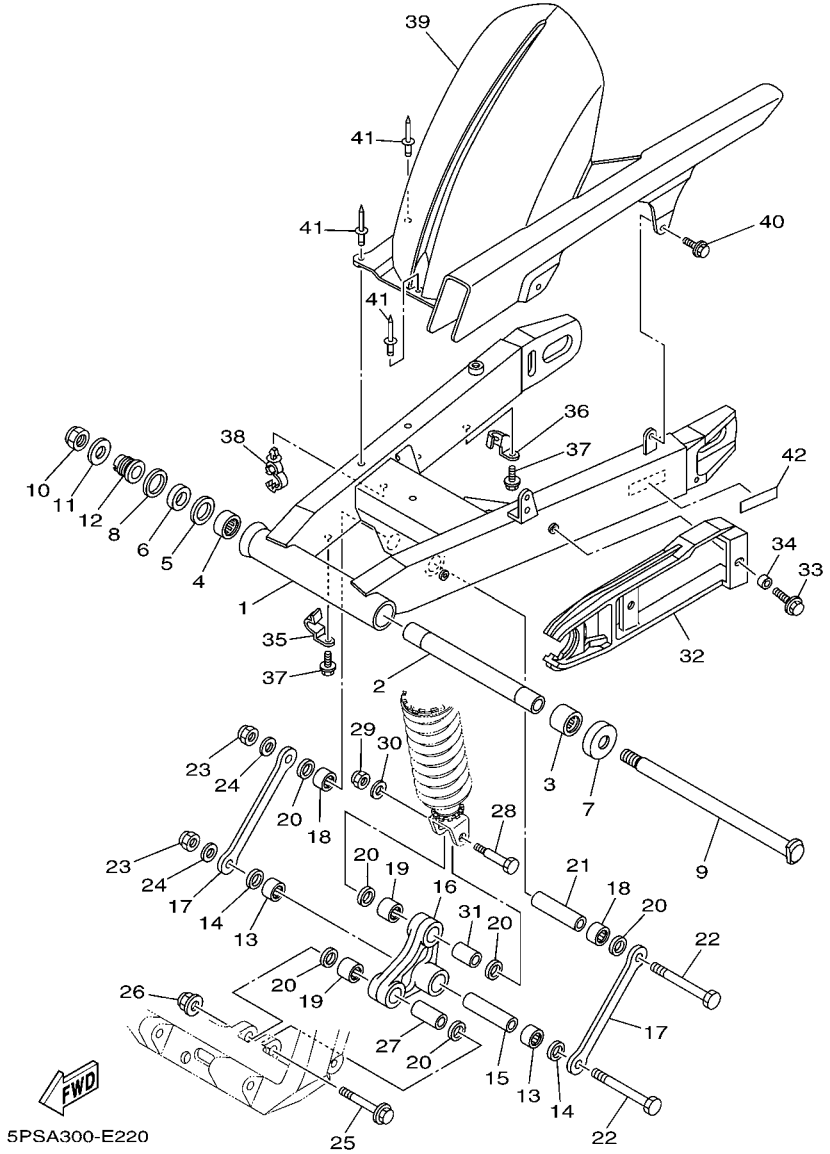

FIG. 22 BRAZO TRASERO

REF. Nº	CODIGO Nº	DESCRIPCION	5PSK					OBSERVACIONES
1	5PS–22110–10	BRAZO TRASERO COMPLETO	1					
2	5PS–22184–00	BUJE	1					
3	93315–42523	COJINETE DE RODILLOS	1					
4	93315–42536	COJINETE DE RODILLOS	1					
5	5EB–22127–00	CUNA	1					
6	5EB–22123–00	BUJE 1	1					
7	3FV–22128–00	TAPA DE EMPIJE 1	1					
8	93109–33049	SELLO ACEITE	1					
9	5PS–22141–00	EJE DEL BARCULANTE	1					
10	90185–18167	TUERCA AUTOBLOCANTE	1					
11	90201–186M4	ARANDELA PLANA	1					
12	5PS–22125–00	PERNO	1					
13	93317–21746	COJINETE	2					
14	93109–17071	SELLO ACEITE	2					
15	90387–126Y1	ESPACIADOR	1					
16	5PS–2217A–00	BRAZO REEURIO	1					
17	5PS–2217M–00	BRAZO 1	2					
18	93317–21746	COJINETE	2					
19	93317–31771	COJINETE	2					
20	93109–17071	SELLO ACEITE	6					
21	90387–126Y1	ESPACIADOR	1					
22	90101–12749	TORNILLO	2					
23	90185–12119	TUERCA AUTOBLOCANTE	2					
24	92907–12600	ARANDELA	2					
25	90105–10323	TORNILLO	1					
26	95607–10200	TUERCA DE AUTO-CIERRE	1					
27	90387–1012B	ESPACIADOR	1					

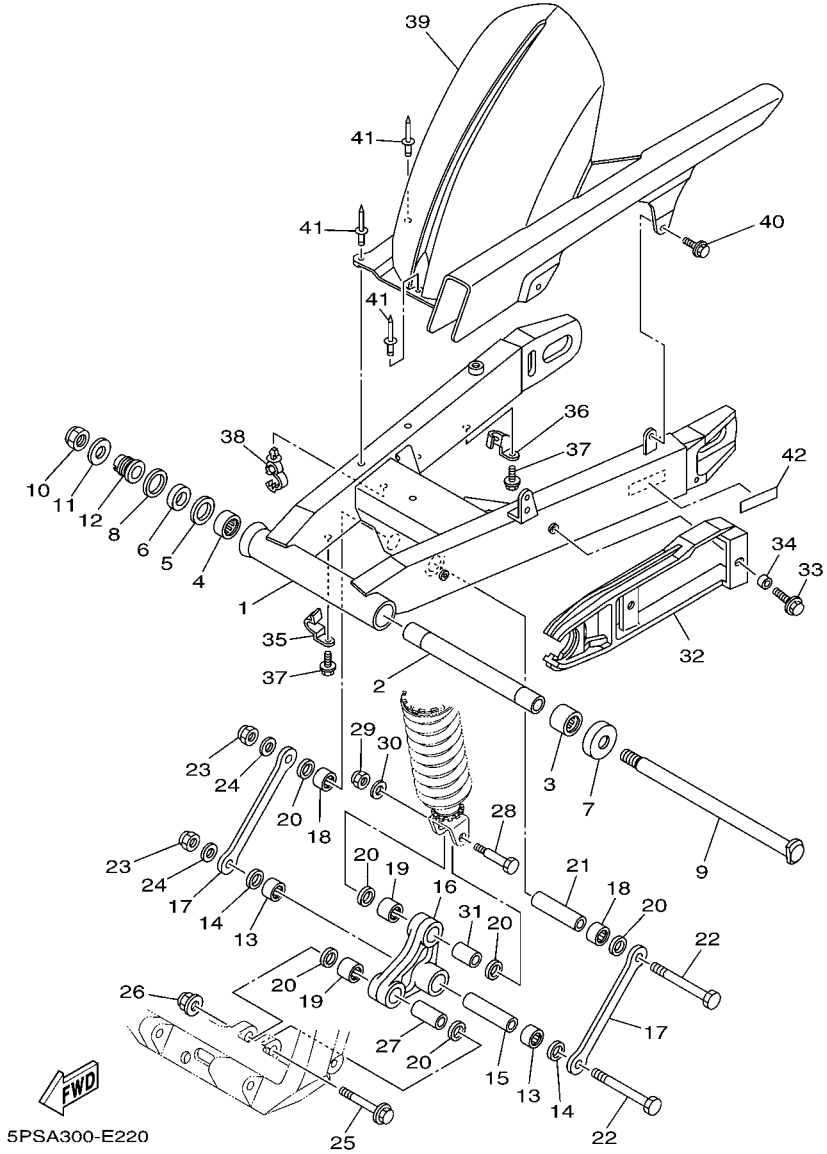

FIG. 22 BRAZO TRASERO

REF. Nº	CODIGO Nº	DESCRIPCION	5PSK					OBSERVACIONES
28	90101–10659	TORNILLO	1					
29	95617–10100	PERNO DE PUNTAL	1					
30	90201–101J1	ARANDELA PLANA	1					
31	90387–127W0	ESPACIADOR	1					
32	5PS–22151–00	SELLO DE GUARDA	1					
33	90119–06096	TORNILLO CON ARANDELA	2					
34	90387–06372	ESPACIADOR	2					
35	5PS–25875–00	SOPORTE DE MANGUERA FRENO 1	1					
36	4NK–25876–00	SOPORTE DE MANGUERA FRENO 2	1					
37	95027–06016	PERNO, DE BRIDA	2					
38	90464–18002	BRIDA	2					
39	5PS–21650–00	GUARDABARRO TRANSERO COMP.	1					
40	90119–06117	TORNILLO CON ARANDELA	2					
41	90269–08001	REMACHE	3					
42	5PS–21668–10	ETIQUETA DE FRANJA	1					

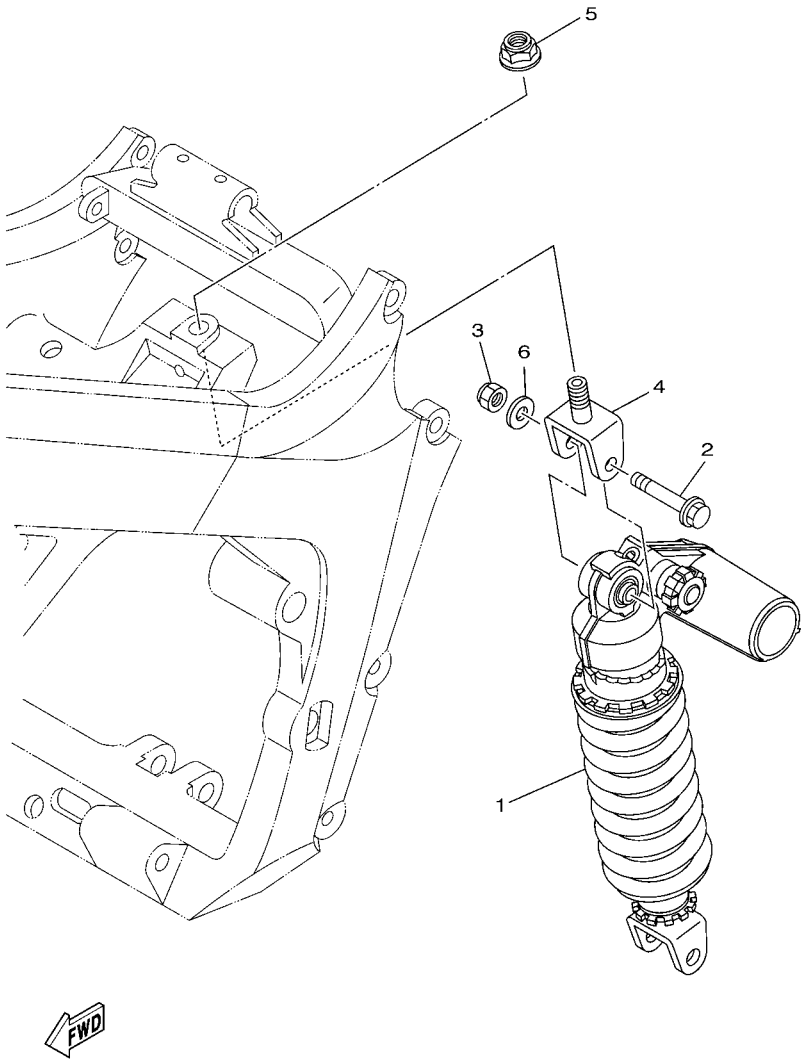

FIG. 23 SUSPENSION TRASERO

REF. Nº	CODIGO Nº	DESCRIPCION	5PSK					OBSERVACIONES
1	5PS–22210–20	AMORTIGUADOR TRASERO COMPLETO	1					
2	90105–10402	TORNILLO	1					
3	95617–10100	PERNO DE PUNTAL	1					
4	5PS–22219–01	SOPORTE SUPERIOR	1					
5	95607–14200	TUERCA DE AUTO-CIERRE	1					
6	90201–101J1	ARANDELA PLANA	1					

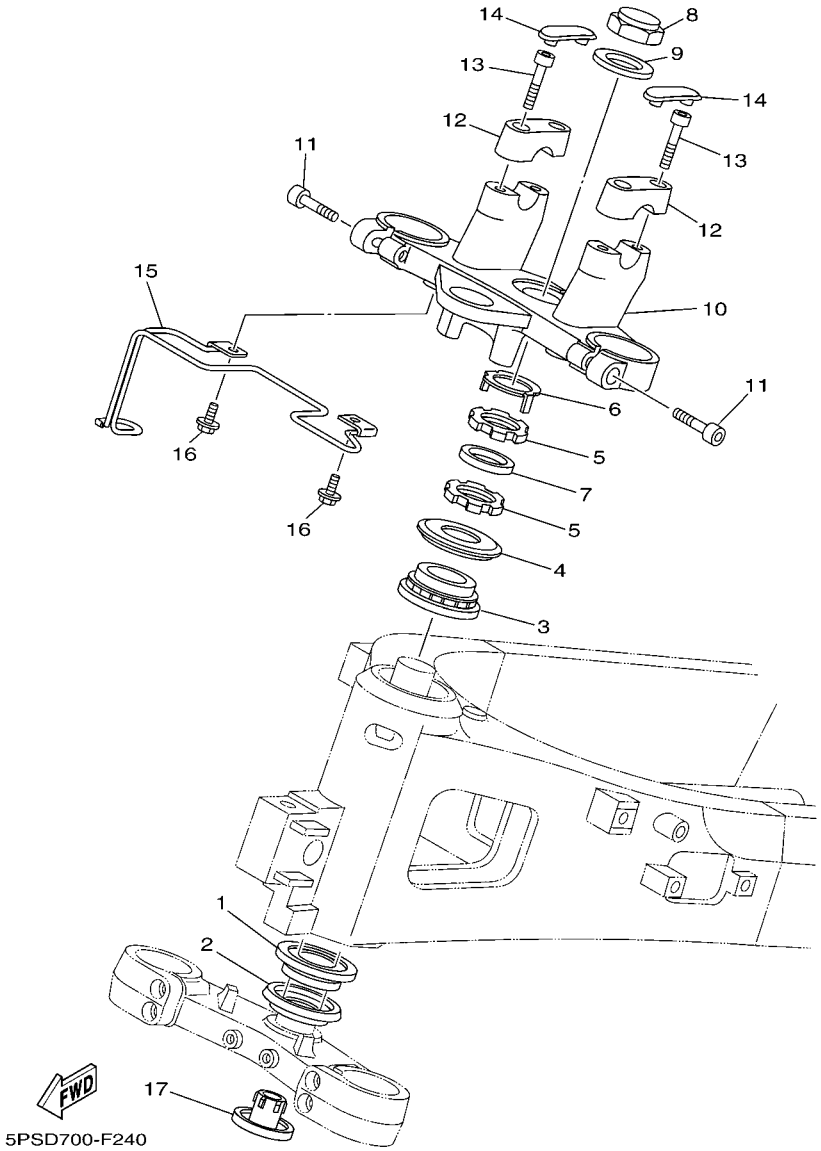

FIG. 24 DIRECCION

REF. Nº	CODIGO Nº	DESCRIPCION	5PSK					OBSERVACIONES
1	93399–99932	COJINETE	1					
2	3FV–23462–00	SELLO PARA POLVO	1					
3	93399–99932	COJINETE	1					
4	4XV–23415–01	CUBIERTA DE PISTA DE BOLAS 1	1					
5	90179–30691	TUERCA	2					
6	5VY–23418–00	ARANDELA ESPECIAL	1					
7	90202–30235	ARANDELA DE PLANA	1					
8	90176–28083	TUERCA CORONA	1					
9	90201–281U8	ARANDELA PLANA	1					
10	5PS–23435–20	PLATINA SUPERIOR	1					
11	91314–08030	TORNILLO ALLEN	2					
12	4H7–23441–01–98	SOPORTE DE MANUBRIO	2					LGB PARA SMX,MDS
13	91314–08030	TORNILLO ALLEN	4					
14	12R–23469–00	TAPA DE PERNO	2					
15	5PS–23389–01	GUIA DE CABLE	1					
16	90119–06228	TORNILLO CON ARANDELA	2					
17	4KM–23123–01	CUBIERTA INFERIOR	1					

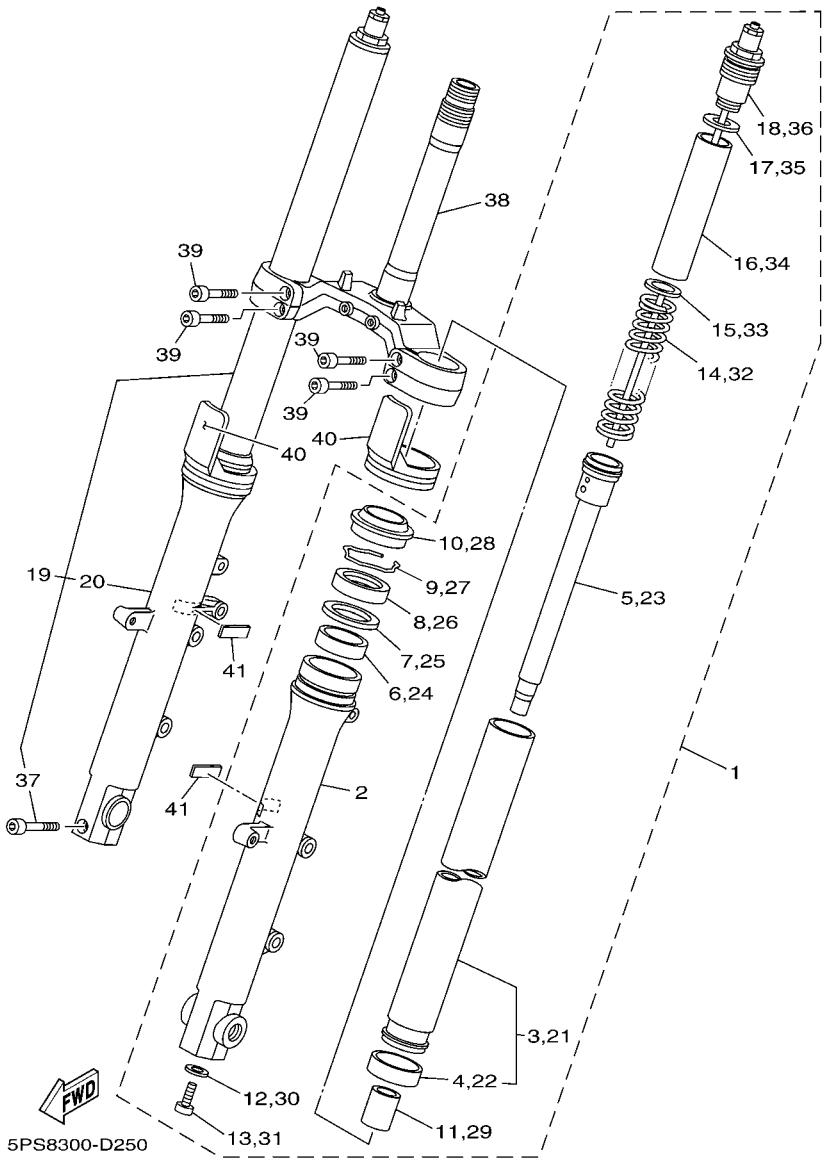

FIG. 25 HORQUILLA DELANTERA

REF. Nº	CODIGO Nº	DESCRIPCION	5PSK					OBSERVACIONES
1	5PS–23102–30	HORQUILLA DELANTERA COMPL.(MI)	1					
2	5PS–23126–30	.TUBO EXTERIOR (IZQUIERDO)	1					
3	5PS–23110–10	.TUBO INTERIOR COMPLETO 1	1					
4	3GM–23171–00	..PISTON HORQUILLA DELANT.	1					
5	5PS–23170–10	.CILINDRO COMPL DE HORQ DELANT	1					
6	3GM–23125–00	.METAL CORREDIZO 1	1					
7	4V4–23146–L0	.ARANDELA DE SELLO DE ACEITE	1					
8	4PU–23145–01	.RETEN DE ACEITE	1					
9	4V4–23153–L0	.ANILLO DE ENGANCHE	1					
10	4PU–23144–00	.GUARDAPOLVO	1					
11	5PS–23173–00	.VASTAGO AHUSADO	1					
12	509–23158–L0	.EMPAQUE	1					
13	278–23181–50	.TORNILLO CABEZAHEXAGONAL	1					
14	5PS–23141–10	.RESORTE HORQUILLA DELANT.	1					
15	3LR–23149–00	.ARANDELA DE RESORTE SUPERIOR	1					
16	4GY–23118–10	.SEPARADOR	1					
17	3FV–23149–00	.ARANDELA DE RESORTE SUPERIOR	1					
18	5PS–23111–00	.PERNO DE TAPA	1					
19	5PS–23103–30	HORQUILLA DELANTERA COMPL.(MD)	1					
20	5PS–23136–30	.TUBO EXTERIOR (DERECHO)	1					
21	5PS–23110–10	.TUBO INTERIOR COMPLETO 1	1					
22	3GM–23171–00	..PISTON HORQUILLA DELANT.	1					
23	5PS–23170–10	.CILINDRO COMPL DE HORQ DELANT	1					
24	3GM–23125–00	.METAL CORREDIZO 1	1					
25	4V4–23146–L0	.ARANDELA DE SELLO DE ACEITE	1					
26	4PU–23145–01	.RETEN DE ACEITE	1					
27	4V4–23153–L0	.ANILLO DE ENGANCHE	1					

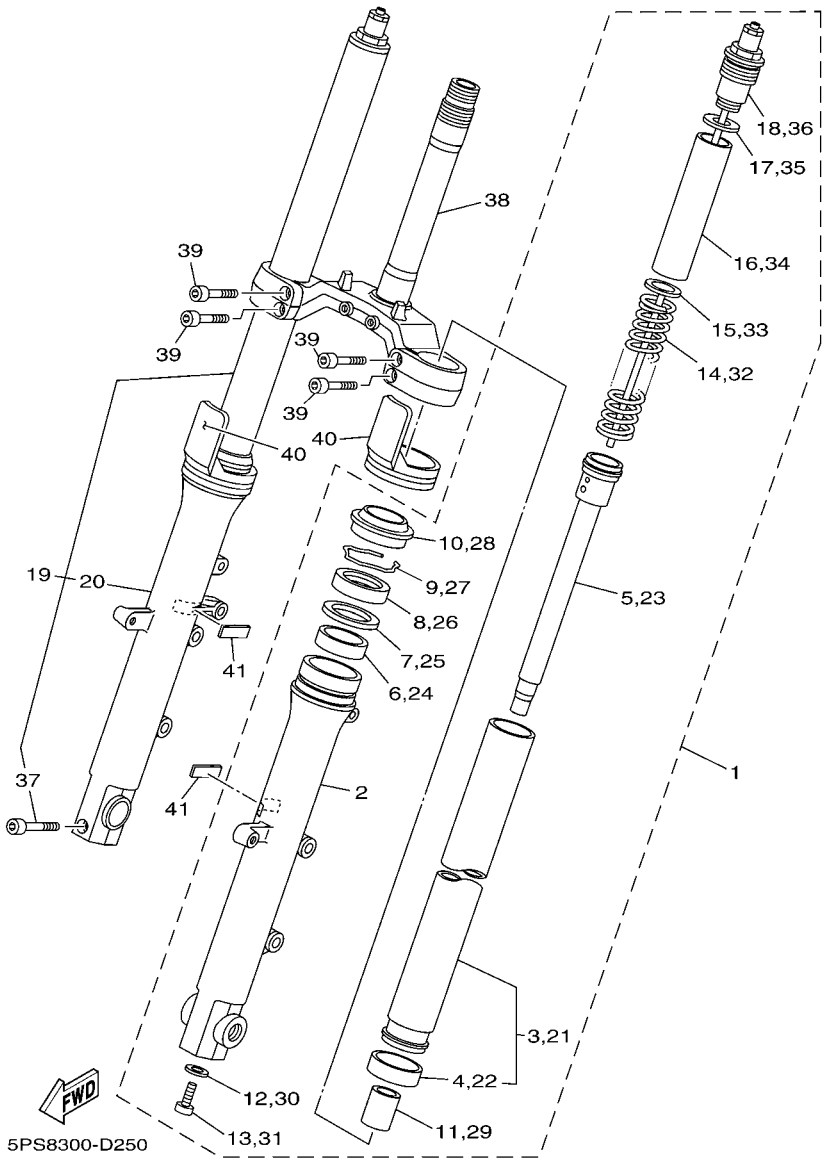

FIG. 25 HORQUILLA DELANTERA

REF. Nº	CODIGO Nº	DESCRIPCION	5PSK					OBSERVACIONES
28	4PU–23144–00	.GUARDAPOLVO	1					
29	5PS–23173–00	.VASTAGO AHUSADO	1					
30	509–23158–L0	.EMPAQUE	1					
31	278–23181–50	.TORNILLO CABEZAHEXAGONAL	1					
32	5PS–23141–10	.RESORTE HORQUILLA DELANT.	1					
33	3LR–23149–00	.ARANDELA DE RESORTE SUPERIOR	1					
34	4GY–23118–10	.SEPARADOR	1					
35	3FV–23149–00	.ARANDELA DE RESORTE SUPERIOR	1					
36	5PS–23111–00	.PERNO DE TAPA	1					
37	91314–08040	.TORNILLO ALLEN	1					
38	5PS–23340–20	PLATINA INFERIOR COMPLETA	1					
39	91317–08025	PERNO	4					
40	4PU–2331G–00	CUBIERTA	2					
41	4NX–21541–00	AMORTIGUADOR 1	2					

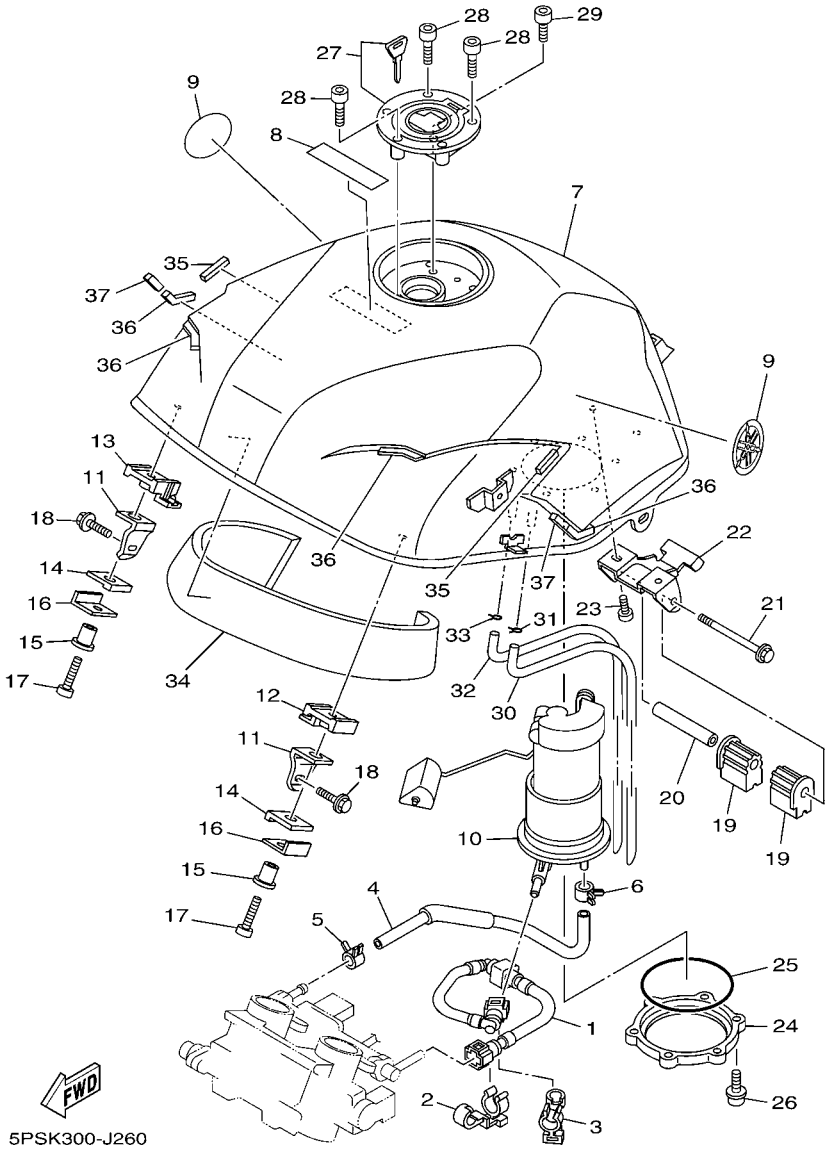

FIG. 26 DEPOSITO DE COMBUSTIBLE

REF. Nº	CODIGO Nº	DESCRIPCION	5PSK					OBSERVACIONES
1	5PS–13971–00	ANILLO DE ESPACIADOR	1					
2	90464–16007	BRIDA	1					
3	90464–16005	BRIDA	1					
4	5PS–13972–00	TUBO, COMBUSTIBLE 2	1					
5	90467–12003	PRESILLA	1					
6	90467–12003	PRESILLA	1					
7	5PS–YK241–10–P9	DEPOSITO DE COMBUSTIBLE COMP.	1					UR PARA SMX
	5PS–YK241–10–7M	DEPOSITO DE COMBUSTIBLE COMP.	1					UR PARA MDS
8	1CA–21568–00	ETIQUETA DE PRECAUCION	1					
9	5PW–2413B–00	EMBLEMA	2					
10	5PS–13907–02	BOMBA DE COMBUSTIBLE COMPLETA	1					
11	5PS–24191–00	SOPORTE DEPOSITO DE COMBUST.1	2					
12	5PS–24181–00	AMORTIGUADOR DE MONTAJE 1	1					
13	5PS–24181–10	AMORTIGUADOR DE MONTAJE 1	1					
14	5PS–24183–00	AMORTIGUADOR DE MONTAJE 3	2					
15	90387–0602Y	ESPACIADOR	2					
16	5PS–24186–00	ARANDELA ESPECIAL	2					
17	92017–06025	PERNO	2					
18	95807–08016	TORNILLO	2					
19	5EB–24183–00	AMORTIGUADOR DE MONTAJE 3	2					
20	90387–061W6	ESPACIADOR	1					
21	95027–06090	PERNO, DE BRIDA	1					
22	5PS–24192–00	SOPORTE DE DEPOSITO COMBUST.2	1					
23	92017–06010	PERNO	2					
24	5JW–24491–00	SOPORTE BOMBA COMBUSTIBLE	1					
25	5JW–24486–00	ANILLO O	1					
26	90110–05014	TORNILLO ALLEN	6					

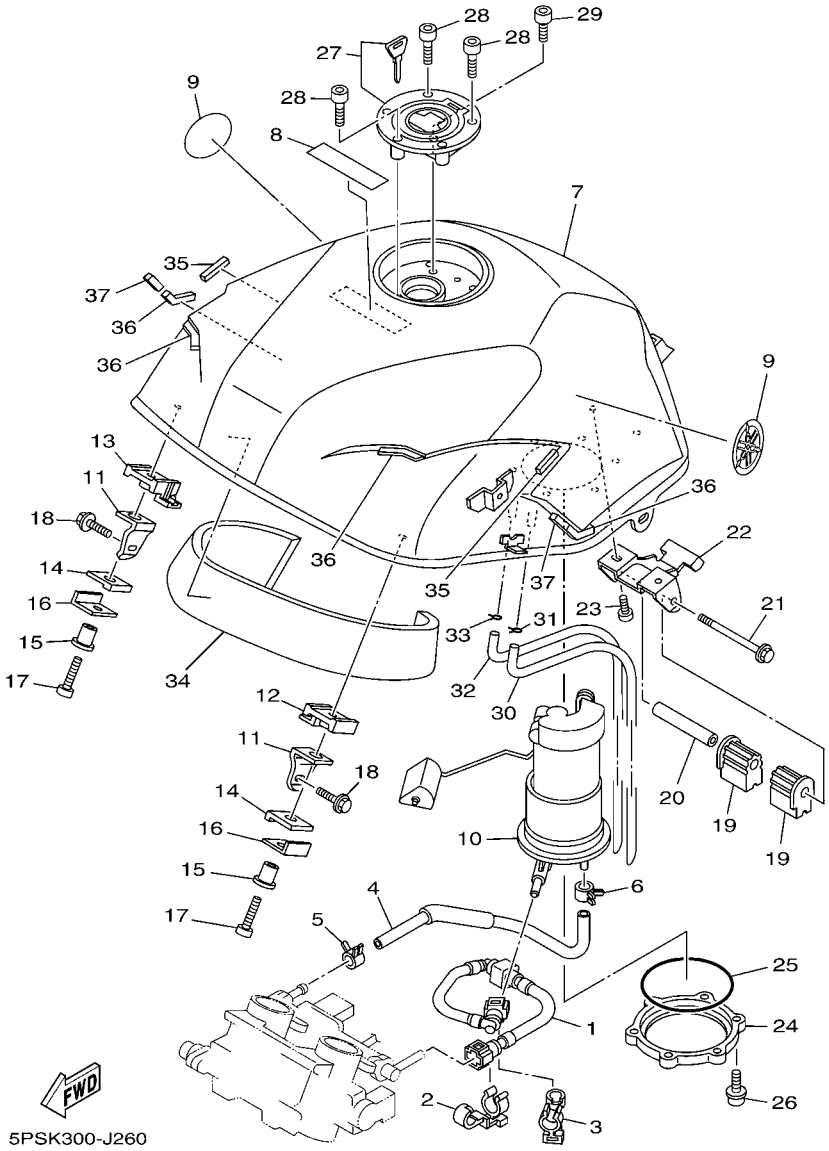

FIG. 26 DEPOSITO DE COMBUSTIBLE

REF. Nº	CODIGO Nº	DESCRIPCION	5PSK					OBSERVACIONES
27	5JJ–24602–00	TAPON COMPLETO	1					
28	90110–05112	TORNILLO ALLEN	3					
29	91317–05010	PERNO	1					
30	5PS–24318–00	TUBO DE REBOSAMIENTO	1					
31	90467–09006	PRESILLA	1					
32	5PS–24318–00	TUBO DE REBOSAMIENTO	1					
33	90467–09006	PRESILLA	1					
34	5PS–2414H–10	EQUILIBRIO, CUBIERTA	1					
35	5PS–28217–00	AMORTIGUADOR 1	2					
36	5PS–2139X–00	AMORTIGUADOR	4					
37	5PS–28372–00	AMORTIGUADOR	2					

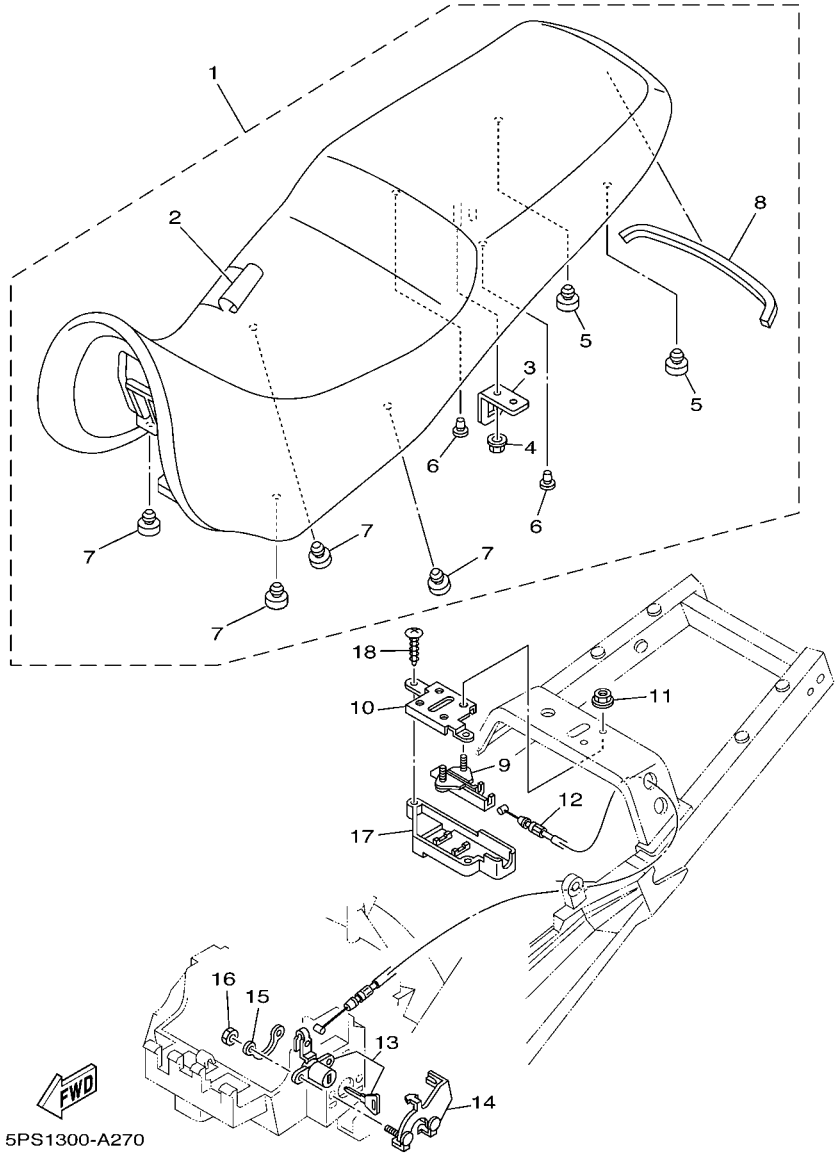

FIG. 27 ASIENTO

REF. Nº	CODIGO Nº	DESCRIPCION	5PSK					OBSERVACIONES
1	5PS–24730–20	SILLIN DOBLE COMPLETO	1					UR PARA SMX
	5PS–24730–30	SILLIN DOBLE COMPLETO	1					UR PARA MDS
2	5PS–2470F–20	.FUNDADE SILLIN	1					UR PARA SMX
	5PS–2470F–30	.FUNDADE SILLIN	1					UR PARA MDS
3	4HM–24728–00	.SOPORTE DE ASIENTO	1					
4	90179–06635	.TUERCA	1					
5	22W–24741–00	.COJIN DE ASIENTO	2					
6	90338–06018	.TAPON	2					
7	5PS–24741–00	.COJIN DE ASIENTO	4					
8	5LV–24737–00	.AMORTIGUADOR DE ASIENTO	1					
9	4BP–24780–00	CERRADURA SILLIN COMPLETO	1					
10	5PS–24792–00	PLACA	1					
11	95707–06500	TUERCA DE BRIDA	2					
12	5PS–2478E–00	CABLE	1					
13	2TV–W2470–00	JUEGO DE ROTOR	1					
14	5PS–2117K–00	SOPORTE DE CERRADURA	1					
15	5PS–24746–00	ARANDELA DE ASIENTO	1					
16	90170–06183	TUERCA	2					
17	5JJ–2475X–01	CUBIERTA 2	1					
18	97707–40012	TORNILLO ROSCA HEMBRA	2					

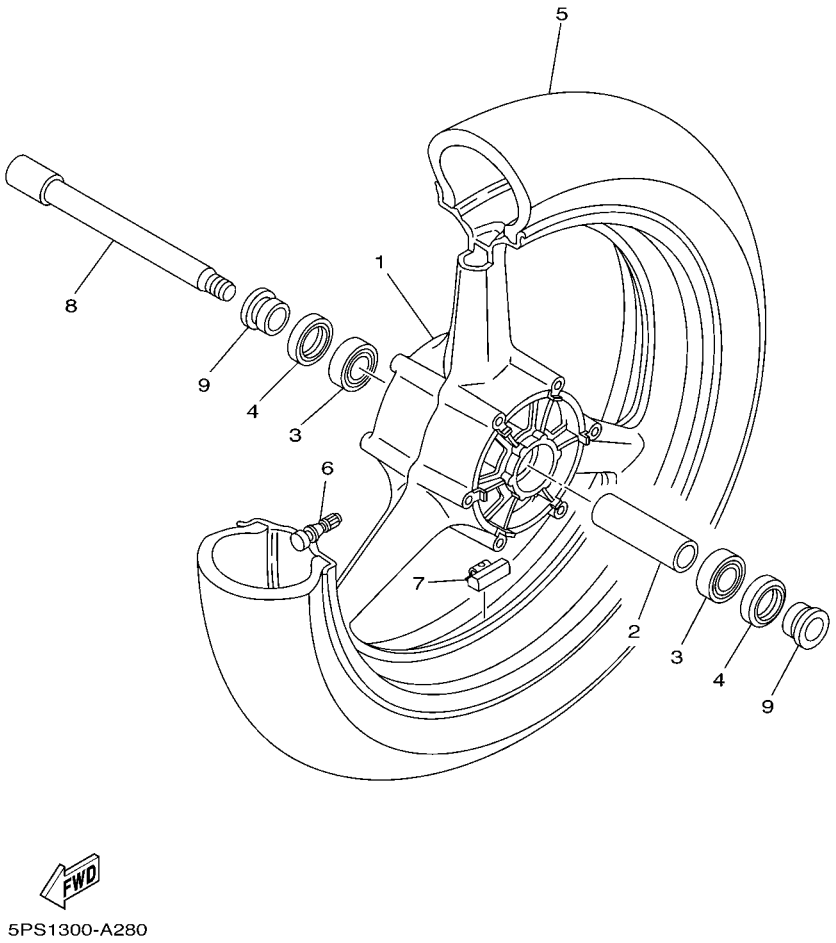

FIG. 28 RUEDA DELANTERA

REF. Nº	CODIGO Nº	DESCRIPCION	5PSK					OBSERVACIONES
1	5PS–25168–00–98	RUEDA FUNDIDA DELANTERA	1					LGB PARA SMX,MDS
2	4XV–25117–00	ESPACIADOR DE COJINETE	1					
3	93306–00420	COJINETE	2					
4	93106–28043	SELLO ACEITE	2					
5	94112–18019	NEUMATICO(120/70ZR18M/C(59W))	1					DUNLOP
6	93900–00030	VALVULA DE ARO (TR412)	1					TAIHEIYO
7	5MT–25398–00	BALANCEADOR DE RUEDA (10G)	1					UN
	5MT–25398–10	BALANCEADOR DE RUEDA (20G)	1					UN
	5MT–25398–20	BALANCEADOR DE RUEDA (30G)	1					UN
8	4XV–25181–10	EJE DE LA RUEDA	1					
9	90387–2200T	ESPACIADOR	2					

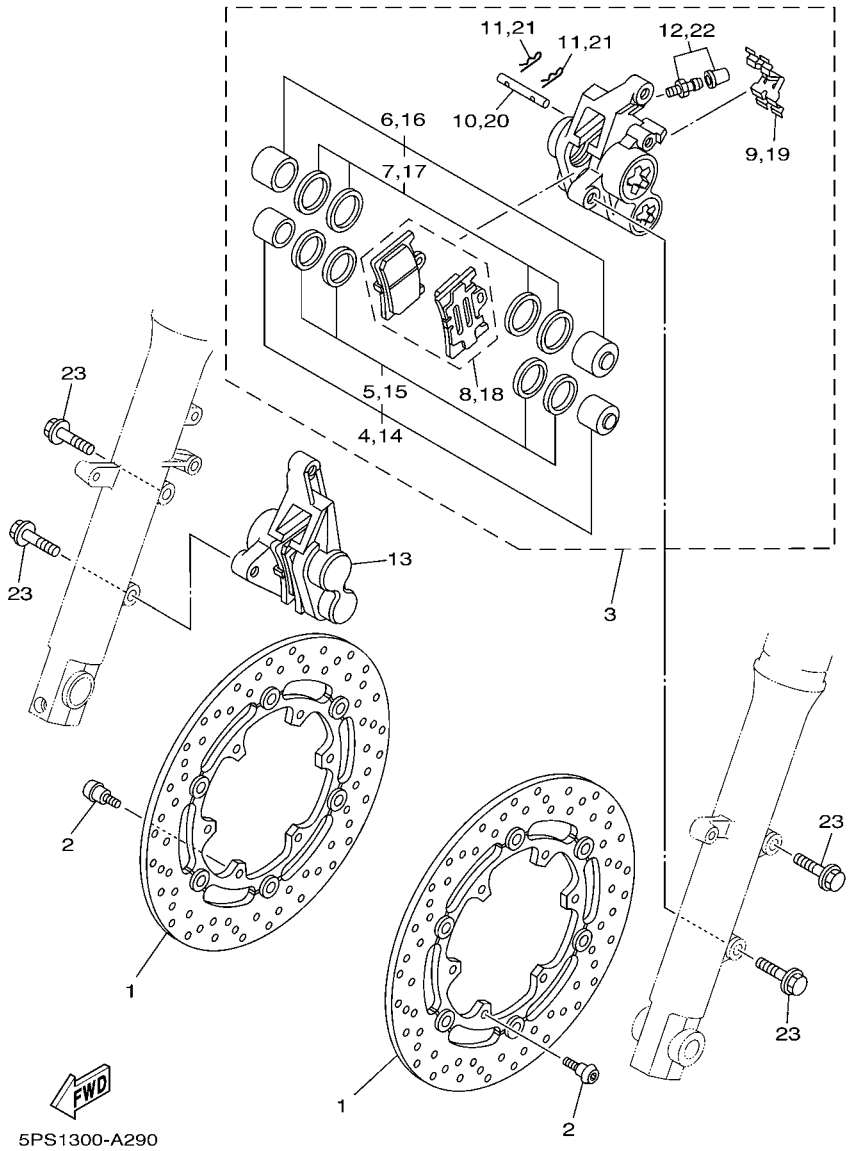

FIG. 29 CALIBRE FRENO DELANTERA

REF. Nº	CODIGO Nº	DESCRIPCION	5PSK					OBSERVACIONES
1	5PX–2581T–00	DISCO DE FRENO	2					
2	90109–064G6	PERNO	12					
3	2D1–2580T–00	CALIBRE COMPLETO (IZQUIERDO)	1					
4	4SV–W0057–00	.PISTON COMPLETO PINZA	1					
5	3MA–W0047–10	..JUEGO DE RETENES DE PINZA	1					
6	4SV–W0057–10	.PISTON COMPLETO PINZA	1					
7	3GM–W0047–10	..JUEGO DE RETENES DE PINZA	1					
8	5SL–W0045–00	.JUEGO DE COJIN DE FRENO	1					
9	4SV–25919–00	.SOPORTE DE PASTILLAS	1					
10	4SV–25924–00	.PASADOR	1					
11	3GM–25925–00	.PRESILLA	2					
12	1J3–W0048–00	.CJTO TORNILLO DE PURGA	1					
13	2D1–2580U–00	CALIBRE COMPLETO (DERECHO)	1					
14	4SV–W0057–00	.PISTON COMPLETO PINZA	1					
15	3MA–W0047–10	..JUEGO DE RETENES DE PINZA	1					
16	4SV–W0057–10	.PISTON COMPLETO PINZA	1					
17	3GM–W0047–10	..JUEGO DE RETENES DE PINZA	1					
18	5SL–W0045–00	.JUEGO DE COJIN DE FRENO	1					
19	4SV–25919–00	.SOPORTE DE PASTILLAS	1					
20	4SV–25924–00	.PASADOR	1					
21	3GM–25925–00	.PRESILLA	2					
22	1J3–W0048–00	.CJTO TORNILLO DE PURGA	1					
23	90105–105A7	TORNILLO	4					

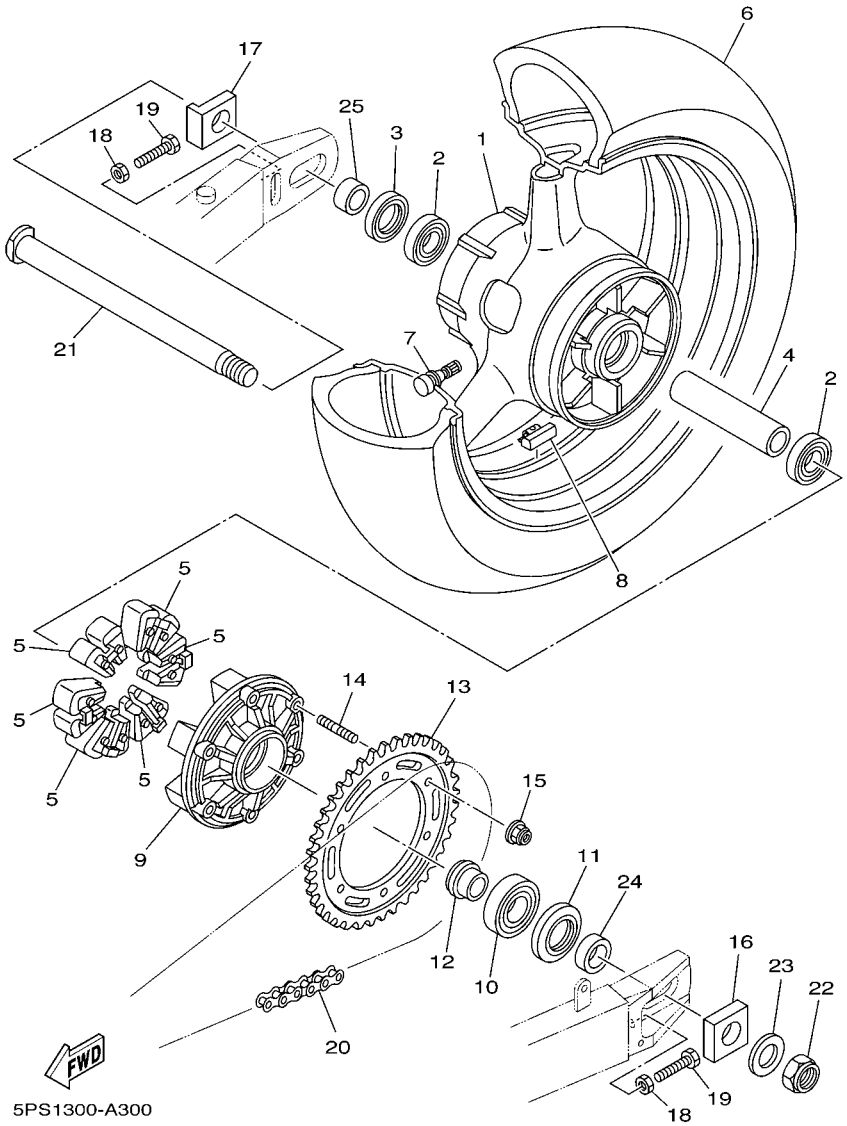

FIG. 30 RUEDA TRASERA

REF. Nº	CODIGO Nº	DESCRIPCION	5PSK					OBSERVACIONES
1	5PS–25338–00–98	RUEDA FUNDIDA TRASERA	1					LGB PARA SMX,MDS
2	93306–07806	COJINETE	2					
3	93106–35042	SELLO ACEITE	1					
4	5PS–25317–00	ESPACIADOR DE COJINETE	1					
5	5EA–25364–00	AMORTIGUADOR	6					
6	94116–17008	NEUMATICO (160/60ZR17M/C(69W))	1					DUNLOP
7	93900–00030	VALVULA DE ARO (TR412)	1					TAIHEIYO
8	5MT–25398–00	BALANCEADOR DE RUEDA (10G)	1					UN
	5MT–25398–10	BALANCEADOR DE RUEDA (20G)	1					UN
	5MT–25398–20	BALANCEADOR DE RUEDA (30G)	1					UN
9	5PS–25366–00	EMBRAGUE DE MASA	1					
10	93306–20644	COJINETE	1					
11	93106–40041	SELLO ACEITE	1					
12	4FM–25377–00	COLLAR DE RUEDA	1					
13	5PS–25442–00	CORONA (42T)	1					
14	90116–10575	ESPARRAGO	6					
15	95607–10200	TUERCA DE AUTO-CIERRE	6					
16	5EB–25388–00	TIRADOR DE CADENA 1	1					
17	5PS–25389–00	TIRADOR DE CADENA 2	1					
18	95302–08600	TUERCA	2					
19	90101–08013	TORNILLO	2					
20	94581–46118	KADENA (D.I.D.525HV KAI 118LE)	1					
21	4FM–25381–20	EJE DE RUEDA	1					
22	90185–24007	TUERCA AUTOBLOCANTE	1					
23	90201–25020	ARANDELA PLANA	1					
24	5PS–25376–00	COLLAR DE RUEDA	1					
25	5EB–25377–00	COLLAR DE RUEDA	1					

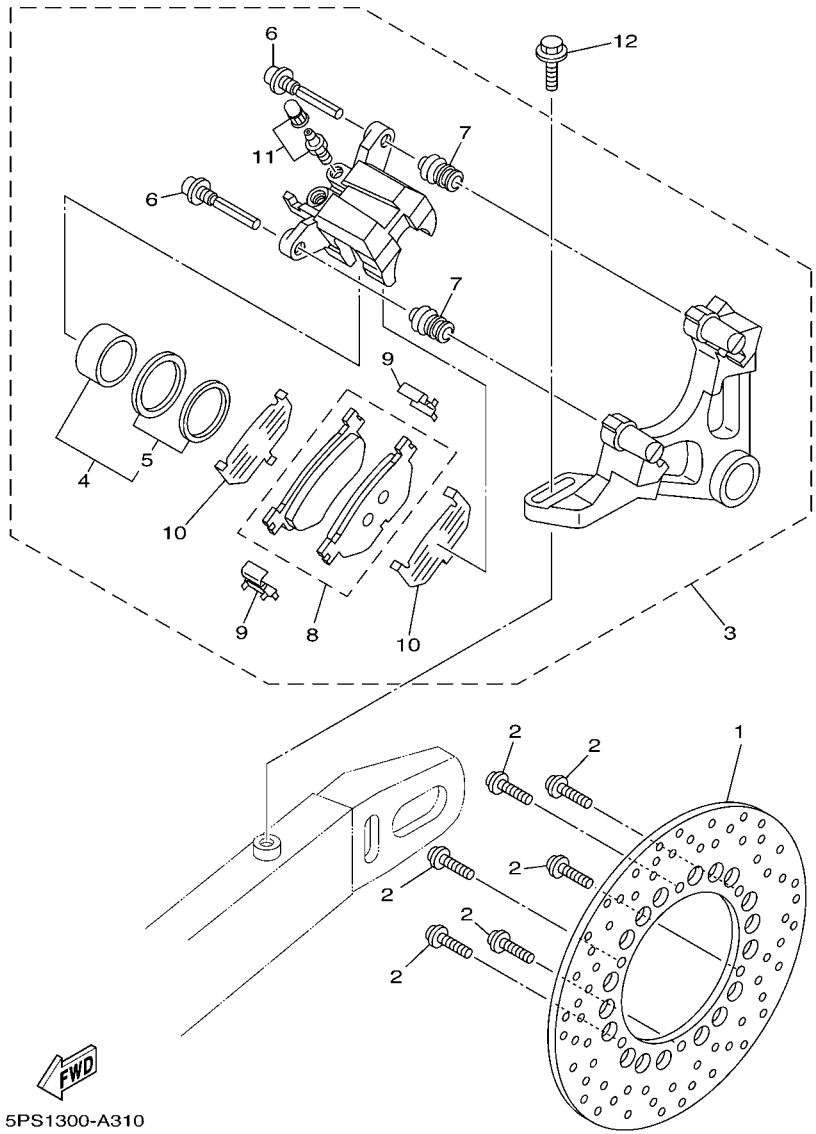

FIG. 31 CALIBRE FRENO TRASERA

REF. Nº	CODIGO Nº	DESCRIPCION	5PSK					OBSERVACIONES
1	4JH–2582W–00	DISCO DE FRENO TRASEROS 2	1					
2	90109–083G4	PERNO	6					
3	5PS–2580W–01	CALIBRE COMPLETO TRASEROS 2	1					
4	5JW–W0057–00	.PISTON COMPLETO PINZA	1					
5	5JW–W0047–00	..JUEGO DE RETENES DE PINZA	1					
6	5JW–25914–10	.PASADOR	2					
7	4TT–25937–00	.FUNDA	2					
8	5PS–W0046–00	.JUEGO DE PASTILLAS DE FRENO 2	1					
9	5JW–25919–00	.SOPORTE DE PASTILLAS	2					
10	5GJ–25827–00	.CUNA DE CALIBRE	2					
11	51L–W0048–00	.CJTO TORNILLO DE PURGA	1					
12	90105–08113	TORNILLO	1					

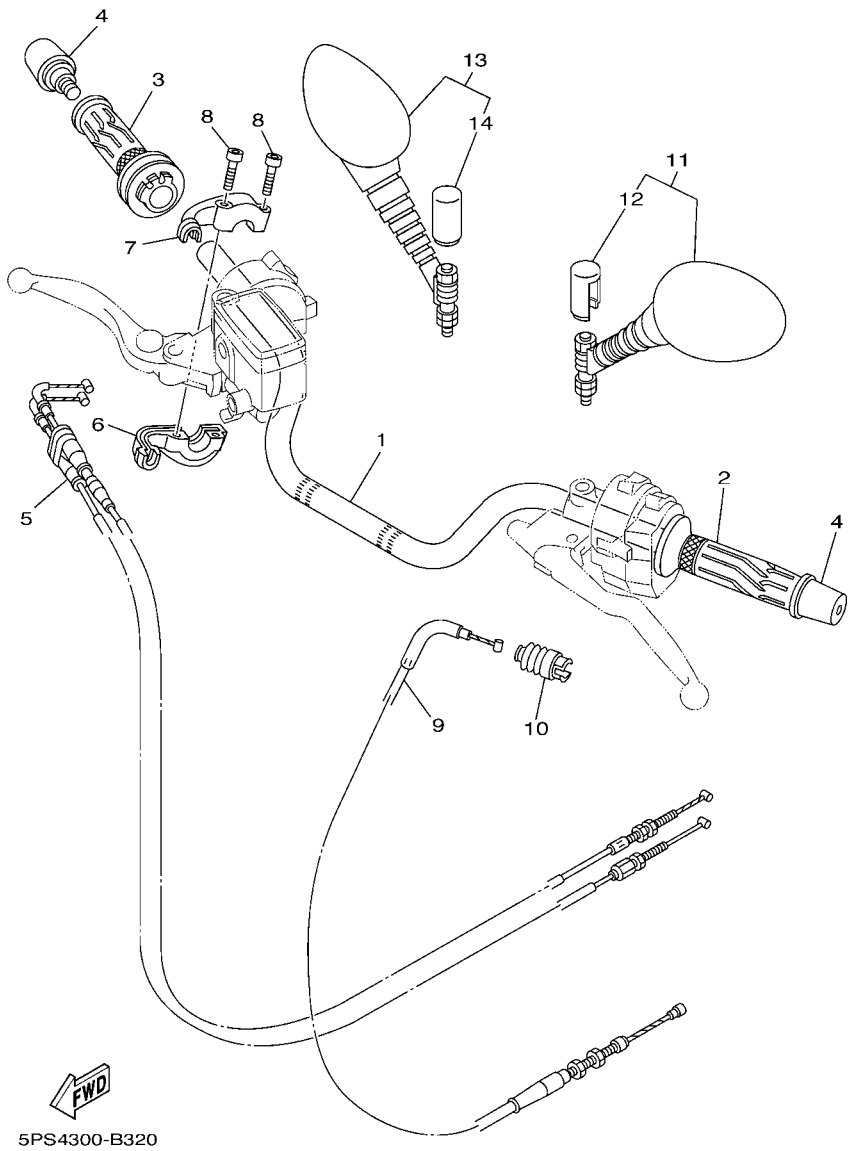

FIG. 32 MANILLAR & CABLE

REF. Nº	CODIGO Nº	DESCRIPCION	5PSK					OBSERVACIONES
1	5PS–26111–10	MANUBRIO	1					
2	5JW–26241–00	EMPUNADURA	1					
3	5PS–26240–00	EMPUNADURA COMPLETA	1					
4	51J–26246–01	EXTREMO DE EMPUNADURA	2					
5	5PS–26302–00	CABLE DE ACELERADOR COMPLETO	1					
6	4KG–26281–00	TAPA DE EMPUNADURA SUPERIOR	1					
7	3XW–26282–01	TAPA, EMPUNADURA PLATINA	1					
8	91317–05035	PERNO	2					
9	5PS–26335–01	CABLE DE EMBRAGUE	1					
10	1E6–26342–00	FUNDA DE CABLE	1					
11	4TX–26280–50	ESPEJO COMPLETO (IZQUIERDO)	1					
12	5PS–26133–20	.TAPA	1					
13	4TX–26290–50	ESPEJO COMPLETO (DERECHO)	1					
14	5PS–26133–20	.TAPA	1					

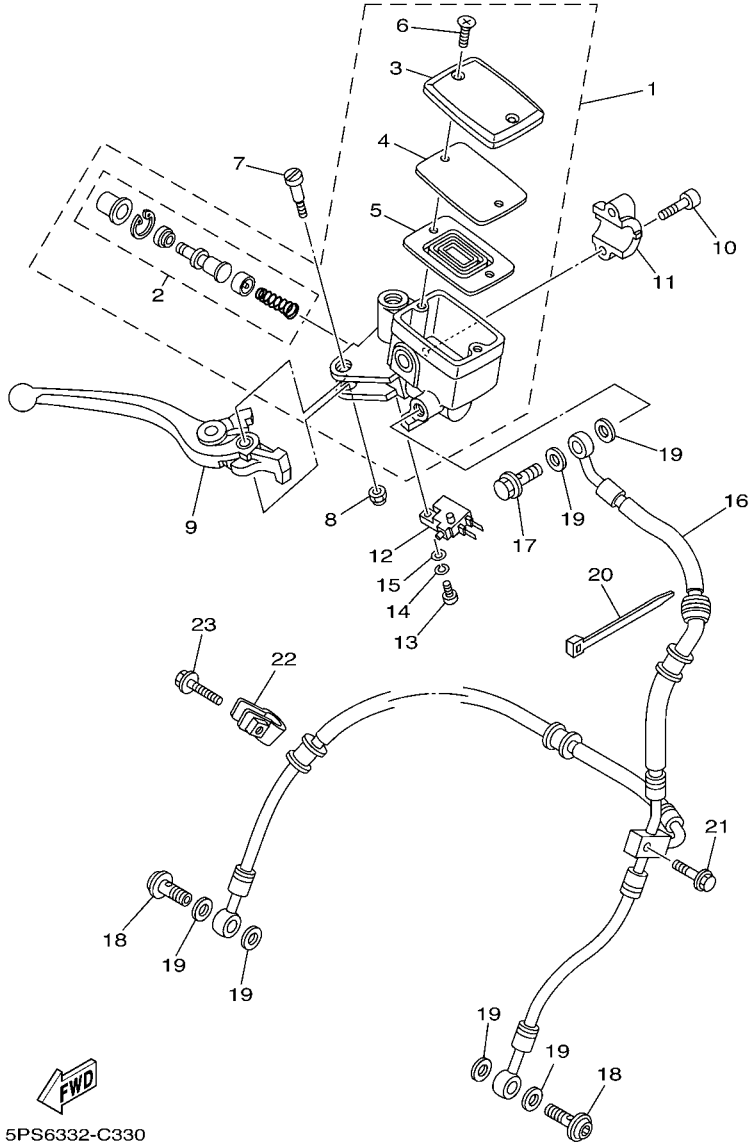

FIG. 33 CILINDRO MAESTRO DELANTERO

REF. Nº	CODIGO Nº	DESCRIPCION	5PSK					OBSERVACIONES
1	5PS–W2587–00	CILINDRO MAESTRO SUB COMPLET	1					
2	5VS–W0041–00	.JUEGO DE CILINDRO MAESTRO	1					
3	5VS–25852–00	.TAPA DE TANQUE DE RESERVA	1					
4	5VS–25855–00	.BUJE DE DIAFRAGMA	1					
5	20S–25854–00	.EMPAQUE,DIAFRAGMA	1					
6	5VS–2589H–00	.TORNILLO	2					
7	5VS–2589F–00	PERNO DE PALANCA	1					
8	95617–06100	TUERCAAUTOBLOCANTE	1					
9	5VS–83922–00	PALANCA 2	1					
10	5VS–26332–00	PERNO	2					
11	5VS–25867–00	SOPORTE DE CILINDRO MAESTRO	1					
12	4HM–83980–00	INTERRUP. DE PARADA DELANTERO	1					
13	98502–04012	TORNILLO	1					
14	92902–04100	ARANDELA	1					
15	92902–04600	ARANDELA	1					
16	5PS–25872–11	MANGUERA DE FRENO 1	1					
17	90401–10020	PERNO DE UNION	1					
18	90401–10020	PERNO DE UNION	2					
19	90430–10005	JUNTA	6					
20	1UA–82591–00	BANDA	1					
21	90105–06790	TORNILLO	1					
22	2R8–25876–20	SOPORTE DE MANGUERA FRENO 2	1					
23	90105–06790	TORNILLO	1					

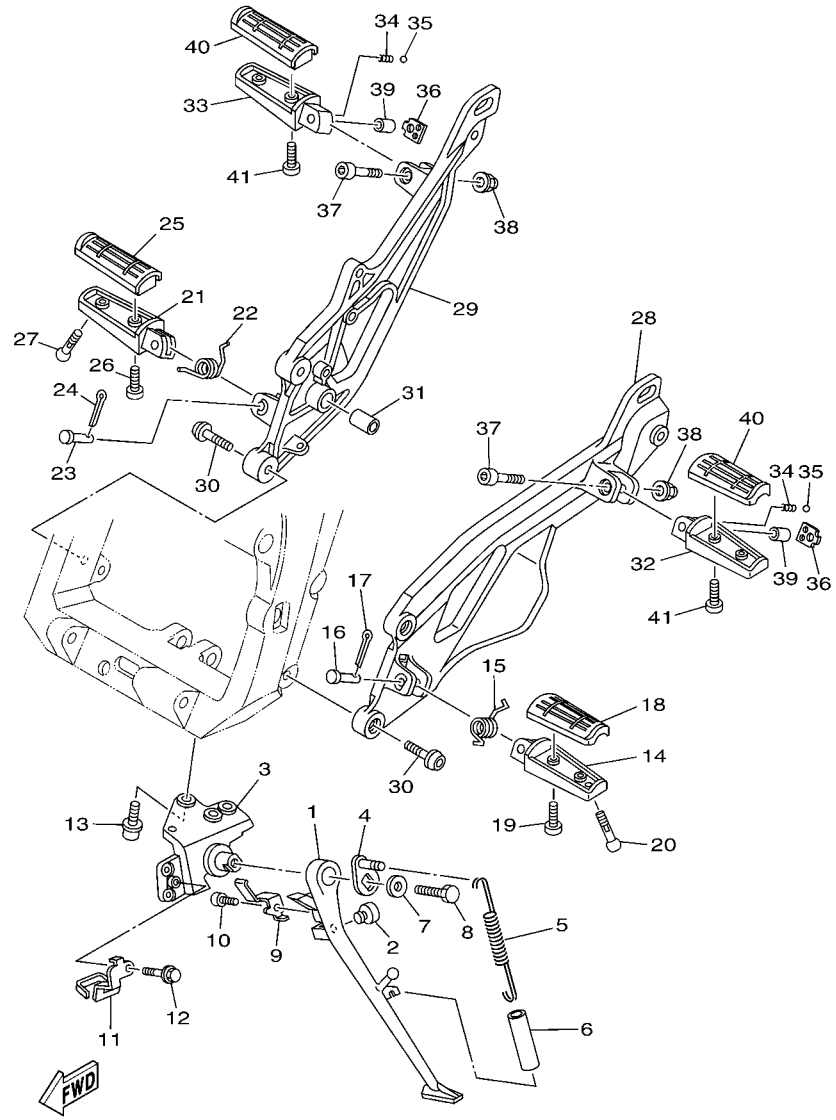

FIG. 34 SOPORTE & APOYAPIE

REF. Nº	CODIGO Nº	DESCRIPCION	5PSK					OBSERVACIONES
1	5PS–27311–00	PUNTAL LATERAL	1					
2	128–27114–00	TOPE DE PUNTAL PRINCIPAL	1					
3	5PS–27321–00	SOPORTE DE PUNTAL LATERAL	1					
4	5PS–27352–00	GANCHO DE PUNTAL LATERAL	1					
5	90506–20008	RESORTE DE TENSION	1					
6	90445–197J2	TUBO (L60)	1					
7	90201–081R9	ARANDELA PLANA	1					
8	90101–08662	TORNILLO	1					
9	5JJ–27315–00	CONEXION DE PUNTAL LATERAL	1					
10	90110–06226	TORNILLO ALLEN	1					
11	5PS–27323–00	SOPORTE 1	1					
12	95027–06010	PERNO, DE BRIDA	1					
13	90109–082F5	PERNO	3					
14	4BH–27451–01	APOYAPIE	1					
15	90508–20572	RESORTE DE TORSION	1					
16	90240–08084	PASADOR CON HOYO	1					
17	91401–25015	CHAVETA	1					
18	3YX–27413–00	CUBIERTA DE APOYAPIE	1					
19	90157–05079	TORNILLO CABEZA CONICA PLANA	2					
20	90109–08174	PERNO	1					
21	4BH–27461–01	APOYAPIE	1					
22	90508–20572	RESORTE DE TORSION	1					
23	90240–08084	PASADOR CON HOYO	1					
24	91401–25015	CHAVETA	1					
25	3YX–27413–00	CUBIERTA DE APOYAPIE	1					
26	90157–05079	TORNILLO CABEZA CONICA PLANA	2					
27	90109–08174	PERNO	1					

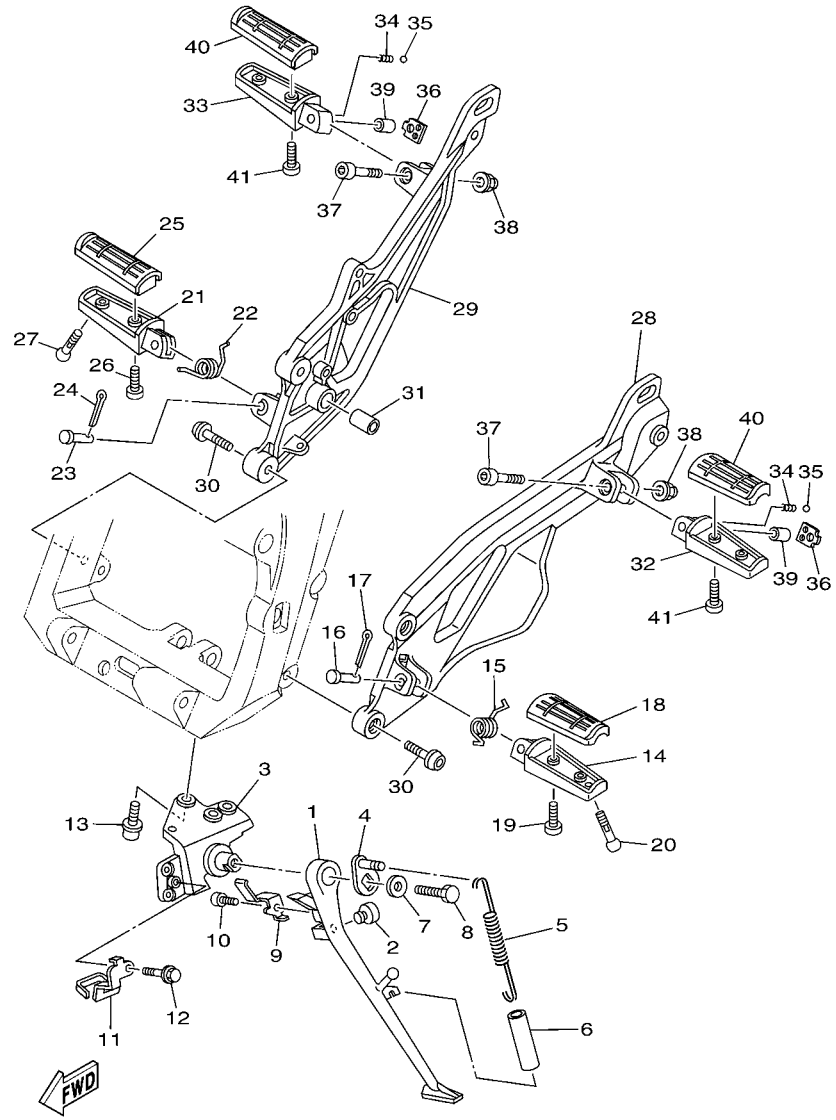

FIG. 34 SOPORTE & APOYAPIE

REF. Nº	CODIGO Nº	DESCRIPCION	5PSK					OBSERVACIONES
28	5PS–27442–00	SOPORTE 2	1					
29	5PS–27443–00	SOPORTE 3	1					
30	90110–08220	TORNILLO ALLEN	4					
31	90383–14001	BUJE	1					
32	5LV–27431–01	APOYAPIE POSTERIOR 1	1					
33	5LV–27441–01	APOYAPIE POSTERIOR 2	1					
34	90501–15001	RESORTE DE COMPRESION	2					
35	93501–04011	BOLA	2					
36	5JJ–27437–01	ARANDELA ESPECIAL	2					
37	91314–06040	TORNILLO ALLEN	2					
38	95604–06200	TUERCA DE AUTO-CIERRE	2					
39	90387–06014	ESPACIADOR	2					
40	3YX–27413–00	CUBIERTA DE APOYAPIE	2					
41	90157–05134	TORNILLO CABEZA CONICA PLANA	4					

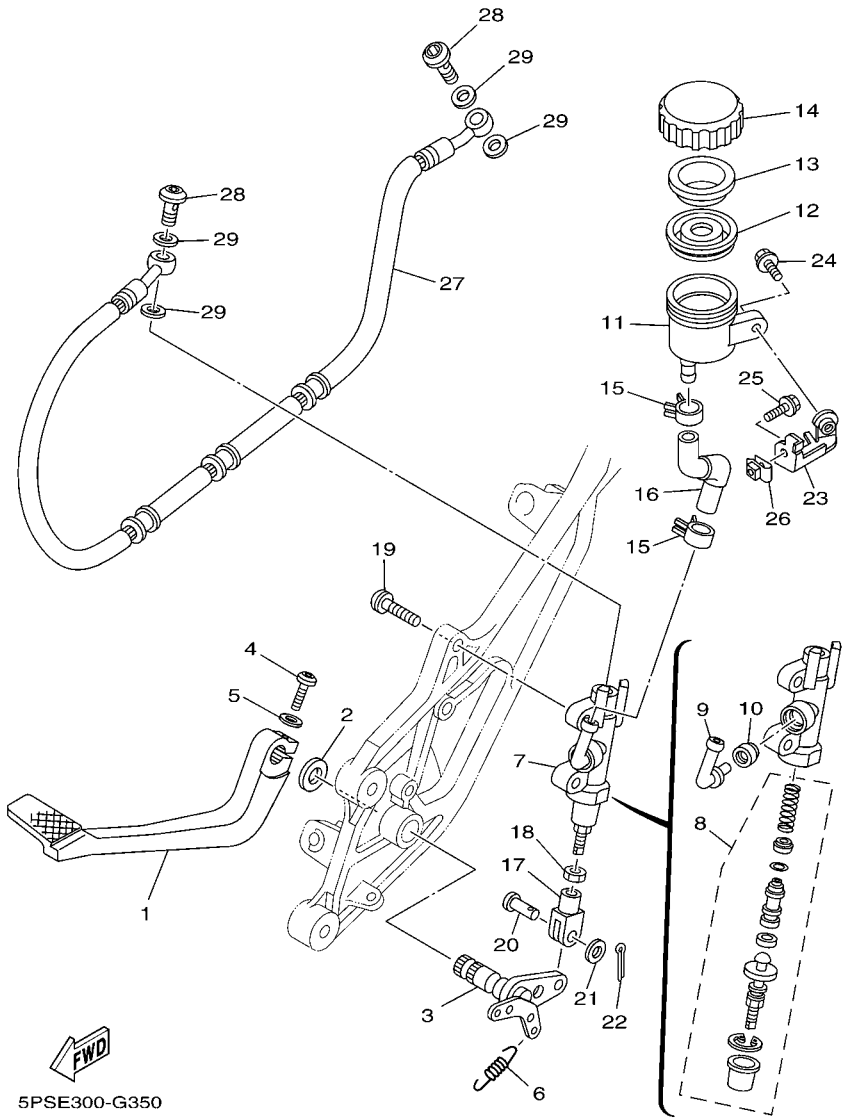

FIG. 35 CILINDRO MAESTRO TRASERO

REF. Nº	CODIGO Nº	DESCRIPCION	5PSK					OBSERVACIONES
1	5PS–27211–00	PEDAL DE FRENO	1					
2	90201–14215	ARANDELA PLANA	1					
3	5PS–27212–00	EJE DE PEDAL DE FRENO	1					
4	92014–06025	PERNO	1					
5	92990–06600	ARANDELA PLANA	1					
6	90506–20223	RESORTE DE TENSION	1					
7	5PS–2583V–00	CILINDRO, MAESTRO TRASERO	1					
8	5PS–W0042–50	.JUEGO DE CILINDRO MAESTRO	1					
9	5VX–2582A–00	.CONECTOR	1					
10	4BP–2585F–00	.BUJE	1					
11	5VS–25894–00	TANQUE DE RESERVA	1					
12	5SL–25854–00	DIAFRAGMA TANQUE RESERVA	1					
13	5SL–25855–00	BUJE DE DIAFRAGMA	1					
14	5SL–25852–00	TAPA DE TANQUE DE RESERVA	1					
15	90467–090A1	PRESILLA	2					
16	5PS–25895–10	MANGUERA DE TANQUE DE RESERVA	1					
17	47X–27222–00	UNION	1					
18	90170–08010	TUERCA	1					
19	92014–08030	PERNO	2					
20	90240–08013	PASADOR CON HOYO	1					
21	90201–08083	ARANDELA PLANA	1					
22	91401–20012	CHAVETA	1					
23	5PS–21228–00	SOPORTE, TANQUE DE RESERVA	1					
24	90119–06044	TORNILLO CON ARANDELA	1					
25	95807–06014	TORNILLO	1					
26	90183–06023	TUERCA DE RESORTE	1					
27	5PS–25874–10	MANGUERA DE FRENO	1					

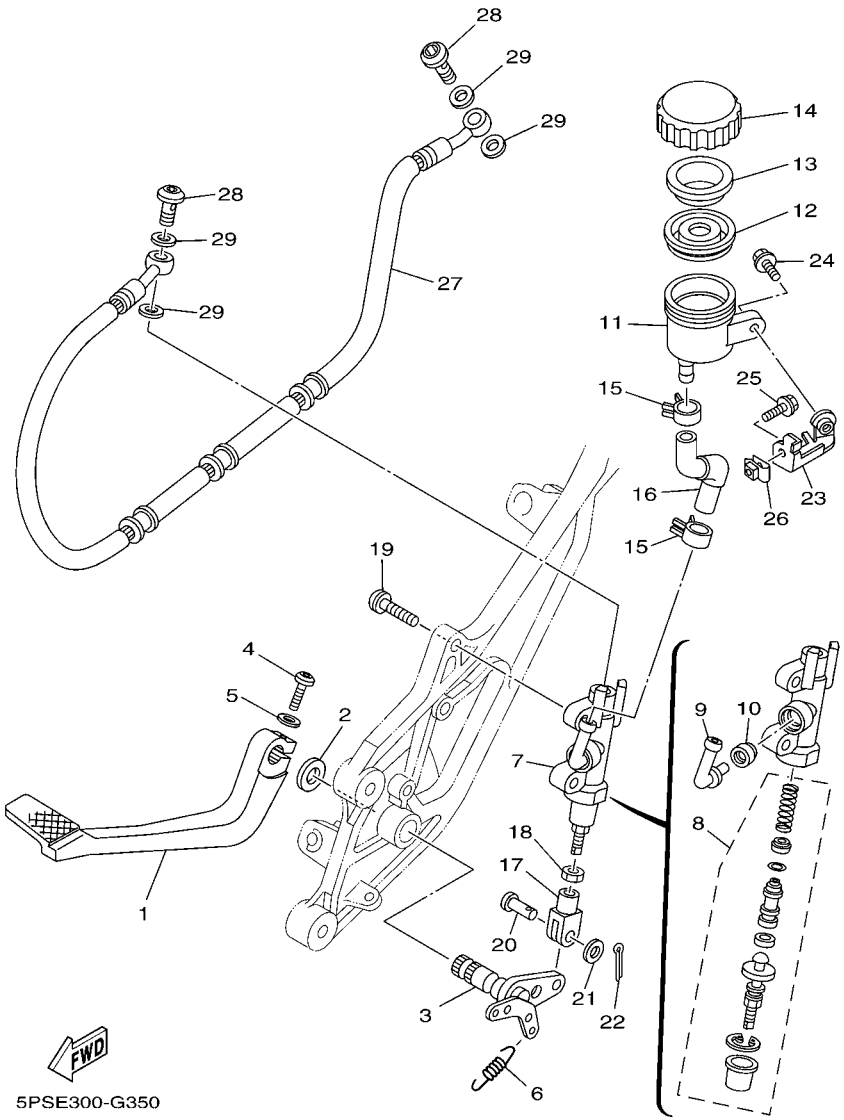

FIG. 35 CILINDRO MAESTRO TRASERO

REF. Nº	CODIGO Nº	DESCRIPCION	5PSK					OBSERVACIONES
28	90401–10020	PERNO DE UNION	2					
29	90430–10005	JUNTA	4					

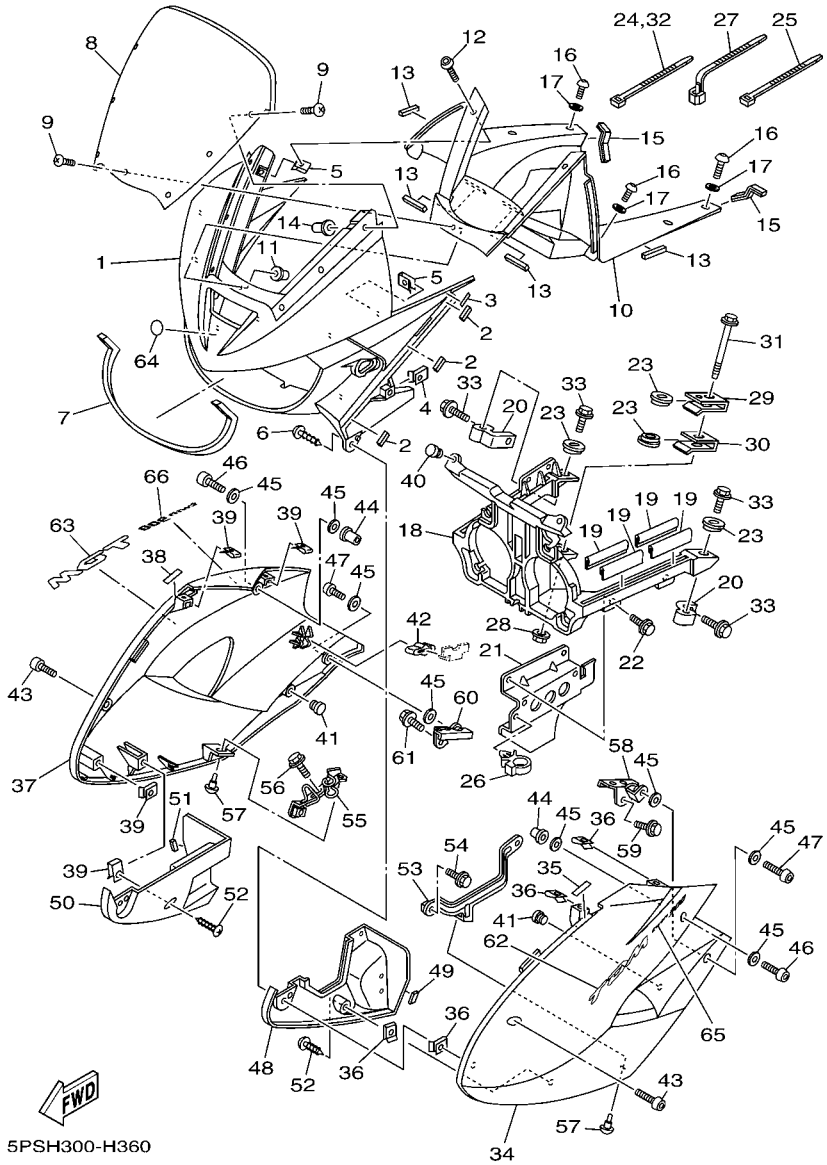

FIG. 36 BOVEDA 1

REF. Nº	CODIGO Nº	DESCRIPCION	5PSK					OBSERVACIONES
1	5PS–2835G–00–P4	CARROCERIA, DELANT. SUP. 1	1					UR PARA SMX
	5PS–2835G–00–7M	CARROCERIA, DELANT. SUP. 1	1					UR PARA MDS
2	4TX–21717–00	AMORTIGUADOR	6					
3	5PS–2178A–00	ETIQUETA DE ACEITE	2					
4	90183–05061	TUERCA DE RESORTE	2					
5	90183–05042	TUERCA DE RESORTE	4					
6	90167–05080	TORNILLO DE ROSCA HEMBRA	2					
7	5PS–84163–00	AMORTIGUADOR	1					
8	5PS–28381–01	PARABRISA	1					
9	90150–05024	TORNILLO CABEZA REDONDA	7					
10	5PS–2836K–00	PANEL 1	1					
11	90179–05523	TUERCA	1					
12	90167–05080	TORNILLO DE ROSCA HEMBRA	2					
13	5PS–28217–00	AMORTIGUADOR 1	4					
14	90179–05523	TUERCA	6					
15	5PS–28345–00	MOLDURA 1	2					
16	90167–05076	TORNILLO DE ROSCA HEMBRA	6					
17	90202–05224	ARANDELA DE PLANA	6					
18	5PS–28356–01	SOPORTE 1	1					
19	52W–2117G–00	PROTECTOR	4					
20	5PS–28332–00	SOPORTE PROTECTOR DE PATA	2					
21	5PS–28336–00	PLATO	1					
22	90119–06044	TORNILLO CON ARANDELA	2					
23	5PS–28373–00	COLLAR	4					
24	90465–10098	BRIDA	1					
25	90464–35132	BRIDA	1					
26	90464–07209	BRIDA	1					

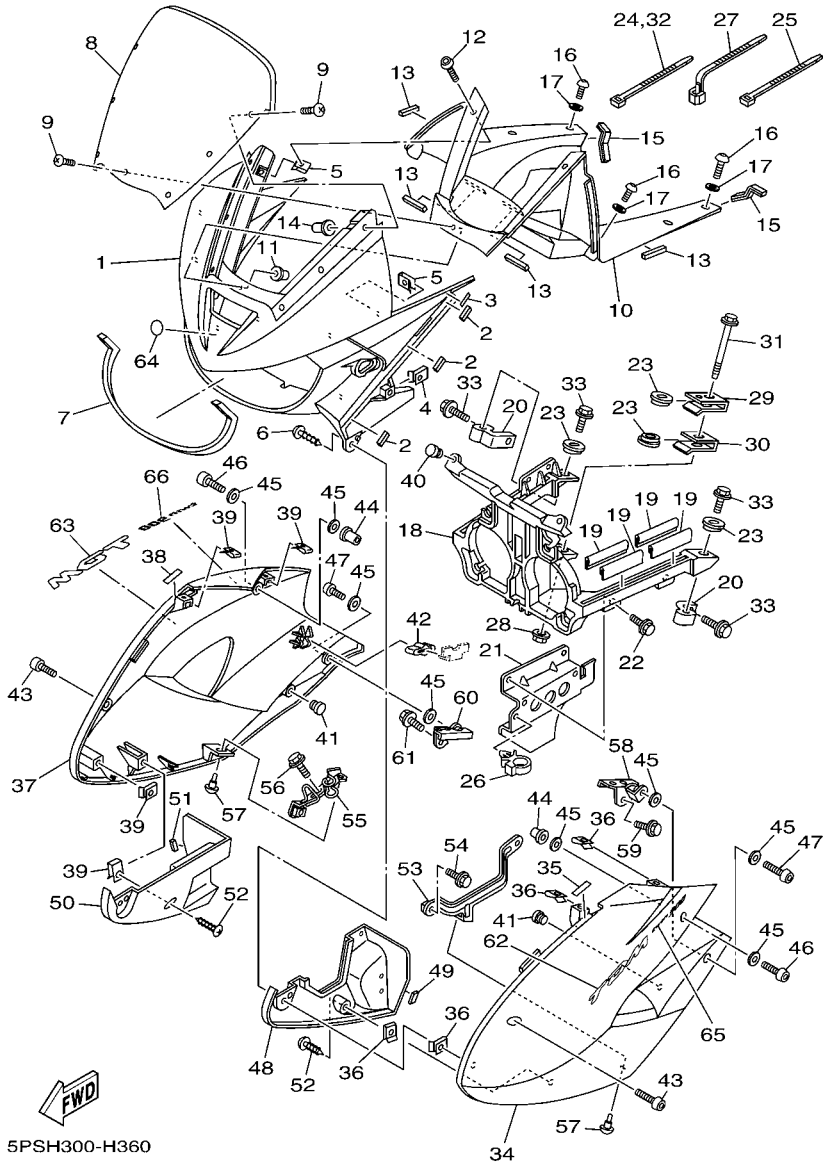

FIG. 36 BOVEDA 1

REF. Nº	CODIGO Nº	DESCRIPCION	5PSK					OBSERVACIONES
27	90464–15195	BRIDA	3					
28	95707–08500	TUERCA DE BRIDA	1					
29	5PS–28396–00	PLACA 1	1					
30	5PS–28397–00	PLACA 2	1					
31	5PS–28331–00	PERNO PROTECCION DE PATA	1					
32	90465–10098	BRIDA	1					
33	95817–08025	TORNILLO	4					
34	5PS–2835U–00–PA	PANEL 1	1					UR PARA SMX
	5PS–2835U–00–PE	PANEL 1	1					UR MNM1 PARA MDS
35	5PS–2178A–00	ETIQUETA DE ACEITE	1					
36	90183–05042	TUERCA DE RESORTE	4					
37	5PS–2835V–00–PA	PANEL 2	1					UR PARA SMX
	5PS–2835V–00–PE	PANEL 2	1					UR MNM1 PARA MDS
38	5PS–2178A–00	ETIQUETA DE ACEITE	1					
39	90183–05042	TUERCA DE RESORTE	4					
40	90338–10132	TAPON	2					
41	90338–11125	TAPON	2					
42	15A–21717–00	AMORTIGUADOR	2					
43	90110–05201	TORNILLO ALLEN	2					
44	90179–05523	TUERCA	2					
45	90202–05224	ARANDELA DE PLANA	8					
46	90149–05299	TORNILLO DE REGLAJE	2					
47	90110–05201	TORNILLO ALLEN	2					
48	5PS–2837N–01	REJILLA, ADMISION DE AIRE 1	1					
49	4TX–21717–00	AMORTIGUADOR	1					
50	5PS–2837R–00	REJILLA, ADMISION DE AIRE 2	1					
51	4TX–21717–00	AMORTIGUADOR	1					

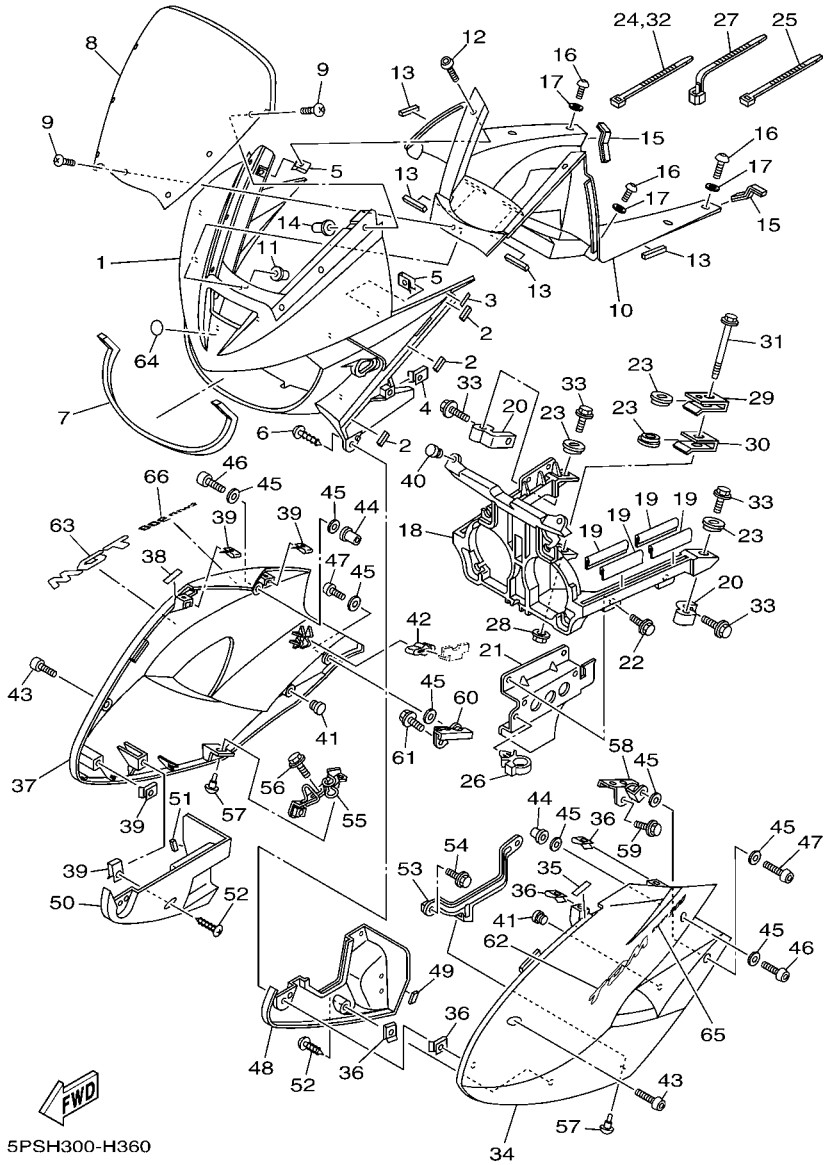

FIG. 36 BOVEDA 1

REF. Nº	CODIGO Nº	DESCRIPCION	5PSK					OBSERVACIONES
52	97707–50016	TORNILLO	2					
53	5PS–28321–00	SOPORTE	1					
54	95807–06020	TORNILLO	1					
55	5PS–28357–01	SOPORTE 2	1					
56	95807–06020	TORNILLO	2					
57	90269–07077	REMACHE	2					
58	5PS–2836A–00	SOPORTE 1	1					
59	95807–06012	TORNILLO	1					
60	5PS–2836E–00	SOPORTE 2	1					
61	95807–06012	TORNILLO	1					
62	5PS–2839B–00	EMBLEMA	1					
63	5PS–2839B–00	EMBLEMA	1					
64	5LV–2836B–01	MARCA	1					
65	5PS–28315–00	EMBLEMA	1					UR PARA SMX
	5PS–28315–30	EMBLEMA	1					UR PARA MDS
66	5PS–28315–00	EMBLEMA	1					UR PARA SMX
	5PS–28315–30	EMBLEMA	1					UR PARA MDS

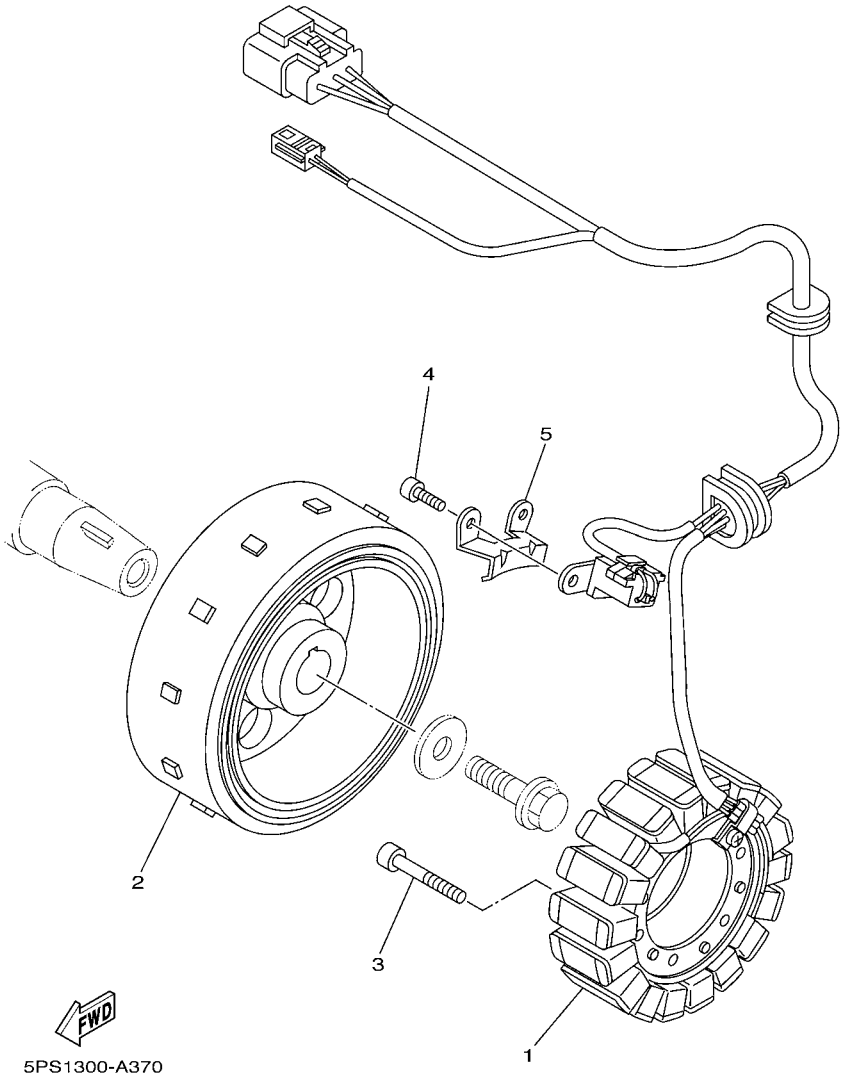

FIG. 37 GENERADOR

REF. Nº	CODIGO Nº	DESCRIPCION	5PSK					OBSERVACIONES
1	5PS–81410–00	ESTATOR COMPLETO	1					
2	5PS–81450–00	ROTOR COMPLETO	1					
3	90110–06042	TORNILLO ALLEN	3					
4	90110–05011	TORNILLO ALLEN	2					
5	90465–08380	BRIDA	1					

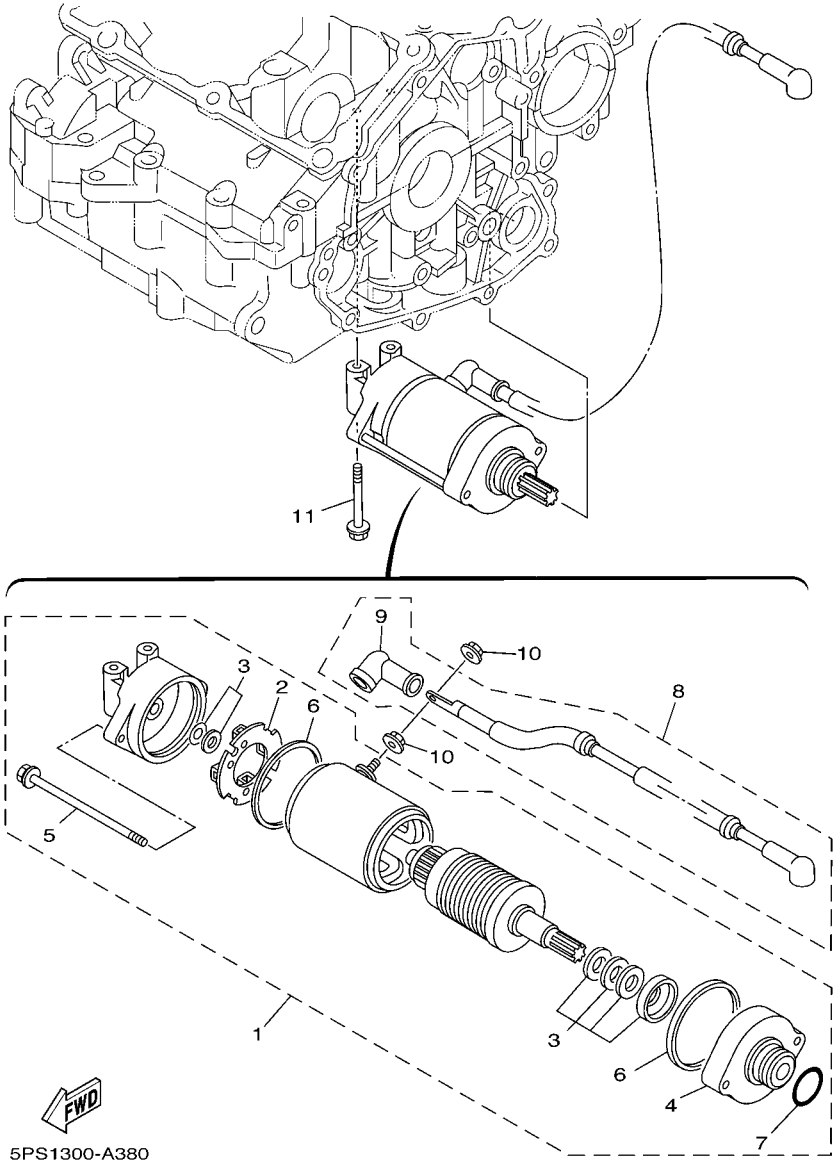

FIG. 38 MOTOR DE ARRANQUE

REF. Nº	CODIGO Nº	DESCRIPCION	5PSK					OBSERVACIONES
1	3LD–81890–00	MOTOR DE ARRANQUE COMPLETO	1					
2	3AJ–81801–00	.JUEGO DE ESCOBILLA	1					
3	3AJ–81809–00	.JUEGO DE ARANDELA	1					
4	3AJ–81830–00	.SOPORTE DELANTERO COMPLETO	1					
5	3AJ–81826–00	.PERNO	2					
6	11H–81844–00	.EMPAQUE	2					
7	1FK–81847–00	.ANILLO GOMA	1					
8	1HX–81815–00	CABLE, MOTOR DE ARRANQUE	1					
9	4G0–81871–00	.TAPA	1					
10	4XV–8182A–00	TUERCA	2					
11	95817–06050	TORNILLO	2					

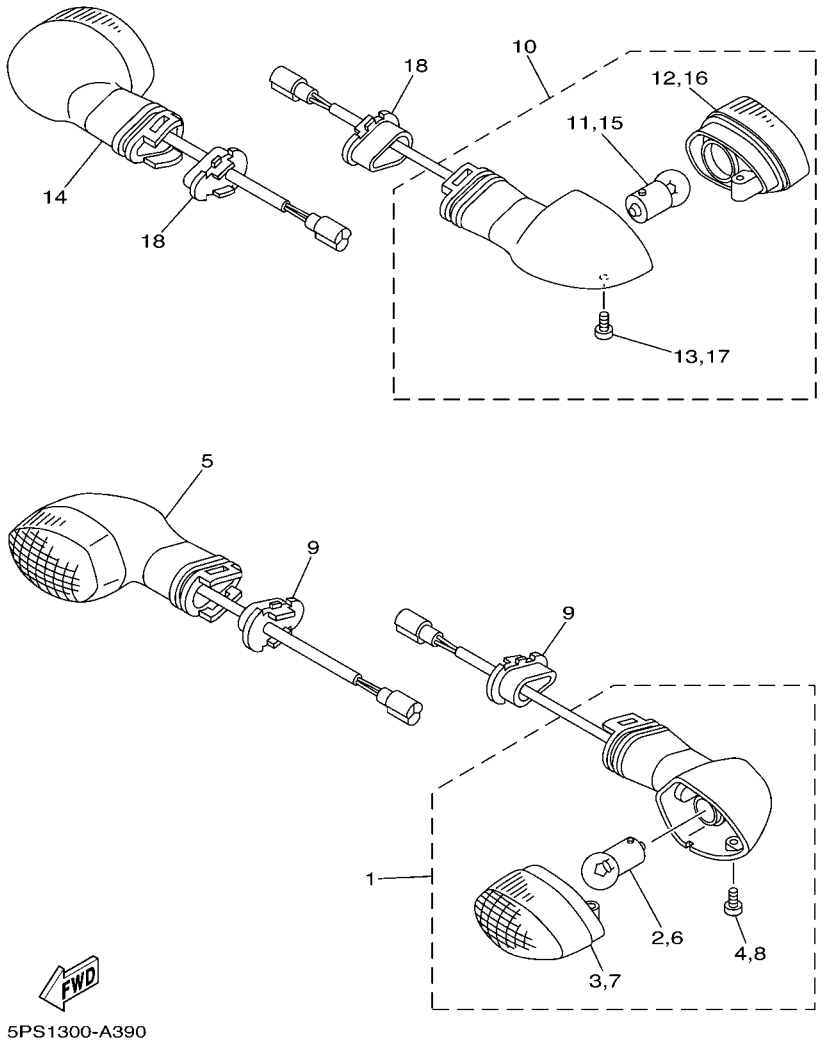

FIG. 39 LUZ DE DESTELLADOR

REF. Nº	CODIGO Nº	DESCRIPCION	5PSK					OBSERVACIONES
1	5PW–83310–01	DESTELLADOR DE LUZ DELANT.	1					
2	1KH–83311–00	.BOMBILLA (12V-10W)	1					
3	5PW–8333A–00	.LENTES COMPLETO 1	1					
4	97706–04012	.TORNILLO, ROSCA CHAPA	1					
5	5PW–83320–01	DESTELLADOR DE LUZ DELANT.	1					
6	1KH–83311–00	.BOMBILLA (12V-10W)	1					
7	5PW–8334A–00	.LENTES COMPLETO 2	1					
8	97706–04012	.TORNILLO, ROSCA CHAPA	1					
9	5PW–83318–00	SOPORTE DE DESTELLADOR 1	2					
10	5PS–83330–01	DESTELLADOR DE LUZ TRAS.COMPL.	1					
11	1KH–83311–00	.BOMBILLA (12V-10W)	1					
12	5PW–8334A–00	.LENTES COMPLETO 2	1					
13	97706–04012	.TORNILLO, ROSCA CHAPA	1					
14	5PS–83340–01	DESTELLADOR DE LUZ TRAS.COMPL.	1					
15	1KH–83311–00	.BOMBILLA (12V-10W)	1					
16	5PW–8333A–00	.LENTES COMPLETO 1	1					
17	97706–04012	.TORNILLO, ROSCA CHAPA	1					
18	5PW–83318–00	SOPORTE DE DESTELLADOR 1	2					

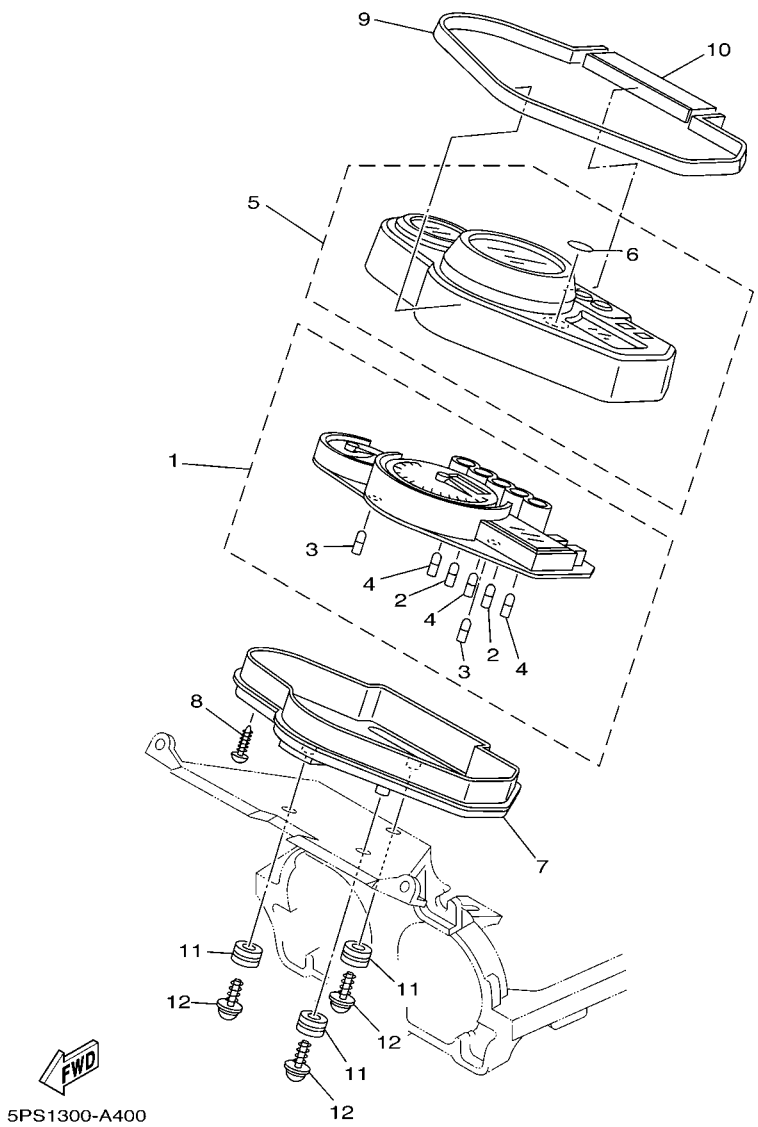

FIG. 40 MEDIDOR

REF. Nº	CODIGO Nº	DESCRIPCION	5PSK					OBSERVACIONES
1	5PS–83570–60	VELOCIMETRO COMPLETO (KM/H)	1					
2	4YR–83517–00	.AMPOLLETA (12V-1.4W T5)	2					
3	4YR–83517–10	.AMPOLLETA (12V-2W T5)	2					
4	5PS–83517–00	.AMPOLLETA (12V-1.2W T5)	3					
5	5PS–8353E–01	CAJA DE MEDIDOR SUPERIOR	1					
6	5GT–2836B–00	.MARCA	1					
7	5PS–83572–00	CAJA DE VELOCIMETRO INFERIOR	1					
8	97707–40016	TORNILLO ROSCA HEMBRA	8					
9	5PS–83523–00	AMORTIGUADOR	1					
10	5PS–83541–00	AMORTIGUADOR	1					
11	5PS–83513–00	AMORTIGUADOR	3					
12	90164–05014	TORNILLO ROSCA HEMBRA	3					

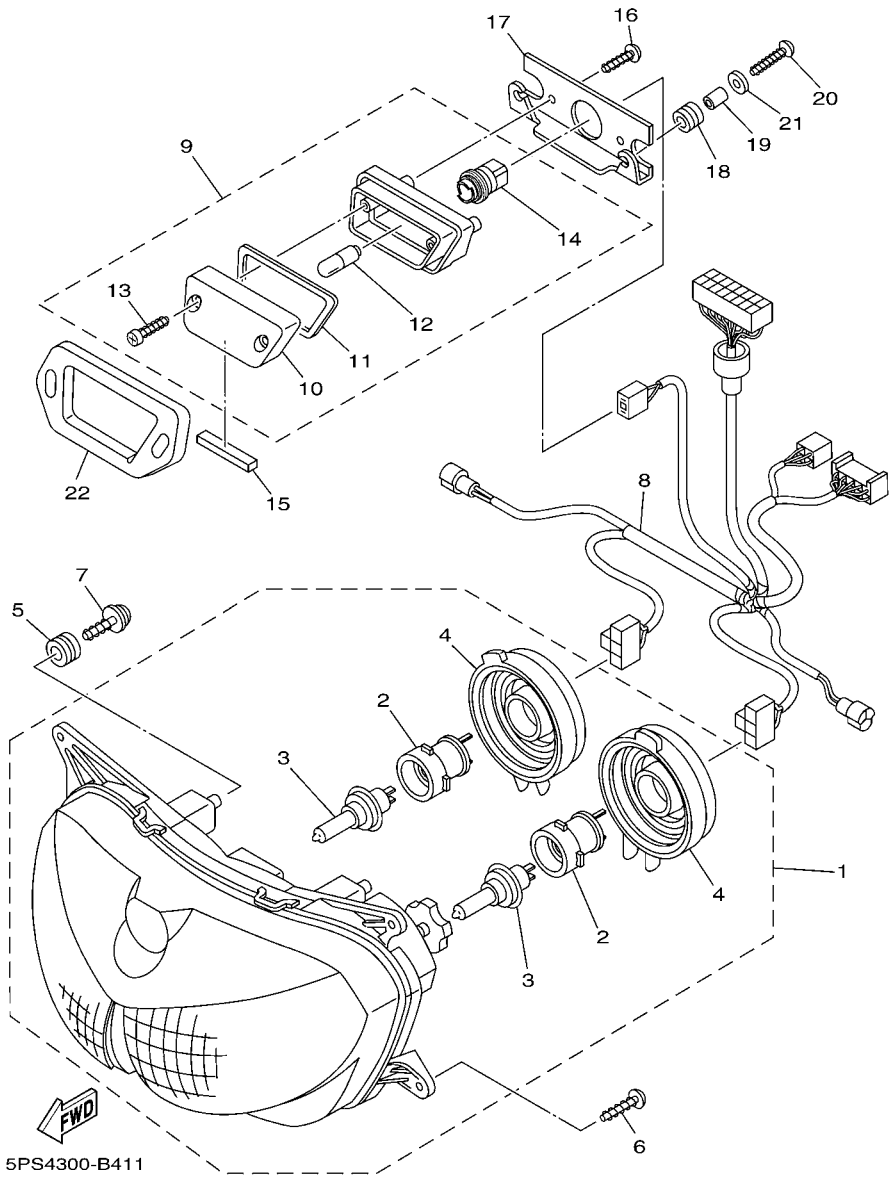

FIG. 41 FARO DELANTERO

REF. Nº	CODIGO Nº	DESCRIPCION	5PSK					OBSERVACIONES
1	5PS–84310–00	UNIDAD DE FARO DELANTERO COMPL	1					
2	5PS–8411W–00	.ENCASTRE	2					
3	*	.BOMBILLA (12V-55W H7)	2					LM HALOGEN
4	4TV–84397–00	.CUBIERTA DE ENCASTRE	2					
5	5PS–83513–00	AMORTIGUADOR	4					
6	97707–50016	TORNILLO	4					
7	90164–05014	TORNILLO ROSCA HEMBRA	4					
8	5PS–84359–10	CABLE DE FARO DELANTERO	1					
9	3GM–84301–01	LUZ PILOTO COMPLETA 1	1					
10	3GM–84321–00	.LENTE COMPLETO	1					
11	3GM–84322–00	.EMPAQUETADURA DE LENTES	1					
12	47G–85353–00	.BOMBILLA(12V-5W)	1					
13	3GM–84192–10	.TORNILLO, ESPECIAL	2					
14	3GM–84346–00	.ENCASTRE DE LUZ PILOTO	1					
15	4XV–2834E–00	AMORTIGUADOR 3	1					
16	90167–05025	TORNILLO DE ROSCA HEMBRA	2					
17	4TX–8431R–00	SOPORTE	1					
18	90480–10517	TAPON	2					
19	90387–052U5	ESPACIADOR	2					
20	90167–05037	TORNILLO DE ROSCA HEMBRA	2					
21	90201–054K4	ARANDELA PLANA	2					
22	3GM–84367–50	AMORTIGUADOR FARO DELANTERO 2	1					

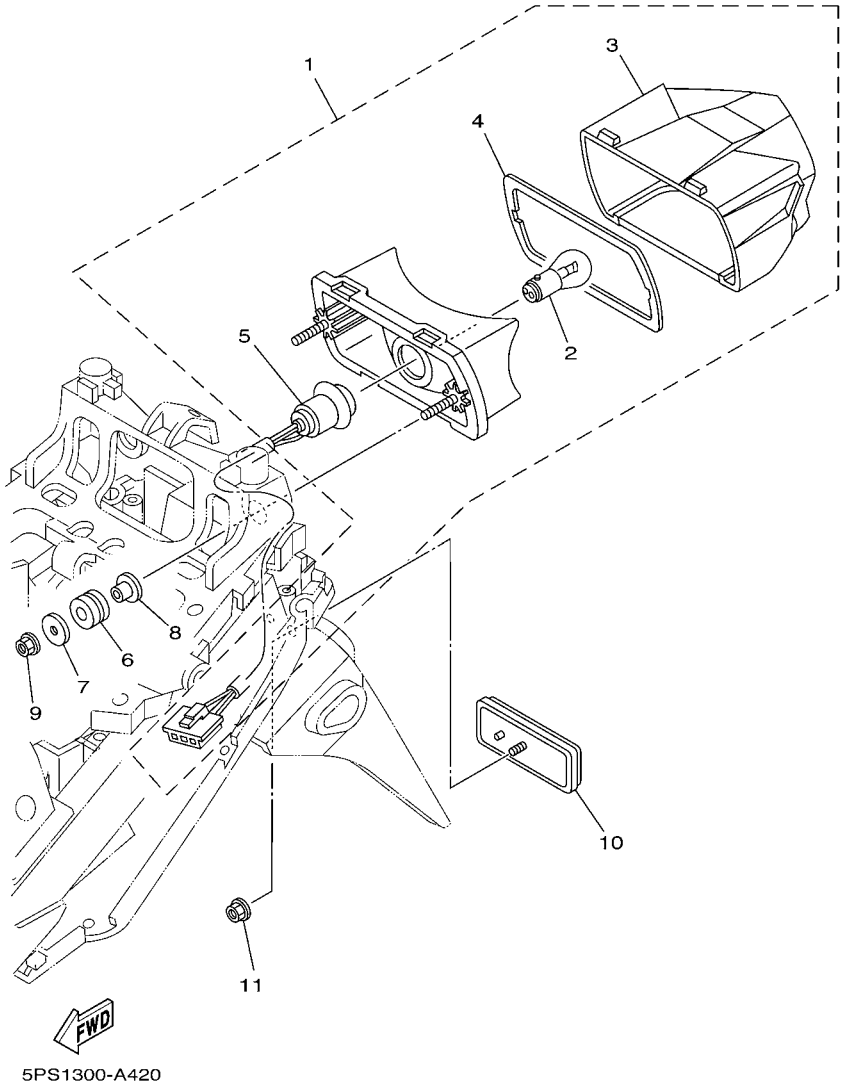

FIG. 42 LUZ DE COLA

REF. Nº	CODIGO Nº	DESCRIPCION	5PSK					OBSERVACIONES
1	5PS–84710–00	UNIDAD FARO TRASERO COMPL.	1					
2	1A2–84714–41	.AMPOLLETA (12V-21/5W)	1					
3	5PS–84721–00	.LENTE DE FARO TRASERO	1					
4	47X–84723–00	.EMPAQUE LENTE FARO TRASERO	1					
5	5PS–84735–00	.CABLE COMPLETA	1					
6	90480–14323	TAPON	2					
7	90201–06071	ARANDELA PLANA	2					
8	90387–066Y6	ESPACIADOR	2					
9	95307–06600	TUERCA	2					
10	3Y6–85130–02	REFLECTOR TRASERO COMPLETO	1					
11	95707–05500	TUERCA DE BRIDA	1					

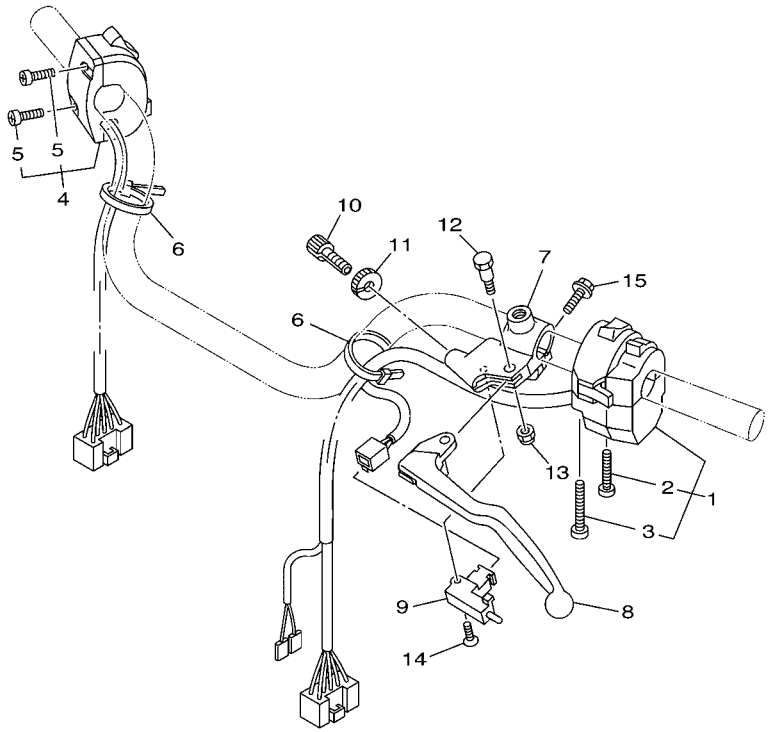

5PS6300-C430

FIG. 43 INTERRUPTOR DE MANILLAR&PALANC

REF. Nº	CODIGO Nº	DESCRIPCION	5PSK					OBSERVACIONES
1	5PS–83969–10	INTERRUPTOR DE MANIJA 5	1					
2	98507–05030	.TORNILLO DE CABEZA PLANA	1					
3	98507–05040	.TORNILLO DE CABEZA PLANA	1					
4	5RT–83975–00	INTERRUPTOR DE MANIJA 2	1					
5	98507–05022	.TORNILLO DE CABEZA PLANA	2					
6	437–83936–01	BANDA DE CABLE DE INTERRUPTOR	2					
7	3YX–82911–01	SOPORTE DE LEVA 1	1					
8	3YX–83912–11	PALANCA 1	1					
9	3YX–82917–01	INTERRUPTOR	1					
10	90123–08096	PERNO	1					
11	90179–08148	TUERCA	1					
12	3YX–83945–00	PERNO DE PALANCA	1					
13	95607–06100	TUERCA AUTOBLOCANTE	1					
14	98707–03020	TORNILLO DE CABEZA PLANA	1					
15	95027–06020	PERNO, DE BRIDA	1					

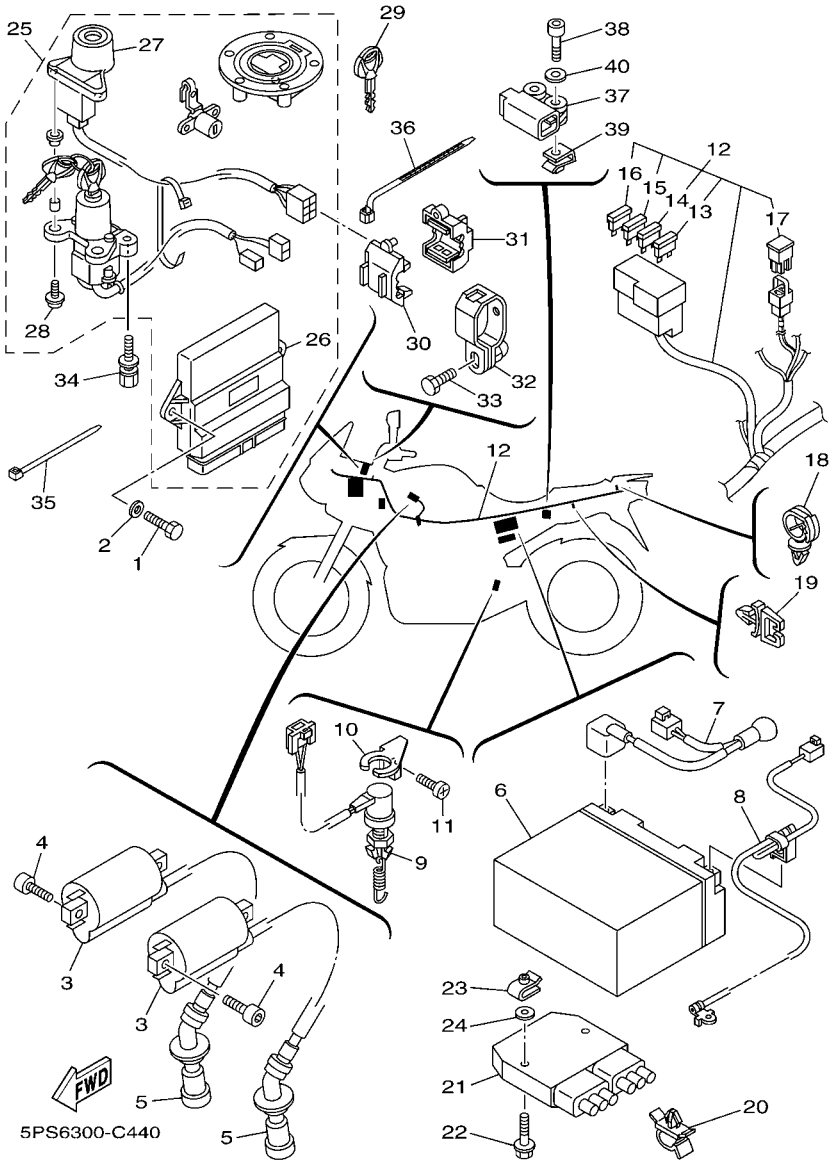

FIG. 44 EQUIPO ELECTRICO 1

REF. Nº	CODIGO Nº	DESCRIPCION	5PSK					OBSERVACIONES
1	97024–06016	PERNO	2					
2	92904–06600	ARANDELA	2					
3	2UJ–82310–01	BOBINA DE ENCENDIDO COMPLETA	2					
4	91317–05016	PERNO	4					
5	5JW–82370–00	TAPON DE BUJIA COMPLT	2					
6	4TX–82100–02	BATERIA COMPLETA (GS GT12B-4)	1					
7	5PS–82115–00	CABLE CONDUCTOR POSITIVO	1					
8	5PS–82116–00	CABLE CONDUCTOR NEGATIVO	1					
9	5PS–82530–00	INTERRUPTOR DE PARADA COMPLETO	1					
10	5PS–2144G–00	SOPORTE DE INTERRUPTOR	1					
11	98507–06008	TORNILLO DE CABEZA PLANA	1					
12	5PS–82590–41	CONJUNTO DE CABLES	1					
13	5JJ–82151–30	.FUSIBLE (10A-BL)	4					
14	5JJ–82151–10	.FUSIBLE (15A-BL)	2					
15	5JJ–82151–20	.FUSIBLE (20A-BL)	2					
16	5JJ–82151–90	.FUSIBLE (5A-BL)	2					
17	5PS–82151–00	.FUSIBLE (40A)	1					
18	90464–13249	BRIDA	1					
19	90464–07M56	BRIDA	1					
20	90464–14001	BRIDA	1					
21	5JW–81960–00	RECTIFICADOR Y REGULADOR	1					
22	95807–06030	TORNILLO	2					
23	90183–06053	TUERCA DE RESORTE	2					
24	90202–05187	ARANDELA DE PLANA	2					
25	2B0–W8250–10	JUEGO DE INMOVILIZADOR	1					
26	2B0–8591A–10	.UNIDAD CONTROL	1					
27	5VS–8255P–00	.UNIDAD INMOVILIZADORA	1					

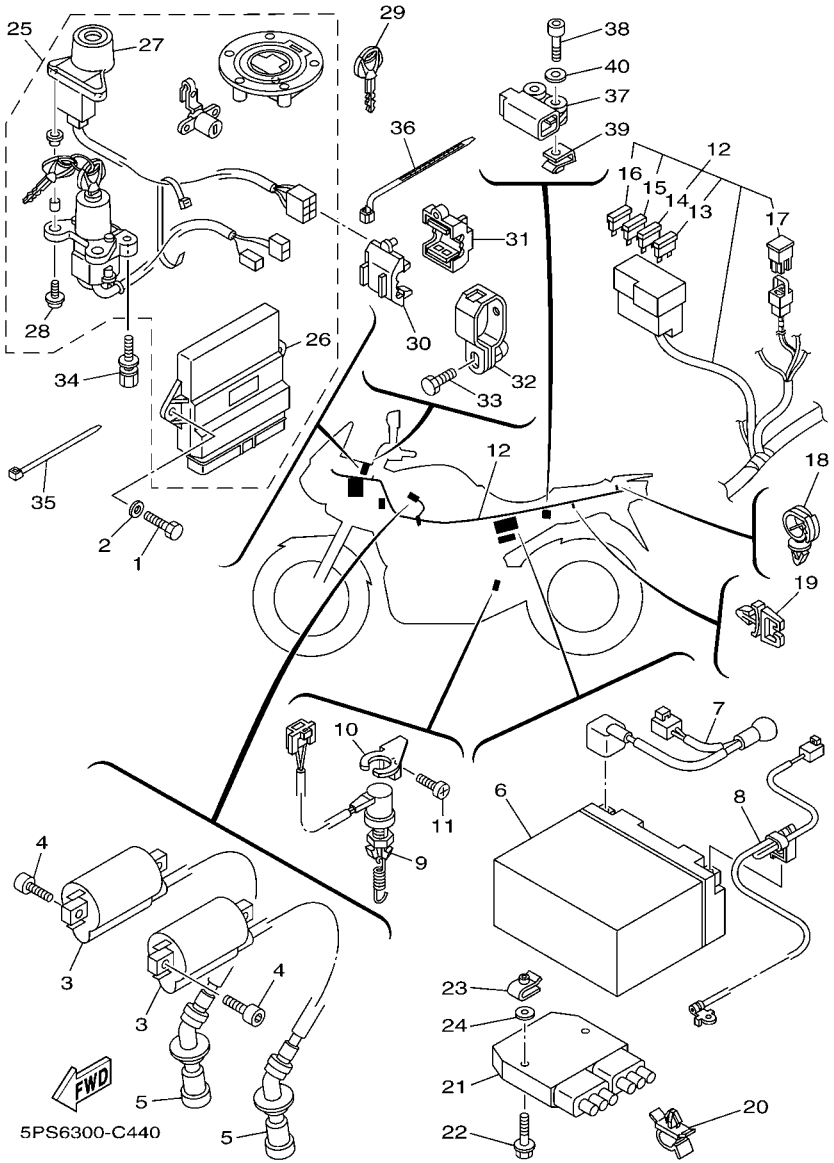

FIG. 44 EQUIPO ELECTRICO 1

REF. Nº	CODIGO Nº	DESCRIPCION	5PSK					OBSERVACIONES
28	5SL–82113–01	.TORNILLO	2					
29	5SL–82511–08	BLANK KEY	1					AP
30	5VS–8258J–00	CAJA DE CONECTOR 1	1					
31	5VS–8259J–00	CAJA DE CONECTOR 2	1					
32	5VS–82729–00	SOPORTE DE CIERRE	1					
33	90101–06664	TORNILLO	1					
34	90109–080G5	PERNO	2					
35	90465–10098	BRIDA	1					
36	90464–25003	BRIDA	1					
37	5PS–82576–01	SENSOR ANGULO DE INCLINATION	1					
38	91317–04025	PERNO	2					
39	90183–04039	TUERCA DE RESORTE	2					
40	90201–047A2	ARANDELA PLANA	2					

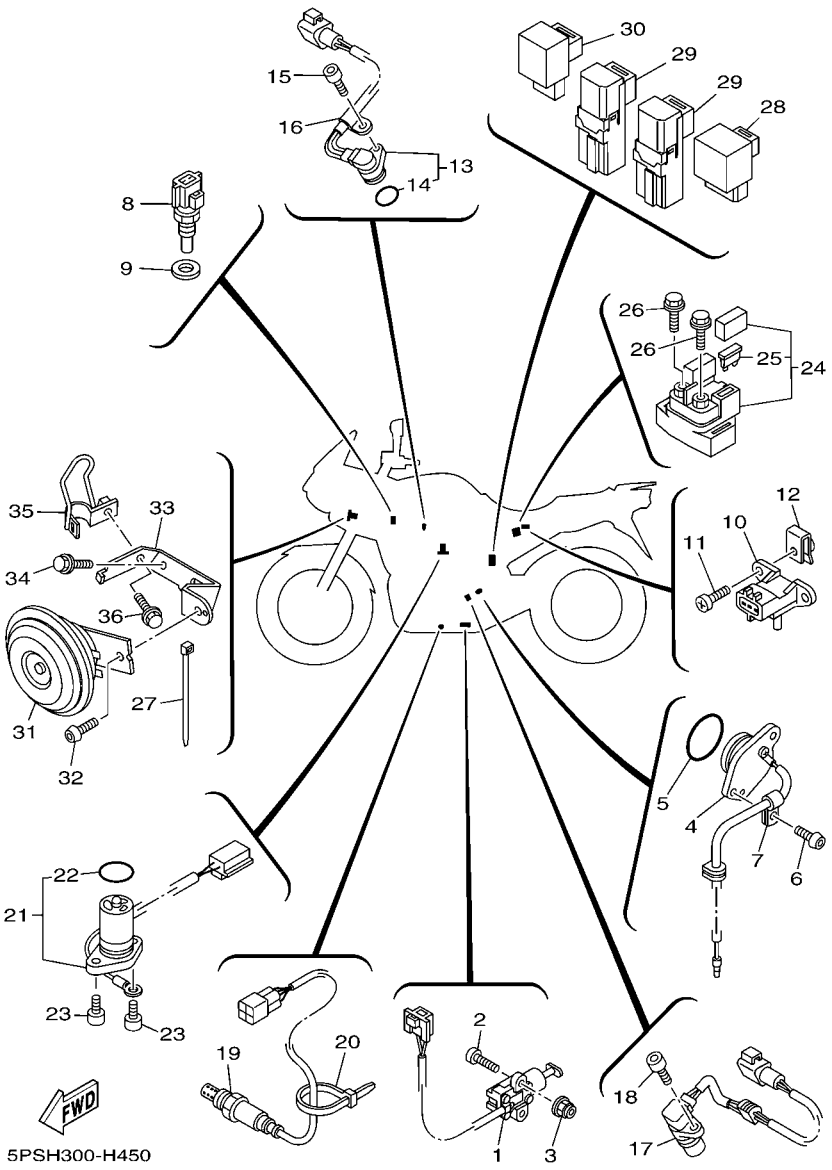

FIG. 45 EQUIPO ELECTRICO 2

REF. Nº	CODIGO Nº	DESCRIPCION	5PSK					OBSERVACIONES
1	5RT–82566–61	INTERRUPTOR	1					
2	98507–05020	TORNILLO DE CABEZA PLANA	2					
3	95607–05200	TUERCA DE AUTO-CIERRE	2					
4	5PS–82540–00	INTERRUPTOR NEUTRAL COMPL	1					
5	93210–29196	ANILLO O	1					
6	90149–06018	TORNILLO DE REGLAJE	2					
7	90462–08017	BRIDA	1					
8	5PS–85790–00	TERMICA SENSORIO	1					
9	90430–12202	JUNTA	1					
10	1C7–82380–00	SENSOR DE PRESION	1					
11	95027–06014	PERNO, DE BRIDA	2					
12	90183–06053	TUERCA DE RESORTE	2					
13	5PS–85896–10	SENSOR DE LEVA	1					
14	4D9–81168–00	.ANILLO O	1					
15	90110–06124	TORNILLO ALLEN	1					
16	90465–08028	BRIDA	1					
17	5PS–83755–01	SENSOR DE VELOCIDAD	1					
18	91317–06010	PERNO	1					
19	5PS–8592A–10	SENSOR	1					
20	1UA–82591–00	BANDA	1					
21	5PS–85720–00	MEDIDOR DE NIVEL DE ACEITE	1					
22	4XV–8A8E0–00	.ANILLO O	1					
23	91317–06012	PERNO	2					
24	3EL–81940–12	CONJUNTO ARRANCADOR RELEVO	1					
25	42X–82151–00	.FUSIBLE (10A-BL)	2					
26	95027–06008	PERNO, DE BRIDA	2					
27	1UA–82591–00	BANDA	2					

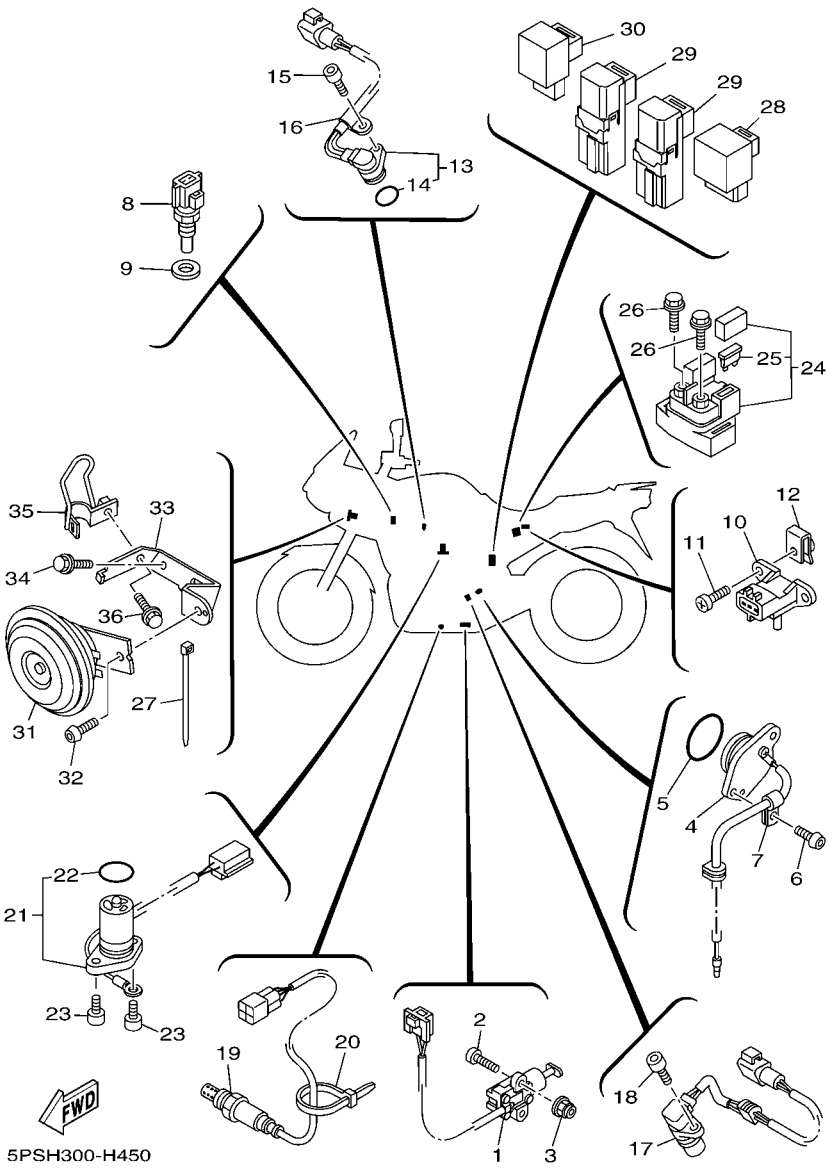

FIG. 45 EQUIPO ELECTRICO 2

REF. Nº	CODIGO Nº	DESCRIPCION	5PSK					OBSERVACIONES
28	5PX–81950–00	RELE COMPLETO	1					
29	5EA–81950–20	RELE COMPLETO	2					
30	3XV–83350–21	RELE DE DESTELLADOR COMPL.	1					
31	5PS–83371–00	BOCINA	1					
32	92017–06010	PERNO	1					
33	5PS–2317E–00	SOPORTE 1	1					
34	95027–06010	PERNO, DE BRIDA	2					
35	5PS–23378–20	SOPORTE DE BOCINA	1					
36	95827–06010	TORNILLO	1					

CODIGO Nº	REF. Nº
5PS–11101–10	1 – 1
4KG–1111G–00	1 – 29
583–11126–00	13 – 36
3LD–11133–10	1 – 2
3LD–11134–10	1 – 3
5PS–11165–00	1 – 18
5PS–11166–10	9 – 37
5PS–11169–00	1 – 19
5PS–11181–00	1 – 16
5PS–11190–10	1 – 17
5PS–11193–00	1 – 25
214–11198–01	8 – 46
5PS–11311–10	2 – 1
5PS–11351–00	2 – 2
3LD–11361–00	12 – 6
5PS–11400–00	3 – 1
3LD–11416–00	3 – 2
3LD–11416–10	3 – 2
3LD–11416–20	3 – 2
3LD–11416–30	3 – 2
3LD–11416–40	3 – 2
3LD–11416–50	3 – 2
3LD–11416–60	3 – 2
4NX–11500–01	3 – 11
4NX–11510–01	3 – 12
3LD–11583–00	3 – 13
3LD–11584–00	3 – 14
5BE–11603–00	3 – 4
5PS–11631–00	3 – 3
5PS–11633–00	3 – 5
5PS–11650–00	3 – 7
3LD–11654–00	3 – 8
3LD–11656–00	3 – 10
3LD–11656–10	3 – 10
3LD–11656–20	3 – 10
3LD–11656–30	3 – 10
3LD–12111–02	4 – 1
3LD–12112–02	4 – 2
3LD–12113–00	4 – 5
1WG–12116–00	4 – 4
3LD–12117–00	4 – 6
3LD–12118–00	4 – 7
51Y–12119–00	4 – 8
5PS–12121–00	4 – 3
1WG–12153–21	4 – 9
1WG–12153–31	4 – 9
3LD–12168–00	4 – 10
3LD–12168–20	4 – 10

CODIGO Nº	REF. Nº
3LD–12168–40	4 – 10
3LD–12168–60	4 – 10
3LD–12168–80	4 – 10
3LD–12168–A0	4 – 10
3LD–12168–F0	4 – 10
3LD–12168–H1	4 – 10
3LD–12168–K1	4 – 10
3LD–12168–M1	4 – 10
3LD–12168–R1	4 – 10
3LD–12168–U1	4 – 10
3LD–12168–W1	4 – 10
3LD–12168–Y1	4 – 10
3LD–12169–11	4 – 10
3LD–12169–31	4 – 10
3LD–12169–50	4 – 10
3LD–12169–70	4 – 10
3LD–12169–90	4 – 10
3LD–12169–E0	4 – 10
3LD–12169–G0	4 – 10
3LD–12169–J0	4 – 10
3LD–12169–L0	4 – 10
3LD–12169–N0	4 – 10
3LD–12169–T0	4 – 10
5PS–12171–00	5 – 1
3LD–12176–00	5 – 3
5PS–12180–00	5 – 2
5PS–12210–20	5 – 6
5JW–12213–00	5 – 7
5BE–12241–00	5 – 12
3LD–12247–00	5 – 11
3LD–12251–00	5 – 9
5PS–12252–00	5 – 10
5PS–12405–00	7 – 2
1AE–12410–00	7 – 28
4NX–12413–00	7 – 30
5PS–12417–00	7 – 29
5PS–12420–10	6 – 1
1UF–12435–00	7 – 13
1KT–12437–00	7 – 6
3LD–12439–00	6 – 2
5PS–1243A–00	10 – 15
5PS–1243E–00	10 – 12
5PS–1244E–00	7 – 34
5PS–1244F–00	7 – 36
3VD–12459–00	6 – 8
5PS–12461–00	7 – 1
4FL–12462–00	7 – 5
5PS–12465–00	7 – 22

CODIGO Nº	REF. Nº
5PS–12467–00	7 – 12
5PS–12469–10	6 – 16
3LD–12481–00	6 – 13
4NX–12482–00	7 – 23
5Y9–12491–00	9 – 28
	10 – 2
1AA–12535–00	7 – 4
5PS–12576–00	7 – 26
5PS–12578–00	7 – 10
5PS–12579–00	7 – 37
5PS–12881–00	10 – 17
3LD–13113–00	8 – 29
3LD–13151–00	8 – 36
5PS–13161–00	8 – 25
3LD–13300–00	8 – 1
4NX–13303–00	8 – 7
5PS–13317–00	8 – 56
3VD–13325–00	8 – 11
5PS–13329–00	8 – 3
3LD–13339–00	8 – 9
3LD–13371–00	8 – 8
5PS–13411–00	8 – 17
3VD–13412–00	8 – 13
5PS–13414–02	8 – 40
3VD–13415–00	8 – 16
3VD–13416–00	8 – 52
5PS–13417–10	8 – 28
5JX–13440–00	8 – 19
5PS–13447–10	8 – 20
5PS–13464–00	8 – 47
5PS–13465–00	8 – 50
11H–13490–00	8 – 34
5PS–13586–00	9 – 1
5PS–13750–30	10 – 1
5PS–13761–00	10 – 19
5PS–13906–00	10 – 14
5PS–13907–02	26 – 10
5PS–13938–00	10 – 10
5PS–13971–00	26 – 1
5PS–13972–00	26 – 4
5PS–14103–00	10 – 31
5JW–14104–00	10 – 32
5PS–1410H–00	9 – 17
5PS–14148–00	9 – 19
8CC–14216–10	10 – 7
5PS–14264–00	9 – 15
5FL–14348–00	10 – 30
5FL–14348–10	10 – 29

CODIGO Nº	REF. Nº
5PS–14349–01	10 – 25
5PS–14411–00	9 – 6
5PS–14414–00	9 – 4
5PS–14419–00	9 – 16
5PS–14421–00	9 – 7
5PS–14435–00	9 – 14
5PS–1443E–00	9 – 33
5PS–14451–00	9 – 8
5PS–14452–00	9 – 9
5PS–14453–00	9 – 10
5PS–14463–00	9 – 11
5PS–1446E–00	9 – 22
5PS–14545–00	9 – 12
5PS–14552–00	9 – 20
5PS–14568–00	9 – 31
5JW–14589–00	10 – 3
5PS–14610–10	11 – 1
3VD–14613–01	11 – 5
5PS–14628–00	11 – 3
2B0–14710–00	11 – 9
5PS–14715–00	11 – 12
2B0–14720–00	11 – 15
5PS–14725–00	11 – 18
2B0–14738–00	11 – 13
2B0–14748–00	11 – 19
5PX–14755–00	11 – 10
	11 – 16
5PS–1482K–00	1 – 22
5PS–14834–00	9 – 43
5PS–14840–00	9 – 42
5PS–14881–00	9 – 40
5PS–14882–10	9 – 45
5PS–14890–00	1 – 23
5PS–14899–00	1 – 21
5DM–14936–00	10 – 4
5PS–14987–00	10 – 26
5PS–14996–00	10 – 20
5PS–15100–10	12 – 1
3LD–15118–00	12 – 28
4G0–15138–00	12 – 3
4H7–15138–00	8 – 39
4XV–15138–00	12 – 2
5PS–15163–00	16 – 3
3LD–15191–00	12 – 26
5PS–15316–00	13 – 26
5PS–15326–00	13 – 20
5PS–15335–00	13 – 21
5PS–15337–00	13 – 22

CODIGO Nº	REF. Nº
5PS–15411–10	13 – 1
5PS–15416–10	12 – 32
5PS–15419–00	13 – 14
5PS–1541E–00	13 – 9
5PS–15420–10	13 – 19
5PS–15425–10	13 – 34
5PS–15427–00	13 – 27
5PS–15431–10	13 – 25
5PS–15441–00	13 – 33
5PS–15451–02	13 – 4
5PS–15456–02	12 – 33
5PS–15462–02	13 – 29
5PS–15463–02	13 – 35
3LD–15512–00	14 – 4
5PS–15515–00	14 – 1
3LD–15517–00	14 – 2
26H–15521–00	14 – 3
3LD–15590–02	14 – 5
4TX–16150–02	15 – 1
3VD–16154–00	15 – 28
4H7–16154–00	15 – 4
3VD–16164–00	15 – 27
4NX–16181–00	15 – 29
4TX–16321–00	15 – 7
4H7–16321–02	15 – 6
168–16324–00	15 – 11
	15 – 12
3J2–16324–00	15 – 11
	15 – 12
	15 – 13
168–16325–00	15 – 11
5PS–16340–00	15 – 16
5EB–16351–01	15 – 8
5PS–16356–00	15 – 2
4TX–16371–00	15 – 5
5PS–16382–00	15 – 18
5PS–17121–00	16 – 13
5PS–17131–00	16 – 8
5PS–17151–00	16 – 5
5PS–17161–00	16 – 10
5PS–17211–00	16 – 31
5PS–17221–00	16 – 18
5PS–17231–00	16 – 27
5PS–17241–00	16 – 24
5PS–17251–00	16 – 28
5PS–17261–00	16 – 21
5PS–17401–00	16 – 1
5PS–17402–00	16 – 16

CODIGO Nº	REF. Nº
278–17424–01	16 – 37
5PS–17446–00	16 – 42
5PS–17460–00	16 – 33
5PS–17471–00	16 – 40
5PS–17653–00	13 – 6
5PS–18101–00	18 – 1
5PS–18110–00	18 – 13
5EB–18113–00	18 – 14
2H9–18115–00	18 – 10
5PS–18116–00	18 – 16
1D7–18127–00	18 – 21
5PS–18130–00	18 – 7
4SV–18140–00	17 – 15
2H9–18154–00	18 – 8
	18 – 15
4NX–18175–00	17 – 17
5PS–18511–00	17 – 7
5PS–18512–00	17 – 8
5PS–18513–00	17 – 9
4XV–18531–00	17 – 11
5PS–18531–00	17 – 10
3LD–18536–00	17 – 13
5PS–18540–00	17 – 1
4UN–18542–00	17 – 3
4UN–18566–00	17 – 5
5PS–21110–20	19 – 1
5PS–2117E–00	20 – 43
1B3–2117G–00	19 – 28
52W–2117G–00	36 – 19
5PS–2117K–00	27 – 14
5PS–2117M–00	19 – 21
5PS–2117V–00	19 – 19
5PS–2117W–00	19 – 20
5PS–21190–11	19 – 2
5PS–21228–00	35 – 23
1JK–21268–00	19 – 27
5BM–21268–00	8 – 66
5PS–2132F–00	20 – 53
4XV–21376–00	20 – 44
5PS–2139E–00	20 – 54
5PS–2139X–00	26 – 36
5PS–2144G–00	44 – 10
5PS–21489–00	19 – 17
4C8–21495–00	19 – 12
	19 – 16
4X7–2149Y–00	9 – 34
5PS–21511–00–P6	20 – 1
5PS–21511–00–PA	20 – 1

CODIGO Nº	REF. Nº
4NX–21541–00	25 – 41
1CA–21568–00	26 – 8
5PS–21611–00	20 – 8
5PS–2162A–00	20 – 12
51Y–21639–00	20 – 34
5PS–21639–00	20 – 23
5PS–2163A–00	20 – 21
5JW–21647–01	20 – 11
5PS–21649–00	20 – 28
5PS–21650–00	22 – 39
5PS–21651–00–7M	20 – 26
5PS–21651–00–P6	20 – 26
5BM–21652–00	8 – 65
5PS–21654–00	20 – 46
5PS–21654–10	20 – 49
5PS–21668–10	22 – 42
5PS–21711–00	21 – 12
15A–21717–00	36 – 42
1J7–21717–00	21 – 14
4TX–21717–00	36 – 2
	36 – 49
	36 – 51
2B0–21719–00	21 – 6
5PS–21721–00	21 – 13
5PS–21750–10	8 – 60
5PS–21761–00	8 – 58
5PS–2178A–00	36 – 3
	36 – 35
	36 – 38
5PS–21816–00	21 – 5
26H–21828–00	21 – 4
5PS–21871–00	21 – 1
5EB–21875–00	21 – 3
5PS–22110–10	22 – 1
5EB–22123–00	22 – 6
5PS–22125–00	22 – 12
5EB–22127–00	22 – 5
3FV–22128–00	22 – 7
5PS–22141–00	22 – 9
5PS–22151–00	22 – 32
5PS–2217A–00	22 – 16
5PS–2217M–00	22 – 17
5PS–22184–00	22 – 2
5PS–22210–20	23 – 1
5PS–22219–01	23 – 4
5PS–23102–30	25 – 1
5PS–23103–30	25 – 19
5PS–23110–10	25 – 3

CODIGO Nº	REF. Nº
5PS–23110–10	25 – 21
5PS–23111–00	25 – 18
	25 – 36
4GY–23118–10	25 – 16
	25 – 34
4KM–23123–01	24 – 17
3GM–23125–00	25 – 6
	25 – 24
5PS–23126–30	25 – 2
5PS–23136–30	25 – 20
5PS–23141–10	25 – 14
	25 – 32
4PU–23144–00	25 – 10
	25 – 28
4PU–23145–01	25 – 8
	25 – 26
4V4–23146–L0	25 – 7
	25 – 25
3FV–23149–00	25 – 17
	25 – 35
3LR–23149–00	25 – 15
	25 – 33
4V4–23153–L0	25 – 9
	25 – 27
509–23158–L0	25 – 12
	25 – 30
5PS–23170–10	25 – 5
	25 – 23
3GM–23171–00	25 – 4
	25 – 22
5PS–23173–00	25 – 11
	25 – 29
5PS–2317E–00	45 – 33
278–23181–50	25 – 13
	25 – 31
4PU–2331G–00	25 – 40
5PS–23340–20	25 – 38
5PS–23378–20	45 – 35
5PS–23389–01	24 – 15
4XV–23415–01	24 – 4
5VY–23418–00	24 – 6
5PS–23435–20	24 – 10
4H7–23441–01–98	24 – 12
3FV–23462–00	24 – 2
12R–23469–00	24 – 14
5PW–2413B–00	26 – 9
5PS–2414H–10	26 – 34
5PS–24181–00	26 – 12

CODIGO Nº	REF. Nº
5PS–24181–10	26 – 13
5EB–24183–00	26 – 19
5PS–24183–00	26 – 14
5PS–24186–00	26 – 16
5JX–24188–00	8 – 64
5PS–24191–00	26 – 11
5PS–24192–00	26 – 22
5JW–24311–00	10 – 28
5PS–24318–00	26 – 30
	26 – 32
68V–24376–00	10 – 27
5JW–24486–00	26 – 25
5JW–24491–00	26 – 24
5JJ–24602–00	26 – 27
5PS–2470F–20	27 – 2
5PS–2470F–30	27 – 2
5PS–2471K–00–7M	20 – 24
5PS–2471K–00–P6	20 – 24
5PS–24723–00	20 – 38
5PS–24723–10	20 – 40
5PS–24724–00	20 – 39
5PS–24724–10	20 – 41
4HM–24728–00	27 – 3
5PS–2472K–00–7M	20 – 25
5PS–2472K–00–P6	20 – 25
5PS–24730–20	27 – 1
5PS–24730–30	27 – 1
5LV–24737–00	27 – 8
22W–24741–00	27 – 5
5PS–24741–00	27 – 7
5PS–24746–00	27 – 15
5JJ–2475X–01	27 – 17
5PS–24773–10	20 – 35
4BP–24780–00	27 – 9
5PS–2478E–00	27 – 12
5PS–24792–00	27 – 10
4XV–25117–00	28 – 2
5PS–25168–00–98	28 – 1
4XV–25181–10	28 – 8
5PS–25317–00	30 – 4
5PS–25338–00–98	30 – 1
5EA–25364–00	30 – 5
5PS–25366–00	30 – 9
5PS–25376–00	30 – 24
4FM–25377–00	30 – 12
5EB–25377–00	30 – 25
4FM–25381–20	30 – 21
5EB–25388–00	30 – 16

CODIGO Nº	REF. Nº
5PS–25389–00	30 – 17
5MT–25398–00	28 – 7
	30 – 8
5MT–25398–10	28 – 7
	30 – 8
5MT–25398–20	28 – 7
	30 – 8
5PS–25442–00	30 – 13
2D1–2580T–00	29 – 3
2D1–2580U–00	29 – 13
5PS–2580W–01	31 – 3
5PX–2581T–00	29 – 1
5GJ–25827–00	31 – 10
5VX–2582A–00	35 – 9
4JH–2582W–00	31 – 1
5PS–2583V–00	35 – 7
5SL–25852–00	35 – 14
5VS–25852–00	33 – 3
20S–25854–00	33 – 5
5SL–25854–00	35 – 12
5SL–25855–00	35 – 13
5VS–25855–00	33 – 4
4BP–2585F–00	35 – 10
5VS–25867–00	33 – 11
5PS–25872–11	33 – 16
5PS–25874–10	35 – 27
5PS–25875–00	22 – 35
4NK–25876–00	22 – 36
2R8–25876–20	33 – 22
5VS–25894–00	35 – 11
5PS–25895–10	35 – 16
5VS–2589F–00	33 – 7
5VS–2589H–00	33 – 6
5JW–25914–10	31 – 6
4SV–25919–00	29 – 9
	29 – 19
5JW–25919–00	31 – 9
4SV–25924–00	29 – 10
	29 – 20
3GM–25925–00	29 – 11
	29 – 21
4TT–25937–00	31 – 7
5PS–26111–10	32 – 1
5PS–26133–20	32 – 12
	32 – 14
5PS–26240–00	32 – 3
5JW–26241–00	32 – 2
51J–26246–01	32 – 4

CODIGO Nº	REF. Nº
4TX–26280–50	32 – 11
4KG–26281–00	32 – 6
3XW–26282–01	32 – 7
4TX–26290–50	32 – 13
5PS–26302–00	32 – 5
5VS–26332–00	33 – 10
5PS–26335–01	32 – 9
1E6–26342–00	32 – 10
128–27114–00	34 – 2
5PS–27211–00	35 – 1
5PS–27212–00	35 – 3
47X–27222–00	35 – 17
5PS–27311–00	34 – 1
5JJ–27315–00	34 – 9
5PS–27321–00	34 – 3
5PS–27323–00	34 – 11
5PS–27352–00	34 – 4
3YX–27413–00	34 – 18
	34 – 25
	34 – 40
36Y–27414–00	11 – 2
5LV–27431–01	34 – 32
5JW–27434–00	18 – 17
5JJ–27437–01	34 – 36
5LV–27441–01	34 – 33
5PS–27442–00	34 – 28
5PS–27443–00	34 – 29
4BH–27451–01	34 – 14
4BH–27461–01	34 – 21
5PS–28100–01	20 – 47
2B0–28199–S5	20 – 48
3TB–28217–00	21 – 17
5PS–28217–00	26 – 35
	36 – 13
5PS–28315–00	36 – 65
	36 – 66
5PS–28315–30	36 – 65
	36 – 66
5PS–28321–00	36 – 53
5PS–28331–00	36 – 31
5PS–28332–00	36 – 20
5PS–28336–00	36 – 21
5PS–28345–00	36 – 15
1AE–2834E–00	20 – 16
4XV–2834E–00	41 – 15
5PS–28356–01	36 – 18
5PS–28357–01	36 – 55
5PS–2835G–00–7M	36 – 1

CODIGO Nº	REF. Nº
5PS–2835G–00–P4	36 – 1
5PS–2835U–00–PA	36 – 34
5PS–2835U–00–PE	36 – 34
5PS–2835V–00–PA	36 – 37
5PS–2835V–00–PE	36 – 37
5PS–2836A–00	36 – 58
5GT–2836B–00	40 – 6
5LV–2836B–01	36 – 64
5PS–2836E–00	36 – 60
5PS–2836K–00	36 – 10
5PS–28372–00	26 – 37
5PS–28373–00	36 – 23
5PS–2837N–01	36 – 48
5PS–2837R–00	36 – 50
5PS–28381–01	36 – 8
5PS–28396–00	36 – 29
5PS–28397–00	36 – 30
5PS–2839B–00	36 – 62
	36 – 63
4D9–81168–00	45 – 14
5PS–81410–00	37 – 1
5PS–81450–00	37 – 2
3AJ–81801–00	38 – 2
3AJ–81809–00	38 – 3
1HX–81815–00	38 – 8
3AJ–81826–00	38 – 5
4XV–8182A–00	38 – 10
3AJ–81830–00	38 – 4
11H–81844–00	38 – 6
1FK–81847–00	38 – 7
4G0–81871–00	38 – 9
3LD–81890–00	38 – 1
3EL–81940–12	45 – 24
5PX–81950–00	45 – 28
5EA–81950–20	45 – 29
5JW–81960–00	44 – 21
4TX–82100–02	44 – 6
5SL–82113–01	44 – 28
5PS–82115–00	44 – 7
5PS–82116–00	44 – 8
3VD–82131–00	20 – 10
42X–82151–00	45 – 25
5PS–82151–00	44 – 17
5JJ–82151–10	44 – 14
5JJ–82151–20	44 – 15
5JJ–82151–30	44 – 13
5JJ–82151–90	44 – 16
2UJ–82310–01	44 – 3

CODIGO Nº	REF. Nº
5JW–82370–00	44 – 5
1C7–82380–00	10 – 23
	45 – 10
5PS–82386–00	9 – 27
5PS–82509–01	10 – 22
5SL–82511–08	44 – 29
5PS–82530–00	44 – 9
5PS–82540–00	45 – 4
5VS–8255P–00	44 – 27
5RT–82566–61	45 – 1
5PS–82576–01	44 – 37
5VS–8258J–00	44 – 30
5PS–82590–41	44 – 12
1UA–82591–00	33 – 20
	45 – 20
	45 – 27
5VS–8259J–00	44 – 31
5VS–82729–00	44 – 32
3YX–82911–01	43 – 7
3YX–82917–01	43 – 9
5PW–83310–01	39 – 1
1KH–83311–00	39 – 2
	39 – 6
	39 – 11
	39 – 15
5PW–83318–00	39 – 9
	39 – 18
5PW–83320–01	39 – 5
5PS–83330–01	39 – 10
5PW–8333A–00	39 – 3
	39 – 16
5PS–83340–01	39 – 14
5PW–8334A–00	39 – 7
	39 – 12
3XV–83350–21	45 – 30
5PS–83371–00	45 – 31
5PS–8338L–00	13 – 45
5PS–83513–00	40 – 11
	41 – 5
4YR–83517–00	40 – 2
5PS–83517–00	40 – 4
4YR–83517–10	40 – 3
5PS–83523–00	40 – 9
5PS–8353E–01	40 – 5
5PS–83541–00	40 – 10
5PS–83570–60	40 – 1
5PS–83572–00	40 – 7
4BH–83591–00	9 – 25

CODIGO Nº	REF. Nº
5PS–83755–01	45 – 17
3YX–83912–11	43 – 8
5VS–83922–00	33 – 9
437–83936–01	43 – 6
3YX–83945–00	43 – 12
5PS–83969–10	43 – 1
5RT–83975–00	43 – 4
4HM–83980–00	33 – 12
5PS–8411W–00	41 – 2
5PS–84163–00	36 – 7
3GM–84192–10	41 – 13
3GM–84301–01	41 – 9
5PS–84310–00	41 – 1
4TX–8431R–00	41 – 17
3GM–84321–00	41 – 10
3GM–84322–00	41 – 11
3GM–84346–00	41 – 14
5PS–84359–10	41 – 8
3GM–84367–50	41 – 22
4TV–84397–00	41 – 4
5PS–84710–00	42 – 1
1A2–84714–41	42 – 2
5PS–84721–00	42 – 3
47X–84723–00	42 – 4
5PS–84735–00	42 – 5
3Y6–85130–02	42 – 10
47G–85353–00	41 – 12
5PS–85720–00	45 – 21
5PS–85790–00	45 – 8
3P6–85885–00	10 – 8
5PS–85896–10	45 – 13
2B0–8591A–10	44 – 26
5PS–8592A–10	45 – 19
4XV–8A8E0–00	45 – 22
5VS–W0041–00	33 – 2
5PS–W0042–50	35 – 8
5SL–W0045–00	29 – 8
	29 – 18
5PS–W0046–00	31 – 8
5JW–W0047–00	31 – 5
3GM–W0047–10	29 – 7
	29 – 17
3MA–W0047–10	29 – 5
	29 – 15
1J3–W0048–00	29 – 12
	29 – 22
51L–W0048–00	31 – 11
4SV–W0057–00	29 – 4

CODIGO Nº	REF. Nº
4SV–W0057–00	29 – 14
5JW–W0057–00	31 – 4
4SV–W0057–10	29 – 6
	29 – 16
2TV–W2470–00	27 – 13
5PS–W2587–00	33 – 1
2B0–W8250–10	44 – 25
5PS–YK241–10–7M	26 – 7
5PS–YK241–10–P9	26 – 7
90101–06664	44 – 33
90101–08013	30 – 19
90101–08662	34 – 8
90101–10659	22 – 28
90101–12749	22 – 22
90105–06020	20 – 17
90105–06153	1 – 7
90105–06790	33 – 21
	33 – 23
90105–07004	5 – 4
90105–08047	19 – 6
	19 – 9
90105–08113	31 – 12
90105–10032	19 – 10
90105–10113	19 – 14
90105–10323	22 – 25
90105–10402	23 – 2
90105–10560	12 – 7
90105–105A7	29 – 23
90105–12584	3 – 17
90109–06044	1 – 27
90109–06045	1 – 28
90109–06046	20 – 50
90109–06056	8 – 55
90109–064G6	29 – 2
90109–065A8	13 – 7
90109–066F0	1 – 26
90109–080G5	44 – 34
90109–08170	11 – 7
90109–08174	34 – 20
	34 – 27
90109–082F5	34 – 13
90109–083G4	31 – 2
90109–087F1	11 – 21
90110–05011	37 – 4
90110–05014	26 – 26
90110–05112	26 – 28
90110–05201	36 – 43
	36 – 47

CODIGO Nº	REF. Nº
90110–06006	13 – 38
90110–06018	8 – 18
	8 – 37
	8 – 57
90110–06027	17 – 16
90110–06042	37 – 3
90110–06060	17 – 6
90110–06093	8 – 54
90110–06124	45 – 15
90110–06200	20 – 2
90110–06226	34 – 10
90110–08220	34 – 30
90111–06037	7 – 14
90111–08005	20 – 36
90111–08006	20 – 37
90111–12001	19 – 4
	19 – 7
90116–10575	30 – 14
90119–05062	20 – 22
90119–06044	7 – 3
	35 – 24
	36 – 22
90119–06096	22 – 33
90119–06108	20 – 13
90119–06117	21 – 2
	22 – 40
90119–06118	20 – 14
90119–06214	9 – 32
90119–06228	24 – 16
90123–08096	43 – 10
90149–05009	1 – 20
	13 – 28
90149–05299	36 – 46
90149–05321	17 – 2
90149–06018	45 – 6
90149–06160	14 – 6
90149–10002	19 – 3
90150–05024	36 – 9
90151–06008	12 – 27
90151–06011	16 – 15
90153–06029	2 – 4
90157–05079	34 – 19
	34 – 26
90157–05134	34 – 41
90159–06033	21 – 15
90159–06123	15 – 10
90164–05014	40 – 12
	41 – 7

CODIGO Nº	REF. Nº
90167–05025	41 – 16
90167–05037	41 – 20
90167–05076	36 – 16
90167–05080	36 – 6
	36 – 12
90170–06183	27 – 16
90170–06228	18 – 11
90170–08010	35 – 18
90170–20008	15 – 15
90176–28083	24 – 8
90179–05523	36 – 11
	36 – 14
	36 – 44
90179–06009	20 – 4
90179–06635	27 – 4
90179–08148	43 – 11
90179–08410	11 – 6
90179–09379	3 – 9
90179–10002	19 – 11
90179–10414	1 – 12
90179–10696	19 – 15
90179–22011	16 – 35
90179–30691	24 – 5
90183–04039	44 – 39
90183–05042	36 – 5
	36 – 36
	36 – 39
90183–05061	36 – 4
90183–06023	35 – 26
90183–06053	44 – 23
	45 – 12
90185–12119	22 – 23
90185–18167	22 – 10
90185–24007	30 – 22
90201–04018	20 – 20
90201–047A2	44 – 40
90201–054K4	41 – 21
90201–06043	20 – 52
90201–06071	7 – 21
	42 – 7
90201–066F0	12 – 10
	12 – 24
90201–08083	35 – 21
90201–08087	12 – 15
	12 – 17
90201–080H1	18 – 20
90201–081R9	34 – 7
90201–08753	11 – 8

CODIGO Nº	REF. Nº
90201–10119	15 – 25
90201–101J1	22 – 30
	23 – 6
90201–103M4	1 – 11
90201–10N12	16 – 43
90201–11597	12 – 8
90201–12013	18 – 19
90201–12163	15 – 23
90201–121H0	3 – 18
90201–12575	18 – 5
90201–127E1	6 – 9
90201–14215	35 – 2
90201–186M4	22 – 11
90201–191J4	18 – 3
90201–20008	16 – 36
90201–25020	30 – 23
90201–25M72	16 – 29
90201–281U8	24 – 9
90201–30008	14 – 7
90202–05187	44 – 24
90202–05224	36 – 17
	36 – 45
90202–06170	20 – 7
90202–30235	24 – 7
90206–08051	20 – 51
90206–12074	18 – 18
90209–21332	16 – 6
90209–21351	16 – 12
90209–22352	16 – 11
90209–28330	16 – 26
90209–28331	16 – 19
	16 – 22
90209–29329	16 – 25
90215–20004	15 – 14
90215–30233	16 – 34
90240–08013	35 – 20
90240–08084	34 – 16
	34 – 23
90267–40110	20 – 19
90269–06081	20 – 30
90269–07001	19 – 22
90269–07077	36 – 57
90269–08001	22 – 41
90280–05029	3 – 16
90338–06018	27 – 6
90338–08008	19 – 26
90338–08163	20 – 42
90338–08226	20 – 15

CODIGO Nº	REF. Nº
90338–10132	36 – 40
90338–10150	1 – 9
90338–11125	36 – 41
90338–24112	19 – 13
90340–14013	13 – 41
90340–14132	8 – 45
90340–18101	1 – 6
90340–32004	13 – 43
90383–14001	34 – 31
90387–052U5	41 – 19
90387–06014	34 – 39
90387–0602Y	26 – 15
90387–06048	20 – 33
90387–0614M	7 – 16
90387–061W6	26 – 20
90387–06372	22 – 34
90387–065T2	20 – 6
90387–066Y6	42 – 8
90387–06761	8 – 71
90387–0714B	7 – 17
90387–085N0	8 – 67
90387–1012B	22 – 27
90387–106W6	8 – 32
	8 – 69
90387–120W5	8 – 6
90387–126Y1	22 – 15
	22 – 21
90387–127W0	22 – 31
90387–130W6	8 – 73
90387–14003	19 – 5
	19 – 8
90387–2200T	28 – 9
90387–25004	16 – 4
90387–2511A	16 – 30
90387–2513E	16 – 9
90387–2802W	16 – 23
90387–32003	16 – 17
90401–10002	8 – 26
90401–10020	33 – 17
	33 – 18
	35 – 28
90430–06014	2 – 5
	6 – 6
90430–08119	1 – 15
90430–09002	10 – 18
90430–10005	33 – 19
	35 – 29
90430–10188	8 – 27

CODIGO Nº	REF. Nº
90430–10188	8 – 43
90430–12202	9 – 26
	45 – 9
90430–14131	8 – 5
90445–08010	9 – 21
90445–08024	9 – 30
90445–083J5	21 – 8
90445–11026	8 – 62
90445–116H6	9 – 35
90445–197J2	34 – 6
90450–25037	8 – 51
90450–32015	7 – 27
90450–38040	7 – 11
90450–52002	9 – 29
90450–63001	9 – 3
90462–05005	9 – 24
90462–08017	45 – 7
90464–07209	36 – 26
90464–07M56	44 – 19
90464–10233	21 – 10
90464–12089	19 – 23
90464–13249	19 – 25
	44 – 18
90464–14001	44 – 20
90464–14010	21 – 11
90464–15157	21 – 7
90464–15195	36 – 27
90464–16005	26 – 3
90464–16007	26 – 2
90464–18002	20 – 5
	22 – 38
90464–20181	19 – 24
90464–25003	44 – 36
90464–35132	36 – 25
90465–08028	45 – 16
90465–08034	13 – 18
90465–08125	13 – 12
90465–08380	37 – 5
90465–10028	12 – 25
90465–10098	9 – 47
	36 – 24
	36 – 32
	44 – 35
90467–08075	21 – 9
90467–09006	26 – 31
	26 – 33
90467–09037	10 – 16
90467–090A1	35 – 15

CODIGO Nº	REF. Nº
90467–10008	8 – 63
90467–10038	7 – 9
90467–11090	10 – 11
90467–11106	9 – 36
90467–12003	26 – 5
	26 – 6
90467–14015	9 – 38
90467–17003	9 – 41
90467–20086	9 – 46
90468–08104	9 – 39
90480–01558	21 – 16
90480–10517	41 – 18
90480–14323	42 – 6
90480–15363	7 – 15
90501–06022	17 – 4
90501–064L1	17 – 12
90501–104F9	8 – 31
90501–15001	34 – 34
90501–230E4	15 – 9
90506–20008	34 – 5
90506–20223	35 – 6
90508–14012	15 – 17
90508–20572	34 – 15
	34 – 22
90508–29016	17 – 14
90508–32682	18 – 2
91314–06016	6 – 17
91314–06020	5 – 8
	6 – 3
	8 – 22
	8 – 49
	12 – 34
91314–06025	8 – 41
	13 – 8
	13 – 23
	13 – 30
91314–06030	6 – 10
	8 – 23
	13 – 31
91314–06035	8 – 44
91314–06040	8 – 24
	34 – 37
91314–06045	6 – 11
91314–06050	13 – 24
91314–06060	6 – 12
91314–08030	24 – 11
	24 – 13
91314–08040	25 – 37

CODIGO Nº	REF. Nº
91317–04025	44 – 38
91317–05010	26 – 29
91317–05016	44 – 4
91317–05035	32 – 8
91317–06010	13 – 16
	45 – 18
91317–06012	45 – 23
91317–06014	13 – 15
91317–06016	7 – 25
91317–06020	9 – 2
	13 – 17
91317–06025	7 – 20
91317–06030	13 – 10
91317–06045	13 – 39
91317–06150	1 – 13
91317–08025	25 – 39
91380–06010	11 – 4
91380–06035	13 – 37
91401–20012	35 – 22
91401–25015	34 – 17
	34 – 24
91808–16023	1 – 5
92014–06020	20 – 3
92014–06025	35 – 4
92014–08030	35 – 19
92017–06010	26 – 23
	45 – 32
92017–06014	20 – 32
92017–06025	26 – 17
92507–06014	10 – 24
92902–04100	33 – 14
92902–04600	33 – 15
92904–06600	44 – 2
92907–05600	7 – 8
92907–08600	15 – 19
92907–12600	22 – 24
92990–06600	35 – 5
93101–12004	18 – 22
93102–12106	15 – 22
93102–40008	16 – 32
93106–15034	13 – 13
93106–28043	28 – 4
93106–35042	30 – 3
93106–40041	30 – 11
93109–12075	13 – 3
93109–17071	22 – 14
	22 – 20
93109–33049	22 – 8

CODIGO Nº	REF. Nº
93210–07135	8 – 72
93210–10096	8 – 35
	8 – 68
93210–12790	8 – 33
	8 – 70
93210–13657	8 – 48
	8 – 53
93210–14369	13 – 42
93210–15566	8 – 74
93210–18417	7 – 24
93210–21190	6 – 14
	8 – 59
93210–29196	45 – 5
93210–30660	3 – 15
93210–32172	13 – 44
93210–33133	6 – 7
93210–357A2	6 – 15
93210–49046	7 – 31
93210–64297	8 – 21
93306–00304	15 – 3
93306–00420	28 – 3
93306–07806	30 – 2
93306–20455	16 – 38
93306–20464	16 – 14
93306–20644	30 – 10
93306–30534	16 – 2
93310–365B8	15 – 30
93315–42523	22 – 3
93315–42536	22 – 4
93317–11096	15 – 21
93317–11287	15 – 24
93317–21288	13 – 2
93317–21746	22 – 13
	22 – 18
93317–31771	22 – 19
93399–99932	24 – 1
	24 – 3
93440–10109	1 – 4
93440–25084	16 – 7
93440–31183	16 – 20
93440–45144	16 – 39
93450–22146	3 – 6
93501–04011	34 – 35
93505–08030	8 – 30
93900–00030	28 – 6
	30 – 7
94112–18019	28 – 5
94116–17008	30 – 6

CODIGO Nº	REF. Nº
94581–46118	30 – 20
94591–40138	5 – 5
94701–00241	1 – 10
94701–00242	1 – 10
95022–06020	7 – 32
95024–06012	6 – 5
	11 – 14
	11 – 20
95024–08012	1 – 14
95024–08025	11 – 11
	11 – 17
95024–10040	8 – 42
95027–06008	45 – 26
95027–06010	7 – 35
	9 – 5
	9 – 44
	34 – 12
	45 – 34
95027–06014	45 – 11
95027–06016	22 – 37
95027–06020	1 – 24
	8 – 15
	43 – 15
95027–06025	7 – 33
	8 – 14
95027–06090	26 – 21
95302–08600	30 – 18
95304–06700	18 – 12
95307–06600	42 – 9
95307–10700	16 – 44
95604–06200	34 – 38
95607–05200	45 – 3
95607–06100	43 – 13
95607–10200	22 – 26
	30 – 15
95607–14200	23 – 5
95617–06100	33 – 8
95617–08625	1 – 8
95617–10100	22 – 29
	23 – 3
95707–05500	42 – 11
95707–06500	27 – 11
95707–08500	36 – 28
95807–06012	36 – 59
	36 – 61
95807–06014	35 – 25
95807–06020	36 – 54
	36 – 56

CODIGO Nº	REF. Nº
95807–06025	7 – 18
95807–06030	7 – 19
	44 – 22
95807–08016	26 – 18
95814–06040	12 – 9
	12 – 23
95814–08050	12 – 14
95814–08060	12 – 16
95814–08070	12 – 20
95817–06020	12 – 12
95817–06025	12 – 22
95817–06030	12 – 13
95817–06045	12 – 30
95817–06050	38 – 11
95817–06055	12 – 11
95817–06070	12 – 18
	12 – 31
95817–08025	36 – 33
95817–08030	19 – 18
95817–08065	12 – 19
95817–08075	12 – 21
95827–06010	45 – 36
95827–06012	16 – 41
95827–06014	8 – 61
95827–06020	18 – 9
95827–08035	20 – 45
97007–05012	7 – 7
97024–06016	44 – 1
97706–04012	39 – 4
	39 – 8
	39 – 13
	39 – 17
97707–40012	27 – 18
97707–40016	40 – 8
97707–50012	20 – 27
97707–50014	20 – 31
97707–50016	36 – 52
	41 – 6
97707–50020	9 – 13
	20 – 18
97707–60020	20 – 9
98502–04012	33 – 13
98507–05010	10 – 9
	10 – 13
98507–05014	10 – 6
98507–05020	45 – 2
98507–05022	43 – 5
98507–05030	10 – 5

CODIGO Nº	REF. Nº
98507–05030	43 – 2
98507–05040	43 – 3
98507–06008	44 – 11
98507–06035	8 – 10
98507–06045	8 – 4
	10 – 21
98707–03020	43 – 14
98907–05012	9 – 18
98907–05016	9 – 23
99001–07600	15 – 20
99001–10600	18 – 6
99009–10400	15 – 26
99009–11400	8 – 12
99009–12400	6 – 4
99009–19400	18 – 4
99247–00080	20 – 29
99530–08012	8 – 2
	12 – 35
	13 – 5
	13 – 32
99530–08016	8 – 38
	12 – 29
99530–10114	12 – 4
	13 – 11
	13 – 40
99530–14016	2 – 3
	12 – 5

CODIGO Nº	REF. Nº

CODIGO Nº	REF. Nº

CODIGO Nº	REF. Nº

CODIGO Nº	REF. Nº