YAMAHA 2015

SERVICE MANUAL

YFM700RF
YFM700RSF

RAPTOR

LIT-11616-28-28 2LS-F8197-10

EAS20050

YFM700RF/YFM700RSF
SERVICE MANUAL
©2014 by Yamaha Motor Corporation, U.S.A.
First edition, July 2014
All rights reserved.
Any reproduction or unauthorized use
without the written permission of
Yamaha Motor Corporation, U.S.A.
is expressly prohibited.
Printed in U.S.A.
LIT-11616-28-28

EAS20071

IMPORTANT

This manual was produced by the Yamaha Motor Company, Ltd. primarily for use by Yamaha dealers and their qualified mechanics. It is not possible to include all the knowledge of a mechanic in one manual. Therefore, anyone who uses this book to perform maintenance and repairs on Yamaha vehicles should have a basic understanding of mechanics and the techniques to repair these types of vehicles. Repair and maintenance work attempted by anyone without this knowledge is likely to render the vehicle unsafe and unfit for use.

This model has been designed and manufactured to perform within certain specifications in regard to performance and emissions. Proper service with the correct tools is necessary to ensure that the vehicle will operate as designed. If there is any question about a service procedure, it is imperative that you contact a Yamaha dealer for any service information changes that apply to this model. This policy is intended to provide the customer with the most satisfaction from his vehicle and to conform to federal environmental quality objectives.

Yamaha Motor Company, Ltd. is continually striving to improve all of its models. Modifications and significant changes in specifications or procedures will be forwarded to all authorized Yamaha dealers and will appear in future editions of this manual where applicable.

TIP

- This Service Manual contains information regarding periodic maintenance to the emission control system. Please read this material carefully.
- Designs and specifications are subject to change without notice.

EAS20081

IMPORTANT MANUAL INFORMATION

Particularly important information is distinguished in this manual by the following notations.

⚠	**This is the safety alert symbol. It is used to alert you to potential personal injury hazards. Obey all safety messages that follow this symbol to avoid possible injury or death.**
⚠ WARNING	**A WARNING indicates a hazardous situation which, if not avoided, could result in death or serious injury.**
NOTICE	**A NOTICE indicates special precautions that must be taken to avoid damage to the vehicle or other property.**
TIP	A TIP provides key information to make procedures easier or clearer.

EAS20090

HOW TO USE THIS MANUAL

This manual is intended as a handy, easy-to-read reference book for the mechanic. Comprehensive explanations of all installation, removal, disassembly, assembly, repair and check procedures are laid out with the individual steps in sequential order.

- The manual is divided into chapters and each chapter is divided into sections. The current section title "1" is shown at the top of each page.
- Sub-section titles "2" appear in smaller print than the section title.
- To help identify parts and clarify procedure steps, there are exploded diagrams "3" at the start of each removal and disassembly section.
- Numbers "4" are given in the order of the jobs in the exploded diagram. A number indicates a disassembly step.
- Symbols "5" indicate parts to be lubricated or replaced.
  Refer to "SYMBOLS".
- A job instruction chart "6" accompanies the exploded diagram, providing the order of jobs, names of parts, notes in jobs, etc.
- Jobs "7" requiring more information (such as special tools and technical data) are described sequentially.

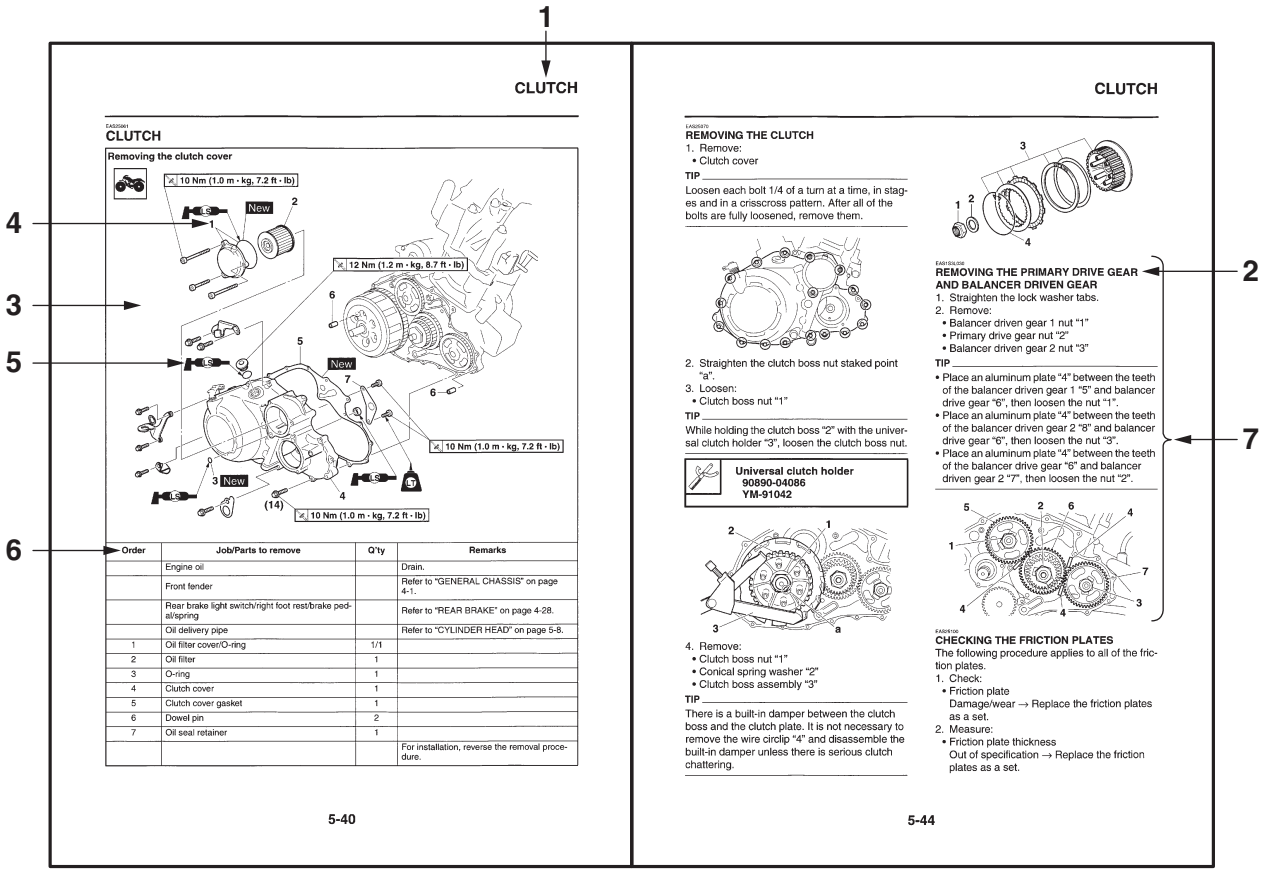

EAS20100

SYMBOLS

The following symbols are used in this manual for easier understanding.

TIP

The following symbols are not relevant to every vehicle.

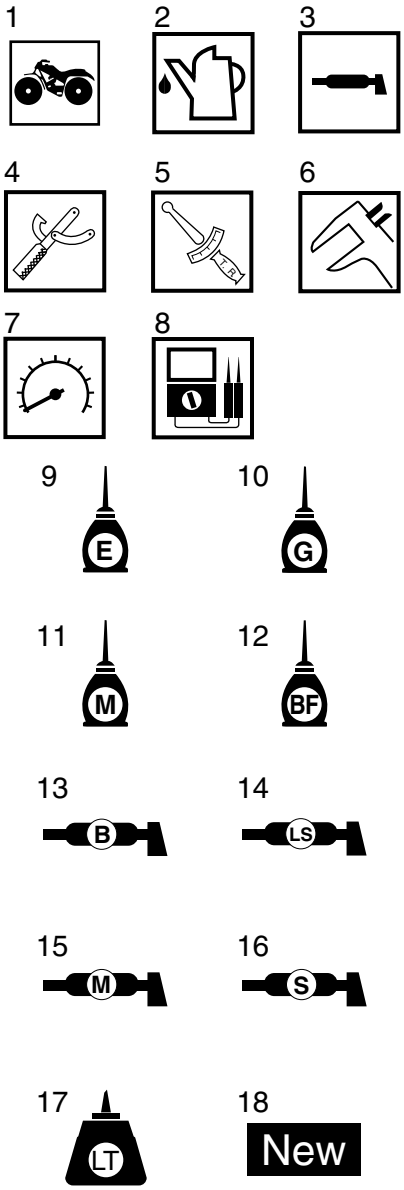

1. Serviceable with engine mounted
2. Filling fluid
3. Lubricant
4. Special tool
5. Tightening torque
6. Wear limit, clearance
7. Engine speed
8. Electrical data
9. Engine oil
10. Gear oil
11. Molybdenum disulfide oil
12. Brake fluid
13. Wheel bearing grease
14. Lithium-soap-based grease
15. Molybdenum disulfide grease
16. Silicone grease
17. Apply locking agent (LOCTITE®).
18. Replace the part with a new one.

EAS20110

TABLE OF CONTENTS

GENERAL INFORMATION

EAS20130
IDENTIFICATION

EAS20140
VEHICLE IDENTIFICATION NUMBER
The vehicle identification number “1” is stamped into the left side of the frame.

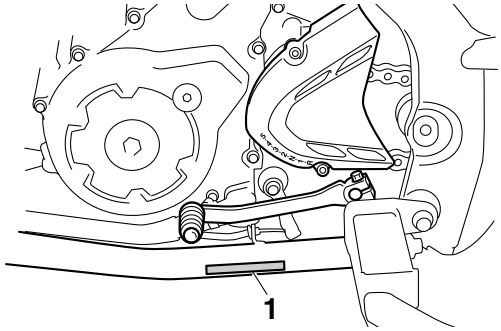

EAS20150
MODEL LABEL
The model label “1” is affixed to the air filter case cover. This information will be needed to order spare parts.

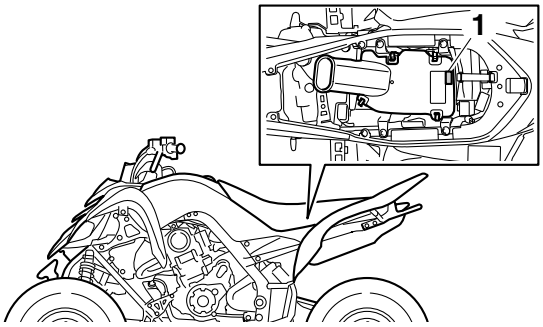

EAS20170
FEATURES

EAS1S3L001
OUTLINE OF THE FI SYSTEM

The main function of a fuel supply system is to provide fuel to the combustion chamber at the optimum air-fuel ratio in accordance with the engine operating conditions and the atmospheric temperature. In the conventional carburetor system, the air-fuel ratio of the mixture that is supplied to the combustion chamber is created by the volume of the intake air and the fuel that is metered by the jet used in the respective carburetor.

Despite the same volume of intake air, the fuel volume requirement varies with the engine operating conditions, such as acceleration, deceleration, or operating under a heavy load. Carburetors that meter the fuel through the use of jets have been provided with various auxiliary devices, so that an optimum air-fuel ratio can be achieved to accommodate the constant changes in the operating conditions of the engine.

As the requirements for the engine to deliver more performance and cleaner exhaust gases increase, it becomes necessary to control the air-fuel ratio in a more precise and finely tuned manner. To accommodate this need, this model has adopted an electronically controlled fuel injection (FI) system, in place of the conventional carburetor system. This system can achieve an optimum air-fuel ratio required by the engine at all times by using a microprocessor that regulates the fuel injection volume according to the engine operating conditions detected by various sensors.

The adoption of the FI system has resulted in a highly precise fuel supply, improved engine response, better fuel economy, and reduced exhaust emissions.

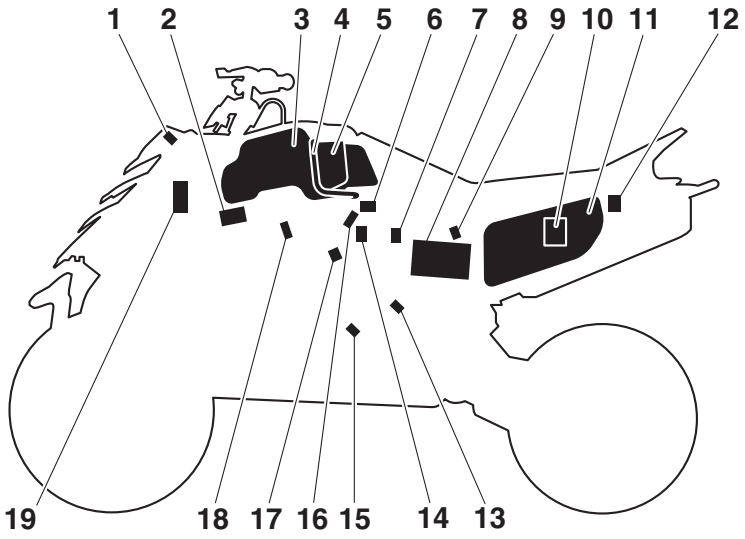

1. Engine trouble warning light
2. Ignition coil
3. Fuel tank
4. Fuel hose
5. Fuel pump
6. Intake air pressure sensor
7. Lean angle sensor
8. Battery
9. Intake air temperature sensor
10. ECU (electronic control unit)
11. Air filter case
12. Fuel pump relay
13. Speed sensor
14. Throttle position sensor
15. Crankshaft position sensor
16. Fuel injector
17. Coolant temperature sensor
18. Spark plug
19. Air induction system solenoid

EAS1S3L002

FI SYSTEM

The fuel pump delivers fuel to the fuel injector via the fuel filter. The pressure regulator maintains the fuel pressure that is applied to the fuel injector at only 324 kPa (3.24 kgf/cm², 46.1 psi). Accordingly, when the energizing signal from the ECU energizes the fuel injector, the fuel passage opens, causing the fuel to be injected into the intake manifold only during the time the passage remains open. Therefore, the longer the length of time the fuel injector is energized (injection duration), the greater the volume of fuel that is supplied. Conversely, the shorter the length of time the fuel injector is energized (injection duration), the lesser the volume of fuel that is supplied.

The injection duration and the injection timing are controlled by the ECU. Signals that are input from the throttle position sensor, crankshaft position sensor, intake air pressure sensor, intake air temperature sensor, coolant temperature sensor and speed sensor enable the ECU to determine the injection duration. The injection timing is determined through the signals from the crankshaft position sensor. As a result, the volume of fuel that is required by the engine can be supplied at all times in accordance with the driving conditions.

Illustration is for reference only.

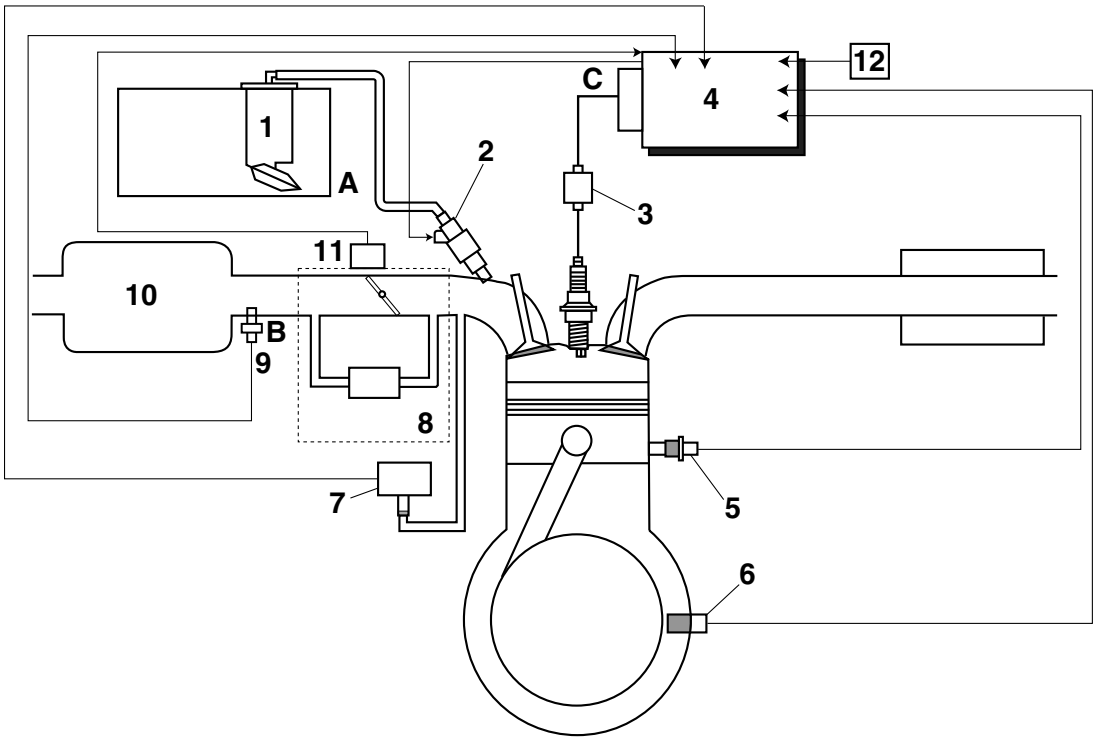

1. Fuel pump
2. Fuel injector
3. Ignition coil
4. ECU (electronic control unit)
5. Coolant temperature sensor
6. Crankshaft position sensor
7. Intake air pressure sensor
8. Throttle body
9. Intake air temperature sensor
10. Air filter case
11. Throttle position sensor
12. Speed sensor

A. Fuel system
B. Air system
C. Control system

EAS1S3L005
INSTRUMENT FUNCTIONS

Indicator lights and warning lights

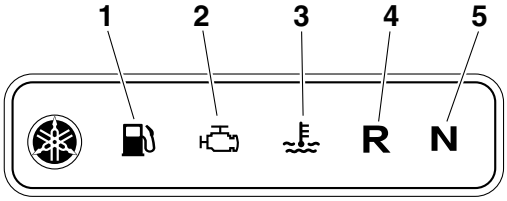

1. Fuel level warning light "⛽"
2. Engine trouble warning light "🔧"
3. Coolant temperature warning light "🌡"
4. Reverse indicator light "R"
5. Neutral indicator light "N"

Fuel level warning light "⛽"
This warning light comes on when the fuel level drops below approximately 2.9 L (0.77 US gal, 0.64 Imp.gal). When this occurs, refuel as soon as possible.
The electrical circuit of the warning light can be checked by setting the engine stop switch to "◯" and turning the main switch to "ON". The warning light should come on for a few seconds, and then go off.If the warning light does not come on initially when the main switch is turned to "ON", or if the warning light remains on, check the electrical circuit.

Engine trouble warning light "🔧"
This warning light comes on or flashes when an electrical circuit monitoring the engine is not working correctly. When this occurs, check the self-diagnosis system.
The electrical circuit of the warning light can be checked by turning the main switch to "ON". The warning light should come on for a few seconds, and then go off.
If the warning light does not come on initially when the main switch is turned to "ON", or if the warning light remains on, check the electrical circuit.

Coolant temperature warning light "🌡"
This warning light comes on when the engine overheats. When this occurs during operation, stop the engine as soon as it is safe to do so and allow it to cool down for about 10 minutes.
The electrical circuit of the warning light can be checked by turning the main switch to "ON". The warning light should come on for a few seconds, and then go off.
If the warning light does not come on initially when the main switch is turned to "ON", or if the warning light remains on, check the electrical circuit.

ECA1PE1002
NOTICE

- **The engine may overheat if the ATV is overloaded. In this case, reduce the load to specification.**
- **Start the engine after making sure that the warning light is out. Continuous use while the warning light is on may cause damage to the engine.**

Reverse indicator light "R"
This indicator light comes on when the transmission is in the reverse position.

Neutral indicator light "N"
This indicator light comes on when the transmission is in the neutral position.

EAS20180
IMPORTANT INFORMATION

EAS20190
PREPARATION FOR REMOVAL AND DISASSEMBLY

1. Before removal and disassembly, remove all dirt, mud, dust and foreign material.

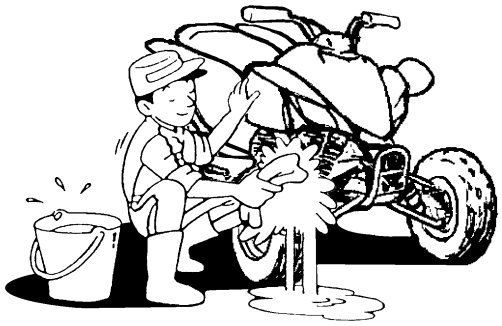

2. Use only the proper tools and cleaning equipment.
   Refer to “SPECIAL TOOLS” on page 1-12.
3. When disassembling, always keep mated parts together. This includes gears, cylinders, pistons and other parts that have been “mated” through normal wear. Mated parts must always be reused or replaced as an assembly.

4. During disassembly, clean all of the parts and place them in trays in the order of disassembly. This will speed up assembly and allow for the correct installation of all parts.
5. Keep all parts away from any source of fire.

EAS20200
REPLACEMENT PARTS

Use only genuine Yamaha parts for all replacements. Use oil and grease recommended by Yamaha for all lubrication jobs. Other brands may be similar in function and appearance, but inferior in quality.

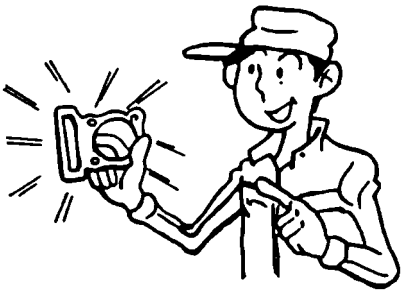

EAS20210
GASKETS, OIL SEALS AND O-RINGS

1. When overhauling the engine, replace all gaskets, seals and O-rings. All gasket surfaces, oil seal lips and O-rings must be cleaned.
2. During reassembly, properly oil all mating parts and bearings and lubricate the oil seal lips with grease.

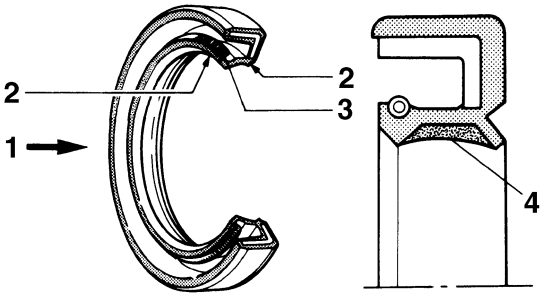

1. Oil
2. Lip
3. Spring
4. Grease

EAS20220
LOCK WASHERS/PLATES AND COTTER PINS

After removal, replace all lock washers/plates “1” and cotter pins. After the bolt or nut has been tightened to specification, bend the lock tabs along a flat of the bolt or nut.

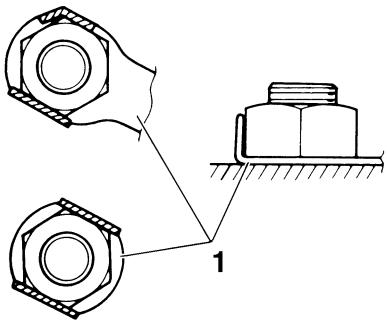

EAS20230

BEARINGS AND OIL SEALS

Install bearings “1” and oil seals “2” so that the manufacturer marks or numbers are visible. When installing oil seals “2”, lubricate the oil seal lips with a light coat of lithium-soap-based grease. Oil bearings liberally when installing, if appropriate.

ECA13300

NOTICE

Do not spin the bearing with compressed air because this will damage the bearing surfaces.

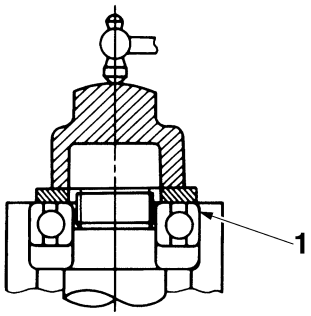

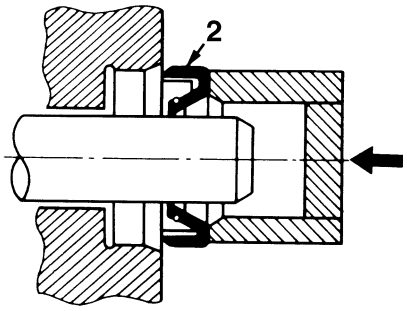

EAS20240

CIRCLIPS

Before reassembly, check all circlips carefully and replace damaged or distorted circlips. Always replace piston pin clips after one use. When installing a circlip “1”, make sure the sharp-edged corner “2” is positioned opposite the thrust “3” that the circlip receives.

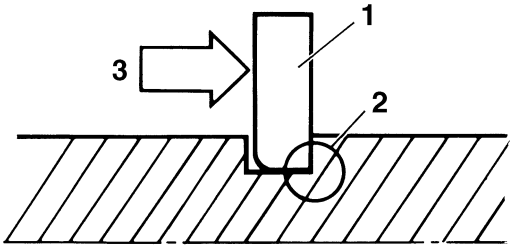

EAS2LS1001

RUBBER PARTS

Check rubber parts for deterioration during inspection. Some of the rubber parts are sensitive to gasoline, flammable oil, grease, etc. Do not allow any items other than the specified one to contact the parts.

EAS30380
BASIC SERVICE INFORMATION

EAS30390
QUICK FASTENERS

Rivet type
1. Remove:
   - Quick fastener

TIP

To remove the quick fastener, push its pin with a screwdriver, then pull the fastener out.

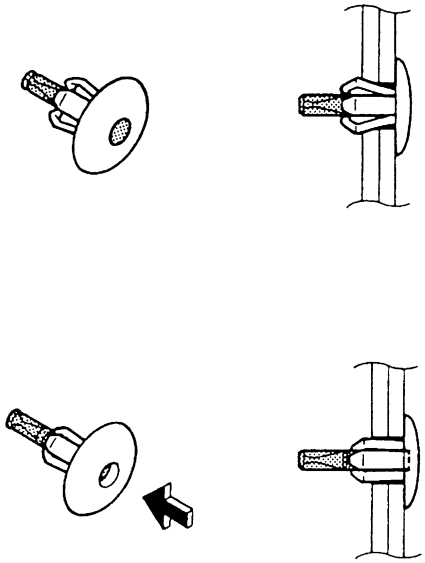

2. Install:
   - Quick fastener

TIP

To install the quick fastener, push its pin so that it protrudes from the fastener head, then insert the fastener into the part to be secured and push the pin in with a screwdriver. Make sure that the pin is flush with the fastener's head.

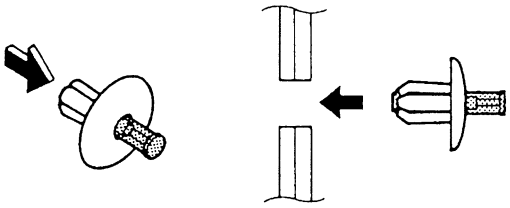

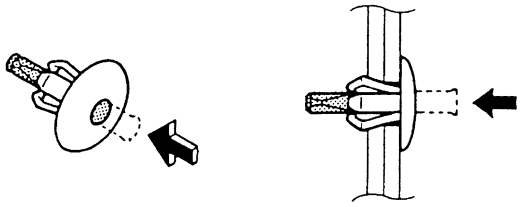

Screw type
1. Remove:
   - Quick fastener

TIP

To remove the quick fastener, loosen the screw with a screwdriver, then pull the fastener out.

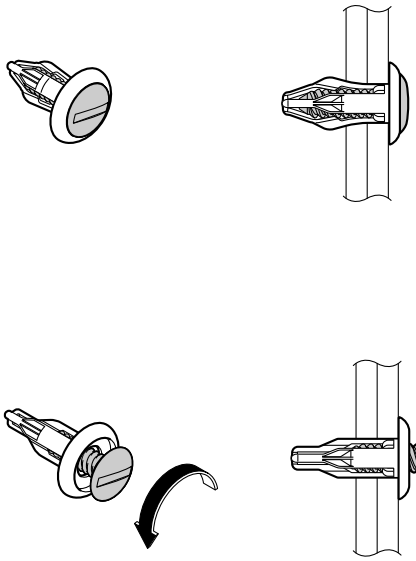

2. Install:
   - Quick fastener

TIP

To install the quick fastener, insert the fastener into the part to be secured and tighten the screw.

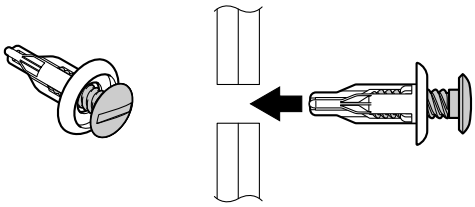

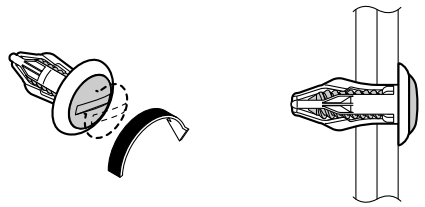

EAS30402

ELECTRICAL SYSTEM

Electrical parts handling

ECA16600

NOTICE

Never disconnect a battery lead while the engine is running; otherwise, the electrical components could be damaged.

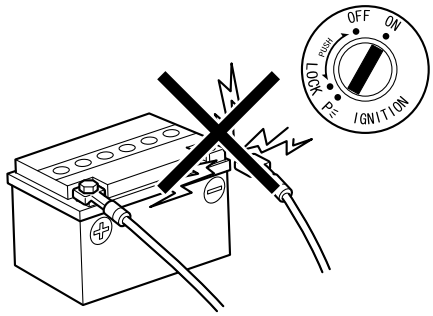

ECA16751

NOTICE

When disconnecting the battery leads from the battery, be sure to disconnect the negative battery lead first, then the positive battery lead. If the positive battery lead is disconnected first and a tool or similar item contacts the vehicle, a spark could be generated, which is extremely dangerous.

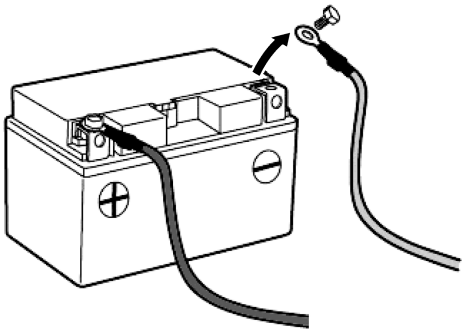

TIP

If a battery lead is difficult to disconnect due to rust on the battery terminal, remove the rust using hot water.

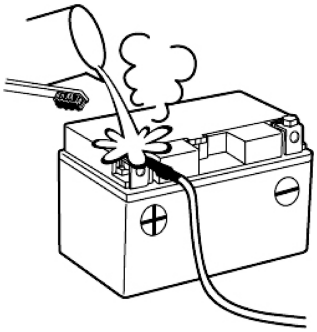

ECA16760

NOTICE

Be sure to connect the battery leads to the correct battery terminals. Reversing the battery lead connections could damage the electrical components.

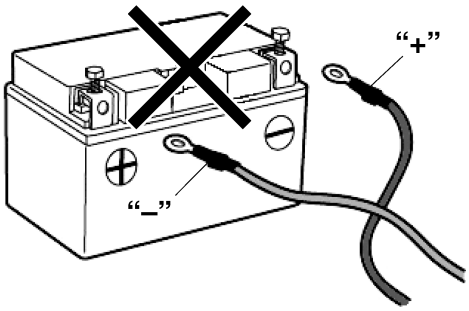

ECA16771

NOTICE

When connecting the battery leads to the battery, be sure to connect the positive battery lead first, then the negative battery lead. If the negative battery lead is connected first and a tool or similar item contacts the vehicle while the positive battery lead is being connected, a spark could be generated, which is extremely dangerous.

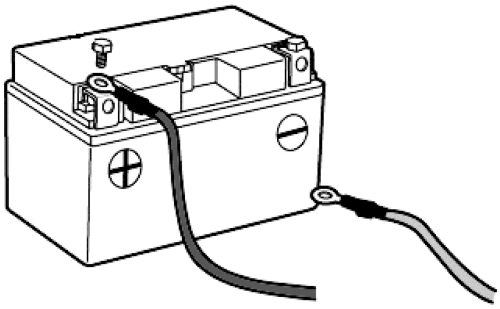

ECA16610

NOTICE

Turn the main switch to "OFF" before disconnecting or connecting an electrical component.

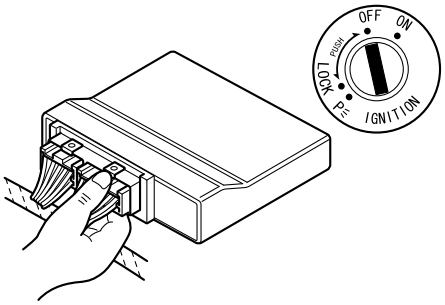

ECA16620

NOTICE

Handle electrical components with special care, and do not subject them to strong shocks.

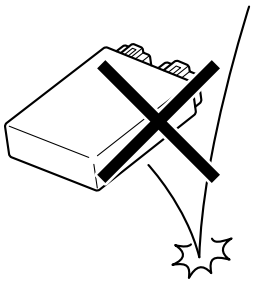

ECA16630

NOTICE

Electrical components are very sensitive to and can be damaged by static electricity. Therefore, never touch the terminals and be sure to keep the contacts clean.

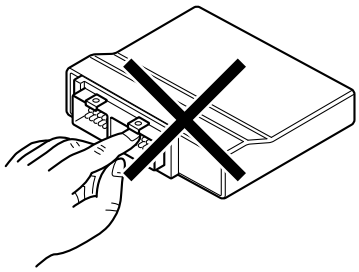

TIP

When resetting the ECU by turning the main switch to “OFF”, be sure to wait approximately 5 seconds before turning the main switch back to “ON”.

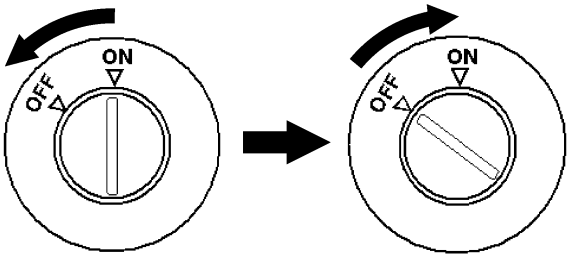

Checking the electrical system

TIP

Before checking the electrical system, make sure that the battery voltage is at least 12 V.

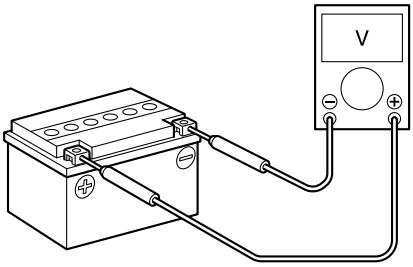

ECA14371

NOTICE

Never insert the tester probes into the coupler terminal slots. Always insert the probes from the opposite end “a” of the coupler, taking care not to loosen or damage the leads.

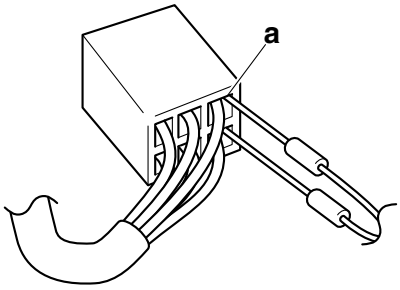

ECA16640

NOTICE

For waterproof couplers, never insert the tester probes directly into the coupler. When performing any checks using a waterproof coupler, use the specified test harness or a suitable commercially available test harness.

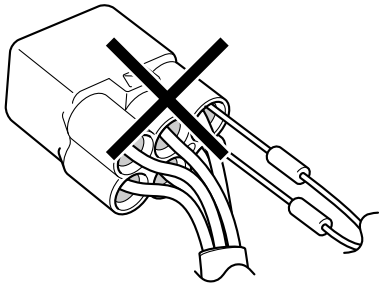

Checking the connections

Check the leads, couplers, and connectors for stains, rust, moisture, etc.

1. Disconnect:
   - Lead
   - Coupler
   - Connector

ECA16780

NOTICE

- **When disconnecting a coupler, release the coupler lock, hold both sections of the coupler securely, and then disconnect the coupler.**
- **There are many types of coupler locks; therefore, be sure to check the type of coupler lock before disconnecting the coupler.**

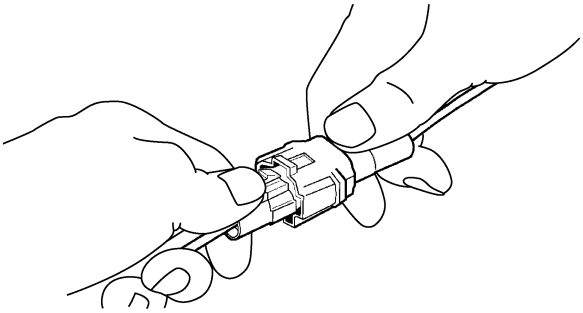

ECA16790

NOTICE

When disconnecting a connector, do not pull the leads. Hold both sections of the connector securely, and then disconnect the connector.

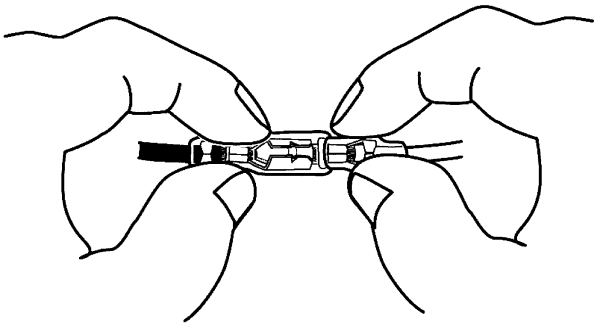

2. Check:
   - Lead
   - Coupler
   - Connector

   Moisture → Dry with an air blower.
   Rust/stains → Connect and disconnect several times.

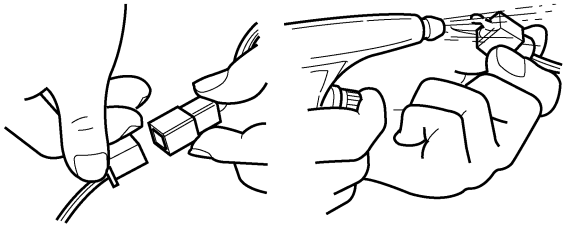

3. Check:
   - All connections

   Loose connection → Connect properly.

TIP

- If the pin “1” on the terminal is flattened, bend it up.
- After disassembling and assembling a coupler, pull on the leads to make sure that they are installed securely.

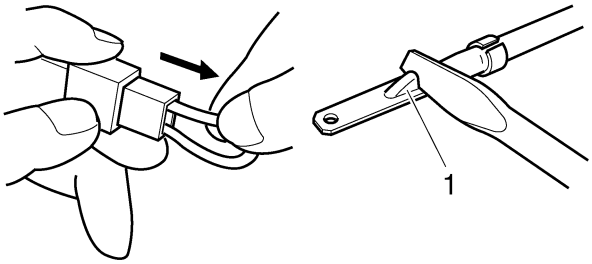

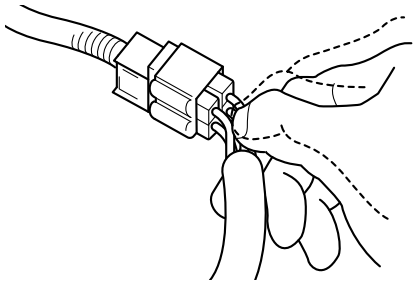

4. Connect:
   - Lead
   - Coupler
   - Connector

TIP

- When connecting a coupler or connector, push both sections of the coupler or connector together until they are connected securely.
- Make sure all connections are tight.

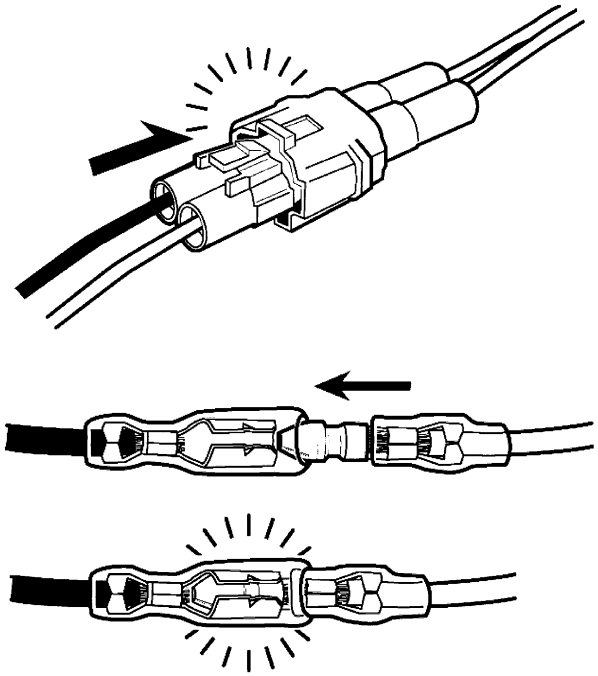

5. Check:
   - Continuity
     (with the pocket tester)

Pocket tester
90890-03112
Analog pocket tester
YU-03112-C

TIP

- If there is no continuity, clean the terminals.
- When checking the wire harness, perform steps (1) to (3).
- As a quick remedy, use a contact revitalizer available at most part stores.

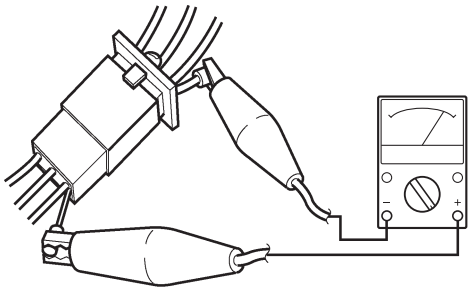

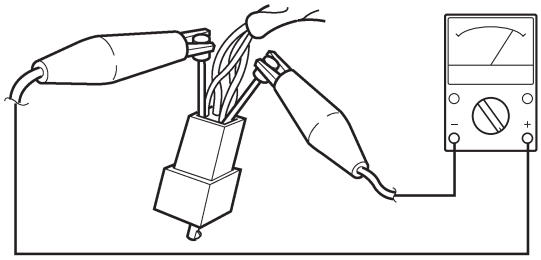

6. Check:
   - Resistance

Pocket tester
90890-03112
Analog pocket tester
YU-03112-C

TIP

The resistance values shown were obtained at the standard measuring temperature of 20 °C (68 °F). If the measuring temperature is not 20 °C (68 °F), the specified measuring conditions will be shown.

Intake air temperature sensor resistance
5.40–6.60 kΩ at 0 °C (32 °F)
290–390 Ω at 80 °C (176 °F)

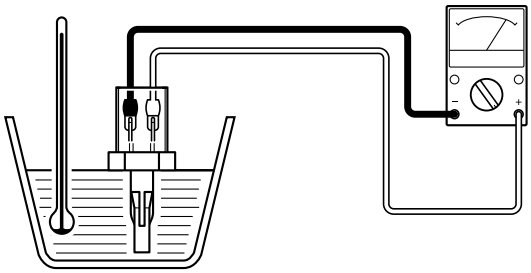

EAS20260

SPECIAL TOOLS

The following special tools are necessary for complete and accurate tune-up and assembly. Use only the appropriate special tools as this will help prevent damage caused by the use of inappropriate tools or improvised techniques. Special tools, part numbers or both may differ depending on the country. When placing an order, refer to the list provided below to avoid any mistakes.

TIP

- For U.S.A. and Canada, use part number starting with “YM-”, “YU-”, or “ACC-”.
- For others, use part number starting with “90890-”.

Tool name/Tool No.	Illustration	Reference pages
Slide hammer bolt 90890-01083 Slide hammer bolt 6 mm YU-01083-1	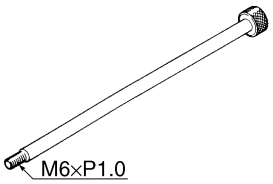	5-15, 5-17
Weight 90890-01084 Weight YU-01083-3	90890-01084 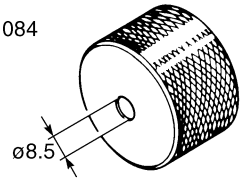 YU-01083-3 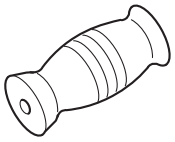	5-15
Crankcase separating tool 90890-01135 Crankcase separator YU-01135-B	90890-01135 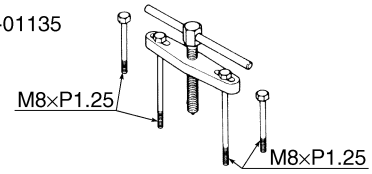 YU-01135-B 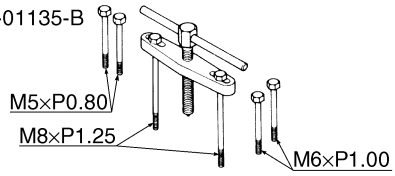	5-63
Valve spring compressor attachment 90890-01243 Valve spring compressor adapter (26 mm) YM-01253-1	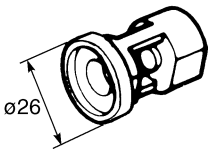	5-20, 5-25
Ring nut wrench 90890-01268 Spanner wrench YU-01268	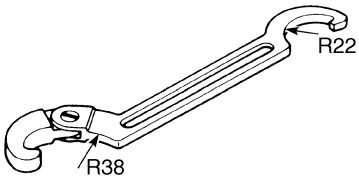	3-27, 3-30

Tool name/Tool No.	Illustration	Reference pages
Crankshaft installer pot 90890-01274 Installing pot YU-90058	90890-01274 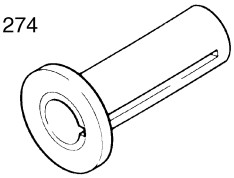 YU-90058/YU-90059 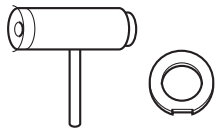	5-63
Crankshaft installer bolt 90890-01275 Bolt YU-90060	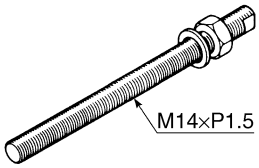	5-63
Piston pin puller set 90890-01304 Piston pin puller YU-01304	90890-01304 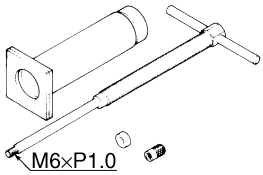 YU-01304 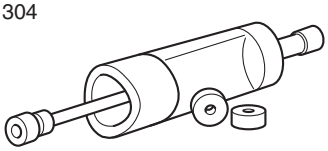	5-27
Spacer 90890-01309 Pot spacer YU-90059	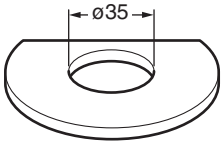	5-63
Tappet adjusting tool 90890-01311 Six piece tappet set YM-A5970	90890-01311 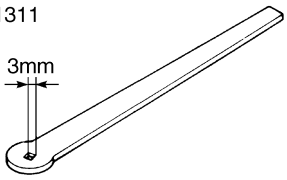 YM-A5970 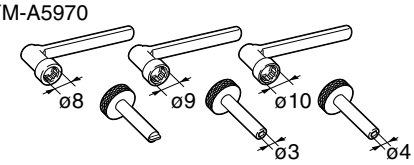	3-5

Tool name/Tool No.	Illustration	Reference pages
Radiator cap tester 90890-01325 Mityvac cooling system tester kit YU-24460-A	90890-01325 ø38 YU-24460-A	6-2
Damper rod holder (30 mm) 90890-01327 Damper rod holder (30 mm) YM-01327		4-47, 4-47
Radiator cap tester adapter 90890-01352 Pressure tester adapter YU-33984	90890-01352 ø31.4 ø38 ø41 ø28 YU-33984	6-2
Flywheel puller 90890-01404 Flywheel puller YM-01404	M35×P1.5	5-33
Steering nut wrench 90890-01443 Spanner wrench YU-33975	R25	3-28, 3-30
Ball joint remover 90890-01474 Ball joint remover YM-01474		4-53

Tool name/Tool No.	Illustration	Reference pages
Ball joint remover attachment set 90890-01480 Ball joint adapter set YM-01480	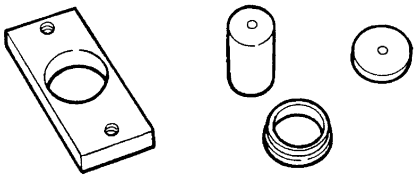	4-53
Axle nut wrench (46 mm) 90890-01498 Rear axle nut wrench 46 mm YM-37134	90890-01498 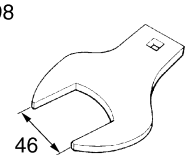 YM-37134 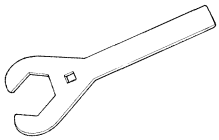	4-14, 4-15
Sheave holder 90890-01701 Primary clutch holder YS-01880-A	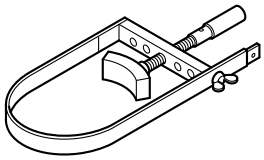	5-33, 5-35
Compression gauge 90890-03081 Engine compression tester YU-33223	90890-03081 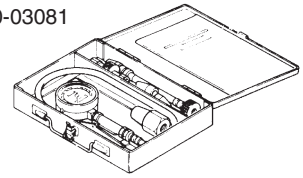 YU-33223 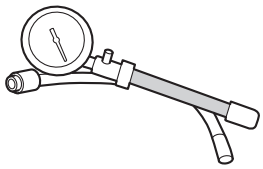	3-8
Pocket tester 90890-03112 Analog pocket tester YU-03112-C	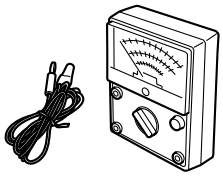	1-11, 1-11, 5-38, 8-63, 8-64, 8-64, 8-65, 8-69, 8-70, 8-70, 8-71, 8-71, 8-72, 8-72, 8-73, 8-73, 8-74, 8-74, 8-75, 8-76, 8-76, 8-77, 8-77, 8-77

Tool name/Tool No.	Illustration	Reference pages
Pressure gauge 90890-03153 Pressure gauge YU-03153	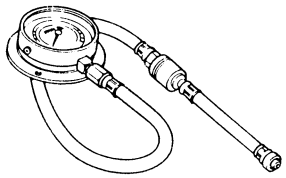	7-7
Digital circuit tester 90890-03174 Model 88 Multimeter with tachometer YU-A1927	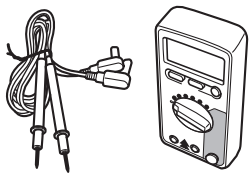	7-8
Fuel pressure adapter 90890-03176 Fuel pressure adapter YM-03176	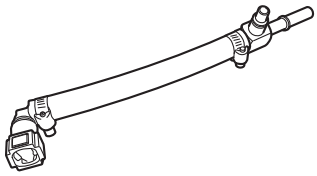	7-7
Yamaha diagnostic tool (US) 90890-03234	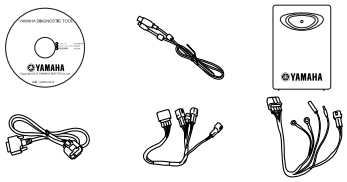	8-34
Valve spring compressor 90890-04019 Valve spring compressor YM-04019	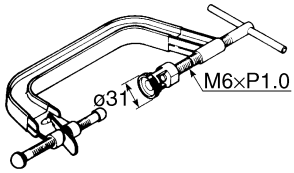	5-20, 5-25
Middle driven shaft bearing driver 90890-04058 Middle drive bearing installer 40 & 50 mm YM-04058	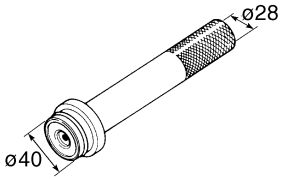	6-7
Valve guide remover (ø6) 90890-04064 Valve guide remover (6.0 mm) YM-04064-A	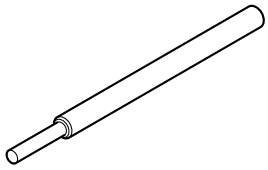	5-21
Valve guide installer (ø6) 90890-04065 Valve guide installer (6.0 mm) YM-04065-A	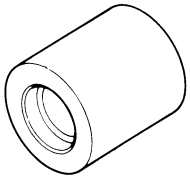	5-21
Valve guide reamer (ø6) 90890-04066 Valve guide reamer (6.0 mm) YM-04066	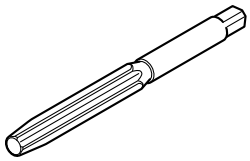	5-21

Tool name/Tool No.	Illustration	Reference pages
Spacer (crankshaft installer) 90890-04081 Pot spacer YM-91044	90890-04081 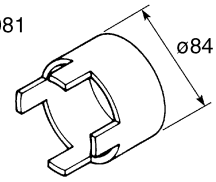 YM-91044 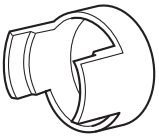	5-63
Extension 90890-04082	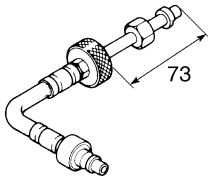 	3-8
Universal clutch holder 90890-04086 Universal clutch holder YM-91042	90890-04086 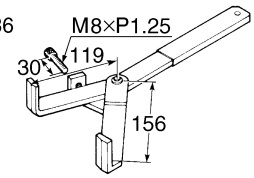 YM-91042 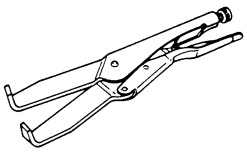	5-44, 5-48
Adapter (M16) 90890-04130 Adapter #13 YM-04059	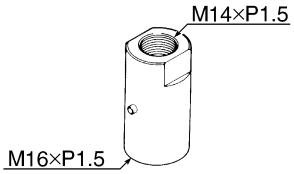 	5-63
Mechanical seal installer 90890-04132 Water pump seal installer YM-33221-A	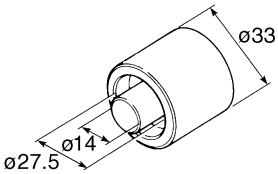 	6-7
Ignition checker 90890-06754 Oppama pet–4000 spark checker YM-34487	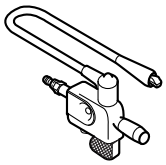	8-71

Tool name/Tool No.	Illustration	Reference pages
Yamaha bond No. 1215 90890-85505 (Three bond No.1215®)	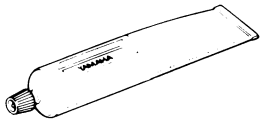	5-35, 5-60

SPECIFICATIONS

EAS29110

GENERAL SPECIFICATIONS

Model	
Model	YFM700RF 2LS1 YFM700RSF B461
Dimensions	
Overall length	1845 mm (72.6 in)
Overall width	1155 mm (45.5 in)
Overall height	1115 mm (43.9 in)
Seat height	830 mm (32.7 in)
Wheelbase	1280 mm (50.4 in)
Ground clearance	240 mm (9.4 in)
Minimum turning radius	3500 mm (138 in)
Weight	
Curb weight	192.0 kg (423 lb)
Maximum loading limit	100.0 kg (220 lb)

EAS29120

ENGINE SPECIFICATIONS

Engine	
Engine type	Liquid cooled 4-stroke, SOHC
Displacement	686.0 cm^3
Cylinder arrangement	Single cylinder
Bore × stroke	102.0 × 84.0 mm (4.02 × 3.31 in)
Compression ratio	10.0 : 1
Standard compression pressure (at sea level)	570 kPa (5.7 kgf/cm^2, 81.1 psi)
Minimum-maximum	500–640 kPa (5.0–6.4 kgf/cm^2, 71.1–91.0 psi)
Starting system	Electric starter
Fuel	
Recommended fuel	Regular unleaded gasoline only
Fuel tank capacity	11.0 L (2.91 US gal, 2.42 Imp.gal)
Fuel reserve amount	2.9 L (0.77 US gal, 0.64 Imp.gal)
Engine oil	
Lubrication system	Dry sump
Recommended brand	YAMALUBE
Type	SAE 5W-30, 10W-30, 10W-40, 15W-40, 20W-40 or 20W-50
Recommended engine oil grade	API service SG type or higher, JASO standard MA
Engine oil quantity	
Total amount	2.30 L (2.43 US qt, 2.02 Imp.qt)
Without oil filter element replacement	1.75 L (1.85 US qt, 1.54 Imp.qt)
With oil filter element replacement	1.85 L (1.96 US qt, 1.63 Imp.qt)
Oil pressure (hot)	40.0 kPa/1600 r/min (0.40 kgf/cm^2/1600 r/min, 5.7 psi/1600 r/min)
Oil filter	
Oil filter type	Paper
Oil pump	
Oil pump type	Trochoid
Inner-rotor-to-outer-rotor-tip clearance	0.12 mm (0.0047 in)
Limit	0.20 mm (0.0079 in)
Outer-rotor-to-oil-pump-housing clearance	0.090–0.150 mm (0.0035–0.0059 in)
Limit	0.22 mm (0.0087 in)
Bypass valve opening pressure	40.0–80.0 kPa (0.40–0.80 kgf/cm^2, 5.7–11.4 psi)
Pressure check location	Element cover
Cooling system	
Radiator capacity (including all routes)	1.68 L (1.78 US qt, 1.48 Imp.qt)
Coolant reservoir capacity (up to the maximum level mark)	0.25 L (0.26 US qt, 0.22 Imp.qt)
From low to full level	0.15 L (0.16 US qt, 0.13 Imp.qt)
Radiator cap opening pressure	107.9–137.3 kPa (1.1–1.4 kgf/cm^2, 15.6–19.9 psi)
Thermostat	
Valve opening temperature	69–73°C (156.2–163.4°F)

Valve full open temperature	85°C (185°F)
Valve lift (full open)	8.0 mm (0.31 in)
Radiator core	
Width	198.0 mm (7.80 in)
Height	300.0 mm (11.81 in)
Depth	24.0 mm (0.94 in)
Water pump	
Water pump type	Single suction centrifugal pump
Reduction ratio	27/28 (0.964)
Impeller shaft tilt limit	0.15 mm (0.006 in)

Spark plug

Manufacturer/model	NGK/CR8E
Spark plug gap	0.7–0.8 mm (0.028–0.031 in)

Cylinder head

Combustion chamber volume	57.60–61.20 cm³ (3.51–3.73 cu.in)
Warpage limit	0.03 mm (0.0012 in)

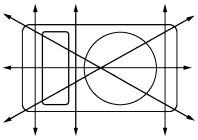

Camshaft

Drive system	Chain drive (left)
Camshaft lobe dimensions	
Intake A	43.300–43.400 mm (1.7047–1.7087 in)
Limit	43.200 mm (1.7008 in)
Intake B	37.026–37.126 mm (1.4577–1.4617 in)
Limit	36.926 mm (1.4538 in)
Exhaust A	43.129–43.229 mm (1.6980–1.7019 in)
Limit	43.029 mm (1.6941 in)
Exhaust B	37.057–37.157 mm (1.4589–1.4629 in)
Limit	36.957 mm (1.4550 in)

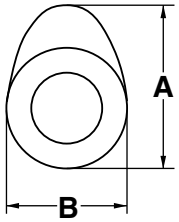

Camshaft runout limit	0.030 mm (0.0012 in)

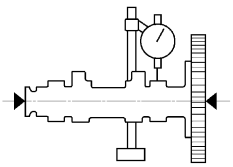

Timing chain

Tensioning system	Automatic

Rocker arm/rocker arm shaft	
Rocker arm inside diameter	12.000–12.018 mm (0.4724–0.4731 in)
Rocker arm shaft outside diameter	11.981–11.991 mm (0.4717–0.4721 in)
Rocker-arm-to-rocker-arm-shaft clearance	0.009–0.037 mm (0.0004–0.0015 in)
Valve, valve seat, valve guide	
Valve clearance (cold)	
Intake	0.09–0.13 mm (0.0035–0.0051 in)
Exhaust	0.16–0.20 mm (0.0063–0.0079 in)
Valve dimensions	
Valve head diameter (intake)	37.90–38.10 mm (1.4921–1.5000 in)
Valve head diameter (exhaust)	31.90–32.10 mm (1.2559–1.2638 in)
Valve seat contact width (intake)	1.00–1.20 mm (0.0394–0.0472 in)
Limit	1.6 mm (0.063 in)
Valve seat contact width (exhaust)	1.00–1.20 mm (0.0394–0.0472 in)
Limit	1.6 mm (0.063 in)
Valve stem diameter (intake)	5.975–5.990 mm (0.2352–0.2358 in)
Limit	5.945 mm (0.2341 in)
Valve stem diameter (exhaust)	5.960–5.975 mm (0.2346–0.2352 in)
Limit	5.930 mm (0.2335 in)
Valve guide inside diameter (intake)	6.000–6.012 mm (0.2362–0.2367 in)
Limit	6.050 mm (0.2382 in)
Valve guide inside diameter (exhaust)	6.000–6.012 mm (0.2362–0.2367 in)
Limit	6.050 mm (0.2382 in)
Valve-stem-to-valve-guide clearance (intake)	0.010–0.037 mm (0.0004–0.0015 in)
Limit	0.080 mm (0.0031 in)
Valve-stem-to-valve-guide clearance (exhaust)	0.025–0.052 mm (0.0010–0.0020 in)
Limit	0.100 mm (0.0039 in)
Valve stem runout	0.010 mm (0.0004 in)

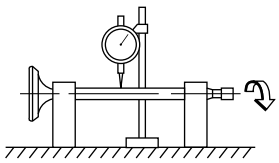

Cylinder head valve seat width (intake)	1.00–1.20 mm (0.0394–0.0472 in)
Limit	1.6 mm (0.063 in)
Cylinder head valve seat width (exhaust)	1.00–1.20 mm (0.0394–0.0472 in)
Limit	1.6 mm (0.063 in)
Valve spring	
Free length (intake)	38.79 mm (1.53 in)
Limit	36.85 mm (1.45 in)
Free length (exhaust)	38.79 mm (1.53 in)
Limit	36.85 mm (1.45 in)
Installed length (intake)	35.00 mm (1.38 in)
Installed length (exhaust)	35.00 mm (1.38 in)
Spring rate K1 (intake)	48.55 N/mm (4.95 kgf/mm, 277.22 lbf/in)
Spring rate K2 (intake)	63.02 N/mm (6.43 kgf/mm, 359.84 lbf/in)
Spring rate K1 (exhaust)	48.55 N/mm (4.95 kgf/mm, 277.22 lbf/in)
Spring rate K2 (exhaust)	63.02 N/mm (6.43 kgf/mm, 359.84 lbf/in)

Installed compression spring force (intake)	169.00–199.00 N (17.23–20.29 kgf, 37.99–44.73 lbf)
Installed compression spring force (exhaust)	169.00–199.00 N (17.23–20.29 kgf, 37.99–44.73 lbf)
Spring tilt (intake)	2.5°/1.70 mm (2.5°/0.07 in)
Spring tilt (exhaust)	2.5°/1.70 mm (2.5°/0.07 in)

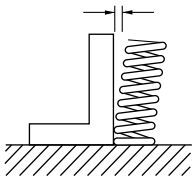

Winding direction (intake)	Clockwise
Winding direction (exhaust)	Clockwise

Cylinder

Bore	102.000–102.010 mm (4.0157–4.0161 in)
Wear limit	102.080 mm (4.0189 in)
Taper limit	0.05 mm (0.002 in)
Out of round limit	0.05 mm (0.002 in)

Piston

Piston-to-cylinder clearance	0.030–0.055 mm (0.0012–0.0022 in)
Limit	0.13 mm (0.0051 in)
Diameter D	101.955–101.970 mm (4.0140–4.0146 in)
Height H	10.0 mm (0.39 in)

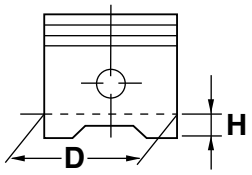

Offset	0.50 mm (0.0197 in)
Offset direction	Intake side
Piston pin bore inside diameter	23.004–23.015 mm (0.9057–0.9061 in)
Limit	23.045 mm (0.9073 in)
Piston pin outside diameter	22.991–23.000 mm (0.9052–0.9055 in)
Limit	22.971 mm (0.9044 in)
Piston-pin-to-piston-pin-bore clearance	0.004–0.024 mm (0.0002–0.0009 in)
Limit	0.074 mm (0.0029 in)

Piston ring

Top ring	
Ring type	Barrel
Dimensions (B × T)	1.20 × 3.80 mm (0.05 × 0.15 in)

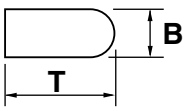

End gap (installed)	0.20–0.35 mm (0.008–0.014 in)
Limit	0.60 mm (0.024 in)
Ring side clearance	0.030–0.070 mm (0.0012–0.0028 in)
Limit	0.12 mm (0.0047 in)
2nd ring	
Ring type	Taper
Dimensions (B × T)	1.20 × 4.00 mm (0.05 × 0.16 in)

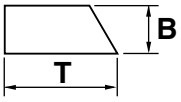

End gap (installed)	0.75–0.90 mm (0.03–0.04 in)
Limit	1.25 mm (0.0492 in)
Ring side clearance	0.030–0.070 mm (0.0012–0.0028 in)
Limit	0.13 mm (0.0051 in)
Oil ring	
Dimensions (B × T)	2.50 × 2.80 mm (0.10 × 0.11 in)

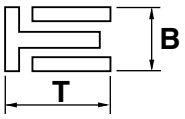

End gap (installed)	0.20–0.70 mm (0.01–0.03 in)

Crankshaft

Width A	74.95–75.00 mm (2.951–2.953 in)
Runout limit C	0.030 mm (0.0012 in)
Big end side clearance D	0.350–0.650 mm (0.0138–0.0256 in)
Limit	1.00 mm (0.040 in)
Big end radial clearance E	0.010–0.025 mm (0.0004–0.0010 in)
Small end free play F	0.16–0.40 mm (0.01–0.02 in)

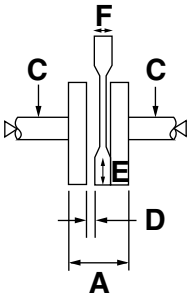

Balancer

Balancer drive method	Gear

Clutch

Clutch type	Wet, multiple-disc
Clutch release method	Outer pull, rack and pinion pull
Operation	Left hand operation
Clutch lever free play (lever end)	8.0–13.0 mm (0.31–0.51 in)
Friction plate 1 thickness	2.92–3.08 mm (0.11–0.12 in)
Wear limit	2.82 mm (0.111 in)
Plate quantity	7 pcs

Friction plate 2 thickness	2.90–3.10 mm (0.11–0.12 in)
Wear limit	2.8 mm (0.11 in)
Plate quantity	1 pcs
Clutch plate thickness	1.50–1.60 mm (0.059–0.063 in)
Plate quantity	7 pcs
Warpage limit	0.20 mm (0.0079 in)
Clutch spring free length	50.0 mm (1.97 in)
Minimum length	48.0 mm (1.89 in)
Spring quantity	6 pcs
Transmission	
Transmission type	Constant mesh 5-speed.forward, 1-speed.reverse
Primary reduction system	Spur gear
Primary reduction ratio	77/34 (2.265)
Secondary reduction system	Chain drive
Secondary reduction ratio	38/14 (2.714)
Operation	Left foot operation
Gear ratio	
1st	38/13 (2.923)
2nd	28/14 (2.000)
3rd	25/17 (1.471)
4th	25/22 (1.136)
5th	22/24 (0.917)
Reverse gear	24/13 × 29/12 (4.462)
Main axle runout limit	0.08 mm (0.0031 in)
Drive axle runout limit	0.08 mm (0.0031 in)
Shifting mechanism	
Shift mechanism type	Shift drum and guide bar
Shift fork thickness	5.76–5.89 mm (0.2268–0.2319 in)
Reverse knob free play	2.0–4.0 mm (0.08–0.16 in)
Decompression device	
Device type	Auto decomp
Air filter	
Air filter element	Wet element
Air filter oil grade	Foam air filter oil
Fuel pump	
Pump type	Electrical
Maximum consumption amperage	4.8 A
Output pressure	324 kPa (3.24 kgf/cm², 46.1 psi)
Throttle body	
Type/quantity	44EHS/1
Manufacturer	MIKUNI
ID mark	1S3H 10
Throttle valve size	#50
Fuel injector	
Model/quantity	297500–0390/1

Manufacturer	DENSO
Idling condition	
Engine idling speed	1500–1700 r/min
CO% (air induction system ON)	1.0 %
CO% (air induction system OFF)	1.5-8.5 %
Intake vacuum	33.0 kPa (248 mmHg, 9.7 inHg)
Water temperature	80 °C (176 °F)
Oil temperature	55–65 °C (131–149 °F)
Throttle lever free play	2.0–4.0 mm (0.08–0.16 in)
Speed limiter length	Less than 12 mm (0.47 in)

EAS29130

CHASSIS SPECIFICATIONS

Chassis	
Frame type	Aluminum die-cast and steel tube frame
Caster angle	5.0°
Camber angle	-1.0°
Kingpin angle	14.8°
Kingpin offset	5.2 mm (0.20 in)
Trail	22.0 mm (0.87 in)
Tread rear (STD)	900.0 mm (35.43 in)
Tread front (STD)	940.0 mm (37.01 in)
Toe-in (with tires touching the ground)	2.0–12.0 mm (0.08–0.47 in)
Front wheel	
Wheel type	Panel wheel
Rim size	10 × 5.5AT
Wheel material	Aluminum
Wheel travel	230 mm (9.1 in)
Radial wheel runout limit	2.0 mm (0.08 in)
Lateral wheel runout limit	2.0 mm (0.08 in)
Rear wheel	
Wheel type	Panel wheel
Rim size	9 × 8.0AT
Wheel material	Aluminum
Wheel travel	256 mm (10.1 in)
Radial wheel runout limit	2.0 mm (0.08 in)
Lateral wheel runout limit	2.0 mm (0.08 in)
Front tire	
Type	Tubeless
Size	AT22 × 7–10
Manufacturer/model	MAXXIS/MS13 Bias
Wear limit (front)	3 mm (0.12 in)
Rear tire	
Type	Tubeless
Size	AT20 × 10–9
Manufacturer/model	MAXXIS/M976Y Bias
Wear limit (rear)	3 mm (0.12 in)
Tire air pressure (measured on cold tires)	
Recommended	
Front	27.5 kPa (0.275 kgf/cm², 4.0 psi)
Rear	27.5 kPa (0.275 kgf/cm², 4.0 psi)
Minimum	
Front	24.5 kPa (0.245 kgf/cm², 3.6 psi)
Rear	24.5 kPa (0.245 kgf/cm², 3.6 psi)
Front brake	
Type	Disc brake
Operation	Right hand operation

Front disc brake	
Disc outside diameter × thickness	161.0 × 3.5 mm (6.34 × 0.14 in)
Brake disc thickness limit	3.0 mm (0.12 in)
Brake disc deflection limit	0.15 mm (0.006 in)
Brake pad lining thickness (inner)	4.3 mm (0.17 in)
Limit	1.0 mm (0.04 in)
Brake pad lining thickness (outer)	4.3 mm (0.17 in)
Limit	1.0 mm (0.04 in)
Master cylinder inside diameter	12.70 mm (0.50 in)
Caliper cylinder inside diameter	25.40 mm (1.00 in)
Specified brake fluid	DOT 4
Rear brake	
Type	Disc brake
Operation	Right foot operation
Brake pedal position (from footrest)	15.3 mm (0.60 in)
Rear disc brake	
Disc outside diameter × thickness	200.0 × 4.0 mm (7.87 × 0.16 in)
Brake disc thickness limit	3.5 mm (0.14 in)
Brake disc deflection limit	0.15 mm (0.006 in)
Brake pad lining thickness (inner)	5.4 mm (0.21 in)
Limit	1.0 mm (0.04 in)
Brake pad lining thickness (outer)	5.4 mm (0.21 in)
Limit	1.0 mm (0.04 in)
Master cylinder inside diameter	12.70 mm (0.50 in)
Caliper cylinder inside diameter	25.40 mm × 2 (1.00 in × 2)
Specified brake fluid	DOT 4
Steering	
Steering bearing type	Ball bearing
Front suspension	
Type	Double wishbone
Spring/shock absorber type	Coil spring/gas-oil damper
Shock absorber travel	115.0 mm (4.53 in) (YFM700RF) 117.0 mm (4.61 in) (YFM700RSF)
Spring free length	269.1 mm (10.59 in) (YFM700RF) 271.5 mm (10.69 in) (YFM700RSF)
Installed length	257.1 mm (10.12 in) (YFM700RF) 262.0 mm (10.31 in) (YFM700RSF)
Spring rate K1	20.00 N/mm (2.04 kgf/mm, 114.20 lb/in) (YFM700RF) 22.00 N/mm (2.24 kgf/mm, 125.62 lb/in) (YFM700RSF)
Spring rate K2	28.00 N/mm (2.86 kgf/mm, 159.88 lb/in) (YFM700RF) 30.00 N/mm (3.06 kgf/mm, 171.30 lb/in) (YFM700RSF)
Optional spring available	No
Spring preload adjusting positions	
Minimum	1 (YFM700RF) 268.0 mm (10.55 in) (YFM700RSF)

Standard	2 (YFM700RF)
	262.0 mm (10.31 in) (YFM700RSF)
Maximum	5 (YFM700RF)
	253.0 mm (9.96 in) (YFM700RSF)
Rebound damping adjusting positions	
Minimum	30 (YFM700RSF)
Standard	18 (YFM700RSF)
Maximum	1 (YFM700RSF)
Compression damping setting (for fast compression damping)	
Minimum	2 (YFM700RSF)
Standard	1.5 (YFM700RSF)
Maximum	0 (YFM700RSF)
Compression damping setting (for slow compression damping)	
Minimum	18 (YFM700RSF)
Standard	9 (YFM700RSF)
Maximum	1 (YFM700RSF)

Rear suspension	
Type	Swingarm (link suspension)
Spring/shock absorber type	Coil spring/gas-oil damper
Rear shock absorber assembly travel	110.0 mm (4.33 in)
Spring free length	252.0 mm (9.92 in)
Installed length	228.5 mm (9.00 in)
Spring rate K1	46.00 N/mm (4.69 kgf/mm, 262.66 lbf/in)
Spring stroke K1	0.0–110.0 mm (0.00–4.33 in)
Optional spring available	No
Spring preload adjusting positions	
Minimum	238.5 mm (9.39 in)
Standard	228.5 mm (9.00 in)
Maximum	223.5 mm (8.80 in)
Rebound damping adjusting positions	
Minimum	30 (YFM700RSF)
Standard	18 (YFM700RSF)
Maximum	1 (YFM700RSF)
Compression damping setting (for fast compression damping)	
Minimum	2 (YFM700RSF)
Standard	1.25 (YFM700RSF)
Maximum	0 (YFM700RSF)
Compression damping setting (for slow compression damping)	
Minimum	18 (YFM700RSF)
Standard	10 (YFM700RSF)
Maximum	1 (YFM700RSF)

Swingarm	
Swingarm end free play limit (radial)	1.0 mm (0.04 in)
Swingarm end free play limit (axial)	1.0 mm (0.04 in)

Drive chain	
Type/manufacturer	520VP2-T/DAIDO
Recommended brand	98
Drive chain slack	25.0–35.0 mm (0.98–1.38 in)
15-link length limit	239.3 mm (9.42 in)

EAS29140

ELECTRICAL SPECIFICATIONS

Voltage	
System voltage	12 V
Ignition system	
Ignition system	TCI
Advancer type	Digital
Ignition timing (B.T.D.C.)	9.0 °/1600 r/min
Engine control unit	
Model/manufacturer	F8T85971/MITSUBISHI
Fuel injection sensor	
Crankshaft position sensor resistance	192.0–288.0 Ω
Intake air pressure sensor output voltage	3.57 – 3.71 V
Intake air temperature sensor resistance	2.21–2.69 Ω
Coolant temperature sensor resistance	2.32–2.59 kΩ at 20°C (68°F) 0.310–0.326 kΩ at 80°C (176°F)
Ignition coil	
Minimum ignition spark gap	6.0 mm (0.24 in)
Primary coil resistance	3.40–4.60 Ω
Secondary coil resistance	10.40–15.60 kΩ
Spark plug cap	
Material	Rubber
Resistance	10.0 kΩ
AC magneto	
Standard output	14.0 V, 17.2 A@5000 r/min
Stator coil resistance	0.248–0.372 Ω (W-W)
Rectifier/regulator	
Regulator type	Semi conductor-short circuit
Regulated voltage (DC)	14.1-14.9 V
Rectifier capacity	25.0 A
Withstand voltage	200.0 V
Battery	
Model	GT9B-4
Voltage, capacity	12 V, 8.0 Ah
Manufacturer	GS BATTERY TAIWAN
Ten hour rate charging current	0.8 A
Headlight	
Bulb type	Krypton bulb
Bulb voltage, wattage × quantity	
Headlight	12 V, 30.0/30.0 W × 2
Tail/brake light	LED

Indicator light	
Neutral indicator light	LED
Fuel level warning light	LED
Reverse indicator light	LED
Coolant temperature warning light	LED
Engine trouble warning light	LED
Electric starting system	
System type	Constant mesh
Starter motor	
Power output	0.80 kW
Armature coil resistance	0.025–0.035 Ω
Brush overall length	12.5 mm (0.49 in)
Limit	5.00 mm (0.20 in)
Brush spring force	7.65–10.01 N (780–1021 gf, 27.54–36.03 oz)
Commutator diameter	28.0 mm (1.10 in)
Limit	27.0 mm (1.06 in)
Mica undercut (depth)	0.70 mm (0.03 in)
Starter relay	
Amperage	180.0 A
Coil resistance	4.18–4.62 Ω
Fuses	
Main fuse	30.0 A
Headlight fuse	10.0 A
Signaling system fuse	10.0 A
Ignition fuse	10.0 A
Radiator fan motor fuse	20.0 A
Fuel injection system fuse	10.0 A
Spare fuse	30.0 A
Spare fuse	20.0 A
Spare fuse	10.0 A

EAS20320
TIGHTENING TORQUES

EAS20330
GENERAL TIGHTENING TORQUE SPECIFICATIONS

This chart specifies tightening torques for standard fasteners with a standard ISO thread pitch. Tightening torque specifications for special components or assemblies are provided for each chapter of this manual. To avoid warpage, tighten multi-fastener assemblies in a crisscross pattern and progressive stages until the specified tightening torque is reached. Unless otherwise specified, tightening torque specifications require clean, dry threads. Components should be at room temperature.

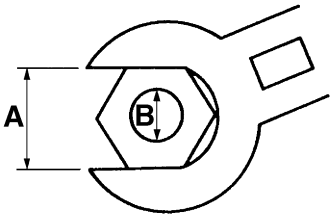

A. Distance between flats
B. Outside thread diameter

A (nut)	B (bolt)	General tightening torques		
		Nm	m·kg	ft·lb
10 mm	6 mm	6	0.6	4.3
12 mm	8 mm	15	1.5	11
14 mm	10 mm	30	3.0	22
17 mm	12 mm	55	5.5	40
19 mm	14 mm	85	8.5	61
22 mm	16 mm	130	13.0	94

EAS20340

ENGINE TIGHTENING TORQUES

Item	Thread size	Q'ty	Tightening torque	Remarks
Cylinder head stud bolt (exhaust pipe)	M8	4	15 Nm (1.5 m·kg, 11 ft·lb)	
Cylinder head bolt	M9	2	35 Nm (3.5 m·kg, 25 ft·lb)	l =135 mm (5.31 in) M
Cylinder head bolt	M9	2	35 Nm (3.5 m·kg, 25 ft·lb)	l =145 mm (5.71 in) M
Cylinder head bolt	M9	2	38 Nm (3.8 m·kg, 27 ft·lb)	l =39 mm (1.54 in) E
Cylinder head bolt	M6	2	10 Nm (1 m·kg, 7.2 ft·lb)	
Reed valve cover bolt	M6	2	10 Nm (1 m·kg, 7.2 ft·lb)	LT
Spark plug	M10	1	13 Nm (1.3 m·kg, 9.4 ft·lb)	
Oil check bolt	M8	1	10 Nm (1 m·kg, 7.2 ft·lb)	
Tappet cover bolt	M6	8	10 Nm (1 m·kg, 7.2 ft·lb)	
Camshaft sprocket cover bolt	M6	2	10 Nm (1 m·kg, 7.2 ft·lb)	
Camshaft sprocket bolt	M7	2	20 Nm (2 m·kg, 14 ft·lb)	
Decompressor assembly bolt	M7	2	20 Nm (2 m·kg, 14 ft·lb)	
Cylinder bolt	M10	4	50 Nm (5 m·kg, 36 ft·lb)	See TIP. E
Cylinder bolt	M6	2	10 Nm (1 m·kg, 7.2 ft·lb)	
Cable guide bolt	M6	1	7 Nm (0.7 m·kg, 5.1 ft·lb)	
Water jacket joint bolt	M6	2	10 Nm (1 m·kg, 7.2 ft·lb)	
AC magneto rotor nut	M16	1	60 Nm (6 m·kg, 43 ft·lb)	E
AC magneto cover bolt	M6	14	10 Nm (1 m·kg, 7.2 ft·lb)	
Balancer driven gear nut	M16	2	60 Nm (6 m·kg, 43 ft·lb)	Use a lock washer. E
Breather plate bolt	M6	3	10 Nm (1 m·kg, 7.2 ft·lb)	
Primary drive gear nut	M20	1	110 Nm (11 m·kg, 80 ft·lb)	Use a lock washer. M
Valve adjusting screw nut	M6	4	14 Nm (1.4 m·kg, 10 ft·lb)	
Camshaft bearing retainer bolt	M6	2	10 Nm (1 m·kg, 7.2 ft·lb)	LT
Timing chain guide bolt (intake side)	M6	2	10 Nm (1 m·kg, 7.2 ft·lb)	

Item	Thread size	Q'ty	Tightening torque	Remarks
Timing chain tensioner cap bolt	M16	1	20 Nm (2 m·kg, 14 ft·lb)	
Timing chain tensioner bolt	M6	2	10 Nm (1 m·kg, 7.2 ft·lb)	
Water pump outlet hose clamp screw	M4	2	2 Nm (0.2 m·kg, 1.4 ft·lb)	
Water pump bolt	M6	3	10 Nm (1 m·kg, 7.2 ft·lb)	
Water pump housing cover bolt	M6	3	11 Nm (1.1 m·kg, 8 ft·lb)	
Thermostat cover bolt	M6	2	10 Nm (1 m·kg, 7.2 ft·lb)	
Radiator bolt	M6	2	7 Nm (0.7 m·kg, 5.1 ft·lb)	
Engine oil drain bolt (crankcase)	M14	1	23 Nm (2.3 m·kg, 17 ft·lb)	
Engine oil drain bolt (oil tank)	M8	1	19 Nm (1.9 m·kg, 13 ft·lb)	
Oil baffle plate 1 bolt	M5	2	4 Nm (0.4 m·kg, 2.9 ft·lb)	LT
Oil baffle plate 2 bolt	M6	2	10 Nm (1 m·kg, 7.2 ft·lb)	
Oil pump bolt	M6	1	10 Nm (1 m·kg, 7.2 ft·lb)	
Oil pump housing 2 screw	M6	1	7 Nm (0.7 m·kg, 5.1 ft·lb)	
Oil strainer bolt	M6	2	10 Nm (1 m·kg, 7.2 ft·lb)	LT
Oil filter cover drain bolt	M6	1	10 Nm (1 m·kg, 7.2 ft·lb)	
Oil filter cover bolt	M6	2	10 Nm (1 m·kg, 7.2 ft·lb)	
Check screw (oil filter cover)	M5	1	5 Nm (0.5 m·kg, 3.6 ft·lb)	
Oil delivery pipe union bolt	M10	2	20 Nm (2 m·kg, 14 ft·lb)	
Oil delivery pipe bolt	M6	1	10 Nm (1 m·kg, 7.2 ft·lb)	
Oil pipe joint bolt	M14	1	50 Nm (5 m·kg, 36 ft·lb)	
Oil tank inlet hose bolt (oil tank side)	M6	1	10 Nm (1 m·kg, 7.2 ft·lb)	
Oil tank inlet hose bolt (engine side)	M6	1	10 Nm (1 m·kg, 7.2 ft·lb)	
Oil tank outlet hose nut	M16	1	35 Nm (3.5 m·kg, 25 ft·lb)	
Oil tank outlet hose bolt	M6	2	10 Nm (1 m·kg, 7.2 ft·lb)	
Intake manifold clamp screw	M4	2	3 Nm (0.3 m·kg, 2.2 ft·lb)	
Air filter case joint clamp screw	M5	1	4 Nm (0.4 m·kg, 2.9 ft·lb)	
ECU bolt	M6	2	7 Nm (0.7 m·kg, 5.1 ft·lb)	
ECU bracket bolt	M6	2	7 Nm (0.7 m·kg, 5.1 ft·lb)	
Tailpipe cover bolt	M6	3	8 Nm (0.8 m·kg, 5.8 ft·lb)	
Spark arrester bolt	M6	4	10 Nm (1 m·kg, 7.2 ft·lb)	
Muffler and exhaust pipe bolt	M8	1	18 Nm (1.8 m·kg, 13 ft·lb)	
Muffler bolt	M8	2	38 Nm (3.8 m·kg, 27 ft·lb)	
Exhaust pipe nut	M8	2	20 Nm (2 m·kg, 14 ft·lb)	
Muffler protector screw	M6	2	7 Nm (0.7 m·kg, 5.1 ft·lb)	
Exhaust pipe protector screw	M6	3	6 Nm (0.6 m·kg, 4.3 ft·lb)	LT

Item	Thread size	Q'ty	Tightening torque	Remarks
Oil seal retainer bolt (clutch cover)	M6	2	10 Nm (1 m·kg, 7.2 ft·lb)	LT
Timing mark accessing screw	M14	1	2 Nm (0.2 m·kg, 1.4 ft·lb)	
Crankshaft end accessing screw	M36	1	2 Nm (0.2 m·kg, 1.4 ft·lb)	
Crankcase bearing retainer screw	M6	2	10 Nm (1 m·kg, 7.2 ft·lb)	LT
Crankcase bearing retainer bolt	M6	2	10 Nm (1 m·kg, 7.2 ft·lb)	LT
Crankcase bolt	M6	17	10 Nm (1 m·kg, 7.2 ft·lb)	
Engine oil filler bolt	M20	1	12 Nm (1.2 m·kg, 8.7 ft·lb)	
Starter clutch bolt	M8	3	30 Nm (3 m·kg, 22 ft·lb)	LT
Clutch spring bolt	M6	6	8 Nm (0.8 m·kg, 5.8 ft·lb)	
Clutch boss nut	M20	1	95 Nm (9.5 m·kg, 68 ft·lb)	Stake
Clutch cover bolt	M6	14	10 Nm (1 m·kg, 7.2 ft·lb)	
Drive sprocket nut	M22	1	85 Nm (8.5 m·kg, 61 ft·lb)	Use a lock washer.
Oil seal retainer bolt (left crankcase)	M6	2	10 Nm (1 m·kg, 7.2 ft·lb)	
Shift drum segment bolt	M8	1	30 Nm (3 m·kg, 22 ft·lb)	
Shift guide bolt	M6	2	10 Nm (1 m·kg, 7.2 ft·lb)	LT
Reverse shift lever bolt	M6	1	13 Nm (1.3 m·kg, 9.4 ft·lb)	
Shift pedal bolt	M6	1	16 Nm (1.6 m·kg, 11 ft·lb)	
Stator coil bolt	M6	3	7 Nm (0.7 m·kg, 5.1 ft·lb)	LT
Crankshaft position sensor bolt	M5	2	7 Nm (0.7 m·kg, 5.1 ft·lb)	LT
AC magneto lead holder bolt	M5	1	7 Nm (0.7 m·kg, 5.1 ft·lb)	LT
Coolant temperature sensor	M12	1	18 Nm (1.8 m·kg, 13 ft·lb)	
Starter motor bolt	M6	2	10 Nm (1 m·kg, 7.2 ft·lb)	
Reverse switch	M10	1	17 Nm (1.7 m·kg, 12 ft·lb)	
Neutral switch	M10	1	17 Nm (1.7 m·kg, 12 ft·lb)	

TIP

Temporarily tighten the cylinder bolts to 15 Nm (1.5 m·kg, 11 ft·lb), and then tighten them to 50 Nm (5.0 m·kg, 36 ft·lb).

EAS20350

CHASSIS TIGHTENING TORQUES

Item	Thread size	Q'ty	Tightening torque	Remarks
Engine upper bracket bolt	M8	2	33 Nm (3.3 m·kg, 24 ft·lb)	
Engine mounting nut (upper)	M10	1	40 Nm (4 m·kg, 29 ft·lb)	
Engine lower bracket bolt/nut	M8	4	41 Nm (4.1 m·kg, 30 ft·lb)	
Engine mounting nut (middle)	M10	1	66 Nm (6.6 m·kg, 48 ft·lb)	
Engine mounting nut (lower)	M10	1	66 Nm (6.6 m·kg, 48 ft·lb)	
Swingarm pivot shaft nut	M16	1	100 Nm (10 m·kg, 72 ft·lb)	
Rear frame mounting bolt	M10	4	54 Nm (5.4 m·kg, 39 ft·lb)	
Oil tank bolt	M6	2	7 Nm (0.7 m·kg, 5.1 ft·lb)	
Coolant reservoir bolt	M6	2	7 Nm (0.7 m·kg, 5.1 ft·lb)	
Rear shock absorber assembly nut (upper)	M12	1	55 Nm (5.5 m·kg, 40 ft·lb)	
Relay arm nut (upper)	M10	1	43 Nm (4.3 m·kg, 31 ft·lb)	
Connecting arm nut	M12	1	55 Nm (5.5 m·kg, 40 ft·lb)	
Rear shock absorber assembly nut (lower)	M10	1	43 Nm (4.3 m·kg, 31 ft·lb)	
Relay arm nut (lower)	M10	1	43 Nm (4.3 m·kg, 31 ft·lb)	
Rear axle pinch bolt	M8	4	21 Nm (2.1 m·kg, 15 ft·lb)	
Rear axle guide bolt	M12	1	55 Nm (5.5 m·kg, 40 ft·lb)	LT
Swingarm skid plate bolt	M6	4	7 Nm (0.7 m·kg, 5.1 ft·lb)	
Drive chain guide bolt	M6	1	7 Nm (0.7 m·kg, 5.1 ft·lb)	
Drive sprocket cover bolt	M6	2	10 Nm (1 m·kg, 7.2 ft·lb)	
Upper front arm nut	M10	2	40 Nm (4.0 m·kg, 29 ft·lb)	
Lower front arm nut	M10	4	55 Nm (5.5 m·kg, 40 ft·lb)	
Front shock absorber assembly nut (upper)	M10	2	50 Nm (5.0 m·kg, 36 ft·lb)	
Front shock absorber assembly nut (lower)	M10	2	50 Nm (5.0 m·kg, 36 ft·lb)	
Front brake hose holder bolt	M6	2	7 Nm (0.7 m·kg, 5.1 ft·lb)	
Pitman arm nut	M14	1	180 Nm (18 m·kg, 130 ft·lb)	
Steering stem bushing nut	M8	2	23 Nm (2.3 m·kg, 17 ft·lb)	Use a lock washer.
Handlebar holder bolt	M8	4	23 Nm (2.3 m·kg, 17 ft·lb)	
Tie-rod end locknut	M12	12	18 Nm (1.8 m·kg, 13 ft·lb)	
Front axle nut	M14	2	70 Nm (7 m·kg, 50 ft·lb)	
Steering knuckle and front upper arm nut	M10	4	25 Nm (2.5 m·kg, 18 ft·lb)	
Steering knuckle and front lower arm nut	M10	4	25 Nm (2.5 m·kg, 18 ft·lb)	

Item	Thread size	Q'ty	Tightening torque	Remarks
Steering knuckle and tie-rod ball joint nut	M10	2	25 Nm (2.5 m·kg, 18 ft·lb)	
Pitman arm and tie-rod ball joint nut	M10	2	25 Nm (2.5 m·kg, 18 ft·lb)	
Front brake disc guard (inner) screw	M6	4	7 Nm (0.7 m·kg, 5.1 ft·lb)	
Bearing retainer nut	M42	1	65 Nm (6.5 m·kg, 47 ft·lb)	
Fuel pump nut	M6	6	7 Nm (0.7 m·kg, 5.1 ft·lb)	
Fuel tank bolt	M6	4	7 Nm (0.7 m·kg, 5.1 ft·lb)	
Front wheel hub nut	M10	8	45 Nm (4.5 m·kg, 32 ft·lb)	
Front brake caliper mounting bolt	M8	4	28 Nm (2.8 m·kg, 20 ft·lb)	
Front brake disc mounting bolt	M8	8	28 Nm (2.8 m·kg, 20 ft·lb)	LT
Rear brake caliper mounting bolt	M8	2	43 Nm (4.3 m·kg, 31 ft·lb)	
Rear axle nut	M16	2	200 Nm (20 m·kg, 145 ft·lb)	See TIP.
Rear wheel hub nut	M10	8	45 Nm (4.5 m·kg, 32 ft·lb)	
Driven sprocket mounting bolt	M10	4	72 Nm (7.2 m·kg, 52 ft·lb)	
Front brake caliper union bolt	M10	2	27 Nm (2.7 m·kg, 19 ft·lb)	
Front brake pad retaining bolt	M10	4	17 Nm (1.7 m·kg, 12 ft·lb)	LT
Front brake caliper bleed screw	M8	2	6 Nm (0.6 m·kg, 4.3 ft·lb)	
Front brake master cylinder holder bolt	M6	2	7 Nm (0.7 m·kg, 5.1 ft·lb)	
Front brake lever pivot bolt	M6	1	6 Nm (0.6 m·kg, 4.3 ft·lb)	LS
Front brake master cylinder union bolt	M10	1	27 Nm (2.7 m·kg, 19 ft·lb)	
Throttle lever assembly holder bolt	M5	2	4 Nm (0.4 m·kg, 2.9 ft·lb)	
Clutch lever holder bolt	M5	2	4 Nm (0.4 m·kg, 2.9 ft·lb)	
Parking brake lever mounting bolt	M6	2	7 Nm (0.7 m·kg, 5.1 ft·lb)	
Front brake pipe nut	M10	1	19 Nm (1.9 m·kg, 13 ft·lb)	
Brake hose joint bolt	M6	1	10 Nm (1 m·kg, 7.2 ft·lb)	
Brake hose holder bolt	M6	2	7 Nm (0.7 m·kg, 5.1 ft·lb)	
Footrest bolt	M10	4	78 Nm (7.8 m·kg, 56 ft·lb)	
Foot protector bolt	M8	2	16 Nm (1.6 m·kg, 11 ft·lb)	
Foot protector nut	M8	2	16 Nm (1.6 m·kg, 11 ft·lb)	
Foot protector nut	M6	2	12 Nm (1.2 m·kg, 8.7 ft·lb)	
Engine skid plate bolt	M6	4	7 Nm (0.7 m·kg, 5.1 ft·lb)	
Rear axle ring nut	M36	1	240 Nm (24 m·kg, 175 ft·lb)	LT
Rear axle ring nut set bolt	M6	2	7 Nm (0.7 m·kg, 5.1 ft·lb)	LT
Rear brake pad retaining bolt	M10	2	17 Nm (1.7 m·kg, 12 ft·lb)	
Rear brake caliper bleed screw	M8	1	5 Nm (0.5 m·kg, 3.6 ft·lb)	

Item	Thread size	Q'ty	Tightening torque	Remarks
Rear brake caliper union bolt	M10	1	30 Nm (3 m·kg, 22 ft·lb)	
Parking brake case bolt	M8	2	22 Nm (2.2 m·kg, 16 ft·lb)	LT
Rear brake master bolt	M6	2	20 Nm (2 m·kg, 14 ft·lb)	
Rear brake master cylinder union bolt	M10	1	30 Nm (3 m·kg, 22 ft·lb)	
Rear brake master cylinder adjusting bolt	M8	1	17 Nm (1.7 m·kg, 12 ft·lb)	
Parking brake adjusting bolt locknut	M6	1	16 Nm (1.6 m·kg, 11 ft·lb)	
Rear brake disc mounting bolt	M8	4	33 Nm (3.3 m·kg, 24 ft·lb)	LT
Brake hose holder bolt	M6	2	7 Nm (0.7 m·kg, 5.1 ft·lb)	
Front guard bolt	M8	4	12 Nm (1.2 m·kg, 8.7 ft·lb)	
Front panel bolt	M6	2	4 Nm (0.4 m·kg, 2.9 ft·lb)	
Front fender bolt	M6	3	7 Nm (0.7 m·kg, 5.1 ft·lb)	
Front fender nut	M6	2	7 Nm (0.7 m·kg, 5.1 ft·lb)	
Headlight bolt	M6	2	7 Nm (0.7 m·kg, 5.1 ft·lb)	
Rear fender bolt	M6	1	7 Nm (0.7 m·kg, 5.1 ft·lb)	
Rear fender bolt	M6	2	9 Nm (0.7 m·kg, 5.1 ft·lb)	LT
Rear fender nut	M6	2	7 Nm (0.7 m·kg, 5.1 ft·lb)	
Tail/brake light assembly bolt	M6	2	7 Nm (0.7 m·kg, 5.1 ft·lb)	
Battery holding bracket bolt	M6	2	7 Nm (0.7 m·kg, 5.1 ft·lb)	
Air filter case bolt	M6	4	7 Nm (0.7 m·kg, 5.1 ft·lb)	
Rear carrier bar bolt	M8	4	32 Nm (3.2 m·kg, 23 ft·lb)	
ECU bolt	M6	2	7 Nm (0.7 m·kg, 5.1 ft·lb)	
Lean angle sensor nut	M4	2	2 Nm (0.2 m·kg, 1.4 ft·lb)	

TIP

1. Apply a rust preventive lubricant to the threads on both sides of the rear axle and to the wheel hub surfaces that contact the rear axle washers.
2. Tighten the rear axle nuts 200 Nm (20.0 m·kg, 145 ft·lb).
3. Loosen the rear axle nuts completely.
4. Retighten the rear axle nuts 200 Nm (20.0 m·kg, 145 ft·lb). Do not loosen the axle nuts after tightening them.
   If an axle nut slot is not aligned with the cotter pin hole on either side of the axle, further tighten the axle nut until a slot is aligned with the hole.

EAS20360

LUBRICATION POINTS AND LUBRICANT TYPES

EAS20370

ENGINE

Lubrication point	Lubricant
Oil seal lips	LS
O-rings	LS
Bearings	E
Crankshaft journal (clutch side)	M
Crankshaft pins	E
Timing chain sprocket inner surface	M
Connecting rod big end thrust surface	E
Piston pin	E
Piston surface	E
Valve stems, valve guides, and valve stem seals (intake and exhaust)	M
Valve stem ends (intake and exhaust)	M
Rocker arm shaft	E
Camshaft lobes	M
Decompressor lever pin	E
Decompressor lever spring	E
Water pump impeller shaft	E
Oil pump rotors (inner rotor 2 and outer rotor 2) and pump	E
Oil pump rotors (inner rotor 1 and outer rotor 1) and pump	LS
Torque limiter	E
Starter idle gear and starter wheel gear inner surface	E
Primary driven gear	E
Clutch pull rod	LS
Transmission gears (wheel and pinion)	M
Shift drum	E
Shift forks	E
Shift fork guide bar	M
Shift lever assembly	E
Shift shaft	E
Reverse shift shaft	E
Crankcase mating surface	Yamaha bond No. 1215 (Three bond No.1215®)
AC magneto lead grommet (AC magneto cover)	Yamaha bond No. 1215 (Three bond No.1215®)

EAS20390
LUBRICATION SYSTEM CHART AND DIAGRAMS

EAS20400
ENGINE OIL LUBRICATION CHART

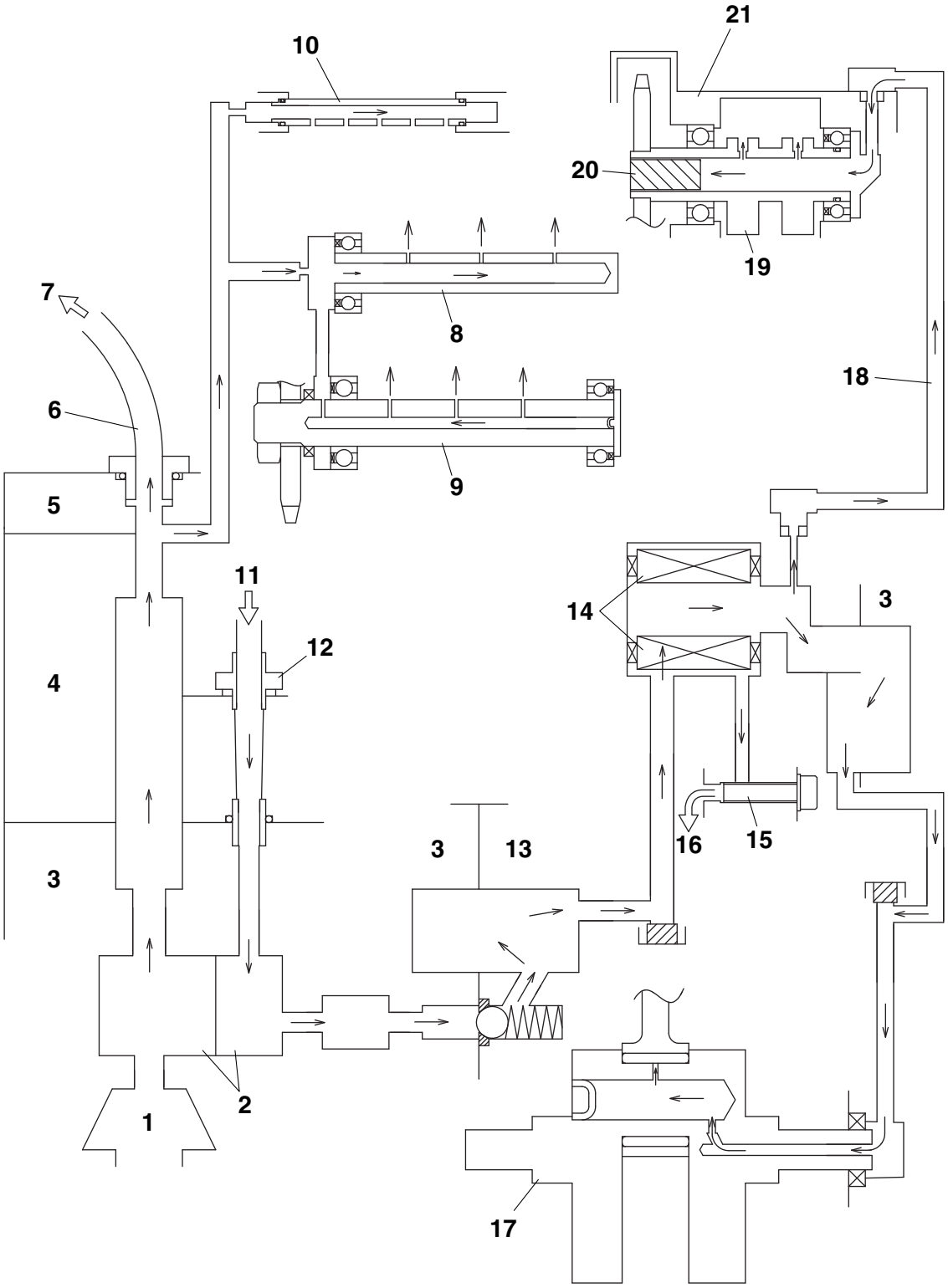

1. Oil strainer
2. Oil pump
3. Right crankcase
4. Left crankcase
5. AC magneto cover
6. Oil tank inlet hose
7. To oil tank
8. Main axle
9. Drive axle
10. Counter axle
11. From oil tank
12. Oil tank outlet hose joint
13. Clutch cover
14. Oil filter element
15. Drain bolt
16. To clutch cover
17. Crankshaft
18. Oil delivery pipe
19. Camshaft
20. Decompression
21. Cylinder head

EAS20410

LUBRICATION DIAGRAMS

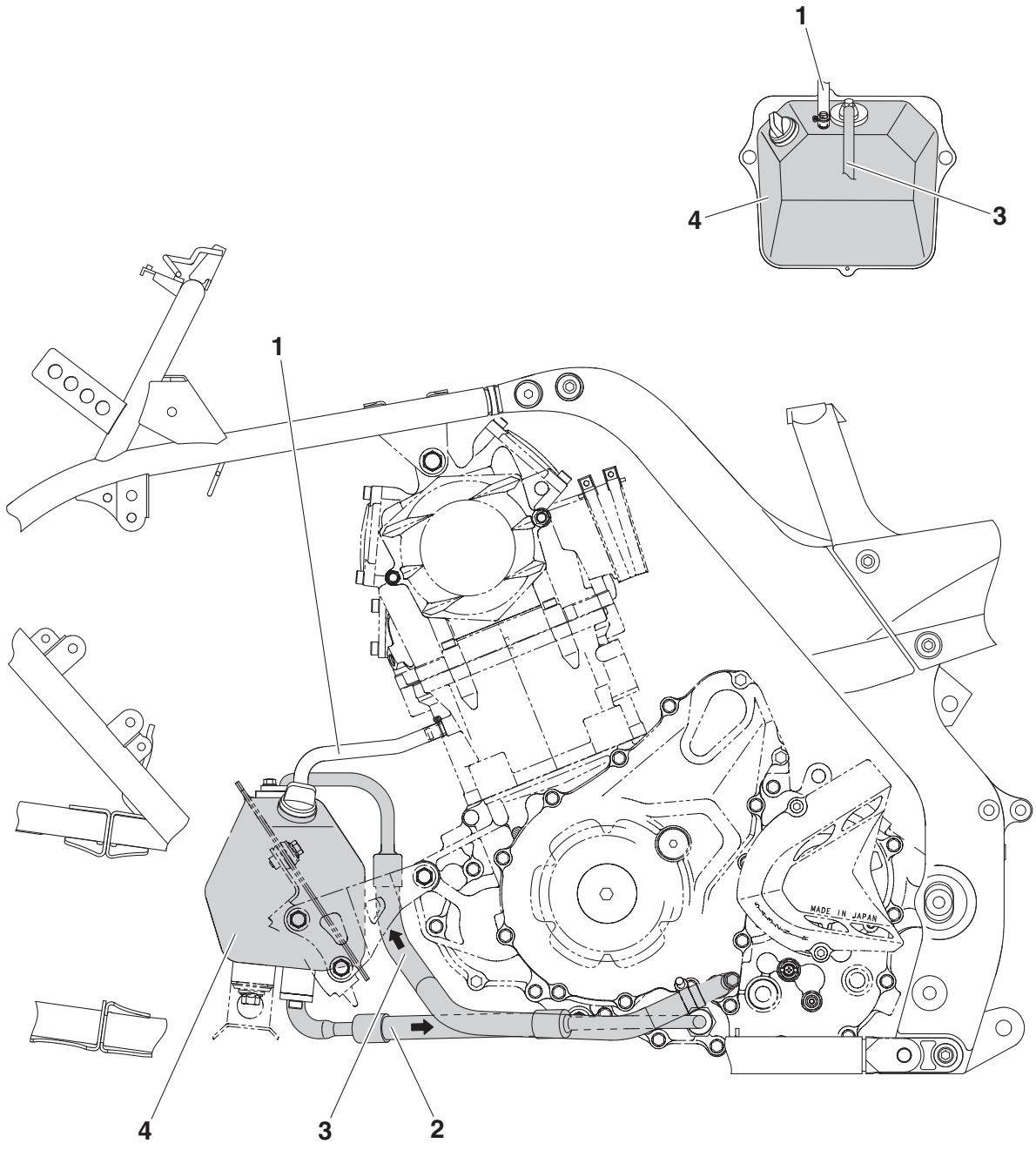

1. Oil tank breather hose
2. Oil tank outlet hose
3. Oil tank inlet hose
4. Oil tank

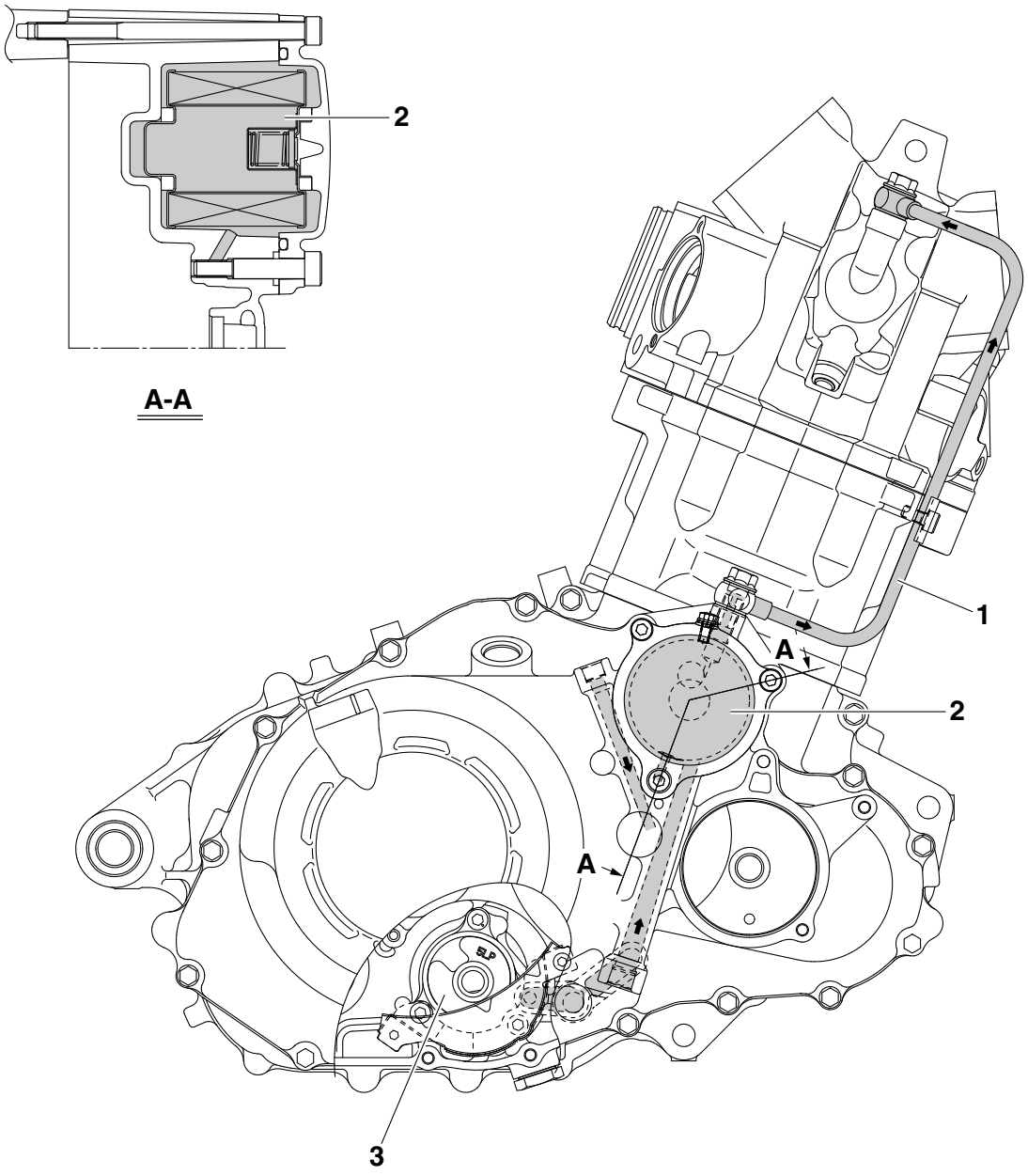
2
A-A
1
A
2
A
3

1. Oil delivery pipe
2. Oil filter
3. Oil pump

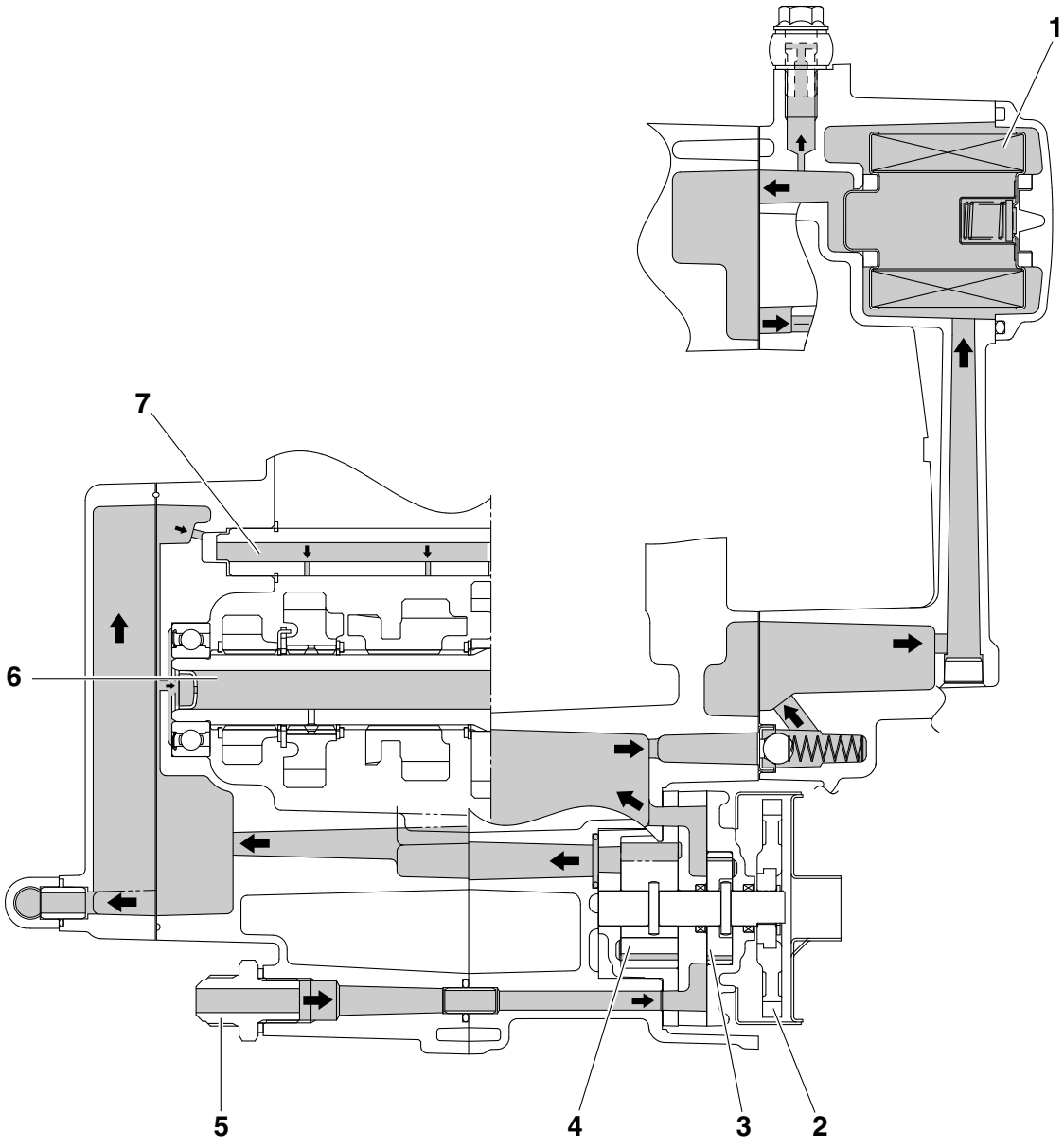
1
7
6
5
4
3
2

1. Oil filter
2. Oil pump driven gear
3. Oil pump rotor 1
4. Oil pump rotor 2
5. Oil tank outlet hose joint
6. Main axle
7. Counter axle

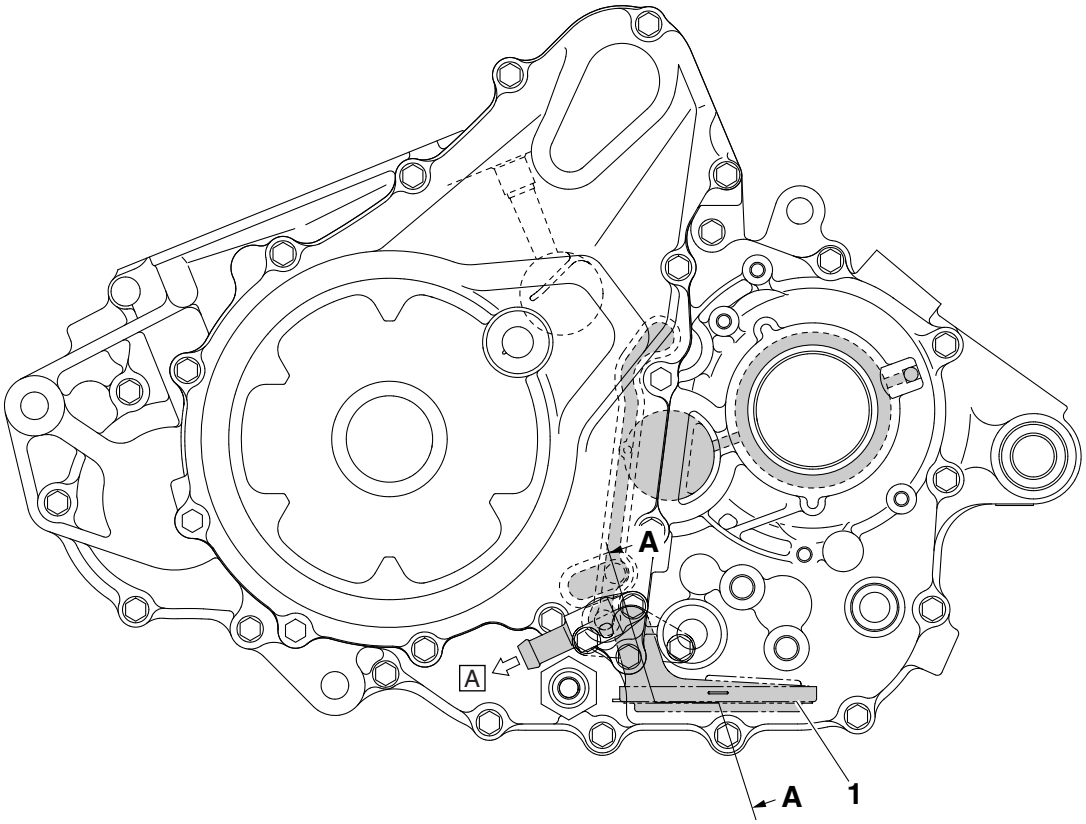

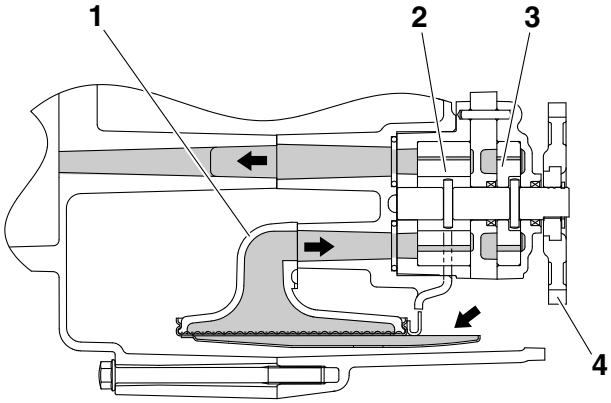

A-A

1. Oil strainer
2. Oil pump rotor 2
3. Oil pump rotor 1
4. Oil pump driven gear

A. To oil tank

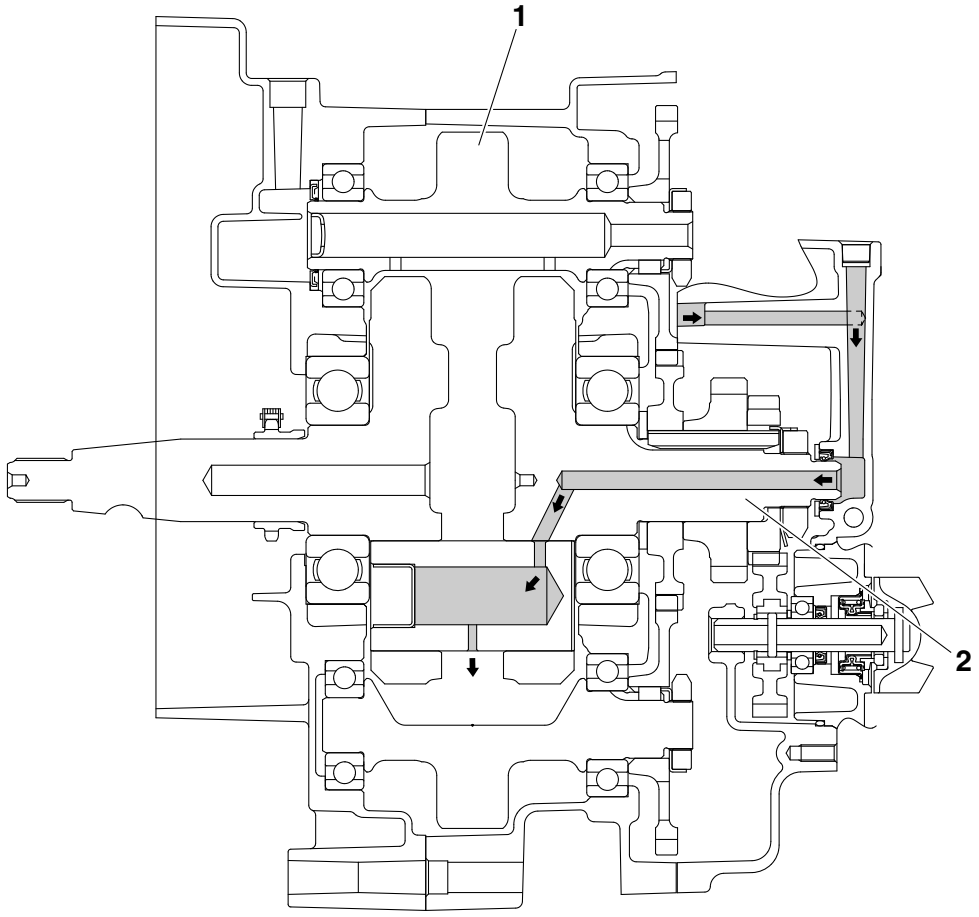
1
2

1. Balancer 1
2. Crankshaft

EAS20420

COOLING SYSTEM DIAGRAMS

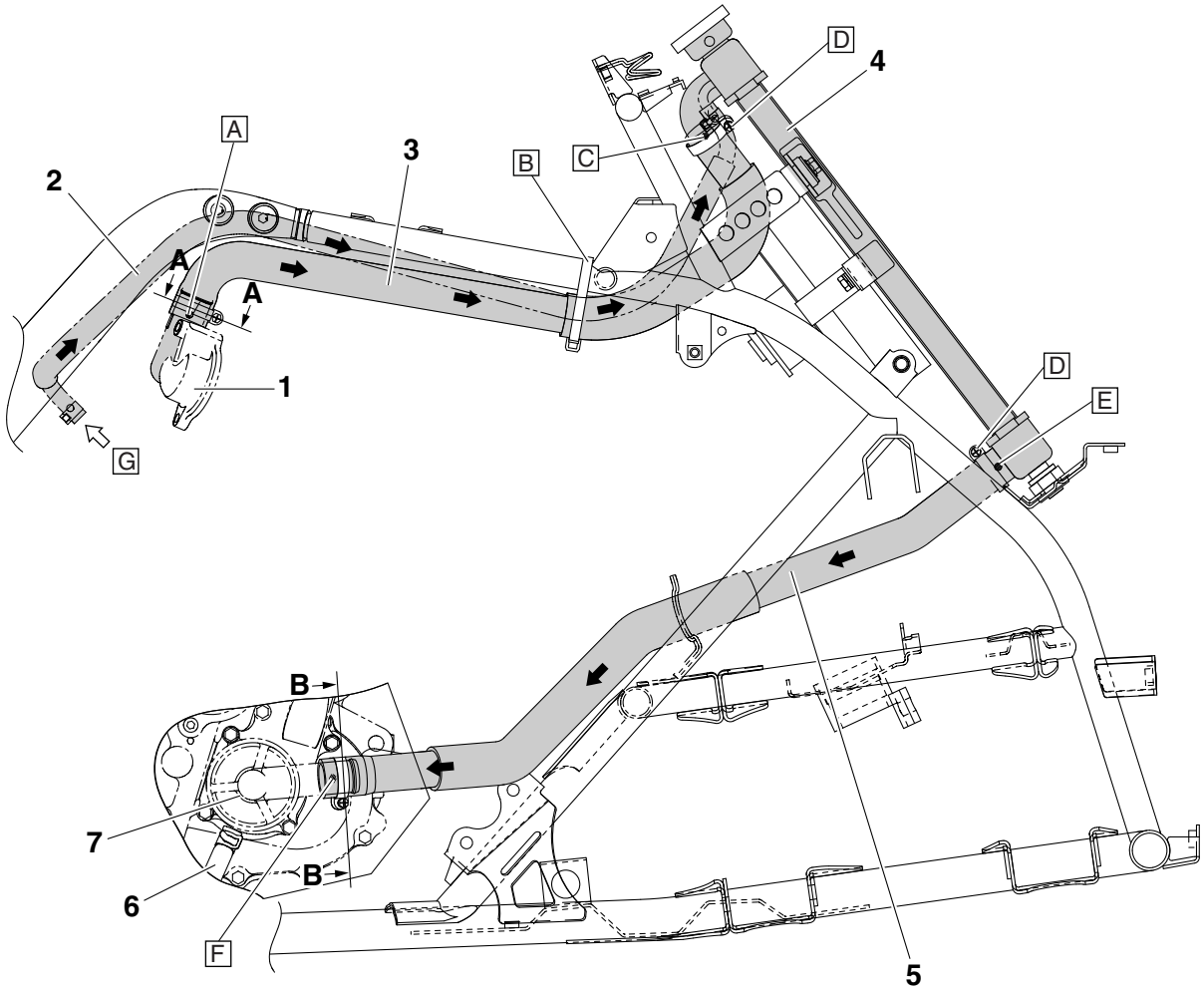

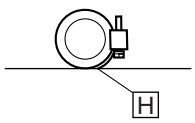

A-A

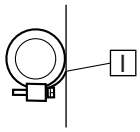

B-B

1. Thermostat cover
2. Fast idle plunger outlet hose
3. Radiator inlet hose
4. Radiator
5. Radiator outlet hose
6. Water pump breather hose
7. Water pump

A. Install the radiator inlet hose onto the thermostat cover pipe, making sure that it contacts the cover and its yellow paint mark is facing outward.
B. Fasten the fast idle plunger outlet hose and the radiator inlet hose with the plastic band.
C. Install the radiator inlet hose with its white paint mark facing outward.
D. Position the screw clamp so that its screw can be tightened from the right side of the vehicle.
E. Install the radiator outlet hose with its white paint mark facing outward.
F. Install the radiator outlet hose with its yellow paint mark facing outward.
G. From fast idle plunger
H. Position the screw clamp so that its screw can be tightened from the right side of the vehicle. Make sure that the end of the screw clamp does not protrude past the side of the radiator inlet hose.
I. Position the screw clamp so that its screw can be tightened from the right side of the vehicle. Make sure that the end of the screw clamp does not protrude past the side of the radiator outlet hose.

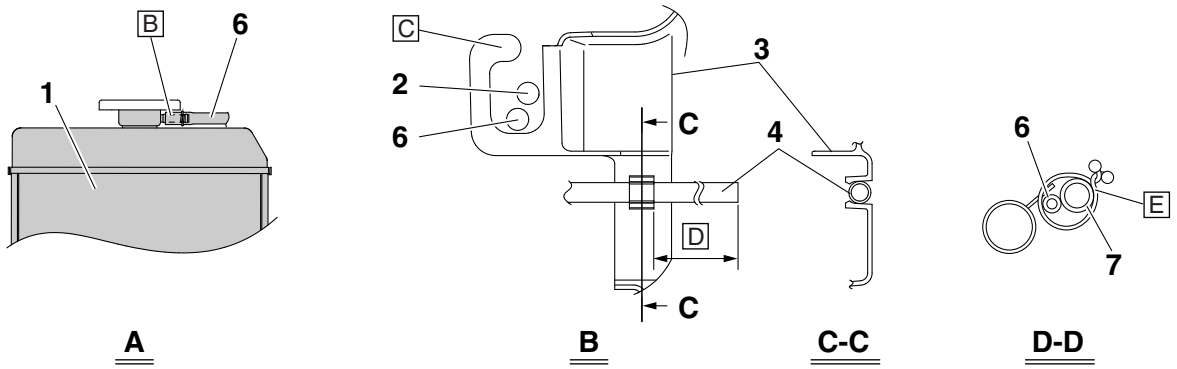
B
6
1
A
C
2
6
3
C
4
D
C
B
C-C
6
E
7
D-D

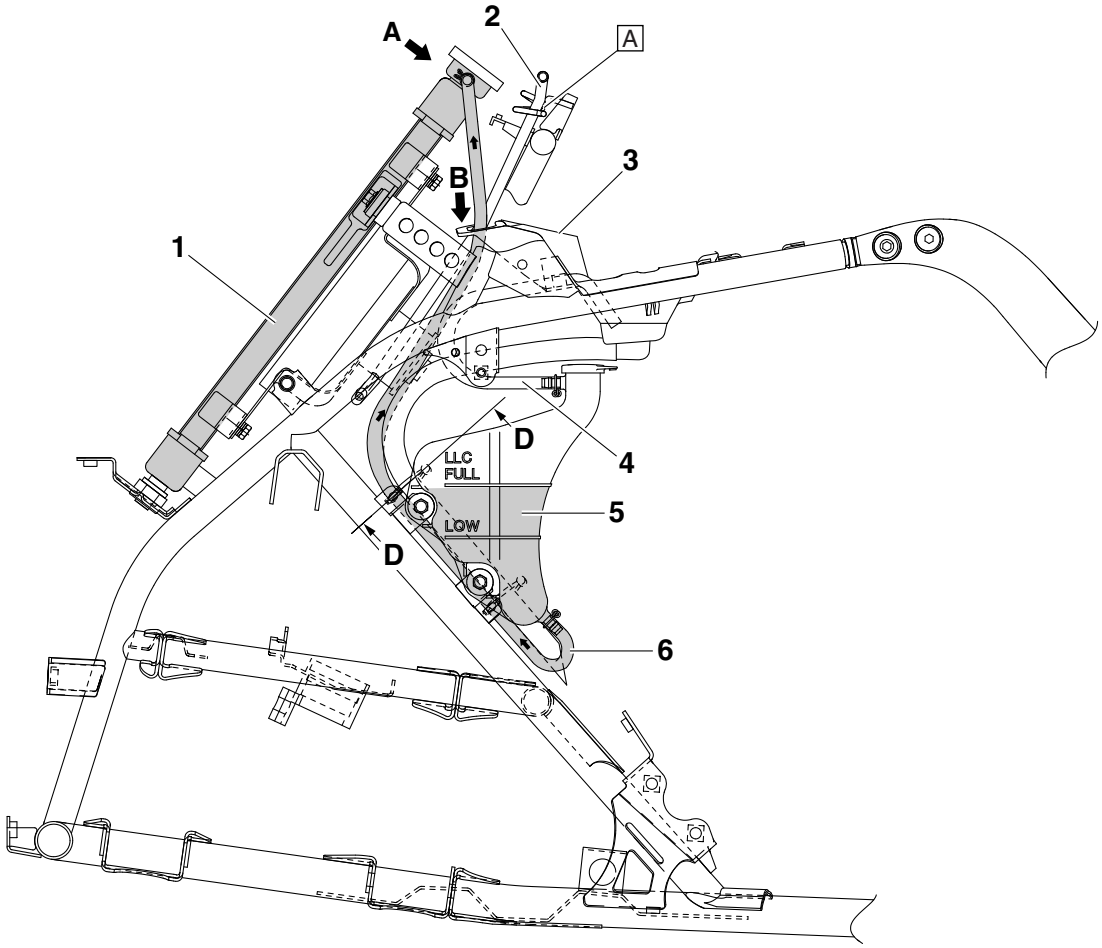
A
2
A
3
B
1
D
4
LLC
FULL
5
LOW
D
6

1. Radiator
2. Radiator fan motor breather hose
3. Fuel tank shield
4. Coolant reservoir breather hose
5. Coolant reservoir
6. Coolant reservoir hose
7. Drain hose

A. Pass the radiator fan motor breather hose through the guide.
B. Install the coolant reservoir hose onto the radiator pipe, making sure that it contacts the radiator.
C. Pass the coolant reservoir hose and radiator fan motor breather hose through the guide on the fuel tank shield.
D. 60 mm (2.36 in)
E. Pass the clamp through the hole in the stay on the frame, and then fasten the coolant reservoir hose and drain hose with the clamp.

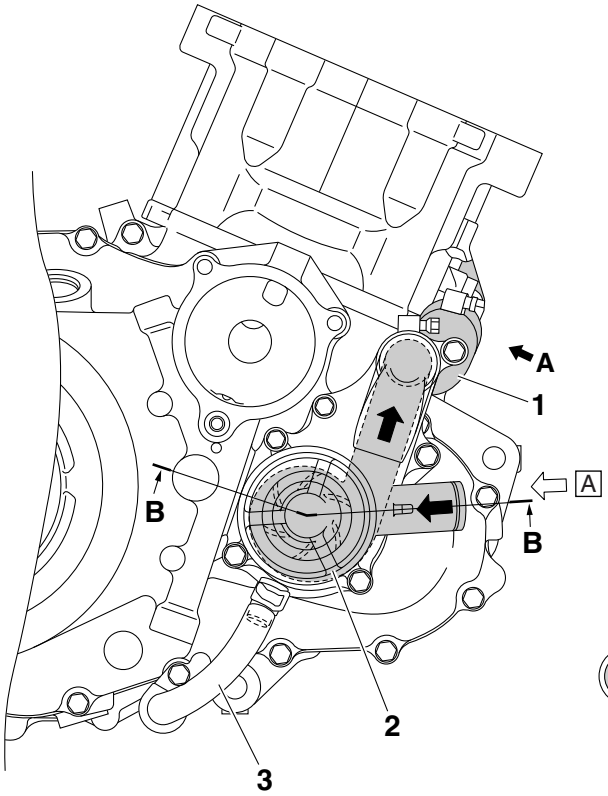

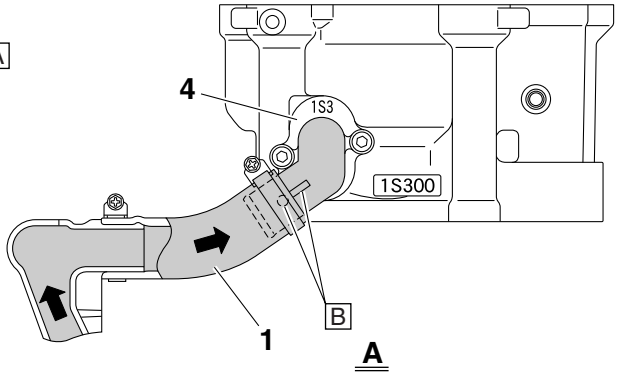

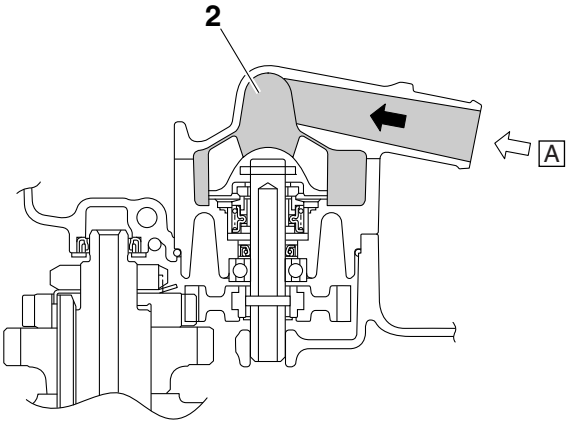

B-B

1. Water pump outlet hose
2. Water pump
3. Water pump breather hose
4. Water jacket inlet housing

A. From radiator

B. Install the water pump outlet hose onto the water jacket inlet housing, making sure to align the yellow paint mark on the hose with the projection on the water jacket inlet housing.

EAS20430

CABLE ROUTING

Handlebar (top and front view)

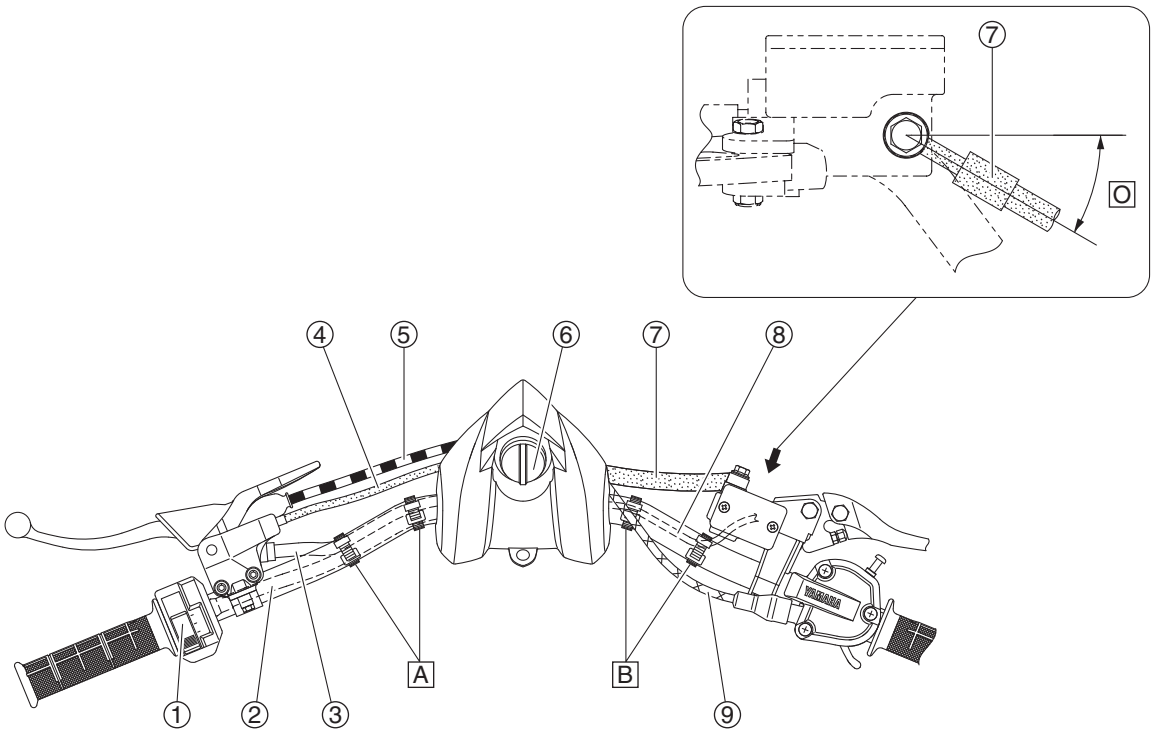

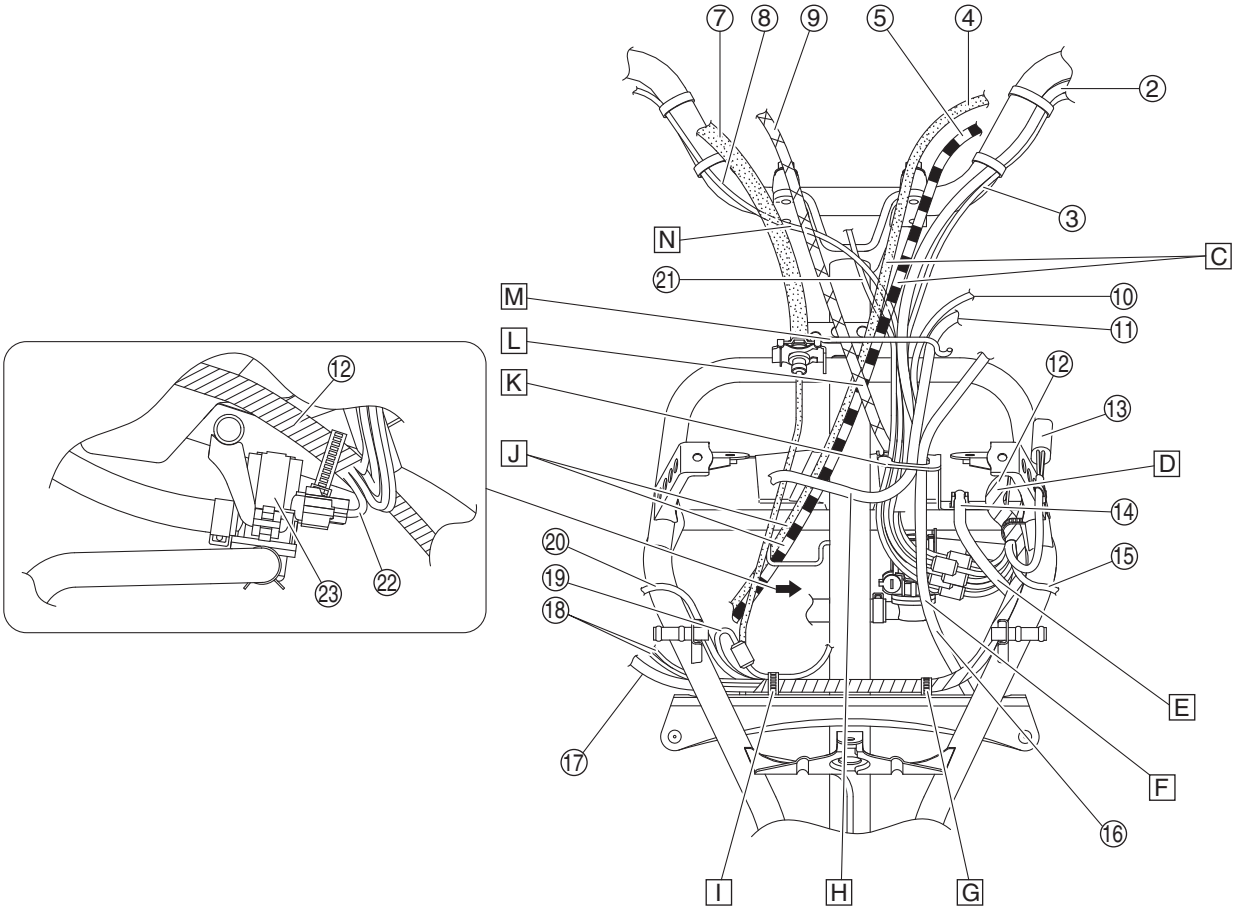

1. Handlebar switch
2. Handlebar switch lead
3. Clutch switch lead
4. Parking brake cable
5. Clutch cable
6. Main switch
7. Front brake hose
8. Front brake light switch lead
9. Throttle cable
10. Indicator light assembly lead
11. Radiator fan motor breather hose
12. Wire harness
13. Joint coupler
14. Coolant reservoir breather hose
15. Headlight lead (left)
16. Coolant reservoir hose
17. Rectifier/regulator lead
18. Ignition coil leads
19. Radiator fan motor lead
20. Headlight lead (right)
21. Main switch lead
22. Air cut-off valve lead
23. Air cut-off valve

A. Fasten the handlebar switch lead and clutch switch lead with the plastic bands at the bends in the handlebar. Point the end of each plastic band forward.

B. Fasten the front brake light switch lead with the plastic bands at the bends in the handlebar. Point the end of each plastic band forward.

C. Route the parking brake cable and clutch cable in front of the front brake light switch lead and main switch lead.

D. Route the wire harness above the fuel tank shield.

E. Route the coolant reservoir breather hose under the wire harness and over the handlebar switch lead, clutch switch lead, front brake light switch lead, main switch lead, and indicator light assembly lead, and then fasten the hose with the holder on the fuel tank shield.

F. Route the coolant reservoir hose in front of the handlebar switch lead, clutch switch lead, front brake light switch lead, main switch lead, and indicator light assembly lead.

G. Secure the plastic band by inserting the projection on the band into the hole in the frame, and then fasten the wire harness with the band, making sure to point the end of the band rearward.

H. Route the radiator fan motor breather hose in front of the handlebar switch lead, clutch switch lead, front brake light switch lead, main switch lead, and indicator light assembly lead.

I. Secure the plastic band by inserting the projection on the band into the hole in the frame, and then fasten the wire harness and radiator fan motor lead with the band, making sure to point the end of the band rearward.

J. Pass the clutch cable and parking brake cable through the guide.

K. Pass the radiator fan motor breather hose, coolant reservoir hose, front brake light switch lead, main switch lead, handlebar switch lead, clutch switch lead, and indicator light assembly lead through the guide on the fuel tank shield, and then connect the leads under the guide.

L. Route the throttle cable in front of the clutch cable and parking brake cable, then above the fuel tank shield.

M. Pass the throttle cable, clutch cable, parking brake cable, front brake light switch lead, main switch lead, handlebar switch lead, clutch switch lead, indicator light assembly lead, and radiator fan motor breather hose through the guide.

N. Route the front brake light switch lead behind the front brake hose and throttle cable.

O. 25°–35°

Engine (left side view)

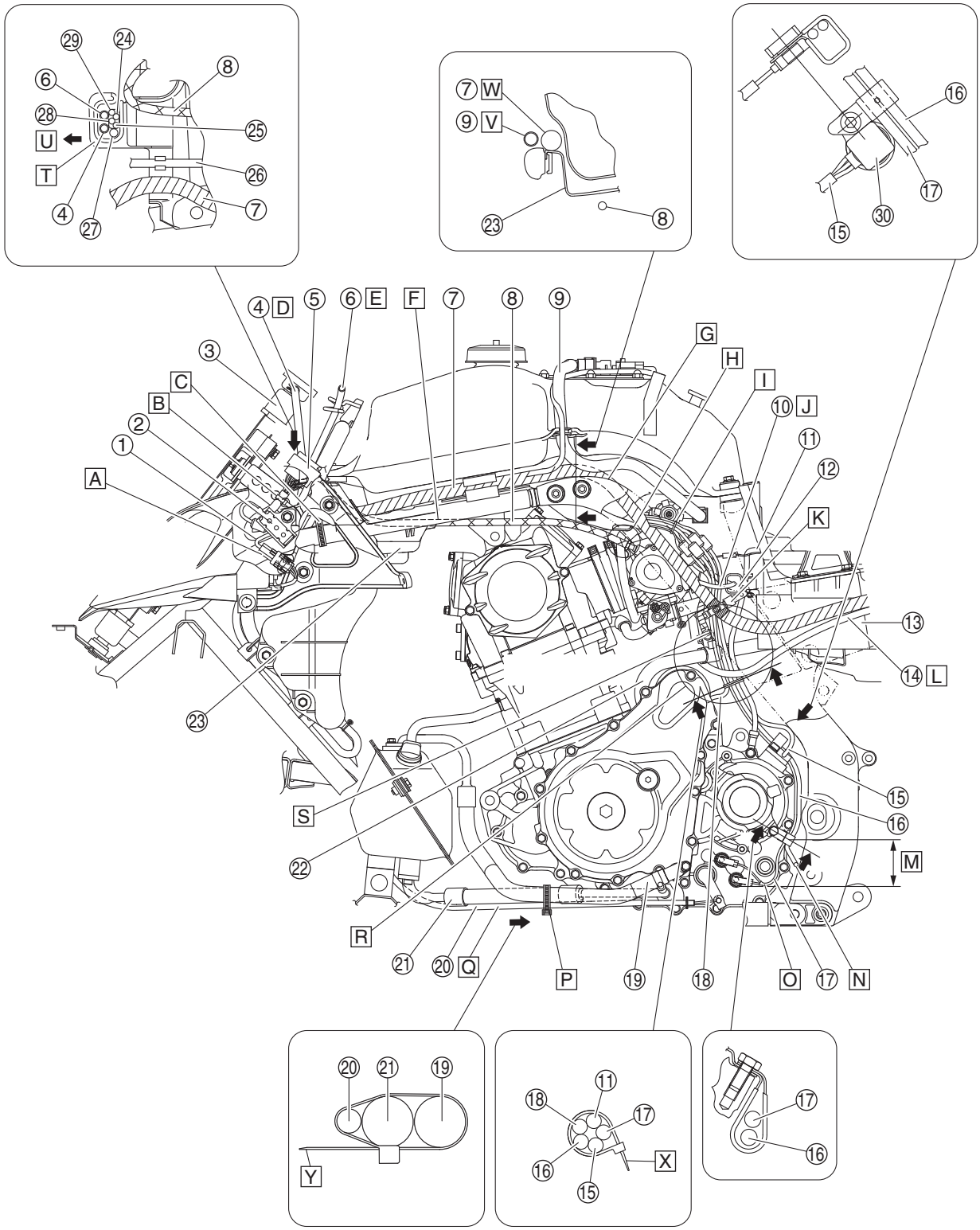

1. Headlight lead (left)
2. Resistor
3. Radiator
4. Coolant reservoir hose
5. Joint coupler
6. Radiator fan motor breather hose
7. Wire harness
8. Throttle cable
9. Fuel hose
10. Lean angle sensor lead
11. Negative battery lead
12. Lean angle sensor
13. Battery box
14. Starter motor lead
15. Speed sensor lead
16. Rear brake light switch lead
17. Sub-wire harness
18. AC magneto lead
19. Oil tank inlet hose
20. Reverse control cable
21. Oil tank outlet hose
22. Crankcase breather hose
23. Fuel tank shield
24. Clutch switch lead
25. Front brake light switch lead
26. Coolant reservoir breather hose
27. Indicator light assembly lead
28. Main switch lead
29. Handlebar switch lead
30. Speed sensor

A. Route the headlight lead (left) over the frame, connect the headlight coupler, and then insert the projection on the coupler into the hole in the stay on the front fender bracket. Be sure to fit the headlight coupler between the ribs on the front fender bracket.

B. Pass a plastic locking tie through the two rearmost holes in the frame, and then fasten the joint coupler lead with the tie. Position the plastic locking tie 10 mm (0.39 in) from the end of the protective sleeve of the joint coupler lead. Point the end of the plastic locking tie rearward.

C. Fasten the wire harness to the frame with the plastic band, making sure to point the end of the band inward.

D. Route the coolant reservoir hose to the outside of the radiator fan motor breather hose, and then connect it to the radiator.

E. Pass the radiator fan motor breather hose through the guide.

F. Route the throttle cable above the fuel tank shield.

G. Route the wire harness to the inside of the frame.

H. Make sure that the clearance between the throttle cable and the throttle body breather hose is 10–15 mm (0.39–0.59 in).

I. Connect the AC magneto leads, sub-wire harness, rear brake light switch lead, and speed sensor lead, and then fasten the leads with the plastic band. Point the end of the plastic band inward.

J. Route the lean angle sensor lead to the outside of the AC magneto lead, sub-wire harness, rear brake light switch lead, and speed sensor lead.

K. Secure the plastic band by inserting the projection on the band into the hole in the frame, and then fasten the wire harness at the center of its positioning tape with the band, making sure that the end of the band points rearward and the leads that branch off from the wire harness do not contact the frame.

L. Route the starter motor lead between the frame and the battery box, then under the crankcase breather hose.

M. Make sure that there is not excessive slack in the sub-wire harness in the area shown in the illustration.

N. From the right side of the vehicle

O. Route the sub-wire harness as shown in the illustration. The longer lead past the end of the protective sleeve is the neutral switch lead and the shorter lead is the reverse switch lead.

P. Fasten the oil tank outlet hose, oil tank inlet hose, and reverse control cable with the plastic band, making sure that the reverse control cable does not contact the edge of the engine stay.

Q. Route the reverse control cable under the oil tank outlet hose.

R. Route the AC magneto lead, negative battery lead, sub-wire harness, rear brake light switch lead, and speed sensor lead between the crankcase breather hose and the starter motor lead, and to the rear of the leads that branch off from the wire harness.

S. Route the leads that branch off from the wire harness over the crankcase breather hose, then towards the right side of the vehicle.

T. Pass the radiator fan motor breather hose and coolant reservoir hose, then the front brake light switch lead, main switch lead, handlebar switch lead, clutch switch lead, and indicator light assembly lead through the guide on the fuel tank shield, making sure to route the hoses to the front of the leads. Do not pinch or crush the radiator fan motor breather hose or coolant reservoir hose. Route the indicator light assembly lead to the left of the other leads.

U. Forward

V. Route the fuel hose to the outside of the wire harness.

W. Route the wire harness above the fuel tank shield.

X. Fasten the speed sensor lead, rear brake light switch lead, AC magneto lead, negative battery lead, and sub-wire harness with the plastic band. Point the end of the plastic band inward.

Y. Point the end of the plastic band inward.

Electrical components tray (left side view)

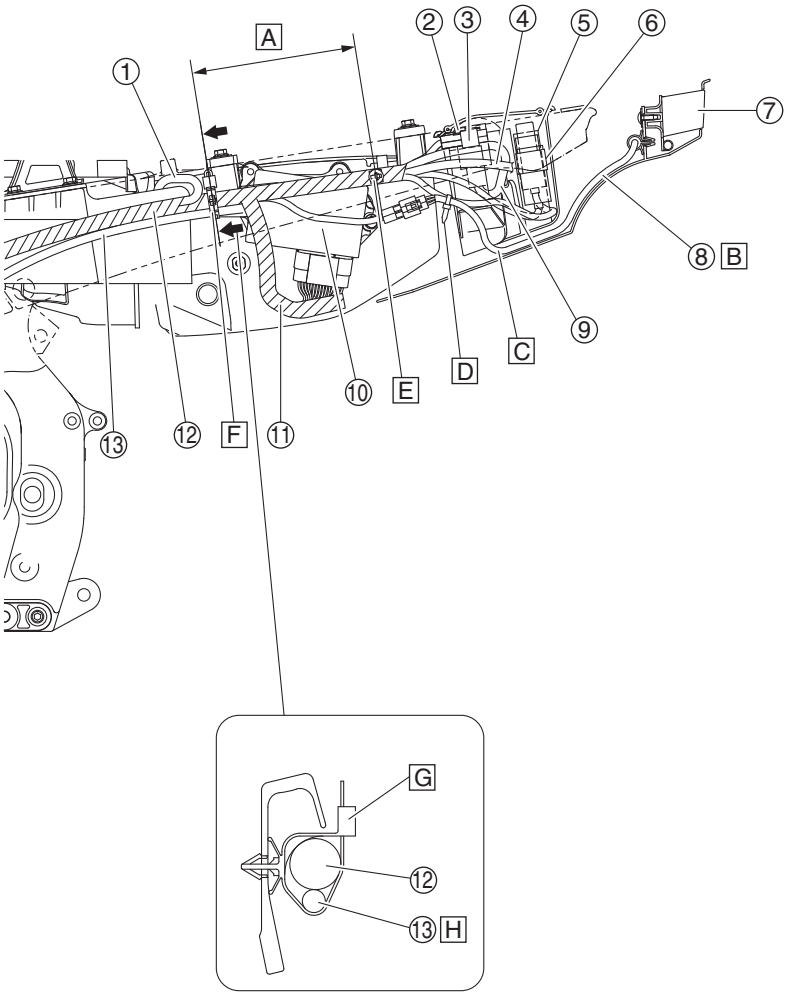

1. Starter relay lead
2. Fuel pump relay
3. Yamaha diagnostic tool coupler
4. Fuse box lead
5. Radiator fan motor relay
6. Headlight relay
7. Tail/brake light
8. Tail/brake light lead
9. Fuel pump relay lead
10. ECU (engine control unit)
11. ECU lead
12. Wire harness
13. Starter motor lead

A. Make sure that there is no slack in the wire harness in the area shown in the illustration.

B. When installing the tail/brake light cover and rear fender, be sure not to pinch the tail/brake light lead between the frame and the cover.

C. Make sure that the tail/brake light lead is not pulled taut when installing the rear fender.

D. Fasten the radiator fan motor relay lead and tail/brake light lead with the plastic band, making sure to point the end of the band downward. Fasten the leads near the tail/brake light coupler and after the split in the wire harness, making sure to install the plastic band around the protective sleeve of the tail/brake light lead, not the lead itself.

E. Insert the projection on the wire harness holder into the hole in the frame.

F. Fasten the wire harness with the plastic band so that the ECU lead is routed downward.

G. Secure the plastic band by inserting the projection on the band into the hole in the frame, and then fasten the wire harness and starter motor lead with the band, making sure to point the end of the band upward and to fasten the wire harness between the sections where the starter relay lead and ECU lead branch off from the wire harness.

H. Route the starter motor lead under the wire harness.

Electrical components tray (top view)

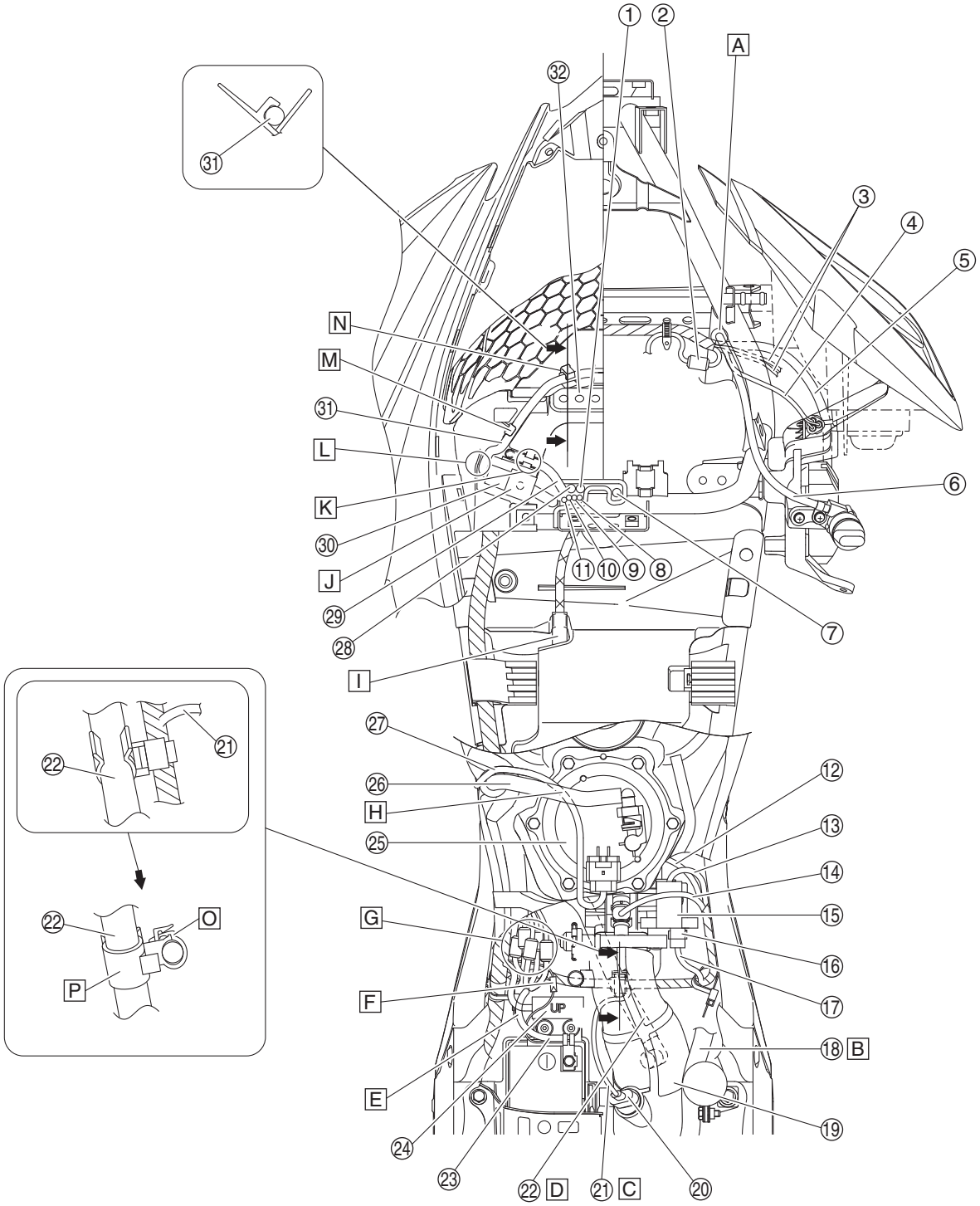

1. Parking brake cable
2. Radiator fan motor coupler
3. Ignition coil leads
4. Headlight lead (right)
5. Rectifier/regulator lead
6. Reverse control cable
7. Throttle cable
8. Handlebar switch lead
9. Clutch switch lead
10. Main switch lead
11. Front brake light switch lead
12. Coolant temperature sensor lead
13. Intake air pressure sensor lead
14. Fuel injector lead
15. Intake air pressure sensor
16. Throttle position sensor
17. Throttle position sensor lead
18. Air induction system hose (air filter case joint to air cut-off valve)
19. Air filter case joint
20. Intake air temperature sensor
21. Intake air temperature sensor lead
22. Crankcase breather hose
23. Negative battery lead
24. Lean angle sensor
25. Fuel pump
26. Fuel hose
27. Fuel pump lead
28. Clutch cable
29. Radiator fan motor breather hose
30. Indicator light assembly coupler
31. Indicator light assembly lead
32. Indicator light assembly

A. Route the reverse control cable to the front of the wire harness.
B. Route the air induction system hose (air filter case joint to air cut-off valve) over the air filter case joint.
C. Leave some slack in the intake air temperature sensor lead in the area shown in the illustration.
D. Route the crankcase breather hose between the battery box and the air filter joint, and under the wire harness.
E. Route the negative battery lead between the lean angle sensor and the wire harness.
F. Route the negative battery lead connector as shown in the illustration.
G. Connect the AC magneto lead, sub-wire harness, rear brake light switch lead, and speed sensor lead in front of the lean angle sensor.
H. Route the fuel pump lead under the fuel hose.
I. Make sure to position the throttle cable protector as shown in the illustration.
J. Insert the projection on the indicator light assembly coupler into the hole in the front fender.
K. Fasten the radiator fan motor breather hose with the holder on the front fender, and then insert the end of the hose into the hole in the fender.
L. Make sure that the indicator light assembly lead is not routed on top of the rib on the front fender.
M. Fasten the indicator light assembly lead with the holder on the front fender.
N. Fasten the indicator light assembly lead with the holder on the radiator grill.
O. Fasten the leads with the holder at the section before the intake air temperature sensor lead branches off from the other leads. Face the catch of the holder forward.
P. Point the open ends of the holder to the right.

Rear fender (top view)

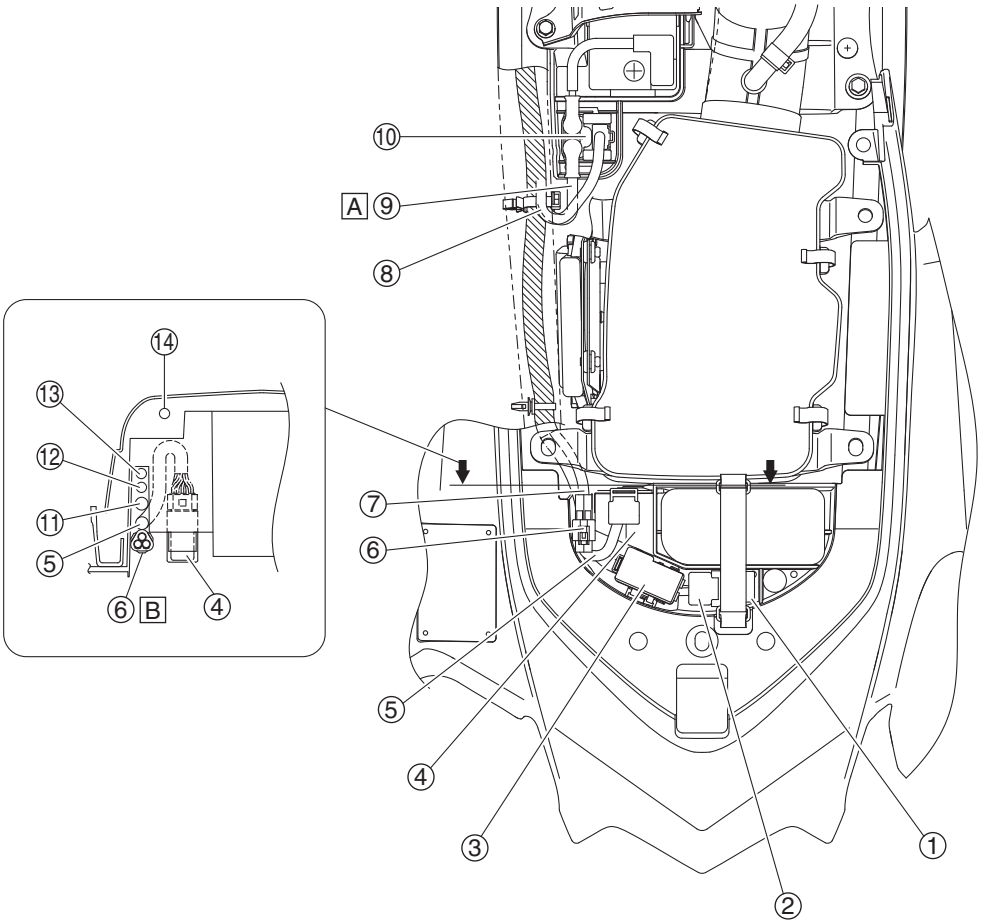

1. Radiator fan motor relay
2. Headlight relay
3. Fuse box
4. Fuel pump relay
5. Fuel pump relay lead
6. Yamaha diagnostic tool coupler
7. Yamaha diagnostic tool lead
8. Starter relay lead
9. Starter motor lead
10. Starter relay
11. Fuse box lead
12. Headlight relay lead
13. Radiator fan motor relay lead
14. Tail/brake light lead

A. Route the starter motor lead under the starter relay lead.

B. Route the Yamaha diagnostic tool lead over the fuel pump relay lead, fuse box lead, headlight relay lead, and radiator fan motor relay lead.

Engine (right side view)

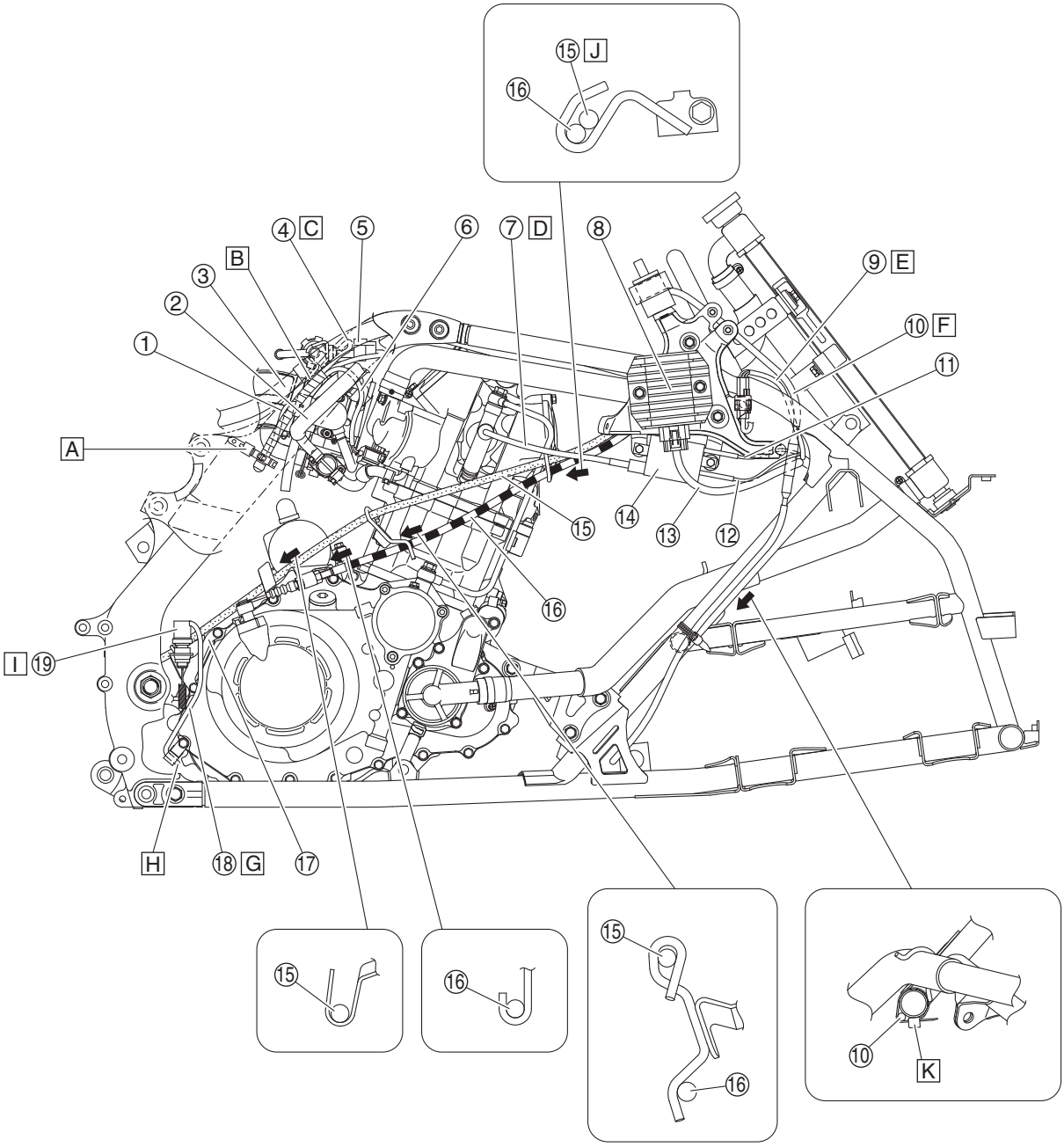

1. Throttle position sensor lead
2. Fast idle plunger outlet hose
3. Air induction system hose (air filter case joint to air cut-off valve)
4. Fuel injector lead
5. Intake air pressure sensor
6. Coolant temperature sensor lead
7. Spark plug lead
8. Rectifier/regulator
9. Headlight lead (right)
10. Reverse control cable
11. Ignition coil lead (red)
12. Ignition coil lead (orange)
13. Rectifier/regulator lead
14. Ignition coil
15. Parking brake cable
16. Clutch cable
17. Rear brake light switch holder
18. Rear brake light switch lead
19. Rear brake light switch

A. Secure the plastic band by inserting the projection on the band into the hole in the frame, and then fasten the leads where the throttle position sensor lead branches off from the other leads, making sure to point the end of the band rearward.
B. Route the leads between the air induction system hose (air filter case joint to air cut-off valve) and the fast idle plunger outlet hose.
C. Route the fuel injector lead over the intake air pressure sensor.
D. Route the spark plug lead to the outside of the clutch cable and parking brake cable, making sure that the lead does not contact the cylinder head.
E. Route the headlight lead (right) over the frame, connect the headlight coupler, and then insert the projection on the coupler into the hole in the stay on the front fender bracket.
F. Route the reverse control cable to the inside of the frame.
G. Route the rear brake light switch lead to the inside of the spring.
H. Make sure that the rear brake light switch lead does not contact the swingarm. There should be no slack in the rear brake light switch lead between the holder shown in the illustration and the holder on the left side of the vehicle.
I. Route the rear brake light switch lead to the outside of the rear brake light switch holder.
J. Route the parking brake cable above the clutch cable.
K. Point the end of the plastic band downward.

Front brake hose (front and top view)

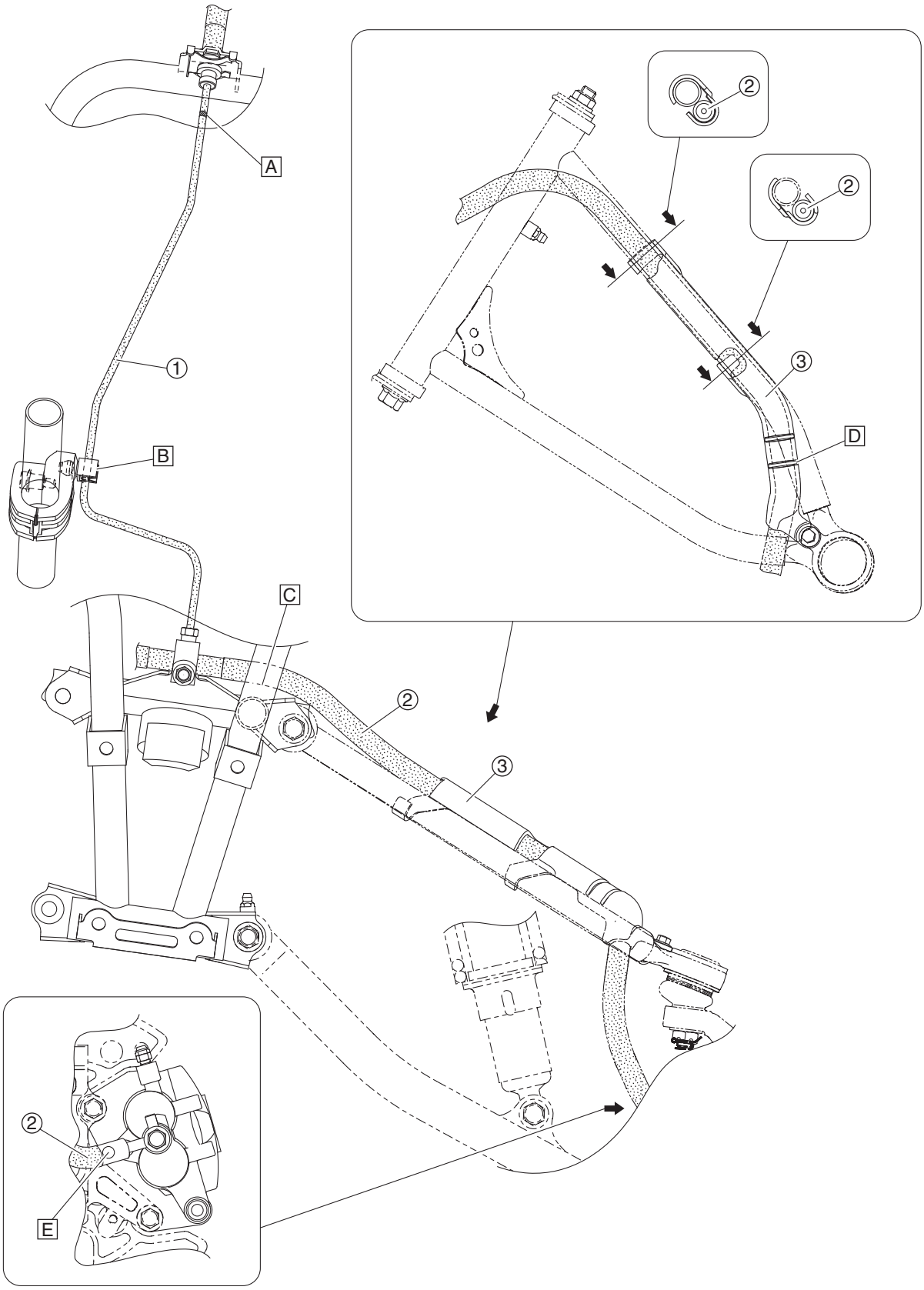

1. Front brake pipe
2. Front brake hose
3. Front brake hose holder

A. Face the mark on the front brake pipe upward.
B. Fasten the front brake pipe with the holder.
C. Route the front brake hose over the upper front arm.
D. Fit the grommet on the front brake hose into the slots in the front brake hose holder.
E. Connect the end of the front brake hose that is identified by the green paint mark to the left front brake caliper.

Rear brake hose (right side view)

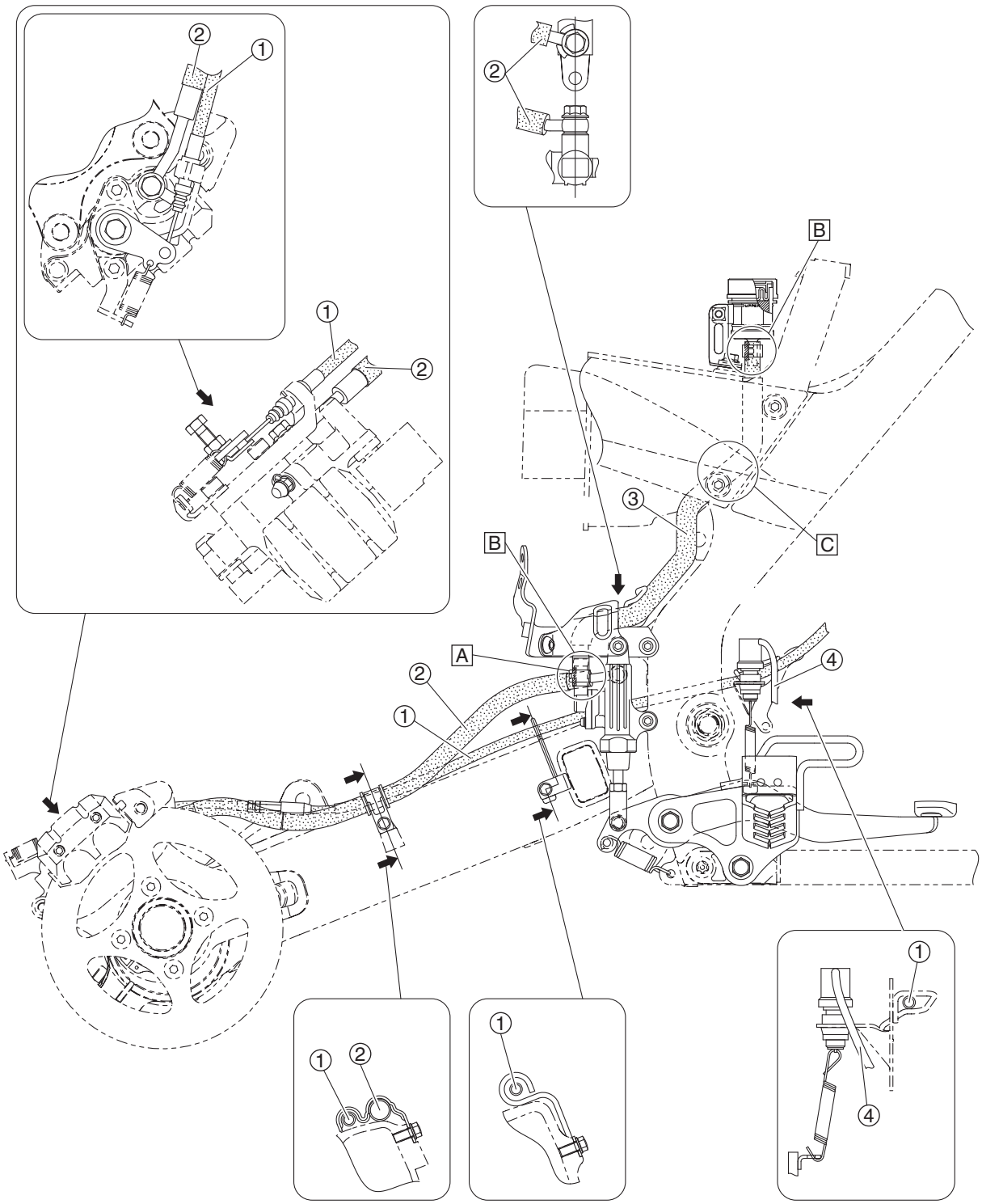

1. Parking brake cable
2. Rear brake hose
3. Brake fluid reservoir hose
4. Rear brake light switch lead

A. Make sure that the ends of the hose clamp are not pointing outward.
B. Face the white paint marks on both ends of the brake fluid reservoir hose rearward. Point the ends of the hose clamp to the outward.
C. Route the brake fluid reservoir hose between the battery box and the frame.

Throttle body (left and right side view)

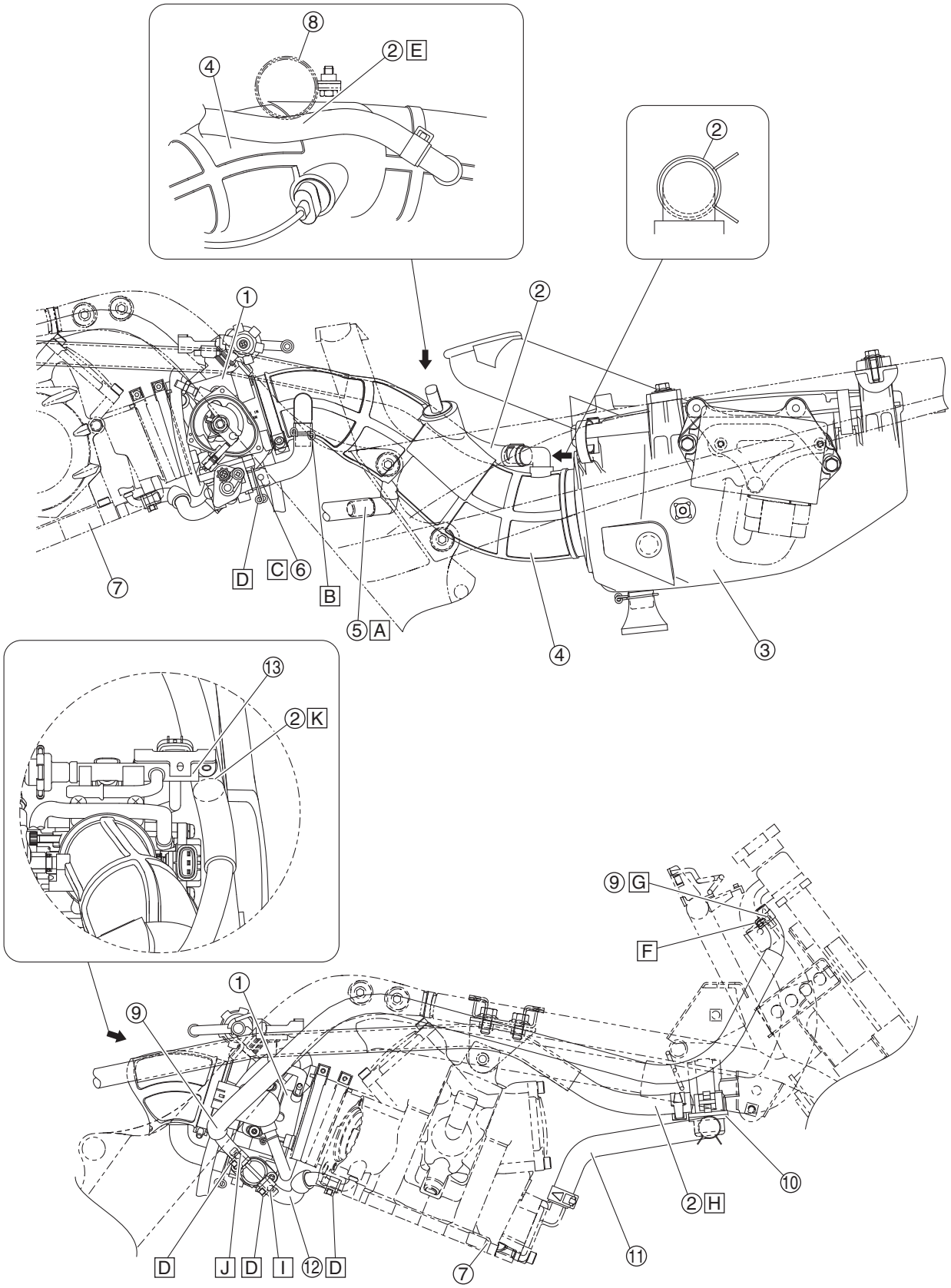

1. Throttle body
2. Air induction system hose (air filter case joint to air cut-off valve)
3. Air filter case
4. Air filter case joint
5. Crankcase breather hose
6. Idle air hose
7. Cylinder head
8. Brake fluid reservoir
9. Fast idle plunger outlet hose
10. Air cut-off valve
11. Air induction system hose (air cut-off valve to reed valve cover)
12. Fast idle plunger inlet hose
13. Fuel injection pipe

A. Install the crankcase breather hose up to the wide portion of the hose fitting.
B. Point the ends of the hose clamp outward.
C. Install the idle air hose with its white paint mark facing to the left.
D. Point the ends of the hose clamp downward.
E. When installing the air induction system hose (air filter case joint to air cut-off valve), so that the hose is not pinched between the air filter case joint and the brake fluid reservoir.
F. Point the ends of the hose clamp rearward.
G. Install the fast idle plunger outlet hose with its yellow paint mark facing to the right.
H. Connect the end of the air induction system hose (air filter case joint to air cut-off valve) that is identified by the red paint mark to the air cut-off valve.
I. Install the fast idle plunger inlet hose with its white paint mark facing to the right.
J. Install the fast idle plunger outlet hose with its white paint mark facing to the right.
K. Route the air induction system hose (air filter case joint to air cut-off valve) under the fuel injection pipe.

PERIODIC CHECKS AND ADJUSTMENTS

EAS20450
PERIODIC MAINTENANCE

EAS20460
INTRODUCTION
This chapter includes all information necessary to perform recommended checks and adjustments. If followed, these preventive maintenance procedures will ensure more reliable vehicle operation, a longer service life and reduce the need for costly overhaul work. This information applies to vehicles already in service as well as to new vehicles that are being prepared for sale. All service technicians should be familiar with this entire chapter.

EBU21745
PERIODIC MAINTENANCE CHART FOR THE EMISSION CONTROL SYSTEM
TIP
- For ATVs not equipped with an odometer or an hour meter, follow the month maintenance intervals.
- For ATVs equipped with an odometer or an hour meter, follow the km (mi) or hours maintenance intervals. However, keep in mind that if the ATV isn't used for a long period of time, the month maintenance intervals should still be followed.
- Items marked with an asterisk should be performed by a Yamaha dealer as they require special tools, data and technical skills.

NO.		ITEM	CHECK OR MAINTENANCE JOB	Whichever comes first ⇨		INITIAL			EVERY	
					month	1	3	6	6	12
					km (mi)	320 (200)	1300 (800)	2500 (1600)	2500 (1600)	5000 (3200)
					hours	20	80	160	160	320
1	*	Fuel line	• Check fuel hoses for cracks or other damage, and replace if necessary.					√	√	√
2		Spark plug	• Check condition and clean, regap, or replace if necessary.			√	√	√	√	√
3	*	Valves	• Check valve clearance and adjust if necessary.			√		√	√	√
4	*	Fuel injection	• Check and adjust engine idle speed.			√	√	√	√	√
5	*	Crankcase breather system	• Check breather hose for cracks or other damage, and replace if necessary.					√	√	√
6	*	Exhaust system	• Check for leakage and replace gasket(s) if necessary. • Check for looseness and tighten all screw clamps and joints if necessary.					√	√	√
7		Spark arrester	• Clean.					√	√	√
8	*	Air induction system	• Check the air cut-off valve, reed valve, and hose for damage. • Replace any damaged parts if necessary.			√	√	√	√	√

EBU21868
GENERAL MAINTENANCE AND LUBRICATION CHART
TIP
- For ATVs not equipped with an odometer or an hour meter, follow the month maintenance intervals.
- For ATVs equipped with an odometer or an hour meter, follow the km (mi) or hours maintenance intervals. However, keep in mind that if the ATV isn't used for a long period of time, the month maintenance intervals should still be followed.
- Items marked with an asterisk should be performed by a Yamaha dealer as they require special tools, data and technical skills.

NO.		ITEM	CHECK OR MAINTENANCE JOB	Whichever comes first ⇨	INITIAL			EVERY	
				month	1	3	6	6	12
				km (mi)	320 (200)	1300 (800)	2500 (1600)	2500 (1600)	5000 (3200)
				hours	20	80	160	160	320
1		Air filter element	• Clean and replace if necessary.		Every 20–40 hours (more often in wet or dusty areas)				
2	*	Clutch	• Check operation and adjust if necessary.		√		√	√	√
3	*	Front brake	• Check operation and correct if necessary. • Check fluid level and ATV for fluid leakage, and correct if necessary.		√	√	√	√	√
			• Replace brake pads.		Whenever worn to the limit				
4	*	Rear brake	• Check operation and correct if necessary. • Check fluid level and ATV for fluid leakage, and correct if necessary.		√	√	√	√	√
			• Replace brake pads.		Whenever worn to the limit				
5	*	Brake hoses	• Check for cracks or other damage, and replace if necessary.			√	√	√	√
			• Replace.		Every 4 years				
6	*	Brake fluid	• Replace.		Every 2 years				
7	*	Parking brake	• Check operation and adjust if necessary.		√	√	√	√	√
8	*	Wheels	• Check runout and for damage, and replace if necessary.		√		√	√	√
9	*	Tires	• Check tread depth and for damage, and replace if necessary. • Check air pressure and balance, and correct if necessary.		√		√	√	√
10	*	Wheel hub bearings	• Check for looseness or damage, and replace if necessary.		√		√	√	√
11	*	Swingarm pivots	• Check operation and for excessive play, and replace bearings if necessary. • Lubricate with lithium-soap-based grease.				√	√	√
12	*	Upper and lower arm pivots	• Lubricate with lithium-soap-based grease.				√	√	√
13		Drive chain	• Check chain slack and adjust if necessary. • Check rear wheel alignment and correct if necessary. • Clean and lubricate.		√	√	√	√	√
14	*	Drive chain roller	• Check for wear and replace if necessary.				√	√	√
15	*	Chassis fasteners	• Make sure that all nuts, bolts, and screws are properly tightened.		√	√	√	√	√
16	*	Shock absorber assemblies	• Check operation and correct if necessary. • Check for oil leakage and replace if necessary.				√	√	√
17	*	Rear suspension relay arm and connecting arm pivoting points	• Check operation and correct if necessary. • Lubricate with lithium-soap-based grease.			√	√	√	√
18	*	Steering shaft	• Lubricate with lithium-soap-based grease.				√	√	√
19	*	Steering system	• Check operation and repair or replace if damaged. • Check toe-in and adjust if necessary.		√	√	√	√	√
20	*	Engine mount	• Check for cracks or other damage, and replace if necessary.				√	√	√
21		Engine oil	• Change. • Check ATV for oil leakage, and correct if necessary.		√		√	√	√
22		Engine oil filter element	• Replace.		√		√		√
23		Cooling system	• Check coolant level and ATV for coolant leakage, and correct if necessary.		√	√	√	√	√
			• Replace coolant.		Every 2 years				
24	*	Moving parts and cables	• Lubricate.			√	√	√	√

NO.		ITEM	CHECK OR MAINTENANCE JOB	Whichever comes first ⇨		INITIAL			EVERY	
					month	1	3	6	6	12
					km (mi)	320 (200)	1300 (800)	2500 (1600)	2500 (1600)	5000 (3200)
					hours	20	80	160	160	320
25	*	Reverse lock release cable	• Check operation and adjust or replace if necessary.					√	√	√
26	*	Throttle lever	• Check operation. • Check throttle lever free play, and adjust if necessary. • Lubricate cable and lever housing.			√	√	√	√	√
27	*	Front and rear brake switches	• Check operation and correct if necessary.			√	√	√	√	√
28	*	Lights and switches	• Check operation and correct if necessary. • Adjust headlight beams.			√	√	√	√	√

EBU23072

TIP

- Some maintenance items need more frequent service if you are riding in unusually wet, dusty, sandy or muddy areas, or at full-throttle.
- Hydraulic brake service
  - Regularly check and, if necessary, correct the brake fluid level.
  - Every two years replace the internal components of the brake master cylinders and calipers, and change the brake fluid.
  - Replace the brake hoses every four years and if cracked or damaged.

EAS20472

ENGINE

EAS20520

ADJUSTING THE VALVE CLEARANCE

The following procedure applies to all of the valves.

TIP

- Valve clearance adjustment should be made on a cold engine, at room temperature.
- When the valve clearance is to be measured or adjusted, the piston must be at top dead center (TDC) on the compression stroke.

1. Remove:
   - Seat
   - Front fender
   - Fuel tank

   Refer to "GENERAL CHASSIS" on page 4-1.
2. Remove:
   - Intake tappet cover
   - Exhaust tappet cover "1"
   - Camshaft sprocket cover "2"

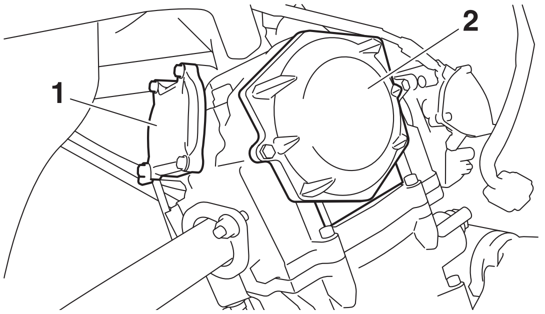

3. Disconnect:
   - Spark plug cap "1"
4. Remove:
   - Spark plug "2"

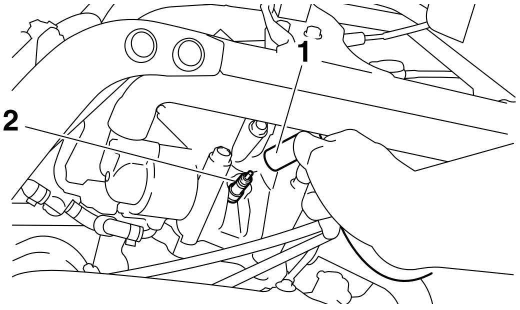

5. Remove:
   - Timing mark accessing screw "1"
   - Crankshaft end accessing screw "2"

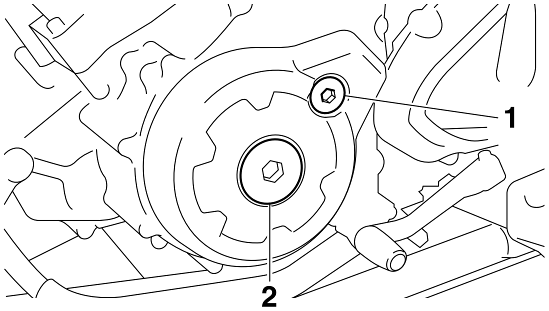

6. Measure:
   - Valve clearance

   Out of specification → Adjust.

Valve clearance (cold)
Intake
0.09–0.13 mm (0.0035–0.0051 in)
Exhaust
0.16–0.20 mm (0.0063–0.0079 in)

▼▼▼▼▼▼▼▼▼▼▼▼▼▼▼▼▼▼▼▼▼▼▼▼▼▼▼▼▼▼▼▼▼▼▼

a. Turn the crankshaft counterclockwise.

b. When the piston is at TDC on the compression stroke, align the punch mark "a" in the camshaft sprocket with the stationary pointer "b" on the cylinder head.

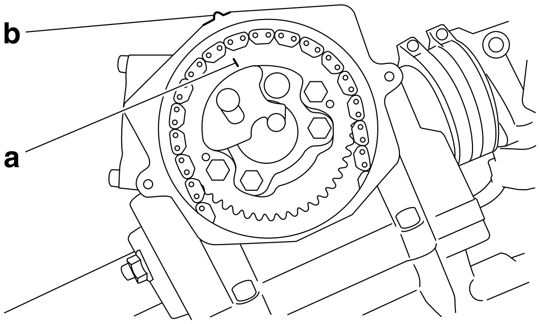

c. Align the TDC mark "c" on the AC magneto rotor with the stationary pointer "d" on the AC magneto cover.

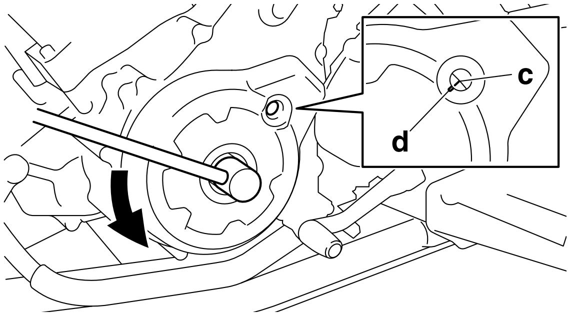

d. Measure the valve clearance with a thickness gauge "1".
Out of specification → Adjust.

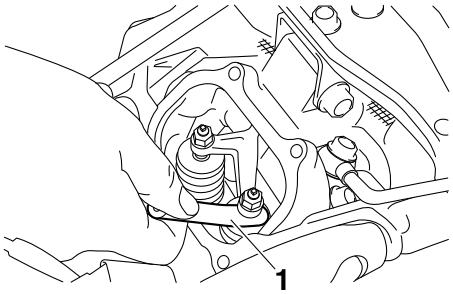

▲▲▲▲▲▲▲▲▲▲▲▲▲▲▲▲▲▲▲▲▲▲▲▲▲▲▲▲▲▲▲▲▲▲

7. Adjust:
   - Valve clearance

▼▼▼▼▼▼▼▼▼▼▼▼▼▼▼▼▼▼▼▼▼▼▼▼▼▼▼▼▼▼▼▼▼▼

a. Loosen the locknut “1”.
b. Insert a thickness gauge “2” between the end of the adjusting screw and the valve tip.
c. Turn the adjusting screw “3” with the tappet adjusting tool “4” in direction “a” or “b” until the specified valve clearance is obtained.

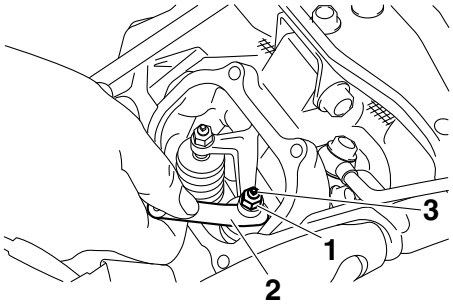

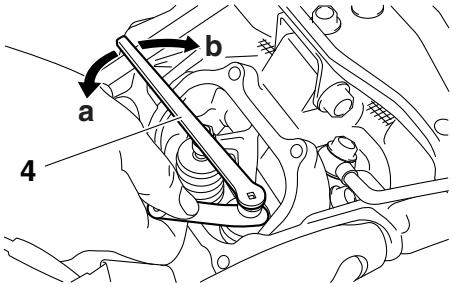

Direction “a”
Valve clearance is increased.
Direction “b”
Valve clearance is decreased.

Tappet adjusting tool
90890-01311
Six piece tappet set
YM-A5970

- Hold the adjusting screw to prevent it from moving and tighten the locknut to specification.

Locknut
14 Nm (1.4 m·kg, 10 ft·lb)

d. Measure the valve clearance again.
e. If the valve clearance is still out of specification, repeat all of the valve clearance adjustment steps until the specified clearance is obtained.

▲▲▲▲▲▲▲▲▲▲▲▲▲▲▲▲▲▲▲▲▲▲▲▲▲▲▲▲▲▲▲▲▲▲

8. Install:
   - Timing mark accessing screw
   - Crankshaft end accessing screw
   - Spark plug

Timing mark accessing screw
2 Nm (0.2 m·kg, 1.4 ft·lb)
Crankshaft end accessing screw
2 Nm (0.2 m·kg, 1.4 ft·lb)
Spark plug
13 Nm (1.3 m·kg, 9.4 ft·lb)

9. Connect:
   - Spark plug cap
10. Install:
   - O-ring New
   - Camshaft sprocket cover
   - O-ring “1” New
   - Intake tappet cover
   - O-ring New
   - Exhaust tappet cover

Camshaft sprocket cover bolt
10 Nm (1.0 m·kg, 7.2 ft·lb)
Intake tappet cover bolt
10 Nm (1.0 m·kg, 7.2 ft·lb)
Exhaust tappet cover bolt
10 Nm (1.0 m·kg, 7.2 ft·lb)

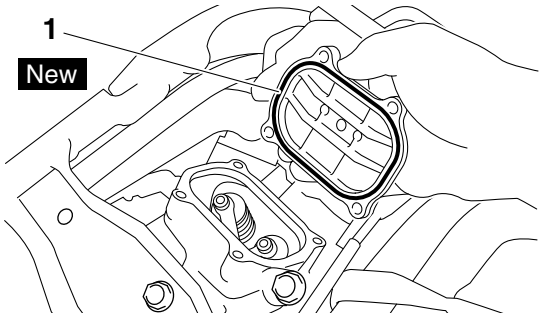

11. Install:
   - Fuel tank

- Front fender
- Seat
  Refer to "GENERAL CHASSIS" on page 4-1.

EAS20620

ADJUSTING THE ENGINE IDLING SPEED

1. Start the engine and let it warm up for several minutes.
2. Install:
   - Digital tachometer
     (onto the spark plug lead)
3. Check:
   - Engine idling speed
     Out of specification → Adjust.

Engine idling speed
1500–1700 r/min

4. Adjust:
   - Engine idling speed

▼▼▼▼▼▼▼▼▼▼▼▼▼▼▼▼▼▼▼▼▼▼▼▼▼▼▼▼▼▼▼▼▼▼▼▼

a. Turn the throttle stop screw "1" in direction "a" or "b" until the specified engine idling speed is obtained.

Direction "a"
Engine idling speed is increased.
Direction "b"
Engine idling speed is decreased.

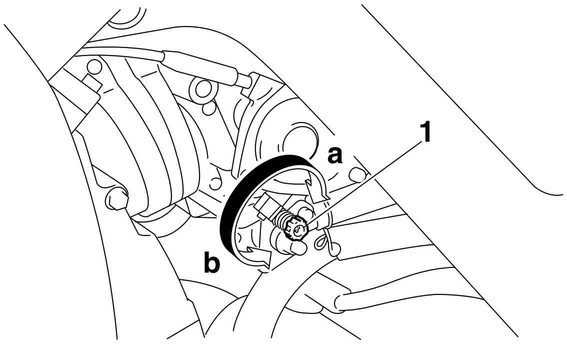

▲▲▲▲▲▲▲▲▲▲▲▲▲▲▲▲▲▲▲▲▲▲▲▲▲▲▲▲▲▲▲▲▲▲▲▲

5. Adjust:
   - Throttle lever free play
     Refer to "ADJUSTING THE THROTTLE LEVER FREE PLAY" on page 3-6.

Throttle lever free play
2.0–4.0 mm (0.08–0.16 in)

EAS1S3L006

ADJUSTING THE THROTTLE LEVER FREE PLAY

TIP

Prior to adjusting the throttle lever free play, the engine idling speed should be adjusted.

1. Check:
   - Throttle lever free play "a"
     Out of specification → Adjust.

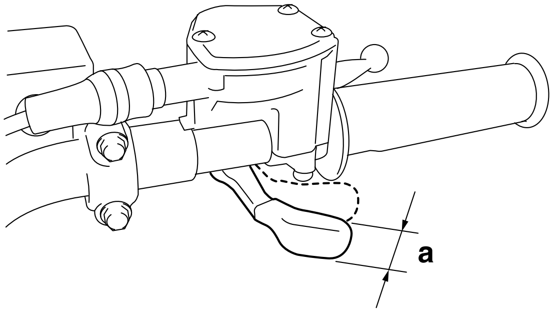

Throttle lever free play
2.0–4.0 mm (0.08–0.16 in)

2. Adjust:
   - Throttle lever free play

▼▼▼▼▼▼▼▼▼▼▼▼▼▼▼▼▼▼▼▼▼▼▼▼▼▼▼▼▼▼▼▼▼▼▼▼

Throttle body side

a. Slide back the rubber cover "1".
b. Loosen the locknut "2".
c. Turn the adjusting nut "3" in direction "a" or "b" until the specified throttle lever free play is obtained.

Direction "a"
Throttle lever free play is increased.
Direction "b"
Throttle lever free play is decreased.

d. Tighten the locknut.

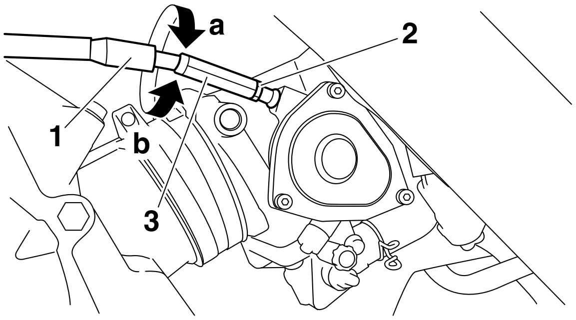

TIP

If the specified throttle lever free play cannot be obtained on the throttle body side of the cable, use the adjusting nut on the throttle lever side.

▲▲▲▲▲▲▲▲▲▲▲▲▲▲▲▲▲▲▲▲▲▲▲▲▲▲▲▲▲▲▲▲

▼▼▼▼▼▼▼▼▼▼▼▼▼▼▼▼▼▼▼▼▼▼▼▼▼▼▼▼▼▼▼▼

Throttle lever side

a. Slide back the rubber cover “4”.
b. Loosen the locknut “5”.
c. Turn the adjusting bolt “6” in direction “c” or “d” until the specified throttle lever free play is obtained.

Direction “c”
Throttle lever free play is increased.
Direction “d”
Throttle lever free play is decreased.

d. Tighten the locknut.

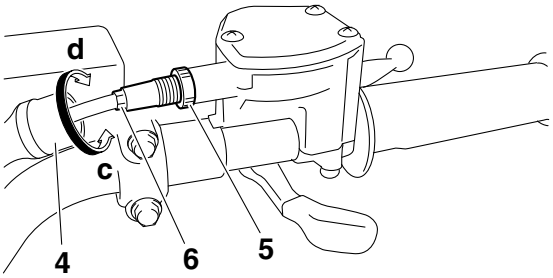

EWA1S3L001

WARNING

After adjusting the throttle lever free play, start the engine and turn the handlebar to the right or left to ensure that this does not cause the engine idling speed to change.

▲▲▲▲▲▲▲▲▲▲▲▲▲▲▲▲▲▲▲▲▲▲▲▲▲▲▲▲▲▲▲▲

EAS29170

ADJUSTING THE SPEED LIMITER

The speed limiter keeps the throttle from becoming fully-opened even when the throttle lever is applied to the maximum position. Screwing in the adjusting screw stops the engine speed from increasing.

1. Measure:
   - Speed limiter length “a”
     Out of specification → Adjust.

Speed limiter length
Less than 12 mm (0.47 in)

2. Adjust:
   - Speed limiter length “a”

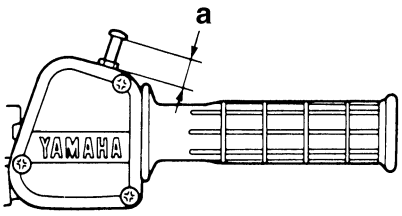

▼▼▼▼▼▼▼▼▼▼▼▼▼▼▼▼▼▼▼▼▼▼▼▼▼▼▼▼▼▼▼▼

a. Loosen the locknut “1”.
b. Turn the adjuster “2” clockwise or counterclockwise until the specified speed limiter length is obtained.

Clockwise
Speed limiter length is decreased.
Counterclockwise
Speed limiter length is increased.

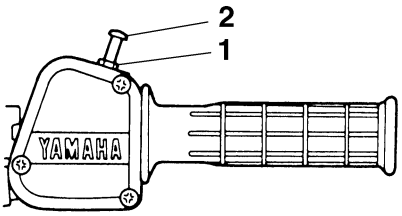

c. Tighten the locknut.

EWA14880

WARNING

- **Particularly for a beginner rider, the speed limiter should be screwed in completely. Screw it out little by little as their riding technique improves. Never remove the speed limiter for a beginning rider.**
- **For proper throttle lever operation, do not turn out the adjuster more than the specified length. Also, always adjust the throttle cable free play to within specification.**

▲▲▲▲▲▲▲▲▲▲▲▲▲▲▲▲▲▲▲▲▲▲▲▲▲▲▲▲▲▲▲▲

EAS20690

CHECKING THE SPARK PLUG

1. Disconnect:
   - Spark plug cap
2. Remove:
   - Spark plug

ECA13330

NOTICE

Before removing the spark plug, blow away any dirt accumulated in the spark plug well with compressed air to prevent it from falling into the cylinder.

3. Check:
   - Spark plug type
     Incorrect → Change.

Manufacturer/model
NGK/CR8E

4. Check:
   - Electrode “1”
     Damage/wear → Replace the spark plug.
   - Insulator “2”
     Abnormal color → Replace the spark plug.
     Normal color is medium-to-light tan.

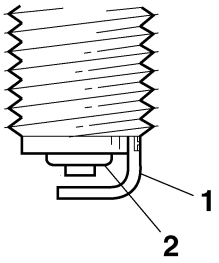

5. Clean:
   - Spark plug
     (with a spark plug cleaner or wire brush)
6. Measure:
   - Spark plug gap “a”
     (with a wire thickness gauge)
     Out of specification → Regap.

Spark plug gap
0.7–0.8 mm (0.028–0.031 in)

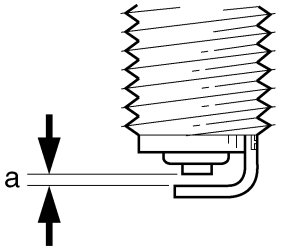

7. Install:
   - Spark plug

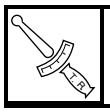

Spark plug
13 Nm (1.3 m·kg, 9.4 ft·lb)

TIP

Before installing the spark plug, clean the spark plug and gasket surface.

8. Connect:
   - Spark plug cap

EAS20710

MEASURING THE COMPRESSION PRESSURE

TIP

Insufficient compression pressure will result in a loss of performance.

1. Measure:
   - Valve clearance
     Out of specification → Adjust.
     Refer to “ADJUSTING THE VALVE CLEARANCE” on page 3-4.
2. Start the engine, warm it up for several minutes, and then turn it off.
3. Disconnect:
   - Spark plug cap
4. Remove:
   - Spark plug

ECA1S3L026

NOTICE

Before removing the spark plug, use compressed air to blow away any dirt accumulated in the spark plug well to prevent it from falling into the cylinder.

5. Install:
   - Extension
   - Compression gauge “1”

Extension
90890-04082
Compression gauge
90890-03081
Engine compression tester
YU-33223

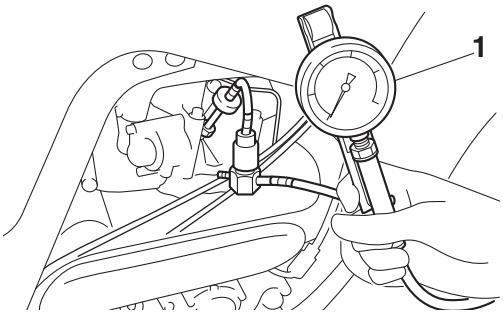

6. Measure:
   - Compression pressure
     Out of specification → Refer to steps (c) and (d).

Standard compression pressure (at sea level)
570 kPa (5.7 kgf/cm², 81.1 psi)
Minimum-maximum
500–640 kPa (5.0–6.4 kgf/cm², 71.1–91.0 psi)

▼▼▼▼▼▼▼▼▼▼▼▼▼▼▼▼▼▼▼▼▼▼▼▼▼▼▼▼▼▼▼▼▼

a. Set the main switch to “ON”.
b. With the throttle wide open, crank the engine until the reading on the compression gauge stabilizes.

ECA1S3L004

NOTICE

Before removing the spark plug, use compressed air to blow away any dirt accumulated in the spark plug well to prevent it from falling into the cylinder.

c. If the compression pressure is above the maximum specification, check the cylinder head, valve surfaces and piston crown for carbon deposits.
   Carbon deposits → Eliminate.
d. If the compression pressure is below the minimum specification, pour a teaspoonful of engine oil into the spark plug bore and measure again.
   Refer to the following table.

Compression pressure (with oil applied into the cylinder)	
Reading	Diagnosis
Higher than without oil	Piston ring(s) wear or damage → Repair.
Same as without oil	Piston, valves, cylinder head gasket or piston ring(s) possibly defective → Repair.

▲▲▲▲▲▲▲▲▲▲▲▲▲▲▲▲▲▲▲▲▲▲▲▲▲▲▲▲▲▲▲▲▲

7. Install:
   - Spark plug

Spark plug
13 Nm (1.3 m·kg, 9.4 ft·lb)

8. Connect:
   - Spark plug cap

EAS20750

CHECKING THE ENGINE OIL LEVEL

1. Place the vehicle on a level surface.
2. Start the engine, warm it up until the engine oil has reached a normal temperature of 60 °C (140 °F), let it continue to idle for ten seconds, and then turn the engine off.

TIP

To achieve the proper engine oil temperature for an accurate oil level reading, the engine must have first completely cooled down, and then warmed up again for several minutes to normal operating temperature.

3. Check:
   - Engine oil level
     The engine oil level should be between the minimum level mark “a” and maximum level mark “b”.
     Below the minimum level mark → Add the recommended engine oil to the proper level.

TIP

- Wait a few minutes until the oil settles before checking the oil level.
- Do not screw the dipstick “1” in when checking the oil level.

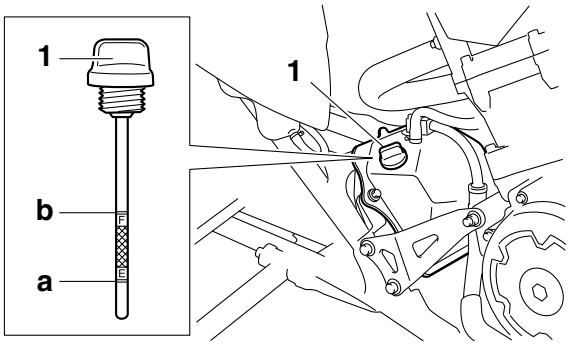

Recommended brand
YAMALUBE
Type
SAE 5W-30, 10W-30, 10W-40, 15W-40, 20W-40 or 20W-50
Recommended engine oil grade
API service SG type or higher, JASO standard MA

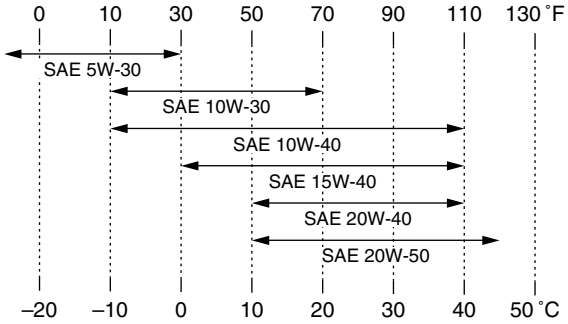

ECA1S3L023

NOTICE

- **Engine oil also lubricates the clutch and the wrong oil types or additives could cause clutch slippage. Therefore, do not add any chemical additives or use engine oils with a grade of CD "c" or higher and do not use oils labeled "ENERGY CONSERVING II" "d".**
- **Do not allow foreign materials to enter the crankcase.**

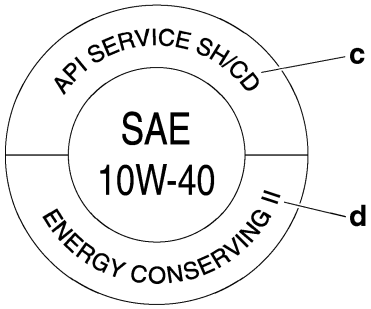

4. Start the engine, warm it up for several minutes, and then turn it off.
5. Check the engine oil level again.

TIP

Before checking the engine oil level, wait a few minutes until the oil has settled.

EAS20800

CHANGING THE ENGINE OIL

1. Start the engine, warm it up for several minutes, and then turn it off.
2. Place a container under the engine oil drain bolt.
3. Remove:
   - Engine oil filler bolt "1"
   - Dipstick "2"

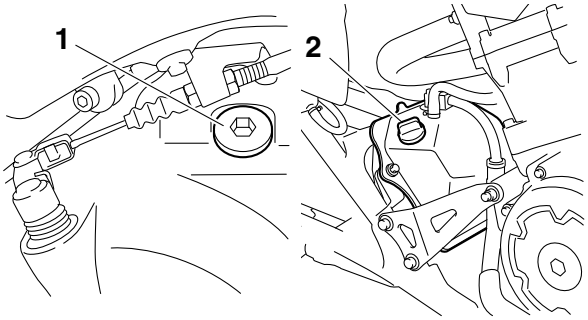

4. Remove:
   - Engine oil drain bolt (oil tank) "1" (along with the gasket)

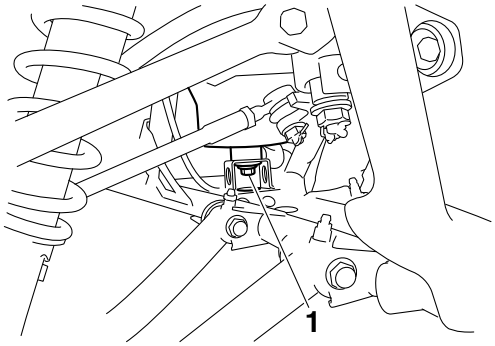

5. Remove:
   - Engine oil drain bolt (crankcase) "1" (along with the gasket)

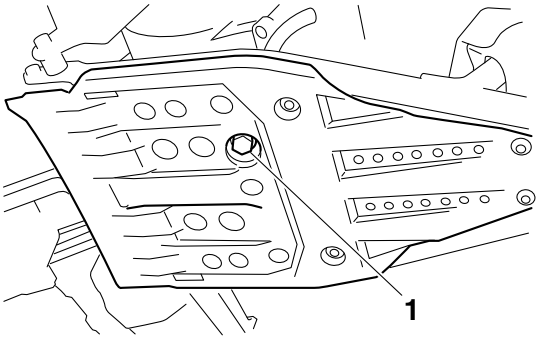

6. Remove:
   - Oil filter element drain bolt “1”

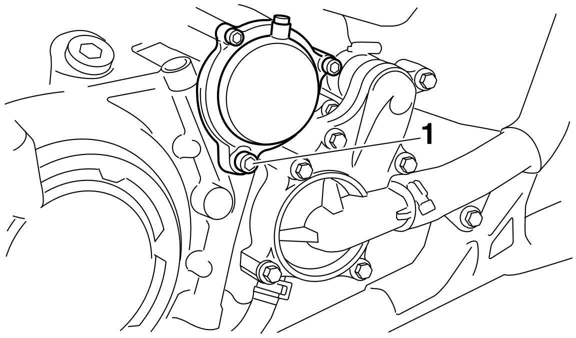

7. Drain:
   - Engine oil
     (completely from the oil tank and crankcase)
8. If the oil filter element is also to be replaced, perform the following procedure.

▼▼▼▼▼▼▼▼▼▼▼▼▼▼▼▼▼▼▼▼▼▼▼▼▼▼▼▼▼▼▼▼▼

a. Remove the oil filter element cover “1” and oil filter element “2”.
b. Check the O-rings “3” and replace them if they are cracked or damaged.

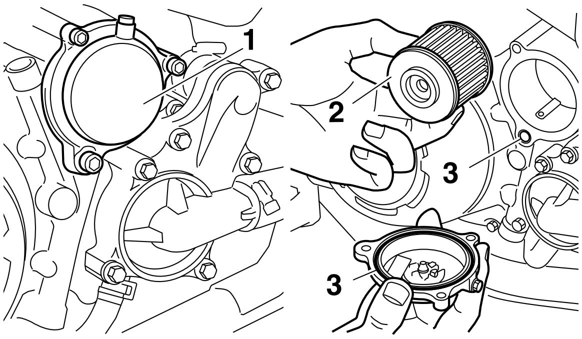

c. Install the new oil filter element and the oil filter element cover.

Oil filter element cover bolt
10 Nm (1.0 m·kg, 7.2 ft·lb)

▲▲▲▲▲▲▲▲▲▲▲▲▲▲▲▲▲▲▲▲▲▲▲▲▲▲▲▲▲▲▲▲▲

9. Check:
   - Engine oil drain bolt gasket
     Damage → Replace.
10. Install:
    - Engine oil drain bolt (crankcase)
      (along with the gasket)
    - Engine oil drain bolt (oil tank)
      (along with the gasket)

Engine oil drain bolt (crankcase)
23 Nm (2.3 m·kg, 17 ft·lb)
Engine oil drain bolt (oil tank)
19 Nm (1.9 m·kg, 13 ft·lb)

- Oil filter element drain bolt
  (along with the gasket)

Oil filter element drain bolt
10 Nm (1.0 m·kg, 7.2 ft·lb)

11. Fill:
    - Oil tank
    - Crankcase
      (with the specified amount of the recommended engine oil)

Engine oil quantity
Total amount
2.30 L (2.43 US qt, 2.02 Imp.qt)
Without oil filter element replacement
1.75 L (1.85 US qt, 1.54 Imp.qt)
With oil filter element replacement
1.85 L (1.96 US qt, 1.63 Imp.qt)

12. Install:
    - Dipstick
    - Engine oil filler bolt

Oil filter bolt
12 Nm (1.2 m·kg, 8.7 ft·lb)

13. Start the engine, warm it up for several minutes, and then turn it off.
14. Check:
    - Engine
      (for engine oil leaks)
15. Check:
    - Engine oil level
      Refer to “CHECKING THE ENGINE OIL LEVEL” on page 3-9.
16. Check:
    - Engine oil pressure

▼▼▼▼▼▼▼▼▼▼▼▼▼▼▼▼▼▼▼▼▼▼▼▼▼▼▼▼▼▼▼▼▼

a. Slightly loosen the oil check bolt “1”.

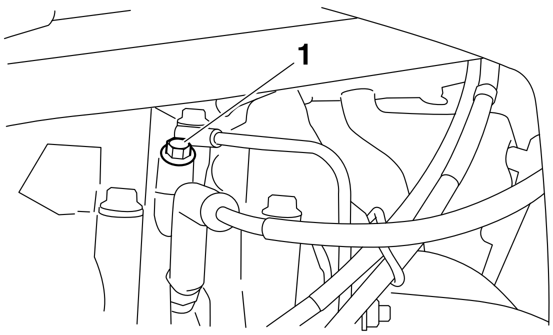

b. Start the engine and keep it idling until engine oil starts to seep from the oil check bolt. If no engine oil comes out after one minute, turn the engine off so that it will not seize.
c. Check the engine oil passages, the oil filter element and the oil pump for damage or leakage. Refer to “OIL PUMP” on page 5-50.
d. Start the engine after solving the problem(s) and check the engine oil pressure again.
e. Tighten the oil check bolt to specification.

	**Oil check bolt** **10 Nm (1.0 m·kg, 7.2 ft·lb)**

▲▲▲▲▲▲▲▲▲▲▲▲▲▲▲▲▲▲▲▲▲▲▲▲▲▲▲▲▲▲▲▲

EAS1S3L043

ADJUSTING THE CLUTCH LEVER FREE PLAY

1. Check:
   - Clutch lever free play “a”
     Out of specification → Adjust.

	**Clutch lever free play (lever end)** **8.0–13.0 mm (0.31–0.51 in)**

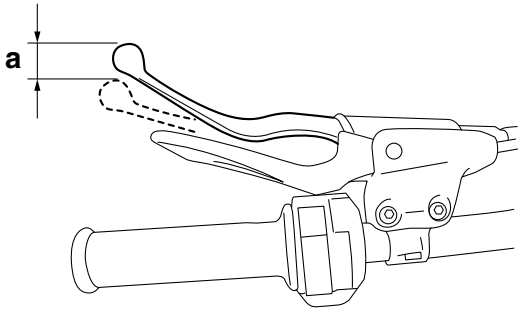

2. Adjust:
   - Clutch lever free play

▼▼▼▼▼▼▼▼▼▼▼▼▼▼▼▼▼▼▼▼▼▼▼▼▼▼▼▼▼▼▼▼

Handlebar side

a. Pull back the rubber cover “1”.
b. Loosen the locknut “2”.
c. Turn the adjusting bolt “3” clockwise or counterclockwise until the specified clutch lever free play is obtained.

Clockwise **Clutch lever free play is increased.** **Counterclockwise** **Clutch lever free play is decreased.**

d. Tighten the locknut.

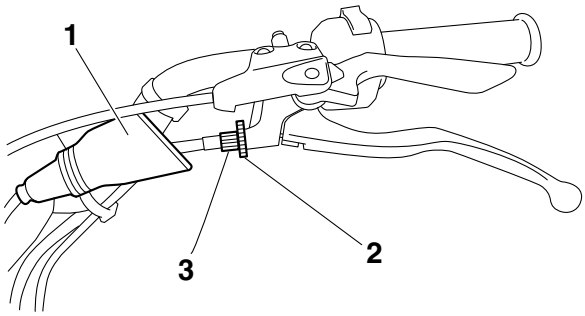

TIP

If the specified clutch cable free play cannot be obtained on the handlebar side of the cable, use the adjusting nut on the engine side.

▲▲▲▲▲▲▲▲▲▲▲▲▲▲▲▲▲▲▲▲▲▲▲▲▲▲▲▲▲▲▲▲

▼▼▼▼▼▼▼▼▼▼▼▼▼▼▼▼▼▼▼▼▼▼▼▼▼▼▼▼▼▼▼▼

Engine side

a. Loosen the locknut “4”.
b. Turn the adjusting bolt “5” until the specified clutch cable free play is obtained.
c. Tighten the locknut.

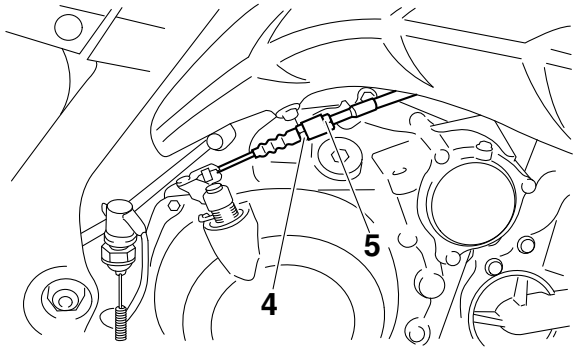

▲▲▲▲▲▲▲▲▲▲▲▲▲▲▲▲▲▲▲▲▲▲▲▲▲▲▲▲▲▲▲▲

EAS20941

CLEANING THE AIR FILTER ELEMENT

TIP

On the bottom of the air filter case is a check hose “1”. If dust or water or both collects in this hose, clean the air filter element and air filter case.

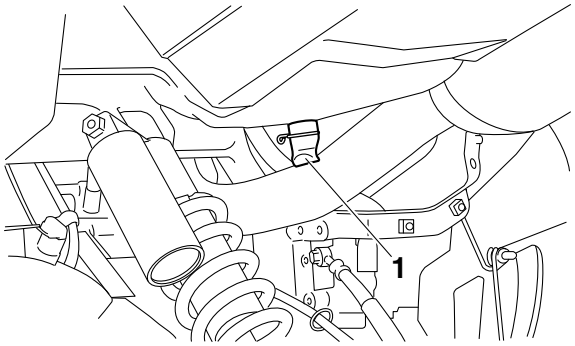

1. Remove:
   - Seat
     Refer to “GENERAL CHASSIS” on page 4-1.
2. Remove:
   - Air filter case cover “1”

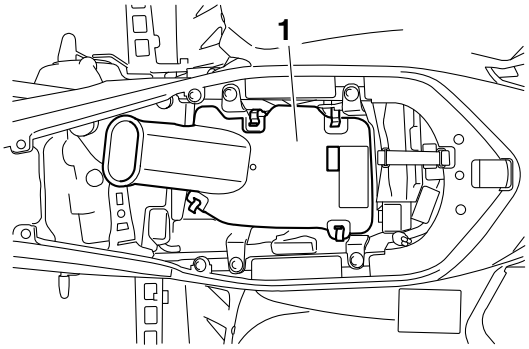

3. Remove:
   - Wing bolt “1”
   - Air filter element “2”
   - Air filter element frame “3”

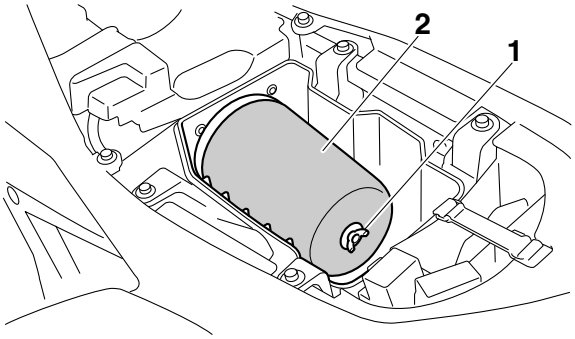

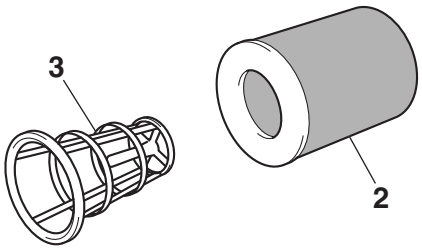

4. Clean:
   - Air filter element
     (with solvent)

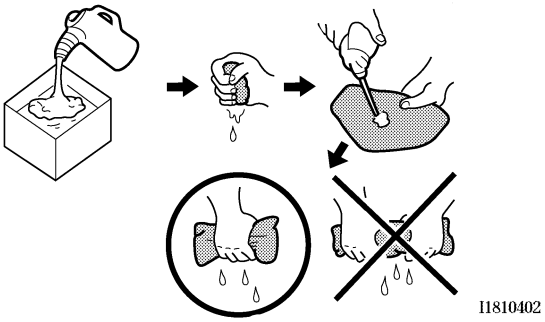

EWA13020

WARNING

Never use low flash point solvents, such as gasoline, to clean the air filter element. Such solvents may cause a fire or an explosion.

TIP

After cleaning, gently squeeze the air filter element to remove the excess solvent.

ECA13430

NOTICE

Do not twist the air filter element when squeezing it.

5. Check:
   - Air filter element
     Damage → Replace.
6. Apply the recommended oil to the entire surface of the air filter element and squeeze out the excess oil. The air filter element should be wet but not dripping.

	Air filter oil grade **Foam air filter oil**

7. Install:
   - Air filter element frame
   - Air filter element
   - Wing bolt
   - Air filter case cover

ECA14401

NOTICE

Never operate the engine without the air filter element installed. Unfiltered air will cause rapid wear of engine parts and may damage the engine. Operating the engine without the air filter element will also affect carburetor synchronization, leading to poor engine performance and possible overheating.

8. Install:
   - Seat
     Refer to “GENERAL CHASSIS” on page 4-1.

EAS2LS1002

CHECKING THE AIR INDUCTION SYSTEM

Refer to “CHECKING THE AIR INDUCTION SYSTEM” on page 7-13.

EAS21020

CHECKING THE THROTTLE BODY JOINT

1. Check:
   - Throttle body joint “1”
     Cracks/damage → Replace.

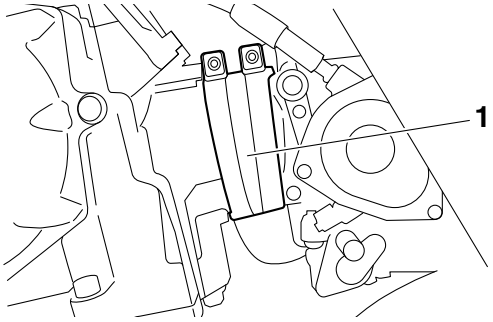

EAS21030
CHECKING THE FUEL LINE
1. Remove:
   - Seat
   - Front fender
   - Fuel tank
   Refer to “GENERAL CHASSIS” on page 4-1.
2. Check:
   - Fuel hose “1”
   Cracks/damage → Replace.
   Loose connection → Connect properly.

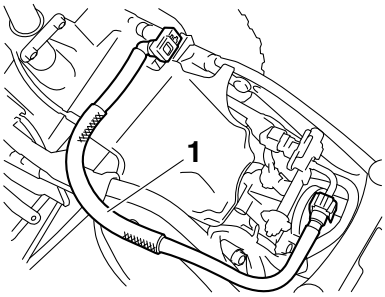

3. Install:
   - Seat
   - Front fender
   - Fuel tank
   Refer to “GENERAL CHASSIS” on page 4-1.

EAS21070
CHECKING THE CRANKCASE BREATHER HOSE
1. Check:
   - Crankcase breather hose “1”
   - Hose (throttle-body-joint-to-throttle-body-left side) “2”
   Cracks/damage → Replace.
   Loose connection → Connect properly.

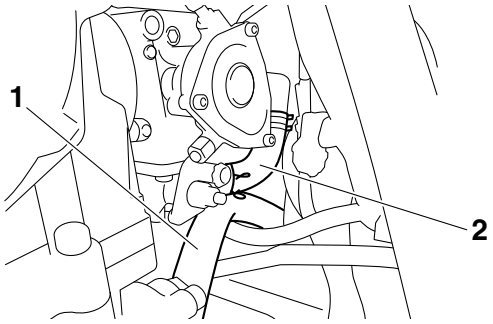

ECA13450
NOTICE

Make sure the crankcase breather hose is routed correctly.

EAS21080
CHECKING THE EXHAUST SYSTEM
The following procedure applies to all of the exhaust pipes and gaskets.
1. Check:
   - Exhaust pipe “1”
   - Muffler “2”
   - Muffler protector “3”
   - Exhaust pipe protector “4”
   Cracks/damage → Replace.
   - Gaskets “5”
   Exhaust gas leaks → Replace.
2. Check:
   - Tightening torque

Exhaust pipe nut “6”
20 Nm (2.0 m·kg, 14 ft·lb)
Muffler bolt “7”
38 Nm (3.8 m·kg, 27 ft·lb)
Exhaust pipe and muffler bolt “8”
18 Nm (1.8 m·kg, 13 ft·lb)
Muffler protector bolt “9”
7 Nm (0.7 m·kg, 5.1 ft·lb)
Exhaust pipe protector screw “10”
6 Nm (0.6 m·kg, 4.3 ft·lb)

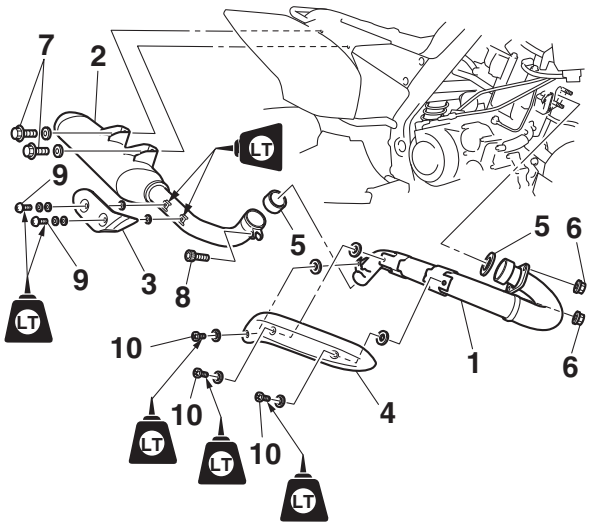

EAS28970

CLEANING THE SPARK ARRESTER

1. Clean:
   - Spark arrester

▼▼▼▼▼▼▼▼▼▼▼▼▼▼▼▼▼▼▼▼▼▼▼▼▼▼▼▼▼▼▼▼▼▼

EWA14680

WARNING

- **Select a well-ventilated area free of combustible materials.**
- **Always let the exhaust system cool before performing this operation.**
- **Do not start the engine when removing the tailpipe from the muffler.**

a. Remove the bolts “1”.
b. Remove the tailpipe cover “2”.

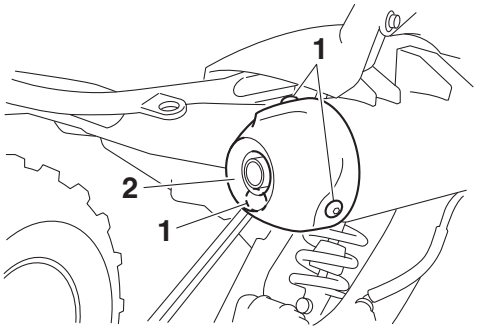

c. Remove the bolts “3”.
d. Remove the tailpipe cover bracket “4”.
e. Remove the tailpipe “5” by pulling it out of the muffler and the gasket “6”.

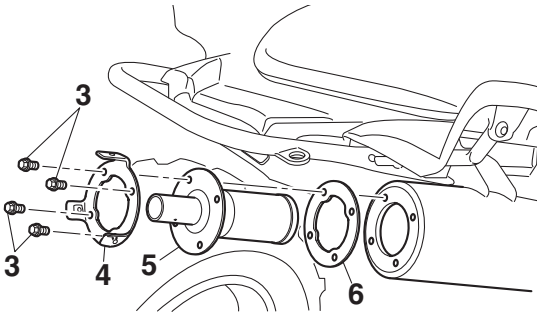

f. Tap the tailpipe lightly with a soft-face hammer or suitable tool, then use a wire brush to remove any carbon deposits from the spark arrester portion of the tailpipe and the inner contact surfaces of the muffler.

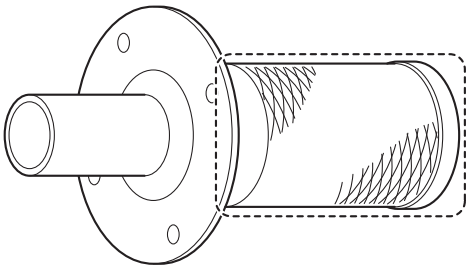

g. Install the gasket, tailpipe, and tailpipe cover bracket and align the bolt holes.
h. Insert the bolts and tighten it.

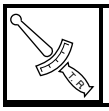	**Spark arrester bolt** **10 Nm (1.0 m·kg, 7.2 ft·lb)**

i. Install the tailpipe cover and align the bolt holes.
j. Insert the bolts and tighten it.

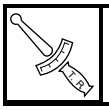	**Tailpipe cover bolt** **8 Nm (0.8 m·kg, 5.8 ft·lb)**

▲▲▲▲▲▲▲▲▲▲▲▲▲▲▲▲▲▲▲▲▲▲▲▲▲▲▲▲▲▲▲▲▲▲

EAS21110

CHECKING THE COOLANT LEVEL

1. Place the vehicle on a level surface.
2. Check:
   - Coolant level
     The coolant level should be between the minimum level mark “a” and maximum level mark “b”.
     Below the minimum level mark → Add the recommended coolant to the proper level.

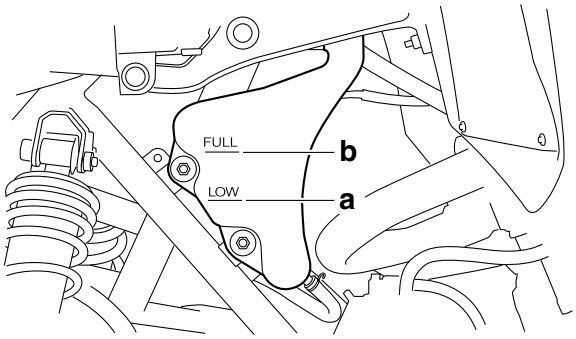

ECA13470

NOTICE

- **Adding water instead of coolant lowers the antifreeze content of the coolant. If water is used instead of coolant check, and if necessary, correct the antifreeze concentration of the coolant.**
- **Use only distilled water. However, if distilled water is not available, soft water may be used.**

Recommended antifreeze
High-quality ethylene glycol antifreeze containing corrosion inhibitors for aluminum engines
Mixing ratio
1:1 (antifreeze:water)

3. Start the engine, warm it up for several minutes, and then turn it off.
4. Check:
   - Coolant level

TIP

Before checking the coolant level, wait a few minutes until it settles.

EAS21120

CHECKING THE COOLING SYSTEM

1. Remove:
   - Seat
   - Front fender
   Refer to “GENERAL CHASSIS” on page 4-1.
2. Check:
   - Radiator “1”
   - Radiator outlet hose “2”
   - Radiator inlet hose “3”
   - Water pump assembly “4”
   - Water jacket inlet joint “5”
   - Water jacket outlet hose “6”
   Cracks/damage → Replace.
   Refer to “RADIATOR” on page 6-1, “THERMOSTAT” on page 6-3 and “WATER PUMP” on page 6-5.

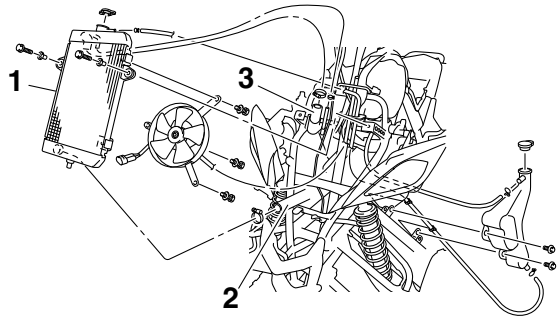

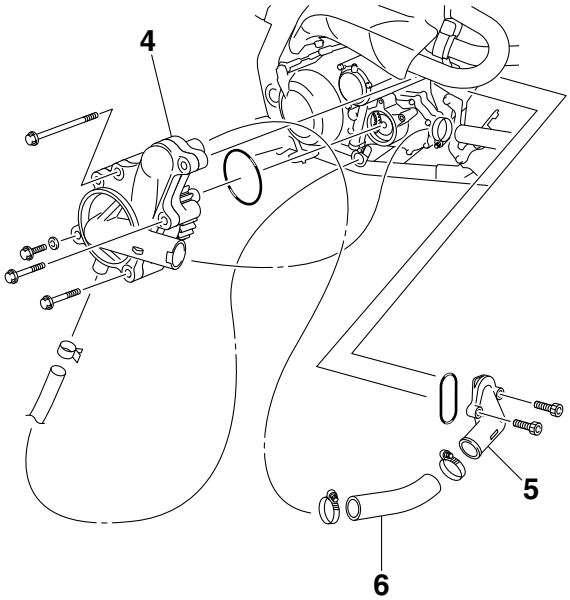

3. Install:
   - Front fender
   - Seat
   Refer to “GENERAL CHASSIS” on page 4-1.

EAS21130

CHANGING THE COOLANT

1. Remove:
   - Coolant reservoir cap “1”
2. Disconnect:
   - Coolant reservoir hose “2”

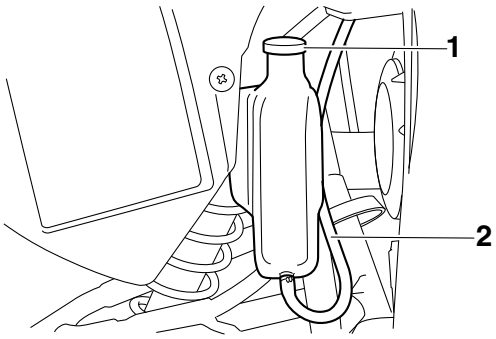

3. Drain:
   - Coolant
     (from the coolant reservoir)

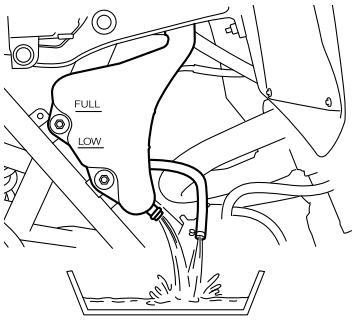

4. Connect:
   - Coolant reservoir hose
5. Remove:
   - Radiator cap “1”

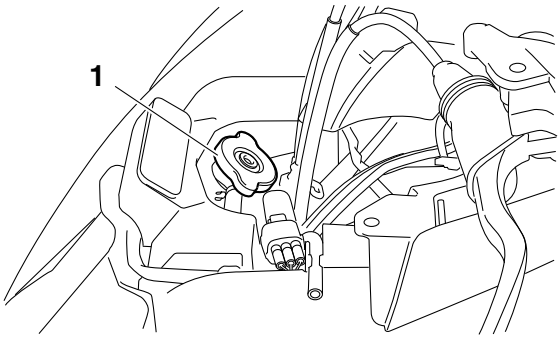

EWA13030

WARNING

A hot radiator is under pressure. Therefore, do not remove the radiator cap when the engine is hot. Scalding hot fluid and steam may be blown out, which could cause serious injury. When the engine has cooled, open the radiator cap as follows:
Place a thick rag or a towel over the radiator cap and slowly turn the radiator cap counterclockwise toward the detent to allow any residual pressure to escape. When the hissing sound has stopped, press down on the radiator cap and turn it counterclockwise to remove.

The following procedure applies to all of the coolant drain bolts and copper washers.

6. Remove:
   - Coolant drain bolt “1”
     (along with the copper washer)

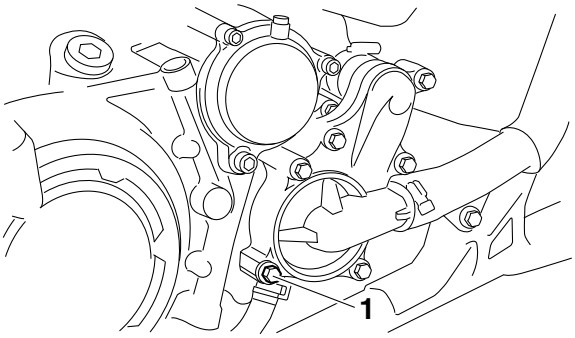

7. Drain:
   - Coolant
     (from the engine and radiator)
8. Check:
   - Coolant drain bolt “1”
     Damage → Replace.
9. Install:
   - Copper washer “2” New
   - Coolant drain bolt

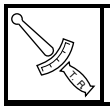	**Coolant drain bolt** **10 Nm (1.0 m·kg, 7.2 ft·lb)**

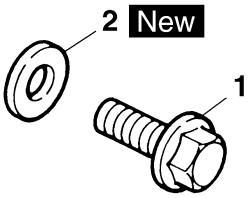

10. Remove:
    - Air bleed bolt “1”

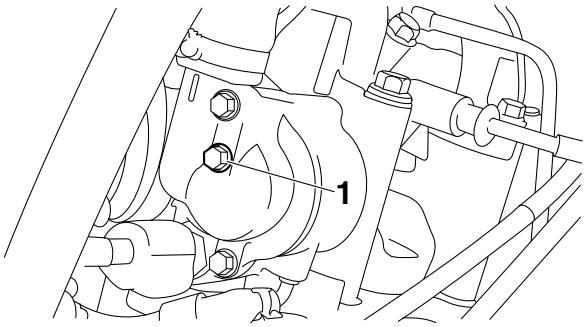

11. Fill:
    - Cooling system
      (with the specified amount of the recommended coolant)

Recommended antifreeze
High-quality ethylene glycol antifreeze containing corrosion inhibitors for aluminum engines
Mixing ratio
1:1 (antifreeze:water)
Radiator capacity (including all routes)
1.68 L (1.78 US qt, 1.48 Imp.qt)
Coolant reservoir capacity (up to the maximum level mark)
0.25 L (0.26 US qt, 0.22 Imp.qt)

Handling notes for coolant
Coolant is potentially harmful and should be handled with special care.

EWA13040
WARNING

- **If coolant splashes in your eyes, thoroughly wash them with water and consult a doctor.**
- **If coolant splashes on your clothes, quickly wash it away with water and then with soap and water.**
- **If coolant is swallowed, induce vomiting and get immediate medical attention.**

ECA13480
NOTICE

- **Adding water instead of coolant lowers the antifreeze content of the coolant. If water is used instead of coolant check, and if necessary, correct the antifreeze concentration of the coolant.**
- **Use only distilled water. However, if distilled water is not available, soft water may be used.**
- **If coolant comes into contact with painted surfaces, immediately wash them with water.**
- **Do not mix different types of antifreeze.**

12.Install:
- Air bleed bolt

Air bleed bolt
10 Nm (1.0 m·kg, 7.2 ft·lb)

13.Install:
- Radiator cap

14.Fill:
- Coolant reservoir
  (with the recommended coolant to the maximum level mark “a”)

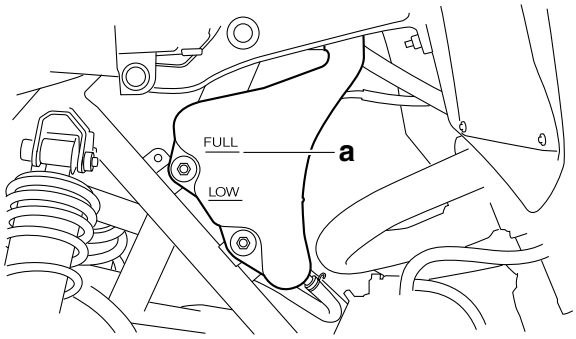

15.Install:
- Coolant reservoir cap

16.Start the engine, warm it up for several minutes, and then stop it.

17.Check:
- Coolant level
  Refer to “CHECKING THE COOLANT LEVEL” on page 3-15.

TIP
Before checking the coolant level, wait a few minutes until the coolant has settled.

EAS29360
CHASSIS

EAS21170
ADJUSTING THE FRONT DISC BRAKE (YFM700RSF)

1. Adjust:
   - Brake lever position “a”

▼▼▼▼▼▼▼▼▼▼▼▼▼▼▼▼▼▼▼▼▼▼▼▼▼▼▼▼▼▼▼▼▼▼

a. While pushing the brake lever forward, loosen the locknut “1”.
b. While pushing the brake lever forward, turn the adjusting bolt “2” in direction “b” or “c” until the brake lever is in the desired position.
c. Tighten the locknut “1”.

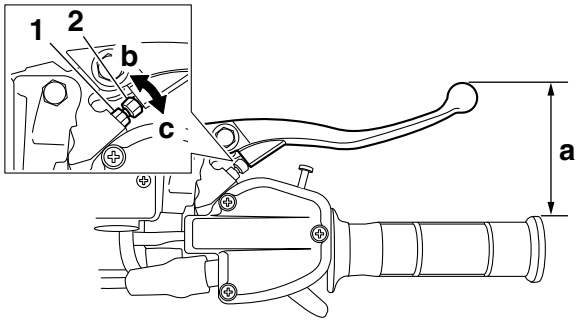

ECA1S3L005
NOTICE

Be sure to tighten the locknut, as failing to do so will cause poor brake performance.

▲▲▲▲▲▲▲▲▲▲▲▲▲▲▲▲▲▲▲▲▲▲▲▲▲▲▲▲▲▲▲▲▲▲

EAS29180
ADJUSTING THE REAR DISC BRAKE

1. Measure:
   - Brake pedal height “a”
     Out of specification → Adjust.

Brake pedal position (from footrest)
15.3 mm (0.60 in)

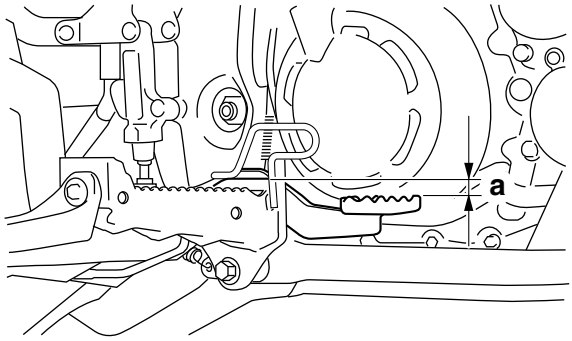

2. Adjust:
   - Brake pedal height

▼▼▼▼▼▼▼▼▼▼▼▼▼▼▼▼▼▼▼▼▼▼▼▼▼▼▼▼▼▼▼▼▼▼

a. Loosen the locknut “1”.
b. Turn the adjusting bolt “2” until the brake pedal height is within the specified limits.

Brake pedal position (from footrest)
15.3 mm (0.60 in)

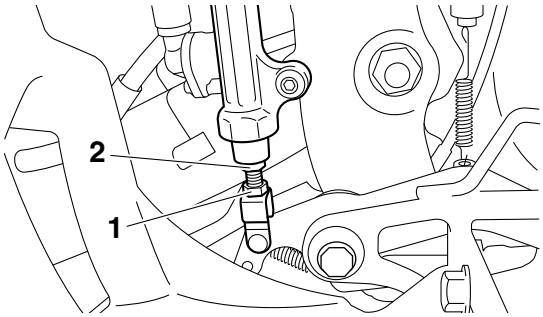

c. Tighten the locknut.

Locknut
17 Nm (1.7 m·kg, 12 ft·lb)

EWA14900
WARNING

After this adjustment is performed, lift the front and rear wheels off the ground by placing a block under the engine, and spin the rear wheels to ensure there is no brake drag. If any brake drag is noticed perform the above steps again.

▲▲▲▲▲▲▲▲▲▲▲▲▲▲▲▲▲▲▲▲▲▲▲▲▲▲▲▲▲▲▲▲▲▲

EAS21240
CHECKING THE BRAKE FLUID LEVEL

1. Place the vehicle on a level surface.
2. Check:
   - Brake fluid level
     Below the minimum level mark “a” → Add the specified brake fluid to the proper level.

Specified brake fluid
DOT 4

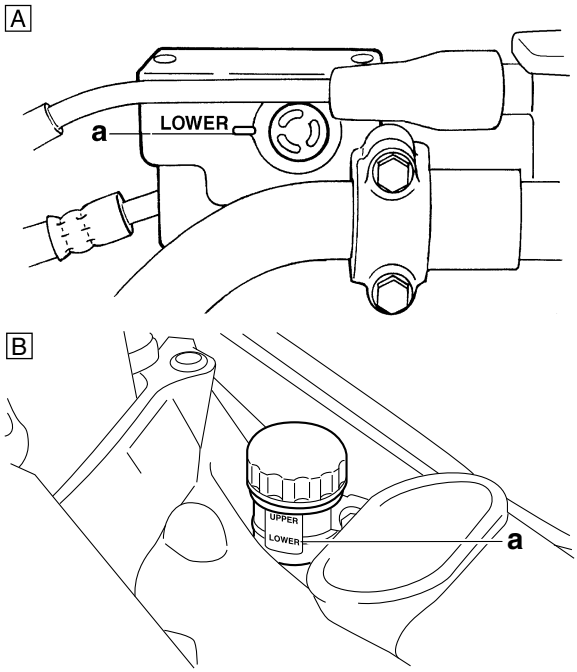

A. Front brake
B. Rear brake

EWA13090

WARNING

- **Use only the designated brake fluid. Other brake fluids may cause the rubber seals to deteriorate, causing leakage and poor brake performance.**
- **Refill with the same type of brake fluid that is already in the system. Mixing brake fluids may result in a harmful chemical reaction, leading to poor brake performance.**
- **When refilling, be careful that water does not enter the brake fluid reservoir. Water will significantly lower the boiling point of the brake fluid and could cause vapor lock.**

ECA13540

NOTICE

Brake fluid may damage painted surfaces and plastic parts. Therefore, always clean up any spilt brake fluid immediately.

TIP

In order to ensure a correct reading of the brake fluid level, make sure the top of the brake fluid reservoir is horizontal.

EAS21250

CHECKING THE FRONT BRAKE PADS

The following procedure applies to all of the brake pads.

1. Remove:
   - Front wheel
     Refer to “FRONT WHEELS” on page 4-5.
2. Check:
   - Front brake pad
     Wear indicator grooves “a” have almost disappeared → Replace the brake pads as a set.
     Refer to “FRONT BRAKES” on page 4-17.

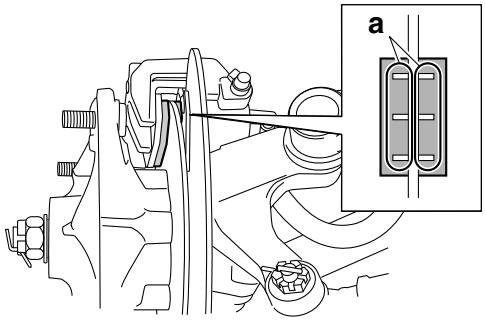

3. Operate the brake lever.
4. Install:
   - Front wheels
     Refer to “FRONT WHEELS” on page 4-5.

EAS21260

CHECKING THE REAR BRAKE PADS

1. Check:
   - Rear brake pad
     Wear indicator grooves “a” have almost disappeared → Replace the brake pads as a set.
     Refer to “REAR BRAKE” on page 4-28.

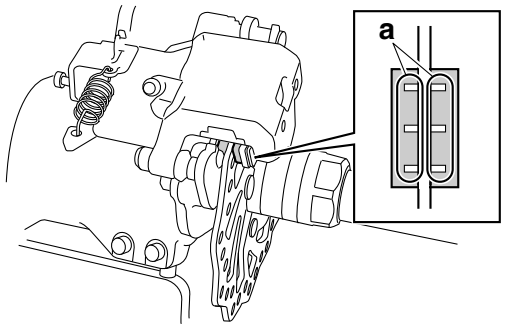

2. Operate the brake pedal.

EAS21280

CHECKING THE FRONT BRAKE HOSES

The following procedure applies to all of the brake hoses and brake hose clamps.

1. Remove:
   - Seat
   - Fuel tank top panel
   - Front fender
     Refer to “GENERAL CHASSIS” on page 4-1.

2. Check:
   - Brake hose “1”
     Cracks/damage/wear → Replace.

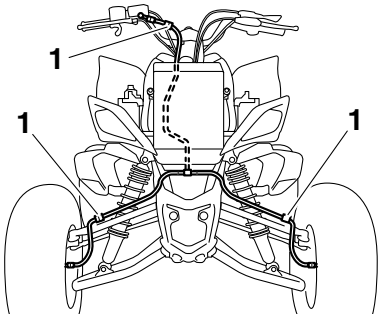

3. Check:
   - Brake hose clamp
     Loose → Tighten the clamp bolt.
4. Apply the front brake several times.
5. Check:
   - Brake hose
     Brake fluid leakage → Replace the damaged hose.
     Refer to “FRONT BRAKES” on page 4-17.
6. Install:
   - Front fender
   - Fuel tank top panel
   - Seat
     Refer to “GENERAL CHASSIS” on page 4-1.

EAS21290

CHECKING THE REAR BRAKE HOSE

1. Check:
   - Brake hose “1”
     Cracks/damage/wear → Replace.

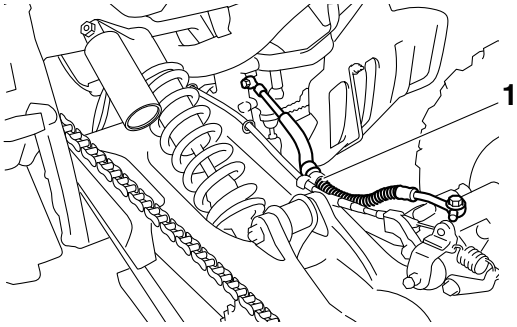

2. Check:
   - Brake hose clamp
     Loose connection → Tighten the clamp bolt.
3. Apply the rear brake several times.
4. Check:
   - Brake hose
     Brake fluid leakage → Replace the damaged hose.
     Refer to “REAR BRAKE” on page 4-28.

EAS29210

ADJUSTING THE PARKING BRAKE

1. Check:
   - Parking brake cable end length “a”
     Out of specification → Adjust.

	**Parking brake cable end length 47.0–51.0 mm (1.85–2.01 in)**

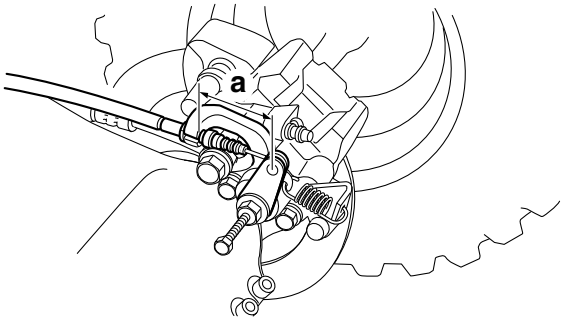

2. Adjust:
   - Parking brake cable end length

▼▼▼▼▼▼▼▼▼▼▼▼▼▼▼▼▼▼▼▼▼▼▼▼▼▼▼▼▼▼▼▼▼▼

a. Slide back the rubber cover “1”.
b. Loosen the locknut “2”.
c. Turn the adjusting nut “3” in direction “a” or “b” until the specified brake cable end length is obtained.

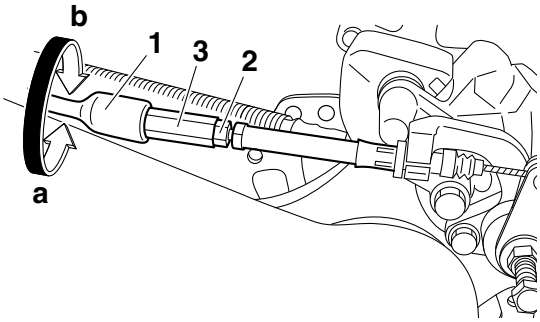

d. Tighten the locknut.
e. Slide the rubber cover to its original position.

EWA1PE1005

WARNING

After this adjustment is performed, lift the rear wheels off the ground by placing a block under the engine, and spin the rear wheels to ensure there is no brake drag. If any brake drag is noticed perform the above steps again.

▲▲▲▲▲▲▲▲▲▲▲▲▲▲▲▲▲▲▲▲▲▲▲▲▲▲▲▲▲▲▲▲▲▲

EAS21330
ADJUSTING THE REAR BRAKE LIGHT SWITCH

TIP

The rear brake light switch is operated by movement of the brake pedal. The rear brake light switch is properly adjusted when the brake light comes on just before the braking effect starts.

1. Check:
   - Rear brake light operation timing
     Incorrect → Adjust.
2. Adjust:
   - Rear brake light operation timing

▼▼▼▼▼▼▼▼▼▼▼▼▼▼▼▼▼▼▼▼▼▼▼▼▼▼▼▼▼▼▼▼▼▼

a. Hold the main body "1" of the rear brake light switch so that it does not rotate and turn the adjusting nut "2" in direction "a" or "b" until the rear brake light comes on at the proper time.

Direction "a"
Brake light comes on sooner.
Direction "b"
Brake light comes on later.

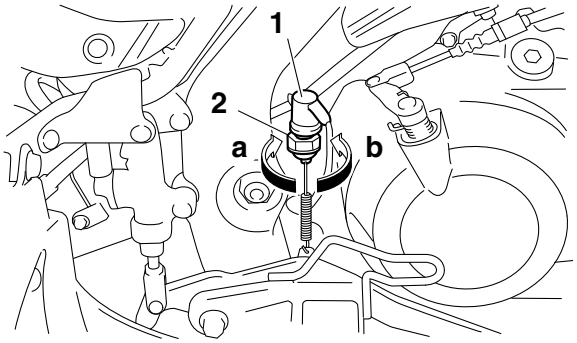

▲▲▲▲▲▲▲▲▲▲▲▲▲▲▲▲▲▲▲▲▲▲▲▲▲▲▲▲▲▲▲▲▲▲

EAS21360
BLEEDING THE HYDRAULIC BRAKE SYSTEM

EWA13100

WARNING

Bleed the hydraulic brake system whenever:
- **the system is disassembled.**
- **a brake hose is loosened, disconnected or replaced.**
- **the brake fluid level is very low.**
- **brake operation is faulty.**

TIP

- Be careful not to spill any brake fluid or allow the brake fluid reservoir to overflow.
- When bleeding the hydraulic brake system, make sure there is always enough brake fluid before applying the brake. Ignoring this precaution could allow air to enter the hydraulic brake system, considerably lengthening the bleeding procedure.
- If bleeding is difficult, it may be necessary to let the brake fluid settle for a few hours. Repeat the bleeding procedure when the tiny bubbles in the hose have disappeared.

1. Bleed:
   - Hydraulic brake system

▼▼▼▼▼▼▼▼▼▼▼▼▼▼▼▼▼▼▼▼▼▼▼▼▼▼▼▼▼▼▼▼▼▼

a. Fill the brake fluid reservoir to the proper level with the specified brake fluid.
b. Install the brake fluid reservoir diaphragm.
c. Connect a clear plastic hose "1" tightly to the bleed screw "2".

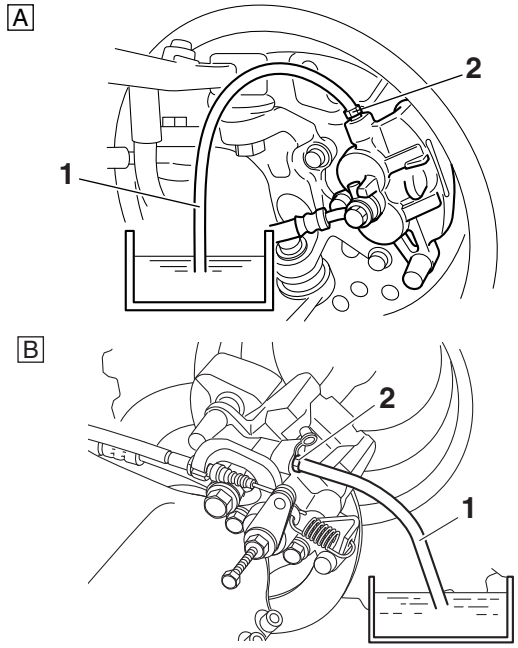

A. Front
B. Rear

d. Place the other end of the hose into a container.
e. Slowly apply the brake several times.
f. Fully pull the brake lever or fully press down the brake pedal and hold it in position.
g. Loosen the bleed screw.

TIP

Loosening the bleed screw will release the pressure and cause the brake lever to contact the throttle grip or the brake pedal to fully extend.

h. Tighten the bleed screw and then release the brake lever or brake pedal.
i. Repeat steps (e) to (h) until all of the air bubbles have disappeared from the brake fluid in the plastic hose.

j. Tighten the bleed screw to specification.

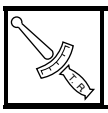	**Bleed screw** **6 Nm (0.6 m·kg, 4.3 ft·lb)**

k. Fill the brake fluid reservoir to the proper level with the specified brake fluid.
Refer to “CHECKING THE BRAKE FLUID LEVEL” on page 3-19.

EWA13110

WARNING

After bleeding the hydraulic brake system, check the brake operation.

▲▲▲▲▲▲▲▲▲▲▲▲▲▲▲▲▲▲▲▲▲▲▲▲▲▲▲▲▲▲▲▲

EAS21370

ADJUSTING THE SHIFT PEDAL

1. Measure:
   - Shift pedal height “a”
     Out of specification → Adjust.

	**Shift pedal height** **48 mm (1.89 in)**

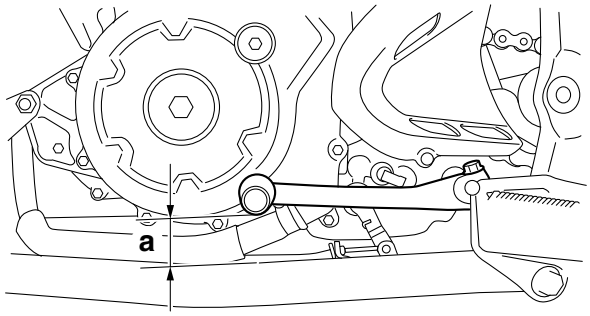

2. Adjust:
   - Shift pedal height

▼▼▼▼▼▼▼▼▼▼▼▼▼▼▼▼▼▼▼▼▼▼▼▼▼▼▼▼▼▼▼▼

a. Loosen the bolt “1”.
b. Remove the shift pedal “2”.
c. Install the shift pedal at the correct height.

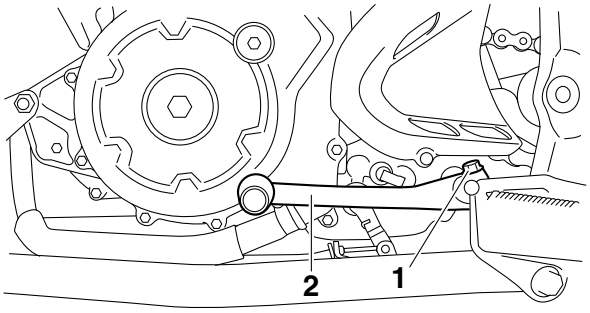

d. Tighten the bolt to specification.

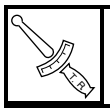	**Shift pedal bolt** **16 Nm (1.6 m·kg, 11 ft·lb)**

▲▲▲▲▲▲▲▲▲▲▲▲▲▲▲▲▲▲▲▲▲▲▲▲▲▲▲▲▲▲▲▲

EAS29240

ADJUSTING THE REVERSE CONTROL CABLE

1. Check:
   - Reverse knob free play “a”
     Out of specification → Adjust.

	**Reverse knob free play** **2.0–4.0 mm (0.08–0.16 in)**

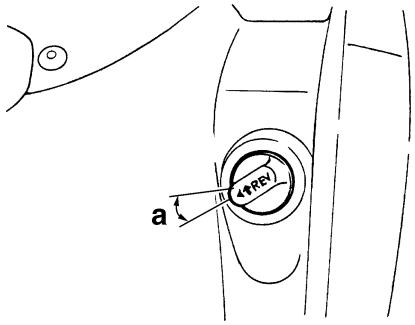

2. Adjust:
   - Reverse knob free play

▼▼▼▼▼▼▼▼▼▼▼▼▼▼▼▼▼▼▼▼▼▼▼▼▼▼▼▼▼▼▼▼

a. Slide back the boots “1” and “2”.
b. Loosen the locknut “3”.
c. Turn the adjusting nut “4” until the reverse control cable “5” is taut or the length “a” is 33 mm (1.30 in).

TIP

Be sure to hold the reverse shift lever “6” when making this adjustment so that it does not move.

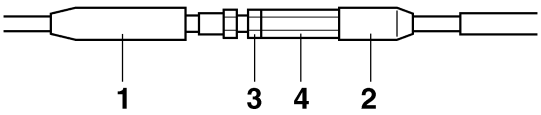

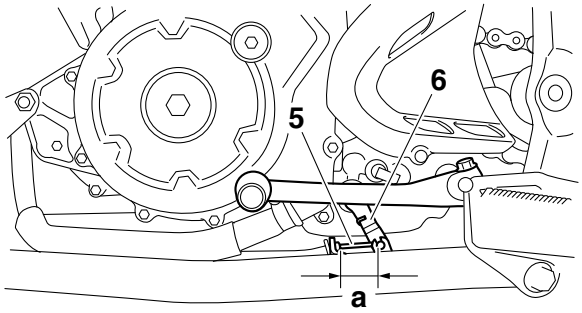

d. Tighten the locknut.
e. Slide the boots to their original positions.

▲▲▲▲▲▲▲▲▲▲▲▲▲▲▲▲▲▲▲▲▲▲▲▲▲▲▲▲▲▲▲▲

EAS21390

ADJUSTING THE DRIVE CHAIN SLACK

TIP

Measure the drive chain slack halfway between the drive axle and the rear axle.

ECA13550

NOTICE

A drive chain that is too tight will overload the engine and other vital parts, and one that is too loose can skip and damage the swingarm or cause an accident. Therefore, keep the drive chain slack within the specified limits.

1. Check:
   - Drive chain slack “a”
     Out of specification → Adjust.

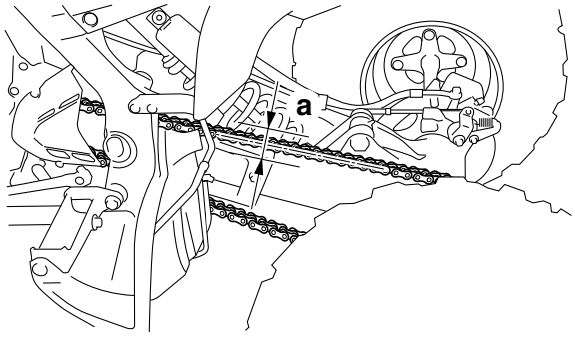

	Drive chain slack **25.0–35.0 mm (0.98–1.38 in)**

2. Adjust:
   - Drive chain slack

▼▼▼▼▼▼▼▼▼▼▼▼▼▼▼▼▼▼▼▼▼▼▼▼▼▼▼▼▼▼▼▼

TIP

The drive chain slack is adjusted by the rotation of the rear axle hub.

a. Loosen the rear axle pinch bolts “1”.

TIP

Loosen the rear axle pinch bolts in the proper sequence as shown.

b. Insert an appropriate shaft “2” in the hole “4” of rear axle hub “3” so that the sprocket bracket “5” does not move.

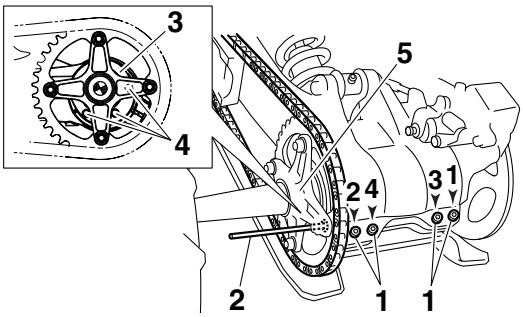

c. Shift the transmission into the neutral position.
d. To loosen the drive chain, push the vehicle forward, and to tighten the drive chain, pull the vehicle backward.

ECA1S3L001

NOTICE

Excessive chain slack will overload the engine and other vital parts; keep the slack within the specified limits.

e. If the chain slack cannot be adjusted, replace the sprockets and drive chain as a set.
f. Tighten the rear axle pinch bolts “1”.

	Rear axle pinch bolt **21 Nm (2.1 m·kg, 15 ft·lb)**

TIP

- Tighten the rear axle pinch bolts “1” in the proper sequence as shown.
- The chain should be cleaned and lubricated after every use of the vehicle.

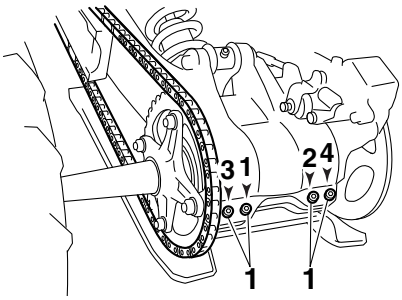

▲▲▲▲▲▲▲▲▲▲▲▲▲▲▲▲▲▲▲▲▲▲▲▲▲▲▲▲▲▲▲▲

EAS29280

CHECKING THE STEERING SYSTEM

1. Place the vehicle on a level surface.
2. Check:
   - Steering assembly bushings
     Move the handlebar up and down, and back and forth.
     Excessive play → Replace the steering stem bushings.

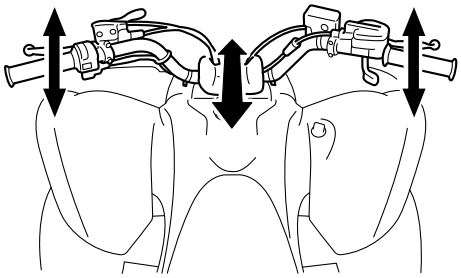

3. Check:
   - Tie-rod ends
     Excessive free play → Replace the tie-rod end.

▼▼▼▼▼▼▼▼▼▼▼▼▼▼▼▼▼▼▼▼▼▼▼▼▼▼▼▼▼▼▼▼▼▼

a. Turn the handlebar left until it stops.
b. Move the handlebar slightly to the right and left.
c. Check for play in the tie-rod ends.
d. Turn the handlebar right until it stops.
e. Move the handlebar slightly to the left and right.
f. Check for play in the tie-rod ends “1”.

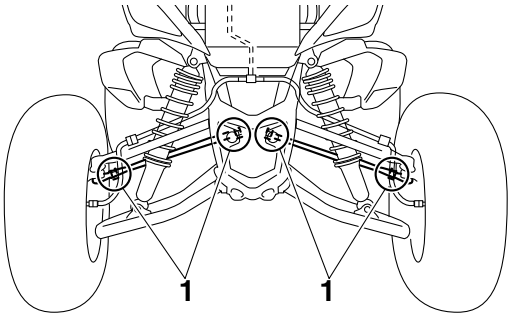

▲▲▲▲▲▲▲▲▲▲▲▲▲▲▲▲▲▲▲▲▲▲▲▲▲▲▲▲▲▲▲▲▲▲

4. Raise the front end of the vehicle so that there is no weight on the front wheels.
5. Check:
   - Ball joints and wheel bearings
     Move the wheels laterally back and forth.
     Excessive free play → Replace the front arms (upper and lower) and/or wheel bearings.

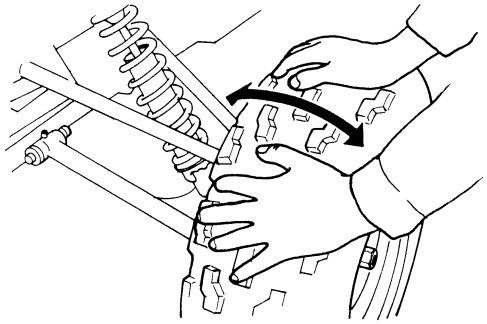

EAS29290

ADJUSTING THE TOE-IN

1. Place the vehicle on a level surface.
2. Measure:
   - Toe-in
     Out of specification → Adjust.

Toe-in (with tires touching the ground)
2.0–12.0 mm (0.08–0.47 in)

▼▼▼▼▼▼▼▼▼▼▼▼▼▼▼▼▼▼▼▼▼▼▼▼▼▼▼▼▼▼▼▼▼▼

TIP

Before measuring the toe-in, make sure that the tire pressure is correct.

a. Mark both front tire tread centers.
b. Face the handlebar straight ahead.
c. Measure the width “A” between the marks.
d. Rotate the front tires 180° until the marks are exactly opposite one another.
e. Measure the width “B” between the marks.
f. Calculate the toe-in using the formula given below.

Toe-in = “B” – “A”

g. If the toe-in is incorrect, adjust it.

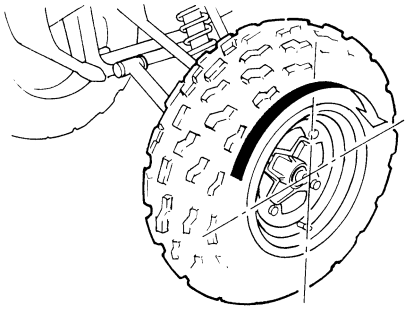

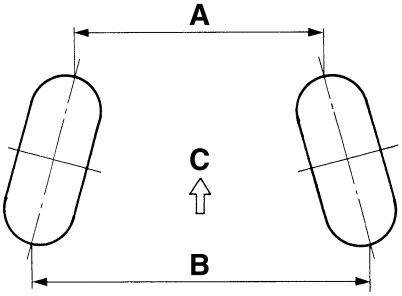

C. Forward

▲▲▲▲▲▲▲▲▲▲▲▲▲▲▲▲▲▲▲▲▲▲▲▲▲▲▲▲▲▲▲▲▲▲

3. Adjust:
   - Toe-in

EWA14910

WARNING

- **Be sure that both tie-rods are turned the same amount. If not, the vehicle will drift right or left even though the handlebar is positioned straight. This may lead to mishandling and an accident.**
- **After setting the toe-in to specification, run the vehicle slowly for some distance with both hands lightly holding the handlebar and check that the handlebar responds correctly. If not, turn either the right or left tie-rod within the toe-in specification.**

▼▼▼▼▼▼▼▼▼▼▼▼▼▼▼▼▼▼▼▼▼▼▼▼▼▼▼▼▼▼▼▼▼▼

a. Mark both tie-rod ends.
   This reference point will be needed during adjustment.
b. Loosen the locknuts (tie-rod end) “1” of both tie-rods.
c. The same number of turns should be given to both the right and left tie-rods “2” until the specified toe-in is obtained. This is to keep the length of the tie-rods the same.

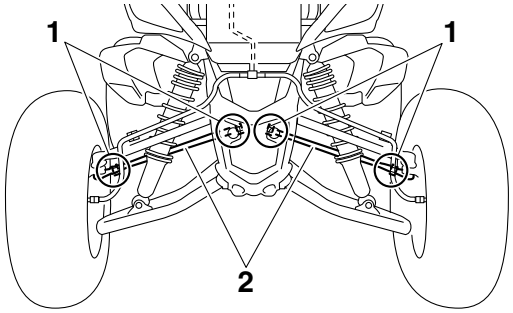

d. Tighten the rod end locknuts of both tie-rods.

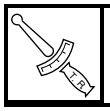	**Locknut (tie-rod end)** **18 Nm (1.8 m·kg, 13 ft·lb)**

TIP

Adjust the tie-rod ends so that “A” and “B” are equal.

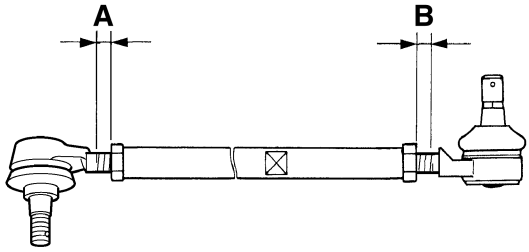

▲▲▲▲▲▲▲▲▲▲▲▲▲▲▲▲▲▲▲▲▲▲▲▲▲▲▲▲▲▲▲▲▲▲

EAS29300

CHECKING THE FRONT SHOCK ABSORBER ASSEMBLIES

The following procedure applies to both of the front shock absorber assemblies.

1. Place the vehicle on a level place.
2. Check:
   - Damper rod
     Bends/damage → Replace the front shock absorber assembly.
     Refer to “FRONT ARMS AND FRONT SHOCK ABSORBER ASSEMBLIES” on page 4-50.
   - Oil leakage
     Excessive oil leakage → Replace the front shock absorber assembly.
     Refer to “FRONT ARMS AND FRONT SHOCK ABSORBER ASSEMBLIES” on page 4-50.
   - Spring
     Fatigue → Replace the front shock absorber assembly.

Refer to "FRONT ARMS AND FRONT SHOCK ABSORBER ASSEMBLIES" on page 4-50.

3. Check:
   - Operation
     Pump the front shock absorber assembly up and down several times.
     Unsmooth operation → Replace front shock absorber assembly.
     Refer to "FRONT ARMS AND FRONT SHOCK ABSORBER ASSEMBLIES" on page 4-50.

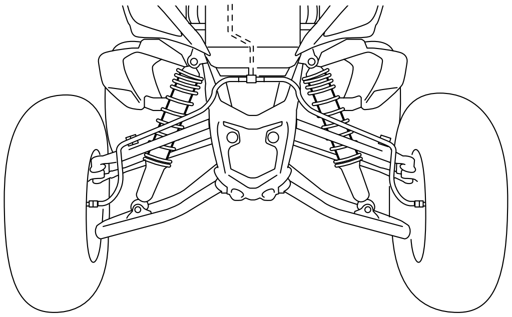

EAS1S3L007

ADJUSTING THE FRONT SHOCK ABSORBER ASSEMBLIES

The following procedure applies to both of the front shock absorber assemblies.

EWA1S3L002

⚠ WARNING

Always adjust the spring preload, rebound damping force and compression damping force of both front shock absorbers to the same setting. Uneven adjustment can result in poor handling and loss of stability.

1. Adjust:
   - Spring preload (YFM700RF)
     Turn the adjuster "1" in direction "a" or "b".

Ring nut wrench
90890-01268
Spanner wrench
YU-01268

Direction "a"
Spring preload is increased (suspension is harder).
Direction "b"
Spring preload is decreased (suspension is softer).

Spring preload adjusting positions
Minimum
1
Standard
2
Maximum
5

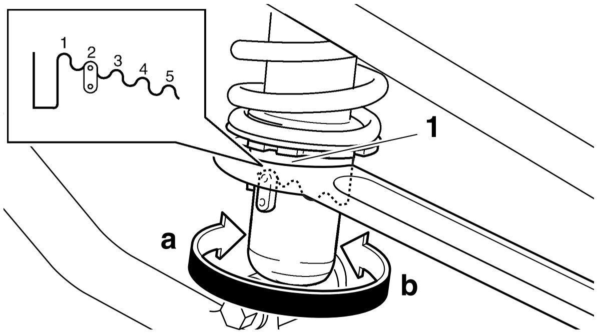

2. Adjust:
   - Spring preload (YFM700RSF)

▼▼▼▼▼▼▼▼▼▼▼▼▼▼▼▼▼▼▼▼▼▼▼▼▼▼▼▼▼▼▼▼▼▼▼▼▼

a. Elevate the front wheels by placing a suitable stand under the frame.
b. Loosen the locknut "1".
c. Turn the adjusting ring "2" in direction "a" or "b".

Direction "a"
Spring preload is increased (suspension is harder).
Direction "b"
Spring preload is decreased (suspension is softer).

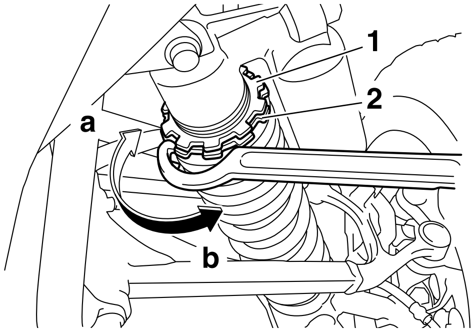

Spring preload adjusting positions "c"
Minimum
268.0 mm (10.55 in)
Standard
262.0 mm (10.31 in)
Maximum
253.0 mm (9.96 in)

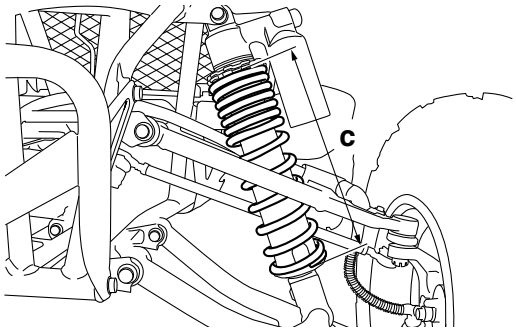

TIP

- Be sure to remove all dirt and mud from around the locknut and adjusting ring before adjustment.
- The length of the spring (installed) changes 1.5 mm (0.06 in) per turn of the adjusting ring.

ECA1S3L002

NOTICE

Never attempt to turn the adjusting ring beyond the maximum or minimum setting.

d. Tighten the locknut "1" with a steering nut wrench "3".

TIP

Set the torque wrench at a right angle to the steering nut wrench.

Steering nut wrench
90890-01443
Spanner wrench
YU-33975

Locknut
42 Nm (4.2 m·kg, 30 ft·lb)

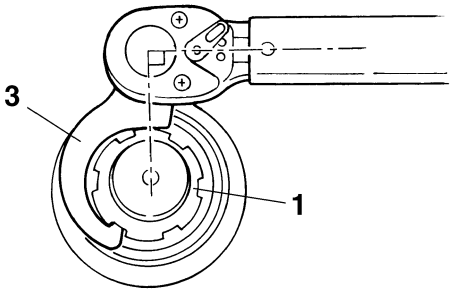

TIP

Always tighten the locknut against the adjusting ring, then torque it to specification.

3. Adjust:
   - Rebound damping force (YFM700RSF)

a. Turn the adjusting screw "1" in direction "a" or "b".

Direction "a"
Rebound damping force is increased (suspension is harder).
Direction "b"
Rebound damping force is decreased (suspension is softer).

Rebound damping adjusting positions
Minimum
30 click(s) out*
Standard
18 click(s) out*
Maximum
1 click(s) out*
*** With the adjusting knob fully turned in**

ECA1S3L003

NOTICE

Do not force the adjuster past the minimum or maximum extent of adjustment. The adjuster may be damaged.

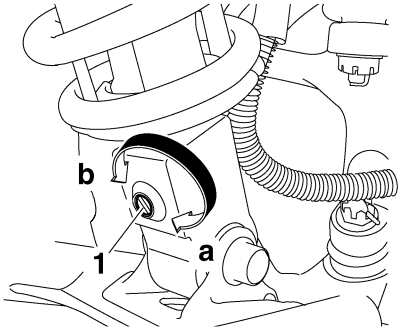

4. Adjust:
   - Compression damping force (fast compression damping) (YFM700RSF)

a. Turn the adjusting bolt "1" in direction "a" or "b".

Direction "a"
Compression damping force is increased (suspension is harder).
Direction "b"
Compression damping force is decreased (suspension is softer).

Compression damping setting (for fast compression damping)
Minimum
2 turn(s) out*
Standard
1.5 turn(s) out*
Maximum
Adjusting bolt fully turned in

*** With the adjusting bolt fully turned in**

ECA1S3L003

NOTICE

Do not force the adjuster past the minimum or maximum extent of adjustment. The adjuster may be damaged.

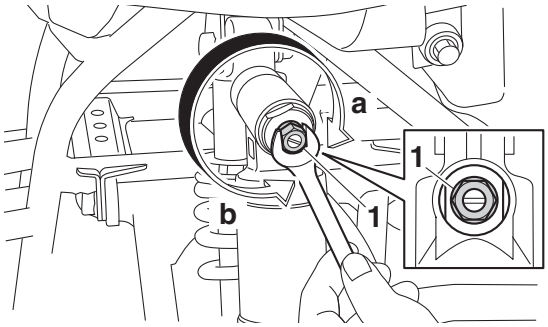

▲▲▲▲▲▲▲▲▲▲▲▲▲▲▲▲▲▲▲▲▲▲▲▲▲▲▲▲▲▲▲▲

5. Adjust:
   - Compression damping force (slow compression damping) (YFM700RSF)

▼▼▼▼▼▼▼▼▼▼▼▼▼▼▼▼▼▼▼▼▼▼▼▼▼▼▼▼▼▼▼▼

a. Turn the adjusting screw "1" in direction "a" or "b".

Direction "a"
Compression damping force is increased (suspension is harder).
Direction "b"
Compression damping force is decreased (suspension is softer).

Compression damping setting (for slow compression damping)
Minimum
18 click(s) out*
Standard
9 click(s) out*
Maximum
1 click(s) out*

*** With the adjusting screw fully turned in**

ECA1S3L003

NOTICE

Do not force the adjuster past the minimum or maximum extent of adjustment. The adjuster may be damaged.

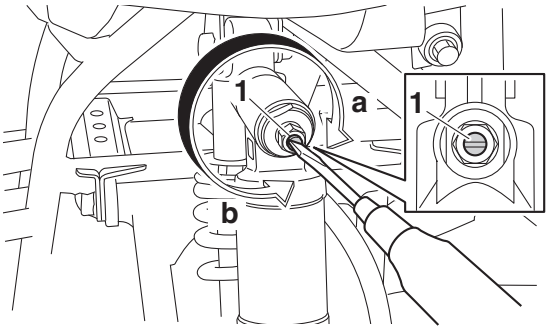

▲▲▲▲▲▲▲▲▲▲▲▲▲▲▲▲▲▲▲▲▲▲▲▲▲▲▲▲▲▲▲▲

EAS29320

CHECKING THE REAR SHOCK ABSORBER ASSEMBLY

1. Place the vehicle on a level place.
2. Check:
   - Damper rod
     Bends/damage → Replace the rear shock absorber assembly.
     Refer to "REAR SHOCK ABSORBER ASSEMBLY" on page 4-55.
   - Oil leakage
     Excessive oil leakage → Replace the rear shock absorber assembly.
     Refer to "REAR SHOCK ABSORBER ASSEMBLY" on page 4-55.
   - Gas cylinder (YFM700RSF)
     Damage/gas leaks → Replace the rear shock absorber assembly.
   - Spring
     Fatigue → Replace the rear shock absorber assembly.
     Refer to "REAR SHOCK ABSORBER ASSEMBLY" on page 4-55.
3. Check:
   - Operation
     Pump the rear shock absorber assembly up and down several times.
     Unsmooth operation → Replace rear shock absorber assembly.
     Refer to "REAR SHOCK ABSORBER ASSEMBLY" on page 4-55.

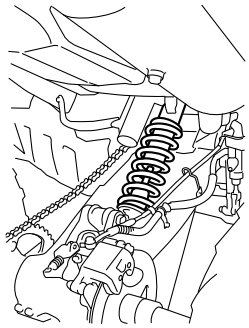

EAS1S3L008

ADJUSTING THE REAR SHOCK ABSORBER ASSEMBLY

1. Remove:
   - Seat
   - Air filter case
   Refer to “GENERAL CHASSIS” on page 4-1.
2. Adjust:
   - Spring preload

▼▼▼▼▼▼▼▼▼▼▼▼▼▼▼▼▼▼▼▼▼▼▼▼▼▼▼▼▼▼▼▼▼▼

a. Elevate the rear wheels by placing a suitable stand under the frame.
b. Loosen the locknut “2” with the ring nut wrench “1”.

Ring nut wrench
90890-01268
Spanner wrench
YU-01268

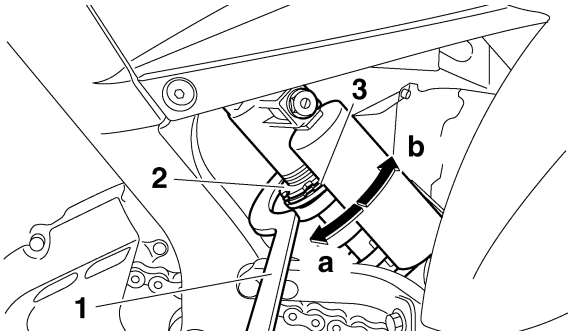

c. Turn the adjusting ring “3” in direction “a” or “b”.

Direction “a”
Spring preload is increased (suspension is harder).
Direction “b”
Spring preload is decreased (suspension is softer).

Spring preload adjusting length “c”
Minimum
238.5 mm (9.39 in)
Standard
228.5 mm (9.00 in)
Maximum
223.5 mm (8.80 in)

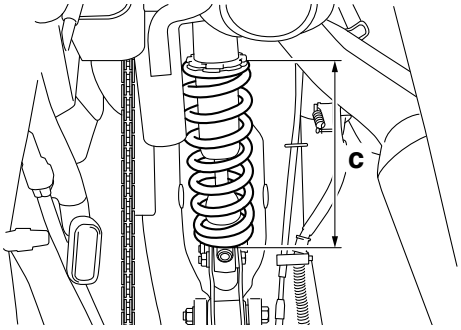

ECA1S3L002

NOTICE

Never attempt to turn the adjusting ring beyond the maximum or minimum setting.

TIP

- Be sure to remove all dirt and mud from around the locknut and adjusting ring before adjustment.
- The length of the spring (installed) changes 1.5 mm (0.06 in) per turn of the adjusting ring.

d. Tighten the locknut “2” with a steering nut wrench “4”.

TIP

- Set the torque wrench at a right angle to the steering nut wrench.
- Always tighten the locknut against the adjusting ring, then torque it to specification.

Steering nut wrench
90890-01443
Spanner wrench
YU-33975

Locknut
42 Nm (4.2 m·kg, 30 ft·lb)

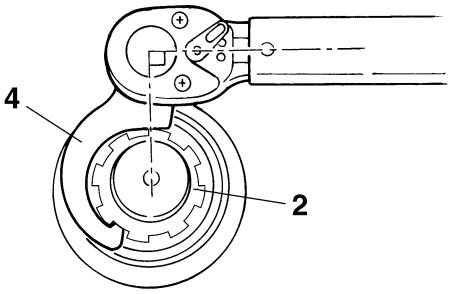

▲▲▲▲▲▲▲▲▲▲▲▲▲▲▲▲▲▲▲▲▲▲▲▲▲▲▲▲▲▲▲▲

3. Adjust:
   - Rebound damping force (YFM700RSF)

▼▼▼▼▼▼▼▼▼▼▼▼▼▼▼▼▼▼▼▼▼▼▼▼▼▼▼▼▼▼▼▼

a. Turn the adjusting screw “1” in direction “a” or “b”.

Direction “a”
Rebound damping force is increased (suspension is harder).
Direction “b”
Rebound damping force is decreased (suspension is softer).

Rebound damping adjusting positions
Minimum
30 click(s) out*
Standard
18 click(s) out*
Maximum
1 click(s) out*
*** With the adjusting konb fully turned in**

ECA1S3L003

NOTICE

Do not force the adjuster past the minimum or maximum extent of adjustment. The adjuster may be damaged.

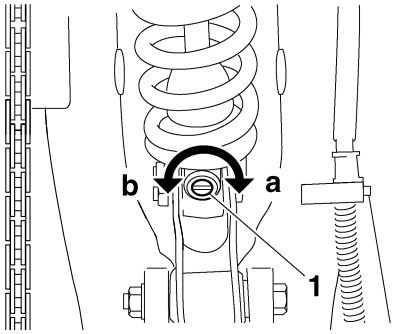

▲▲▲▲▲▲▲▲▲▲▲▲▲▲▲▲▲▲▲▲▲▲▲▲▲▲▲▲▲▲▲▲

4. Adjust:
   - Compression damping force (fast compression damping) (YFM700RSF)

▼▼▼▼▼▼▼▼▼▼▼▼▼▼▼▼▼▼▼▼▼▼▼▼▼▼▼▼▼▼▼▼

a. Turn the adjusting bolt “1” in direction “a” or “b”.

Direction “a”
Compression damping force is increased (suspension is harder).
Direction “b”
Compression damping force is decreased (suspension is softer).

Compression damping setting (for fast compression damping)
Minimum
2 turn(s) out*
Standard
1.25 turn(s) out*
Maximum
Adjust bolt fully turned in
*** With the adjusting bolt fully turned in**

ECA1S3L003

NOTICE

Do not force the adjuster past the minimum or maximum extent of adjustment. The adjuster may be damaged.

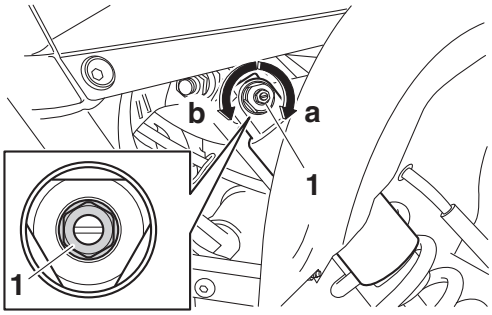

▲▲▲▲▲▲▲▲▲▲▲▲▲▲▲▲▲▲▲▲▲▲▲▲▲▲▲▲▲▲▲▲

5. Adjust:
   - Compression damping force (slow compression damping) (YFM700RSF)

▼▼▼▼▼▼▼▼▼▼▼▼▼▼▼▼▼▼▼▼▼▼▼▼▼▼▼▼▼▼▼▼

a. Turn the adjusting screw “1” in direction “a” or “b”.

Direction “a”
Compression damping force is increased (suspension is harder).
Direction “b”
Compression damping force is decreased (suspension is softer).

Compression damping setting (for slow compression damping)
Minimum
18 click(s) out*
Standard
10 click(s) out*
Maximum
1 click(s) out*

*** With the adjusting screw fully turned in**

ECA1S3L003

NOTICE

Do not force the adjuster past the minimum or maximum extent of adjustment. The adjuster may be damaged.

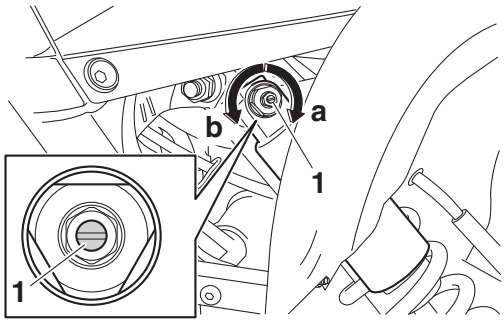

▲▲▲▲▲▲▲▲▲▲▲▲▲▲▲▲▲▲▲▲▲▲▲▲▲▲▲▲▲▲▲▲

6. Install:
   - Air filter case
   - Seat
   Refer to “GENERAL CHASSIS” on page 4-1.

EAS29340

CHECKING THE TIRES

EWA14940

WARNING

This model is equipped with low-pressure tires. It is important that they be inflated correctly and maintained at the proper pressures.

Tire characteristics

EWA14950

WARNING

Tire characteristics influence the handling of vehicles. The tires listed below have been approved by Yamaha Motor Co., Ltd. for this model. If other tire combinations are used, they can adversely affect your vehicle’s handling characteristics and are therefore not recommended.

Front tire
Type
Tubeless
Size
AT22 × 7–10
Manufacturer/model
MAXXIS/MS13 Bias
Rear tire
Type
Tubeless
Size
AT20 × 10–9
Manufacturer/model
MAXXIS/M976Y Bias

Tire pressure

EWA14960

WARNING

- **Tire pressure below the minimum specification could cause the tire to dislodge from the rim under severe riding conditions.**
- **Use no more than the following pressures when seating the tire beads.**

Front
250 kPa (2.5 kgf/cm²) (36 psi)
Rear
250 kPa (2.5 kgf/cm²) (36 psi)
Higher pressures and fast inflation may cause a tire to burst. Inflate the tires very slowly and carefully.

Tire air pressure (measured on cold tires)
Recommended
Front
27.5 kPa (0.275 kgf/cm², 4.0 psi)
Rear
27.5 kPa (0.275 kgf/cm², 4.0 psi)
Minimum
Front
24.5 kPa (0.245 kgf/cm², 3.6 psi)
Rear
24.5 kPa (0.245 kgf/cm², 3.6 psi)

Maximum loading limit

EWA14970

WARNING

Be extra careful of the vehicle balance and stability when towing a trailer.

Maximum loading limit
100.0 kg (220 lb)

*** Total weight of the cargo, trailer hitch vertical load, rider, and accessories.**

1. Measure:
   - Tire pressure
     Out of specification → Adjust.

TIP

- The low-pressure tire gauge "1" is included as standard equipment.
- In order to insure an accurate reading, make sure that the gauge is clean before use.

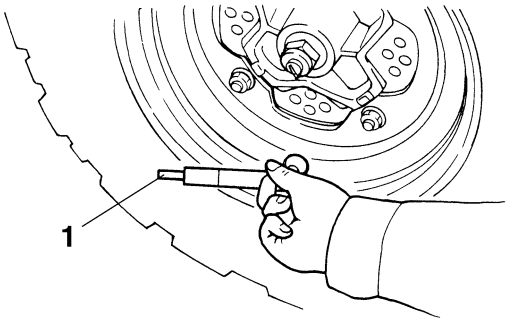

Recommended
Front
27.5 kPa (0.275 kgf/cm², 4.0 psi)
Rear
27.5 kPa (0.275 kgf/cm², 4.0 psi)
Minimum
Front
24.5 kPa (0.245 kgf/cm², 3.6 psi)
Rear
24.5 kPa (0.245 kgf/cm², 3.6 psi)

EWA14980

WARNING

Uneven or improper tire pressure may adversely affect the handling of this vehicle and may cause loss of control.
- **Maintain proper tire pressures.**
- **Set tire pressures when the tires are cold.**
- **Tire pressures must be equal in both front tires and equal in both rear tires.**

2. Check:
   - Tire surfaces
     Wear/damage → Replace.

Wear limit (front)
3 mm (0.12 in)
Wear limit (rear)
3 mm (0.12 in)

EWA1S3L015

WARNING

It is dangerous to ride with a worn-out tire. When the tire tread reaches the wear limit "a", replace the tire immediately.

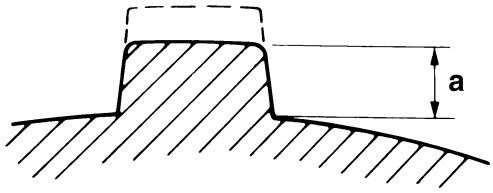

EAS29350

CHECKING THE WHEELS

The following procedure applies to all of the wheels.

1. Check:
   - Wheel "1"
     Damage/bends → Replace.

EWA14990

WARNING

- **Never attempt even small repairs to the wheel.**
- **Ride conservatively after installing a tire to allow it to seat itself properly on the rim.**

TIP

Always balance the wheel when a tire or wheel has been changed or replaced.

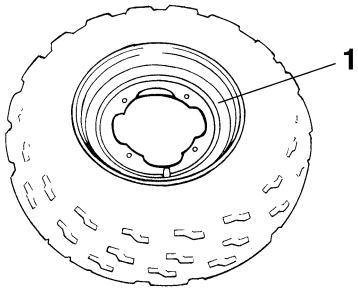

EAS21690

CHECKING AND LUBRICATING THE CABLES

The following procedure applies to all of the inner and outer cables.

EWA13270

WARNING

Damaged outer cable may cause the cable to corrode and interfere with its movement. Replace damaged outer cable and inner cables as soon as possible.

1. Check:
   - Outer cable
     Damage → Replace.
2. Check:
   - Cable operation
     Rough movement → Lubricate.

	Recommended lubricant **Engine oil or a suitable cable lubricant**

TIP

Hold the cable end upright and pour a few drops of lubricant into the cable sheath or use a suitable lubricating device.

3. Apply:
   - Lithium-soap-based grease
     (onto end of the cable)

EAS21700

LUBRICATING THE CLUTCH LEVER

Lubricate the pivoting point and metal-to-metal moving parts of the lever.

	Recommended lubricant **Lithium-soap-based grease**

EAS27S1002

LUBRICATING THE BRAKE LEVER

Lubricate the pivoting point and metal-to-metal moving parts of the lever.

	Recommended lubricant **Silicone grease**

EAS21710

LUBRICATING THE PEDAL

Lubricate the pivoting point and metal-to-metal moving parts of the pedal.

	Recommended lubricant **Lithium-soap-based grease**

EAS21740

LUBRICATING THE REAR SUSPENSION

Lubricate the pivoting point and metal-to-metal moving parts of the rear suspension.

	Recommended lubricant **Lithium-soap-based grease**

EAS21750

ELECTRICAL SYSTEM

EAS21760

CHECKING AND CHARGING THE BATTERY

Refer to “ELECTRICAL COMPONENTS” on page 8-59.

EAS21770

CHECKING THE FUSES

Refer to “ELECTRICAL COMPONENTS” on page 8-59.

EAS21790

REPLACING THE HEADLIGHT BULBS

The following procedure applies to both of the headlight bulbs.

1. Disconnect:
   - Headlight coupler “1”
2. Remove:
   - Headlight bulb holder cover “2”

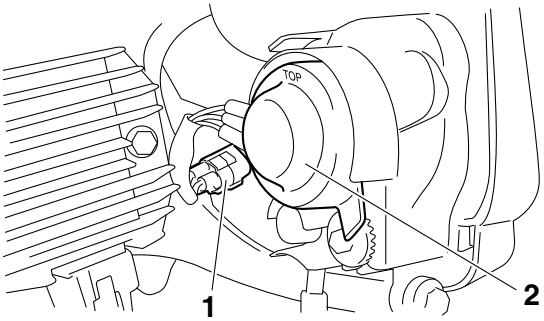

3. Remove:
   - Headlight bulb holder “1”
   - Headlight bulb

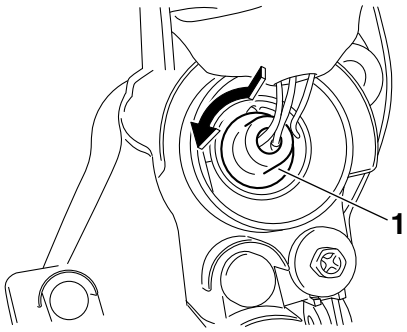

EWA13320

WARNING

Since the headlight bulb gets extremely hot, keep flammable products and your hands away from the bulb until it has cooled down.

4. Install:
   - Headlight bulb New
     Secure the new headlight bulb with the headlight bulb holder.

ECA13690

NOTICE

Avoid touching the glass part of the headlight bulb to keep it free from oil, otherwise the transparency of the glass, the life of the bulb and the luminous flux will be adversely affected. If the headlight bulb gets soiled, thoroughly clean it with a cloth moistened with alcohol or lacquer thinner.

5. Install:
   - Headlight bulb holder
   - Headlight bulb holder cover “2”

TIP

After installing the bulb holder cover, make sure that the “TOP” mark “a” is in the position shown.

6. Connect:
   - Headlight lead coupler “1”

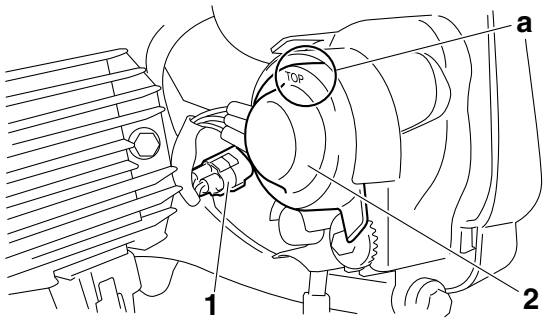

EAS21810

ADJUSTING THE HEADLIGHT BEAMS

The following procedure applies to both of the headlights.

1. Adjust:
   - Headlight beam (vertically)

▼▼▼▼▼▼▼▼▼▼▼▼▼▼▼▼▼▼▼▼▼▼▼▼▼▼▼▼▼▼▼▼▼

a. Turn the adjusting screw “1” in direction “a” or “b”.

Direction “a”
Headlight beam is raised.
Direction “b”
Headlight beam is lowered.

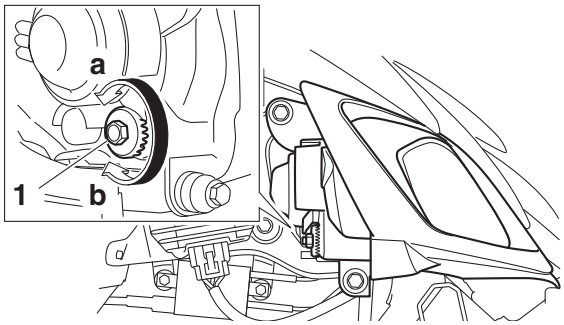
a
1
b

▲▲▲▲▲▲▲▲▲▲▲▲▲▲▲▲▲▲▲▲▲▲▲▲▲▲▲▲▲▲▲▲▲▲▲▲▲▲▲

CHASSIS

EAS21830

GENERAL CHASSIS

Removing the seat, front panel, foot protectors and engine skid plate

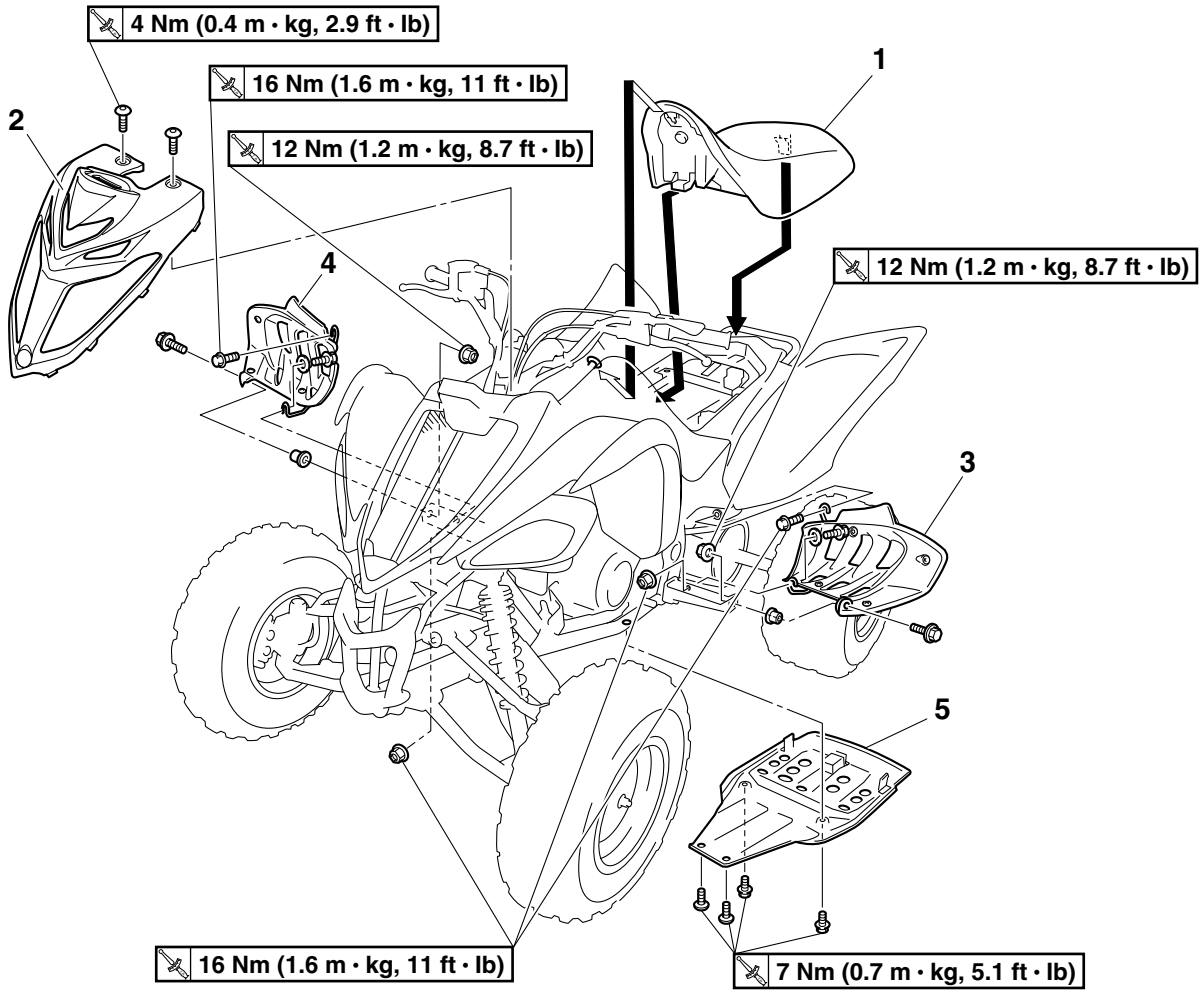

Order	Job/Parts to remove	Q'ty	Remarks
1	Seat	1	**TIP** Pull back the seat lock lever, than pull up on the rear of the seat.
2	Front panel	1	
3	Left foot protector	1	
4	Right foot protector	1	
5	Engine skid plate	1	
			For installation, reverse the removal procedure.

Removing the headlights and front fender

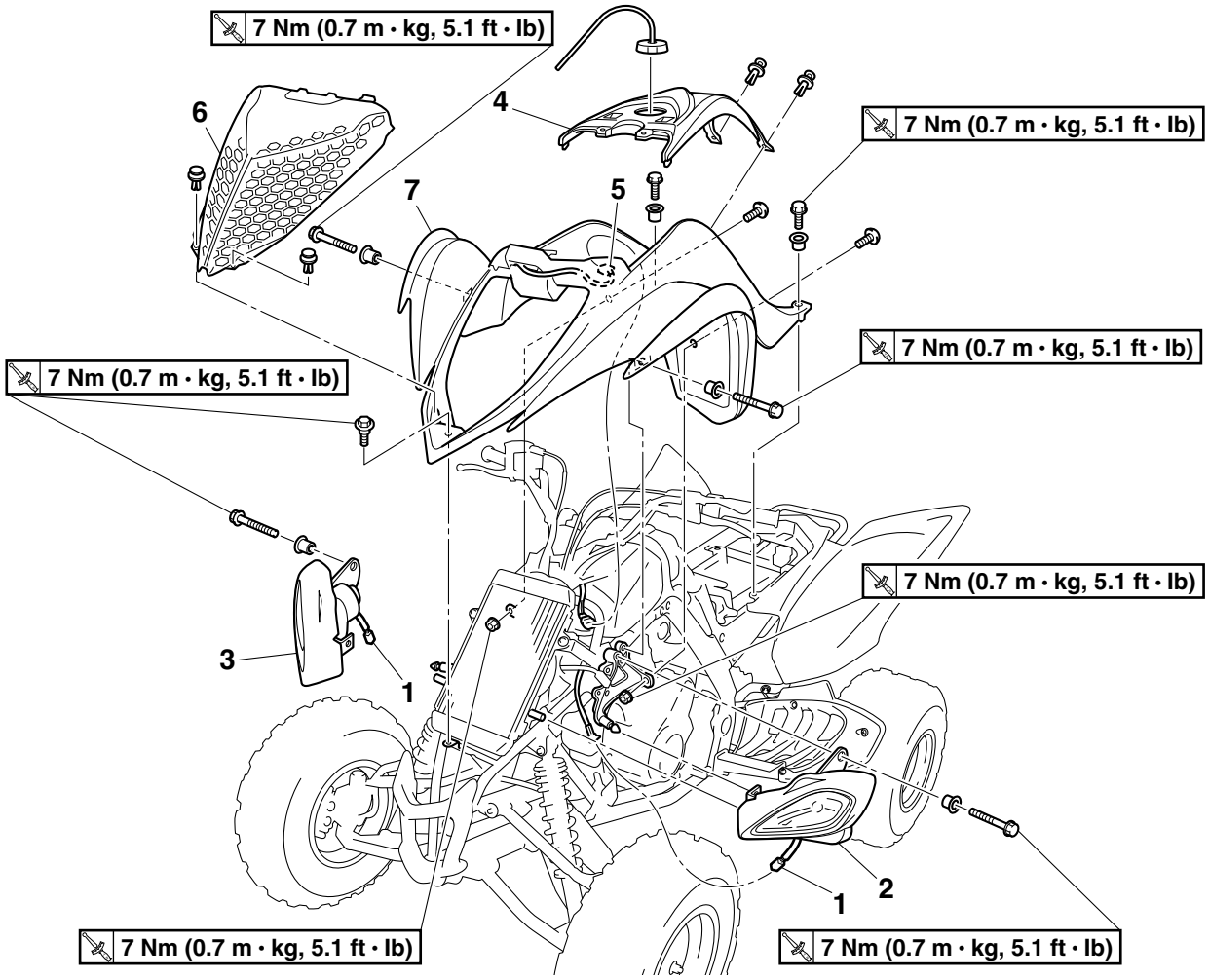

Order	Job/Parts to remove	Q'ty	Remarks
	Seat/front panel		Refer to "Removing the seat, front panel, foot protectors and engine skid plate".
1	Headlight coupler	2	Disconnect.
2	Left headlight	1	
3	Right headlight	1	
4	Fuel tank top panel	1	
5	Indicator light assembly coupler	1	Disconnect.
6	Radiator grill	1	
7	Front fender	1	
			For installation, reverse the removal procedure.

Removing the rear fender

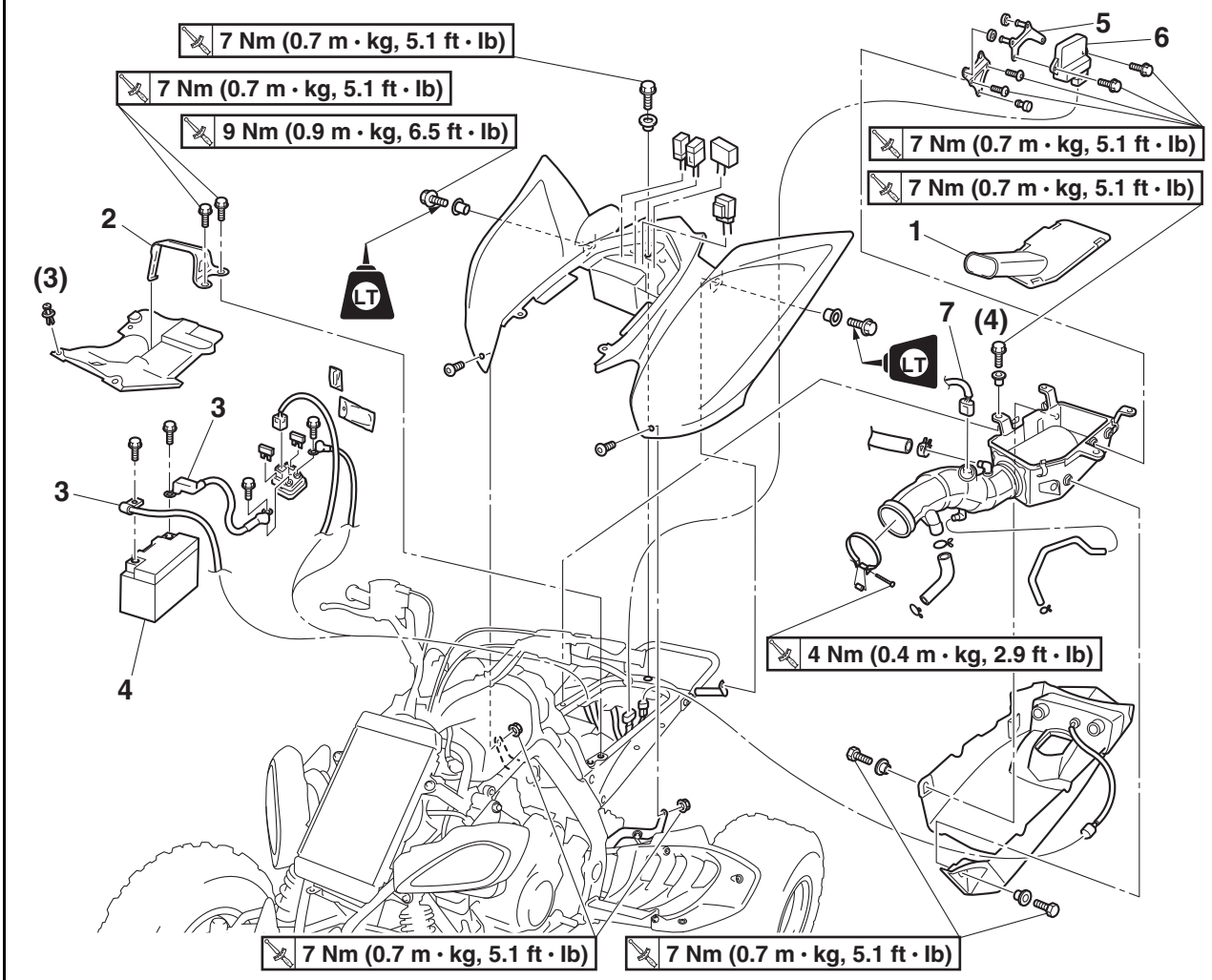

Order	Job/Parts to remove	Q'ty	Remarks
	Seat/front panel		Refer to "Removing the seat, front panel, foot protectors and engine skid plate".
	Fuel tank top panel/front fender		Refer to "Removing the headlights and front fender".
1	Air filter case cover	1	
2	Battery holding bracket	1	
3	Battery lead	2	Disconnect. ECA1S3L009 ***NOTICE*** **First disconnect the negative lead, then disconnect the positive lead.**
4	Battery	1	
5	ECU stay	1	
6	ECU (electronic control unit)	1	
7	Intake air temperature sensor coupler	1	Disconnect.

Removing the rear fender

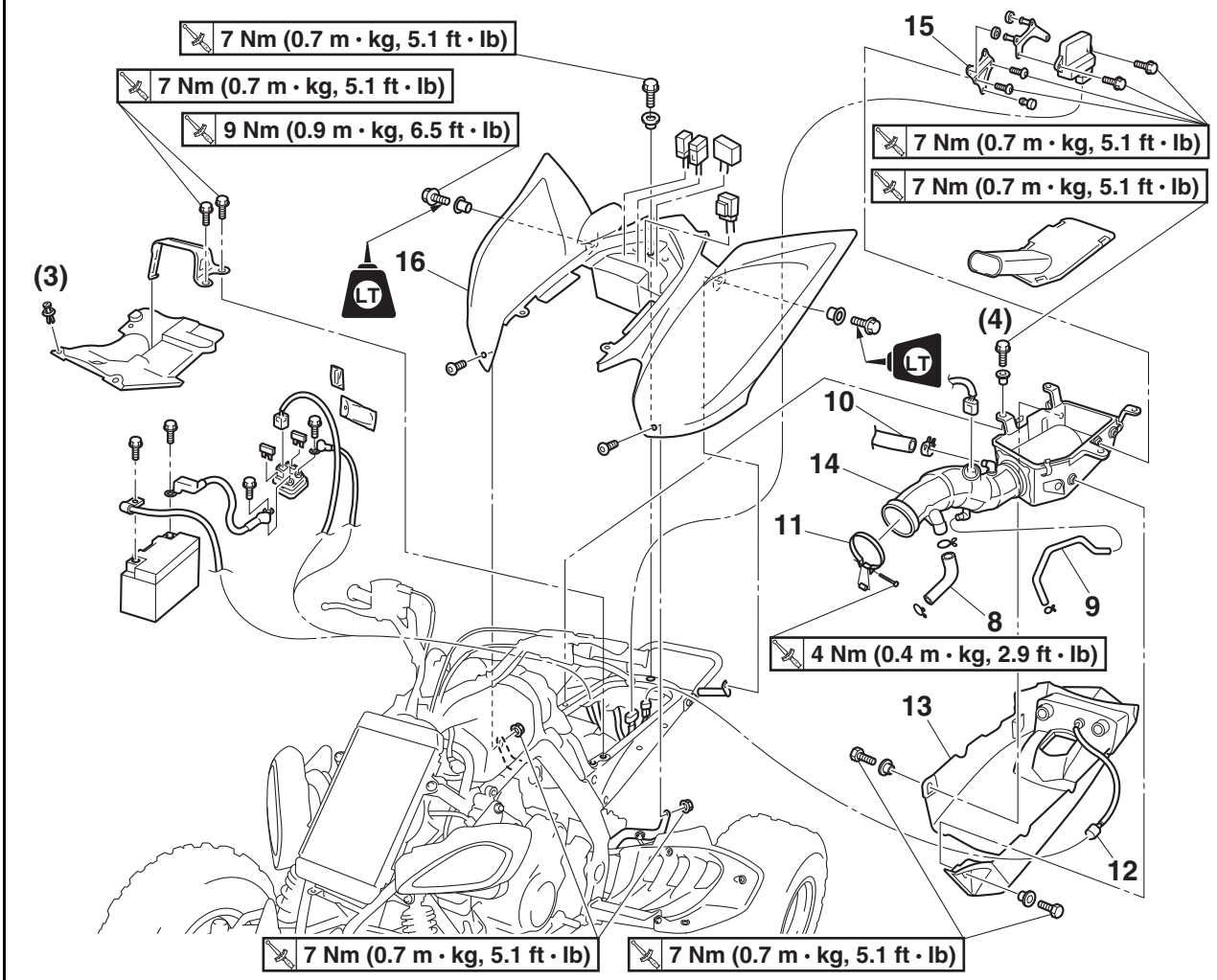

Order	Job/Parts to remove	Q'ty	Remarks
8	Idle air hose	1	
9	Crankcase breather hose	1	
10	Air induction system hose (air filter case joint to air cut-off valve)	1	Disconnect.
11	Clamp (throttle body joint)	1	Loosen.
12	Tail/brake light lead coupler	1	Disconnect.
13	Tail/brake light assembly	1	
14	Air filter case	1	
15	ECU bracket	1	
16	Rear fender	1	
			For installation, reverse the removal procedure.

EAS21870

FRONT WHEELS

Removing the front wheels and brake discs

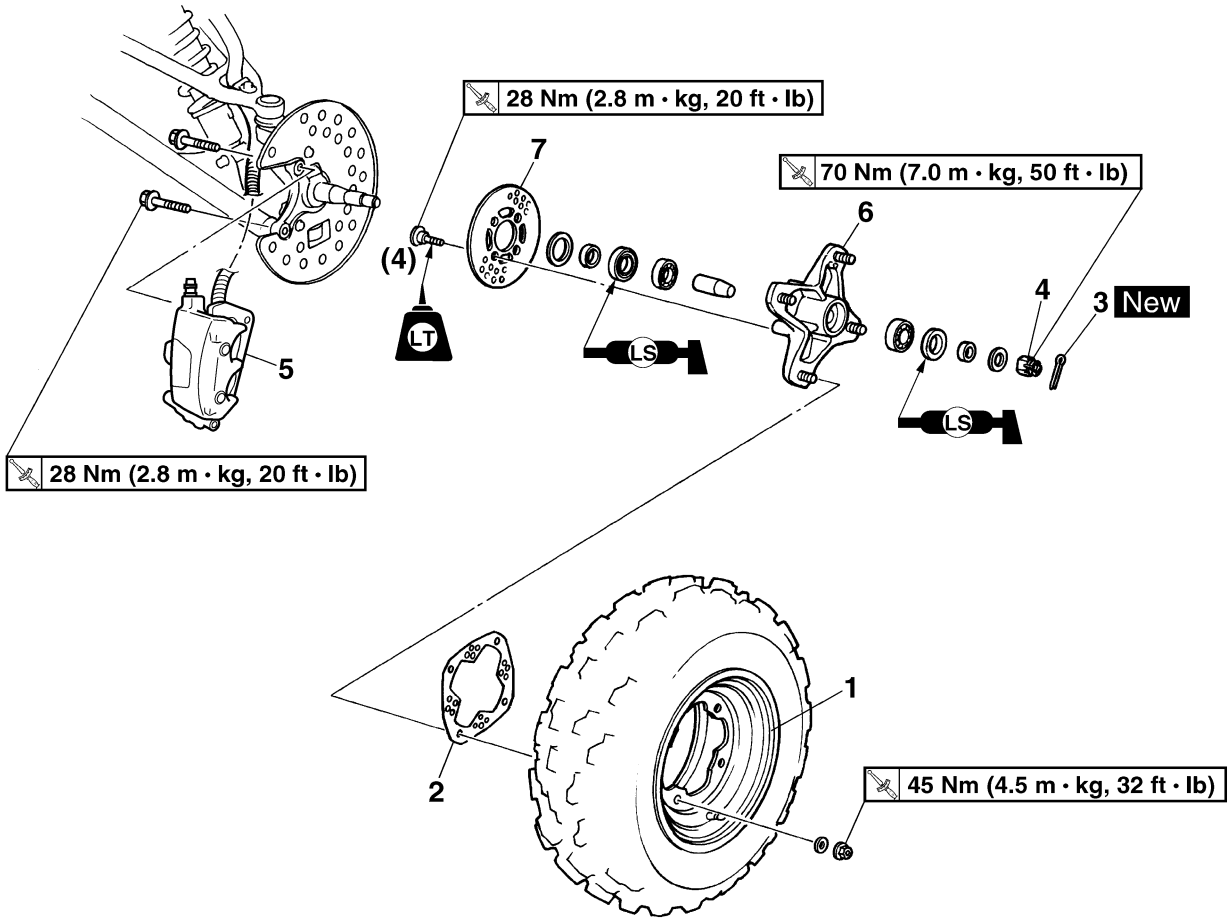

Order	Job/Parts to remove	Q'ty	Remarks
			The following procedure applies to both of the front wheels. Place the vehicle on a level surface.
1	Front wheel	1	
2	Brake disc guard (outer)	1	
3	Cotter pin	1	
4	Front wheel axle nut	1	
5	Front brake caliper assembly	1	**TIP** Do not squeeze the brake lever when the brake caliper is off of the brake discs as the brake pads will be forced shut.
6	Front wheel hub	1	
7	Front brake disc	1	
			For installation, reverse the removal procedure.

EAS21890
REMOVING THE FRONT WHEELS
1. Place the vehicle on a level surface.
2. Elevate:
   - Front wheels

TIP

Place the vehicle on a suitable stand so that the front wheels are elevated.

3. Remove:
   - Front brake calipers

TIP

Do not apply the brake lever when removing the brake calipers.

EAS29380
CHECKING THE FRONT WHEELS
The following procedure applies to both of the front wheels.
1. Check:
   - Tire
   - Wheel
     Refer to “CHECKING THE TIRES” on page 3-32 and “CHECKING THE WHEELS” on page 3-33.
2. Measure:
   - Radial wheel runout “1”
   - Lateral wheel runout “2”
     Over the specified limit → Replace the wheel or check the wheel bearing play “3”.

Radial wheel runout limit
2.0 mm (0.08 in)
Lateral wheel runout limit
2.0 mm (0.08 in)

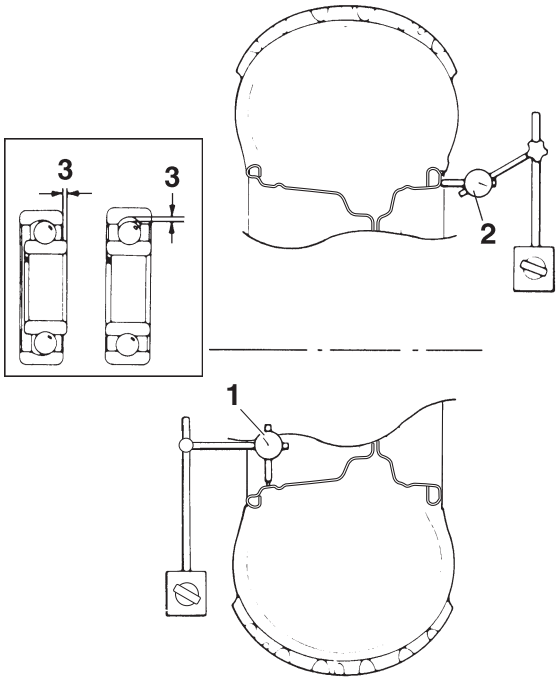

3. Check:
   - Wheel balance
     Out of balance → Adjust.

EWA15000

WARNING

After replacing the tire, ride conservatively to allow the tire to be properly seated in the rim. Failure to do so may cause an accident resulting in vehicle damage and possible injury.

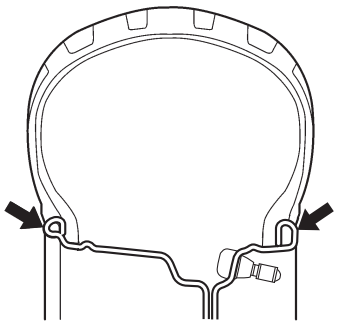

EAS29390
CHECKING THE FRONT WHEEL HUBS
The following procedure applies to both of the front wheel hubs.
1. Check:
   - Wheel hub “1”
     Cracks/damage → Replace.

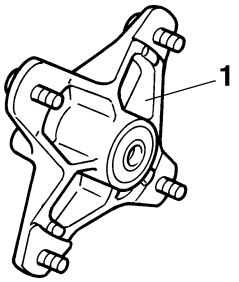

2. Check:
   - Wheel bearings
     Wheel hub play/wheel turns roughly → Replace.

▼▼▼▼▼▼▼▼▼▼▼▼▼▼▼▼▼▼▼▼▼▼▼▼▼▼▼▼▼▼▼▼▼▼▼▼

a. Clean wheel hub exterior.
b. Drive bearing out by pushing spacer aside and tapping around perimeter of bearing inner race. Use a soft metal drift punch and a hammer. The spacer "1" floats between the bearings. Remove both bearings as described.

EWA1S3L004

WARNING

Eye protection is recommended when using striking tools.

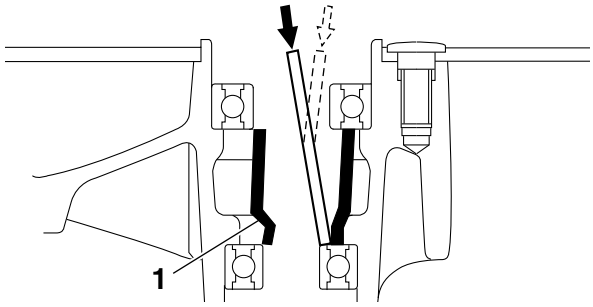

c. To install the wheel bearings, reverse the above sequence. Use a socket that matches outside diameter of bearing outer race to drive in bearing.

ECA1S3L010

NOTICE

Do not strike the center race or balls of the bearing. Contact should be made only with the outer race.

▲▲▲▲▲▲▲▲▲▲▲▲▲▲▲▲▲▲▲▲▲▲▲▲▲▲▲▲▲▲▲▲▲▲▲▲

EAS29400

INSTALLING THE FRONT WHEEL HUB BEARINGS

1. Install:
   - Bearings "1"

TIP

Face the oil seal side of the bearing inward.

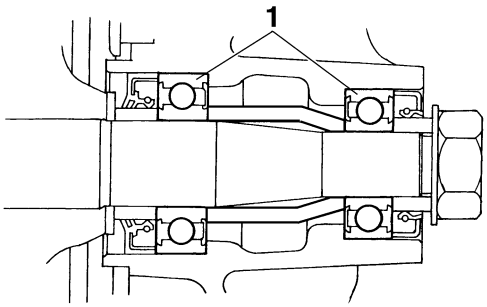

EAS1S3L013

INSTALLING THE FRONT BRAKE DISCS

1. Install:
   - Brake discs

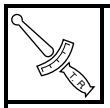

Brake disc bolt
28 Nm (2.8 m·kg, 20 ft·lb)
LOCTITE®

TIP

Install the brake disc so that the recessed portion of the bolt hole faces away from the hub.

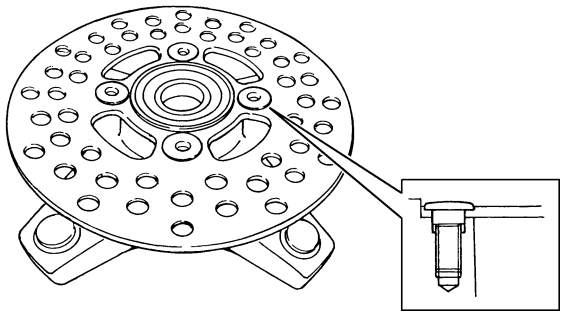

EAS29410

INSTALLING THE FRONT WHEEL HUBS

The following procedure applies to both of the front wheel hubs.

1. Install:
   - Axle nut "1"
   - Cotter pin "2" New

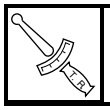

Axle nut
70 Nm (7.0 m·kg, 50 ft·lb)

TIP

If an axle nut slot is not aligned with the cotter pin hole on either side of the axle, further tighten the axle nut until a slot is aligned with the hole.

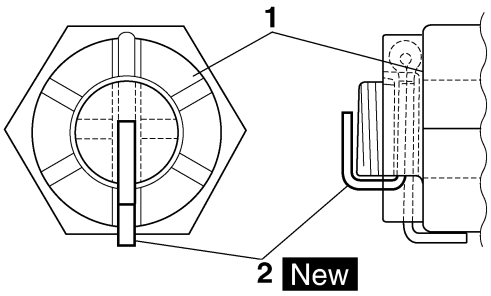

2. Check:
   - Brake disc
     Refer to “CHECKING THE FRONT BRAKE DISCS” on page 4-22.

EAS29420

INSTALLING THE FRONT WHEELS

The following procedure applies to both of the front wheels.

1. Install:
   - Brake disc guard (outer) “1”

TIP

Install the brake disc guard (outer) with the punched burrs “2” on the wheel hub side.

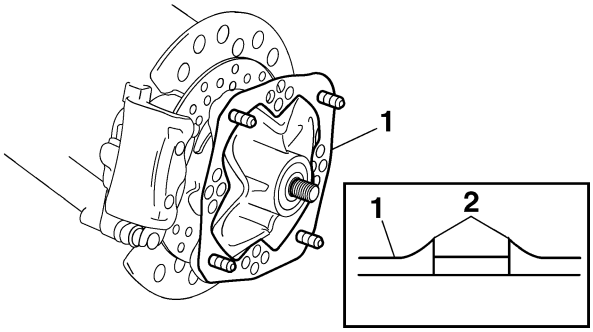

2. Install:
   - Wheel

TIP

The arrow mark “1” on the tire must point in the direction of rotation “A” of the wheel.

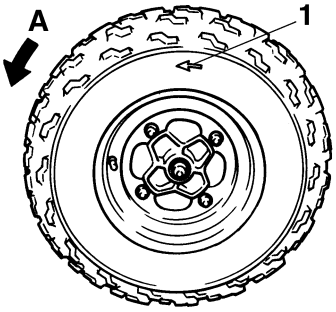

3. Tighten:
   - Wheel nut

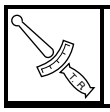	**Wheel nut** **45 Nm (4.5 m·kg, 32 ft·lb)**

EAS22020

REAR WHEELS

Removing the rear wheels

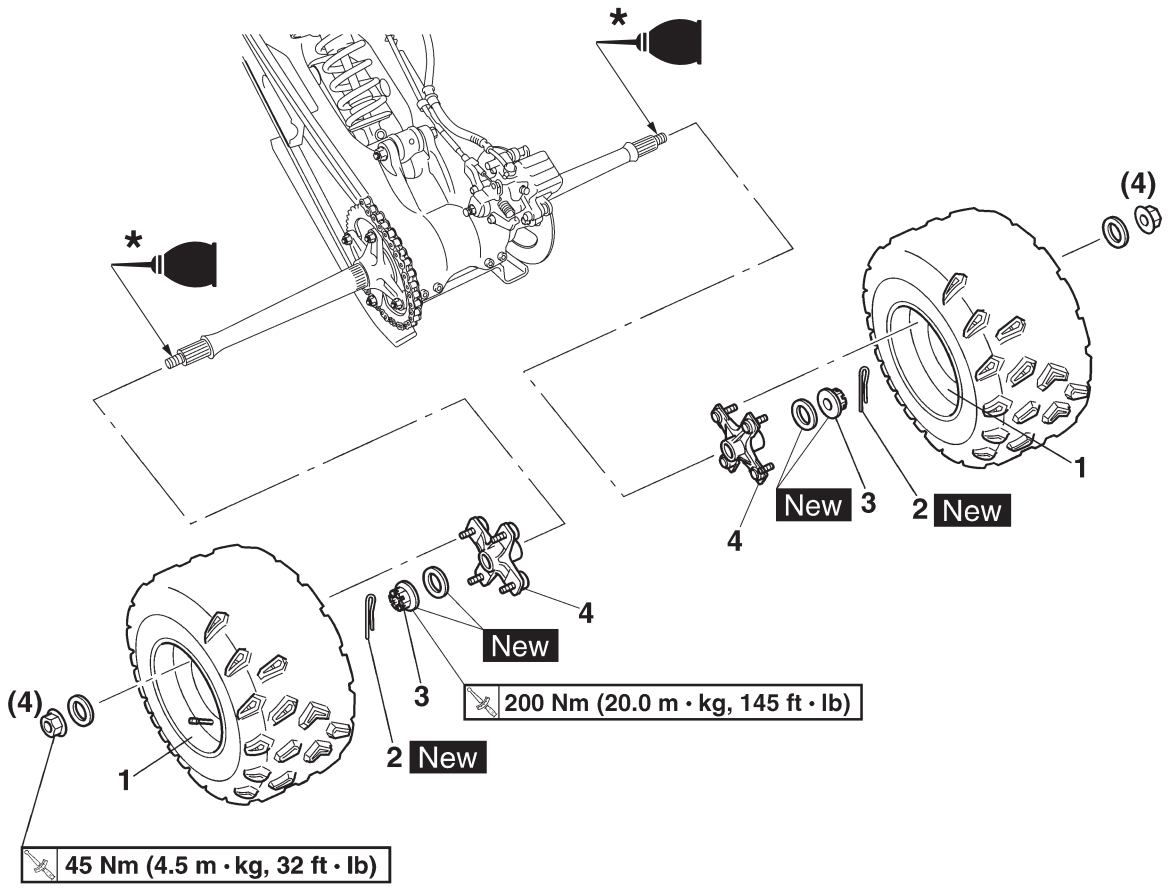

Order	Job/Parts to remove	Q'ty	Remarks
			The following procedure applies to both of the rear wheels. Place the vehicle on a level surface.
1	Rear wheel	2	
2	Cotter pin	2	
3	Rear wheel axle nut	2	
4	Rear wheel hub	2	
			For installation, reverse the removal procedure.

* Apply a rust preventive lubricant

EAS1S3L014
REMOVING THE REAR WHEELS
1. Place the vehicle on a level surface.
2. Elevate:
   - Rear wheels

TIP

Place the vehicle on a suitable stand so that the rear wheels are elevated.

EAS29430
CHECKING THE REAR WHEELS
The following procedure applies to both of the rear wheels.
1. Check:
   - Tire
   - Wheel
     Refer to “CHECKING THE TIRES” on page 3-32 and “CHECKING THE WHEELS” on page 3-33.
2. Measure:
   - Radial wheel runout
   - Lateral wheel runout
     Refer to “CHECKING THE FRONT WHEELS” on page 4-6.
     Over the specified limit → Replace.

	**Radial wheel runout limit** **2.0 mm (0.08 in)** **Lateral wheel runout limit** **2.0 mm (0.08 in)**

3. Check:
   - Wheel balance
     Refer to “CHECKING THE FRONT WHEELS” on page 4-6.
     Out of balance → Adjust.

EAS29440
CHECKING THE REAR WHEEL HUBS
The following procedure applies to both of the rear wheel hubs.
1. Check:
   - Wheel hub “1”
     Cracks/damage → Replace.
   - Splines (wheel hub) “2”
     Wear/damage → Replace.

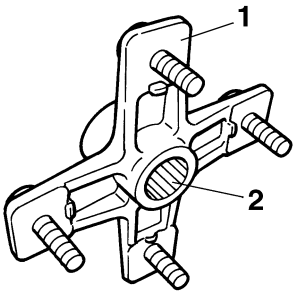

EAS29450
INSTALLING THE REAR WHEEL HUBS
The following procedure applies to both of the rear wheel hubs.
1. Install:
   - Rear axle washers “1” New
   - Rear axle nuts “2” New
   - Cotter pins “3” New

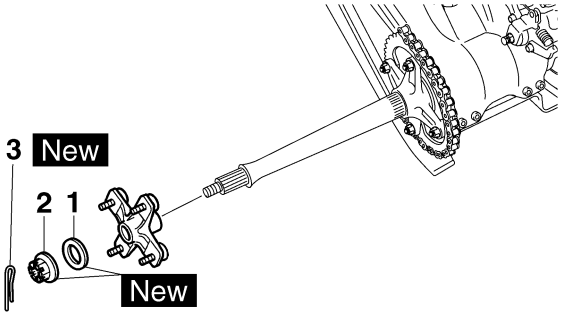

▼▼▼▼▼▼▼▼▼▼▼▼▼▼▼▼▼▼▼▼▼▼▼▼▼▼▼▼▼▼▼▼▼▼

a. Apply a rust preventive lubricant to the threads on both sides of the rear axle and to the wheel hub surfaces that contact the rear axle washers.
b. Tighten the rear axle nuts to specification.

	**Rear axle nut** **200 Nm (20.0 m·kg, 145 ft·lb)**

c. Loosen the rear axle nuts completely.
d. Retighten the rear axle nuts to specification.

	**Rear axle nut** **200 Nm (20.0 m·kg, 145 ft·lb)**

TIP

If an axle nut slot is not aligned with the cotter pin hole on either side of the axle, further tighten the axle nut until a slot is aligned with the hole.

▲▲▲▲▲▲▲▲▲▲▲▲▲▲▲▲▲▲▲▲▲▲▲▲▲▲▲▲▲▲▲▲▲▲

EAS29460
INSTALLING THE REAR WHEELS
The following procedure applies to both of the rear wheels.

1. Install:
   - Wheel

TIP

The arrow mark “1” on the tire must point in the direction of rotation “A” of the wheel.

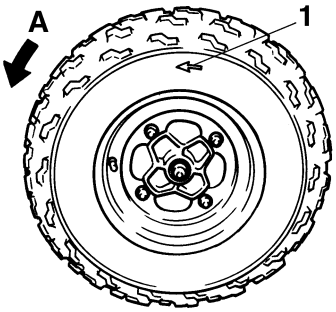

2. Tighten:
   - Wheel nut

	**Wheel nut** **45 Nm (4.5 m·kg, 32 ft·lb)**

EAS29470

REAR AXLE AND REAR AXLE HUB

Removing the rear axle and rear axle hub

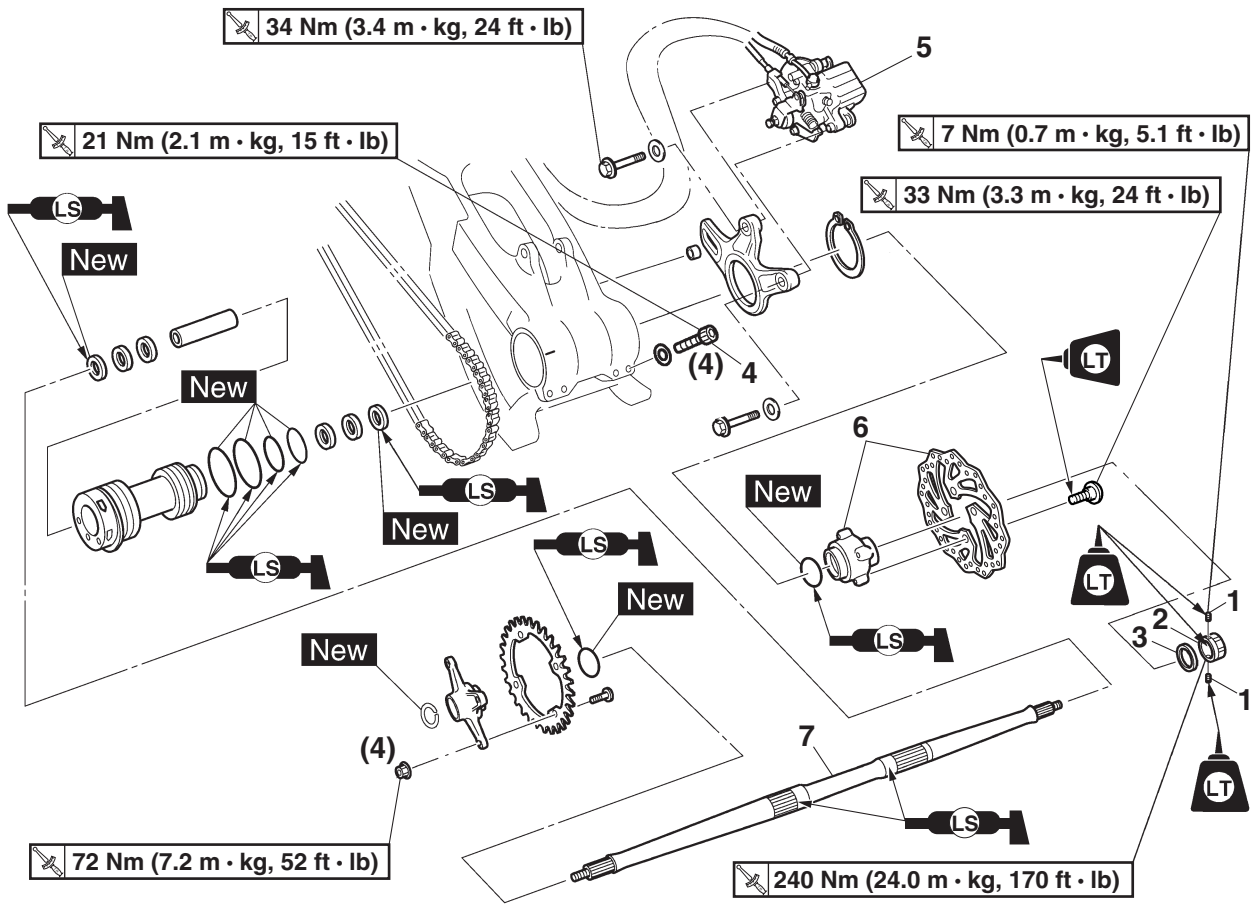

Order	Job/Parts to remove	Q'ty	Remarks
	Rear wheels/rear wheel hubs		Refer to "REAR WHEELS" on page 4-9.
1	Set bolt	2	
2	Rear axle ring nut	1	
3	Conical spring washer	1	
4	Rear axle pinch bolt	4	
5	Rear brake caliper	1	**TIP** Do not apply the brake pedal and do not use the parking brake when the brake caliper is off of the brake disc as the brake pads will be forced shut.
6	Brake disc/brake disc bracket	1/1	
7	Rear axle	1	

Removing the rear axle and rear axle hub

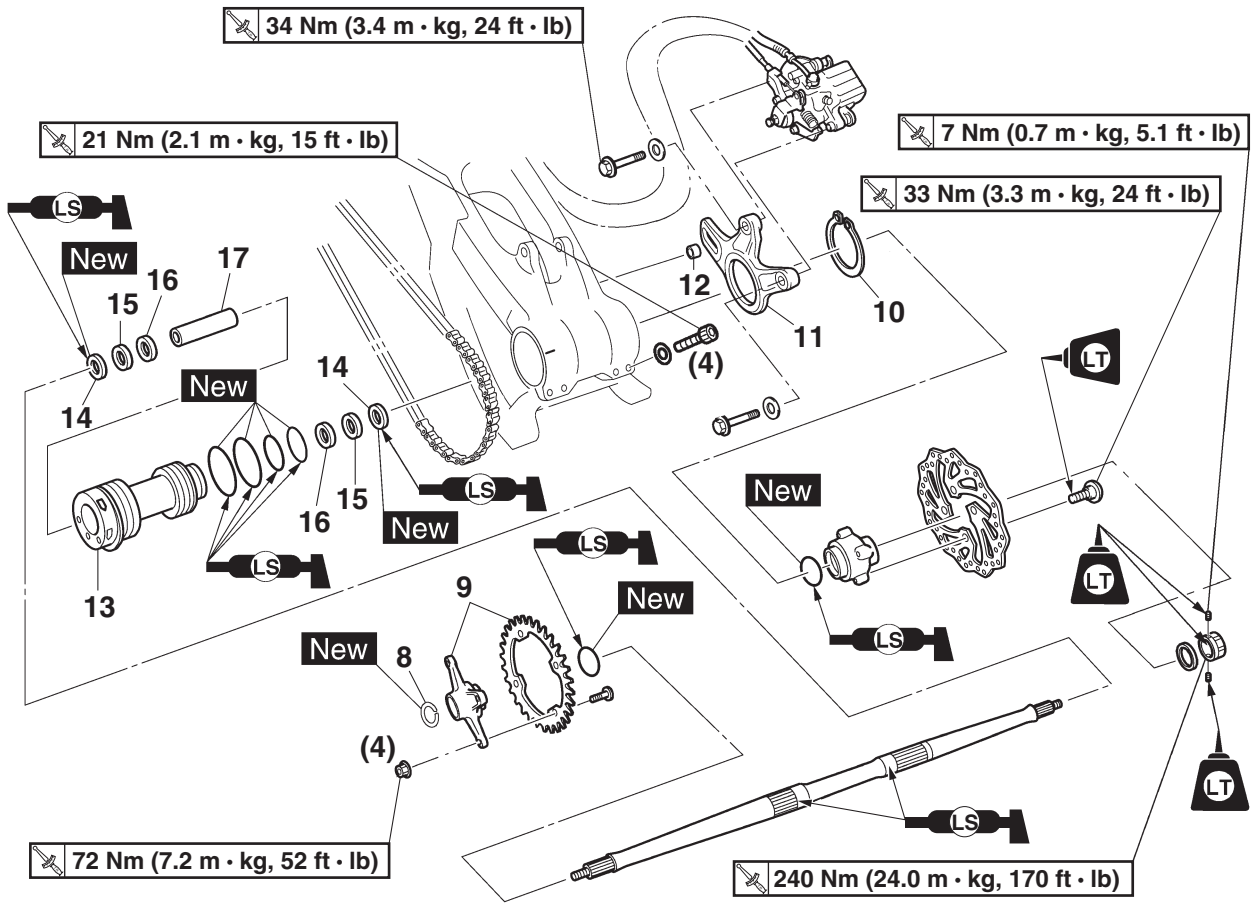

Order	Job/Parts to remove	Q'ty	Remarks
8	Circlip	1	
9	Driven sprocket/sprocket bracket	1/1	
10	Circlip	1	
11	Brake caliper bracket	1	
12	Spacer	1	
13	Rear axle hub	1	
14	Oil seal	2	
15	Bearing	2	
16	Bearing	2	
17	Spacer	1	
			For installation, reverse the removal procedure.

EAS29490

REMOVING THE REAR AXLE

1. Place the vehicle on a level surface.
2. Remove:
   - Rear axle ring nut set bolts “1”
3. Loosen:
   - Rear axle ring nut “2”

TIP

- Apply the brake pedal so that the rear axle does not turn when loosening the nut.
- Use the axle nut wrench “3”.

Axle nut wrench (46 mm)
90890-01498
Rear axle nut wrench 46 mm
YM-37134

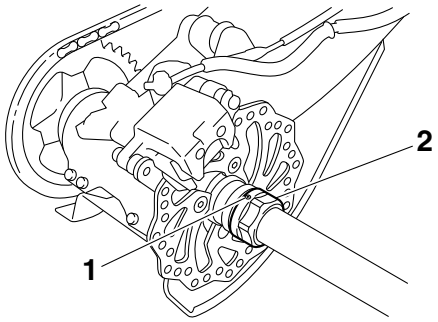

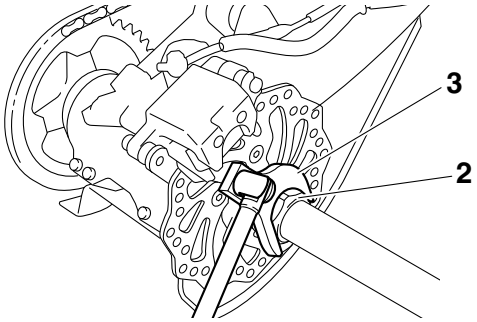

4. Loosen:
   - Drive chain
     Refer to “ADJUSTING THE DRIVE CHAIN SLACK” on page 3-24.
5. Elevate the rear wheels by placing a suitable stand under the frame.
6. Remove:
   - Rear wheels
   - Wheel hubs
   - Rear axle ring nut
   - Conical spring washer
7. Remove:
   - Rear axle “1”
     (with rear wheel sprocket)

ECA16180

NOTICE

- **Never directly tap the axle end with a hammer, since this will result in damage to the axle thread and spline.**
- **Attach a suitable socket on the axle end and tap it with a soft hammer, then pull out the rear axle to the left.**

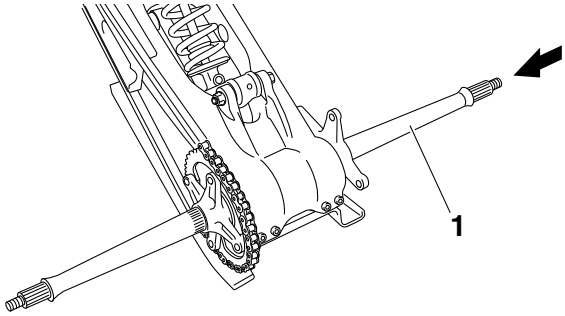

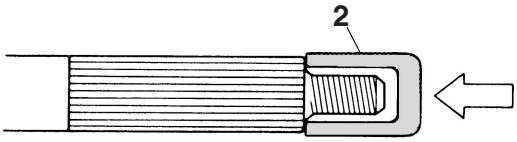

2. Suitable socket

8. Remove:
   - Circlip
   - Rear wheel sprocket bracket

EAS29500

CHECKING THE REAR AXLE

1. Check:
   - Rear axle runout “a”
     Out of specification → Replace.

EWA15020

WARNING

Do not attempt to straighten a bent axle.

Rear axle runout limit
1.5 mm (0.06 in)

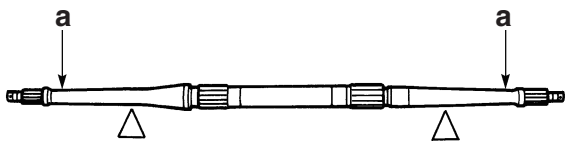

EAS29510
CHECKING THE REAR WHEEL SPROCKET
1. Check:
   - Rear wheel sprocket
     Refer to “CHAIN DRIVE” on page 4-63.

EAS1S3L015
CHECKING THE REAR BRAKE DISC
1. Check:
   - Brake disc
     Refer to “CHECKING THE REAR BRAKE DISC” on page 4-35.

EAS29520
INSTALLING THE REAR WHEEL SPROCKET
1. Install:
   - Rear wheel sprocket

TIP

Make sure that the blunt-edged corner “a” of the rear wheel sprocket is facing outward.

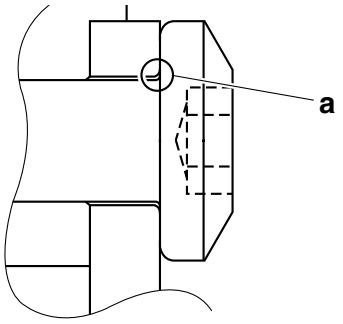

EAS29530
INSTALLING THE REAR AXLE
1. Install:
   - Conical spring washer “1”
   - Rear axle ring nut

TIP

Install the conical spring washer with the convex side of the washer facing outward as shown.

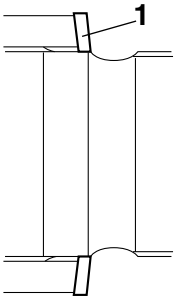

2. Install:
   - Rear wheels
     Refer to “REAR WHEELS” on page 4-9.
3. Tighten:
   - Rear axle ring nut “1”
   - Rear axle ring nut set bolts “2”

Rear axle ring nut
240 Nm (24.0 m·kg, 170 ft·lb)
LOCTITE®
Rear axle ring nut set bolt
7 Nm (0.7 m·kg, 5.1 ft·lb)
LOCTITE®

TIP

- Apply the brake pedal so that the rear axle does not turn when tightening the nut.
- Use the axle nut wrench “3”.

Axle nut wrench (46 mm)
90890-01498
Rear axle nut wrench 46 mm
YM-37134

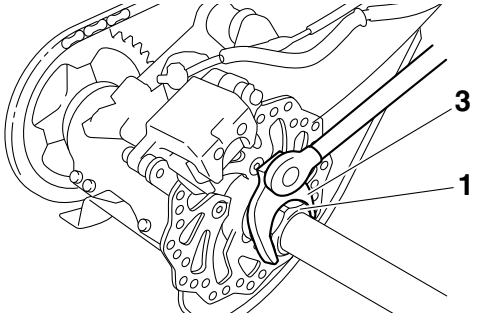

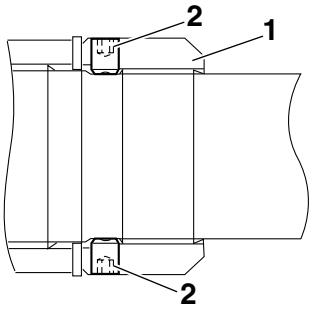

4. Adjust:
   - Drive chain slack
     Refer to “ADJUSTING THE DRIVE CHAIN SLACK” on page 3-24.

EAS22210

FRONT BRAKES

Removing the front brake pads

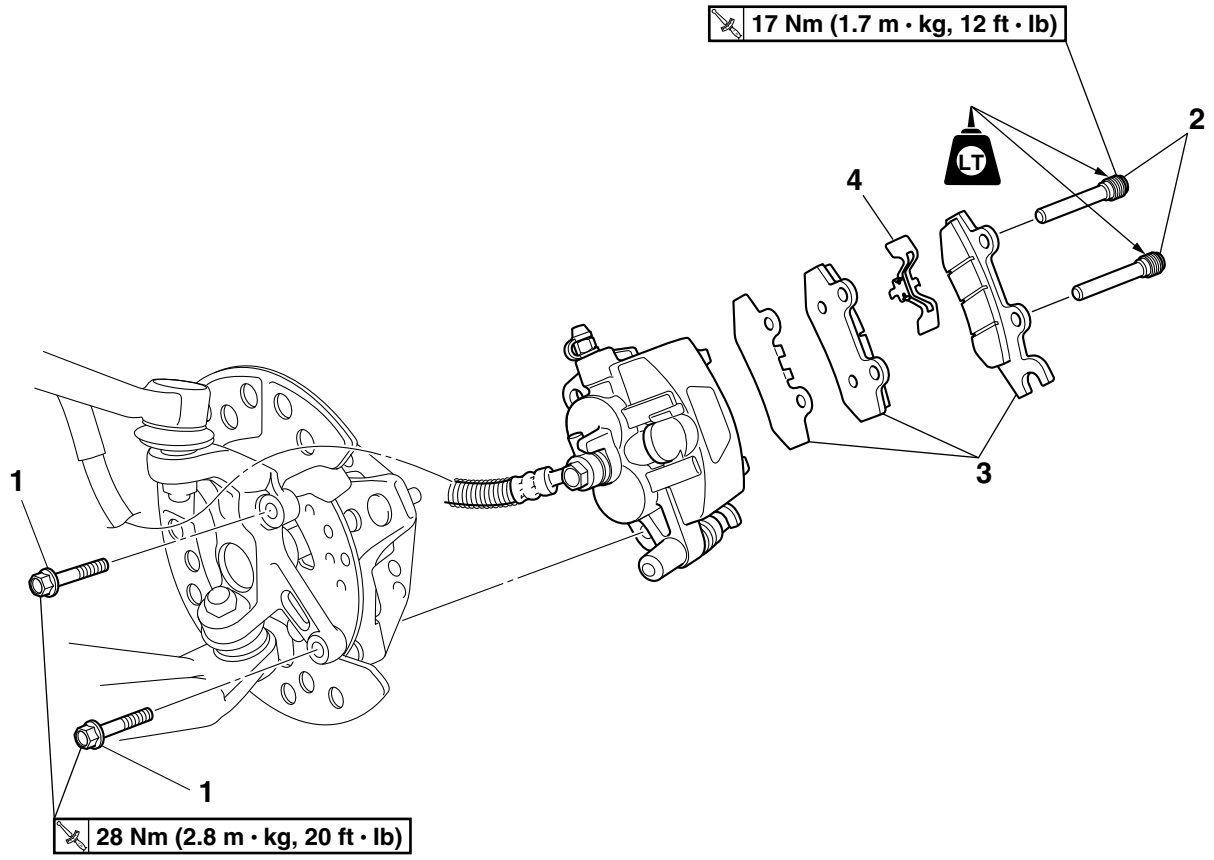

Order	Job/Parts to remove	Q'ty	Remarks
			The following procedure applies to both of the front brake calipers.
	Front wheel		Refer to "FRONT WHEELS" on page 4-5.
1	Brake caliper bolt	2	
2	Brake pad retaining bolt	2	
3	Brake pad/pad shim	2/1	
4	Brake pad spring	1	
			For installation, reverse the removal procedure.

Removing the front brake master cylinder

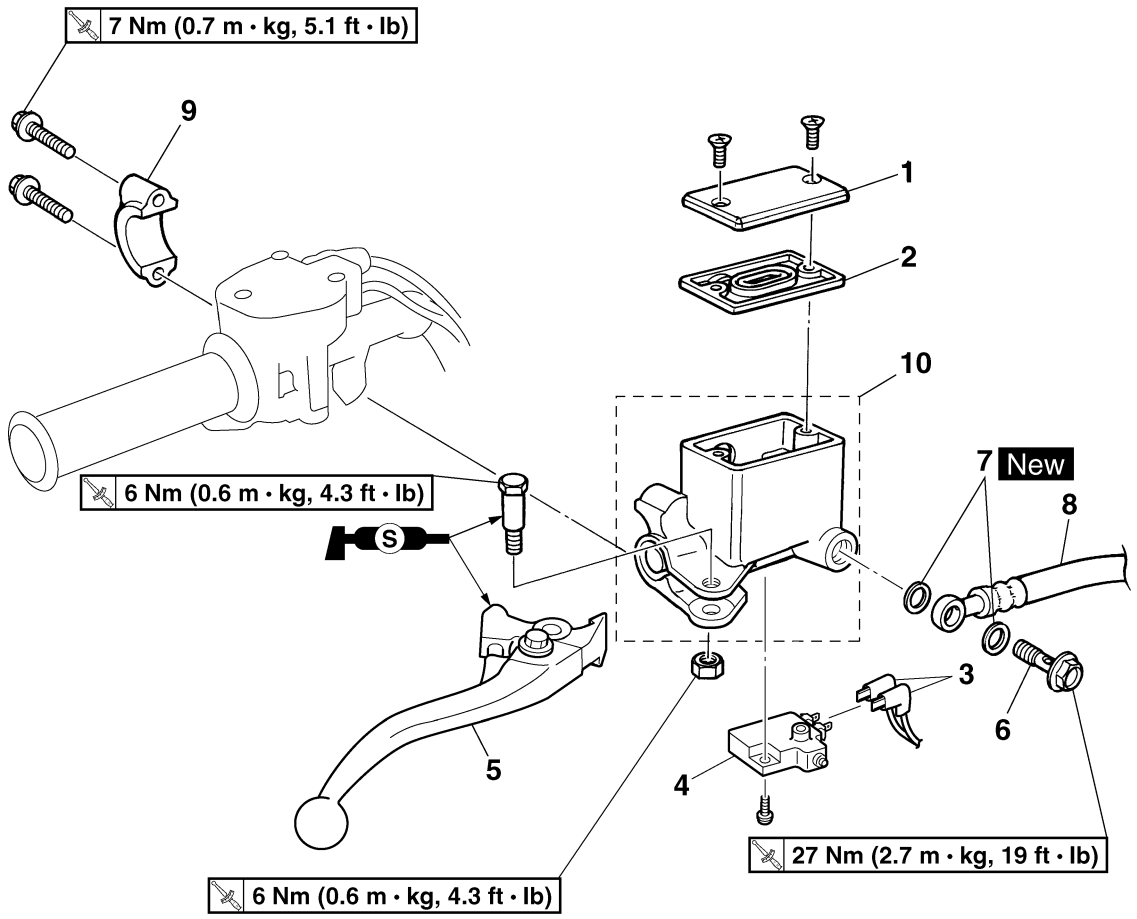

Order	Job/Parts to remove	Q'ty	Remarks
	Brake fluid		Drain.
1	Brake fluid reservoir cap	1	
2	Brake fluid reservoir diaphragm	1	
3	Front brake light switch connector	2	Disconnect.
4	Front brake light switch	1	
5	Brake lever	1	
6	Union bolt	1	
7	Copper washer	2	
8	Brake hose	1	Disconnect.
9	Brake master cylinder bracket	1	
10	Brake master cylinder	1	
			For installation, reverse the removal procedure.

Disassembling the front brake master cylinder

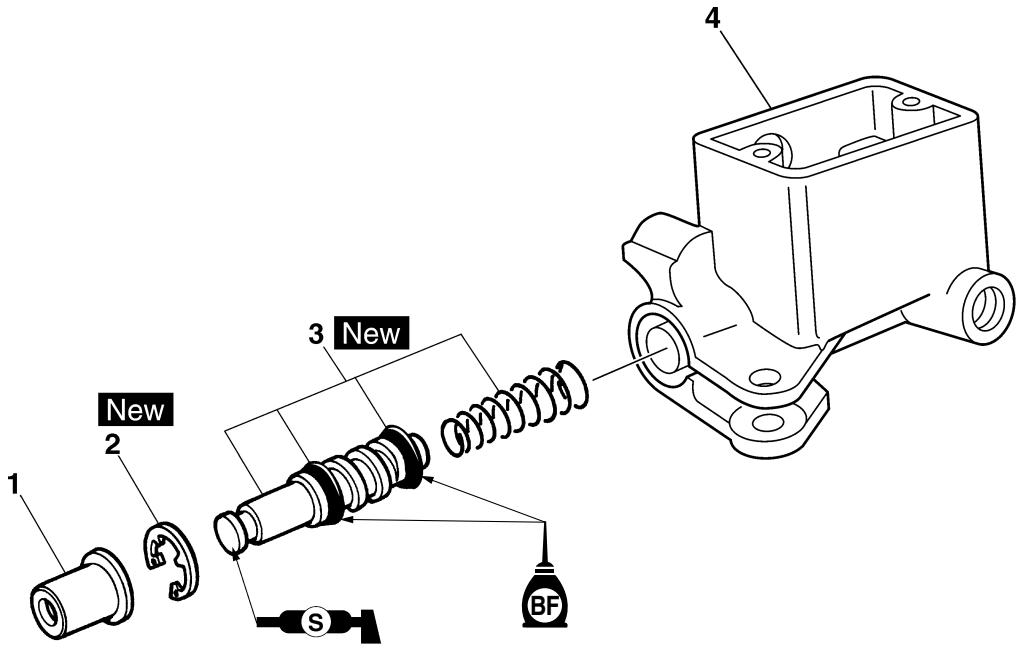

Order	Job/Parts to remove	Q'ty	Remarks
1	Dust boot	1	
2	Circlip	1	
3	Brake master cylinder kit	1	
4	Brake master cylinder body	1	
			For assembly, reverse the disassembly procedure.

Removing the front brake calipers

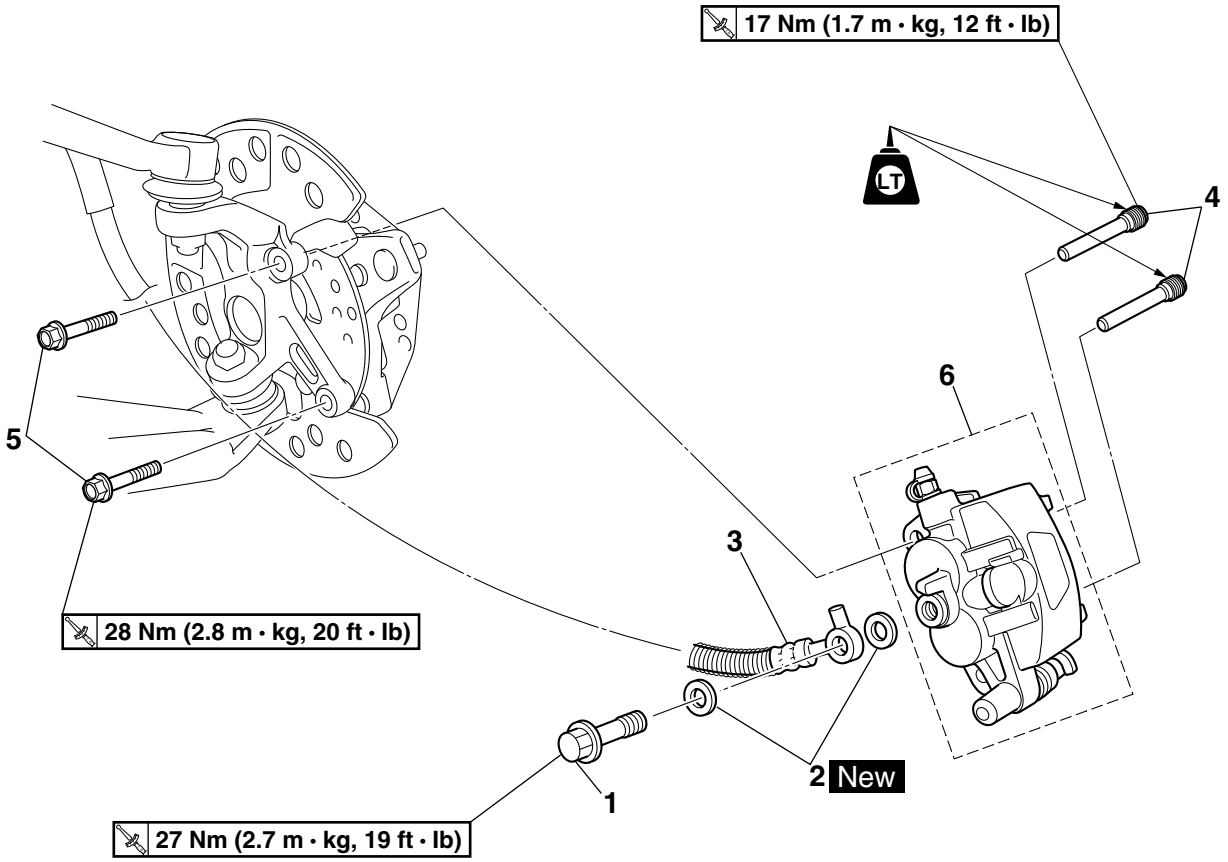

Order	Job/Parts to remove	Q'ty	Remarks
			The following procedure applies to both of the front brake calipers.
	Brake fluid		Drain.
	Front wheel		Refer to "FRONT WHEELS" on page 4-5.
1	Union bolt	1	
2	Copper washer	2	
3	Brake hose	1	Disconnect.
4	Brake pad retaining bolt	2	Loosen.
5	Brake caliper bolt	2	
6	Brake caliper assembly	1	
			For installation, reverse the removal procedure.

Disassembling the front brake calipers

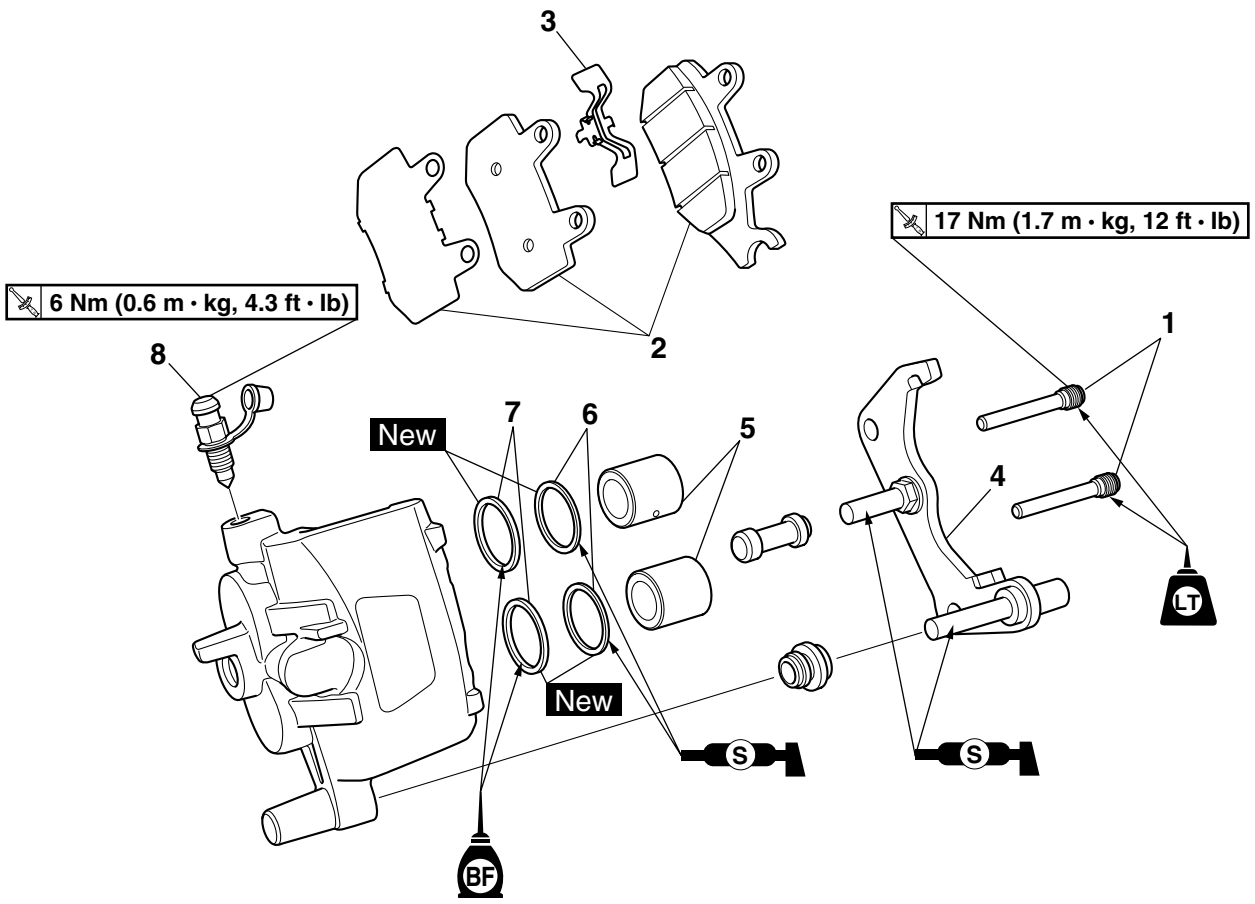

Order	Job/Parts to remove	Q'ty	Remarks
			The following procedure applies to both of the front brake calipers.
1	Brake caliper retaining bolt	2	
2	Brake pad/pad shim	2/1	
3	Brake pad spring	1	
4	Brake caliper bracket	1	
5	Brake caliper piston	2	
6	Brake caliper piston dust seal	2	
7	Brake caliper piston seal	2	
8	Bleed screw	1	
			For assembly, reverse the disassembly procedure.

EAS22220
INTRODUCTION

EWA14100
WARNING

Disc brake components rarely require disassembly. Therefore, always follow these preventive measures:
- **Never disassemble brake components unless absolutely necessary.**
- **If any connection on the hydraulic brake system is disconnected, the entire brake system must be disassembled, drained, cleaned, properly filled, and bled after reassembly.**
- **Never use solvents on internal brake components.**
- **Use only clean or new brake fluid for cleaning brake components.**
- **Brake fluid may damage painted surfaces and plastic parts. Therefore, always clean up any spilt brake fluid immediately.**
- **Avoid brake fluid coming into contact with the eyes as it can cause serious injury.**
- **FIRST AID FOR BRAKE FLUID ENTERING THE EYES:**
- **Flush with water for 15 minutes and get immediate medical attention.**

EAS22240
CHECKING THE FRONT BRAKE DISCS

The following procedure applies to both brake discs.

1. Remove:
   - Front wheel
     Refer to “FRONT WHEELS” on page 4-5.
2. Check:
   - Brake disc
     Damage/galling → Replace.
3. Measure:
   - Brake disc deflection
     Out of specification → Correct the brake disc deflection or replace the brake disc.

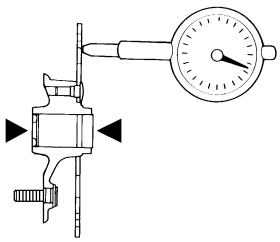

Brake disc deflection limit
0.15 mm (0.006 in)

▼▼▼▼▼▼▼▼▼▼▼▼▼▼▼▼▼▼▼▼▼▼▼▼▼▼▼▼▼▼▼▼▼▼

a. Hold the dial gauge at a right angle against the brake disc surface.
b. Measure the deflection 3.0 mm (0.12 in) below the edge of the brake disc.

▲▲▲▲▲▲▲▲▲▲▲▲▲▲▲▲▲▲▲▲▲▲▲▲▲▲▲▲▲▲▲▲▲▲

4. Measure:
   - Brake disc thickness “a”
     Measure the brake disc thickness at a few different locations.
     Out of specification → Replace.

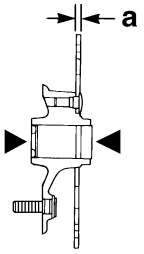

Brake disc thickness limit
3.0 mm (0.12 in)

5. Adjust:
   - Brake disc deflection

▼▼▼▼▼▼▼▼▼▼▼▼▼▼▼▼▼▼▼▼▼▼▼▼▼▼▼▼▼▼▼▼▼▼

a. Remove the brake disc.
b. Rotate the brake disc by one bolt hole.
c. Install the brake disc.

TIP

Tighten the brake disc bolts in stages and in a crisscross pattern.

Brake disc bolt
28 Nm (2.8 m·kg, 20 ft·lb)
LOCTITE®

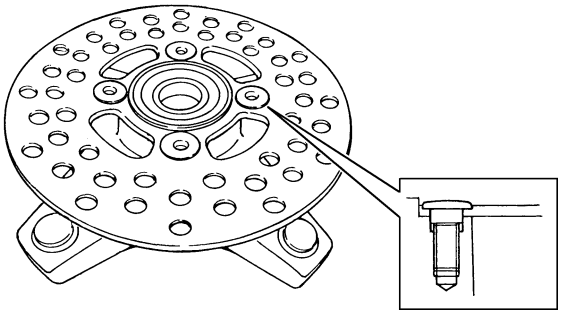

d. Measure the brake disc deflection.

e. If out of specification, repeat the adjustment steps until the brake disc deflection is within specification.
f. If the brake disc deflection cannot be brought within specification, replace the brake disc.

▲▲▲▲▲▲▲▲▲▲▲▲▲▲▲▲▲▲▲▲▲▲▲▲▲▲▲▲▲▲▲▲▲▲

6. Install:
   - Front wheels
     Refer to “FRONT WHEELS” on page 4-5.

EAS22250

REPLACING THE FRONT BRAKE PADS

The following procedure applies to both brake calipers.

TIP

When replacing the brake pads, it is not necessary to disconnect the brake hose or disassemble the brake caliper.

1. Remove:
   - Brake pads
2. Measure:
   - Brake pad wear limit “a”
     Out of specification → Replace the brake pads as a set.

Brake pad lining thickness (inner)
4.3 mm (0.17 in)
Limit
1.0 mm (0.04 in)
Brake pad lining thickness (outer)
4.3 mm (0.17 in)
Limit
1.0 mm (0.04 in)

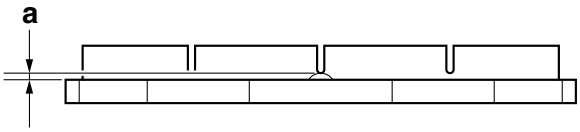

3. Install:
   - Brake pads
   - Brake pad springs

TIP

Always install new brake pads and a new brake pad spring as a set.

▼▼▼▼▼▼▼▼▼▼▼▼▼▼▼▼▼▼▼▼▼▼▼▼▼▼▼▼▼▼▼▼▼▼

a. Connect a clear plastic hose “1” tightly to the bleed screw “2”. Put the other end of the hose into an open container.

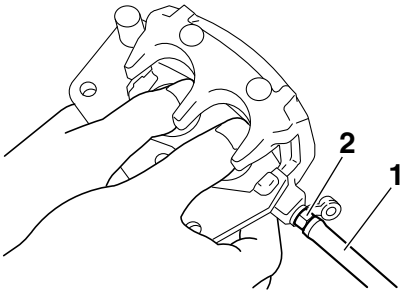

b. Loosen the bleed screw and push the brake caliper pistons into the brake caliper with your finger.
c. Tighten the bleed screw.

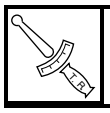

Bleed screw
6 Nm (0.6 m·kg, 4.3 ft·lb)

d. Install new brake pads and a new brake pad spring.

▲▲▲▲▲▲▲▲▲▲▲▲▲▲▲▲▲▲▲▲▲▲▲▲▲▲▲▲▲▲▲▲▲▲

4. Install:
   - Brake pad retaining bolt
   - Brake caliper

Brake pad retaining bolt
17 Nm (1.7 m·kg, 12 ft·lb)
LOCTITE®
Brake caliper bolt
28 Nm (2.8 m·kg, 20 ft·lb)

5. Check:
   - Brake fluid level
     Below the minimum level mark → Add the specified brake fluid to the proper level.
     Refer to “CHECKING THE BRAKE FLUID LEVEL” on page 3-19.
6. Check:
   - Brake lever operation
     Soft or spongy feeling → Bleed the brake system.
     Refer to “BLEEDING THE HYDRAULIC BRAKE SYSTEM” on page 3-22.

EAS22320

DISASSEMBLING THE FRONT BRAKE CALIPERS

The following procedure applies to both of the brake calipers.

TIP

Before disassembling the brake caliper, drain the brake fluid from the entire brake system.

1. Remove:
   - Brake caliper pistons
   - Brake caliper piston dust seals “1”
   - Brake caliper piston seals “2”

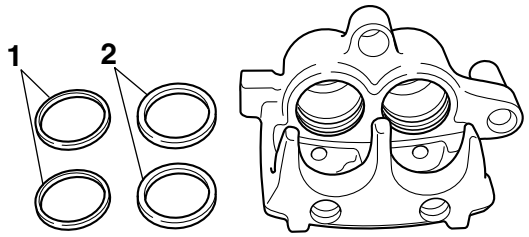

▼▼▼▼▼▼▼▼▼▼▼▼▼▼▼▼▼▼▼▼▼▼▼▼▼▼▼▼▼▼▼▼▼▼

a. Blow compressed air into the brake hose joint opening “a” to force out the pistons from the brake caliper.

EWA1PE1002

WARNING

- **Cover the brake caliper pistons with a rag. Be careful not to get injured when the piston is expelled from the brake caliper.**
- **Never try to pry out the brake caliper pistons.**

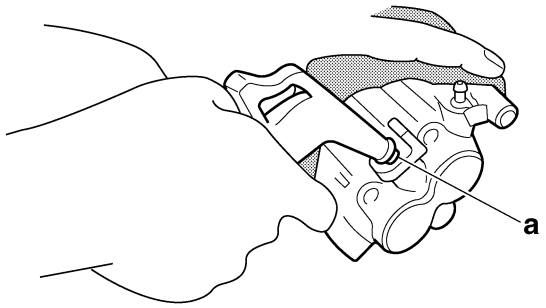

b. Remove the brake caliper piston dust seal and brake caliper piston seal.

▲▲▲▲▲▲▲▲▲▲▲▲▲▲▲▲▲▲▲▲▲▲▲▲▲▲▲▲▲▲▲▲▲▲

EAS22380

CHECKING THE FRONT BRAKE CALIPER

The following procedure applies to both of the brake calipers.

Recommended brake component replacement schedule	
Brake pads	If necessary
Piston seals, dust seals	Every two years
Brake hoses	Every four years
Brake fluid	Every two years and whenever the brake is disassembled

1. Check:
   - Brake caliper pistons “1”
     Rust/scratches/wear → Replace the brake caliper pistons.
   - Brake caliper cylinders “2”
     Scratches/wear → Replace the brake caliper assembly.
   - Brake caliper body “3”
     Cracks/damage → Replace the brake caliper assembly.
   - Brake fluid delivery passages (brake caliper body)
     Obstruction → Blow out with compressed air.

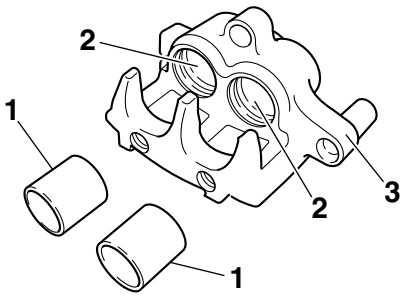

EWA1S3L005

WARNING

Whenever a brake caliper is disassembled, replace the brake caliper piston seals and dust seals.

EAS22410

ASSEMBLING THE FRONT BRAKE CALIPERS

The following procedure applies to both of the brake calipers.

EWA1S3L006

WARNING

- **Before installation, all internal brake components should be cleaned and lubricated with clean or new brake fluid.**
- **Never use solvents on internal brake components as they will cause the piston seals to swell and distort.**
- **Whenever a brake caliper is disassembled, replace the brake caliper piston seals and dust seals.**

Specified brake fluid
DOT 4

1. Install:
   - Brake caliper piston seals “1” New
   - Brake caliper piston dust seals “2” New

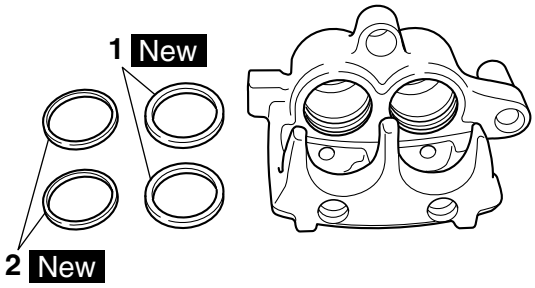

2. Install:
   - Brake caliper pistons “1”

3. Install:
   - Brake pads
     Refer to “REPLACING THE FRONT BRAKE PADS” on page 4-23.

EAS22440

INSTALLING THE FRONT BRAKE CALIPERS

The following procedure applies to both of the brake calipers.

1. Install:
   - Brake caliper assembly
   - Brake caliper bolts “1”
   - Brake hose “2”
   - Copper washers “3” New
   - Union bolt “4”

Brake caliper bolt
28 Nm (2.8 m·kg, 20 ft·lb)
Brake hose union bolt
27 Nm (2.7 m·kg, 19 ft·lb)

EWA13530

WARNING

Proper brake hose routing is essential to insure safe vehicle operation. Refer to “CABLE ROUTING” on page 2-41.

ECA1S3L011

NOTICE

When installing the brake hose onto the brake caliper, make sure the brake pipe “a” touches the projection “b” on the brake caliper.

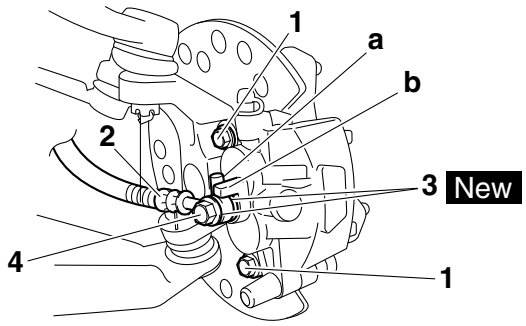

2. Fill:
   - Brake master cylinder reservoir
     (with the specified amount of the specified brake fluid)

Specified brake fluid
DOT 4

EWA13090

WARNING

- **Use only the designated brake fluid. Other brake fluids may cause the rubber seals to deteriorate, causing leakage and poor brake performance.**
- **Refill with the same type of brake fluid that is already in the system. Mixing brake fluids may result in a harmful chemical reaction, leading to poor brake performance.**
- **When refilling, be careful that water does not enter the brake fluid reservoir. Water will significantly lower the boiling point of the brake fluid and could cause vapor lock.**

ECA13540

NOTICE

Brake fluid may damage painted surfaces and plastic parts. Therefore, always clean up any spilt brake fluid immediately.

3. Bleed:
   - Brake system
     Refer to “BLEEDING THE HYDRAULIC BRAKE SYSTEM” on page 3-22.

4. Check:
   - Brake fluid level
     Below the minimum level mark → Add the specified brake fluid to the proper level.
     Refer to “CHECKING THE BRAKE FLUID LEVEL” on page 3-19.
5. Check:
   - Brake lever operation
     Soft or spongy feeling → Bleed the brake system.
     Refer to “BLEEDING THE HYDRAULIC BRAKE SYSTEM” on page 3-22.

EAS22500
CHECKING THE FRONT BRAKE MASTER CYLINDER

1. Check:
   - Brake master cylinder “1”
     Damage/scratches/wear → Replace.
   - Brake fluid delivery passages “2” (brake master cylinder body)
     Obstruction → Blow out with compressed air.

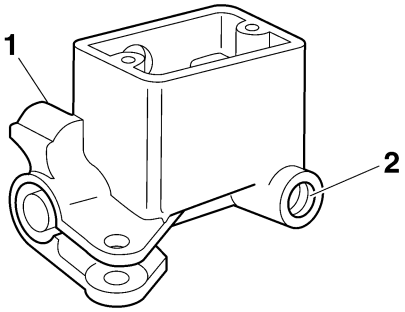

2. Check:
   - Brake master cylinder kit
     Damage/scratches/wear → Replace.

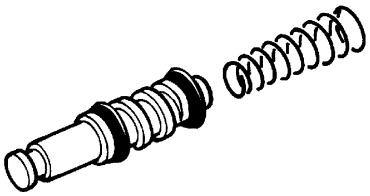

3. Check:
   - Brake master cylinder reservoir “1”
     Cracks/damage → Replace.
   - Brake master cylinder reservoir diaphragm “2”
     Damage/wear → Replace.

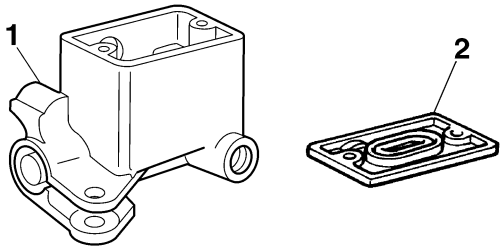

4. Check:
   - Brake hoses
     Cracks/damage/wear → Replace.

EAS22520
ASSEMBLING THE FRONT BRAKE MASTER CYLINDER

EWA1S3L007

WARNING

- **Before installation, all internal brake components should be cleaned and lubricated with clean or new brake fluid.**
- **Never use solvents on internal brake components.**
- **Whenever a master cylinder is disassembled, replace the brake master cylinder kit.**

Specified brake fluid
DOT 4

EAS22530
INSTALLING THE FRONT BRAKE MASTER CYLINDER

1. Install:
   - Brake master cylinder “1”

Brake master cylinder bracket bolt
7 Nm (0.7 m·kg, 5.1 ft·lb)

TIP

- Install the brake master cylinder holder with the “UP” mark facing up.
- First, tighten the upper bolt, then the lower bolt.

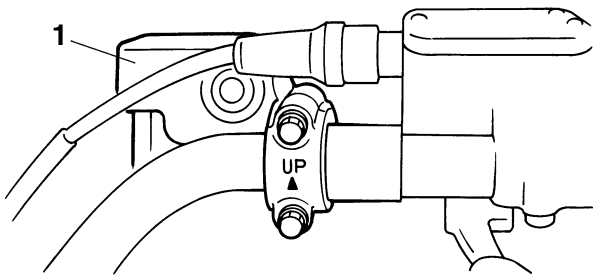

2. Install:
   - Copper washers New
   - Brake hose
   - Union bolt

	**Brake hose union bolt** **27 Nm (2.7 m·kg, 19 ft·lb)**

EWA13530

WARNING

Proper brake hose routing is essential to insure safe vehicle operation. Refer to "CABLE ROUTING" on page 2-41.

TIP

- While holding the brake hose, tighten the union bolt as shown.
- Turn the handlebar to the left and right to make sure the brake hose does not touch other parts (e.g., wire harness, cables, leads). Correct if necessary.

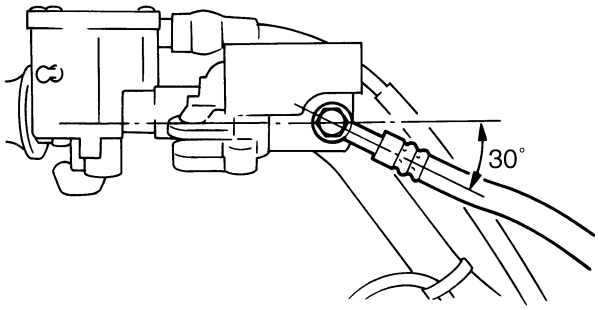

3. Fill:
   - Brake master cylinder reservoir
     (with the specified amount of the specified brake fluid)

	**Specified brake fluid** **DOT 4**

EWA13540

WARNING

- **Use only the designated brake fluid. Other brake fluids may cause the rubber seals to deteriorate, causing leakage and poor brake performance.**
- **Refill with the same type of brake fluid that is already in the system. Mixing brake fluids may result in a harmful chemical reaction, leading to poor brake performance.**
- **When refilling, be careful that water does not enter the brake master cylinder reservoir. Water will significantly lower the boiling point of the brake fluid and could cause vapor lock.**

ECA13540

NOTICE

Brake fluid may damage painted surfaces and plastic parts. Therefore, always clean up any spilt brake fluid immediately.

4. Bleed:
   - Brake system
     Refer to "BLEEDING THE HYDRAULIC BRAKE SYSTEM" on page 3-22.
5. Check:
   - Brake fluid level
     Below the minimum level mark → Add the specified brake fluid to the proper level.
     Refer to "CHECKING THE BRAKE FLUID LEVEL" on page 3-19.
6. Check:
   - Brake lever operation
     Soft or spongy feeling → Bleed the brake system.
     Refer to "BLEEDING THE HYDRAULIC BRAKE SYSTEM" on page 3-22.

EAS22550

REAR BRAKE

Removing the rear brake pads

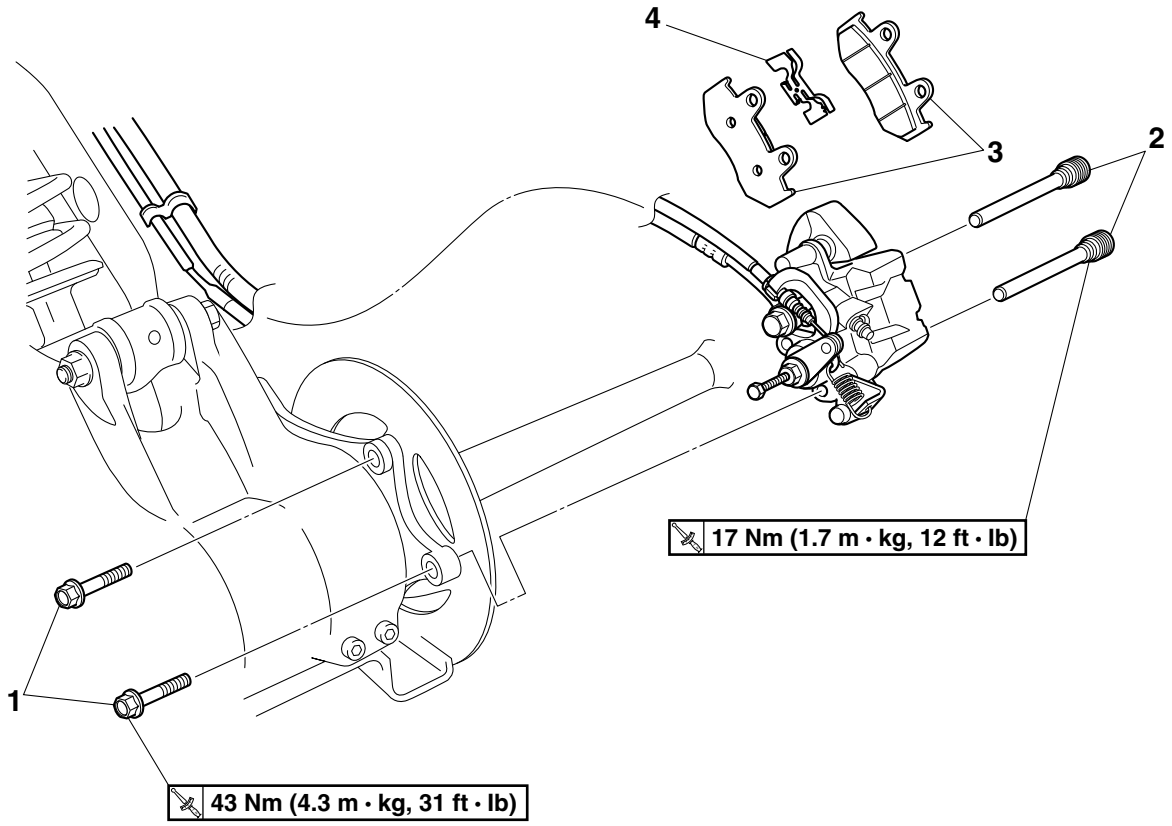

Order	Job/Parts to remove	Q'ty	Remarks
1	Brake caliper bolt	2	
2	Brake pad retaining bolt	2	
3	Brake pad	2	
4	Brake pad spring	1	
			For installation, reverse the removal procedure.

Removing the rear brake master cylinder

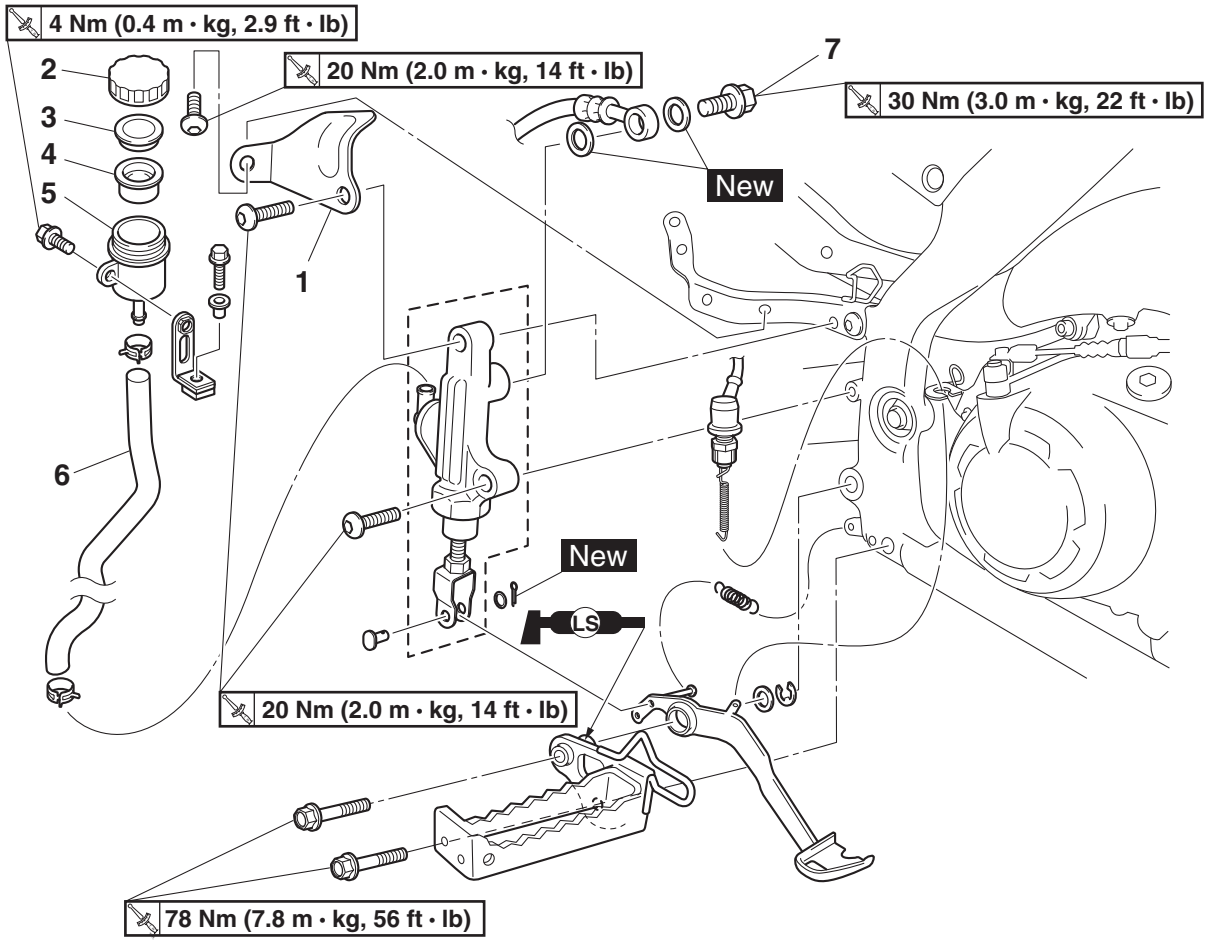

Order	Job/Parts to remove	Q'ty	Remarks
	Right foot protector		Refer to "GENERAL CHASSIS" on page 4-1.
	Brake fluid		Drain.
1	Brake fluid reservoir hose cover	1	
2	Brake fluid reservoir cap	1	
3	Brake fluid reservoir diaphragm holder	1	
4	Brake fluid reservoir diaphragm	1	
5	Brake fluid reservoir	1	
6	Brake fluid reservoir hose	1	
7	Union bolt	1	

Removing the rear brake master cylinder

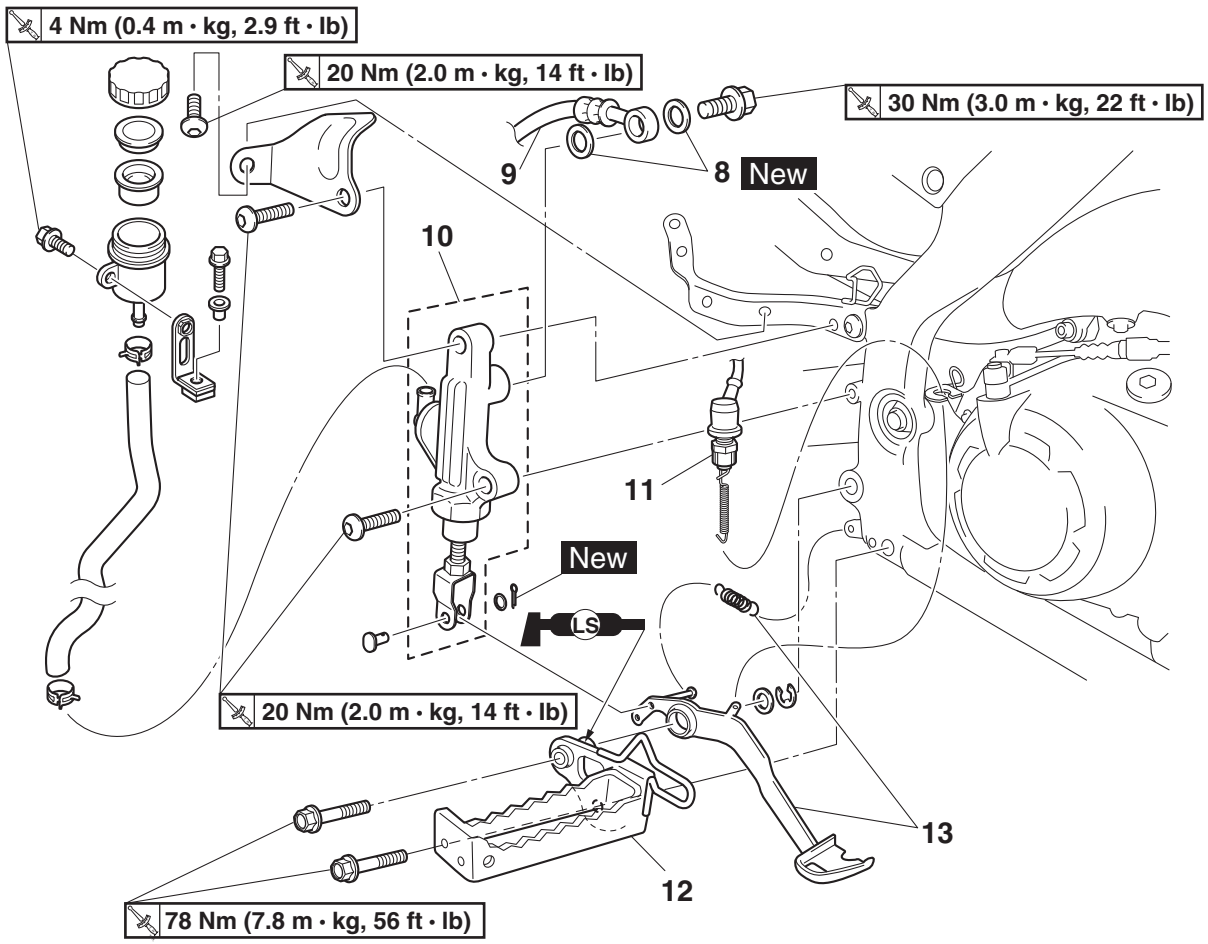

Order	Job/Parts to remove	Q'ty	Remarks
8	Copper washer	2	
9	Brake hose	1	Disconnect.
10	Brake master cylinder	1	
11	Rear brake light switch	1	
12	Right footrest	1	
13	Brake pedal/spring	1/1	
			For installation, reverse the removal procedure.

Disassembling the rear brake master cylinder

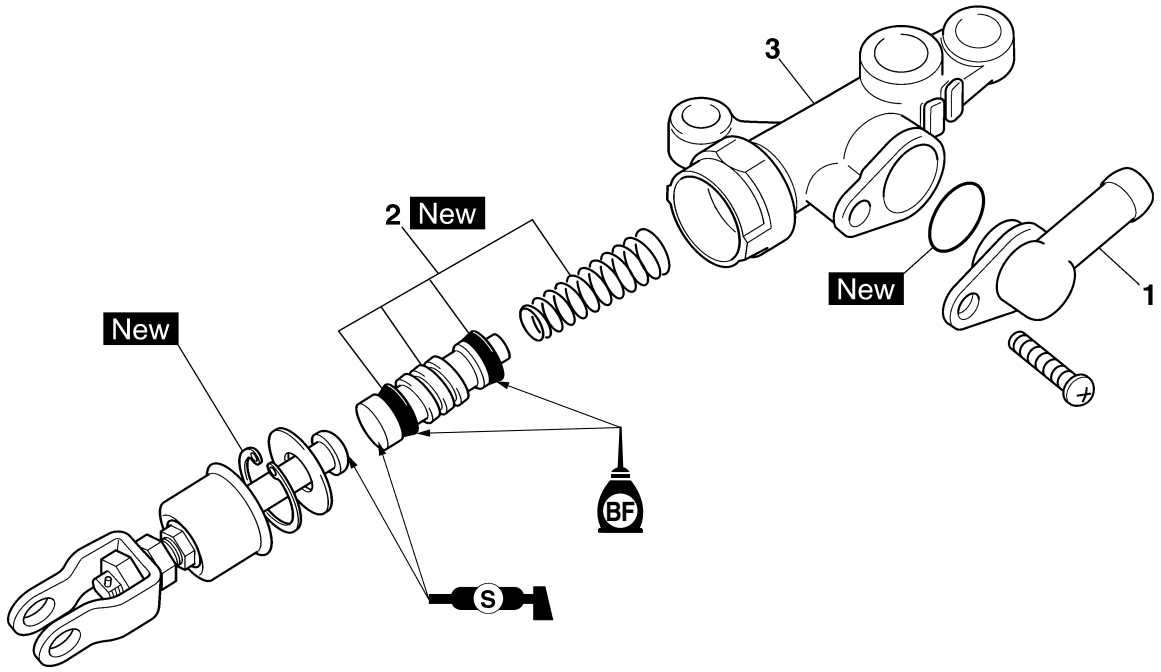

Order	Job/Parts to remove	Q'ty	Remarks
1	Hose joint	1	
2	Brake master cylinder kit	1	
3	Brake master cylinder	1	
			For assembly, reverse the disassembly procedure.

Removing the rear brake caliper

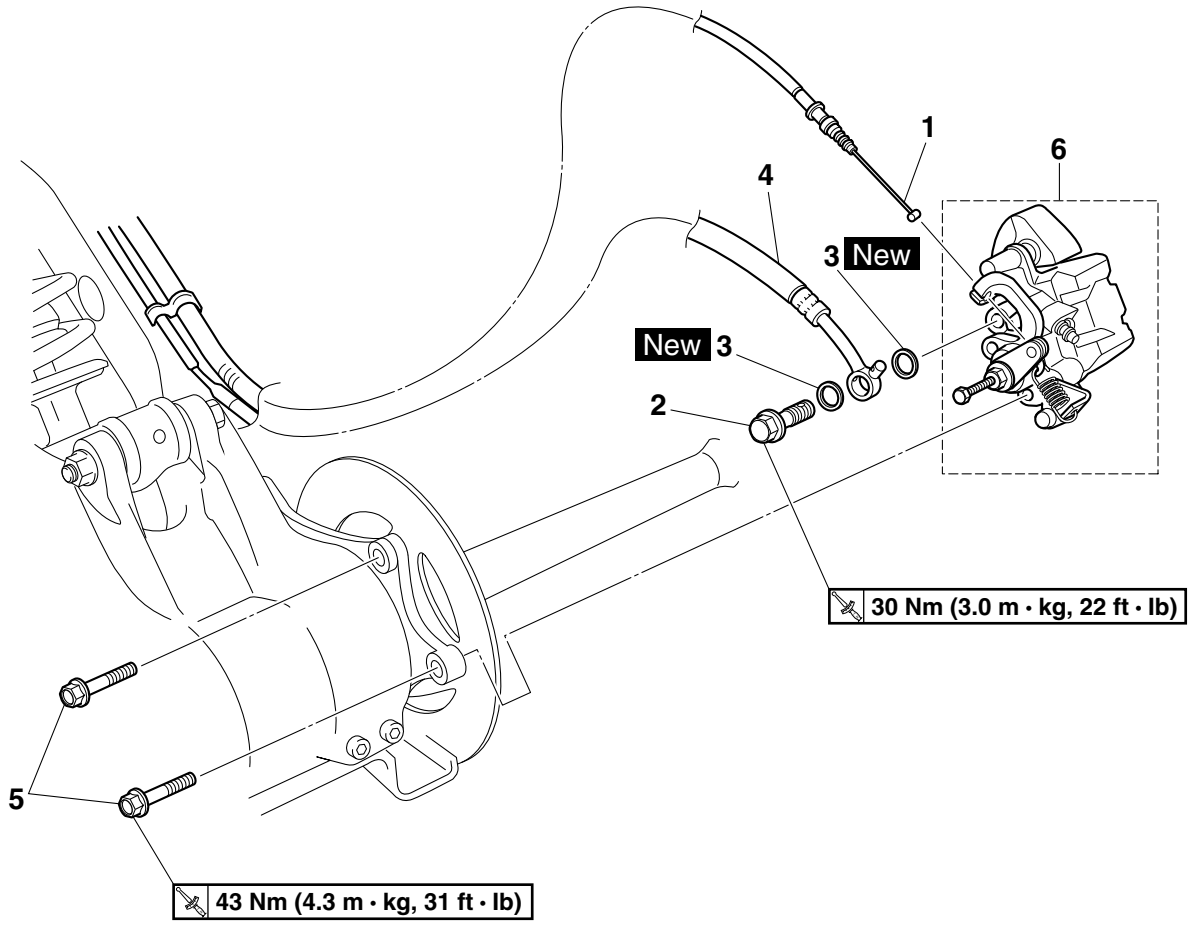

Order	Job/Parts to remove	Q'ty	Remarks
	Brake fluid		Drain.
1	Parking brake cable	1	Disconnect.
2	Union bolt	1	
3	Copper washer	2	
4	Brake hose	1	Disconnect.
5	Brake caliper bolt	2	
6	Brake caliper assembly	1	
			For installation, reverse the removal procedure.

Disassembling the rear brake caliper

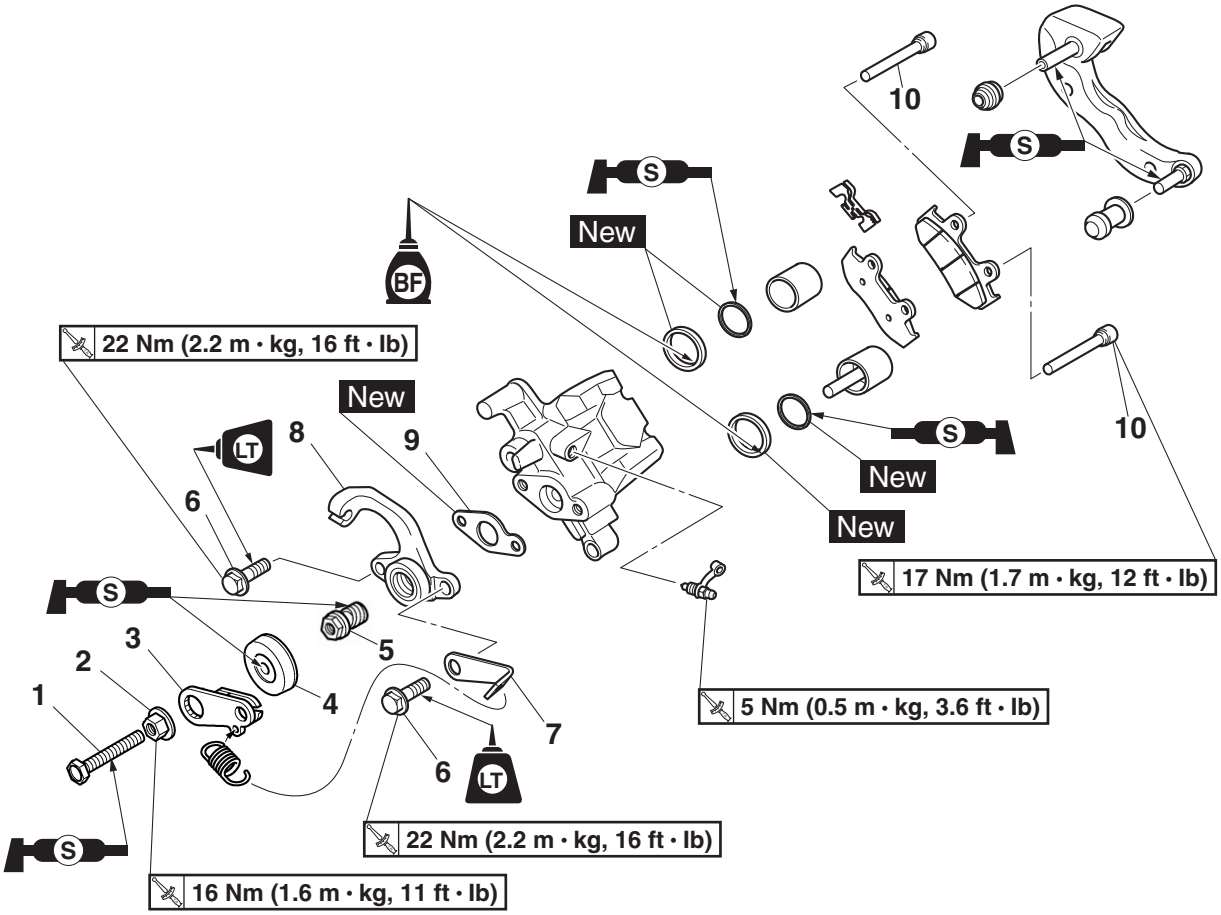

Order	Job/Parts to remove	Q'ty	Remarks
1	Adjusting bolt	1	
2	Locknut	1	
3	Parking brake arm	1	
4	Rubber boot	1	
5	Parking brake shaft	1	
6	Parking brake bracket bolt	2	
7	Parking brake case bracket	1	
8	Parking brake case	1	
9	Gasket	1	
10	Brake pad retaining bolt	2	

Disassembling the rear brake caliper

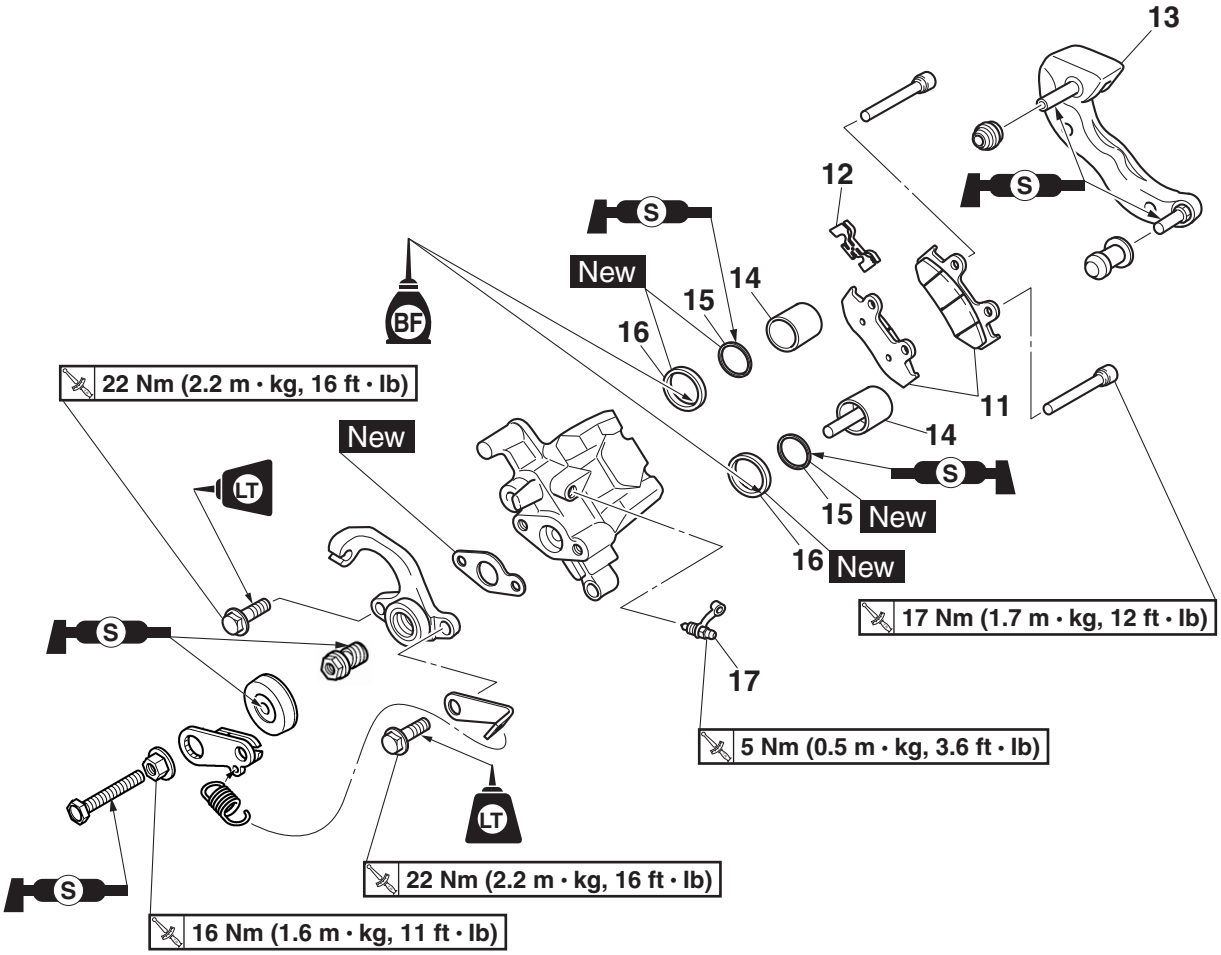

Order	Job/Parts to remove	Q'ty	Remarks
11	Brake pad	2	
12	Brake pad spring	1	
13	Caliper bracket	1	
14	Brake caliper piston	2	
15	Brake caliper piston dust seal	2	
16	Brake caliper piston seal	2	
17	Bleed screw	1	
			For assembly, reverse the disassembly procedure.

EAS22560
INTRODUCTION

EWA14100
WARNING

Disc brake components rarely require disassembly. Therefore, always follow these preventive measures:
- **Never disassemble brake components unless absolutely necessary.**
- **If any connection on the hydraulic brake system is disconnected, the entire brake system must be disassembled, drained, cleaned, properly filled, and bled after reassembly.**
- **Never use solvents on internal brake components.**
- **Use only clean or new brake fluid for cleaning brake components.**
- **Brake fluid may damage painted surfaces and plastic parts. Therefore, always clean up any spilt brake fluid immediately.**
- **Avoid brake fluid coming into contact with the eyes as it can cause serious injury.**
- **FIRST AID FOR BRAKE FLUID ENTERING THE EYES:**
- **Flush with water for 15 minutes and get immediate medical attention.**

EAS22570
CHECKING THE REAR BRAKE DISC

1. Remove:
   - Rear wheels
     Refer to “REAR WHEELS” on page 4-9.
2. Check:
   - Brake disc
     Damage/galling → Replace.
3. Measure:
   - Brake disc deflection
     Out of specification → Correct the brake disc deflection or replace the brake disc.
     Refer to “CHECKING THE FRONT BRAKE DISCS” on page 4-22.

Brake disc deflection limit
0.15 mm (0.006 in)

4. Measure:
   - Brake disc thickness
     Measure the brake disc thickness at a few different locations.
     Out of specification → Replace.
     Refer to “CHECKING THE FRONT BRAKE DISCS” on page 4-22.

Brake disc thickness limit
3.5 mm (0.14 in)

5. Adjust:
   - Brake disc deflection
     Refer to “CHECKING THE FRONT BRAKE DISCS” on page 4-22.

Brake disc bolt
33 Nm (3.3 m·kg, 24 ft·lb)
LOCTITE®

6. Install:
   - Rear wheels
     Refer to “REAR WHEELS” on page 4-9.

EAS22580
REPLACING THE REAR BRAKE PADS

TIP

When replacing the brake pads, it is not necessary to disconnect the brake hose or disassemble the brake caliper.

1. Remove:
   - Brake pads
2. Measure:
   - Brake pad wear limit “a”
     Out of specification → Replace the brake pads as a set.

Brake pad lining thickness (inner)
5.4 mm (0.21 in)
Limit
1.0 mm (0.04 in)
Brake pad lining thickness (outer)
5.4 mm (0.21 in)
Limit
1.0 mm (0.04 in)

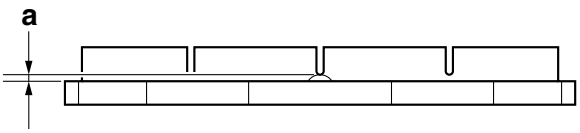

3. Install:
   - Brake pads
   - Brake pad spring

TIP

Always install new brake pads and brake pad spring as a set.

▼▼▼▼▼▼▼▼▼▼▼▼▼▼▼▼▼▼▼▼▼▼▼▼▼▼▼▼▼▼▼▼▼▼

a. Connect a clear plastic hose "1" tightly to the bleed screw "2". Put the other end of the hose into an open container.

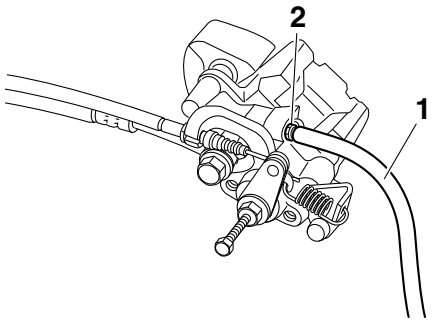

b. Loosen the brake caliper bleed screw, and then push the caliper pistons "3" into the brake caliper.

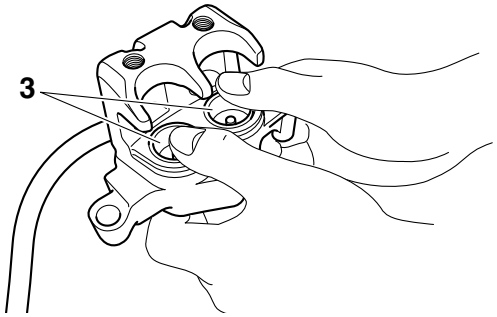

c. Tighten the bleed screw.

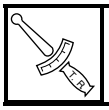	**Bleed screw** **5 Nm (0.5 m·kg, 3.6 ft·lb)**

d. Install new brake pads and new brake pad spring.

▲▲▲▲▲▲▲▲▲▲▲▲▲▲▲▲▲▲▲▲▲▲▲▲▲▲▲▲▲▲▲▲▲▲

4. Install:
   - Brake pad retaining bolts
   - Brake caliper assembly

	**Brake pad retaining bolt** **17 Nm (1.7 m·kg, 12 ft·lb)** **Brake caliper bolt** **43 Nm (4.3 m·kg, 31 ft·lb)**

5. Check:
   - Brake fluid level
     Below the minimum level mark → Add the specified brake fluid to the proper level.
     Refer to "CHECKING THE BRAKE FLUID LEVEL" on page 3-19.
6. Check:
   - Brake pedal operation
     Soft or spongy feeling → Bleed the brake system.
     Refer to "BLEEDING THE HYDRAULIC BRAKE SYSTEM" on page 3-22.

EAS22590

REMOVING THE REAR BRAKE CALIPER

1. Remove:
   - Union bolt
   - Copper washers
   - Brake hose

TIP

Put the end of the brake hose into a container and pump out the brake fluid carefully.

EAS22630

DISASSEMBLING THE REAR BRAKE CALIPER

TIP

Before disassembling the brake caliper, drain the brake fluid from the entire brake system.

1. Remove:
   - Brake caliper pistons
   - Brake caliper piston dust seals "1"
   - Brake caliper piston seals "2"

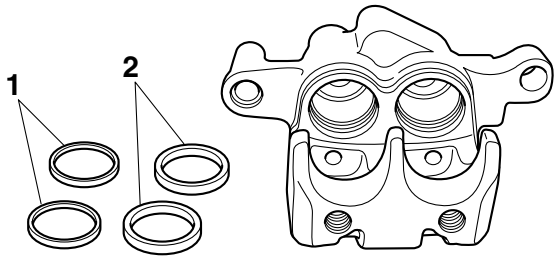

▼▼▼▼▼▼▼▼▼▼▼▼▼▼▼▼▼▼▼▼▼▼▼▼▼▼▼▼▼▼▼▼▼▼

a. Blow compressed air into the hose joint opening to force out the caliper pistons from the brake caliper body.

EWA1PE1001

⚠ WARNING

- **Never try to pry out the caliper pistons.**
- **Cover the caliper pistons with a rag. Be careful not to get injured when the pistons is expelled from the caliper cylinder.**

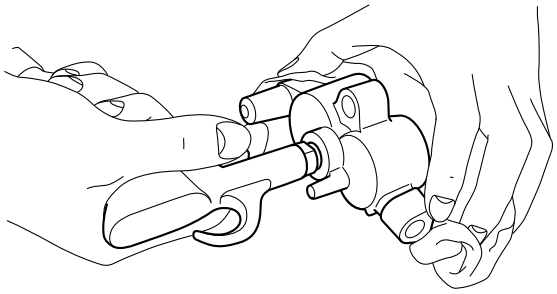

b. Remove the brake caliper piston dust seals and caliper piston seals.

▲▲▲▲▲▲▲▲▲▲▲▲▲▲▲▲▲▲▲▲▲▲▲▲▲▲▲▲▲▲▲▲▲▲

EAS22640

CHECKING THE REAR BRAKE CALIPER

Recommended brake component replacement schedule	
Brake pads	If necessary
Piston seal, dust seal	Every two years
Brake hoses	Every four years
Brake fluid	Every two years and whenever the brake is disassembled

1. Check:
   - Brake caliper pistons “1”
     Rust/scratches/wear → Replace the brake caliper assembly.
   - Brake caliper cylinder “2”
     Scratches/wear → Replace the brake caliper assembly.
   - Brake caliper body “3”
     Cracks/damage → Replace the brake caliper assembly.
   - Brake fluid delivery passages (brake caliper body)
     Obstruction → Blow out with compressed air.

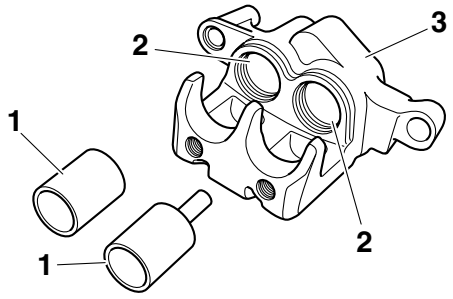

EWA1PE1003

WARNING

Whenever a brake caliper is disassembled, replace the brake caliper piston seals and dust seals.

EAS22660

ASSEMBLING THE REAR BRAKE CALIPER

EWA1PE1004

WARNING

- **Before installation, all internal brake components should be cleaned and lubricated with clean or new brake fluid.**
- **Never use solvents on internal brake components as they will cause the piston seals to swell and distort.**
- **Whenever a brake caliper is disassembled, replace the brake caliper piston seals and dust seals.**

Specified brake fluid
DOT 4

1. Install:
   - Brake caliper piston seals “1” New
   - Brake caliper piston dust seals “2” New

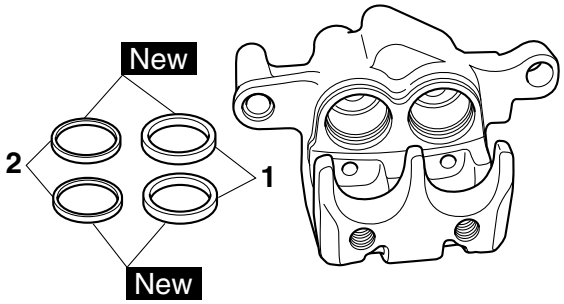

2. Install:
   - Brake caliper pistons “1”

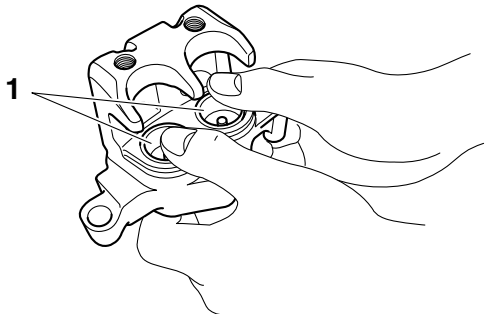

3. Install:
   - Parking brake shaft “1”

TIP

When installing the parking brake shaft, the punch mark "a" should be between the marks "b" with the parking brake shaft fully turned in.

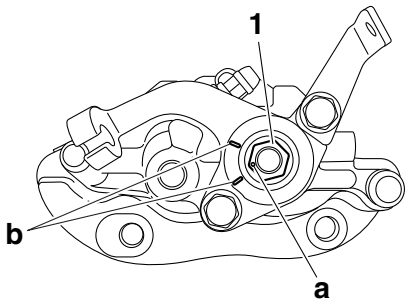

4. Install:
   - Parking brake arm "1"

TIP

When installing the parking brake arm, align the center "a" on the parking brake arm with the punch mark "b" on the parking brake shaft.

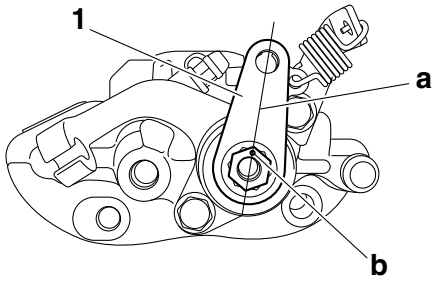

EAS22670

INSTALLING THE REAR BRAKE CALIPER

1. Install:
   - Brake caliper assembly
   - Brake caliper bolts "1"
   - Brake hose "2"
   - Copper washers "3" New
   - Union bolt "4"

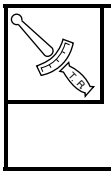

Brake caliper bolt
43 Nm (4.3 m·kg, 31 ft·lb)
Brake hose union bolt
30 Nm (3.0 m·kg, 22 ft·lb)

EWA13530

WARNING

Proper brake hose routing is essential to insure safe vehicle operation. Refer to "CABLE ROUTING" on page 2-41.

ECA1S3L012

NOTICE

When installing the brake hose onto the brake caliper, make sure the brake pipe "a" touches the projection "b" on the brake caliper.

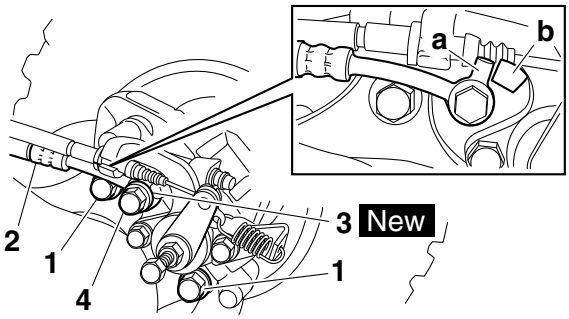

2. Fill:
   - Brake fluid reservoir
     (with the specified amount of the specified brake fluid)

Specified brake fluid
DOT 4

EWA13090

WARNING

- **Use only the designated brake fluid. Other brake fluids may cause the rubber seals to deteriorate, causing leakage and poor brake performance.**
- **Refill with the same type of brake fluid that is already in the system. Mixing brake fluids may result in a harmful chemical reaction, leading to poor brake performance.**
- **When refilling, be careful that water does not enter the brake fluid reservoir. Water will significantly lower the boiling point of the brake fluid and could cause vapor lock.**

ECA13540

NOTICE

Brake fluid may damage painted surfaces and plastic parts. Therefore, always clean up any spilt brake fluid immediately.

3. Bleed:
   - Brake system
     Refer to "BLEEDING THE HYDRAULIC BRAKE SYSTEM" on page 3-22.
4. Check:
   - Brake fluid level
     Below the minimum level mark → Add the specified brake fluid to the proper level.
     Refer to "CHECKING THE BRAKE FLUID LEVEL" on page 3-19.

5. Check:
   - Brake pedal operation
     Soft or spongy feeling → Bleed the brake system.
     Refer to "BLEEDING THE HYDRAULIC BRAKE SYSTEM" on page 3-22.
6. Adjust:
   - Parking brake cable end length "a"

▼▼▼▼▼▼▼▼▼▼▼▼▼▼▼▼▼▼▼▼▼▼▼▼▼▼▼▼▼▼▼▼▼▼

a. Loosen the locknut "1" and adjusting bolt "2".

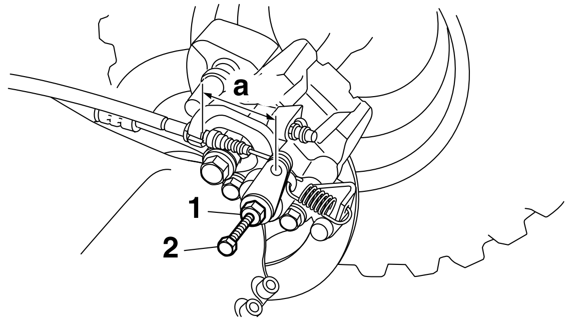

b. Slide back the rubber cover "3".
c. Loosen the locknut "4".
d. Turn the adjusting nut "5" in direction "b" or "c" until the specified brake cable end length "a" is obtained.

Parking brake cable end length
47.0–51.0 mm (1.85–2.01 in)

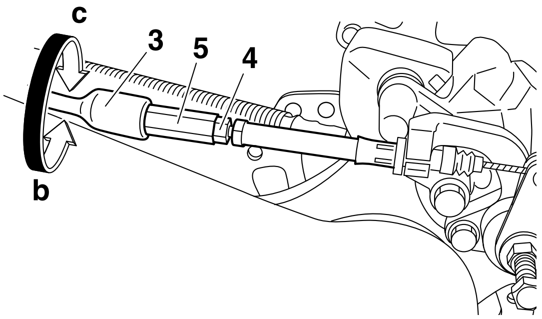

e. Tighten the locknut "4".
f. Slowly turn the adjusting bolt "2" clockwise until resistance is felt.
g. Turn it 1/8 counterclockwise.
h. Tighten the locknut "1".

Locknut
16 Nm (1.6 m·kg, 11 ft·lb)

i. Set the parking brake lever and wait more than 5 minutes.
j. Release the parking brake lever.
k. Slide the rubber cover to its original position.

EWA1S3L010

WARNING

After this adjustment is performed, lift the rear wheels off the ground by placing a block under the engine, and spin the rear wheels to ensure there is no brake drag. If any brake drag is noticed perform the above steps again.

▲▲▲▲▲▲▲▲▲▲▲▲▲▲▲▲▲▲▲▲▲▲▲▲▲▲▲▲▲▲▲▲▲▲

EAS22720

CHECKING THE REAR BRAKE MASTER CYLINDER

1. Check:
   - Brake master cylinder "1"
     Damage/scratches/wear → Replace.
   - Brake fluid delivery passages
     (brake master cylinder body)
     Obstruction → Blow out with compressed air.

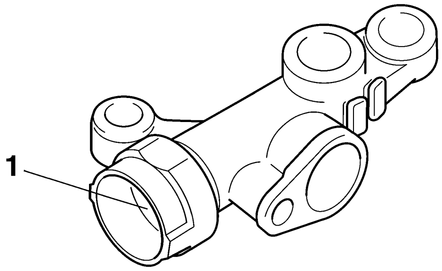

2. Check:
   - Brake master cylinder kit
     Damage/scratches/wear → Replace.

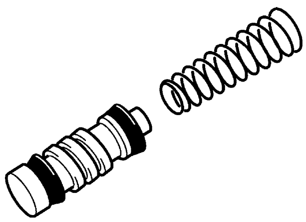

3. Check:
   - Brake fluid reservoir "1"
     Cracks/damage → Replace.
   - Brake fluid reservoir diaphragm "2"
     Cracks/damage → Replace.

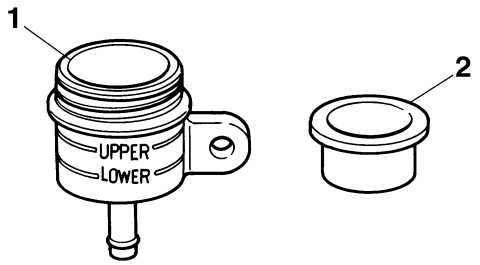

4. Check:
   - Brake hoses
     Cracks/damage/wear → Replace.

EAS22730
ASSEMBLING THE REAR BRAKE MASTER CYLINDER

EWA1S3L011
WARNING

- **Before installation, all internal brake components should be cleaned and lubricated with clean or new brake fluid.**
- **Never use solvents on internal brake components.**
- **Whenever a master cylinder is disassembled, replace the brake master cylinder kit.**

	Specified brake fluid DOT 4

EAS22740
INSTALLING THE REAR BRAKE MASTER CYLINDER

1. Install:
   - Copper washers New
   - Brake hoses "1"
   - Union bolt "2"

	Brake hose union bolt 30 Nm (3.0 m·kg, 22 ft·lb)

EWA13530
WARNING

Proper brake hose routing is essential to insure safe vehicle operation. Refer to "CABLE ROUTING" on page 2-41.

ECA1S3L013
NOTICE

When installing the brake hose onto the brake master cylinder, make sure the brake pipe is installed between the projections "a" and "b" as shown.

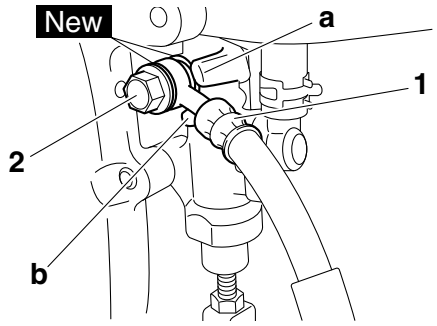

2. Fill:
   - Brake fluid reservoir
     (to the maximum level mark)

	Specified brake fluid DOT 4

EWA13090
WARNING

- **Use only the designated brake fluid. Other brake fluids may cause the rubber seals to deteriorate, causing leakage and poor brake performance.**
- **Refill with the same type of brake fluid that is already in the system. Mixing brake fluids may result in a harmful chemical reaction, leading to poor brake performance.**
- **When refilling, be careful that water does not enter the brake fluid reservoir. Water will significantly lower the boiling point of the brake fluid and could cause vapor lock.**

ECA13540
NOTICE

Brake fluid may damage painted surfaces and plastic parts. Therefore, always clean up any spilt brake fluid immediately.

3. Bleed:
   - Brake system
     Refer to "BLEEDING THE HYDRAULIC BRAKE SYSTEM" on page 3-22.
4. Check:
   - Brake fluid level
     Below the minimum level mark → Add the specified brake fluid to the proper level.
     Refer to "CHECKING THE BRAKE FLUID LEVEL" on page 3-19.
5. Adjust:
   - Brake pedal height
     Refer to "ADJUSTING THE REAR DISC BRAKE" on page 3-19.

Brake pedal position (from foot-rest)
15.3 mm (0.60 in)

6. Adjust:
   - Rear brake light operation timing
     Refer to “ADJUSTING THE REAR BRAKE LIGHT SWITCH” on page 3-22.

EAS22840

HANDLEBAR

Removing the handlebar

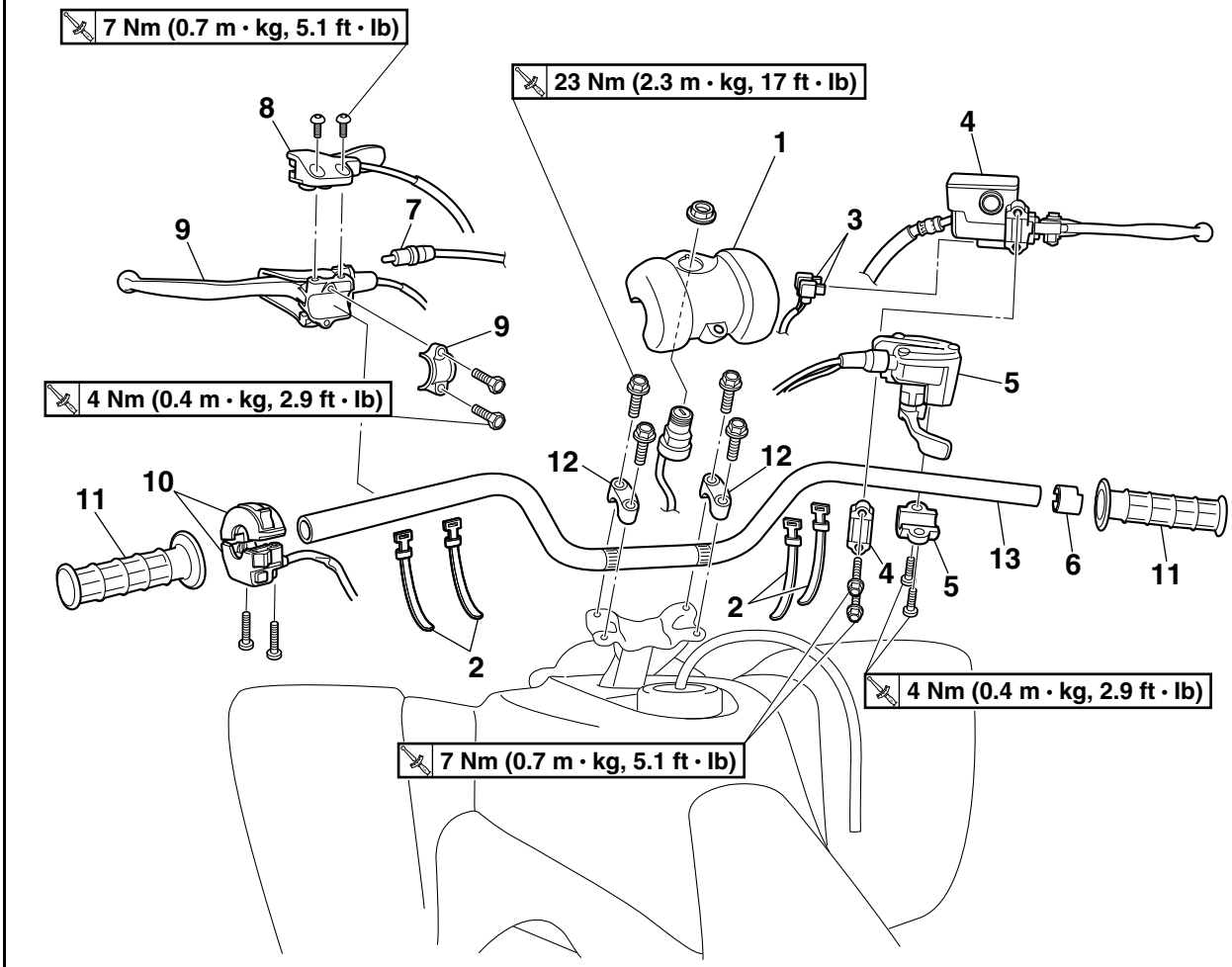

Order	Job/Parts to remove	Q'ty	Remarks
1	Handlebar cover	1	
2	Plastic band	4	
3	Front brake light switch connector	2	
4	Brake master cylinder/holder	1/1	
5	Throttle lever assembly/holder	1/1	
6	Spacer	1	
7	Clutch switch	1	
8	Parking brake lever	1	
9	Clutch lever/bracket	1/1	
10	Handlebar switch	1	
11	Handlebar grip	2	
12	Handlebar holder	2	
13	Handlebar	1	
			For installation, reverse the removal procedure.

EAS1S3L016
REMOVING THE CLUTCH SWITCH
1. Remove:
   - Clutch switch “1”

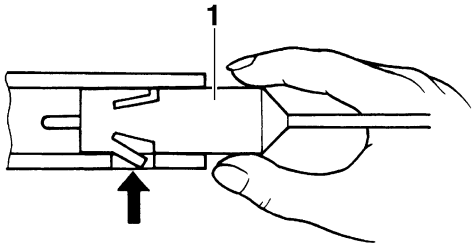

TIP

Push the fastener when removing the clutch switch out of the clutch lever holder.

EAS22860
REMOVING THE HANDLEBAR
1. Place the vehicle on a level surface.
2. Remove:
   - Handlebar grips “1”

TIP

Blow compressed air between the handlebar and the handlebar grip, and gradually push the grip off the handlebar.

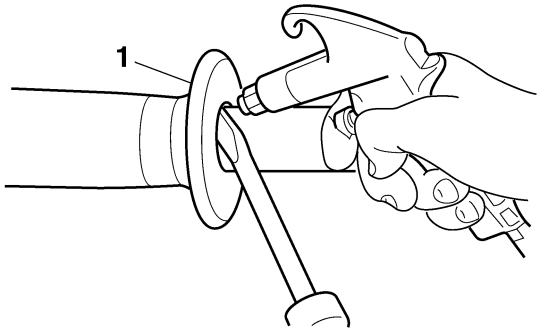

EAS22880
CHECKING THE HANDLEBAR
1. Check:
   - Handlebar “1”
     Bends/cracks/damage → Replace.

EWA13690
WARNING

Do not attempt to straighten a bent handlebar as this may dangerously weaken it.

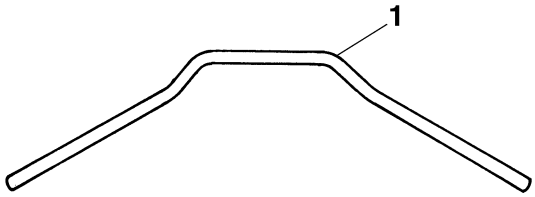

EAS22911
INSTALLING THE HANDLEBAR
1. Place the vehicle on a level surface.
2. Install:
   - Handlebar
   - Upper handlebar holders

	**Upper handlebar holder bolt 23 Nm (2.3 m·kg, 17 ft·lb)**

ECA1S3L014
NOTICE

- **First, tighten the bolts “1” on the front side of the handlebar holders, and then tighten the bolts “2” on the rear side.**
- **Turn the handlebar all the way to the left and right. If there is any contact with the fuel tank, adjust the handlebar position.**

TIP

- Install the handlebar within 3.3° from the horizontal line shown in the illustration.
- The upper handlebar holders should be installed with the punch mark “a” facing forward “A”.

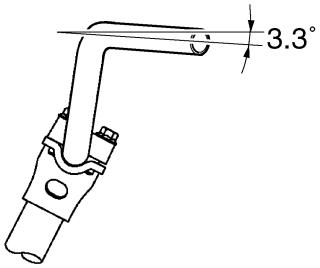

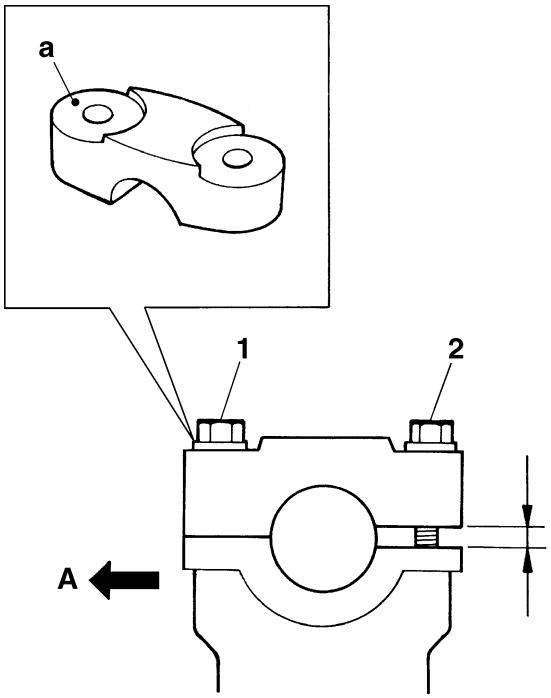

3. Install:
   - Handlebar grip “1”

▼▼▼▼▼▼▼▼▼▼▼▼▼▼▼▼▼▼▼▼▼▼▼▼▼▼▼▼▼▼▼▼▼▼

a. Wipe off grease or oil on the handlebar surface “a” with a lacquer thinner.
b. Apply a thin coat of rubber adhesive onto the left and right ends of the handlebar.
c. Install the handlebar grips to the handlebar so that arrow mark “L” faces up on the left handlebar grip and the arrow mark “R” faces up on the right handlebar.
d. Wipe off any excess rubber adhesive with a clean rag.

EWA13700

WARNING

Do not touch the handlebar grip until the rubber adhesive has fully dried.

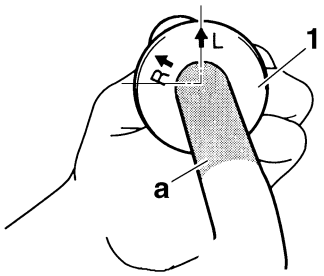

▲▲▲▲▲▲▲▲▲▲▲▲▲▲▲▲▲▲▲▲▲▲▲▲▲▲▲▲▲▲▲▲▲▲

4. Install:
   - Handlebar switch “1”
   - Clutch lever
   - Clutch lever bracket “2”

TIP

Install the clutch lever bracket as shown.

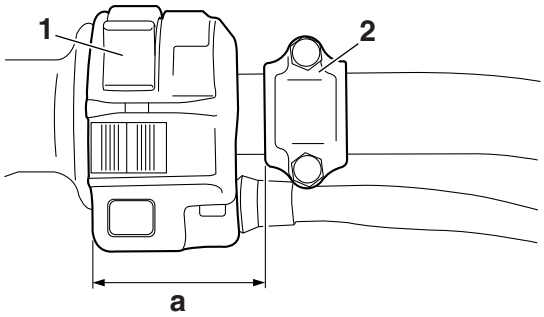

a. 53–54 mm (2.09–2.13 in)

5. Install:
   - Brake master cylinder “1”

	**Brake master cylinder bracket bolt** **7 Nm (0.7 m·kg, 5.1 ft·lb)**

TIP

- Install the brake master cylinder holder with the “UP” mark facing up.
- First, tighten the upper bolt, then the lower bolt.

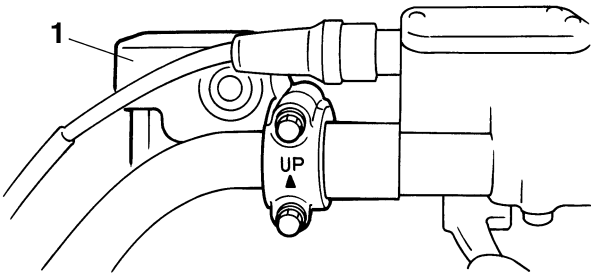

6. Install:
   - Spacer
   - Throttle lever assembly

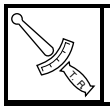	**Throttle lever holder screw** **4 Nm (0.4 m·kg, 2.9 ft·lb)**

TIP

Fit the indentations “a” in the spacer with the lobes “b” on the throttle lever assembly and brake master cylinder.

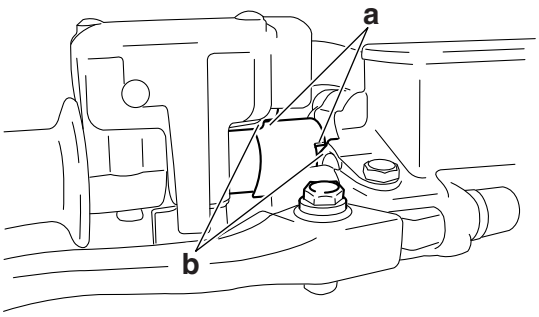

7. Install:
   - Clutch cable
8. Connect:
   - Clutch switch coupler

TIP

Lubricate the end of the clutch cable with a thin coat of lithium-soap-based grease.

9. Adjust:
   - Clutch cable free play
     Refer to "ADJUSTING THE CLUTCH LEVER FREE PLAY" on page 3-12.

	Clutch lever free play (lever end) **8.0–13.0 mm (0.31–0.51 in)**

10. Adjust:
    - Throttle lever free play
      Refer to "ADJUSTING THE THROTTLE LEVER FREE PLAY" on page 3-6.

	Throttle lever free play **2.0–4.0 mm (0.08–0.16 in)**

EAS29540

STEERING STEM

Removing the steering stem

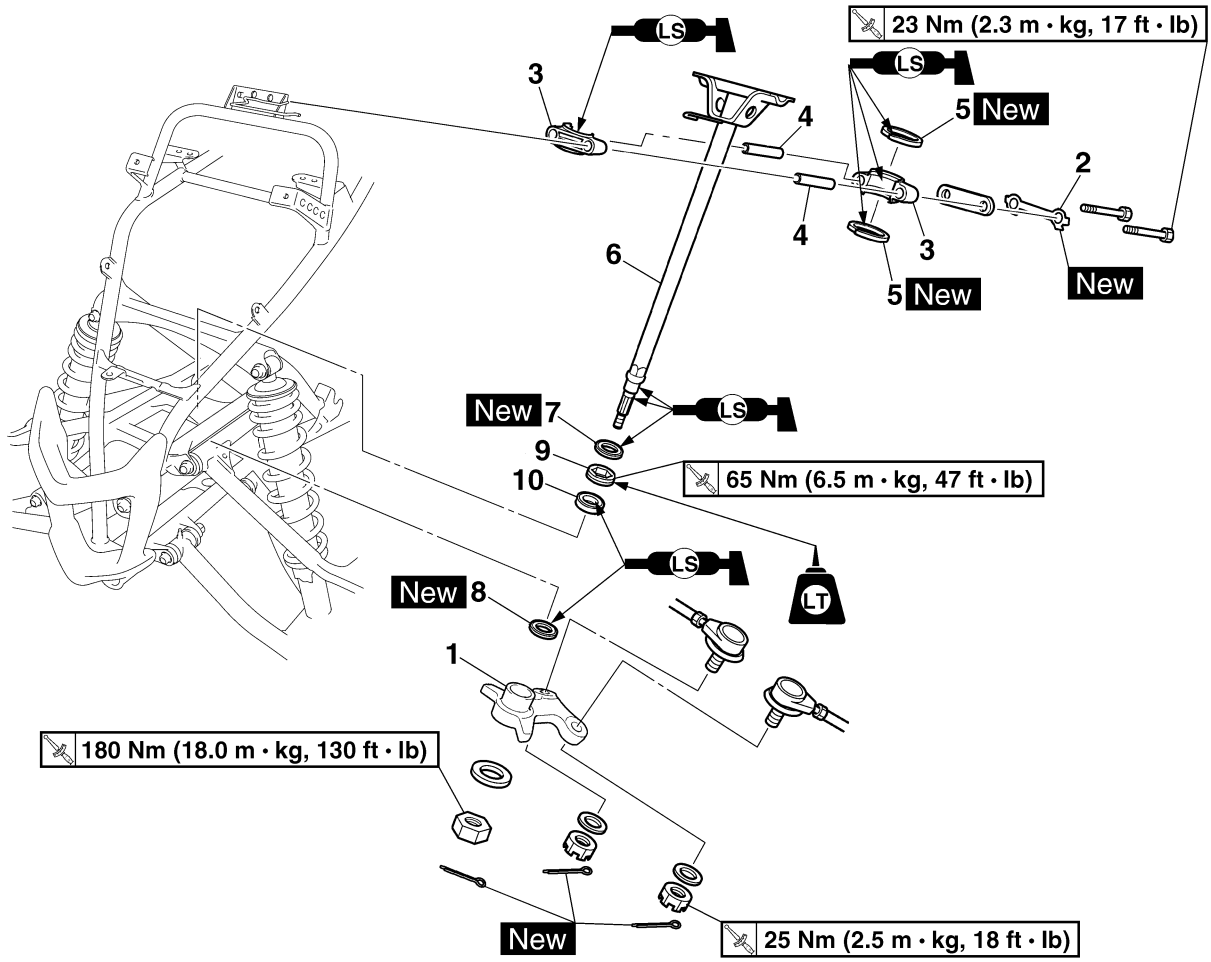

Order	Job/Parts to remove	Q'ty	Remarks
	Front fender/fuel tank		Refer to "GENERAL CHASSIS" on page 4-1.
1	Pitman arm	1	
2	Lock washer	1	
3	Steering stem bushing	2	
4	Spacer	2	
5	Oil seal	2	
6	Steering stem	1	
7	Oil seal	1	
8	Oil seal	1	
9	Bearing retainer	1	
10	Bearing	1	
			For installation, reverse the removal procedure.

EAS29550
REMOVING THE BEARING RETAINER
1. Remove:
   - Bearing retainer

Damper rod holder (30 mm)
90890-01327
Damper rod holder (30 mm)
YM-01327

EAS29560
CHECKING THE STEERING STEM
1. Check:
   - Steering stem "1"
     Bends → Replace.

EWA15030
WARNING

Do not attempt to straighten a bent stem; this may dangerously weaken the stem.

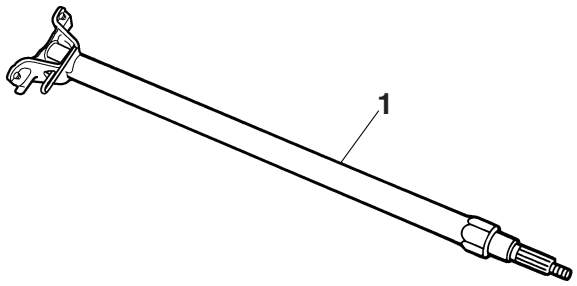

2. Check:
   - Oil seals "1" New
   - Steering stem bushings "2"
     Wear/damage → Replace.

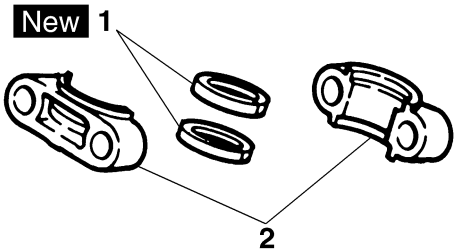

EAS29570
INSTALLING THE BEARING RETAINER
1. Install:
   - Bearing retainer

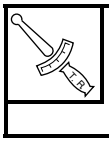

Bearing retainer
65 Nm (6.5 m·kg, 47 ft·lb)
LOCTITE®

Damper rod holder (30 mm)
90890-01327
Damper rod holder (30 mm)
YM-01327

EAS29580
INSTALLING THE LOCK WASHER
1. Install:
   - Lock washer New
   - Steering stem bushing bolts

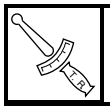

Steering stem bushing bolt
23 Nm (2.3 m·kg, 17 ft·lb)

2. Bend the lock washer tabs along a flat side of the bolts.

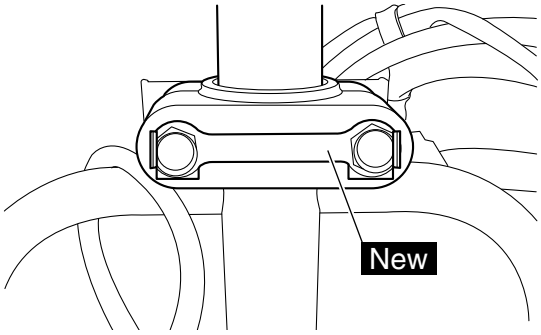

EAS29590
INSTALLING THE PITMAN ARM
1. Install:
   - Pitman arm
   - Washer
   - Pitman arm nut
   - Cotter pin New

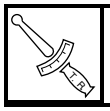

Pitman arm nut
180 Nm (18.0 m·kg, 130 ft·lb)

TIP

Make sure that the threads of the steering stem, washers, nuts, and the installation surfaces of the pitman arm are free of grease and oil.

EAS29660

TIE-RODS AND STEERING KNUCKLES

Removing the tie-rods and steering knuckles

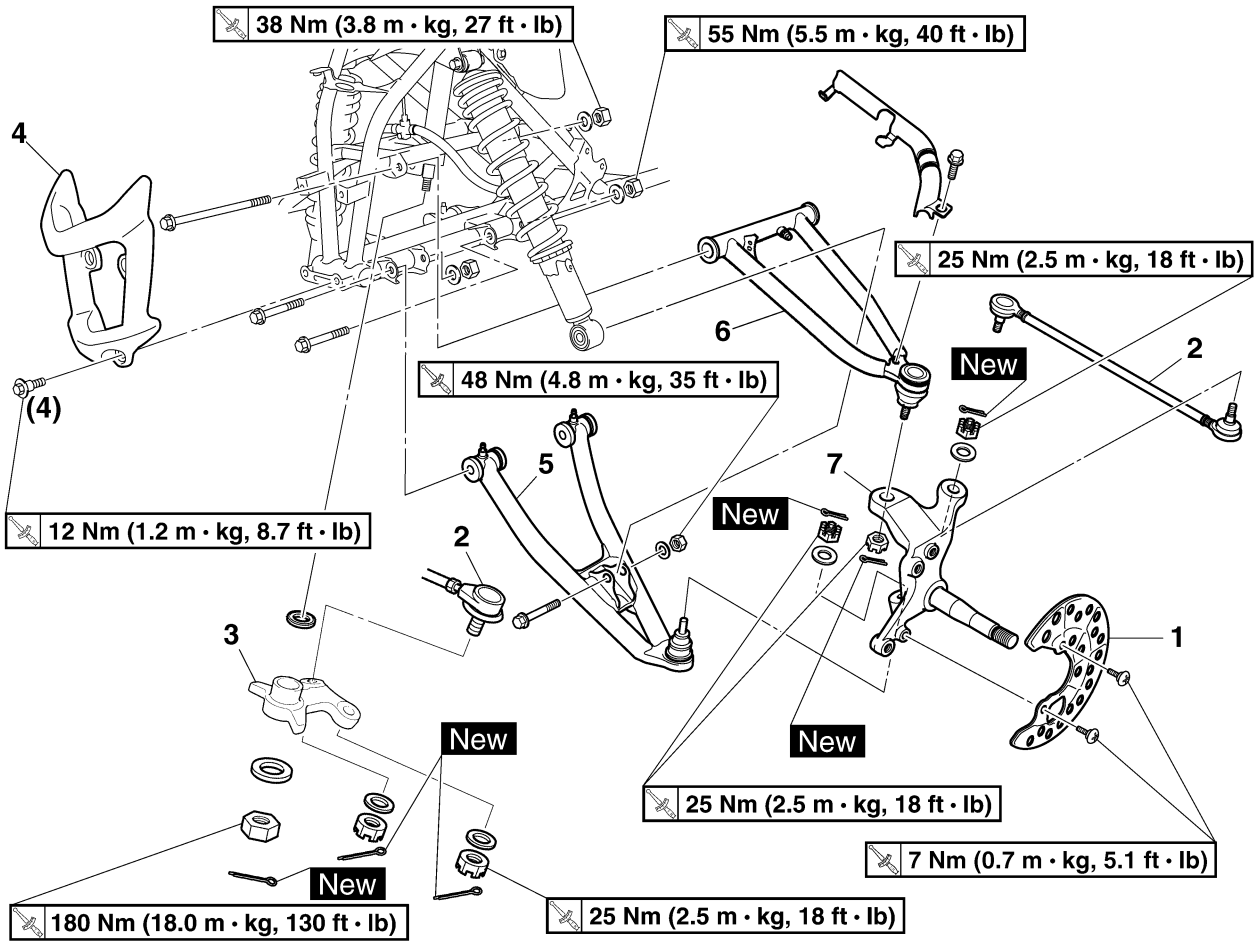

Order	Job/Parts to remove	Q'ty	Remarks
			The following procedure applies to both of the tie-rods and steering knuckles.
	Front wheel/brake disc		Refer to "FRONT WHEELS" on page 4-5.
	Front brake caliper		Refer to "FRONT BRAKES" on page 4-17.
1	Brake disc guard (inner)	1	
2	Tie-rod	2	
3	Pitman arm	1	
4	Front guard	1	
5	Lower front arm	1	
6	Upper front arm	1	
7	Steering knuckle	1	
			For installation, reverse the removal procedure.

EAS29670
REMOVING THE STEERING KNUCKLES
The following procedure applies to both of the steering knuckles.
1. Remove:
   - Steering knuckle “1”

TIP

Use a general puller to separate the ball joints “2” from the steering knuckle “1”.

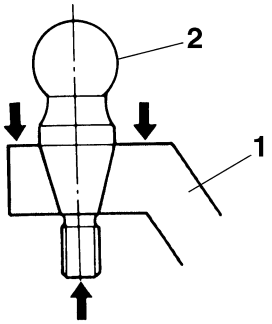

EAS29680
CHECKING THE TIE-RODS
The following procedure applies to both of the tie-rods.
1. Check:
   - Tie-rod movement
     Rough movement → Replace the tie-rod end.
2. Check:
   - Tie-rod
     Bends/damage → Replace.
     Rubber boot damage → Replace the tie-rod end.

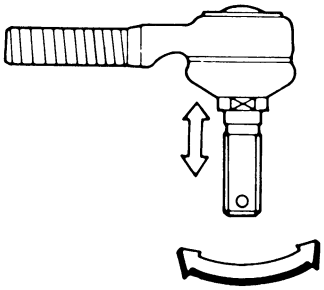

EAS29690
CHECKING THE STEERING KNUCKLES
The following procedure applies to both of the steering knuckles.
1. Check:
   - Steering knuckle
     Damage/pitting → Replace.

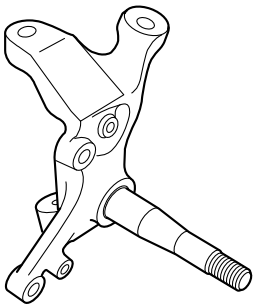

EAS29700
INSTALLING THE TIE-RODS
The following procedure applies to both of the tie-rods.
1. Install:
   - Tie-rod

	**Tie-rod nut** **25 Nm (2.5 m·kg, 18 ft·lb)**

TIP

Install the tie-rod so that the groove “1” is on the wheel side.

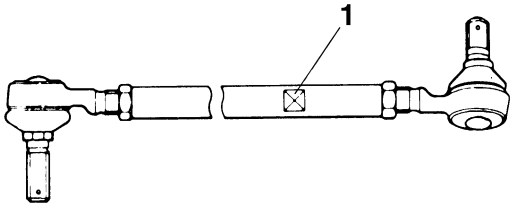

2. Adjust:
   - Toe-in
     Refer to “ADJUSTING THE TOE-IN” on page 3-25.

EAS29710

FRONT ARMS AND FRONT SHOCK ABSORBER ASSEMBLIES

Removing the front arms and front shock absorber assemblies

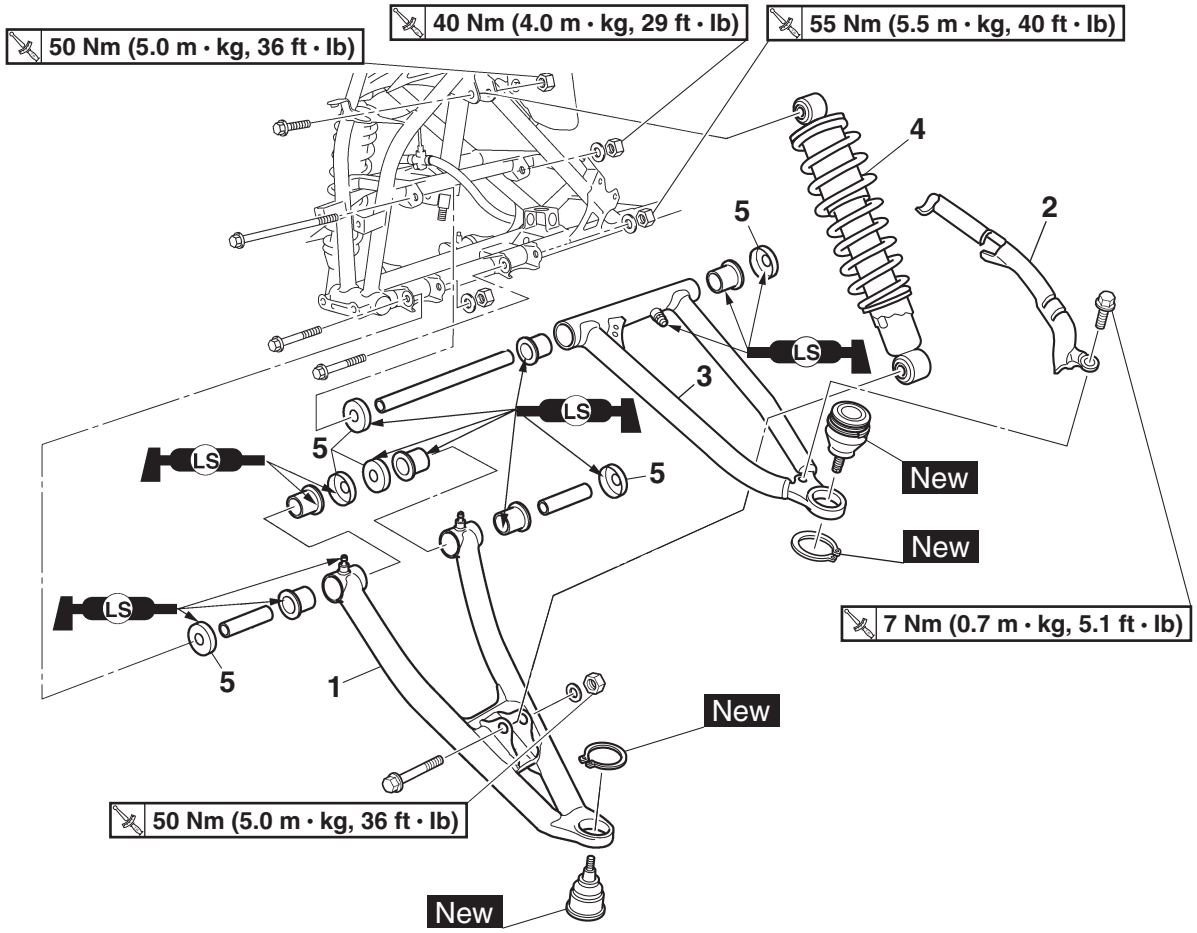

Order	Job/Parts to remove	Q'ty	Remarks
			The following procedure applies to both of the front upper arms, front lower arms, and front shock absorber assemblies.
	Front wheel/brake disc		Refer to "FRONT WHEELS" on page 4-5.
	Front brake caliper		Refer to "FRONT BRAKES" on page 4-17.
	Steering knuckle		Refer to "TIE-RODS AND STEERING KNUCKLES" on page 4-48.
1	Lower front arm	1	
2	Brake hose guide	1	
3	Upper front arm	1	
4	Front shock absorber	1	
5	Dust cover	6	

Removing the front arms and front shock absorber assemblies

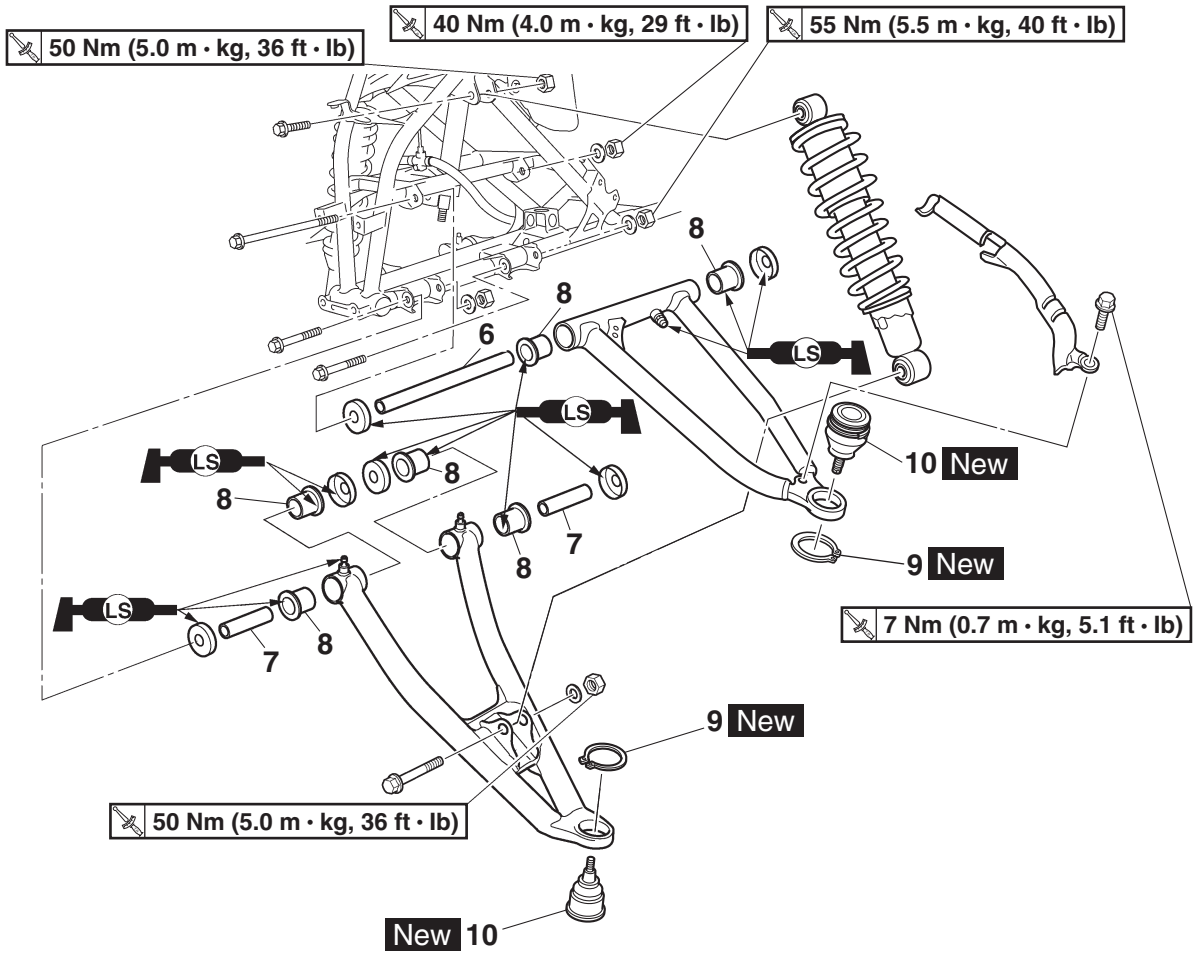

Order	Job/Parts to remove	Q'ty	Remarks
6	Spacer	1	
7	Spacer	2	
8	Bushing	6	
9	Circlip	2	
10	Ball joint assembly	2	
			For installation, reverse the removal procedure.

EAS1PE1002

HANDLING THE FRONT SHOCK ABSORBER ASSEMBLIES (YFM700RSF)

EWA1S3L012

⚠ WARNING

These front shock absorber assemblies contain highly compressed nitrogen gas. Before handling the front shock absorber assemblies, read and make sure you understand the following information. The manufacturer cannot be held responsible for property damage or personal injury that may result from improper handling of the front shock absorber assemblies.

- **Do not tamper or attempt to open the front shock absorber assemblies.**
- **Do not subject the front shock absorber assemblies to an open flame or any other source of high heat. High heat can cause an explosion due to excessive gas pressure.**
- **Do not deform or damage the front shock absorber assemblies in any way. Front shock absorber assembly damage will result in poor damping performance.**

EAS1PE1003

DISPOSING OF A FRONT SHOCK ABSORBER ASSEMBLY (YFM700RSF)

1. Gas pressure must be released before disposing of a front shock absorber assembly. To release the gas pressure, press on the gas valve needle with a suitable tool as shown, until all of the gas is released (the hissing has stopped).

EWA13760

⚠ WARNING

Wear eye protection to prevent eye damage from released gas or metal chips.

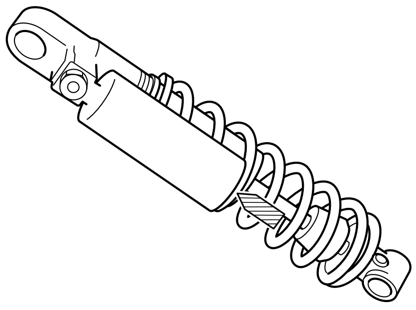

EAS29720

REMOVING THE FRONT ARMS

The following procedure applies to both of the front upper arms and front lower arms.

1. Check:
   - Front arm free play

▼▼▼▼▼▼▼▼▼▼▼▼▼▼▼▼▼▼▼▼▼▼▼▼▼▼▼▼▼▼▼▼▼▼

a. Check the front arm side play “A” by moving it from side to side.
   If side play is noticeable, check the bushings.

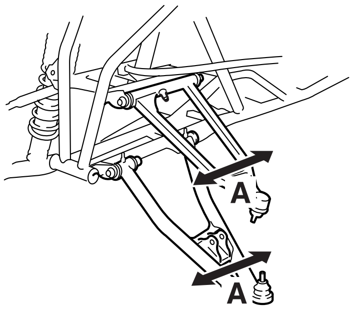

b. Check the front arm vertical movement “B” by moving it up and down.
   If the vertical movement is tight or rough, or if there is binding, check the bushings.

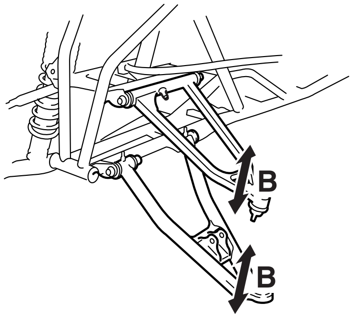

▲▲▲▲▲▲▲▲▲▲▲▲▲▲▲▲▲▲▲▲▲▲▲▲▲▲▲▲▲▲▲▲▲▲

2. Remove:
   - Front arm

EAS29730

CHECKING THE FRONT ARMS

The following procedure applies to both of the front upper arms and front lower arms.

1. Check:
   - Front upper arm “1”
   - Front lower arm “2”
   Bends/damage → Replace.
2. Check:
   - Bushings “3”
   Wear/damage → Replace.

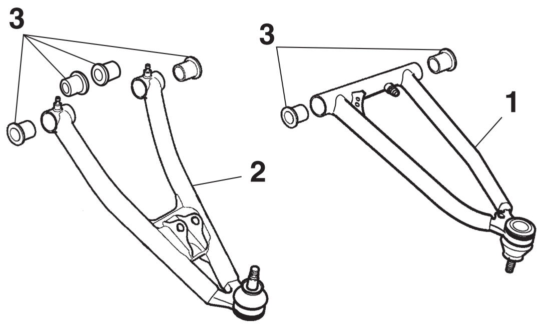

EAS29760

CHECKING THE FRONT SHOCK ABSORBER ASSEMBLIES

The following procedure applies to both of the front shock absorber assemblies.

1. Check:
   - Front shock absorber assembly
     Oil leaks → Replace the front shock absorber assembly.
   - Front shock absorber rod
     Bends/damage → Replace the front shock absorber assembly.
   - Spring
     Move the spring up and down.
     Fatigue → Replace the front shock absorber assembly.
   - Gas cylinder (YFM700RSF)
     Damage/gas leaks → Replace the front shock absorber assembly.

EAS29770

CHECKING THE FRONT ARM BALL JOINTS

The following procedure applies to each of the front arm ball joints.

1. Check:
   - Ball joint “1”
     Damage/pitting → Replace the ball joint assembly.
     Rubber boot damage → Replace the ball joint assembly.
     Rough movement → Replace the ball joint assembly.

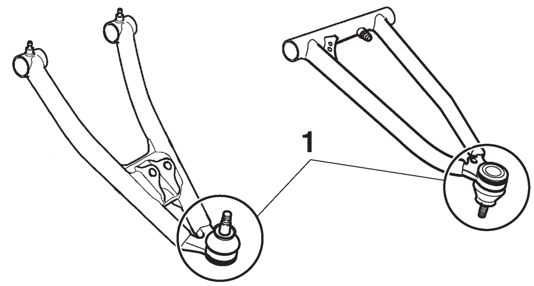

▼▼▼▼▼▼▼▼▼▼▼▼▼▼▼▼▼▼▼▼▼▼▼▼▼▼▼▼▼▼▼▼▼▼▼▼▼▼

a. Clean the surface of the front arm.
b. Remove the circlip “1”.

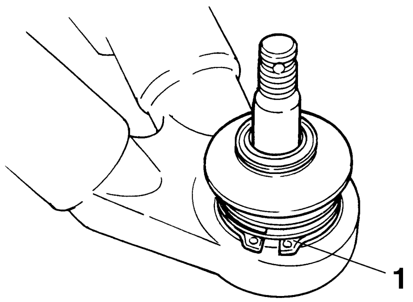

c. Remove the ball joint assembly with the special tools.

Ball joint remover
90890-01474
Ball joint remover
YM-01474
Ball joint remover attachment set
90890-01480
Ball joint adapter set
YM-01480

No.	Tool name	Tool No.
2	Body	90890-01474 YM-01474
3	Long bolt	
4	Base	90890-014804 YM-01480
5	Remover attachment	
6	Installer spacer	
7	Installer washer	

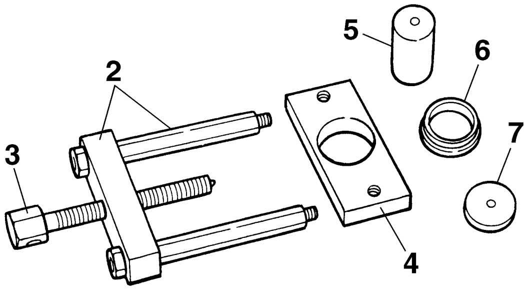

d. Install the body “2”, long bolt “3”, base “4” and remover attachment “5” onto ball joint assembly.
e. Hold the body “2” in place while turning in the long bolt “3” to remove the ball joint “8” from the front arm “9”.

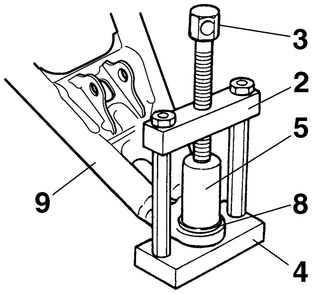

f. Remove the special tools.
g. Install a new ball joint assembly.

TIP

Always use a new ball joint assembly.

h. Attach the assembled special tools, ball joint assembly “10”, installer spacer “6” and installer washer “7” to the front arm “9”.

TIP

- Do not tap or damage the top of the ball joint.
- Installer washer “7” must be aligned with the projection on the head of the ball joint assembly “10”.

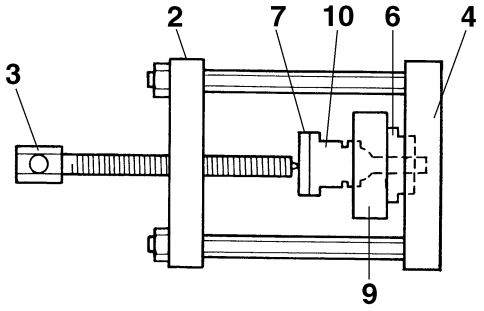

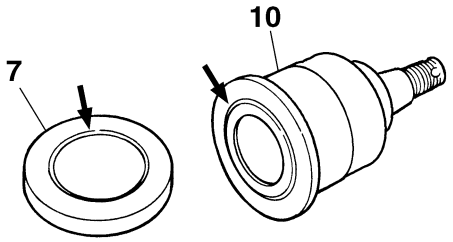

i. Remove the special tools.
j. Install a new circlip.

▲▲▲▲▲▲▲▲▲▲▲▲▲▲▲▲▲▲▲▲▲▲▲▲▲▲▲▲▲▲▲▲

EAS29790

INSTALLING THE FRONT ARMS AND FRONT SHOCK ABSORBER ASSEMBLIES

The following procedure applies to both of the front upper arms, front lower arms, and front shock absorber assemblies.

1. Install:
   - Front upper arm
   - Front lower arm
   - Front shock absorber assembly

▼▼▼▼▼▼▼▼▼▼▼▼▼▼▼▼▼▼▼▼▼▼▼▼▼▼▼▼▼▼▼▼

a. Install the front upper arm “1” and front lower arm “2”.

TIP

- Be sure to position the front upper and lower arm bolts so that the bolt heads face forward.
- Temporarily tighten the front upper and lower arm nuts.
- Apply lithium-soap-based grease to the grease nipple.

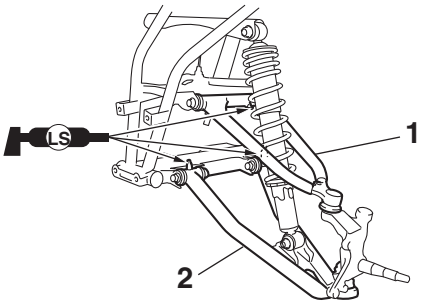

b. Install the front shock absorber assembly.

	**Front shock absorber assembly nut** **48 Nm (4.8 m·kg, 35 ft·lb)**

c. Install the steering knuckle.

	**Upper steering knuckle nut** **25 Nm (2.5 m·kg, 18 ft·lb)** **Lower steering knuckle nut** **25 Nm (2.5 m·kg, 18 ft·lb)**

d. Install the new cotter pins.
e. Tighten the front upper and lower arm nuts to specification.

	**Front upper arm nut** **40 Nm (4.0 m·kg, 29 ft·lb)** **Front lower arm nut** **55 Nm (5.5 m·kg, 40 ft·lb)**

▲▲▲▲▲▲▲▲▲▲▲▲▲▲▲▲▲▲▲▲▲▲▲▲▲▲▲▲▲▲▲▲

EAS1S3L019

REAR SHOCK ABSORBER ASSEMBLY

Removing the rear shock absorber assembly

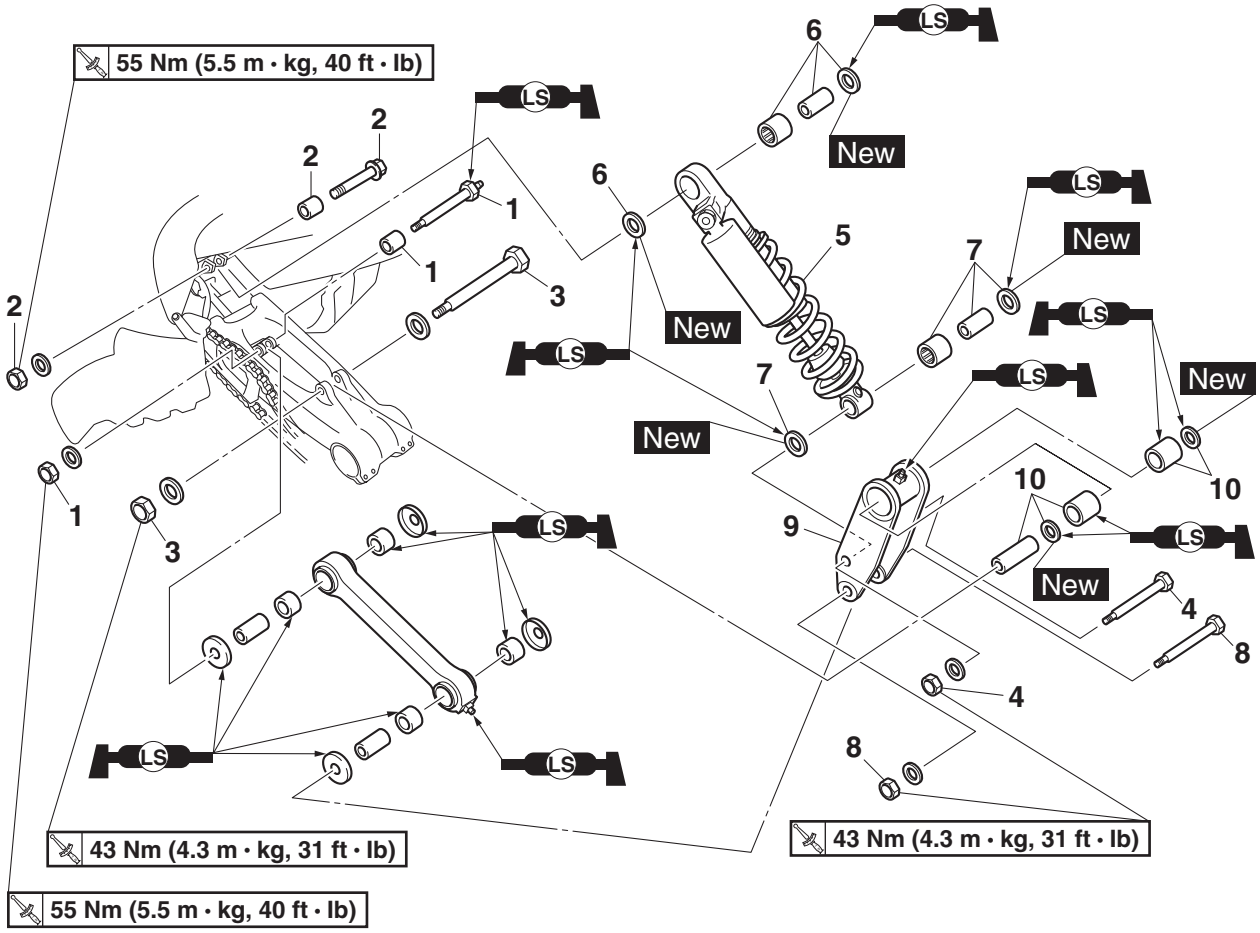

Order	Job/Parts to remove	Q'ty	Remarks
	Rear wheels		Refer to "REAR WHEELS" on page 4-9.
1	Self-locking nut/bolt/spacer	1/1/1	
2	Self-locking nut/bolt/spacer	1/1/1	
3	Self-locking nut/bolt	1/1	
4	Self-locking nut/bolt	1/1	
5	Rear shock absorber assembly	1	
6	Spacer/oil seal/bearing	1/2/1	
7	Spacer/oil seal/bearing	1/2/1	
8	Self-locking nut/bolt	1/1	
9	Relay arm	1	
10	Spacer/oil seal/bushing	1/2/2	

Removing the rear shock absorber assembly

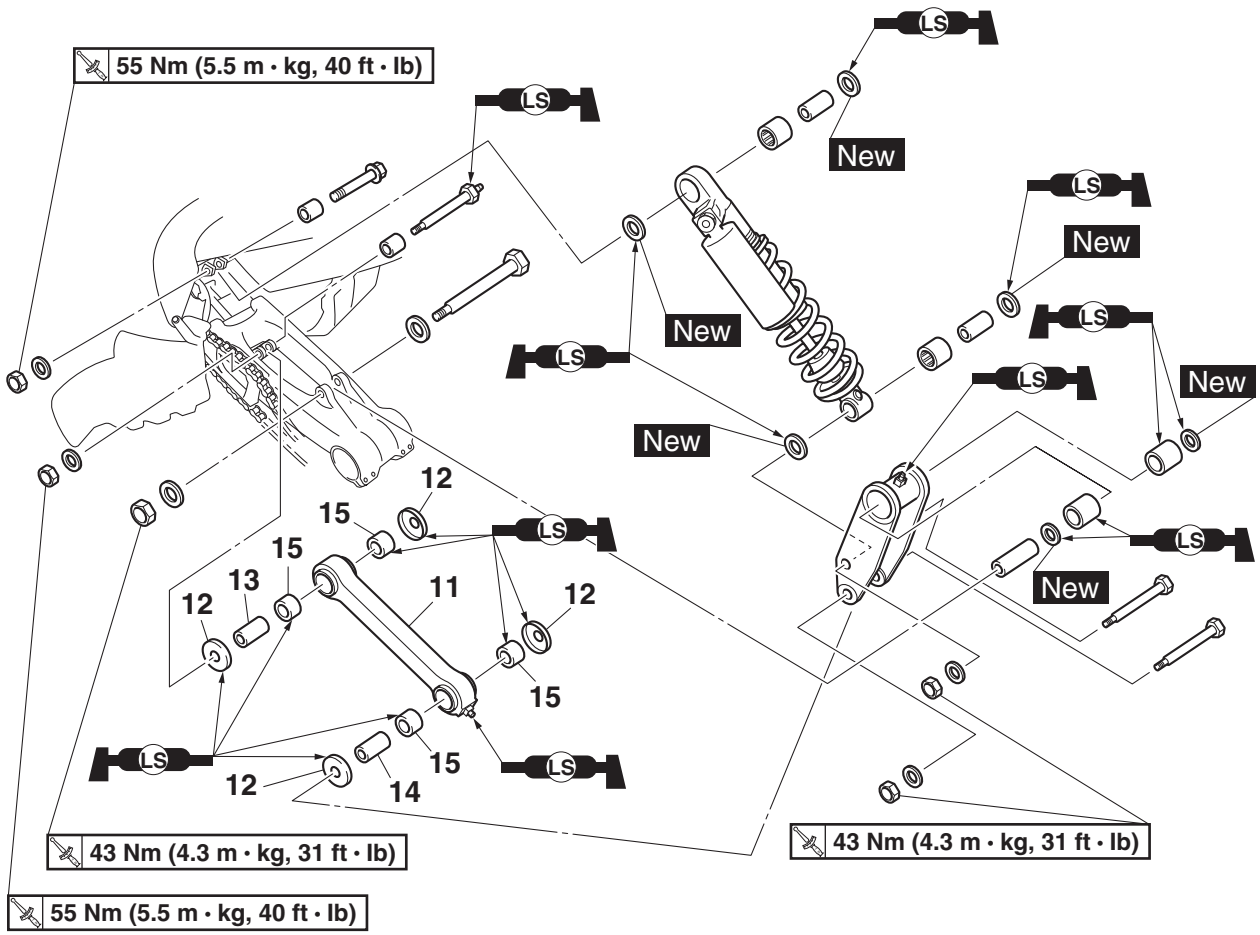

Order	Job/Parts to remove	Q'ty	Remarks
11	Connecting arm	1	
12	Dust cover	4	
13	Spacer	1	
14	Spacer	1	
15	Bushing	4	
			For installation, reverse the removal procedure.

EAS1S3L045

HANDLING THE REAR SHOCK ABSORBER ASSEMBLY

EWA1S3L016

WARNING

This rear shock absorber assembly contains highly compressed nitrogen gas. Before handling the rear shock absorber assembly, read and make sure you understand the following information. The manufacturer cannot be held responsible for property damage or personal injury that may result from improper handling of the rear shock absorber assembly.

- **Do not tamper or attempt to open the rear shock absorber assembly.**
- **Do not subject the rear shock absorber assembly to an open flame or any other source of high heat. High heat can cause an explosion due to excessive gas pressure.**
- **Do not deform or damage the rear shock absorber assembly in any way. Rear shock absorber assembly damage will result in poor damping performance.**

EAS1S3L046

DISPOSING OF A REAR SHOCK ABSORBER ASSEMBLY

1. Gas pressure must be released before disposing of a rear shock absorber assembly. To release the gas pressure, press on the gas valve needle with a suitable tool as shown, until all of the gas is released (the hissing has stopped).

EWA13760

WARNING

Wear eye protection to prevent eye damage from released gas or metal chips.

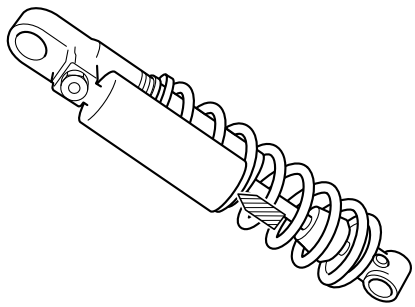

EAS23230

REMOVING THE REAR SHOCK ABSORBER ASSEMBLY

1. Place the vehicle on a level surface.

TIP

Place the vehicle on a suitable stand so that the rear wheels are elevated.

2. Remove:
   - Connecting arm front bolt
   - Rear shock absorber assembly upper bolt
   - Relay arm upper bolt
   - Rear shock absorber assembly lower bolt

TIP

While removing the rear shock absorber assembly upper bolt, hold the swingarm so that it does not drop down.

EAS1S3L020

CHECKING THE RELAY ARM AND CONNECTING ARM

1. Check:
   - Connecting arm “1”
   - Relay arm “2”
   Damage/wear → Replace.
2. Check:
   - Bushings
   - Spacers
   - Oil seals
   Damage/pitting/scratches → Replace.

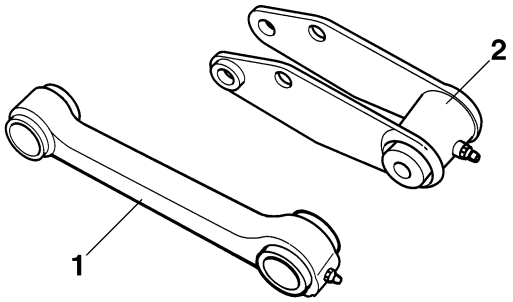

EAS29860

CHECKING THE REAR SHOCK ABSORBER ASSEMBLY

1. Check:
   - Rear shock absorber assembly
   Oil leaks → Replace the rear shock absorber assembly.
   - Rear shock absorber rod
   Bends/damage → Replace the rear shock absorber assembly.
   - Spring
   Move the spring up and down.
   Fatigue → Replace the rear shock absorber assembly.

- Gas cylinder
  Damage/gas leaks → Replace the rear shock absorber assembly.

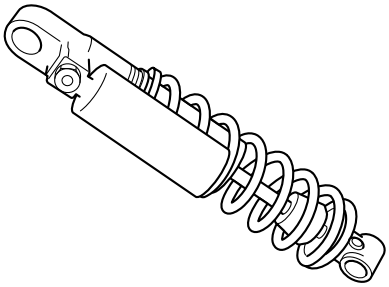

EAS1S3L021

INSTALLING THE REAR SHOCK ABSORBER ASSEMBLY

1. Install:
   - Bushing "1"
     (to connecting arm)

TIP

Apply lithium-soap-based grease on the bushings when installing.

	Installed depth of bushing "a" **1.0 mm (0.04 in)**

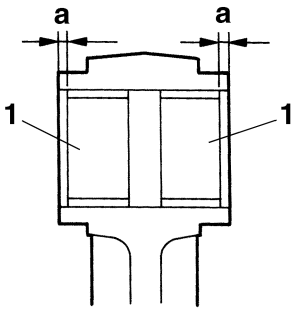

2. Install:
   - Bushing "1"
   - Oil seal "2" New
     (to relay arm)

TIP

Apply lithium-soap-based grease on the bushings when installing.

	Installed depth of bushing "a" **6.5 mm (0.26 in)**

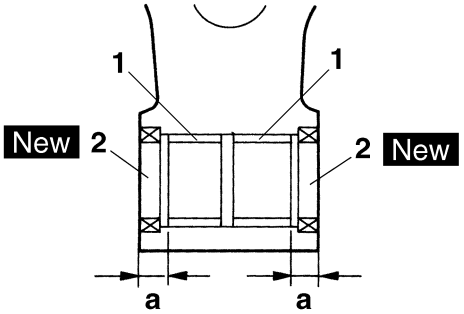

3. Install:
   - Connecting arm
   - Relay arm
   - Rear shock absorber

TIP

When installing the rear shock absorber, lift up the swingarm.

EAS23330

SWINGARM

Removing the swingarm

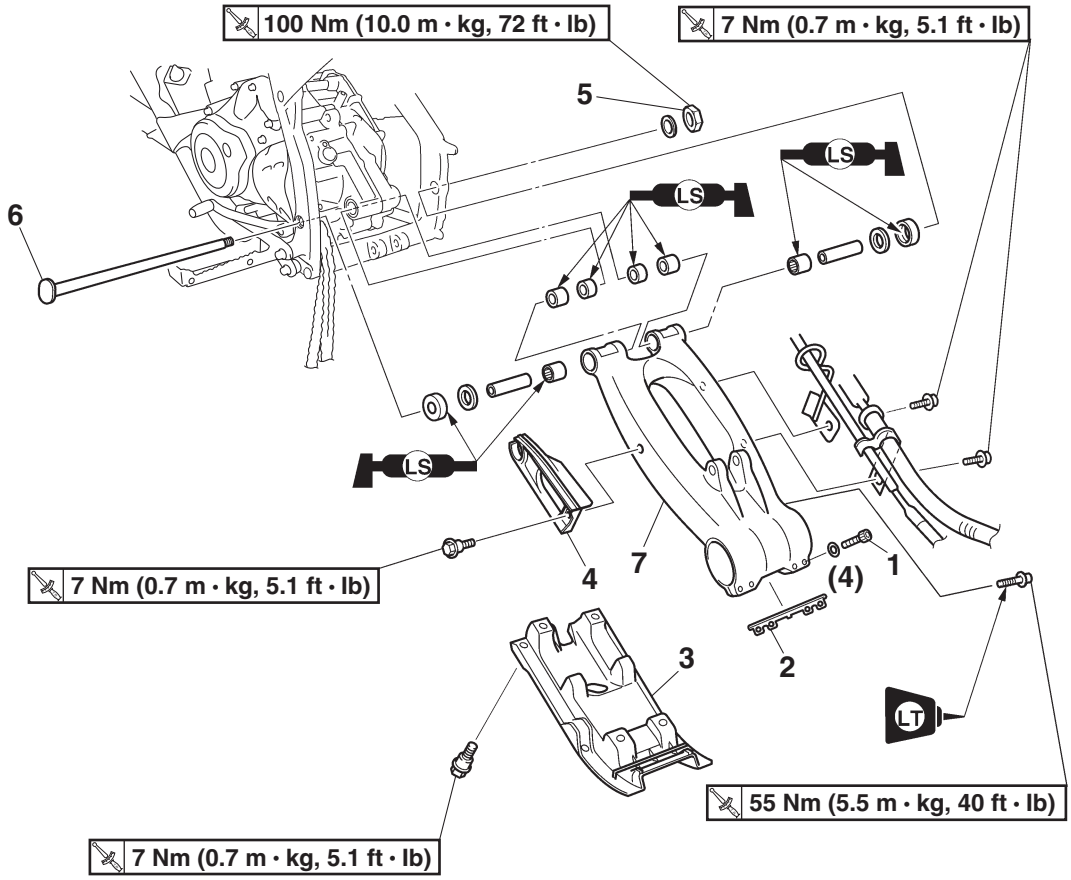

Order	Job/Parts to remove	Q'ty	Remarks
	Rear axle hub		Refer to "REAR AXLE AND REAR AXLE HUB" on page 4-12.
	Rear shock absorber assembly		Refer to "REAR SHOCK ABSORBER ASSEMBLY" on page 4-55.
1	Rear axle pinch bolt	4	
2	Dust seal	1	
3	Swingarm skid plate	1	
4	Drive chain guide 1	1	
5	Pivot shaft nut	1	
6	Pivot shaft	1	
7	Swingarm	1	

Removing the swingarm

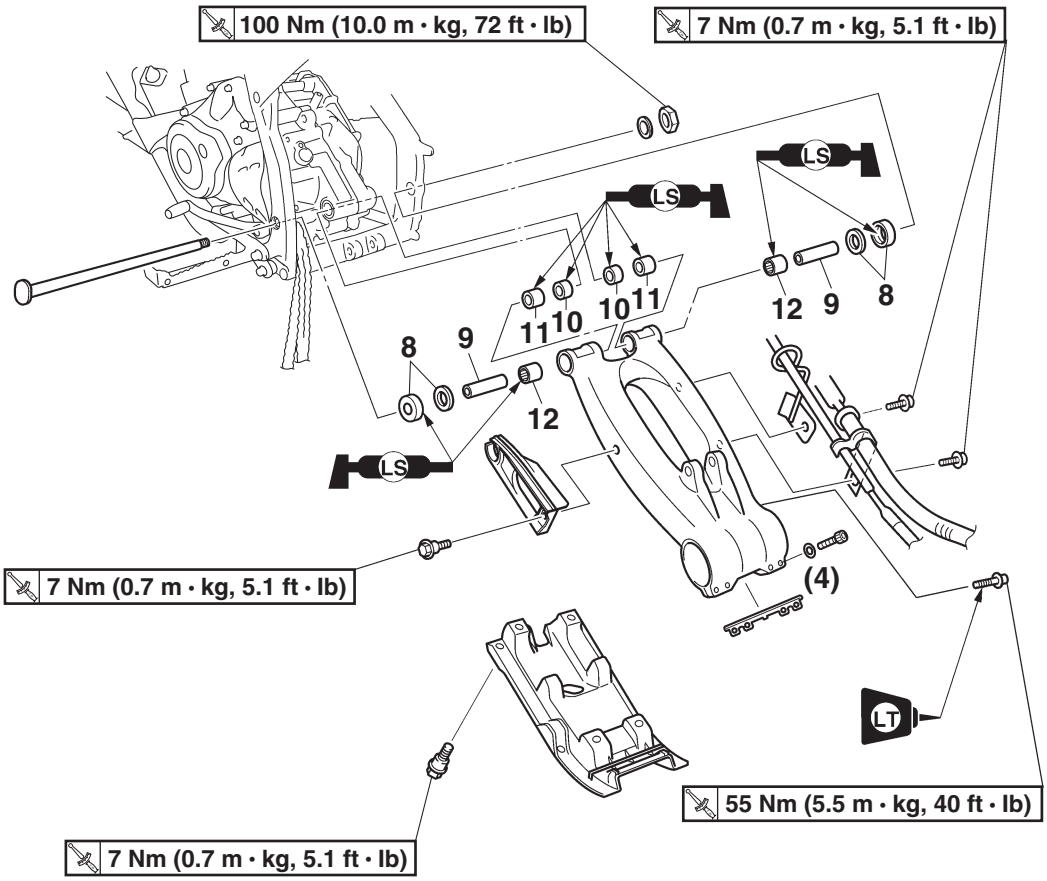

Order	Job/Parts to remove	Q'ty	Remarks
8	Dust cover/washer	2/2	
9	Spacer	2	
10	Oil seal	2	
11	Bushing	2	
12	Bearing	2	
			For installation, reverse the removal procedure.

EAS23350

REMOVING THE SWINGARM

1. Place the vehicle on a level surface.
2. Check:
   - Swingarm side play
   - Swingarm vertical movement

▼▼▼▼▼▼▼▼▼▼▼▼▼▼▼▼▼▼▼▼▼▼▼▼▼▼▼▼▼▼▼▼▼

a. Check the tightening torque of the pivot shaft nut.

Pivot shaft nut
100 Nm (10.0 m·kg, 72 ft·lb)

b. Check the swingarm side play "A" by moving the swingarm from side to side.
If swingarm side play is noticeable, check the spacers, bearings, bushings, and frame pivot.

c. Check the swingarm vertical movement "B" by moving the swingarm up and down.
If swingarm vertical movement is not smooth or if there is binding, check the spacers, bearings, bushings, and frame pivot.

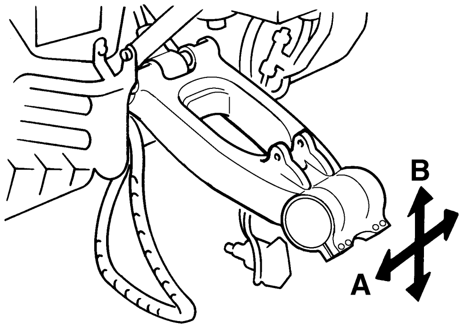

▲▲▲▲▲▲▲▲▲▲▲▲▲▲▲▲▲▲▲▲▲▲▲▲▲▲▲▲▲▲▲▲▲

3. Remove:
   - Pivot shaft nut
   - Washer
   - Pivot shaft
   - Swingarm

EAS23360

CHECKING THE SWINGARM

1. Check:
   - Swingarm
     Bends/cracks/damage → Replace.

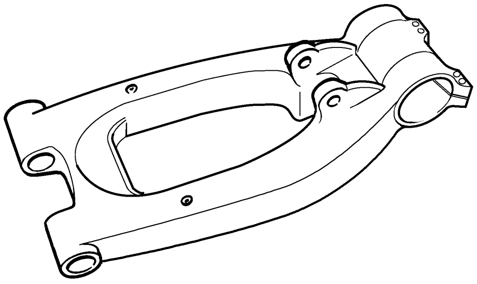

2. Check:
   - Pivot shaft
     Roll the pivot shaft on a flat surface.
     Bends → Replace.

EWA13770

⚠ WARNING

Do not attempt to straighten a bent pivot shaft.

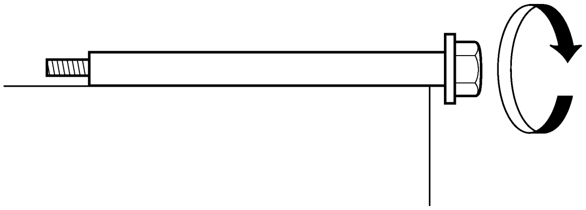

3. Clean:
   - Pivot shaft
   - Spacers
   - Bearings
   - Bushings

Recommended cleaning solvent
Kerosene

4. Check:
   - Dust covers
   - Spacers
   - Oil seals
     Damage/wear → Replace.
   - Bearings
   - Bushings
     Damage/pitting → Replace.

EAS23380

INSTALLING THE SWINGARM

1. Lubricate:
   - Pivot shaft

Recommended lubricant
Lithium-soap-based grease

2. Install:
   - Bearings "1"
   - Bushings "2"
     (to swingarm)

Installed depth of bearing "a"
5 mm (0.20 in)
Installed depth of bushing "b"
9 mm (0.35 in)

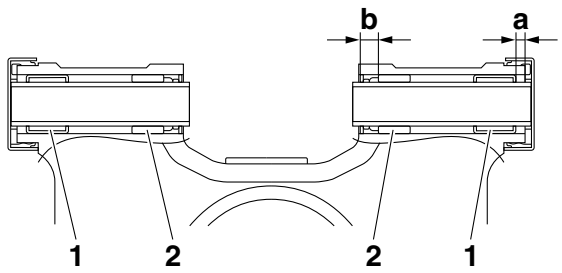

3. Install:
   - Relay arm
   - Rear shock absorber assembly
     Refer to “REAR SHOCK ABSORBER ASSEMBLY” on page 4-55.
4. Install:
   - Rear wheels
     Refer to and “REAR WHEELS” on page 4-9.
5. Adjust:
   - Drive chain slack
     Refer to “ADJUSTING THE DRIVE CHAIN SLACK” on page 3-24.

	Drive chain slack **25.0–35.0 mm (0.98–1.38 in)**

EAS23400

CHAIN DRIVE

Removing the drive chain

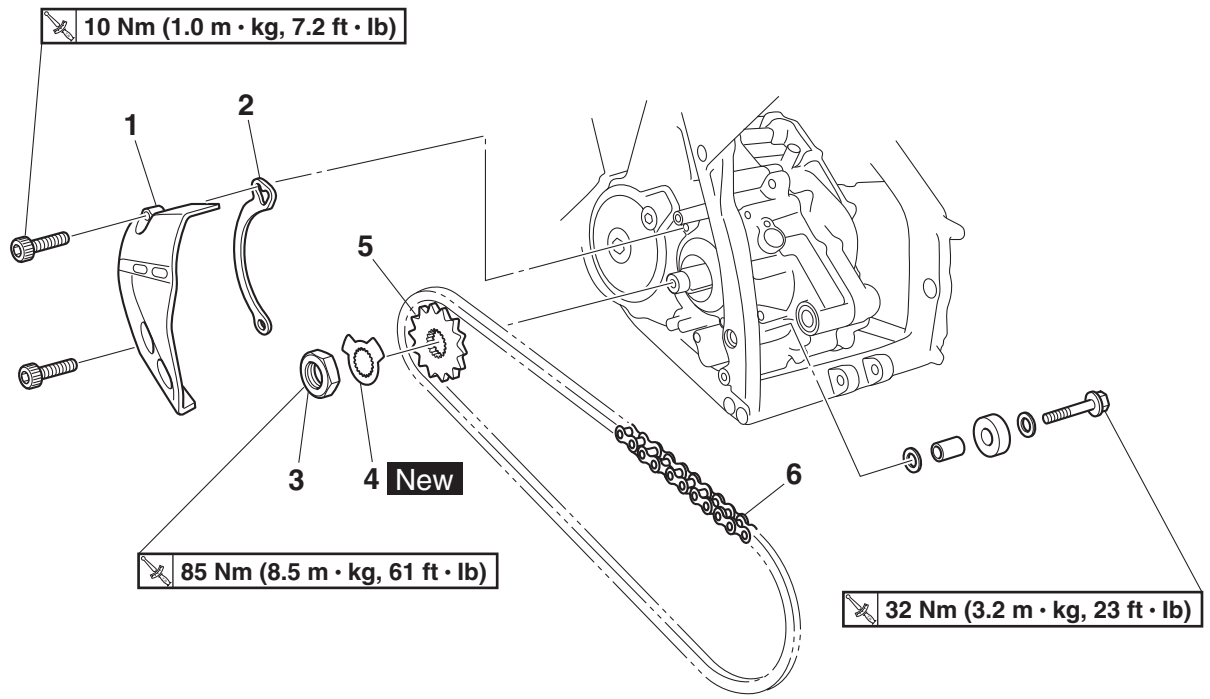

Order	Job/Parts to remove	Q'ty	Remarks
	Swingarm		Refer to "SWINGARM" on page 4-59.
1	Drive sprocket cover	1	
2	Drive chain guide 2	1	
3	Drive sprocket nut	1	
4	Lock washer	1	
5	Drive sprocket	1	
6	Drive chain	1	
			For installation, reverse the removal procedure.

EAS23441
CHECKING THE DRIVE CHAIN

1. Measure:
   - 15-link section of the drive chain
     Out of specification → Replace the drive chain.

	**15-link length limit** **239.3 mm (9.42 in)**

▼▼▼▼▼▼▼▼▼▼▼▼▼▼▼▼▼▼▼▼▼▼▼▼▼▼▼▼▼▼▼▼▼▼

a. Measure the length “a” between the inner sides of the pins and the length “b” between the outer sides of the pins on a 15-link section of the drive chain as shown in the illustration.

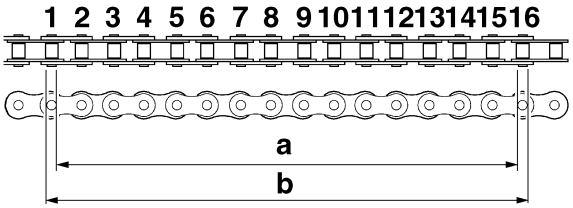

b. Calculate the length “c” of the 15-link section of the drive chain using the following formula.
   Drive chain 15-link section length “c” = (length “a” between pin inner sides + length “b” between pin outer sides)/2

TIP

- When measuring a 15-link section of the drive chain, make sure that the drive chain is taut.
- Perform this procedure 2–3 times, at a different location each time.

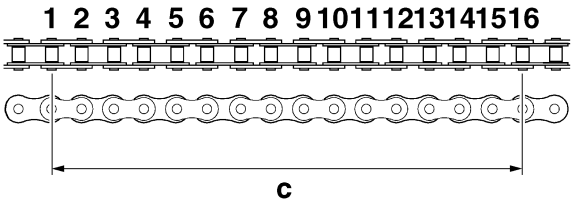

▲▲▲▲▲▲▲▲▲▲▲▲▲▲▲▲▲▲▲▲▲▲▲▲▲▲▲▲▲▲▲▲▲▲

2. Clean:
   - Drive chain

▼▼▼▼▼▼▼▼▼▼▼▼▼▼▼▼▼▼▼▼▼▼▼▼▼▼▼▼▼▼▼▼▼▼

a. Wipe the drive chain with a clean cloth.
b. Put the drive chain in kerosene and remove any remaining dirt.
c. Remove the drive chain from the kerosene and completely dry it.

ECA14290

NOTICE

- **This motorcycle has a drive chain with small rubber O-rings “1” between the drive chain side plates. Never use high-pressure water or air, steam, gasoline, certain solvents (e.g., benzine), or a coarse brush to clean the drive chain. High-pressure methods could force dirt or water into the drive chain’s internals, and solvents will deteriorate the O-rings. A coarse brush can also damage the O-rings. Therefore, use only kerosene to clean the drive chain.**
- **Do not soak the drive chain in kerosene for more than ten minutes, otherwise the O-rings can be damaged.**

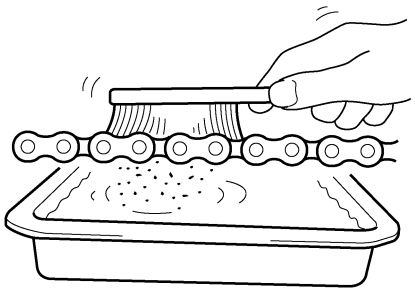

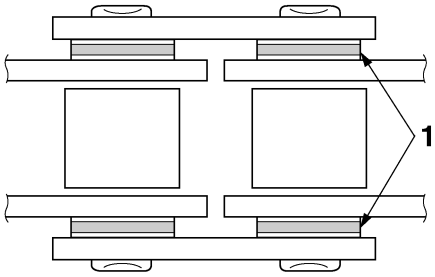

▲▲▲▲▲▲▲▲▲▲▲▲▲▲▲▲▲▲▲▲▲▲▲▲▲▲▲▲▲▲▲▲▲▲

3. Check:
   - O-rings “1”
     Damage → Replace the drive chain.
   - Drive chain rollers “2”
     Damage/wear → Replace the drive chain.
   - Drive chain side plates “3”
     Cracks/damage/wear → Replace the drive chain.

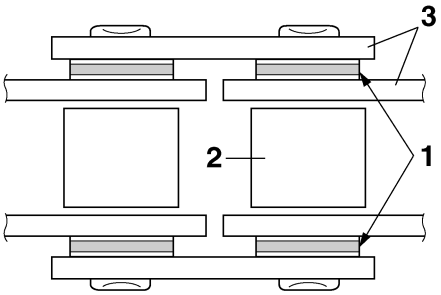

4. Lubricate:
   • Drive chain

	Recommended lubricant **Engine oil or chain lubricant suitable for O-ring chains**

5. Check:
   • Drive sprocket
   • Rear wheel sprocket
   More than 1/4 tooth “a” wear → Replace the drive chain sprockets as a set.
   Bent teeth → Replace the drive chain sprockets as a set.

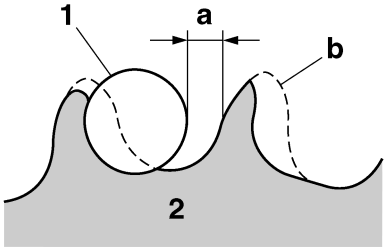

b. Correct
1. Drive chain roller
2. Drive chain sprocket

EAS28800
INSTALLING THE DRIVE CHAIN

1. Lubricate:
   • Drive chain

	Recommended lubricant **Engine oil or chain lubricant suitable for O-ring chains**

2. Install:
   • Drive chain
   • Drive sprocket “1”
   • Lock washer “2” New
   • Drive sprocket nut “3”
   • Drive chain guide

TIP

While applying the rear brake, tighten the drive sprocket nut.

	Drive sprocket nut **85 Nm (8.5 m·kg, 61 ft·lb)**

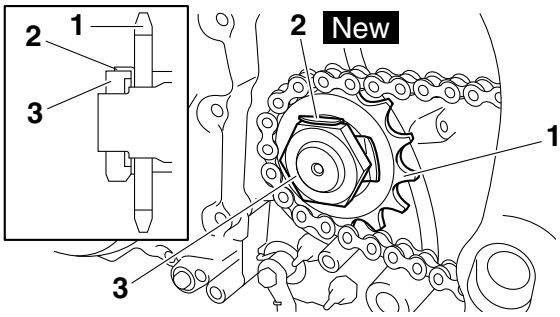

3. Bend the lock washer tab along a flat side of the nut.

ENGINE

EAS23711

ENGINE REMOVAL

Removing the muffler and exhaust pipe

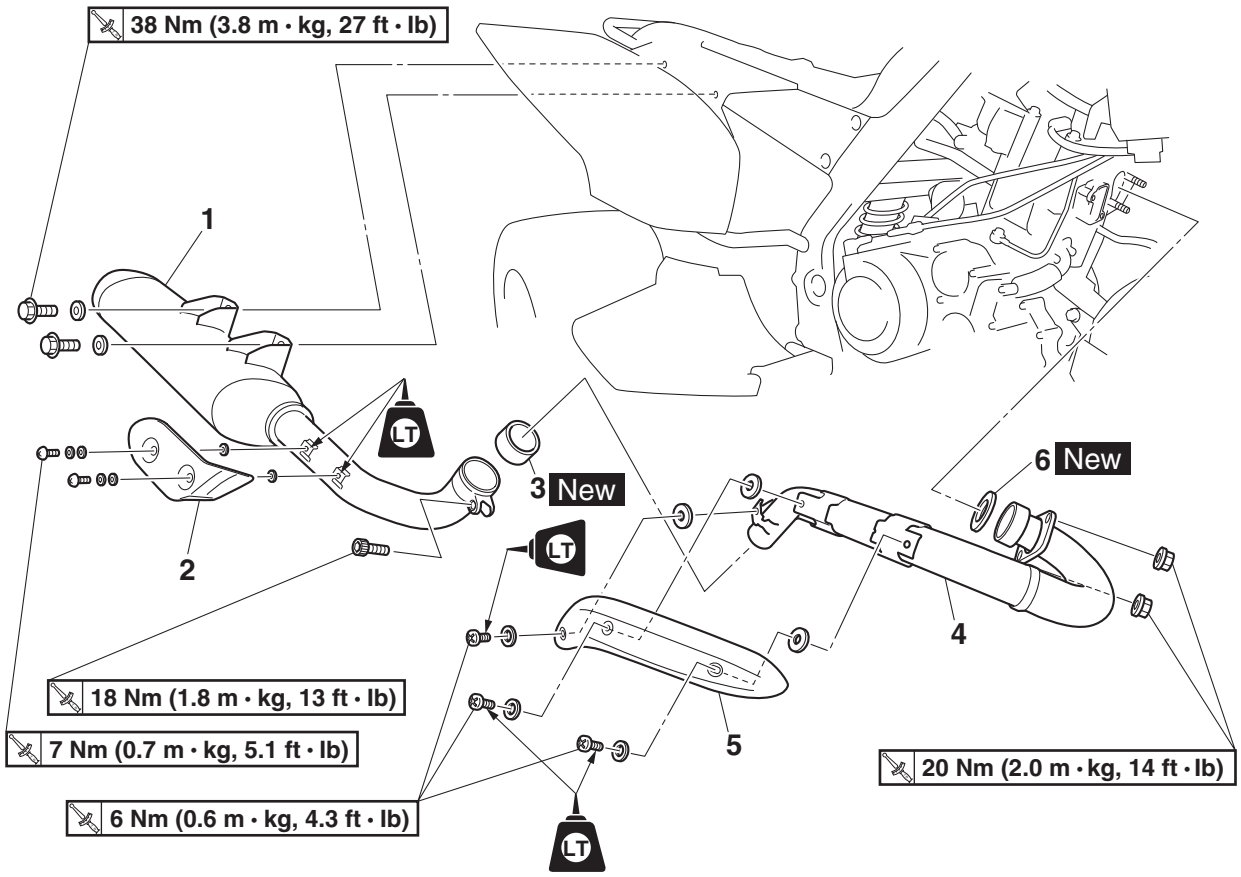

Order	Job/Parts to remove	Q'ty	Remarks
1	Muffler	1	
2	Muffler protector	1	
3	Gasket	1	
4	Exhaust pipe	1	
5	Exhaust pipe protector	1	
6	Gasket	1	
			For installation, reverse the removal procedure.

EAS2LS1003

INSTALLING THE EXHAUST PIPE AND MUFFLER

1. Install:
   - Gasket “1” New
     (to muffler)

TIP

Install the gasket with the chamfer “a”, located on an inner rim of the gasket, and the chamfer “b”, located on an outer rim of the gasket, as shown.

	**Installed depth of gasket “c”** **1.0–1.5 mm (0.04–0.06 in)**

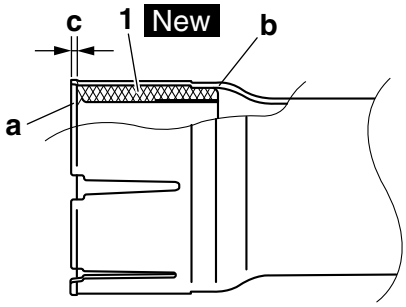

2. Tighten:
   - Muffler bolts “1”
   - Exhaust pipe nuts “2”
   - Muffler and exhaust pipe bolt “3”

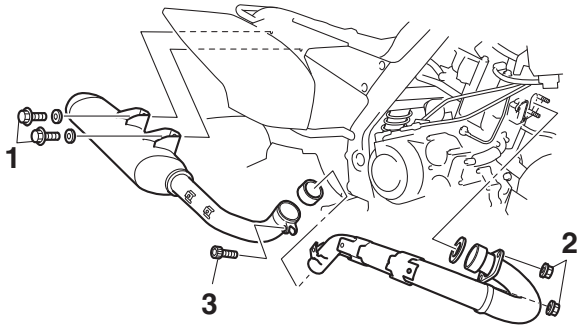

	**Muffler bolt** **38 Nm (3.8 m·kgf, 27 ft·lbf)** **Exhaust pipe nut** **20 Nm (2.0 m·kgf, 14 ft·lbf)** **Muffler and exhaust pipe bolt** **18 Nm (1.8 m·kgf, 13 ft·lbf)**

Removing the oil tank

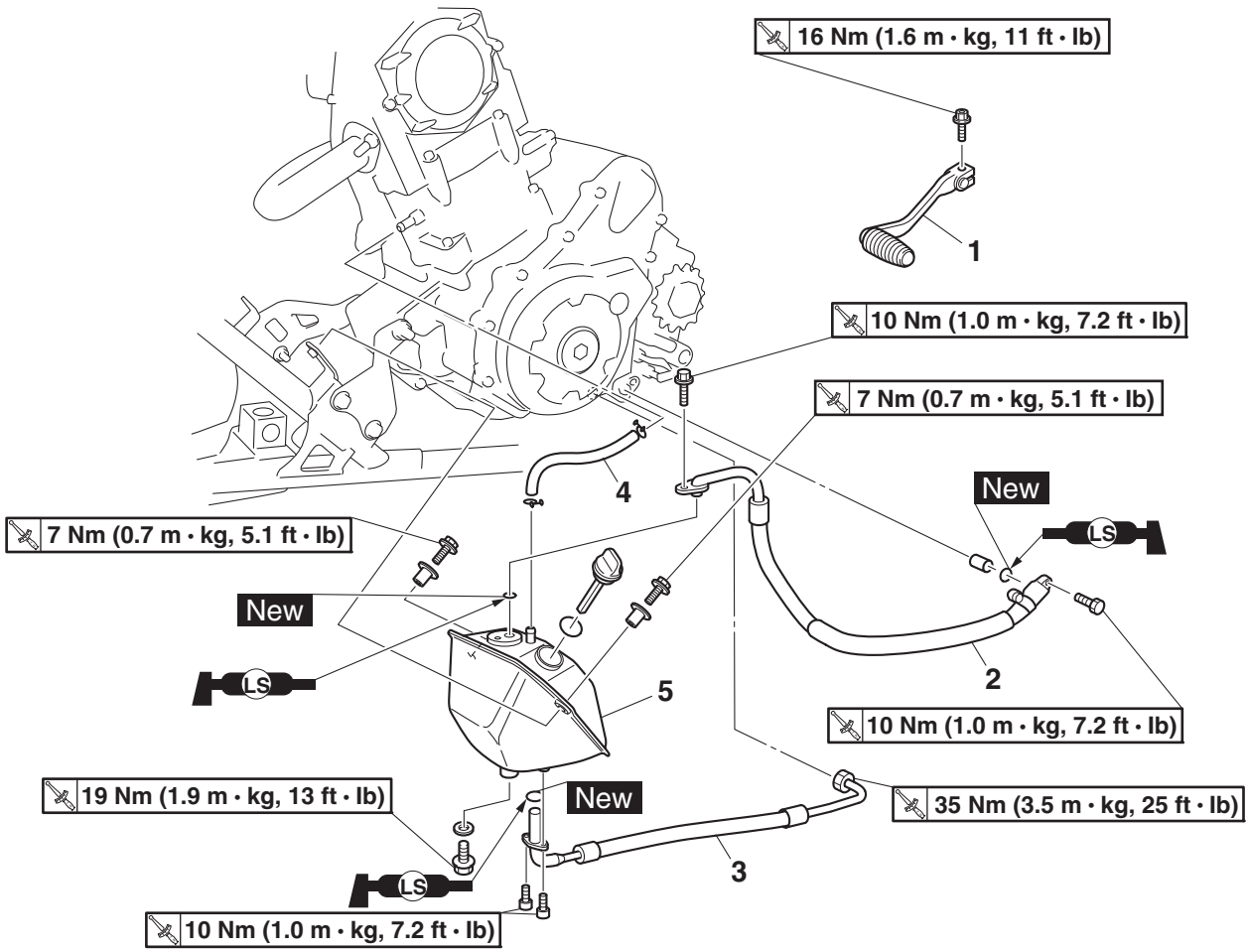

Order	Job/Parts to remove	Q'ty	Remarks
	Engine oil		Drain.
	Engine skid plate		Refer to "GENERAL CHASSIS" on page 4-1.
1	Shift pedal	1	
2	Oil tank inlet hose	1	
3	Oil tank outlet hose	1	
4	Oil tank breather hose	1	
5	Oil tank	1	
			For installation, reverse the removal procedure.

Disconnecting the leads, cables and hoses

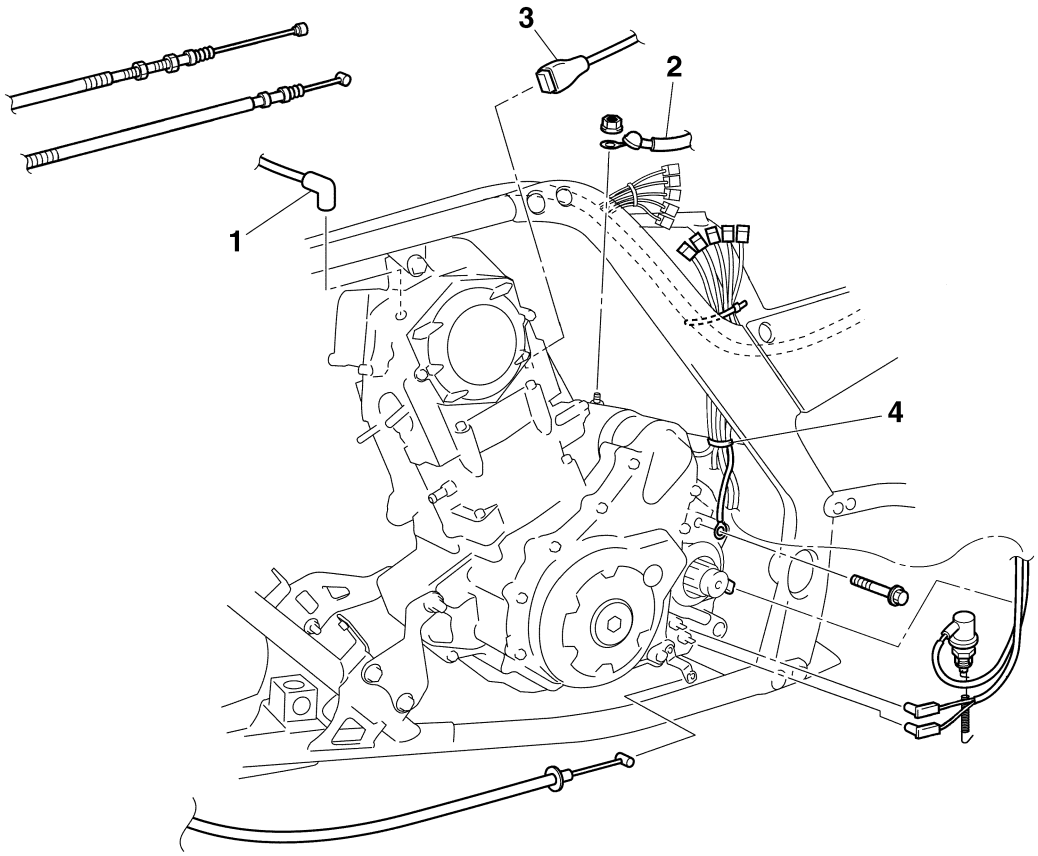

Order	Job/Parts to remove	Q'ty	Remarks
	Coolant		Drain.
	Right foot protector/air filter case/battery/fuel tank		Refer to "GENERAL CHASSIS" on page 4-1.
	Rear brake light switch/right footrest		Refer to "REAR BRAKE" on page 4-28.
	Radiator inlet hose		Refer to "THERMOSTAT" on page 6-3.
	Radiator outlet hose		Refer to "WATER PUMP" on page 6-5.
	Throttle body		Refer to "THROTTLE BODY" on page 7-4.
	Air cut-off valve		Refer to "AIR INDUCTION SYSTEM" on page 7-9.
	Drive sprocket		Refer to "CHAIN DRIVE" on page 4-63.
1	Spark plug cap	1	Disconnect.
2	Starter motor lead	1	Disconnect.
3	Coolant temperature sensor coupler	1	Disconnect.
4	Plastic band	1	

Disconnecting the leads, cables and hoses

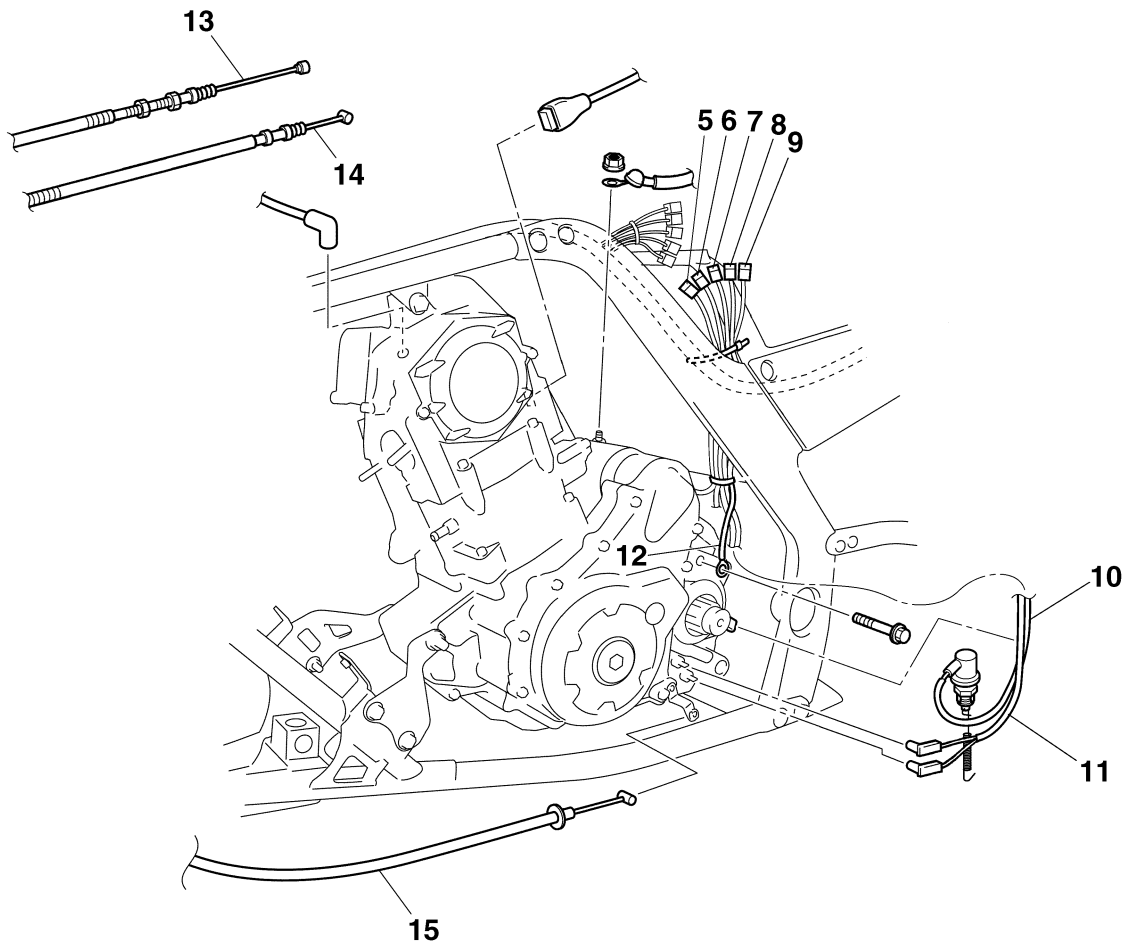

Order	Job/Parts to remove	Q'ty	Remarks
5	Negative battery sub-wire harness coupler	1	Disconnect.
6	Speed sensor coupler	1	Disconnect.
7	AC magneto coupler	1	Disconnect.
8	Crankshaft position sensor coupler	1	Disconnect.
9	Rear brake light switch coupler	1	
10	Rear brake light switch lead	1	
11	Neutral switch and reverse switch sub-wire harness	1	
12	Ground lead	1	
13	Clutch cable	1	Disconnect.
14	Parking brake cable	1	Disconnect.
15	Reverse control cable	1	Disconnect.
			For installation, reverse the removal procedure.

Removing the engine

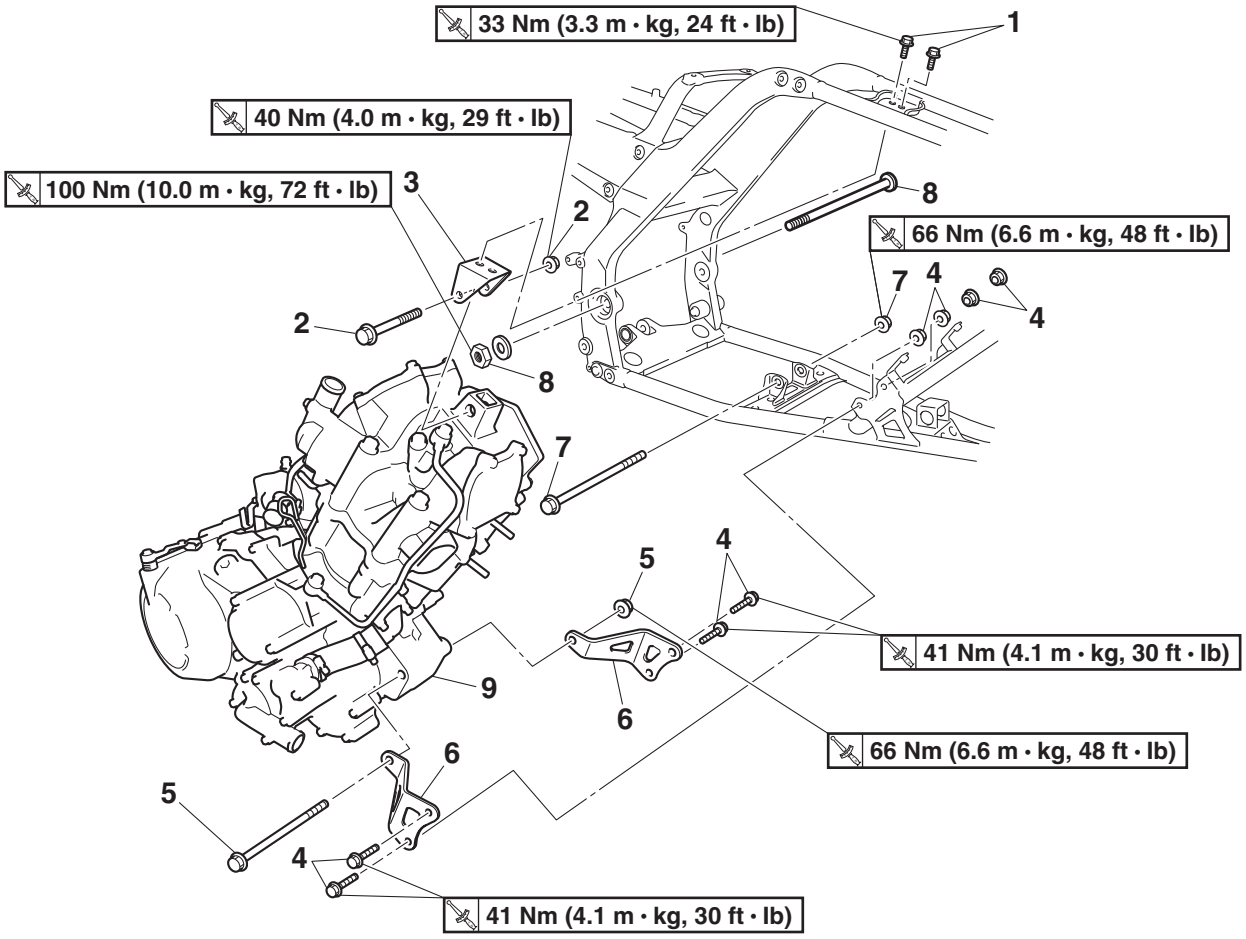

Order	Job/Parts to remove	Q'ty	Remarks
1	Engine upper bracket bolt	2	
2	Engine mounting bolt (upper)/nut	1/1	
3	Engine upper bracket	1	
4	Engine lower bracket bolt/nut	4/4	
5	Engine mounting bolt (middle)/nut	1/1	
6	Engine lower bracket	2	
7	Engine mounting bolt (lower)/nut	1/1	
8	Pivot shaft/pivot shaft nut	1/1	Refer to "REMOVING THE SWINGARM" on page 4-61.
9	Engine assembly	1	**TIP** Remove the engine assembly from the right side of the vehicle.
			For installation, reverse the removal procedure.

EAS23720

INSTALLING THE ENGINE

ECA1S3L015

NOTICE

Install all of the bolts/nuts and then tighten them to full torque specifications.

1. Install:
   - Swingarm
   - Pivot shaft
   - Washer
   - Pivot shaft nut
     Refer to "INSTALLING THE SWINGARM" on page 4-61.

TIP

Do not fully tighten the pivot shaft nut.

2. Install:
   - Engine mounting bolt (lower)/nut
   - Engine lower bracket (left)
   - Engine lower bracket (right)
   - Engine lower bracket bolts/nuts
   - Engine mounting bolt (middle)/nut
   - Engine upper bracket
   - Engine upper bracket bolts
   - Engine mounting bolt (upper)/nut

TIP

Do not fully tighten the bolts and nuts.

3. Tighten:
   - Engine upper bracket bolt "1"
   - Engine upper bracket bolt "2"
   - Engine mounting bolt (upper)/nut "3"
   - Pivot shaft nut "4"
   - Engine mounting bolt (lower)/nut "5"
   - Engine mounting bolt (middle)/nut "6"
   - Engine lower bracket bolts/nuts "7"

TIP

Tighten the bolts and nuts in the proper tightening sequence as shown.

Engine upper bracket bolt "1"
33 Nm (3.3 m·kg, 24 ft·lb)
Engine upper bracket bolt "2"
33 Nm (3.3 m·kg, 24 ft·lb)
Engine mounting bolt (upper)/nut "3"
40 Nm (4.0 m·kg, 29 ft·lb)
Pivot shaft nut "4"
100 Nm (10.0 m·kg, 72 ft·lb)
Engine mounting bolt (lower)/nut "5"
66 Nm (6.6 m·kg, 48 ft·lb)
Engine mounting bolt (middle)/nut "6"
66 Nm (6.6 m·kg, 48 ft·lb)
Engine lower bracket bolts/nuts "7"
41 Nm (4.1 m·kg, 30 ft·lb)

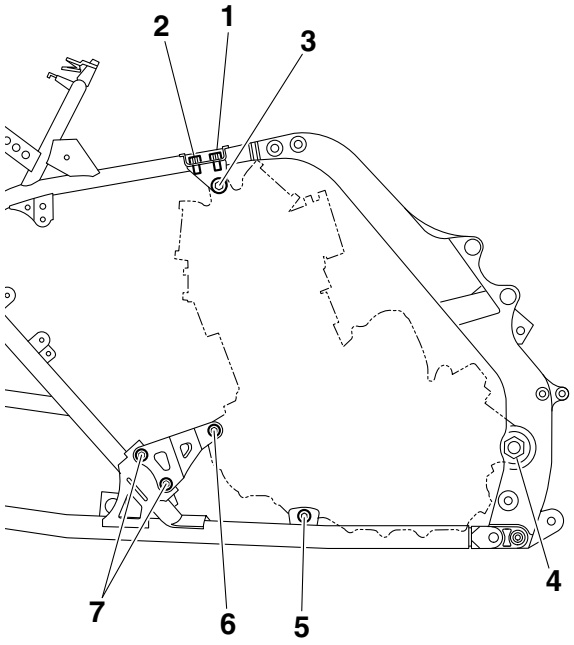

EAS24100

CYLINDER HEAD

Removing the cylinder head

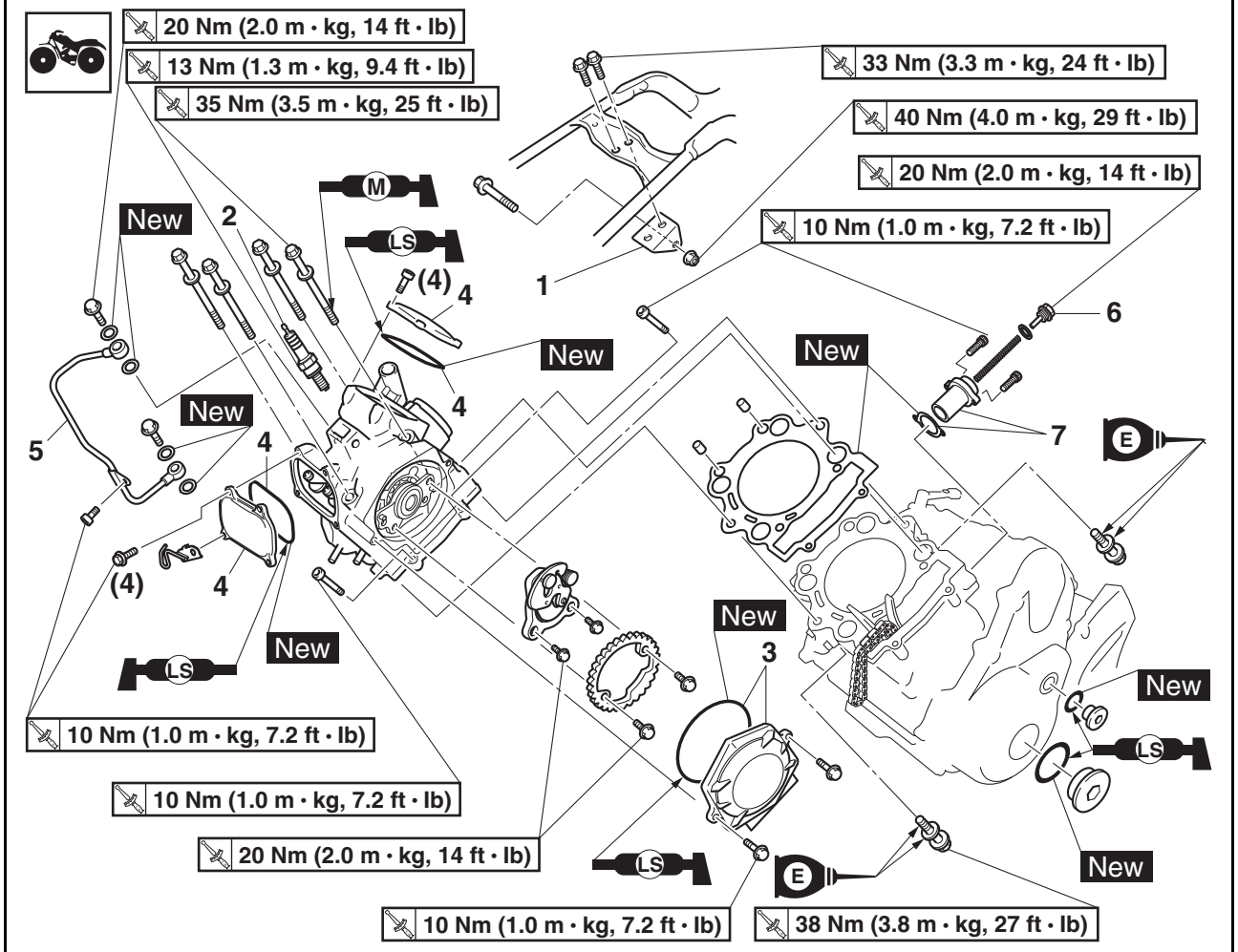

Order	Job/Parts to remove	Q'ty	Remarks
	Throttle body		Refer to "THROTTLE BODY" on page 7-4.
	Reed valve assembly		Refer to "AIR INDUCTION SYSTEM" on page 7-9.
	Thermostat/coolant temperature sensor		Refer to "THERMOSTAT" on page 6-3.
1	Engine upper bracket	1	
2	Spark plug	1	
3	Camshaft sprocket cover/O-ring	1/1	
4	Tappet cover/O-ring	2/2	
5	Oil delivery pipe	1	
6	Timing chain tensioner cap bolt	1	Loosen.
7	Timing chain tensioner/gasket	1/1	

Removing the cylinder head

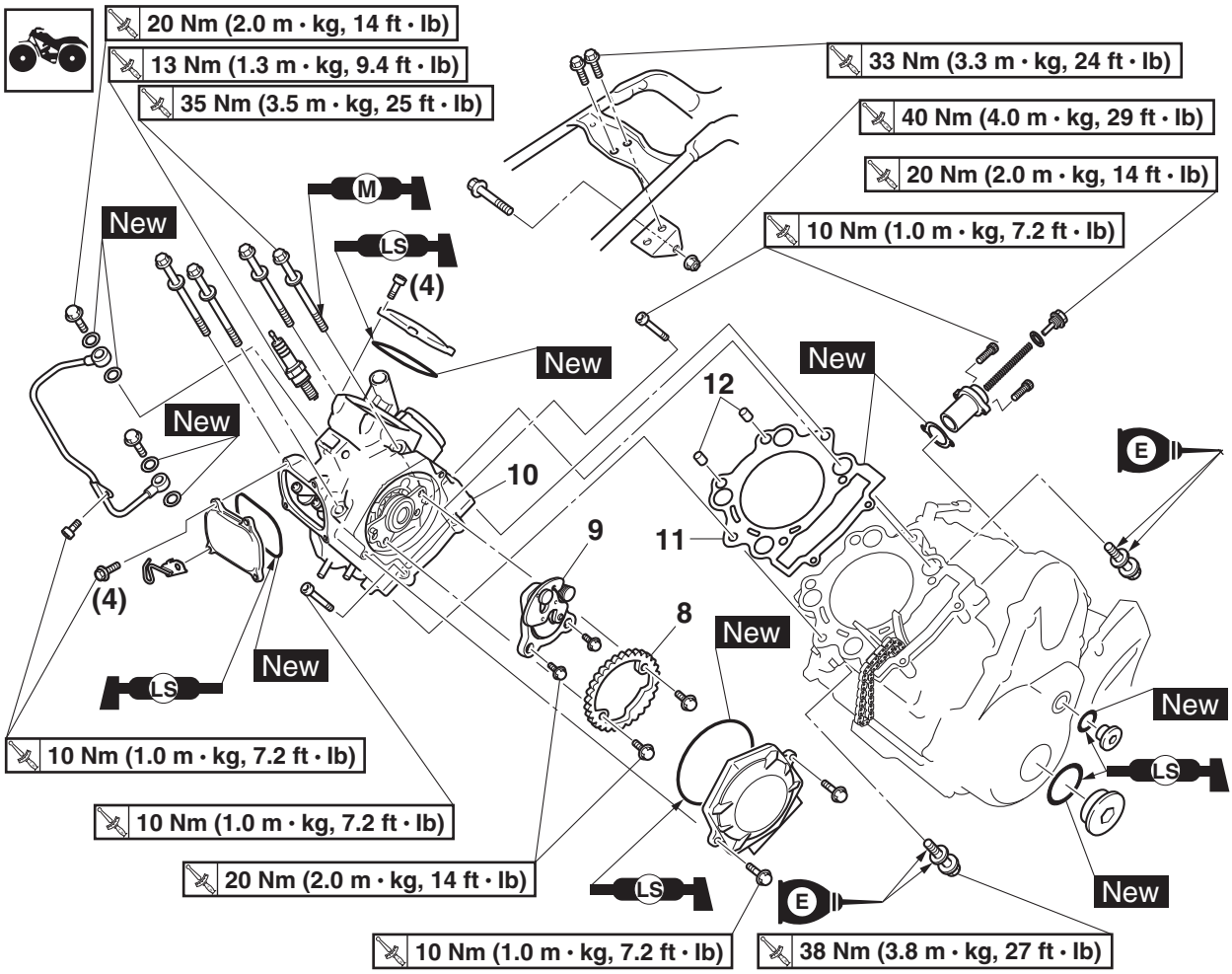

Order	Job/Parts to remove	Q'ty	Remarks
8	Camshaft sprocket	1	
9	Decompressor assembly	1	
10	Cylinder head	1	
11	Cylinder head gasket	1	
12	Dowel pin	2	
			For installation, reverse the removal procedure.

EAS24130

REMOVING THE CYLINDER HEAD

1. Align:
   - "I" mark "a" on the AC magneto rotor (with the stationary pointer "b" on the AC magneto cover)

▼▼▼▼▼▼▼▼▼▼▼▼▼▼▼▼▼▼▼▼▼▼▼▼▼▼▼▼▼▼▼▼▼▼▼▼

a. Turn the crankshaft counterclockwise.

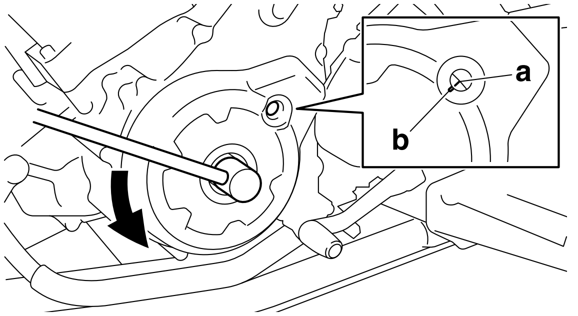

b. When the piston is at TDC on the compression stroke, align the "I" mark "c" on the camshaft sprocket with the mark "d" on the cylinder head.

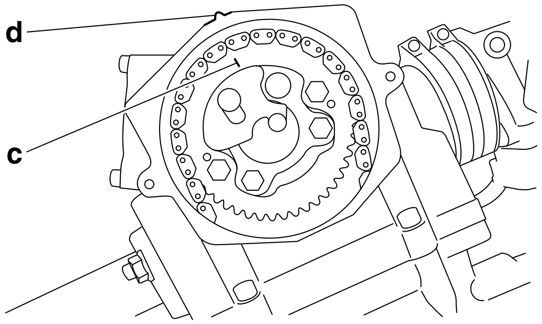

▲▲▲▲▲▲▲▲▲▲▲▲▲▲▲▲▲▲▲▲▲▲▲▲▲▲▲▲▲▲▲▲▲▲▲▲

2. Loosen:
   - Camshaft sprocket bolt "1"

TIP

While holding the AC magneto rotor nut with a wrench, loosen the camshaft sprocket bolt.

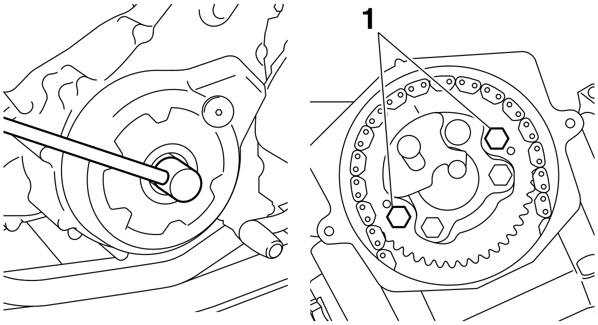

3. Loosen:
   - Timing chain tensioner cap bolt
4. Remove:
   - Timing chain tensioner (along with the gasket)
   - Camshaft sprocket
   - Timing chain

TIP

To prevent the timing chain from falling into the crankcase, fasten it with a wire.

5. Remove:
   - Cylinder head

TIP

- Loosen the nuts in the proper sequence as shown.
- Loosen each nut 1/2 of a turn at a time. After all of the nuts are fully loosened, remove them.

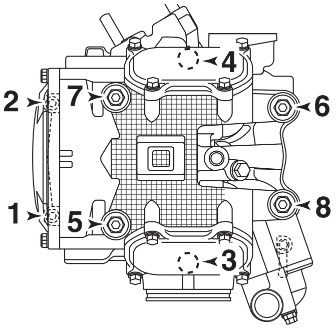

EAS24160

CHECKING THE CYLINDER HEAD

1. Eliminate:
   - Combustion chamber carbon deposits (with a rounded scraper)

ECA1S3L025

NOTICE

Do not use a sharp instrument; otherwise, the following may be damaged or scratched:

- **Spark plug bore threads**
- **Valve seats**

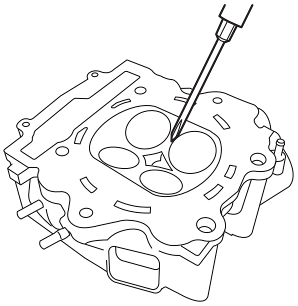

2. Check:
   - Cylinder head
     Damage/scratches → Replace.
   - Cylinder head water jacket
     Mineral deposits/rust → Eliminate.

3. Measure:
   - Cylinder head warpage
     Out of specification → Resurface the cylinder head.

	Warpage limit **0.03 mm (0.0012 in)**

▼▼▼▼▼▼▼▼▼▼▼▼▼▼▼▼▼▼▼▼▼▼▼▼▼▼▼▼▼▼▼▼▼▼▼▼▼▼

a. Place a straightedge “1” and a thickness gauge “2” across the cylinder head.

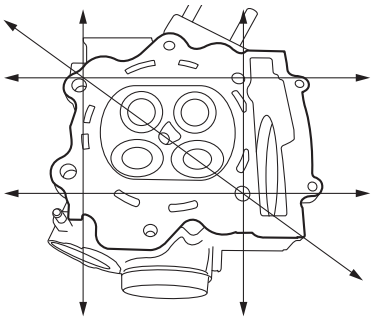

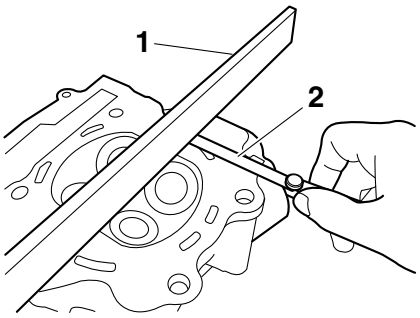

b. Measure the warpage.
c. If the limit is exceeded, resurface the cylinder head as follows.
d. Place a 400–600 grit wet sandpaper on the surface plate and resurface the cylinder head using a figure-eight sanding pattern.

TIP

To ensure an even surface, rotate the cylinder head several times.

▲▲▲▲▲▲▲▲▲▲▲▲▲▲▲▲▲▲▲▲▲▲▲▲▲▲▲▲▲▲▲▲▲▲▲▲▲▲

EAS1S3L024

CHECKING THE CAMSHAFT SPROCKET

1. Check:
   - Camshaft sprocket
     More than 1/4 tooth wear “a” → Replace the camshaft sprockets and the timing chain as a set.

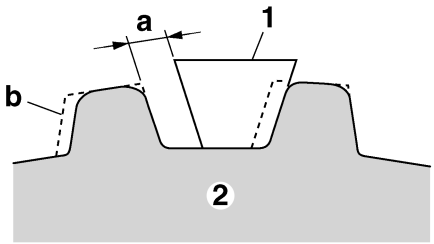

a. 1/4 tooth
b. Correct
1. Timing chain roller
2. Camshaft sprocket

EAS23940

CHECKING THE TAPPET COVERS AND CAMSHAFT SPROCKET COVER

The following procedure applies to both of the tappet covers and O-rings.

1. Check:
   - Tappet covers “1”
   - Camshaft sprocket cover “2”
   - O-ring
     Damage/wear → Replace the defective part(s).

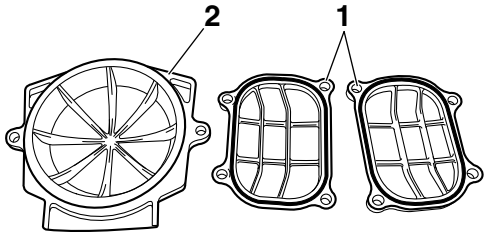

EAS23960

CHECKING THE TIMING CHAIN TENSIONER

1. Check:
   - Timing chain tensioner
     Cracks/damage → Replace.
2. Check:
   - One-way cam operation
     Rough movement → Replace the timing chain tensioner housing.
3. Check:
   - Cap bolt
   - Copper washer
   - Spring
   - One-way cam
   - Timing chain tensioner gasket
   - Timing chain tensioner rod
     Damage/wear → Replace the defective part(s).

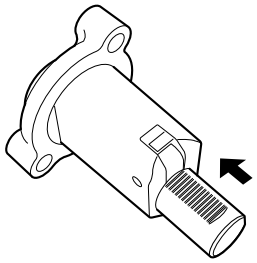

EAS24230

INSTALLING THE CYLINDER HEAD

1. Install:
   - Cylinder head gasket New
   - Dowel pins
2. Install:
   - Cylinder head
   - Cylinder head bolts

Cylinder head bolt "1"
35 Nm (3.5 m·kg, 25 ft·lb)
Cylinder head bolt "2"
35 Nm (3.5 m·kg, 25 ft·lb)
Cylinder head bolt "3"
38 Nm (3.8 m·kg, 27 ft·lb)
Cylinder head bolt "4"
10 Nm (1.0 m·kg, 7.2 ft·lb)

Cylinder head bolts "1"
Length: 135 mm (5.31 in)
Cylinder head bolts "2"
Length: 145 mm (5.71 in)

TIP

- Lubricate the cylinder head bolt "1" and "2" threads and mating surface with molybdenum disulfide grease.
- Lubricate the cylinder head bolts "3" threads and mating surface with engine oil.
- Tighten the cylinder head bolts in the proper tightening sequence as shown and torque them in two stages.

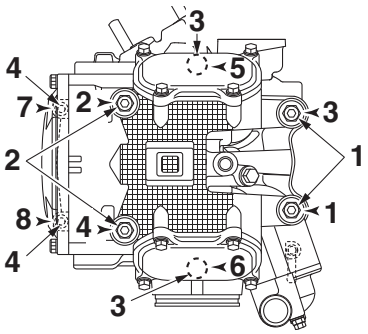

3. Install:
   - Camshaft sprocket
   - Timing chain

▼▼▼▼▼▼▼▼▼▼▼▼▼▼▼▼▼▼▼▼▼▼▼▼▼▼▼▼▼▼▼▼▼▼

a. Turn the crankshaft counterclockwise.
b. Align the "I" mark "a" on the AC magneto rotor with the stationary pointer "b" on the AC magneto cover.

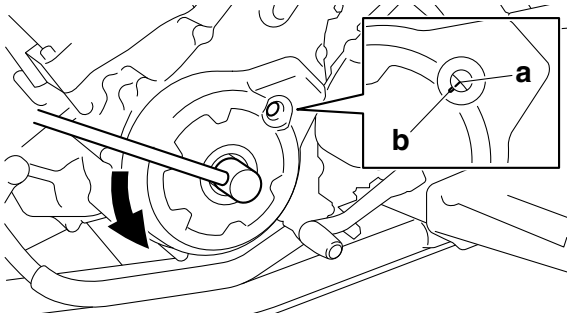

c. Align the "I" mark "c" on the camshaft sprocket with the stationary pointer "d" on the cylinder head.
d. Install the timing chain "1" onto the camshaft sprocket "2", and then install the camshaft sprocket onto the camshaft.

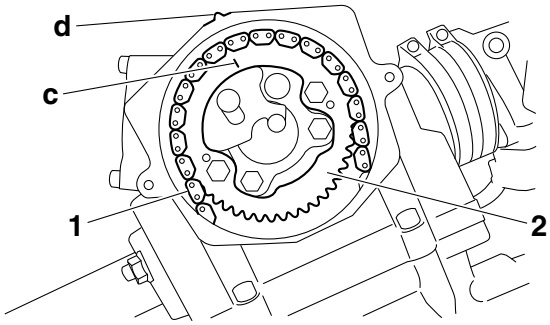

TIP

- When installing the camshaft sprocket, be sure to keep the timing chain as tight as possible on the exhaust side.
- Align the pin on the camshaft with the slot in the camshaft sprocket.

ECA1S3L016

NOTICE

Do not turn the crankshaft when installing the camshaft to avoid damage or improper valve timing.

e. While holding the camshaft, temporarily tighten the camshaft sprocket bolts.
f. Remove the wire from the timing chain.

▲▲▲▲▲▲▲▲▲▲▲▲▲▲▲▲▲▲▲▲▲▲▲▲▲▲▲▲▲▲▲▲▲▲

4. Install:
   - Timing chain tensioner

▼▼▼▼▼▼▼▼▼▼▼▼▼▼▼▼▼▼▼▼▼▼▼▼▼▼▼▼▼▼▼▼▼▼

a. Remove the timing chain tensioner cap bolt "1", copper washer "2" and spring "3".

b. Release the timing chain tensioner one-way cam “4” and push the timing chain tensioner rod “5” all the way into the timing chain tensioner housing.
c. Install the timing chain tensioner and gasket “6” onto the cylinder.

TIP

Install the gasket with its beaded side facing the timing chain tensioner end.

	Timing chain tensioner bolt 10 Nm (1.0 m·kg, 7.2 ft·lb)

d. Install the spring and timing chain tensioner cap bolt.

	Timing chain tensioner cap bolt 20 Nm (2.0 m·kg, 14 ft·lb)

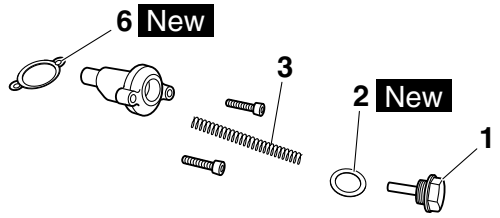

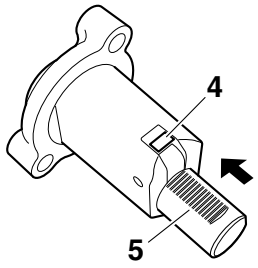

▲▲▲▲▲▲▲▲▲▲▲▲▲▲▲▲▲▲▲▲▲▲▲▲▲▲▲▲▲▲▲▲

5. Turn:
   - Crankshaft
     (several turns counterclockwise)
6. Check:
   - “I” mark “a”
     Align the “I” mark on the AC magneto rotor with the stationary pointer “b” on the AC magneto cover.
   - “I” mark “c”
     Align the “I” mark on the camshaft sprocket with the stationary pointer “d” on the cylinder head.
     Out of alignment → Correct.
     Refer to the installation steps above.

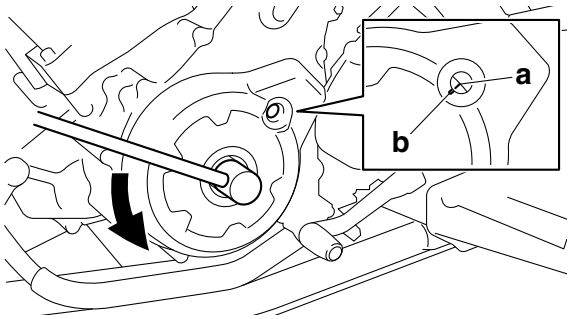

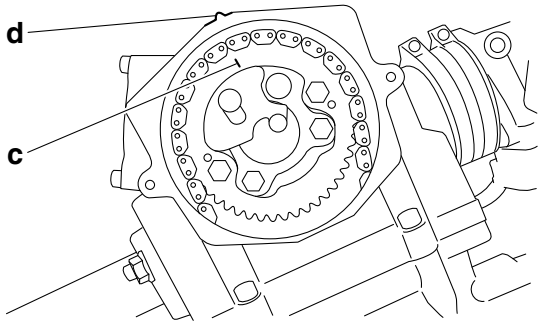

7. Tighten:
   - Camshaft sprocket bolts

	Camshaft sprocket bolt 20 Nm (2.0 m·kg, 14 ft·lb)

ECA13750

NOTICE

Be sure to tighten the camshaft sprocket bolts to the specified torque to avoid the possibility of the bolts coming loose and damaging the engine.

8. Measure:
   - Valve clearance
     Out of specification → Adjust.
     Refer to “ADJUSTING THE VALVE CLEARANCE” on page 3-4.

EAS23730

CAMSHAFT

Removing the rocker arms and camshaft

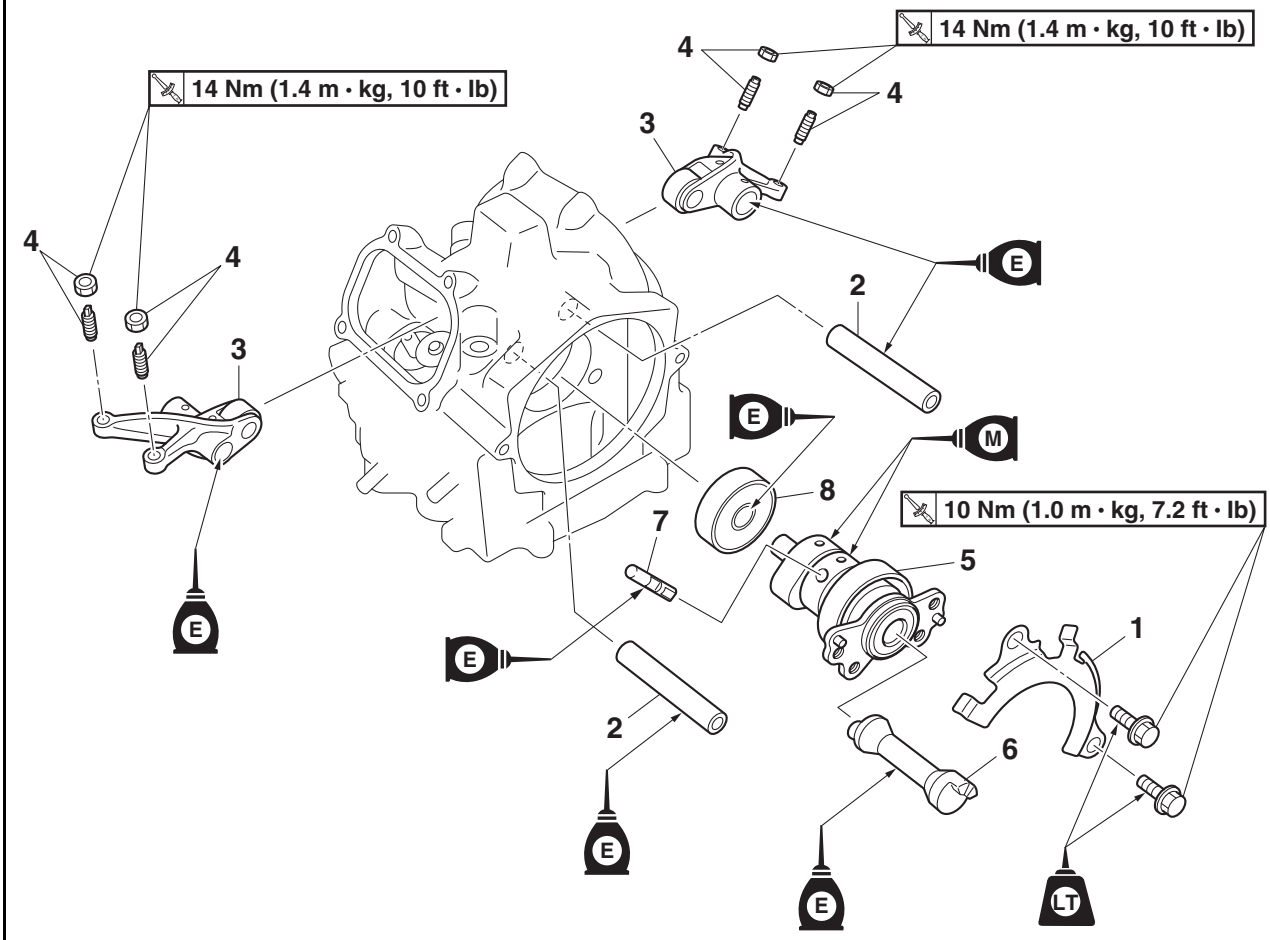

Order	Job/Parts to remove	Q'ty	Remarks
	Cylinder head		Refer to "CYLINDER HEAD" on page 5-8.
1	Camshaft retainer	1	
2	Rocker arm shaft	2	
3	Rocker arm	2	
4	Locknut/valve adjuster	4/4	
5	Camshaft	1	ECA1S3L017 ***NOTICE*** **Do not disassemble the camshaft assembly.**
6	Decompressor lever	1	
7	Decompressor lever pin	1	
8	Bearing	1	
			For installation, reverse the removal procedure.

EAS23770

REMOVING THE ROCKER ARMS AND CAMSHAFT

1. Loosen:
   - Locknuts
   - Valve clearance adjusting screws
2. Remove:
   - Camshaft retainer “1”

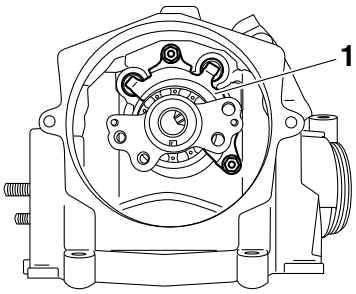

3. Remove:
   - Intake rocker arm shaft
   - Exhaust rocker arm shaft
   - Intake rocker arm
   - Exhaust rocker arm

TIP

Remove the rocker arm shafts with the slide hammer bolt “1” and weight “2”.

Slide hammer bolt
90890-01083
Slide hammer bolt 6 mm
YU-01083-1
Weight
90890-01084
Weight
YU-01083-3

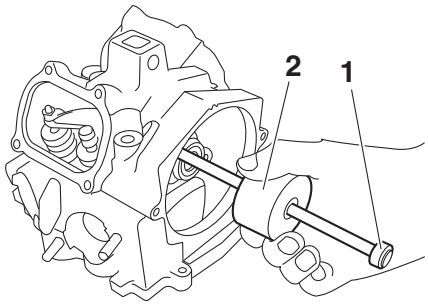

4. Remove:
   - Camshaft

EAS23840

CHECKING THE CAMSHAFT

1. Check:
   - Camshaft lobes
     Blue discoloration/pitting/scratches → Replace the camshaft.
2. Measure:
   - Camshaft lobe dimensions “a” and “b”
     Out of specification → Replace the camshaft.

Camshaft lobe dimension limit
Intake A
43.300–43.400 mm (1.7047–1.7087 in)
Limit
43.200 mm (1.7008 in)
Intake B
37.026–37.126 mm (1.4577–1.4617 in)
Limit
36.926 mm (1.4538 in)
Exhaust A
43.129–43.229 mm (1.6980–1.7019 in)
Limit
43.029 mm (1.6941 in)
Exhaust B
37.057–37.157 mm (1.4589–1.4629 in)
Limit
36.957 mm (1.4550 in)

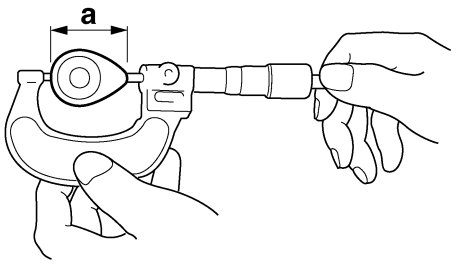

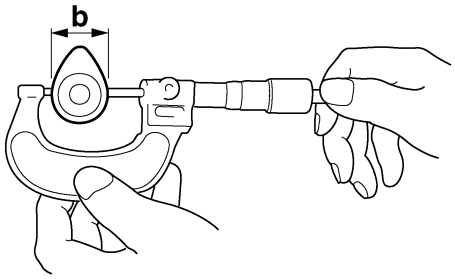

3. Measure:
   - Camshaft runout
     Out of specification → Replace.

Camshaft runout limit
0.030 mm (0.0012 in)

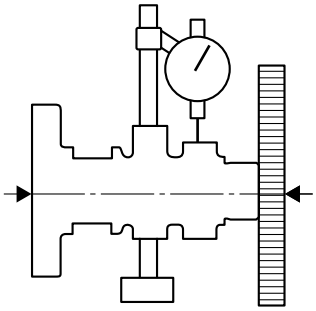

EAS1S3L025
CHECKING THE DECOMPRESSION SYSTEM

1. Check:
   - Decompression system

▼▼▼▼▼▼▼▼▼▼▼▼▼▼▼▼▼▼▼▼▼▼▼▼▼▼▼▼▼▼▼▼▼▼

a. Check the decompression system with the camshaft sprocket installed on and the decompressor lever pin installed in the camshaft.
b. Check that the decompressor lever pin “1” projects from the camshaft.
c. Check that the decompressor cam “2” moves smoothly.

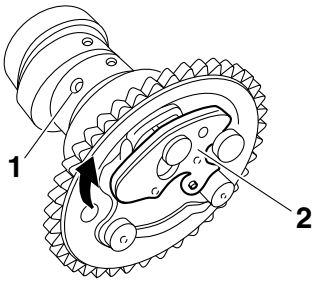

▲▲▲▲▲▲▲▲▲▲▲▲▲▲▲▲▲▲▲▲▲▲▲▲▲▲▲▲▲▲▲▲▲▲

EAS23880
CHECKING THE ROCKER ARMS AND ROCKER ARM SHAFTS

The following procedure applies to all of the rocker arms and rocker arm shafts.

1. Check:
   - Rocker arm
     Damage/wear → Replace.
2. Check:
   - Rocker arm shaft
     Blue discoloration/excessive wear/pitting/scratches → Replace or check the lubrication system.
3. Measure:
   - Rocker arm inside diameter
     Out of specification → Replace.

Rocker arm inside diameter
12.000–12.018 mm (0.4724–0.4731 in)

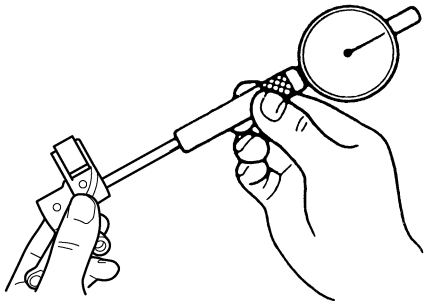

4. Measure:
   - Rocker arm shaft outside diameter
     Out of specification → Replace.

Rocker arm shaft outside diameter
11.981–11.991 mm (0.4717–0.4721 in)

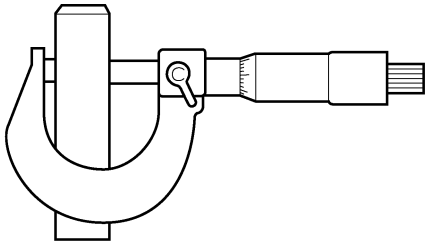

5. Calculate:
   - Rocker-arm-to-rocker-arm-shaft clearance
     Out of specification → Replace the defective part(s).

TIP

Calculate the clearance by subtracting the rocker arm shaft outside diameter from the rocker arm inside diameter.

Rocker-arm-to-rocker-arm-shaft clearance
0.009–0.037 mm (0.0004–0.0015 in)

EAS24040
INSTALLING THE CAMSHAFT AND ROCKER ARMS

1. Install:
   - Bearing “1”
     (onto the camshaft)

TIP

- Apply engine oil to the bearing.
- Install the bearing so that the seal “a” is facing the camshaft.

Installed depth “b”
0 mm (0 in)

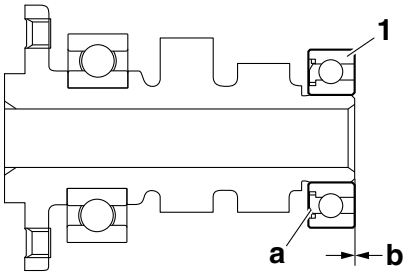

2. Lubricate:
   - Camshaft
   - Decompressor lever pin
   - Decompressor lever

Recommended lubricant
Camshaft, decompressor lever pin
Molybdenum disulfide oil
Camshaft bearing, decompressor lever
Engine oil

3. Install:
   - Decompressor lever pin “1”
   - Decompressor lever “2”

TIP

Install the decompressor lever pin “1” and decompressor lever “2” in the camshaft “3” as shown in the illustration.

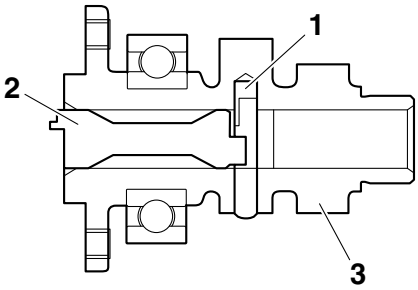

4. Install:
   - Camshaft “1”

TIP

Install the camshaft so that the camshaft sprocket mounting pins “a” can be aligned with the camshaft sprocket cover bolt holes “b”.

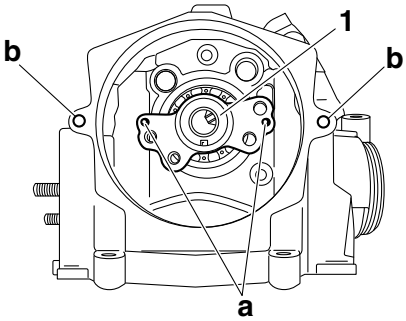

5. Lubricate:
   - Rocker arms
   - Rocker arm shafts

Recommended lubricant
Rocker arm inner surface
Molybdenum disulfide oil
Rocker arm shaft
Engine oil

6. Install:
   - Exhaust rocker arm “1”
   - Exhaust rocker arm shaft “2”
   - Intake rocker arm
   - Intake rocker arm shaft

TIP

- Use a slide hammer bolt “3” to install the rocker arm shaft.
- Make sure the exhaust rocker arm shaft is completely pushed into the cylinder head.

Slide hammer bolt
90890-01083
Slide hammer bolt 6 mm
YU-01083-1

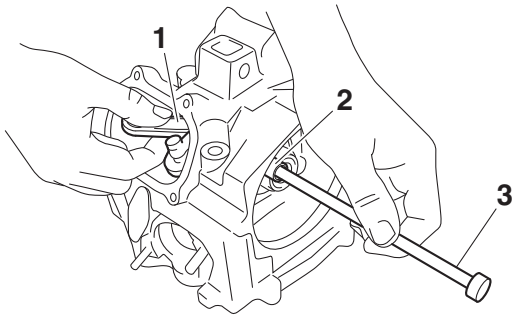

7. Install:
   - Camshaft retainer
   - Camshaft retainer bolts

	Camshaft retainer bolt **10 Nm (1.0 m·kg, 7.2 ft·lb)**

EAS24270

VALVES AND VALVE SPRINGS

Removing the valves and valve springs

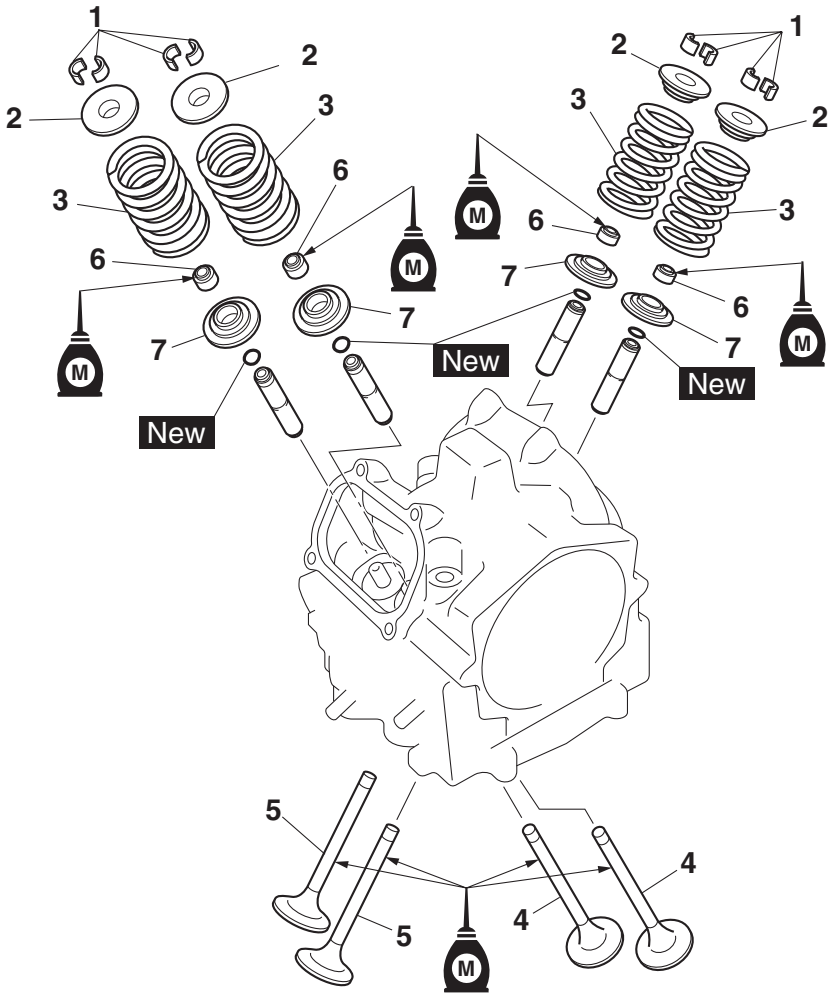

Order	Job/Parts to remove	Q'ty	Remarks
	Cylinder head		Refer to "CYLINDER HEAD" on page 5-8.
	Rocker arms/rocker arm shafts/camshaft		Refer to "CAMSHAFT" on page 5-14.
1	Valve cotter	8	
2	Valve spring retainer	4	
3	Valve spring	4	
4	Exhaust valve	2	
5	Intake valve	2	
6	Valve stem seal	4	
7	Valve spring seat	4	
			For installation, reverse the removal procedure.

EAS24280

REMOVING THE VALVES

The following procedure applies to all of the valves and related components.

TIP

Before removing the internal parts of the cylinder head (e.g., valves, valve springs, valve seats), make sure the valves properly seal.

1. Check:
   - Valve sealing
     Leakage at the valve seat → Check the valve face, valve seat, and valve seat width.
     Refer to "CHECKING THE VALVE SEATS" on page 5-22.

▼▼▼▼▼▼▼▼▼▼▼▼▼▼▼▼▼▼▼▼▼▼▼▼▼▼▼▼▼▼▼▼▼▼

a. Pour a clean solvent "a" into the intake and exhaust ports.
b. Check that the valves properly seal.

TIP

There should be no leakage at the valve seat "1".

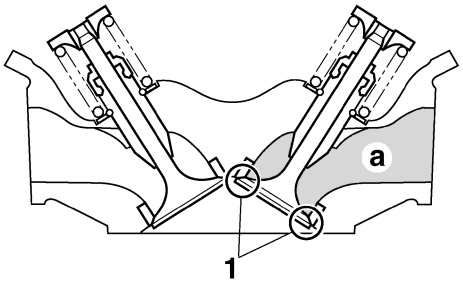

▲▲▲▲▲▲▲▲▲▲▲▲▲▲▲▲▲▲▲▲▲▲▲▲▲▲▲▲▲▲▲▲▲▲

2. Remove:
   - Valve cotters

TIP

Remove the valve cotters by compressing the valve spring with the valve spring compressor "1" and the valve spring compressor attachment "2".

Valve spring compressor
90890-04019
Valve spring compressor
YM-04019
Valve spring compressor attachment
90890-01243
Valve spring compressor adapter (26 mm)
YM-01253-1

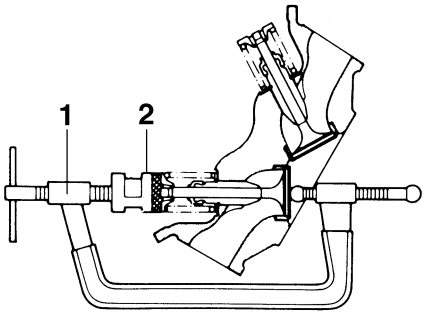

3. Remove:
   - Valve spring retainer "1"
   - Valve spring "2"
   - Valve "3"
   - Valve stem seal "4"
   - Valve spring seat "5"

TIP

Identify the position of each part very carefully so that it can be reinstalled in its original place.

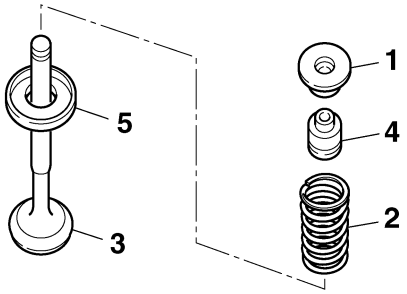

EAS24290

CHECKING THE VALVES AND VALVE GUIDES

The following procedure applies to all of the valves and valve guides.

1. Measure:
   - Valve-stem-to-valve-guide clearance
     Out of specification → Replace the valve guide.

- Valve-stem-to-valve-guide clearance = Valve guide inside diameter "a" - Valve stem diameter "b"

Valve-stem-to-valve-guide clearance (intake)
0.010–0.037 mm (0.0004–0.0015 in)
Limit
0.080 mm (0.0031 in)
Valve-stem-to-valve-guide clearance (exhaust)
0.025–0.052 mm (0.0010–0.0020 in)
Limit
0.100 mm (0.0039 in)

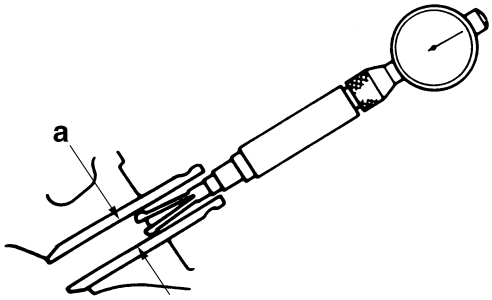

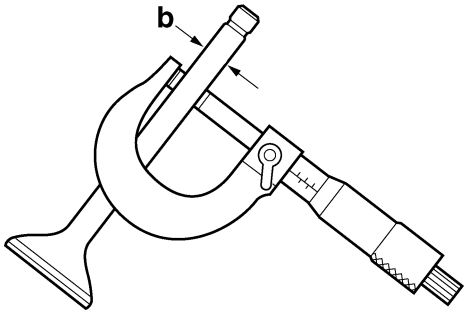

2. Replace:
   - Valve guide

TIP

To ease valve guide removal and installation, and to maintain the correct fit, heat the cylinder head to 100 °C (212 °F) in an oven.

▼▼▼▼▼▼▼▼▼▼▼▼▼▼▼▼▼▼▼▼▼▼▼▼▼▼▼▼▼▼▼▼▼▼

a. Remove the valve guide with the valve guide remover “1”.

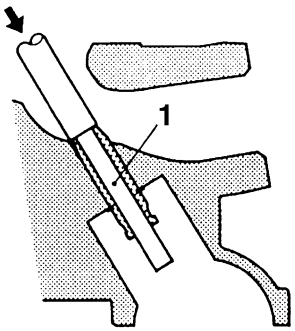

b. Install the new valve guide with the valve guide installer “2” and valve guide remover “1”.

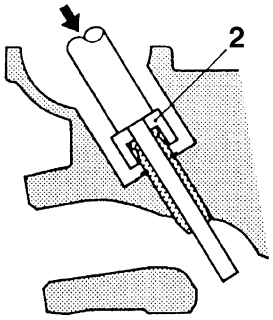

c. After installing the valve guide, bore the valve guide with the valve guide reamer “3” to obtain the proper valve-stem-to-valve-guide clearance.

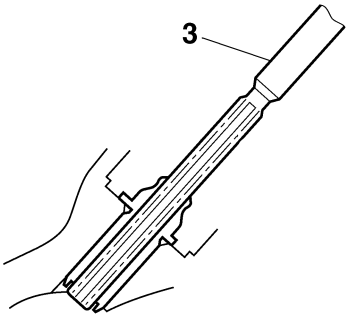

TIP

After replacing the valve guide, reface the valve seat.

Valve guide remover (ø6)
90890-04064
Valve guide remover (6.0 mm)
YM-04064-A
Valve guide installer (ø6)
90890-04065
Valve guide installer (6.0 mm)
YM-04065-A
Valve guide reamer (ø6)
90890-04066
Valve guide reamer (6.0 mm)
YM-04066

▲▲▲▲▲▲▲▲▲▲▲▲▲▲▲▲▲▲▲▲▲▲▲▲▲▲▲▲▲▲▲▲▲▲

3. Eliminate:
   - Carbon deposits
     (from the valve face and valve seat)
4. Check:
   - Valve face
     Pitting/wear → Grind the valve face.

- Valve stem end
  Mushroom shape or diameter larger than the body of the valve stem → Replace the valve.

5. Measure:
   - Valve stem runout
     Out of specification → Replace the valve.

TIP

- When installing a new valve, always replace the valve guide.
- If the valve is removed or replaced, always replace the oil seal.

Valve stem runout
0.010 mm (0.0004 in)

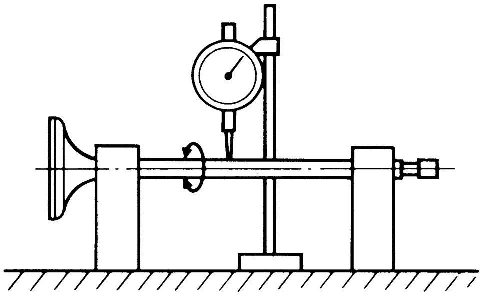

EAS24300

CHECKING THE VALVE SEATS

The following procedure applies to all of the valves and valve seats.

1. Eliminate:
   - Carbon deposits
     (from the valve face and valve seat)
2. Check:
   - Valve seat
     Pitting/wear → Replace the cylinder head.
3. Measure:
   - Valve seat width "a"
     Out of specification → Replace the cylinder head.

Valve seat contact width (intake)
1.00–1.20 mm (0.0394–0.0472 in)
Limit
1.6 mm (0.063 in)
Valve seat contact width (exhaust)
1.00–1.20 mm (0.0394–0.0472 in)
Limit
1.6 mm (0.063 in)

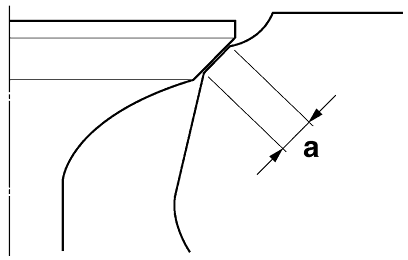

▼▼▼▼▼▼▼▼▼▼▼▼▼▼▼▼▼▼▼▼▼▼▼▼▼▼▼▼▼▼▼▼▼▼

a. Apply blue layout fluid "b" onto the valve face.

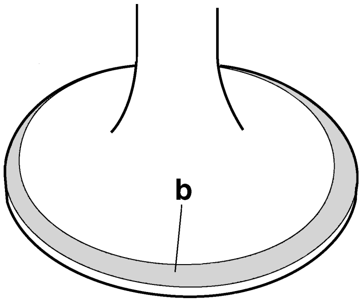

b. Install the valve into the cylinder head.
c. Press the valve through the valve guide and onto the valve seat to make a clear impression.
d. Measure the valve seat width.

TIP

Where the valve seat and valve face contacted one another, the blue layout fluid will have been removed.

▲▲▲▲▲▲▲▲▲▲▲▲▲▲▲▲▲▲▲▲▲▲▲▲▲▲▲▲▲▲▲▲▲▲

4. Lap:
   - Valve face
   - Valve seat

TIP

After replacing the cylinder head or replacing the valve and valve guide, the valve seat and valve face should be lapped.

▼▼▼▼▼▼▼▼▼▼▼▼▼▼▼▼▼▼▼▼▼▼▼▼▼▼▼▼▼▼▼▼▼▼

a. Apply a coarse lapping compound "a" to the valve face.

ECA13790

NOTICE

Do not let the lapping compound enter the gap between the valve stem and the valve guide.

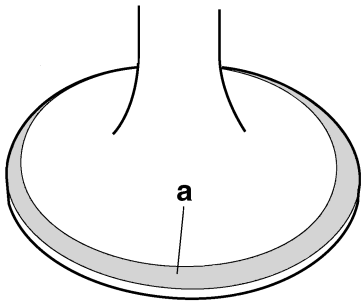

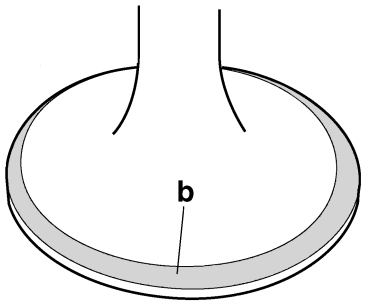

b. Apply molybdenum disulfide oil onto the valve stem.

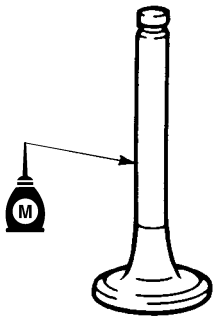

c. Install the valve into the cylinder head.
d. Turn the valve until the valve face and valve seat are evenly polished, then clean off all of the lapping compound.

TIP

For the best lapping results, lightly tap the valve seat while rotating the valve back and forth between your hands.

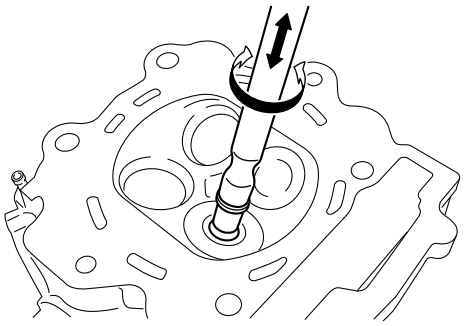

e. Apply a fine lapping compound to the valve face and repeat the above steps.
f. After every lapping procedure, be sure to clean off all of the lapping compound from the valve face and valve seat.
g. Apply blue layout fluid “b” onto the valve face.
h. Install the valve into the cylinder head.
i. Press the valve through the valve guide and onto the valve seat to make a clear impression.
j. Measure the valve seat width “c” again. If the valve seat width is out of specification, reface and lap the valve seat.

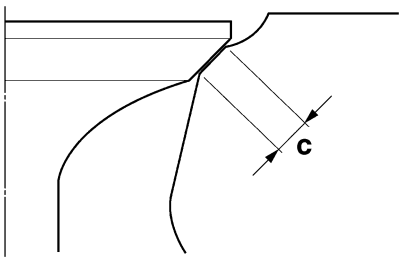

EAS24310

CHECKING THE VALVE SPRINGS

The following procedure applies to all of the valve springs.

1. Measure:
   - Valve spring free length “a”
     Out of specification → Replace the valve spring.

Free length (intake)
38.79 mm (1.53 in)
Limit
36.85 mm (1.45 in)
Free length (exhaust)
38.79 mm (1.53 in)
Limit
36.85 mm (1.45 in)

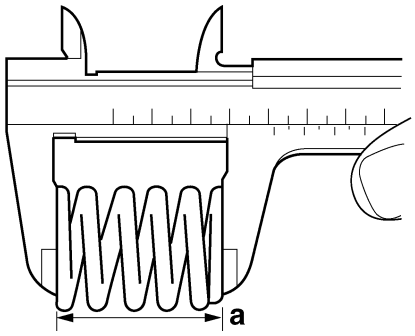

2. Measure:
   - Compressed valve spring force “a”
     Out of specification → Replace the valve spring.

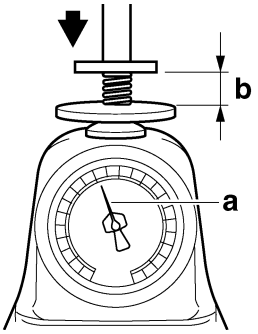

b. Installed length

	Installed compression spring force (intake) **169.00–199.00 N (17.23–20.29 kgf, 37.99–44.73 lbf)** **Installed compression spring force (exhaust)** **169.00–199.00 N (17.23–20.29 kgf, 37.99–44.73 lbf)** **Installed length (intake)** **35.00 mm (1.38 in)** **Installed length (exhaust)** **35.00 mm (1.38 in)**

3. Measure:
   - Valve spring tilt “a”
     Out of specification → Replace the valve spring.

	Spring tilt (intake) **2.5°/1.70 mm (2.5°/0.07 in)** **Spring tilt (exhaust)** **2.5°/1.70 mm (2.5°/0.07 in)**

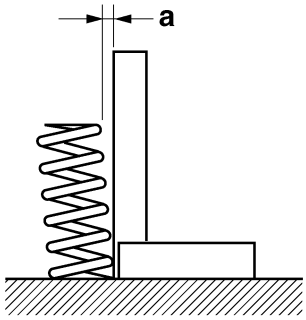

EAS24340

INSTALLING THE VALVES

The following procedure applies to all of the valves and related components.

1. Deburr:
   - Valve stem end
     (with an oil stone)

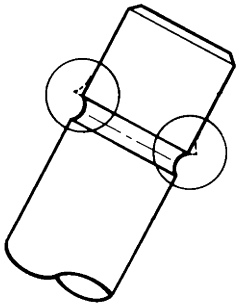

2. Lubricate:
   - Valve stem “1”
   - Valve stem seal “2” New
     (with the recommended lubricant)

	Recommended lubricant **Molybdenum disulfide oil**

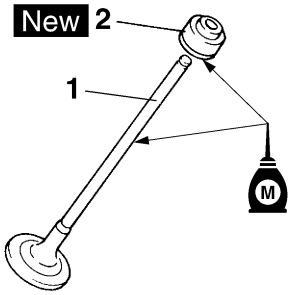

3. Install:
   - Valve spring seat “1”
   - Valve stem seal “2”
   - Valve “3”
   - Valve spring “4”
   - Valve spring retainer “5”
     (into the cylinder head)

TIP

- Make sure each valve is installed in its original place.
- Install the valve springs with the larger pitch “a” facing up.

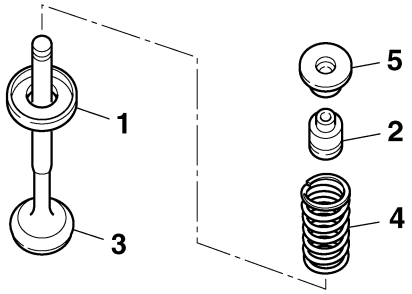

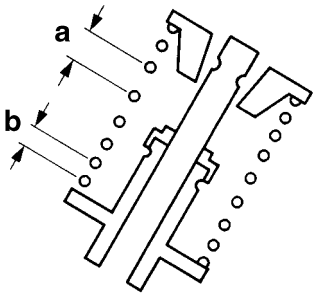

b. Smaller pitch

4. Install:
   - Valve cotters

TIP

Install the valve cotters by compressing the valve spring with the valve spring compressor “1” and the valve spring compressor attachment “2”.

Valve spring compressor
90890-04019
Valve spring compressor
YM-04019
Valve spring compressor attachment
90890-01243
Valve spring compressor adapter (26 mm)
YM-01253-1

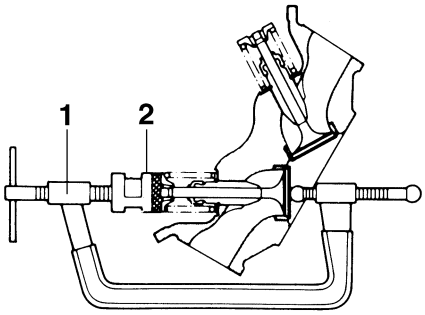

5. To secure the valve cotters onto the valve stem, lightly tap the valve tip with a soft-face hammer.

ECA13800

NOTICE

Hitting the valve tip with excessive force could damage the valve.

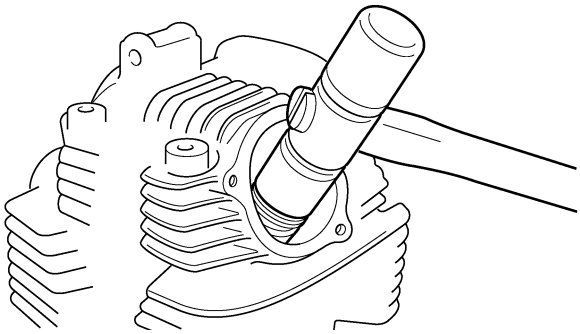

EAS24350

CYLINDER AND PISTON

Removing the cylinder and piston

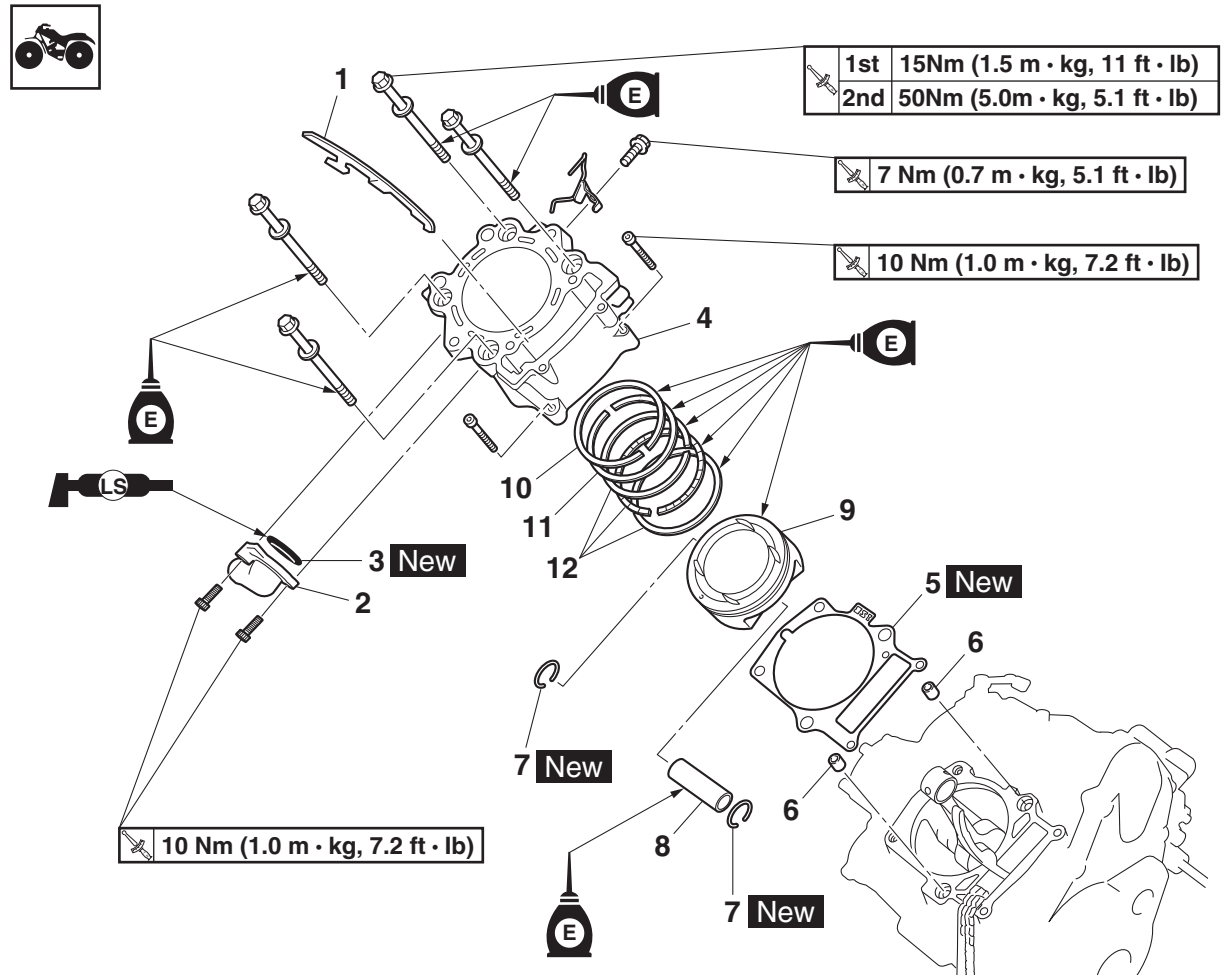

Order	Job/Parts to remove	Q'ty	Remarks
	Cylinder head		Refer to "CYLINDER HEAD" on page 5-8.
1	Timing chain guide (exhaust side)	1	
2	Water jacket joint	1	
3	O-ring	1	
4	Cylinder	1	
5	Cylinder gasket	1	
6	Dowel pin	2	
7	Piston pin clip	2	
8	Piston pin	1	
9	Piston	1	
10	Top ring	1	
11	2nd ring	1	
12	Oil ring	1	
			For installation, reverse the removal procedure.

EAS24380

REMOVING THE PISTON

1. Remove:
   - Piston pin clips “1”
   - Piston pin “2”
   - Piston “3”

ECA13810

NOTICE

Do not use a hammer to drive the piston pin out.

TIP

- Before removing the piston pin clips, cover the crankcase opening with a clean rag to prevent the piston pin clips from falling into the crankcase.
- Before removing the piston pin, deburr the piston pin clip grooves and the piston pin bore area. If both areas are deburred and the piston pin is still difficult to remove, remove it with the piston pin puller set “4”.

Piston pin puller set
90890-01304
Piston pin puller
YU-01304

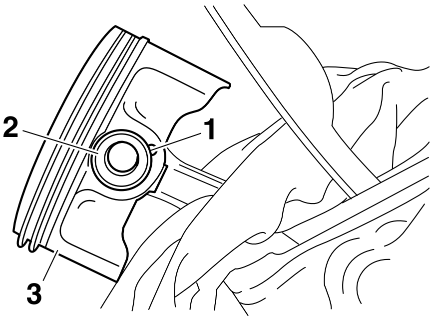

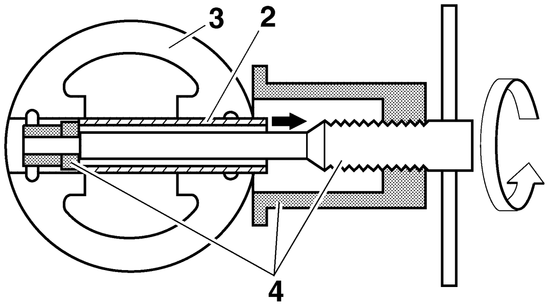

2. Remove:
   - Top ring
   - 2nd ring
   - Oil ring

TIP

When removing a piston ring, open the end gap with your fingers and lift the other side of the ring over the piston crown.

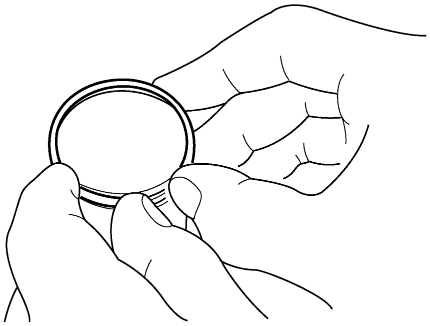

EAS24400

CHECKING THE CYLINDER AND PISTON

1. Check:
   - Piston wall
   - Cylinder wall
     Vertical scratches → Replace the cylinder, and replace the piston and piston rings as a set.
2. Measure:
   - Piston-to-cylinder clearance

▼▼▼▼▼▼▼▼▼▼▼▼▼▼▼▼▼▼▼▼▼▼▼▼▼▼▼▼▼▼▼▼▼▼

a. Measure cylinder bore “C” with the cylinder bore gauge.

TIP

Measure cylinder bore “C” by taking side-to-side and front-to-back measurements of the cylinder. Then, find the average of the measurements.

“C” = maximum of D_1–D_6

“T” = maximum of D_1 or D_2 – maximum of D_5 or D_6

“R” = maximum of D_1, D_3 or D_5 – minimum of D_2, D_4 or D_6

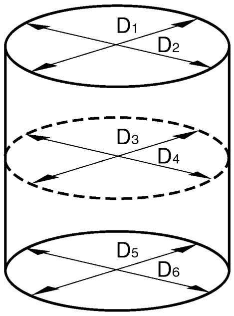

Bore
102.000–102.010 mm (4.0157–4.0161 in)
Wear limit
102.080 mm (4.0189 in)
Taper limit
0.05 mm (0.002 in)
Out of round limit
0.05 mm (0.002 in)

b. If out of specification, replace the cylinder, and replace the piston and piston rings as a set.
c. Measure piston skirt diameter D “a” with the micrometer.

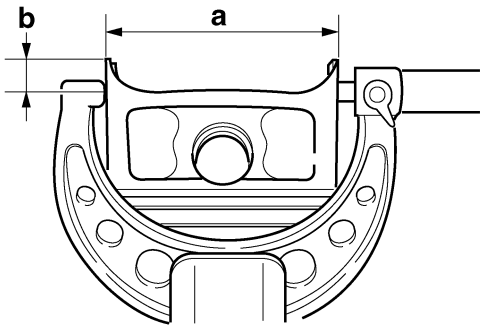

b. 10 mm (0.39 in) from the bottom edge of the piston

Diameter D
101.955–101.970 mm (4.0140–4.0146 in)

d. If out of specification, replace the piston and piston rings as a set.
e. Calculate the piston-to-cylinder clearance with the following formula.

- Piston-to-cylinder clearance =
  Cylinder bore “C” –
  Piston skirt diameter “D”

Piston-to-cylinder clearance
0.030–0.055 mm (0.0012–0.0022 in)
Limit
0.13 mm (0.0051 in)

f. If out of specification, rebore or replace the cylinder, and replace the piston and piston rings as a set.

▲▲▲▲▲▲▲▲▲▲▲▲▲▲▲▲▲▲▲▲▲▲▲▲▲▲▲▲▲▲▲▲▲▲

EAS24430
CHECKING THE PISTON RINGS

1. Measure:
   - Piston ring side clearance
     Out of specification → Replace the piston and piston rings as a set.

TIP

Before measuring the piston ring side clearance, eliminate any carbon deposits from the piston ring grooves and piston rings.

Top ring
Ring side clearance
0.030–0.070 mm (0.0012–0.0028 in)
Limit
0.12 mm (0.0047 in)
2nd ring
Ring side clearance
0.030–0.070 mm (0.0012–0.0028 in)
Limit
0.13 mm (0.0051 in)

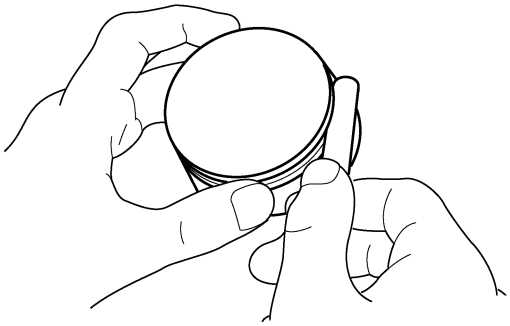

2. Install:
   - Piston ring
     (into the cylinder)

TIP

Use the piston crown to level the piston ring near bottom of cylinder “a”, where cylinder wear is lowest.

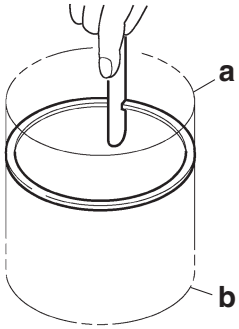

b. Upper of cylinder

3. Measure:
   - Piston ring end gap
     Out of specification → Replace the piston ring.

TIP

The oil ring expander spacer's end gap cannot be measured. If the oil ring rail's gap is excessive, replace all three piston rings.

Top ring
End gap (installed)
0.20–0.35 mm (0.008–0.014 in)
Limit
0.60 mm (0.024 in)
2nd ring
End gap (installed)
0.75–0.90 mm (0.03–0.04 in)
Limit
1.25 mm (0.0492 in)
Oil ring
End gap (installed)
0.20–0.70 mm (0.01–0.03 in)

EAS24440

CHECKING THE PISTON PIN

1. Check:
   - Piston pin
     Blue discoloration/grooves → Replace the piston pin and then check the lubrication system.
2. Measure:
   - Piston pin outside diameter "a"
     Out of specification → Replace the piston pin.

Piston pin outside diameter
22.991–23.000 mm (0.9052–0.9055 in)
Limit
22.971 mm (0.9044 in)

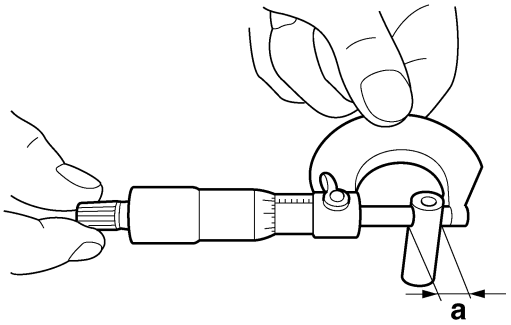

3. Measure:
   - Piston pin bore diameter "b"
     Out of specification → Replace the piston.

Piston pin bore inside diameter
23.004–23.015 mm (0.9057–0.9061 in)
Limit
23.045 mm (0.9073 in)

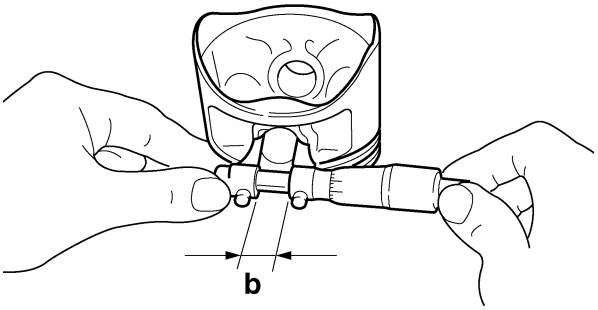

4. Calculate:
   - Piston-pin-to-piston-pin-bore clearance
     Out of specification → Replace the piston pin and piston as a set.

- Piston-pin-to-piston-pin-bore clearance = Piston pin bore diameter "b" – Piston pin outside diameter "a"

Piston-pin-to-piston-pin-bore clearance
0.004–0.024 mm (0.0002–0.0009 in)
Limit
0.074 mm (0.0029 in)

EAS24450

INSTALLING THE PISTON AND CYLINDER

1. Install:
   - Lower oil ring rail "1"
   - Oil ring expander "2"
   - Upper oil ring rail "3"
   - 2nd ring "4"
   - Top ring "5"

TIP

Be sure to install the piston rings so that the manufacturer's marks or numbers face up.

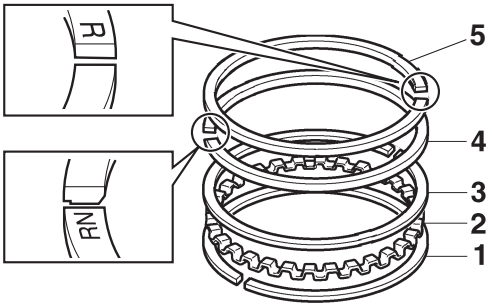

2. Install:
   - Piston “1”
   - Piston pin “2”
   - Piston pin clips “3” New

TIP

- Apply engine oil onto the piston pin.
- Make sure the punch mark “a” on the piston points towards the exhaust side of the cylinder.
- Before installing the piston pin clips, cover the crankcase opening with a clean rag to prevent the clips from falling into the crankcase.

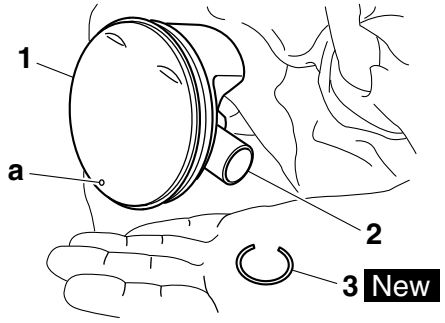

3. Install:
   - Cylinder gasket New
   - Dowel pins
4. Lubricate:
   - Piston
   - Piston rings
   - Cylinder
     (with the recommended lubricant)

	Recommended lubricant **Engine oil**

5. Offset:
   - Piston ring end gaps

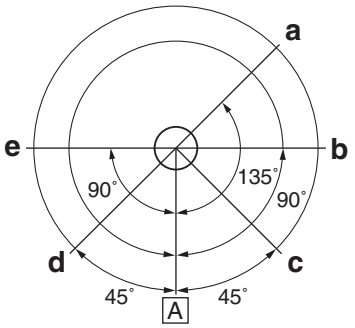

a. Upper oil ring rail
b. Top ring
c. Oil ring expander
d. Lower oil ring rail
e. 2nd ring
A. Exhaust side

6. Install:
   - Cylinder “1”
   - Timing chain guide (exhaust side)

TIP

- While compressing the piston rings with one hand, install the cylinder with the other hand.
- Pass the timing chain and timing chain guide (exhaust side) through the timing chain cavity.

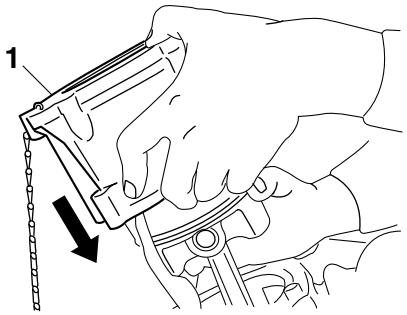

7. Install:
   - Cylinder bolts “1”

TIP

Lubricate the cylinder bolt “1” threads and mating surface with engine oil.

8. Tighten:
   - Cylinder bolts “1”
   - Cylinder bolts (timing chain side) “2”

	Cylinder bolt **1st** **15 Nm (1.5 m·kg, 11 ft·lb)** **2nd** **50 Nm (5.0 m·kg, 36 ft·lb)** **Cylinder bolt (timing chain side)** **10 Nm (1.0 m·kg, 7.2 ft·lb)**

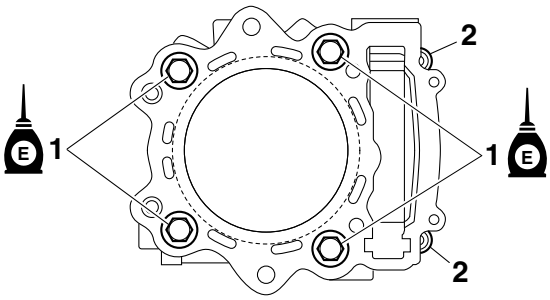

EAS1S3L026

AC MAGNETO AND STARTER CLUTCH

Removing the AC magneto and starter clutch

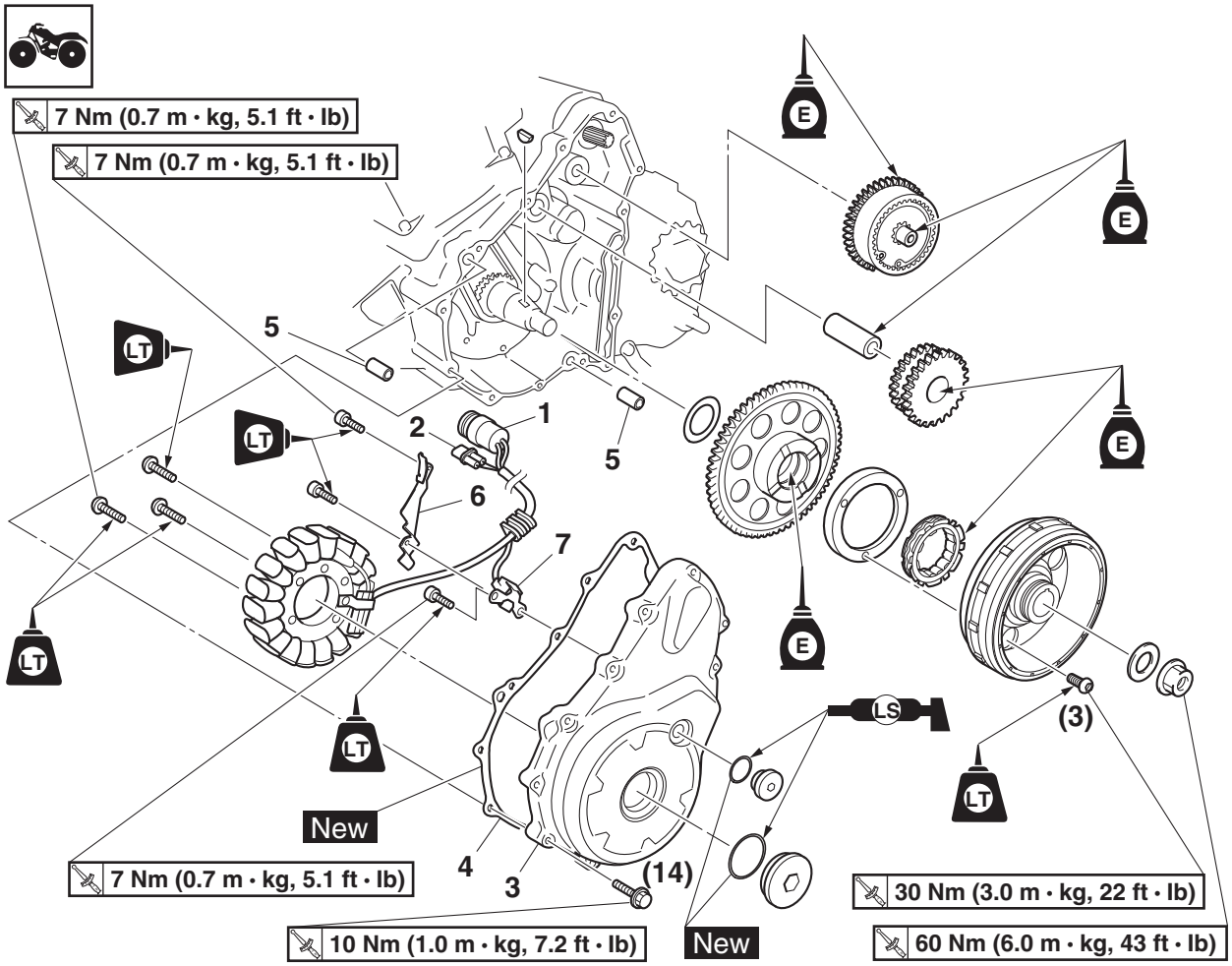

Order	Job/Parts to remove	Q'ty	Remarks
	Engine oil		Drain. Refer to "CHANGING THE ENGINE OIL" on page 3-10.
	Front fender		Refer to "GENERAL CHASSIS" on page 4-1.
	Oil tank inlet hose		Refer to "ENGINE REMOVAL" on page 5-1.
	Drive sprocket cover		Refer to "CHAIN DRIVE" on page 4-63.
1	AC magneto coupler	1	Disconnect.
2	Crankshaft position sensor coupler	1	Disconnect.
3	AC magneto cover	1	
4	AC magneto cover gasket	1	
5	Dowel pin	2	
6	Lead holder	1	
7	Crankshaft position sensor	1	

Removing the AC magneto and starter clutch

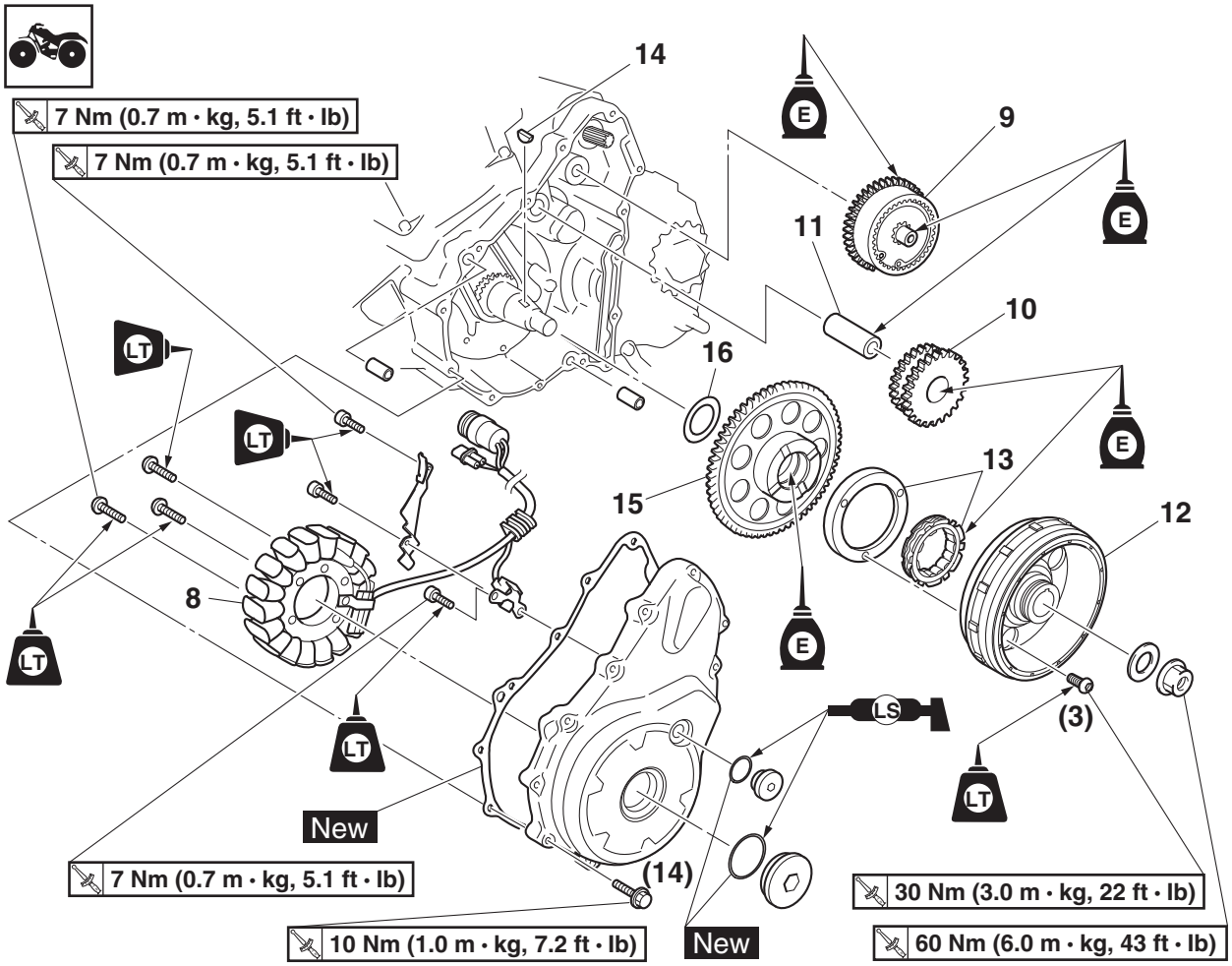

Order	Job/Parts to remove	Q'ty	Remarks
8	Stator coil	1	
9	Torque limiter	1	
10	Starter idle gear	1	
11	Starter idle gear shaft	1	
12	AC magneto rotor	1	
13	Starter clutch	1	
14	Woodruff key	1	
15	Starter wheel gear	1	
16	Washer	1	
			For installation, reverse the removal procedure.

EAS24490

REMOVING THE AC MAGNETO ROTOR

1. Remove:
   - AC magneto cover

TIP

Loosen each bolt 1/4 of a turn at a time, in stages and in a crisscross pattern. After all of the bolts are fully loosened, remove them.

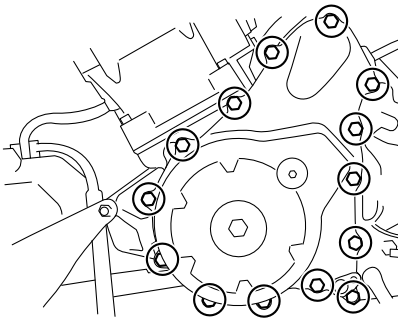

2. Remove:
   - AC magneto rotor nut “1”
   - Washer

TIP

- While holding the AC magneto rotor “2” with the sheave holder “3”, loosen the AC magneto rotor nut.
- Do not allow the sheave holder to touch the projection on the rotor.

Sheave holder
90890-01701
Primary clutch holder
YS-01880-A

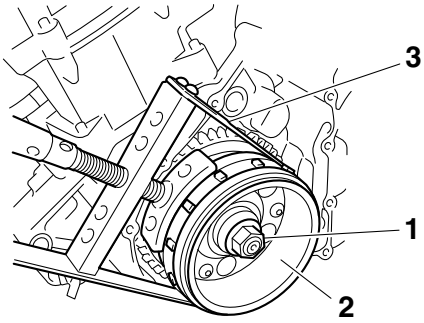

3. Remove:
   - AC magneto rotor “1”
     (with the starter clutch)
   - Woodruff key

ECA13880

NOTICE

To protect the end of the crankshaft, place an appropriate sized socket between the flywheel puller set center bolt and the crankshaft.

TIP

- Use the flywheel puller “2”.
- Install the flywheel puller bolts to the threaded holes of the starter clutch.
- Make sure the flywheel puller is centered over the AC magneto rotor.

Flywheel puller
90890-01404
Flywheel puller
YM-01404

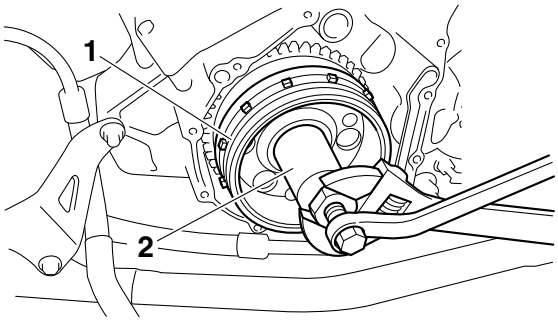

EAS1S3L027

CHECKING THE STATOR COIL AND CRANKSHAFT POSITION SENSOR

1. Check:
   - Stator coil “1”
   - Crankshaft position sensor “2”
     Damage → Replace the crankshaft position sensor/stator assembly.

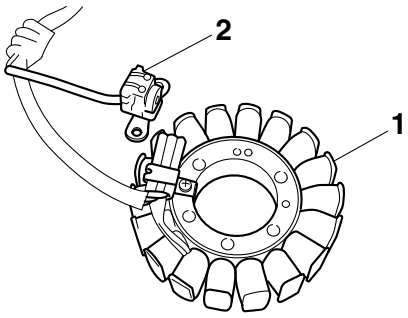

EAS24570

CHECKING THE STARTER CLUTCH

1. Check:
   - Starter one-way clutch “1”
     Cracks/damage → Replace.

- Bolts “2”
  Loose → Replace with a new one, and clinch the end of the bolt.

	**Starter clutch bolt** **30 Nm (3.0 m·kg, 22 ft·lb)** **LOCTITE®**

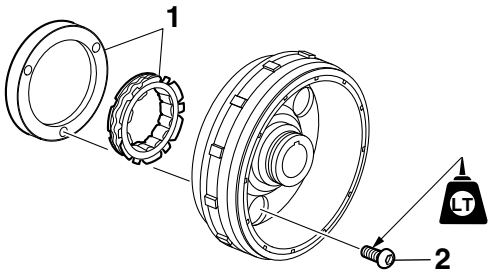

2. Check:
   - Starter idle gear “1”
   - Starter wheel gear “2”
     Burrs/chips/roughness/wear → Replace the defective part(s).

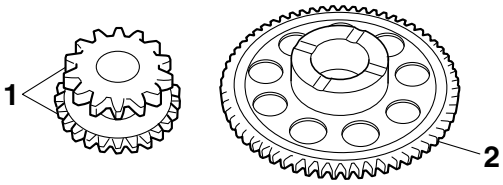

3. Check:
   - Starter wheel gear contacting surfaces
     Damage/pitting/wear → Replace the defective part(s).

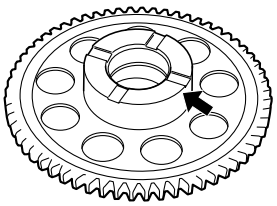

4. Check:
   - Starter clutch operation

▼▼▼▼▼▼▼▼▼▼▼▼▼▼▼▼▼▼▼▼▼▼▼▼▼▼▼▼▼▼▼▼▼▼

a. Install the starter wheel gear onto the starter clutch and hold the starter clutch.
b. When turning the starter wheel gear counterclockwise “A”, the starter clutch and the starter wheel gear should engage, otherwise the starter clutch is faulty and must be replaced.
c. When turning the starter wheel gear clockwise “B”, it should turn freely; otherwise, the starter clutch is faulty and must be replaced.

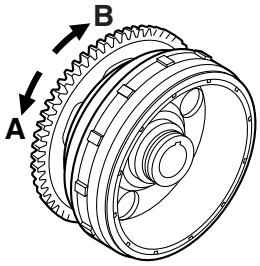

▲▲▲▲▲▲▲▲▲▲▲▲▲▲▲▲▲▲▲▲▲▲▲▲▲▲▲▲▲▲▲▲▲▲

EAS1S3L028

CHECKING THE TORQUE LIMITER

1. Check:
   - Torque limiter
     Damage/wear → Replace.

TIP

Do not disassemble the torque limiter.

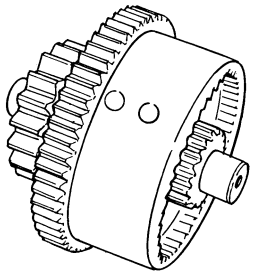

EAS1S3L029

INSTALLING THE AC MAGNETO

1. Install:
   - Stator coil “1”

	**Stator coil bolt** **7 Nm (0.7 m·kg, 5.1 ft·lb)** **LOCTITE®**

TIP

Align the projection “a” on the stator coil with the slot “b” in the AC magneto cover.

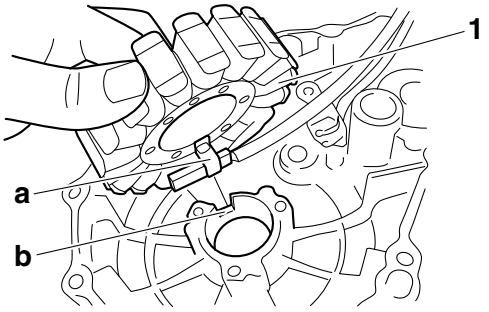

2. Apply:
   - Sealant “1”
     (onto the crankshaft position sensor/stator assembly lead grommet)

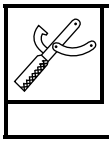

Yamaha bond No. 1215
90890-85505
(Three bond No.1215®)

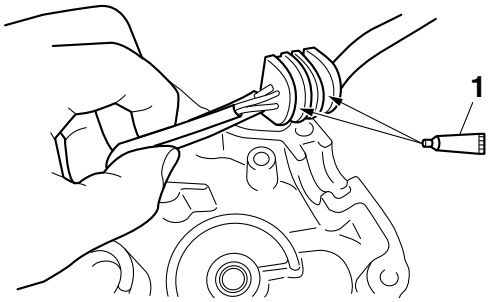

3. Install:
   - Woodruff key
   - AC magneto rotor
   - Washer
   - AC magneto rotor nut

TIP

- Clean the tapered portion of the crankshaft and the AC magneto rotor hub.
- When installing the AC magneto rotor, make sure the woodruff key is properly seated in the keyway of the crankshaft.

4. Tighten:
   - AC magneto rotor nut “1”

AC magneto rotor nut
60 Nm (6.0 m·kg, 43 ft·lb)

TIP

- While holding the AC magneto rotor “2” with the sheave holder “3”, tighten the AC magneto rotor nut.
- Do not allow the sheave holder to touch the projection on the AC magneto rotor.

Sheave holder
90890-01701
Primary clutch holder
YS-01880-A

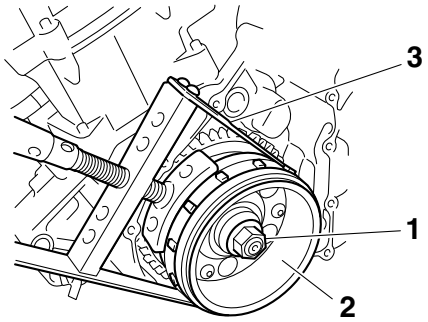

5. Install:
   - Gasket New
   - AC magneto cover
   - AC magneto cover bolts

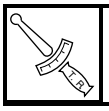

AC magneto cover bolt
10 Nm (1.0 m·kg, 7.2 ft·lb)

TIP

Tighten the AC magneto cover bolts in stages, using a crisscross pattern.

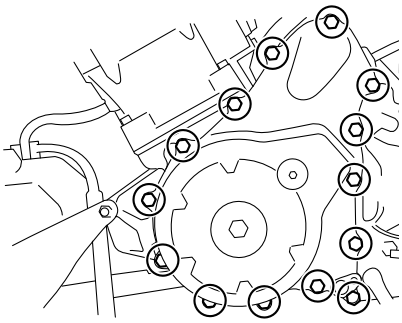

EAS24780

ELECTRIC STARTER

Removing the starter motor

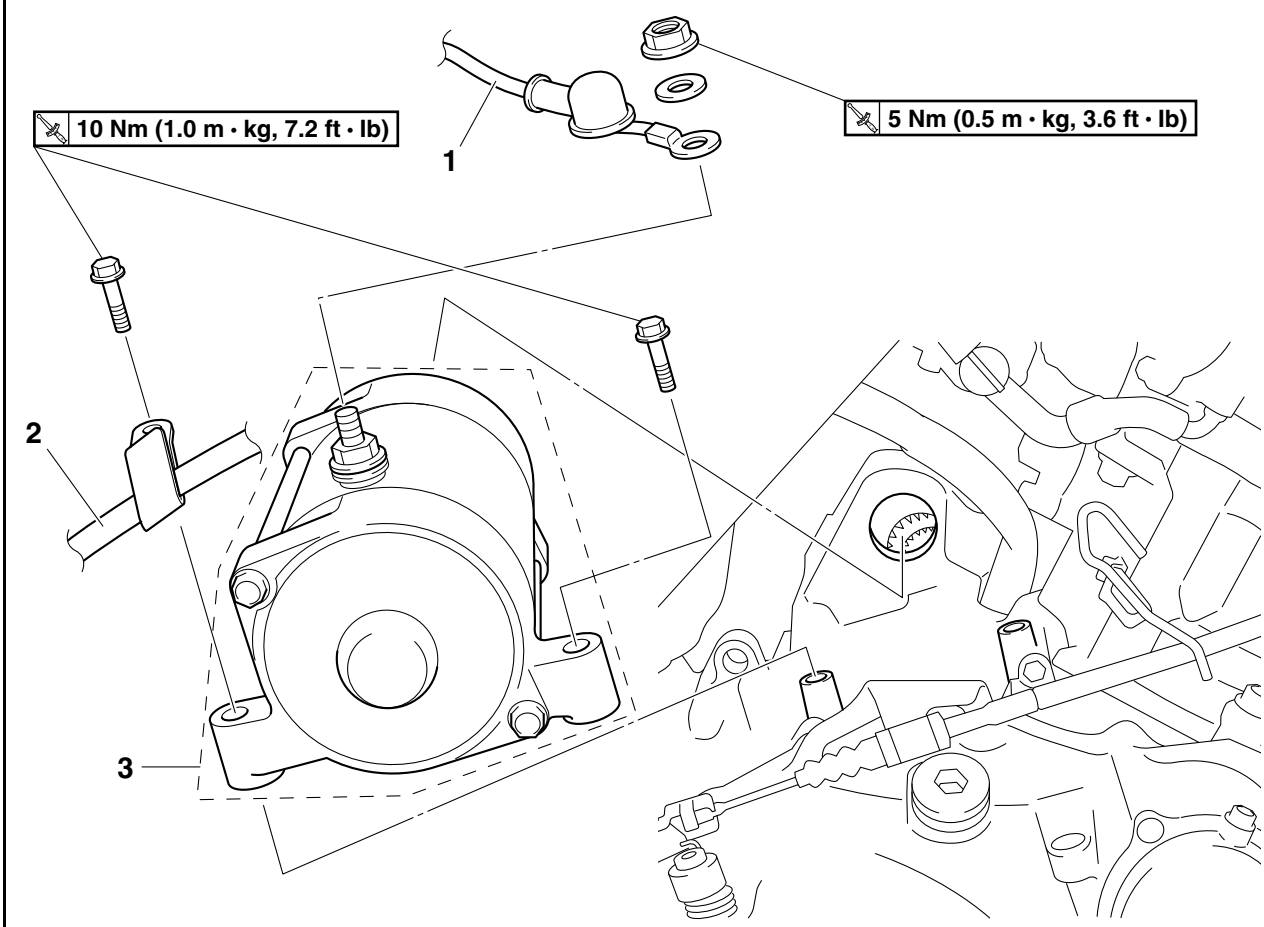

Order	Job/Parts to remove	Q'ty	Remarks
	Exhaust pipe		Refer to "ENGINE REMOVAL" on page 5-1.
1	Starter motor lead	1	Disconnect.
2	Parking brake cable	1	
3	Starter motor	1	
			For installation, reverse the removal procedure.

Disassembling the starter motor

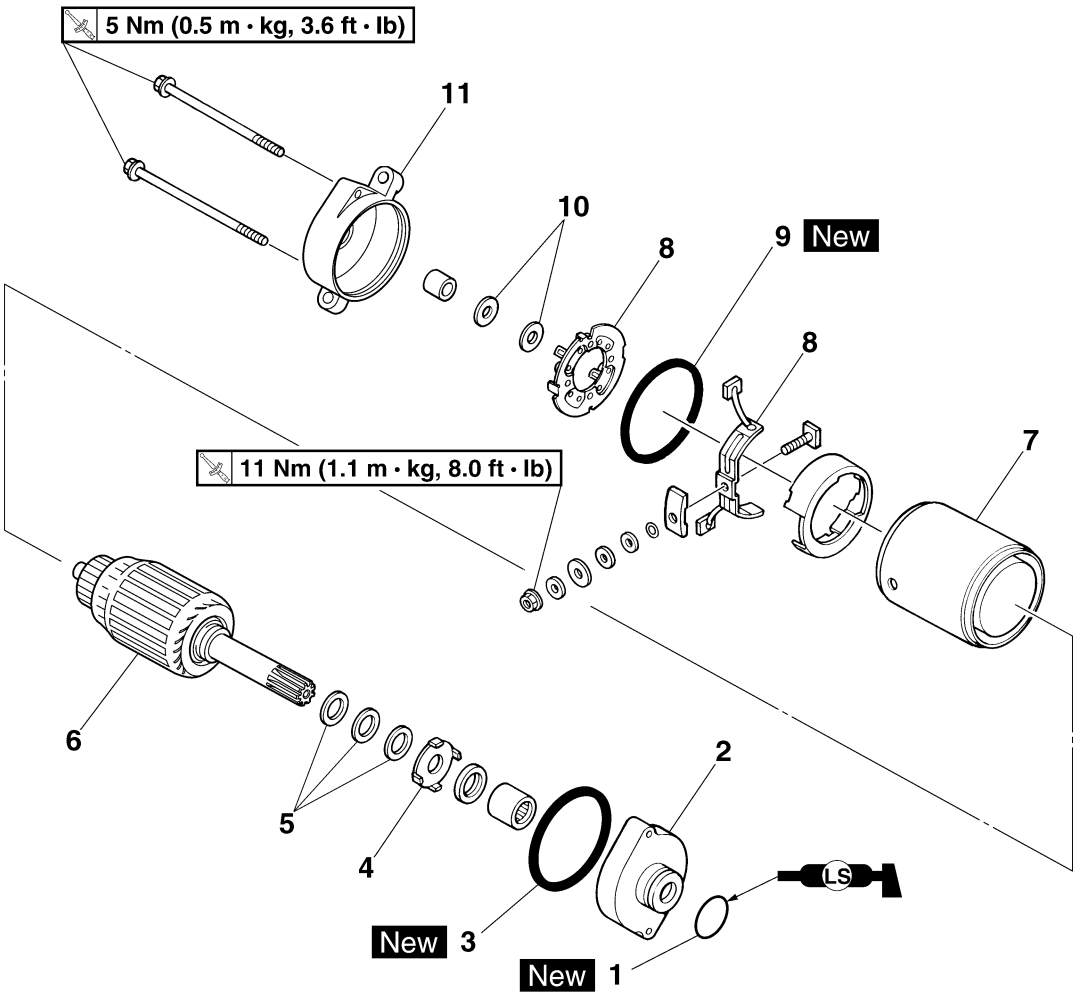

Order	Job/Parts to remove	Q'ty	Remarks
1	O-ring	1	
2	Starter motor front cover	1	
3	Square ring	1	
4	Lock washer	1	
5	Shim	1	
6	Armature assembly	1	
7	Starter motor yoke	1	
8	Brush holder assembly	1	
9	Square ring	1	
10	Shim	1	
11	Starter motor rear cover	1	
			For assembly, reverse the disassembly procedure.

EAS24790

CHECKING THE STARTER MOTOR

1. Check:
   - Commutator
     Dirt → Clean with 600 grit sandpaper.
2. Measure:
   - Commutator diameter “a”
     Out of specification → Replace the starter motor.

Commutator diameter
28.0 mm (1.10 in)
Limit
27.0 mm (1.06 in)

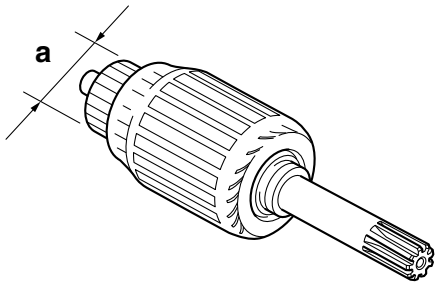

3. Measure:
   - Mica undercut “a”
     Out of specification → Cut the mica to the proper measurement with a hacksaw blade that has been grounded to fit the commutator.

Mica undercut (depth)
0.70 mm (0.03 in)

TIP

The mica of the commutator must be undercut to ensure proper operation of the commutator.

4. Measure:
   - Armature assembly resistances (commutator and insulation)
     Out of specification → Replace the starter motor.

▼▼▼▼▼▼▼▼▼▼▼▼▼▼▼▼▼▼▼▼▼▼▼▼▼▼▼▼▼▼▼▼▼▼

a. Measure the armature assembly resistances with the pocket tester.

Pocket tester
90890-03112
Analog pocket tester
YU-03112-C

Armature coil
Commutator resistance “1”
0.025–0.035 Ω
Insulation resistance “2”
Above 1 MΩ

b. If any resistance is out of specification, replace the starter motor.

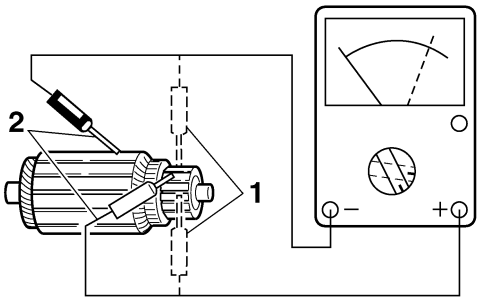

▲▲▲▲▲▲▲▲▲▲▲▲▲▲▲▲▲▲▲▲▲▲▲▲▲▲▲▲▲▲▲▲▲▲

5. Measure:
   - Brush length “a”
     Out of specification → Replace the brushes as a set.

Brush overall length
12.5 mm (0.49 in)
Limit
5.00 mm (0.20 in)

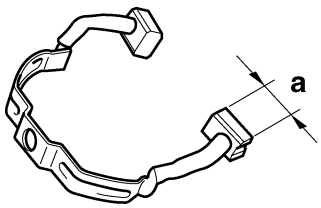

6. Measure:
   - Brush spring force
     Out of specification → Replace the brush springs as a set.

Brush spring force
7.65–10.01 N (780–1021 gf, 27.54–36.03 oz)

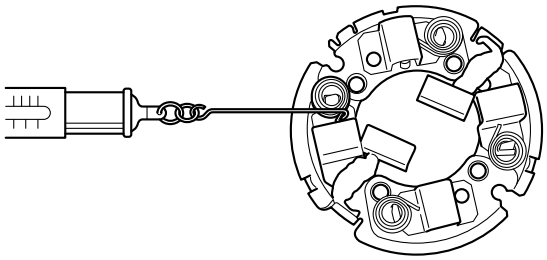

7. Check:
   - Gear teeth
     Damage/wear → Replace the gear.
8. Check:
   - Bushing
   - Bearing
   - Oil seal
     Damage/wear → Replace the defective part(s).

EAS24800

ASSEMBLING THE STARTER MOTOR

1. Install:
   - Brush seat “1”

TIP

Align the tab “a” on the brush seat with the slot “b” in the starter motor yoke.

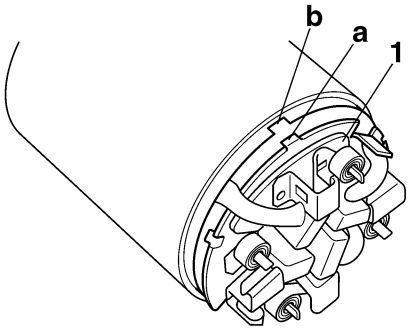

2. Install:
   - Starter motor yoke
   - Starter motor front cover
   - Starter motor rear cover

TIP

Align the match marks “a” on the starter motor yoke with the match marks “b” on the front and starter motor rear covers.

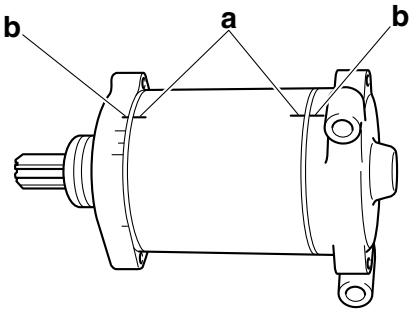

EAS25061

CLUTCH

Removing the clutch cover

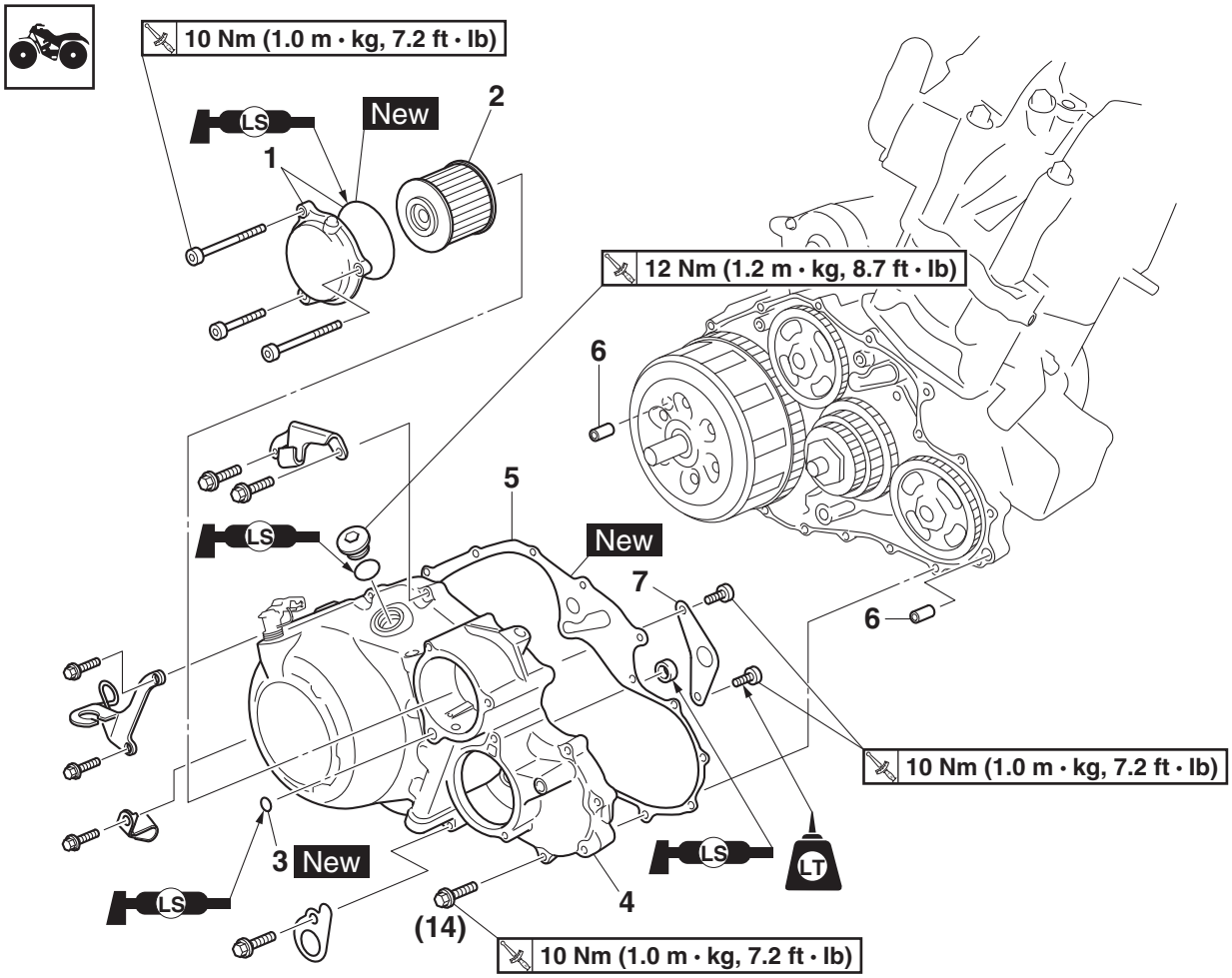

Order	Job/Parts to remove	Q'ty	Remarks
	Engine oil		Drain.
	Front fender		Refer to "GENERAL CHASSIS" on page 4-1.
	Rear brake light switch/right foot rest/brake pedal/spring		Refer to "REAR BRAKE" on page 4-28.
	Oil delivery pipe		Refer to "CYLINDER HEAD" on page 5-8.
1	Oil filter cover/O-ring	1/1	
2	Oil filter	1	
3	O-ring	1	
4	Clutch cover	1	
5	Clutch cover gasket	1	
6	Dowel pin	2	
7	Oil seal retainer	1	
			For installation, reverse the removal procedure.

Removing the pull lever shaft

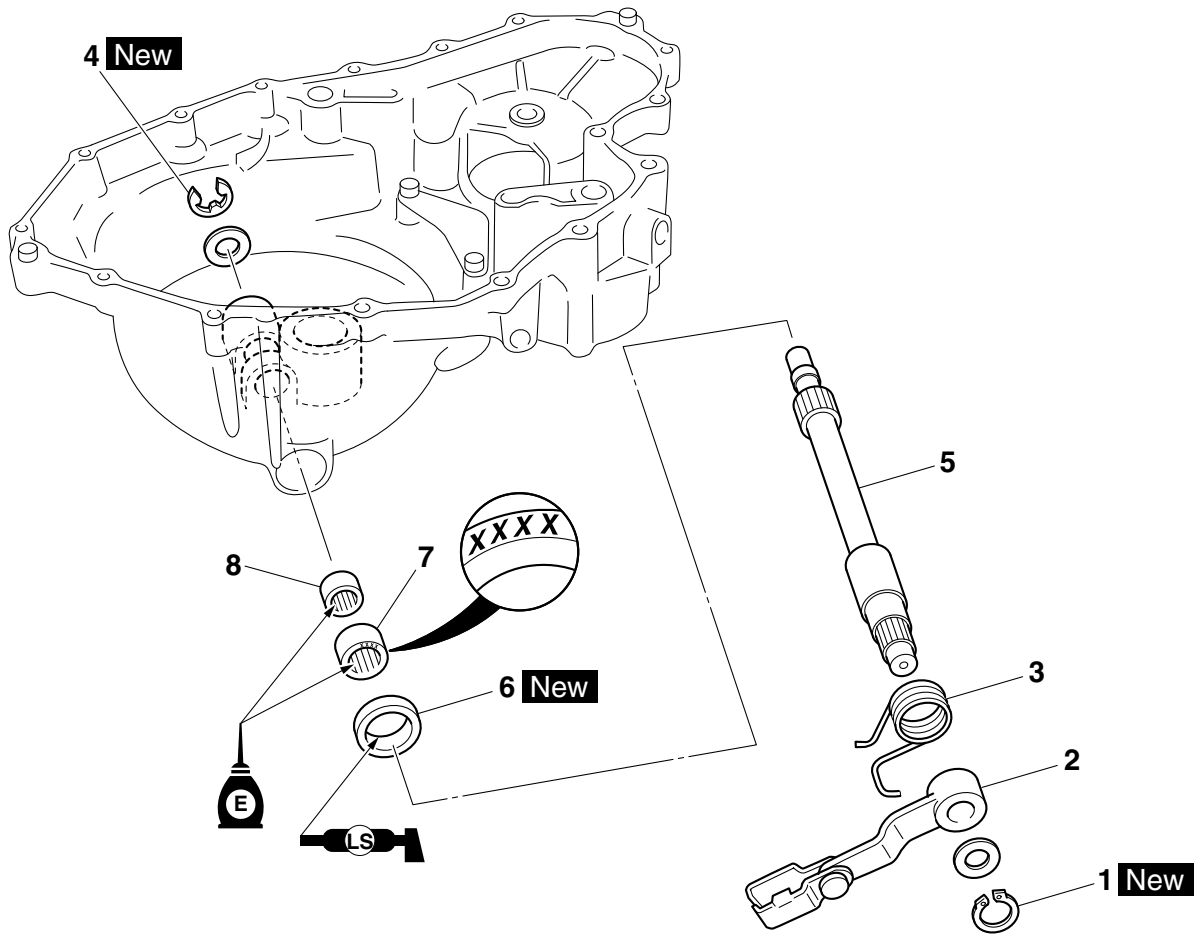

Order	Job/Parts to remove	Q'ty	Remarks
1	Circlip	1	
2	Pull lever	1	
3	Pull lever spring	1	
4	Circlip	1	
5	Pull lever shaft	1	
6	Oil seal	1	
7	Bearing	1	
8	Bearing	1	
			For installation, reverse the removal procedure.

Removing the clutch

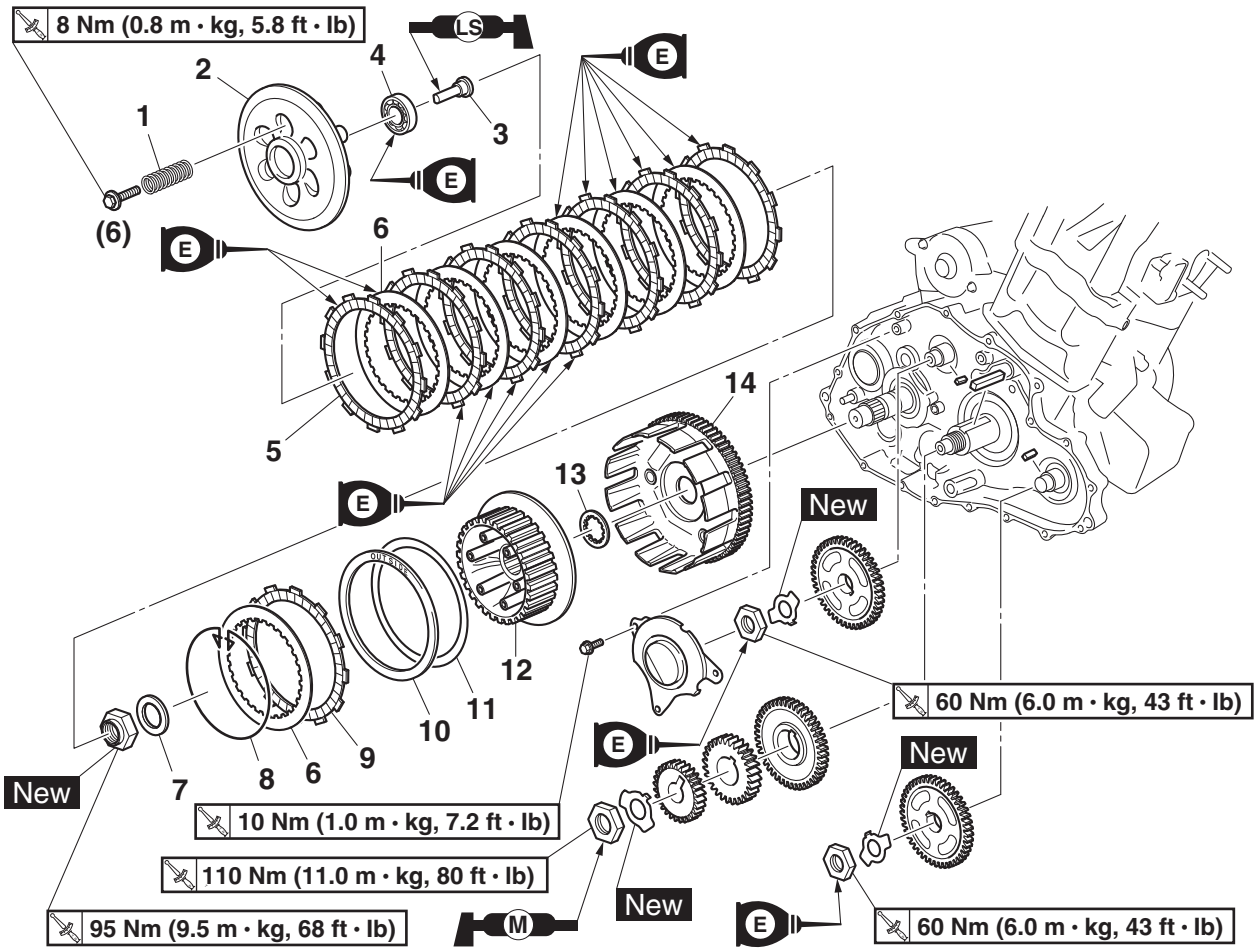

Order	Job/Parts to remove	Q'ty	Remarks
1	Clutch spring	6	
2	Pressure plate	1	
3	Pull rod	1	
4	Bearing	1	
5	Friction plate 1	7	
6	Clutch plate	7	
7	Conical spring washer	1	
8	Wire circlip	1	
9	Friction plate 2	1	
10	Clutch damper spring	1	
11	Clutch damper spring seat	1	
12	Clutch boss	1	
13	Thrust washer	1	
14	Clutch housing	1	

Removing the clutch

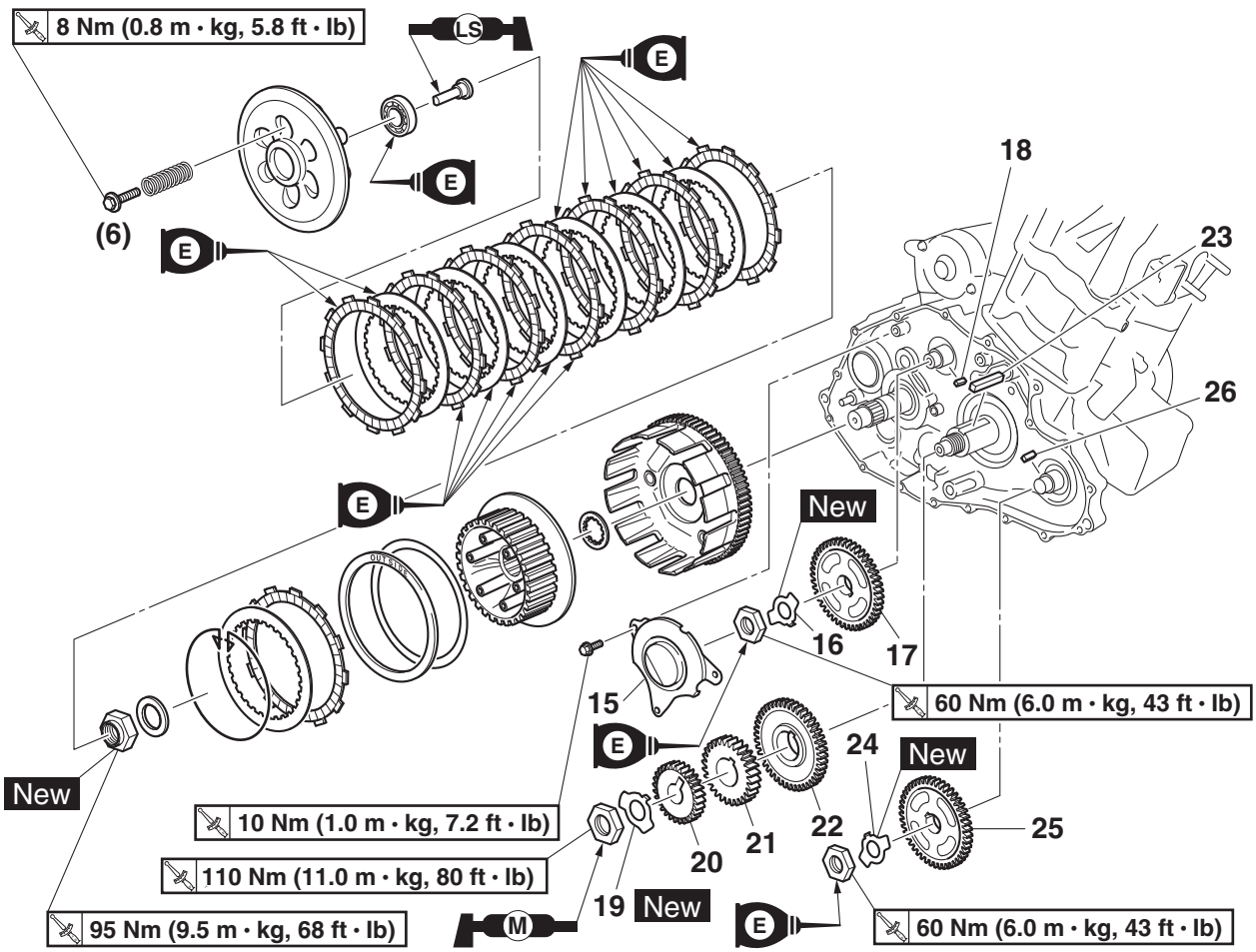

Order	Job/Parts to remove	Q'ty	Remarks
15	Breather plate	1	
16	Lock washer	1	
17	Balancer driven gear 1	1	
18	Straight key	1	
19	Lock washer	1	
20	Water pump drive gear	1	
21	Primary drive gear	1	
22	Balancer drive gear	1	
23	Straight key	1	
24	Lock washer	1	
25	Balancer driven gear 2	1	
26	Straight key	1	
			For installation, reverse the removal procedure.

EAS25070

REMOVING THE CLUTCH

1. Remove:
   - Clutch cover

TIP

Loosen each bolt 1/4 of a turn at a time, in stages and in a crisscross pattern. After all of the bolts are fully loosened, remove them.

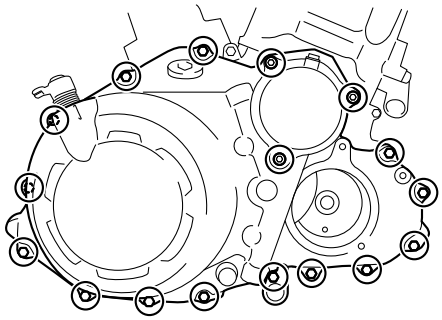

2. Straighten the clutch boss nut staked point "a".
3. Loosen:
   - Clutch boss nut "1"

TIP

While holding the clutch boss "2" with the universal clutch holder "3", loosen the clutch boss nut.

Universal clutch holder
90890-04086
Universal clutch holder
YM-91042

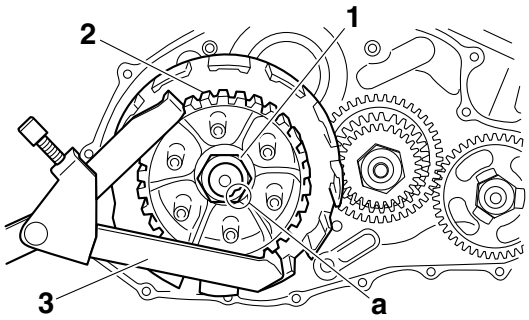

4. Remove:
   - Clutch boss nut "1"
   - Conical spring washer "2"
   - Clutch boss assembly "3"

TIP

There is a built-in damper between the clutch boss and the clutch plate. It is not necessary to remove the wire circlip "4" and disassemble the built-in damper unless there is serious clutch chattering.

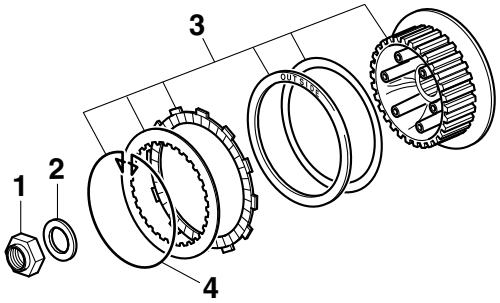

EAS1S3L030

REMOVING THE PRIMARY DRIVE GEAR AND BALANCER DRIVEN GEAR

1. Straighten the lock washer tabs.
2. Remove:
   - Balancer driven gear 1 nut "1"
   - Primary drive gear nut "2"
   - Balancer driven gear 2 nut "3"

TIP

- Place an aluminum plate "4" between the teeth of the balancer driven gear 1 "5" and balancer drive gear "6", then loosen the nut "1".
- Place an aluminum plate "4" between the teeth of the balancer driven gear 2 "7" and balancer drive gear "6", then loosen the nut "3".
- Place an aluminum plate "4" between the teeth of the balancer drive gear "6" and balancer driven gear 2 "7", then loosen the nut "2".

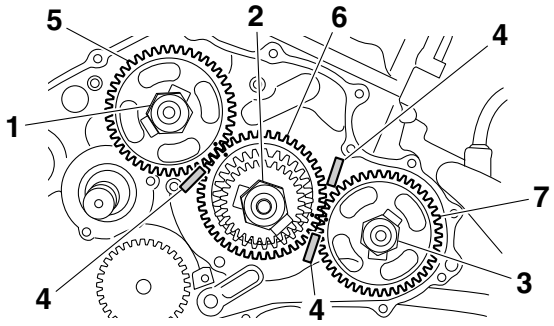

EAS25100

CHECKING THE FRICTION PLATES

The following procedure applies to all of the friction plates.

1. Check:
   - Friction plate
     Damage/wear → Replace the friction plates as a set.
2. Measure:
   - Friction plate thickness
     Out of specification → Replace the friction plates as a set.

TIP

Measure the friction plate at four places.

Friction plate 1 thickness
2.92–3.08 mm (0.11–0.12 in)
Wear limit
2.82 mm (0.111 in)
Friction plate 2 thickness
2.90–3.10 mm (0.11–0.12 in)
Wear limit
2.8 mm (0.11 in)

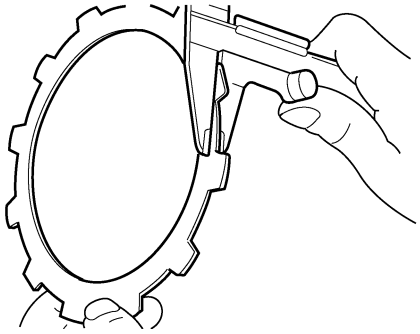

EAS25110

CHECKING THE CLUTCH PLATES

The following procedure applies to all of the clutch plates.

1. Check:
   - Clutch plate
     Damage → Replace the clutch plates as a set.
2. Measure:
   - Clutch plate warpage
     (with a surface plate and thickness gauge “1”)
     Out of specification → Replace the clutch plates as a set.

Warpage limit
0.20 mm (0.0079 in)

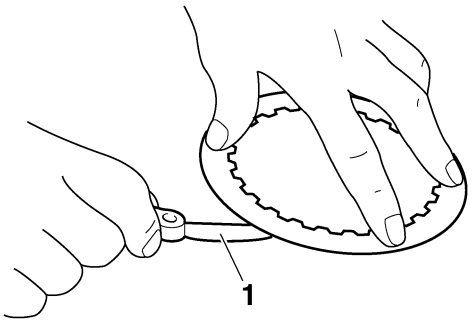

EAS25140

CHECKING THE CLUTCH SPRINGS

The following procedure applies to all of the clutch springs.

1. Check:
   - Clutch spring
     Damage → Replace the clutch springs as a set.
2. Measure:
   - Clutch spring free length “a”
     Out of specification → Replace the clutch springs as a set.

Clutch spring free length
50.0 mm (1.97 in)
Minimum length
48.0 mm (1.89 in)

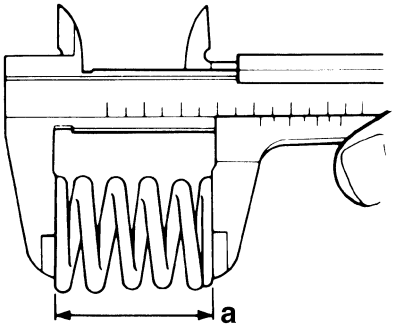

EAS25150

CHECKING THE CLUTCH HOUSING

1. Check:
   - Clutch housing dogs
     Damage/pitting/wear → Deburr the clutch housing dogs or replace the clutch housing.

TIP

Pitting on the clutch housing dogs will cause erratic clutch operation.

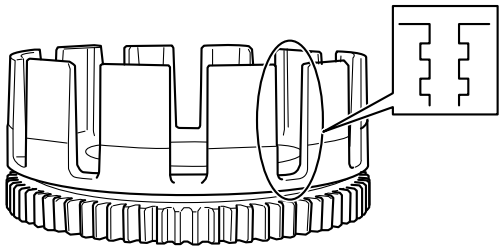

EAS25160

CHECKING THE CLUTCH BOSS

1. Check:
   - Clutch boss splines
     Damage/pitting/wear → Replace the clutch boss.

TIP

Pitting on the clutch boss splines will cause erratic clutch operation.

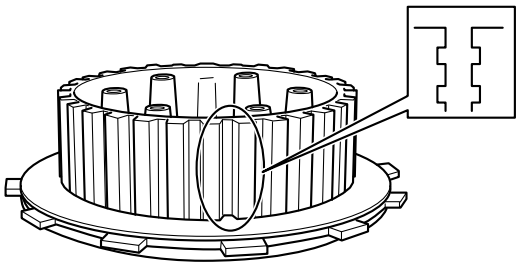

EAS25170
CHECKING THE PRESSURE PLATE
1. Check:
   - Pressure plate
     Cracks/damage → Replace.

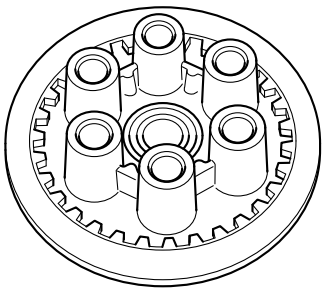

EAS25200
CHECKING THE PRIMARY DRIVE GEARS
1. Check:
   - Primary drive gear “1”
   - Primary driven gear “2”
     Damage/wear → Replace the primary drive gear and clutch housing as a set.
     Excessive noise during operation → Replace the primary drive gear and clutch housing as a set.

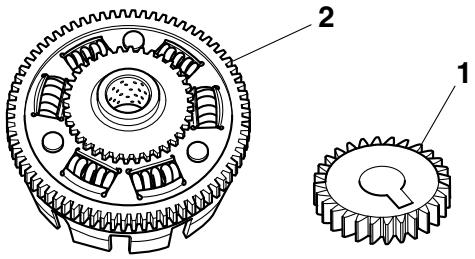

EAS1S3L031
CHECKING THE BALANCER DRIVE GEARS
1. Check:
   - Balancer drive gear “1”
   - Balancer driven gear 1 “2”
   - Balancer driven gear 2 “3”
   - Water pump drive gear “4”
     Damage/wear → Replace the balancer drive gear and balancer driven gear as a set.
     Replace the water pump drive gear and water pump driven gear as a set.
     Excessive noise during operation → Replace the balancer drive gear and balancer driven gear as a set.
     Replace the water pump drive gear and water pump driven gear as a set.

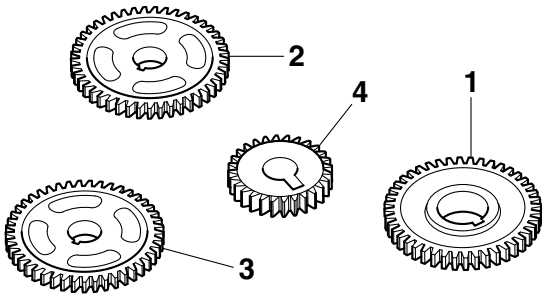

EAS25220
CHECKING THE PULL LEVER SHAFT AND PULL ROD
1. Check:
   - Pull lever shaft pinion gear teeth “a”
   - Pull rod teeth “b”
     Damage/wear → Replace the pull rod and pull lever shaft pinion gear as a set.

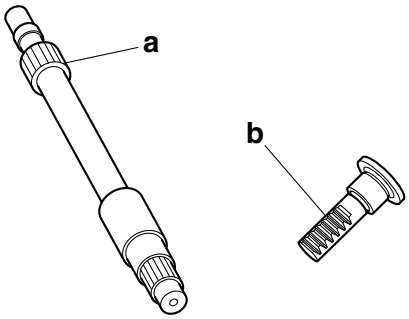

2. Check:
   - Pull rod bearing
     Damage/wear → Replace.

EAS1S3L032
INSTALLING THE PRIMARY DRIVE GEAR AND BALANCER DRIVEN GEARS
1. Install:
   - Balancer drive gear
   - Primary drive gear
   - Water pump drive gear
   - Balancer driven gear 1
   - Balancer driven gear 2

TIP

- Align the punch mark “a” on the balancer drive gear with the punch mark “b” on the balancer driven gear 2.
- Align the punch mark “c” on the balancer drive gear with the punch mark “d” on the balancer driven gear 1.

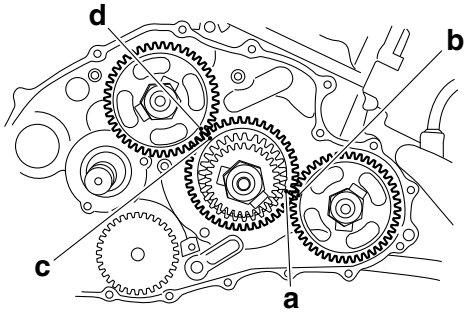

2. Tighten:
   - Balancer driven gear 2 nut “1”
   - Primary drive gear nut “2”
   - Balancer driven gear 1 nut “3”

Balancer driven gear 2 nut
60 Nm (6.0 m·kg, 43 ft·lb)
Primary drive gear nut
110 Nm (11.0 m·kg, 80 ft·lb)
Balancer driven gear 1 nut
60 Nm (6.0 m·kg, 43 ft·lb)

TIP

- Apply engine oil to the balancer threads.
- Apply molybdenum disulfide grease to the crankshaft and nut “2” threads.
- Place an aluminum plate “4” between the teeth of the balancer driven gear 2 “5” and balancer drive gear “6”, then tighten the nut “1”.
- Place an aluminum plate “4” between the teeth of the balancer driven gear 2 “5” and balancer drive gear “6”, then tighten the nut “2”.
- Place an aluminum plate “4” between the teeth of the balancer drive gear “6” and balancer driven gear 1 “7”, then tighten the nut “3”.

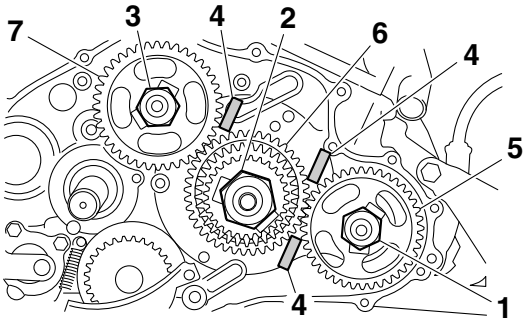

3. Bend the lock washer tabs along a flat side of the nut.

EAS25240

INSTALLING THE CLUTCH

1. Install:
   - Clutch housing “1”

TIP

- Make sure that the primary driven gear teeth and primary drive gear teeth mesh correctly.
- Make sure that the oil pump drive gear teeth and oil pump driven gear teeth mesh correctly.

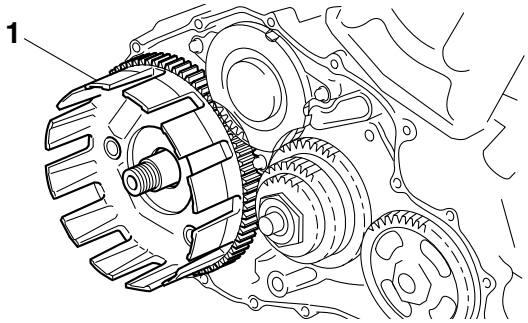

2. Install:
   - Clutch boss assembly “1”

TIP

- If the wire circlip “2” has been removed, carefully install a new one.
- Install the clutch damper spring “3” with the “OUTSIDE” mark facing out.

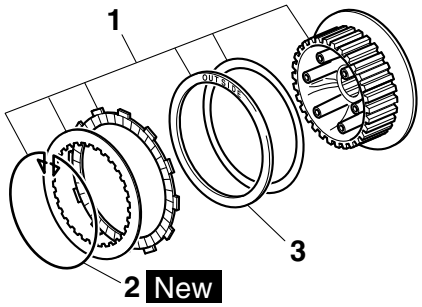

3. Install:
   - Clutch boss “1”
   - Conical spring washer “2”
   - Clutch boss nut “3” New

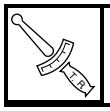

Clutch boss nut
95 Nm (9.5 m·kg, 68 ft·lb)

TIP

- Install the washer “2” with the “OUT” mark “a” facing out.

- While holding the clutch boss “1” with the universal clutch holder “4”, tighten the clutch boss nut.
- Stake the clutch boss nut “3” at a cutout “b” in the main axle.

	**Universal clutch holder** **90890-04086** **Universal clutch holder** **YM-91042**

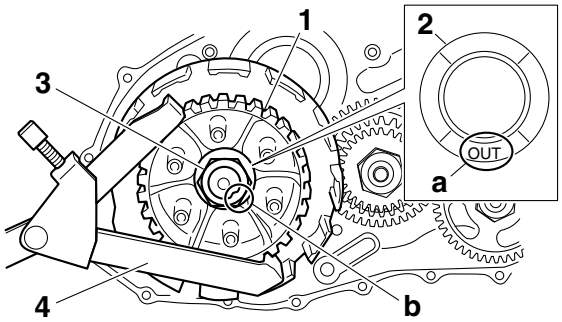

4. Install:
   - Clutch springs

	**Clutch spring bolt** **8 Nm (0.8 m·kg, 5.8 ft·lb)**

TIP

Tighten the clutch spring bolts in stages and in a crisscross pattern.

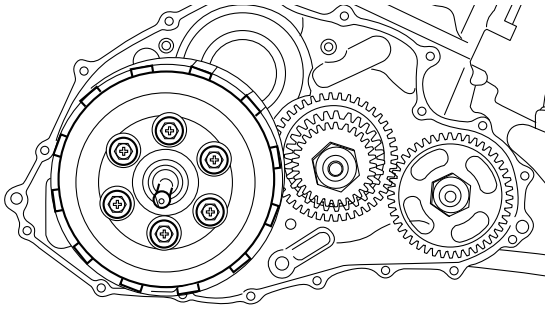

5. Install:
   - Clutch cover

	**Clutch cover bolt** **10 Nm (1.0 m·kg, 7.2 ft·lb)**

TIP

- Position the pull rod so that the teeth face towards the rear of the vehicle and then install the clutch cover.
- Tighten the clutch cover bolts in stages and in a crisscross pattern.

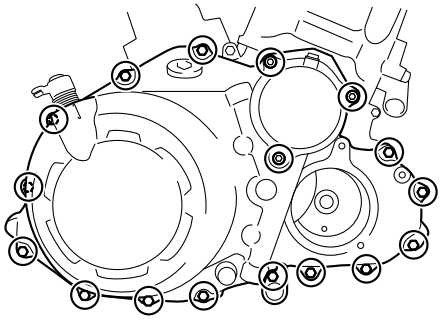

6. Install:
   - Pull lever spring “1”
   - Pull lever “2”
   - Washer
   - Circlip New

TIP

- Install the pull lever with the “UP” mark facing up.
- Align the mark “a” on the pull lever with the stationary pointer “b” on the clutch cover.
- Install the pull lever spring “1” as shown.

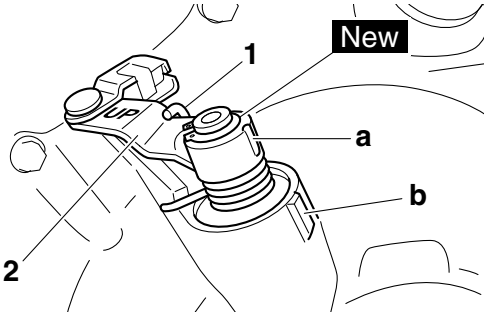

7. Install:
   - Clutch cable “1”
8. Check:
   - Clutch cable length “a”
     Out of specification → Adjust.

TIP

- Push the pull lever in direction “b” and check the cable length “a”.
- Bend the tab “c” on the pull lever to secure the clutch cable.

	**Clutch cable length** **67–76 mm (2.64–2.99 in)**

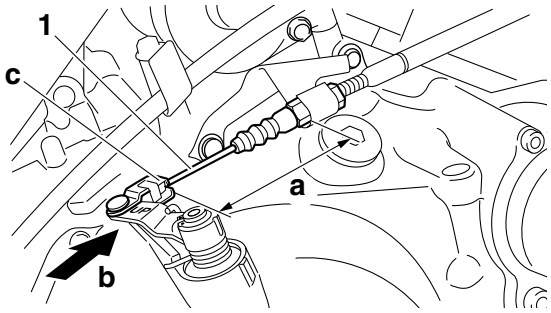

9. Adjust:
   - Clutch cable length

TIP

Move the pull lever a notch until the cable length is within specification.

10. Adjust:
    - Clutch lever free play
      Refer to “ADJUSTING THE CLUTCH LEVER FREE PLAY” on page 3-12.

EAS24911

OIL PUMP

Removing the oil pump

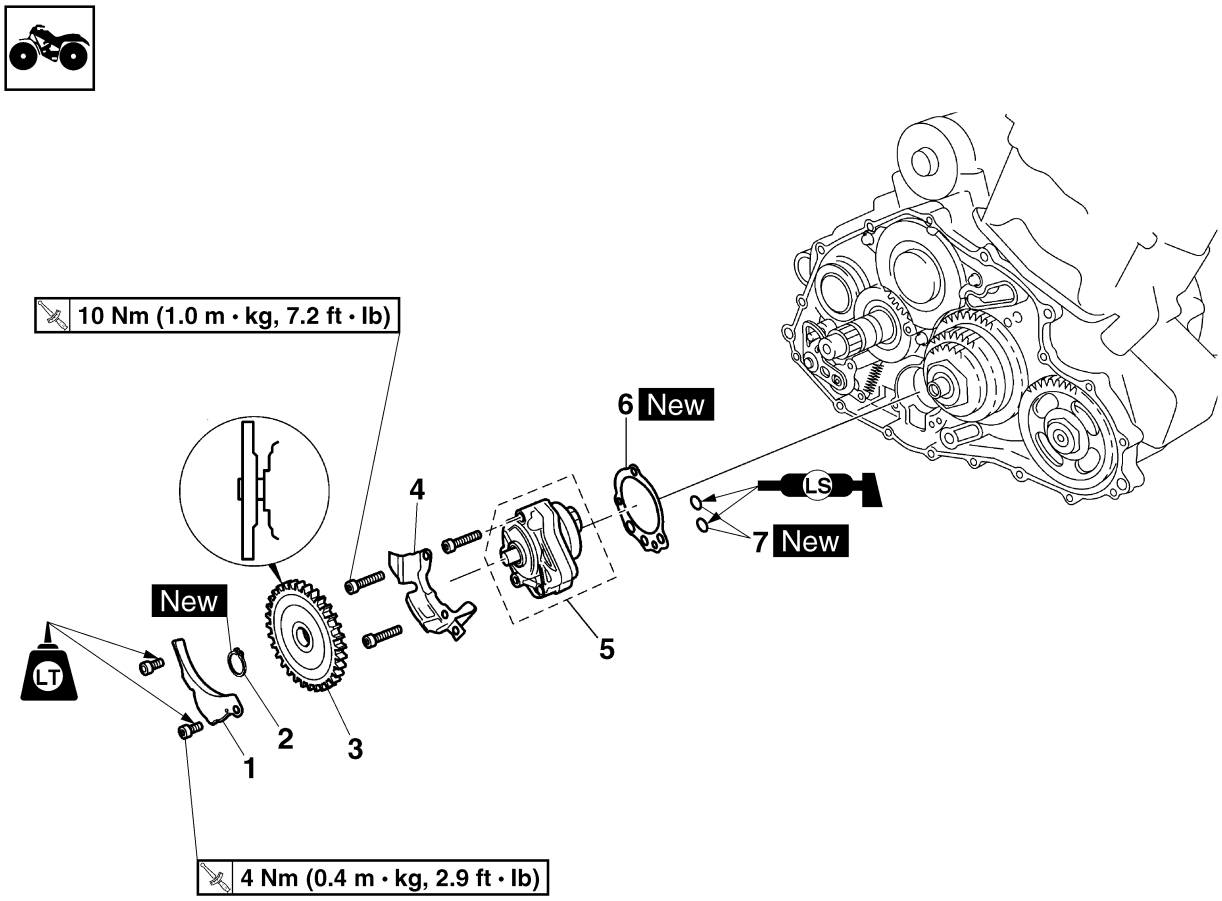

Order	Job/Parts to remove	Q'ty	Remarks
	Clutch housing		Refer to "CLUTCH" on page 5-40.
1	Oil baffle plate 1	1	
2	Circlip	1	
3	Oil pump driven gear	1	
4	Oil baffle plate 2	1	
5	Oil pump	1	
6	Oil pump gasket	1	
7	O-ring	2	
			For installation, reverse the removal procedure.

Disassembling the oil pump

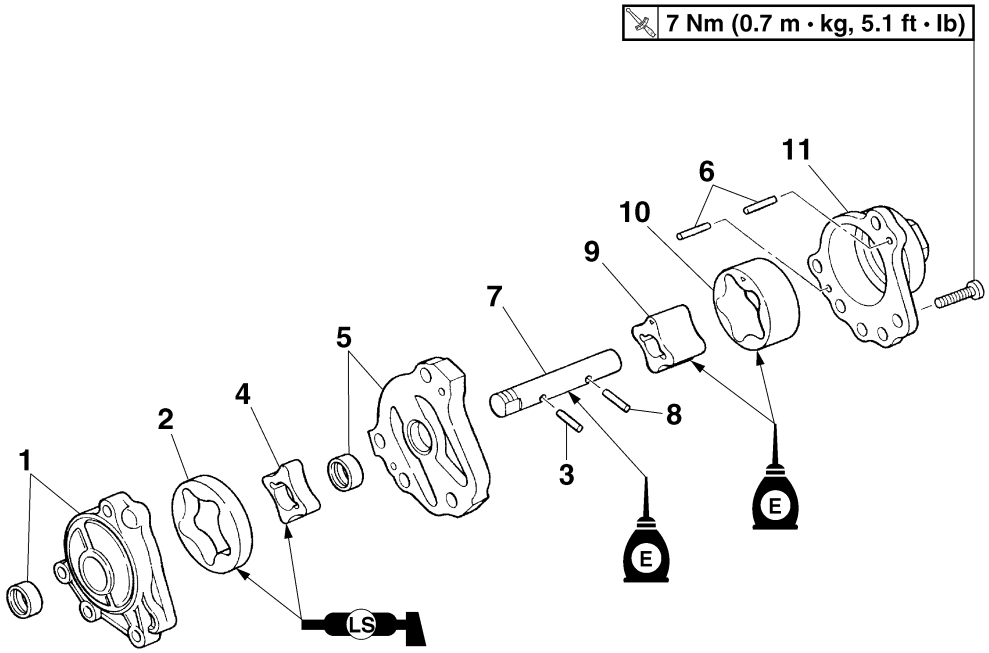

Order	Job/Parts to remove	Q'ty	Remarks
1	Oil pump housing 1/oil seal	1/1	
2	Oil pump outer rotor 1	1	
3	Dowel pin	1	
4	Oil pump inner rotor 1	1	
5	Oil pump housing cover/oil seal	1/1	
6	Dowel pin	2	
7	Oil pump shaft	1	
8	Dowel pin	1	
9	Oil pump inner rotor 2	1	
10	Oil pump outer rotor 2	1	
11	Oil pump housing 2	1	
			For assembly, reverse the disassembly procedure.

EAS24960
CHECKING THE OIL PUMP

1. Check:
   - Oil pump driven gear “1”
   - Oil pump housing 1 “2”
   - Oil pump housing cover “3”
   - Oil pump housing 2 “4”
     Cracks/damage/wear → Replace the defective part(s).

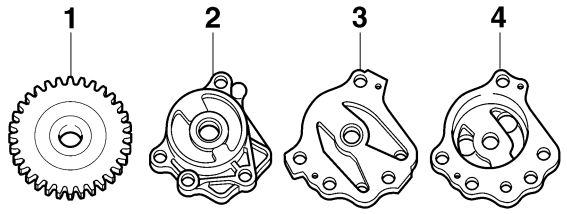

2. Measure:
   - Inner-rotor-to-outer-rotor-tip clearance “a”
   - Outer-rotor-to-oil-pump-housing clearance “b”
     Out of specification → Replace the oil pump.

	Inner-rotor-to-outer-rotor-tip clearance **0.12 mm (0.0047 in)** **Limit** **0.20 mm (0.0079 in)** **Outer-rotor-to-oil-pump-housing clearance** **0.090–0.150 mm (0.0035–0.0059 in)** **Limit** **0.22 mm (0.0087 in)**

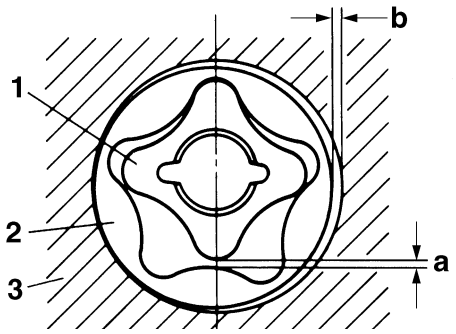

1. Inner rotor
2. Outer rotor
3. Oil pump housing

3. Check:
   - Oil pump operation
     Rough movement → Repeat steps (1) and (2) or replace the defective part(s).

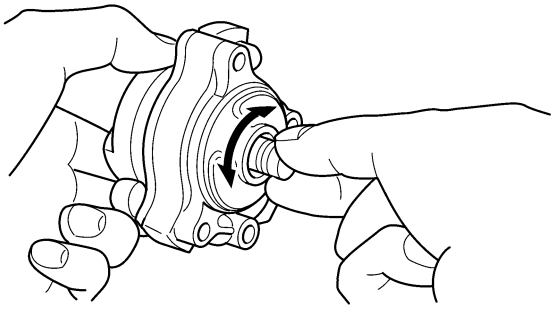

EAS25000
ASSEMBLING THE OIL PUMP

1. Lubricate:
   - Inner rotor
   - Outer rotor
   - Oil pump shaft
     (with the recommended lubricant)

	Recommended lubricant **Engine oil**

2. Install:
   - Oil pump outer rotor 2 “1”
   - Oil pump inner rotor 2 “2”
     (to the oil pump housing 2)
   - Oil pump housing

	Oil pump housing screw **7 Nm (0.7 m·kg, 5.1 ft·lb)**

TIP

Align the match mark “a” on the inner rotor 2 with the match mark “b” on the outer rotor 2.

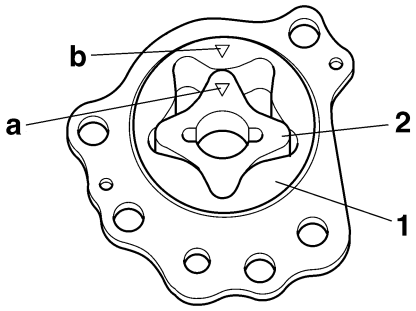

3. Check:
   - Oil pump operation
     Refer to “CHECKING THE OIL PUMP” on page 5-52.

EAS25410

SHIFT SHAFT

Removing the shift shaft and stopper lever

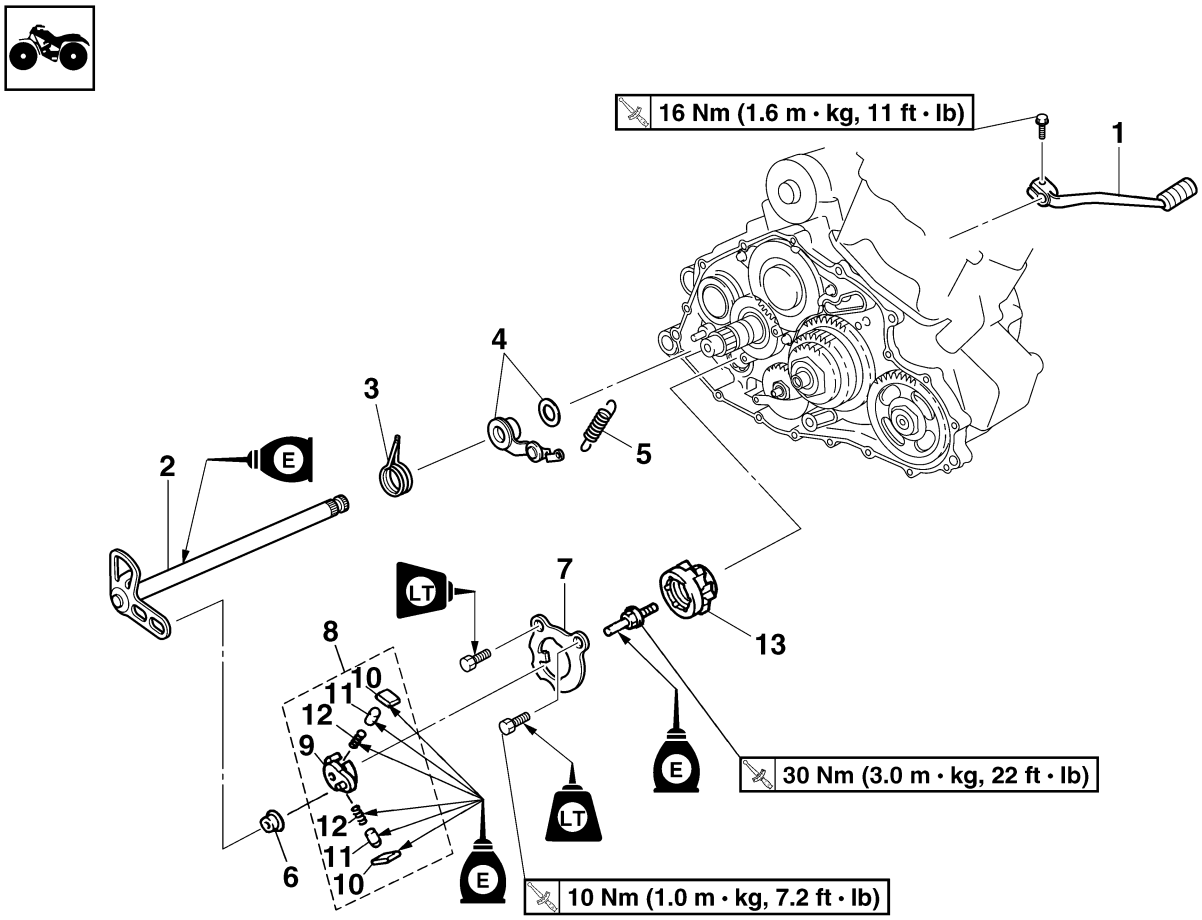

Order	Job/Parts to remove	Q'ty	Remarks
	Clutch housing		Refer to "CLUTCH" on page 5-40.
1	Shift pedal	1	
2	Shift shaft	1	
3	Shift shaft spring	1	
4	Stopper lever/washer	1/1	
5	Stopper lever spring	1	
6	Roller	1	
7	Shift guide	1	
8	Shift lever assembly	1	
9	Pawl holder	1	
10	Pawl	2	
11	Pawl pin	2	
12	Spring	2	
13	Shift drum segment	1	
			For installation, reverse the removal procedure.

EAS25420
CHECKING THE SHIFT SHAFT
1. Check:
   - Shift shaft “1”
     Bends/damage/wear → Replace.
   - Shift lever spring “2”
     Damage/wear → Replace.

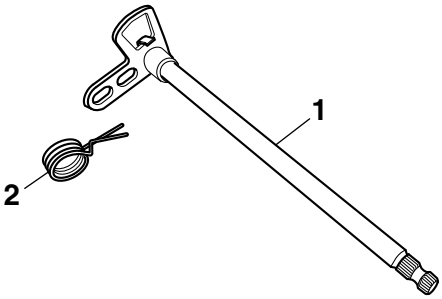

EAS25430
CHECKING THE STOPPER LEVER
1. Check:
   - Stopper lever “1”
     Bends/damage → Replace.
     Roller turns roughly → Replace the stopper lever.
   - Stopper lever spring “2”
     Damage/wear → Replace.

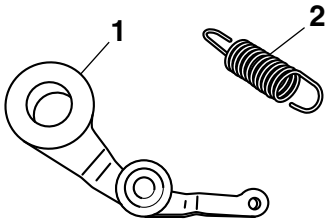

EAS1S3L033
CHECKING THE SHIFT GUIDE
1. Check:
   - Shift guide “1”
   - Pawl holder “2”
   - Pawls “3”
   - Pawl pins “4”
   - Springs “5”
     Wear/cracks/damage → Replace.

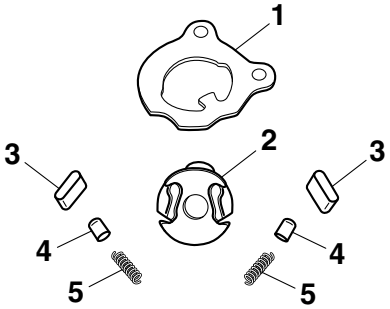

EAS1S3L034
CHECKING THE SHIFT DRUM SEGMENT
1. Check:
   - Shift drum segment
     Damage/wear → Replace.

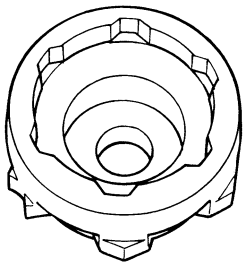

EAS1S3L035
INSTALLING THE SHIFT LEVER
1. Install:
   - Shift drum segment “1”
   - Shift drum segment bolt

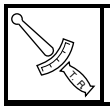	**Shift drum segment bolt** **30 Nm (3.0 m·kg, 22 ft·lb)**

TIP

Align the notch “a” on the shift drum segment with the pin “b” on the shift drum.

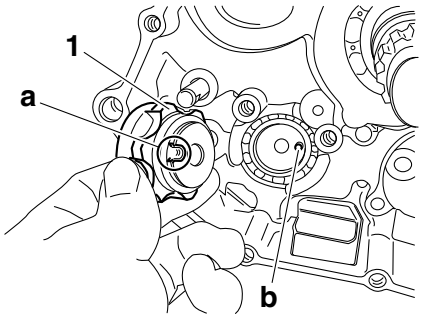

2. Install:
   - Springs “1”
   - Pawl pins “2”
   - Pawls “3”
   - Shift guide “4”
     (to the pawl holder)

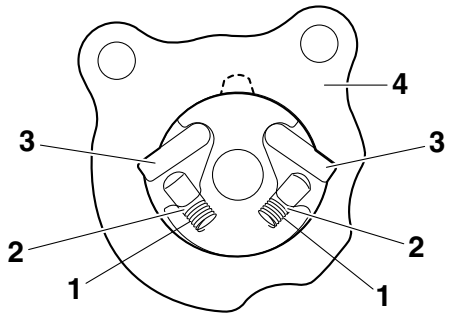

3. Install:
   - Shift lever assembly “1”
   - Shift guide “2”

	**Shift guide bolt** **10 Nm (1.0 m·kg, 7.2 ft·lb)** **LOCTITE®**

TIP

The shift lever assembly is installed at the same time as the shift guide.

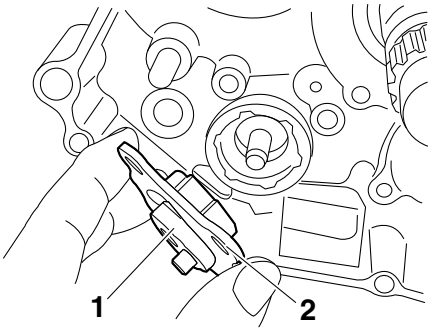

EAS25450

INSTALLING THE SHIFT SHAFT

1. Install:
   - Stopper lever “1”
   - Stopper lever spring “2”
   - Shift shaft “3”
   - Roller “4”
   - Shift shaft spring

TIP

- Hook the ends of the stopper lever spring onto the stopper lever and the crankcase boss “5”.
- Install the end of the shift shaft spring onto the shift shaft spring stopper “6”.
- Install the end of the shift shaft lever onto the roller “4”.

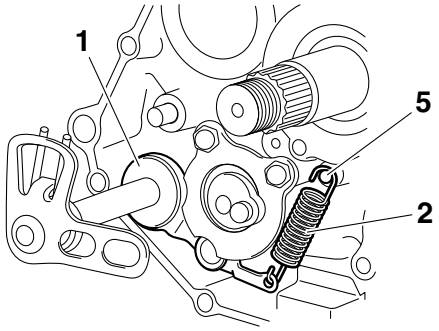

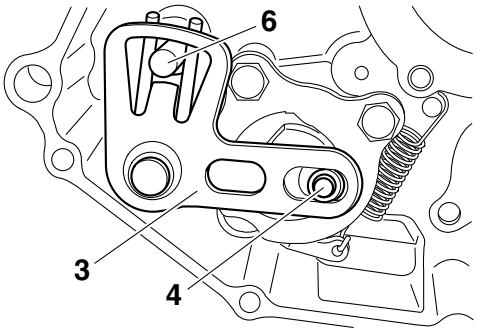

2. Install:
   - Shift pedal
     Refer to “ADJUSTING THE SHIFT PEDAL” on page 3-23.

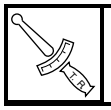	**Shift pedal bolt** **16 Nm (1.6 m·kg, 11 ft·lb)**

EAS25540

CRANKCASE

Separating the crankcase

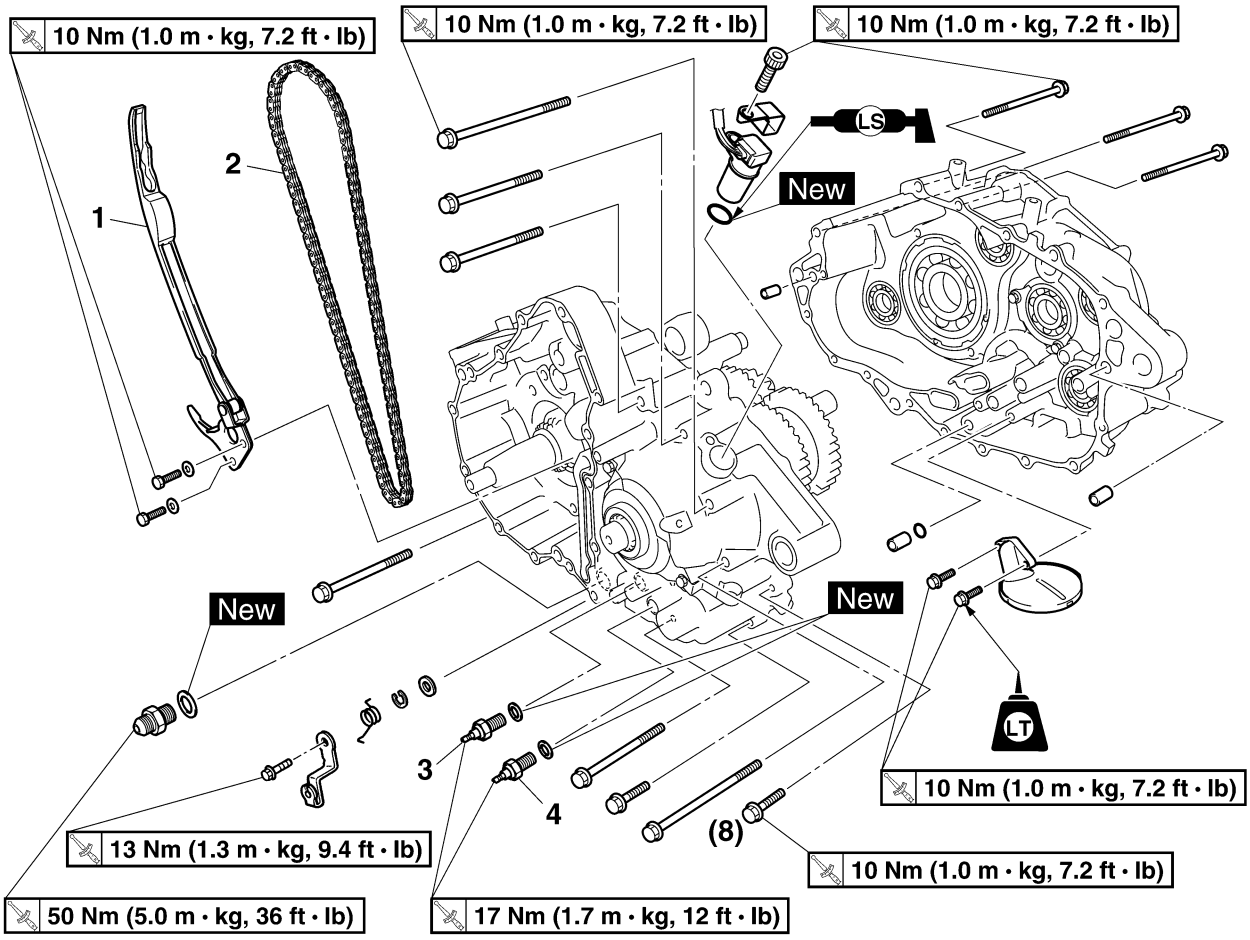

Order	Job/Parts to remove	Q'ty	Remarks
	Engine assembly		Refer to "ENGINE REMOVAL" on page 5-1.
	Piston		Refer to "CYLINDER AND PISTON" on page 5-26.
	AC magneto		Refer to "AC MAGNETO AND STARTER CLUTCH" on page 5-31.
	Balancer driven gears		Refer to "CLUTCH" on page 5-40.
	Oil pump		Refer to "OIL PUMP" on page 5-50.
	Shift drum segment		Refer to "SHIFT SHAFT" on page 5-53.
	Starter motor		Refer to "ELECTRIC STARTER" on page 5-36.
1	Timing chain guide (intake side)	1	
2	Timing chain	1	
3	Neutral switch	1	
4	Reverse switch	1	

Separating the crankcase

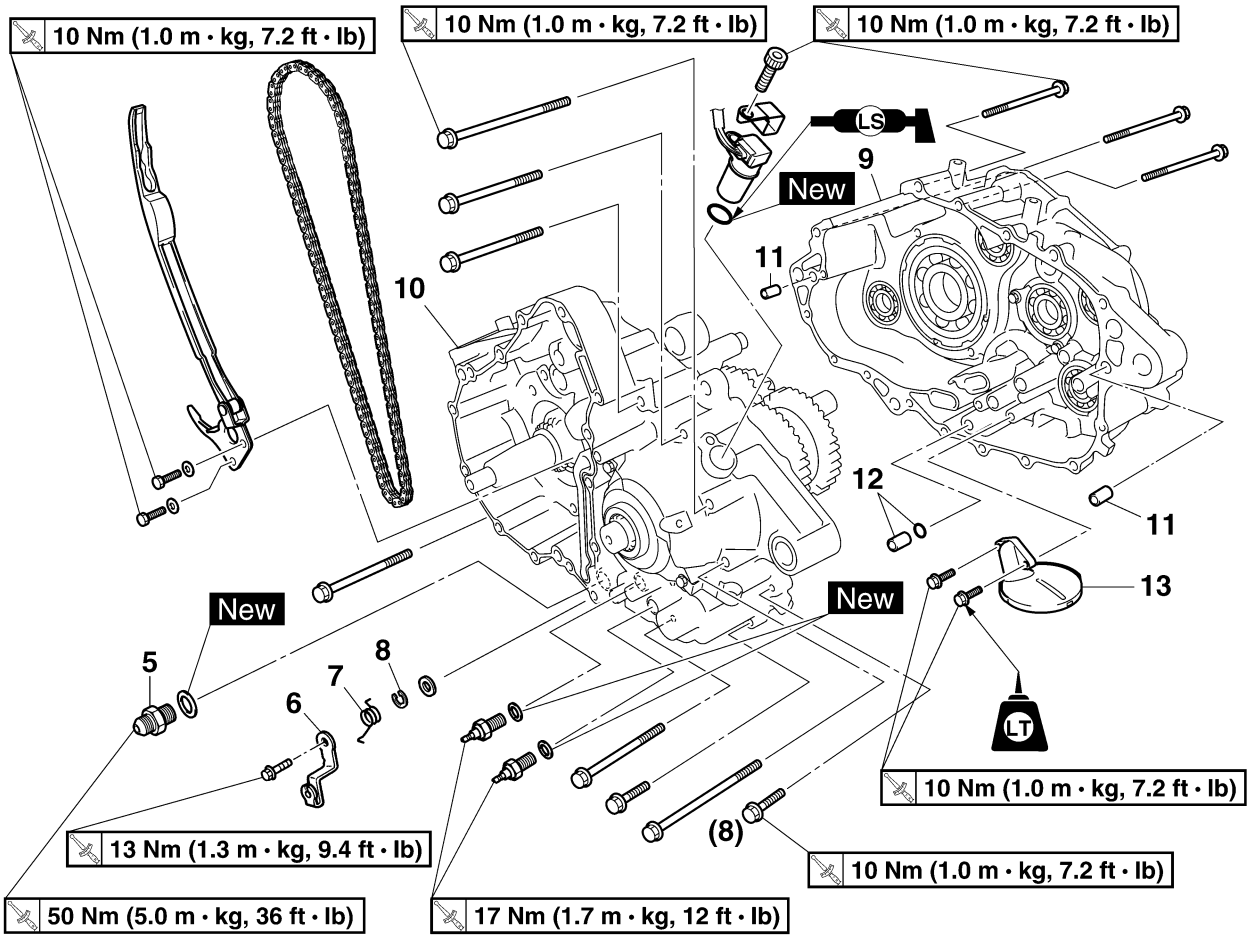

Order	Job/Parts to remove	Q'ty	Remarks
5	Oil pipe joint	1	
6	Reverse shift lever	1	
7	Reverse shift lever spring	1	
8	Circlip	1	
9	Right crankcase	1	
10	Left crankcase	1	
11	Dowel pin	2	
12	Dowel pin/O-ring	1/1	
13	Oil strainer	1	
			For installation, reverse the removal procedure.

Removing the crankcase bearings

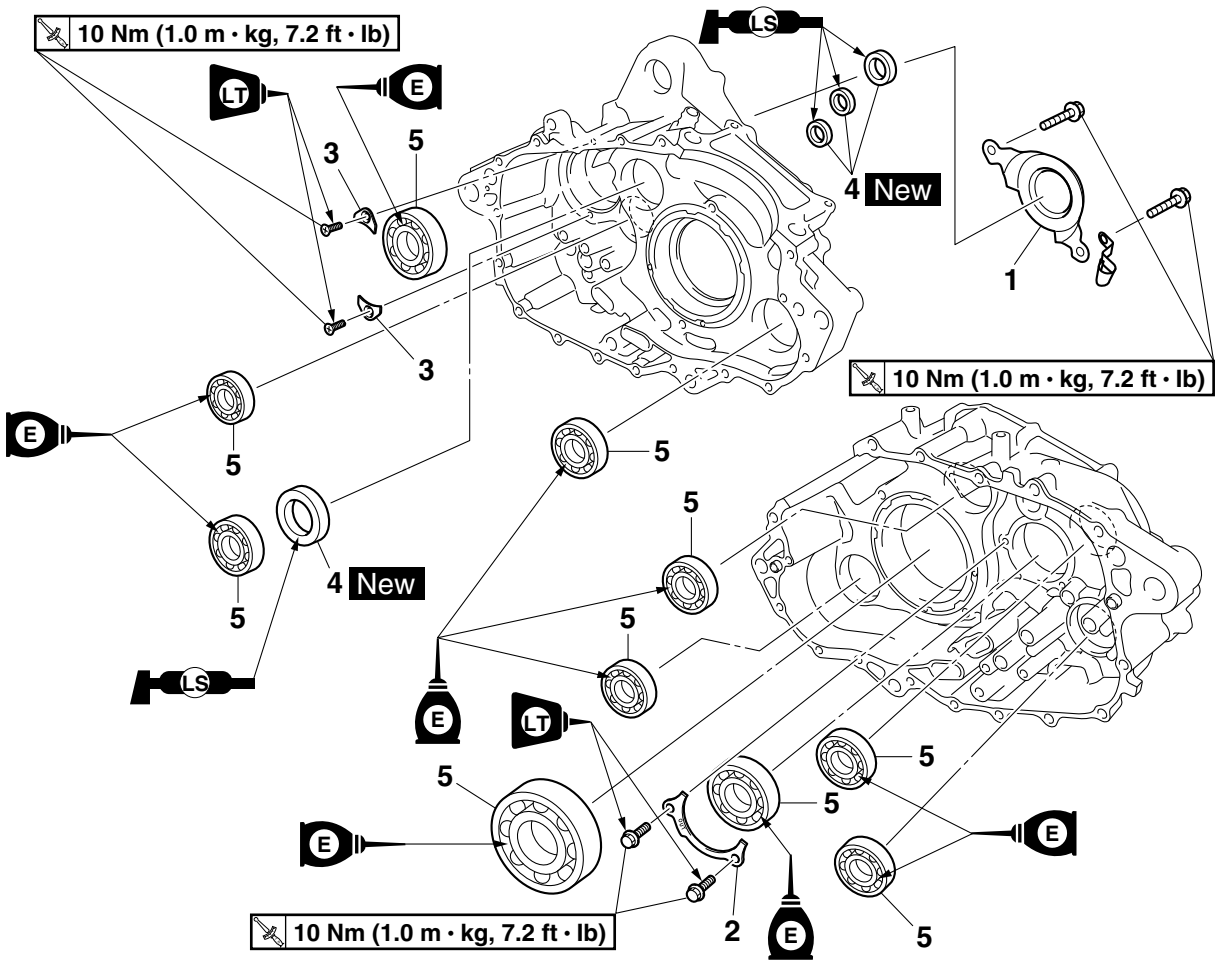

Order	Job/Parts to remove	Q'ty	Remarks
	Crankshaft		Refer to "CRANKSHAFT" on page 5-62.
	Transmission		Refer to "TRANSMISSION" on page 5-65.
1	Oil seal retainer	1	
2	Bearing retainer	1	
3	Bearing retainer	2	
4	Oil seal	4	
5	Bearing	10	
			For installation, reverse the removal procedure.

EAS1S3L036
SEPARATING THE CRANKCASE
1. Remove:
   - Crankcase bolts

TIP

Loosen each bolt 1/4 of a turn at a time, in stages and in a crisscross pattern. After all of the bolts are fully loosened, remove them.

A

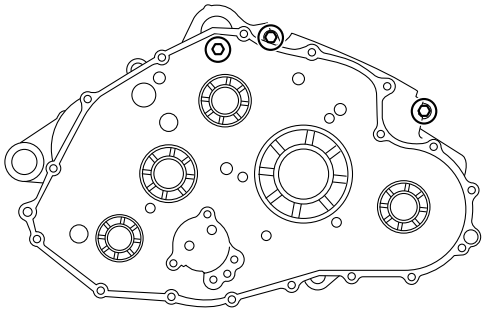

B

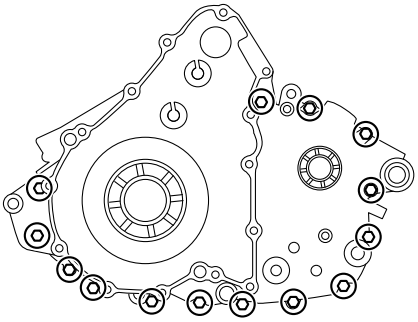

A. Right crankcase
B. Left crankcase

2. Remove:
   - Right crankcase
   - Dowel pins
   - O-ring

ECA13900

NOTICE

Tap on one side of the crankcase with a soft-face hammer. Tap only on reinforced portions of the crankcase, not on the crankcase mating surfaces. Work slowly and carefully and make sure the crankcase halves separate evenly.

EAS1S3L023
CHECKING THE TIMING CHAIN AND TIMING CHAIN GUIDE
1. Check:
   - Timing chain
     Damage/stiffness → Replace the timing chain and camshaft sprockets as a set.

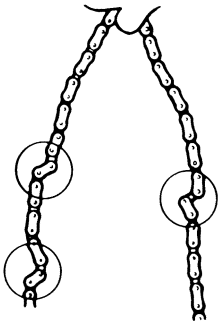

2. Check:
   - Timing chain guide (intake side)
     Damage/wear → Replace the defective part(s).

EAS24990
CHECKING THE OIL STRAINER
1. Check:
   - Oil strainer
     Damage → Replace.
     Contaminants → Clean with solvent.

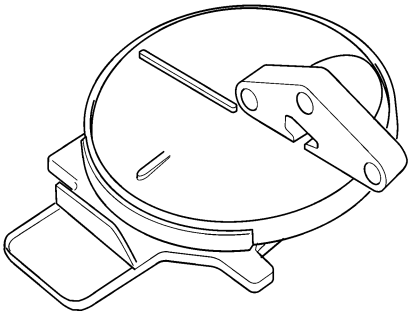

EAS1S3L037
CHECKING THE BEARINGS AND OIL SEALS
1. Check:
   - Bearings
     Clean and lubricate, then rotate the inner race with a finger.
     Roughness → Replace.

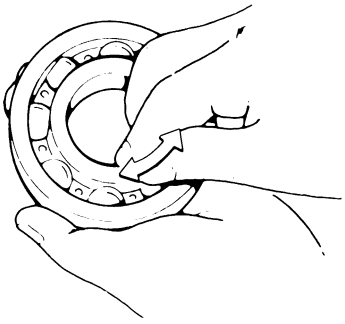

2. Check:
   - Oil seals
     Damage/wear → Replace.

EAS25580
CHECKING THE CRANKCASE
1. Thoroughly wash the crankcase halves in a mild solvent.
2. Thoroughly clean all the gasket surfaces and crankcase mating surfaces.
3. Check:
   - Crankcase
     Cracks/damage → Replace.
   - Oil delivery passages
     Obstruction → Blow out with compressed air.

EAS25700
ASSEMBLING THE CRANKCASE
1. Install:
   - Bearings New
   - Bearing retainers
   - Bearing retainer bolts “1”
   - Bearing retainer screws “2”

Bearing retainer bolt
10 Nm (1.0 m·kg, 7.2 ft·lb)
LOCTITE®
Bearing retainer screw
10 Nm (1.0 m·kg, 7.2 ft·lb)
LOCTITE®

TIP
- Install the bearing by pressing its outer race evenly.
- To prevent the bearing retainer screws “2” from becoming loose, flatten the edge “a” of each screw into the depression “b” using a punch, etc. Be careful not to damage the hole for the screwdriver in the screw heads.

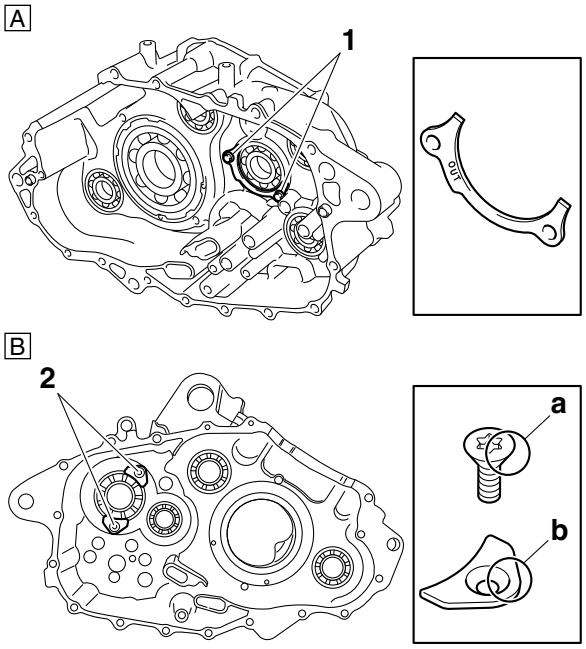

A. Right crankcase
B. Left crankcase

2. Thoroughly clean all the gasket mating surfaces and crankcase mating surfaces.
3. Apply:
   - Sealant “1”
     (onto the crankcase mating surfaces)

Yamaha bond No. 1215
90890-85505
(Three bond No.1215®)

TIP
Do not allow any sealant to come into contact with the oil gallery.

4. Install:
   - Dowel pins “2”
   - O-ring “3” New

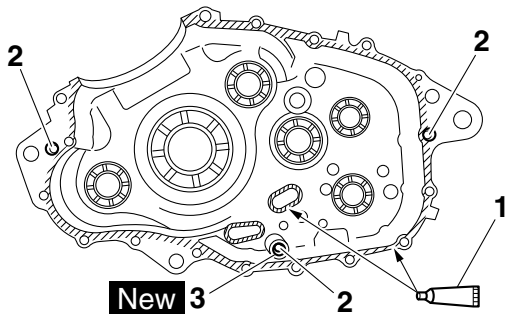

5. Fit the right crankcase onto the left crankcase. Tap lightly on the case with a soft hammer.

ECA1S3L018

NOTICE

Before installing and torquing the crankcase holding bolts, be sure to check whether the transmission is functioning properly by manually rotating the shift drum in both directions.

6. Install:
   - Crankcase bolts

A

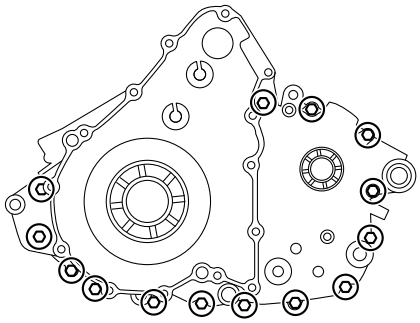

B

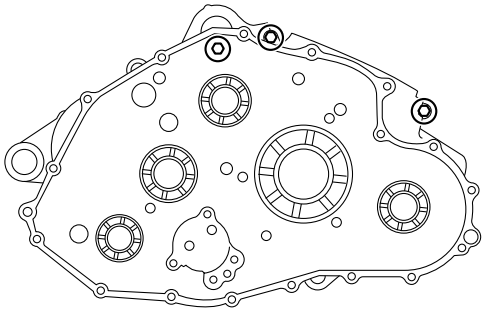

A. Left crankcase
B. Right crankcase

7. Tighten:
   - Crankcase bolts

	Crankcase bolt **10 Nm (1.0 m·kg, 7.2 ft·lb)**

TIP

Tighten the bolts in stages, using a crisscross pattern.

8. Apply:
   - Engine oil
     (to the crankshaft pin, bearing and oil delivery hole)
9. Check:
   - Crankshaft and transmission operation
     Rough operation → Repair.

EAS25960

CRANKSHAFT

Removing the crankshaft

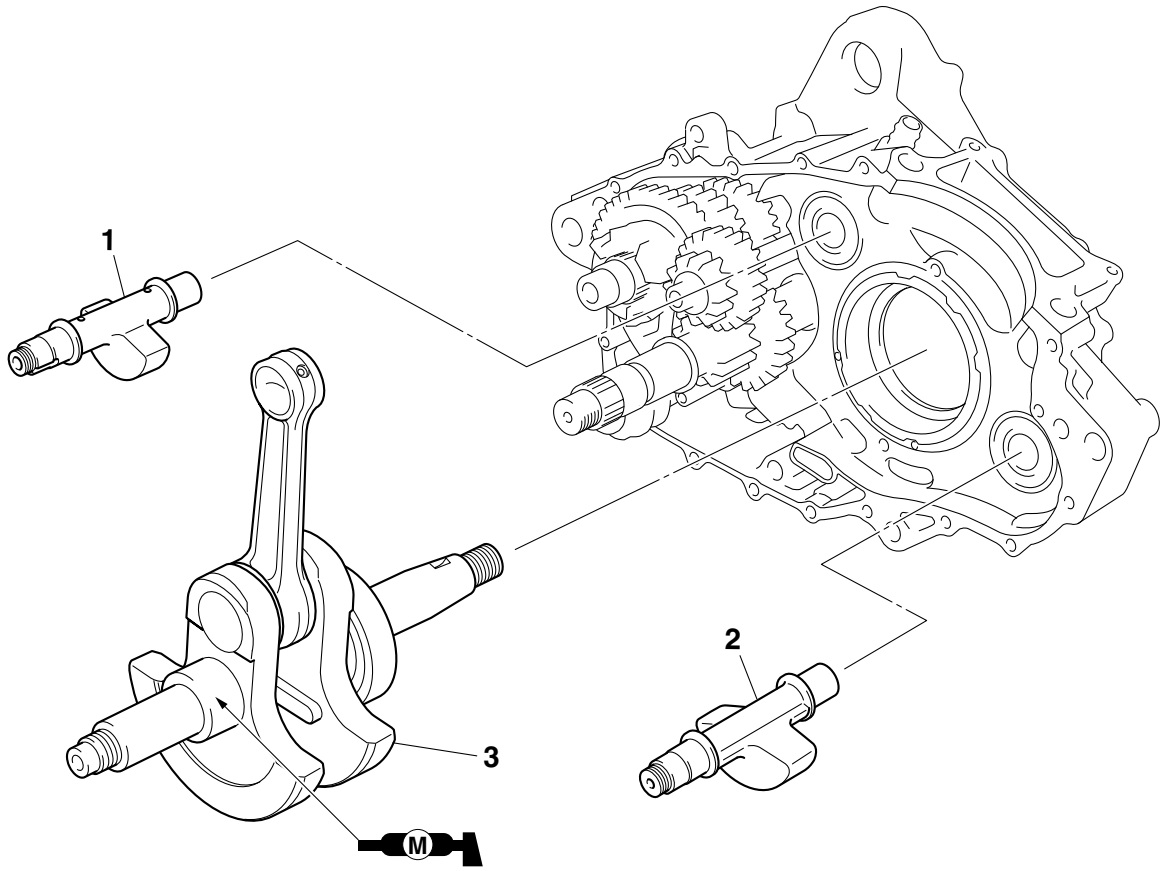

Order	Job/Parts to remove	Q'ty	Remarks
	Crankcase		Separate. Refer to "CRANKCASE" on page 5-56.
1	Balancer 1	1	
2	Balancer 2	1	
3	Crankshaft	1	
			For installation, reverse the removal procedure.

EAS1S3L038
REMOVING THE CRANKSHAFT
1. Remove:
   - Crankshaft “1”

TIP

- Remove the crankshaft with the crankcase separating tool “2”.
- Make sure the crankcase separating tool is centered over the crankshaft.

Crankcase separating tool
90890-01135
Crankcase separator
YU-01135-B

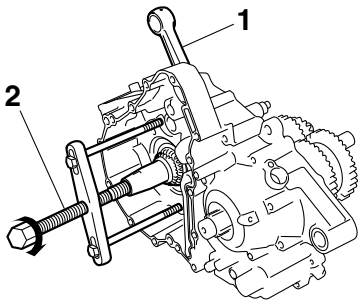

EAS1S3L039
CHECKING THE CRANKSHAFT
1. Measure:
   - Crankshaft width A “a”
     Out of specification → Replace the crankshaft.

Width A
74.95–75.00 mm (2.951–2.953 in)

2. Measure:
   - Crankshaft runout C “b”
     Out of specification → Replace the crankshaft.

Runout limit C
0.030 mm (0.0012 in)

3. Measure:
   - Big end side clearance D “c”
     Out of specification → Replace the crankshaft.

Big end side clearance D
0.350–0.650 mm (0.0138–0.0256 in)

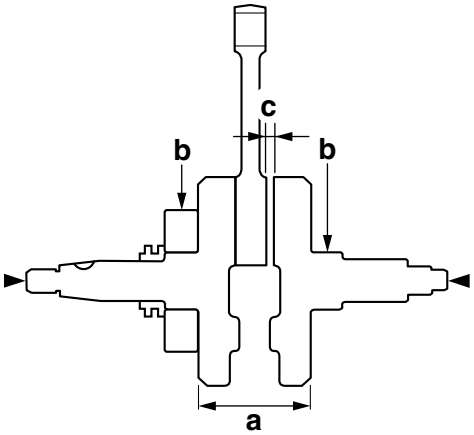

EAS1S3L040
INSTALLING THE CRANKSHAFT
1. Install:
   - Crankshaft “1”

TIP

Install the crankshaft with the crankshaft installer pot “2”, crankshaft installer bolt “3”, adapter (M16) “4” and spacer (crankshaft installer) “5”.

Crankshaft installer pot
90890-01274
Installing pot
YU-90058
Crankshaft installer bolt
90890-01275
Bolt
YU-90060
Adapter (M16)
90890-04130
Adapter #13
YM-04059
Spacer (crankshaft installer)
90890-04081
Pot spacer
YM-91044
Spacer
90890-01309
Pot spacer
YU-90059

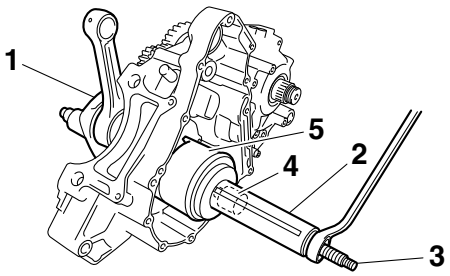

ECA1S3L019

NOTICE

Apply engine oil to each bearing to protect the crankshaft against scratches and to make installation easier.

TIP

Hold the connecting rod at top dead center (TDC) with one hand while turning the nut of the crankshaft installer bolt with the other. Turn the crankshaft installer bolt until the crankshaft assembly bottoms against the bearing.

EAS26241

TRANSMISSION

Removing the transmission, shift drum assembly, and shift forks

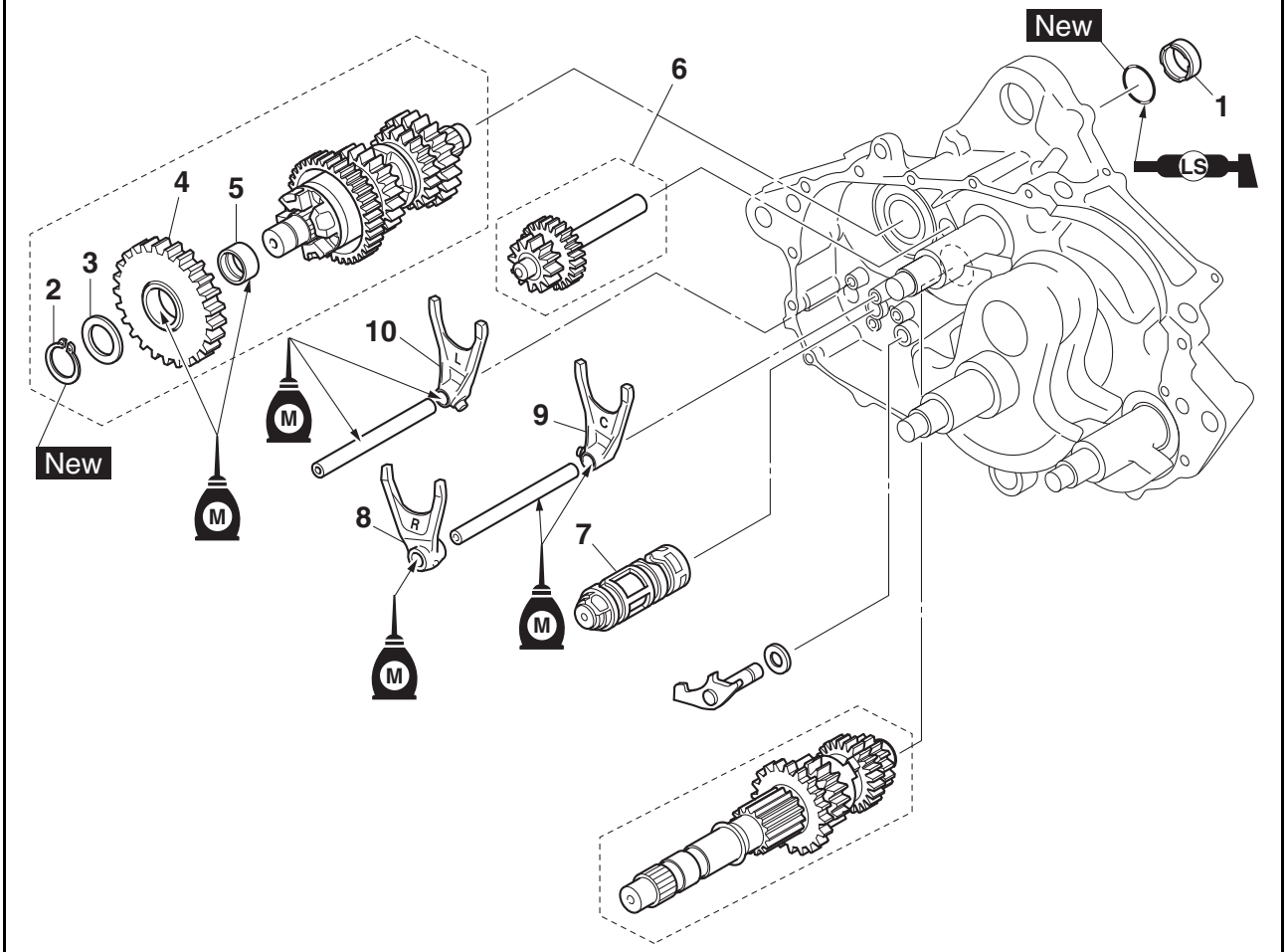

Order	Job/Parts to remove	Q'ty	Remarks
	Crankcase		Separate. Refer to "CRANKCASE" on page 5-56.
1	Spacer	1	
2	Circlip	1	
3	Washer	1	
4	Reverse wheel gear 2	1	
5	Spacer	1	
6	Counter axle assembly	1	
7	Shift drum	1	
8	Shift fork "R"	1	
9	Shift fork "C"	1	
10	Shift fork "L"	1	

Removing the transmission, shift drum assembly, and shift forks

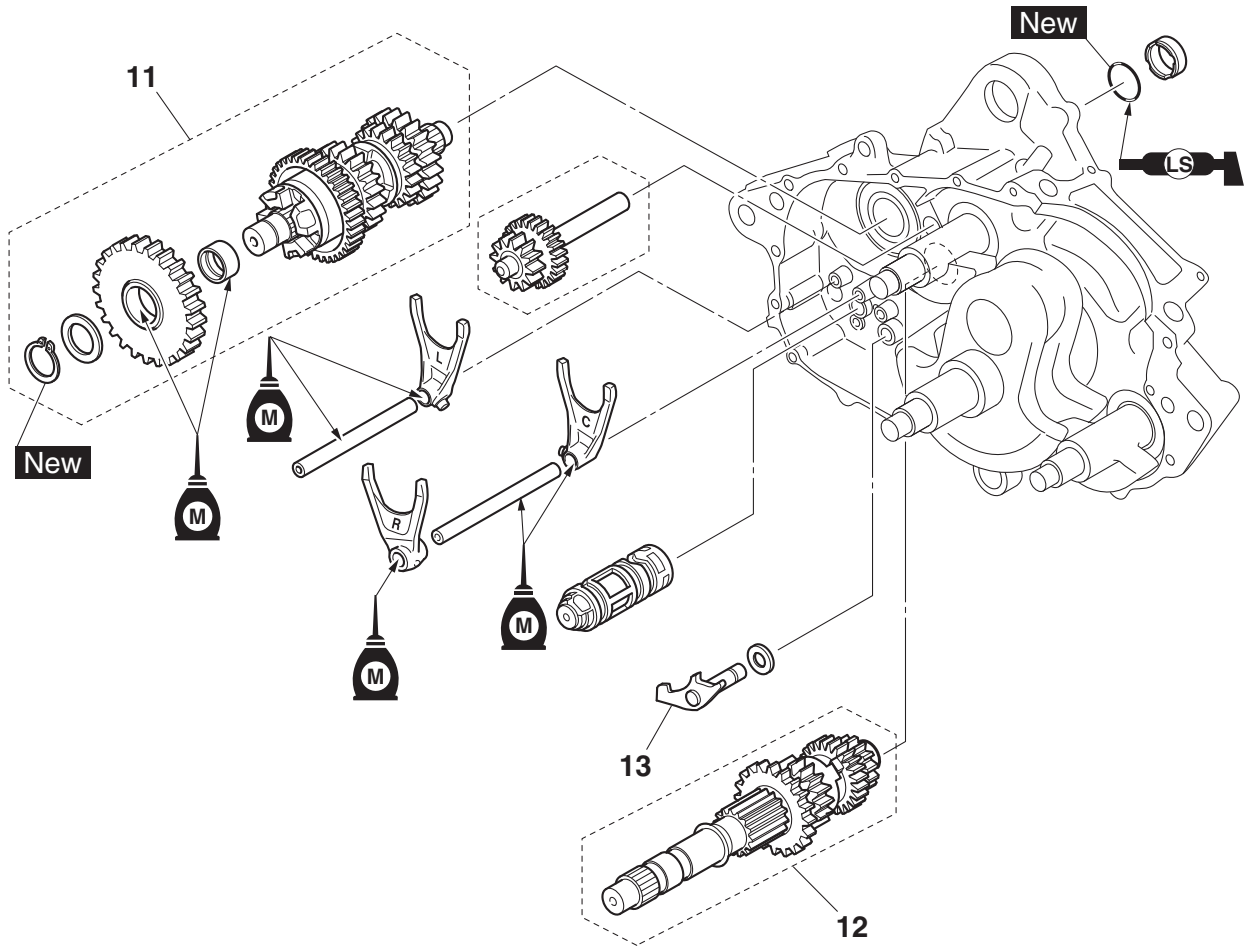

Order	Job/Parts to remove	Q'ty	Remarks
11	Drive axle assembly	1	
12	Main axle assembly	1	
13	Reverse shift shaft	1	
			For installation, reverse the removal procedure.

Disassembling the main axle

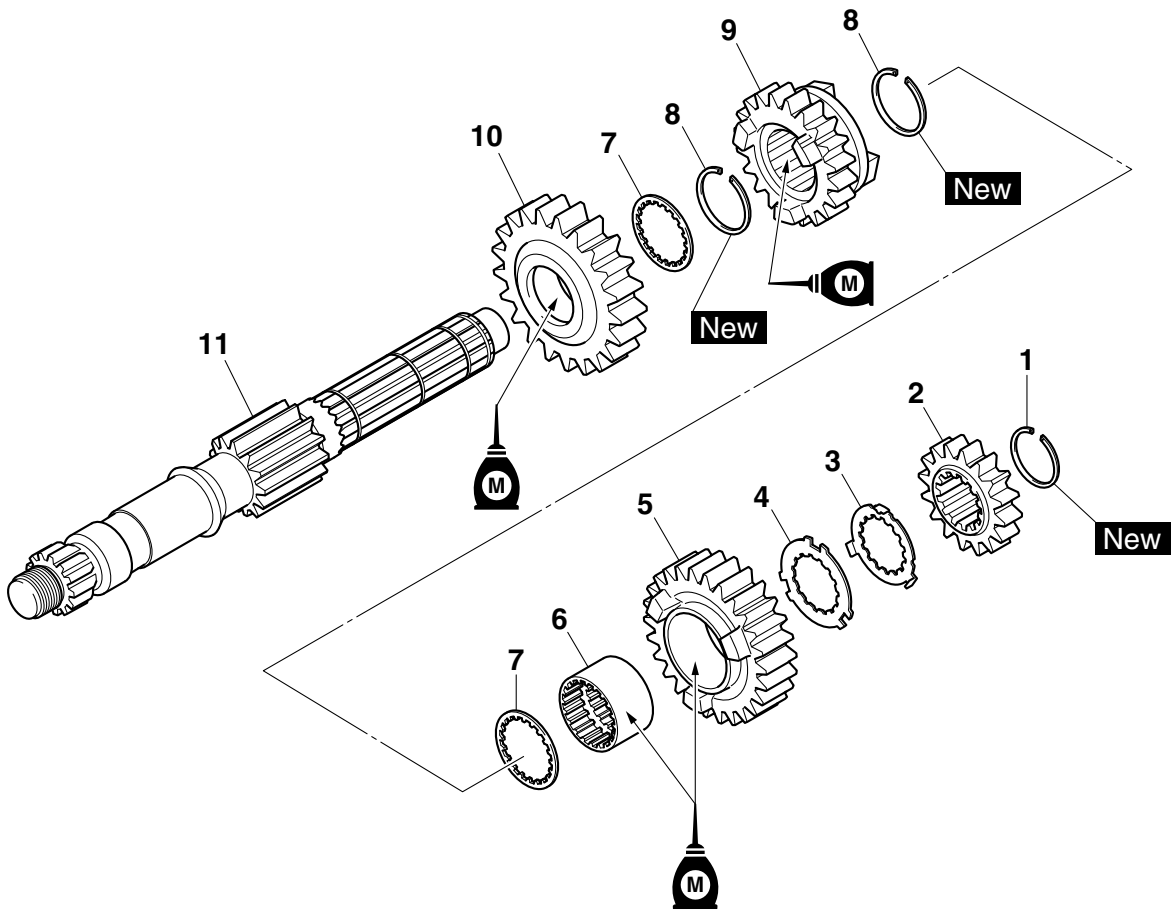

Order	Job/Parts to remove	Q'ty	Remarks
1	Circlip	1	
2	2nd pinion gear	1	
3	Toothed lock washer	1	
4	Toothed washer retainer	1	
5	4th pinion gear	1	
6	Toothed spacer	1	
7	Toothed washer	2	
8	Circlip	2	
9	3rd pinion gear	1	
10	5th pinion gear	1	
11	Main axle/1st pinion gear	1	
			For assembly, reverse the disassembly procedure.

Disassembling the drive axle

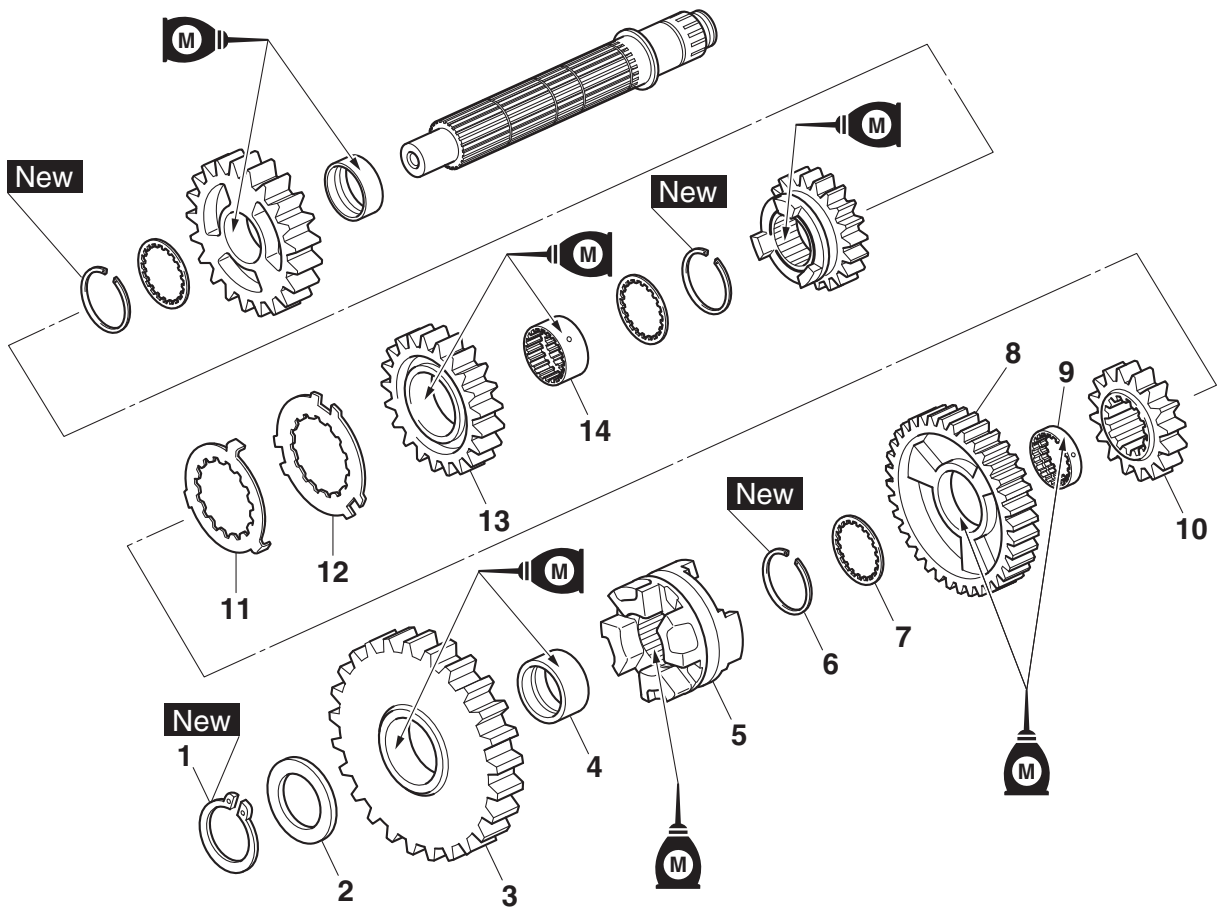

Order	Job/Parts to remove	Q'ty	Remarks
1	Circlip	1	
2	Washer	1	
3	Reverse wheel gear 2	1	
4	Spacer	1	
5	Dog clutch	1	
6	Circlip	1	
7	Toothed washer	1	
8	1st wheel gear	1	
9	Toothed spacer	1	
10	5th wheel gear	1	
11	Toothed lock washer	1	
12	Toothed washer retainer	1	
13	3rd wheel gear	1	
14	Toothed spacer	1	

Disassembling the drive axle

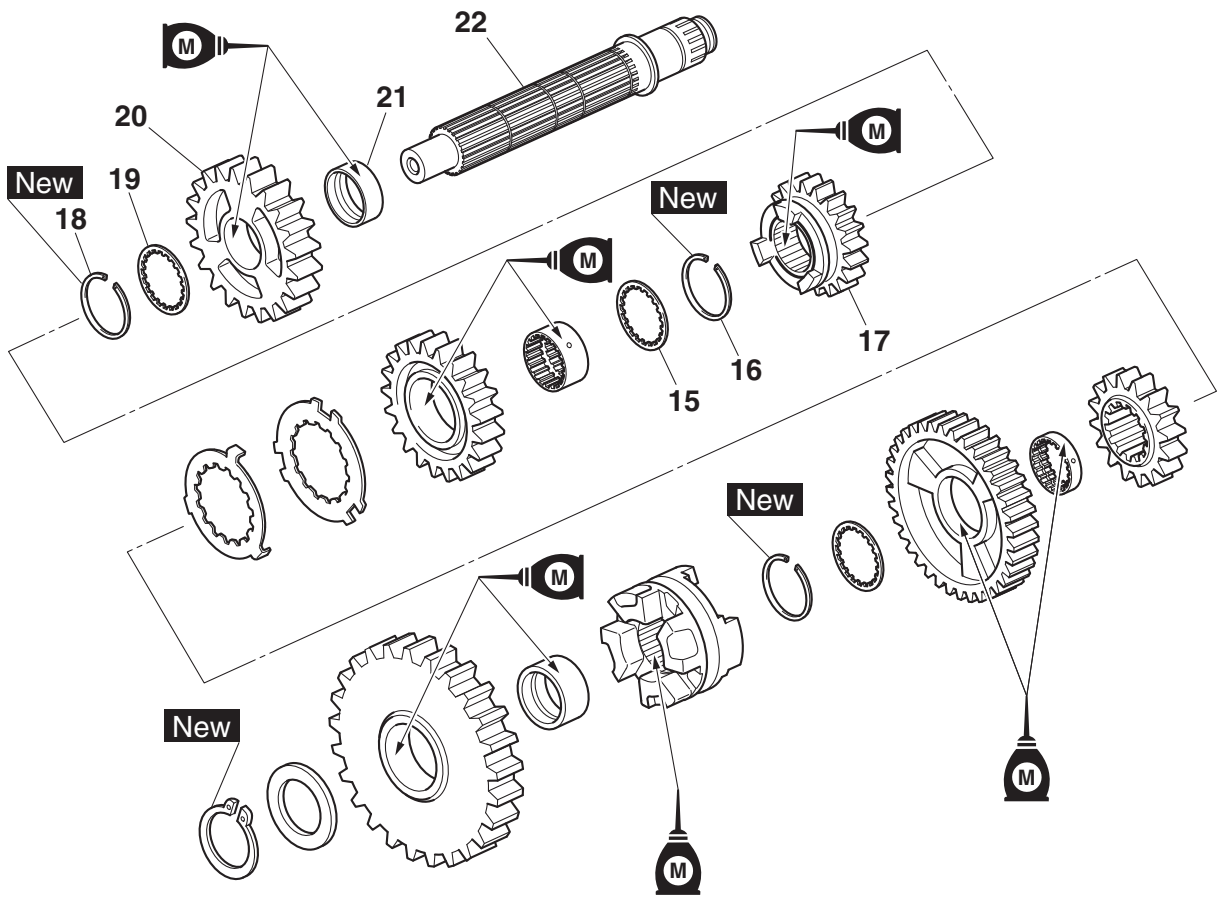

Order	Job/Parts to remove	Q'ty	Remarks
15	Toothed washer	1	
16	Circlip	1	
17	4th wheel gear	1	
18	Circlip	1	
19	Toothed washer	1	
20	2nd wheel gear	1	
21	Spacer	1	
22	Drive axle	1	
			For assembly, reverse the disassembly procedure.

Disassembling the counter axle

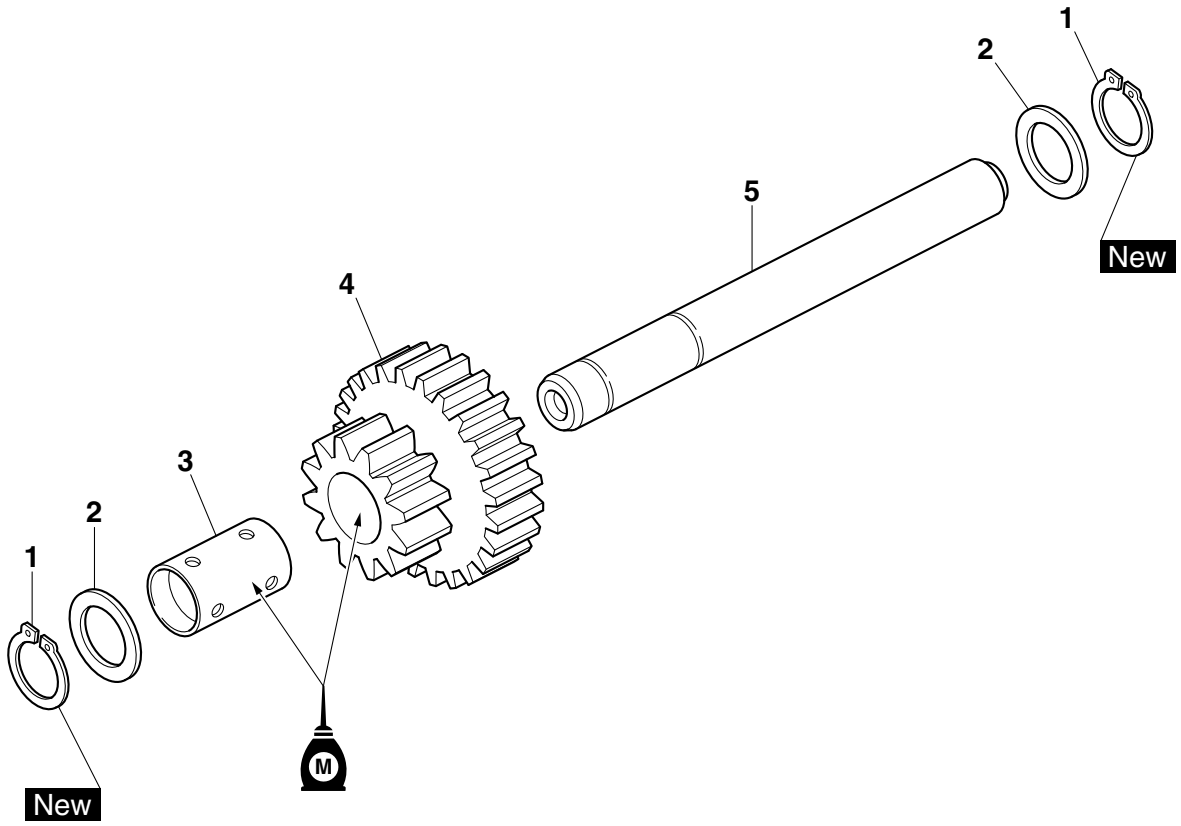

Order	Job/Parts to remove	Q'ty	Remarks
1	Circlip	2	
2	Washer	2	
3	Spacer	1	
4	Reverse wheel gear 1	1	
5	Counter axle	1	
			For assembly, reverse the disassembly procedure.

EAS26260
CHECKING THE SHIFT FORKS

The following procedure applies to all of the shift forks.

1. Check:
   - Shift fork cam follower “1”
   - Shift fork pawl “2”
     Bends/damage/scoring/wear → Replace the shift fork.

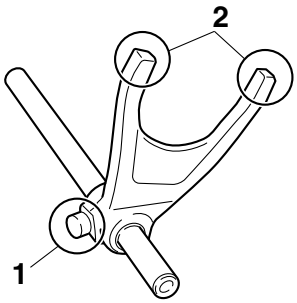

2. Check:
   - Shift fork guide bar
     Roll the shift fork guide bar on a flat surface.
     Bends → Replace.

EWA12840
WARNING

Do not attempt to straighten a bent shift fork guide bar.

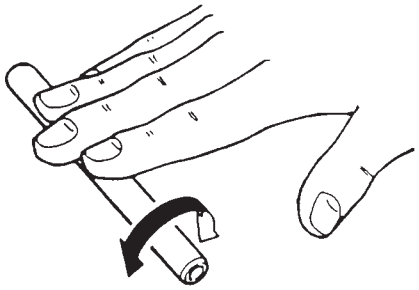

3. Check:
   - Shift fork movement
     Rough movement → Replace the shift forks.

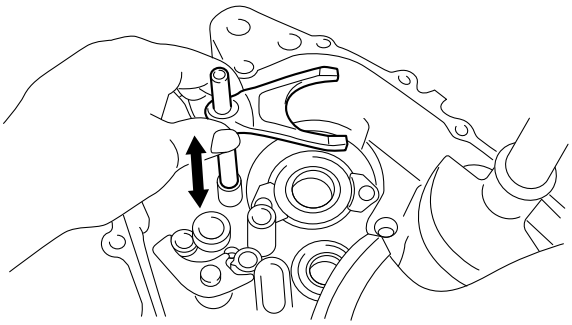

EAS26270
CHECKING THE SHIFT DRUM ASSEMBLY

1. Check:
   - Shift drum grooves
     Damage/scratches/wear → Replace the shift drum assembly.

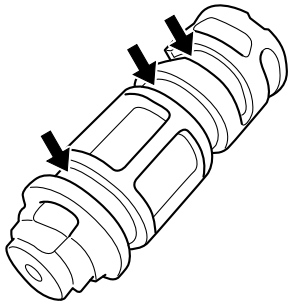

EAS26300
CHECKING THE TRANSMISSION

1. Measure:
   - Main axle runout
     (with a centering device and dial gauge “1”)
     Out of specification → Replace the main axle.

	**Main axle runout limit** **0.08 mm (0.0031 in)**

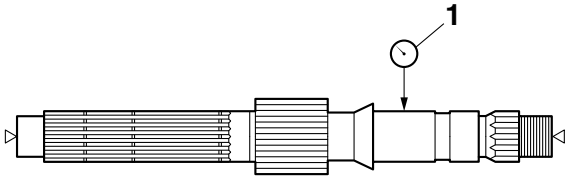

2. Check:
   - Transmission gears
     Blue discoloration/pitting/wear → Replace the defective gear(s).
   - Transmission gear dogs
     Cracks/damage/rounded edges → Replace the defective gear(s).

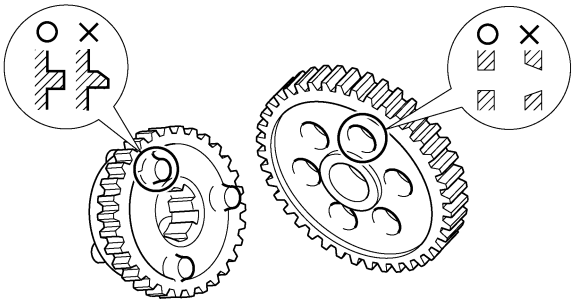

3. Check:
   - Transmission gear engagement
     (each pinion gear to its respective wheel gear)
     Incorrect → Reassemble the transmission axle assemblies.
4. Check:
   - Transmission gear movement
     Rough movement → Replace the defective part(s).
5. Check:
   - Circlips
     Bends/damage/looseness → Replace.

EAS29020

ASSEMBLING THE MAIN AXLE AND DRIVE AXLE

1. Install:
   - Toothed washer "1"
   - Circlip "2" New

TIP

- Be sure the circlip sharp-edged corner "a" is positioned opposite side to the toothed washer and gear.
- Align the opening between the ends "b" of the circlip with a groove "c" in the axle.

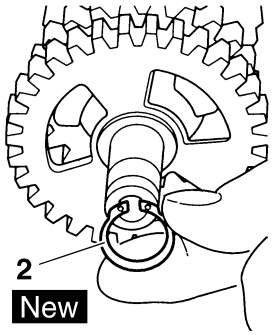

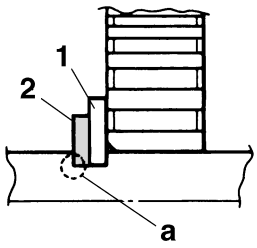

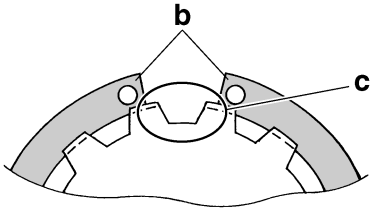

EAS1S3L041

INSTALLING THE TRANSMISSION

1. Install:
   - Drive axle assembly "1"
   - Main axle assembly "2"
   - Shift fork-L "3"
     (to drive axle)
   - Shift fork-C "4"
     (to main axle)
   - Shift fork-R "5"
     (to drive axle)
   - Shift drum "6"

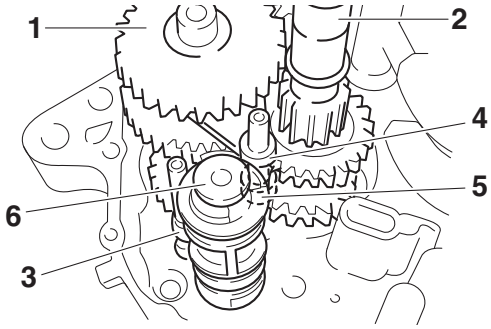

TIP

The embossed marks on the shift forks should face towards the right side of the engine and be in the following sequence: "R", "C", "L". Be sure that the shift fork cam follower is properly seated in the shift drum groove.

2. Install:
   - Counter axle assembly

TIP

- Engage the concave part "a" of the left crankcase and convex part "b" of the counter axle.
- Align the top of the reverse wheel gear 1 "c" and main axle/1st pinion gear "d".

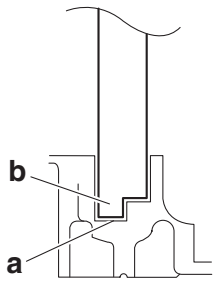

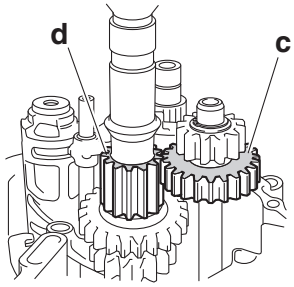

3. Check:
   - Shift operation
     Unsmooth operation → Repair.

TIP

- Apply engine oil to each gear and bearing thoroughly.
- Before assembling the crankcase, make sure that the transmission is in neutral and that the gears turn freely.

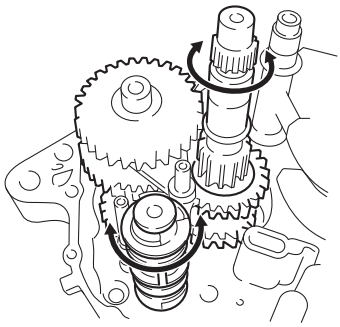

COOLING SYSTEM

EAS26380

RADIATOR

Removing the radiator

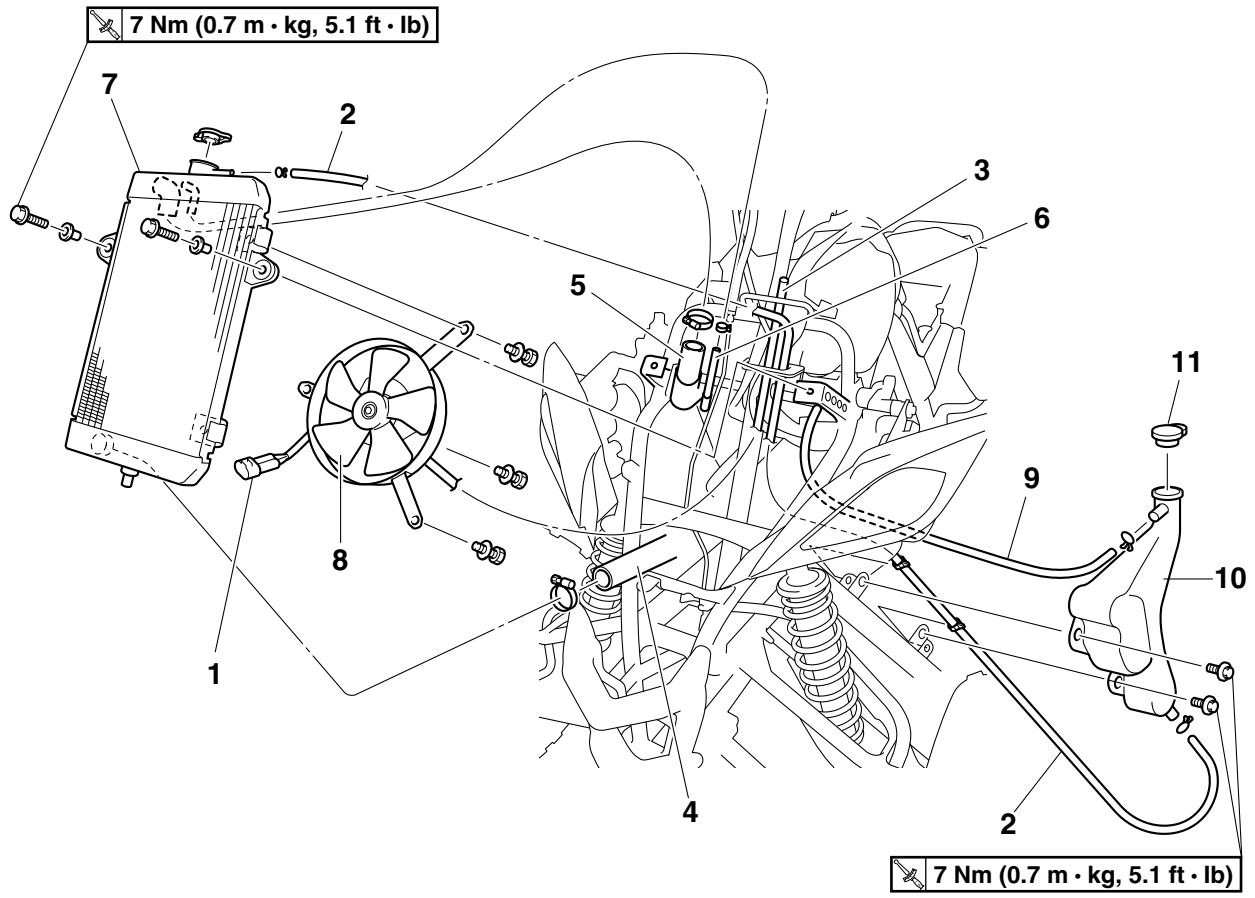

Order	Job/Parts to remove	Q'ty	Remarks
	Front fender		Refer to "GENERAL CHASSIS" on page 4-1.
	Coolant		Drain.
1	Radiator fan motor coupler	1	Disconnect.
2	Coolant reservoir hose	1	
3	Radiator fan motor breather hose	1	Disconnect.
4	Radiator outlet hose	1	Disconnect.
5	Radiator inlet hose	1	Disconnect.
6	Fast idle plunger outlet hose	1	Disconnect.
7	Radiator	1	
8	Radiator fan	1	
9	Coolant reservoir breather hose	1	
10	Coolant reservoir	1	
11	Coolant reservoir cap	1	
			For installation, reverse the removal procedure.

EAS26390

CHECKING THE RADIATOR

1. Check:
   - Radiator fins
     Obstruction → Clean.
     Apply compressed air to the rear of the radiator.
     Damage → Repair or replace.

TIP

Straighten any flattened fins with a thin, flat-head screwdriver.

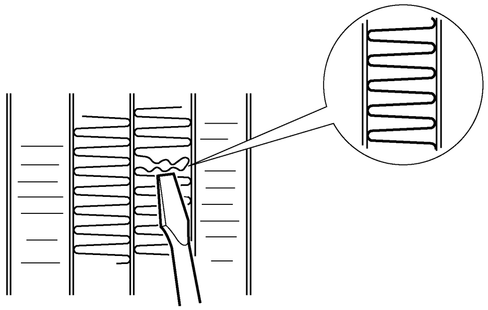

2. Check:
   - Radiator hoses
   - Radiator pipes
     Cracks/damage → Replace.
3. Measure:
   - Radiator cap opening pressure
     Below the specified pressure → Replace the radiator cap.

Radiator cap opening pressure
107.9–137.3 kPa (1.1–1.4 kgf/cm², 15.6–19.9 psi)

▼▼▼▼▼▼▼▼▼▼▼▼▼▼▼▼▼▼▼▼▼▼▼▼▼▼▼▼▼▼▼▼▼

a. Install the radiator cap tester “1” and radiator cap tester adapter “2” to the radiator cap “3”.

Radiator cap tester
90890-01325
Mityvac cooling system tester kit
YU-24460-A
Radiator cap tester adapter
90890-01352
Pressure tester adapter
YU-33984

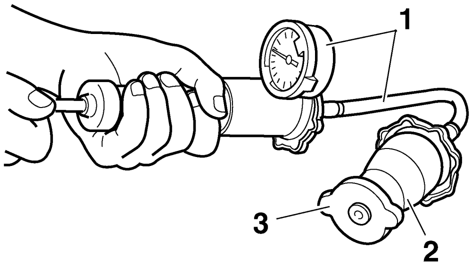

b. Apply the specified pressure for ten seconds and make sure there is no drop in pressure.

▲▲▲▲▲▲▲▲▲▲▲▲▲▲▲▲▲▲▲▲▲▲▲▲▲▲▲▲▲▲▲▲▲

4. Check:
   - Radiator fan
     Damage → Replace.
     Malfunction → Check and repair.
     Refer to “COOLING SYSTEM” on page 8-25.

EAS26400

INSTALLING THE RADIATOR

1. Fill:
   - Cooling system
     (with the specified amount of the recommended coolant)
     Refer to “CHANGING THE COOLANT” on page 3-16.
2. Check:
   - Cooling system
     Leaks → Repair or replace any faulty part.
3. Measure:
   - Radiator cap opening pressure
     Below the specified pressure → Replace the radiator cap.
     Refer to “CHECKING THE RADIATOR” on page 6-2.

EAS26440

THERMOSTAT

Removing the thermostat

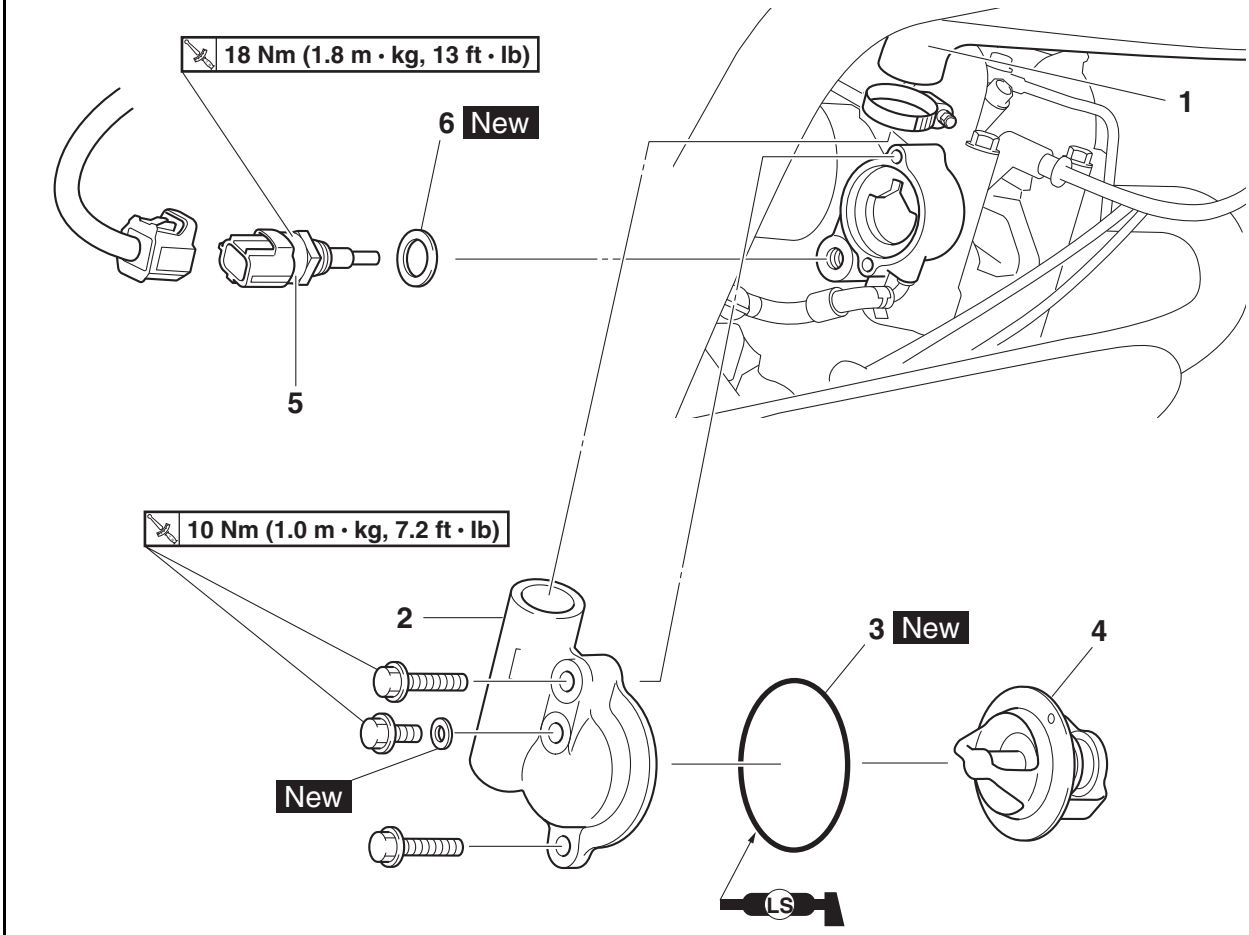

Order	Job/Parts to remove	Q'ty	Remarks
	Front fender		Refer to "GENERAL CHASSIS" on page 4-1.
	Coolant		Drain.
1	Radiator inlet hose	1	
2	Thermostat cover	1	
3	O-ring	1	
4	Thermostat	1	
5	Coolant temperature sensor	1	
6	Copper washer	1	
			For installation, reverse the removal procedure.

EAS26450
CHECKING THE THERMOSTAT

1. Check:
   - Thermostat “1”
     Does not open at 69–73 °C (156.2–163.4 °F) → Replace.

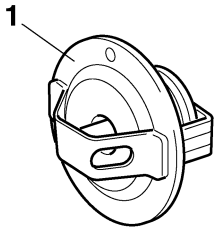

▼▼▼▼▼▼▼▼▼▼▼▼▼▼▼▼▼▼▼▼▼▼▼▼▼▼▼▼▼▼▼▼▼▼

a. Suspend the thermostat “1” in a container “2” filled with water.
b. Slowly heat the water “3”.
c. Place a thermometer “4” in the water.
d. While stirring the water, observe the thermostat and thermometer’s indicated temperature.

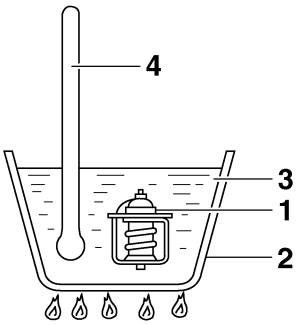

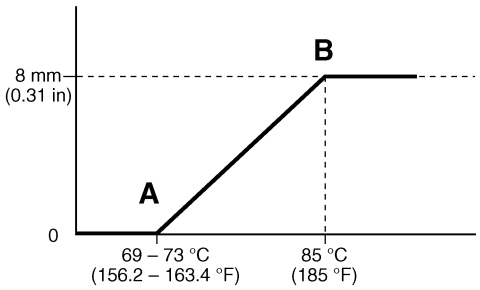

A. Fully closed
B. Fully open

TIP

If the accuracy of the thermostat is in doubt, replace it. A faulty thermostat could cause serious overheating or overcooling.

▲▲▲▲▲▲▲▲▲▲▲▲▲▲▲▲▲▲▲▲▲▲▲▲▲▲▲▲▲▲▲▲▲▲

2. Check:
   - Thermostat cover
   - Thermostat housing (cylinder head)
     Cracks/damage → Replace.

EAS1S3L009
INSTALLING THE THERMOSTAT

1. Install:
   - Thermostat “1”
   - O-ring “2” New
   - Thermostat cover “3”

TIP

Install the thermostat with its breather hole “a” facing up.

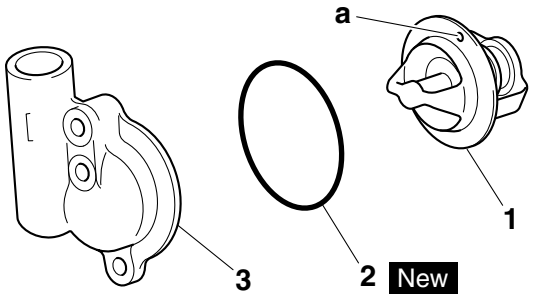

2. Fill:
   - Cooling system
     (with the specified amount of the recommended coolant)
     Refer to “CHANGING THE COOLANT” on page 3-16.
3. Check:
   - Cooling system
     Leak → Repair or replace any faulty part.

EAS26500

WATER PUMP

Removing the water pump

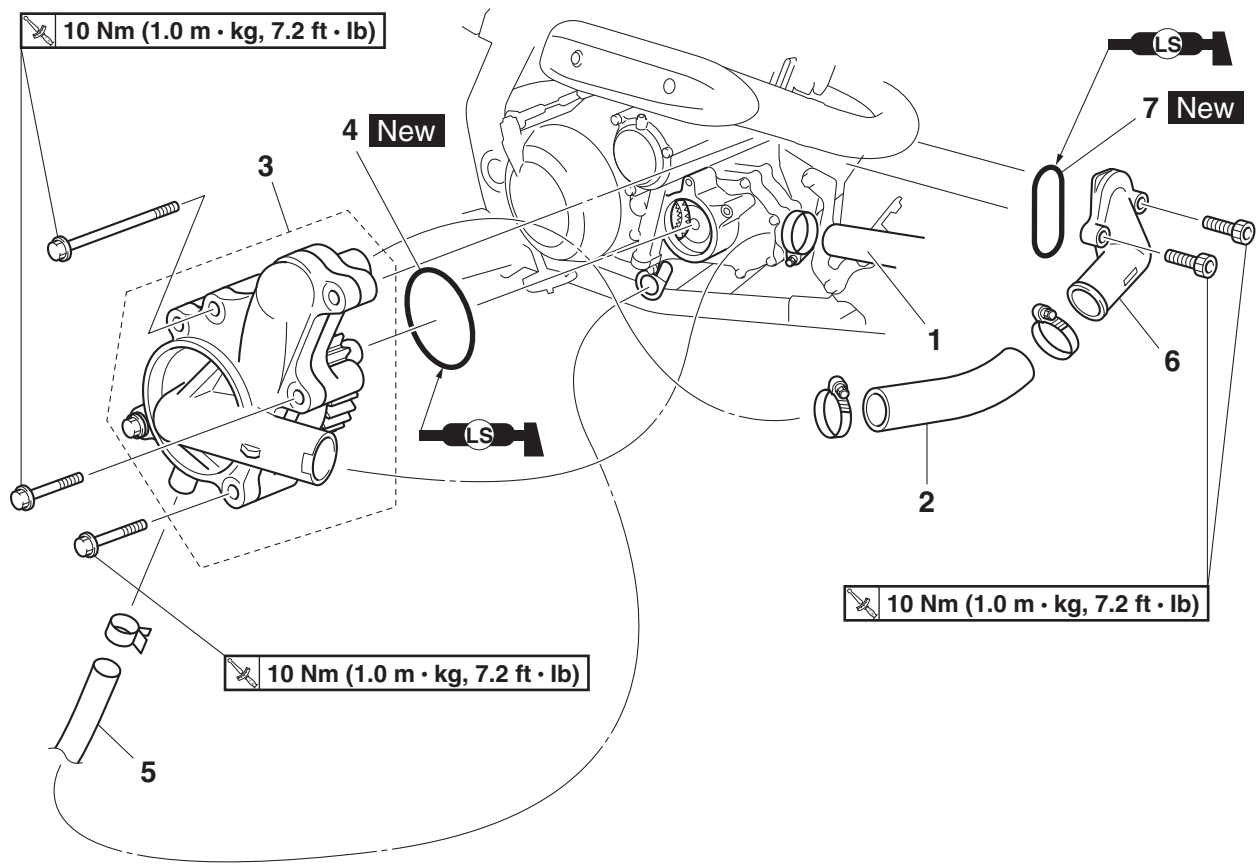

Order	Job/Parts to remove	Q'ty	Remarks
			It is not necessary to remove the water pump unless the coolant level is extremely low or the coolant contains engine oil.
	Coolant		Drain.
1	Radiator outlet hose	1	Disconnect.
2	Water pump outlet hose	1	
3	Water pump	1	
4	O-ring	1	
5	Water pump breather hose	1	
6	Water jacket inlet housing	1	
7	O-ring	1	
			For installation, reverse the removal procedure.

Disassembling the water pump

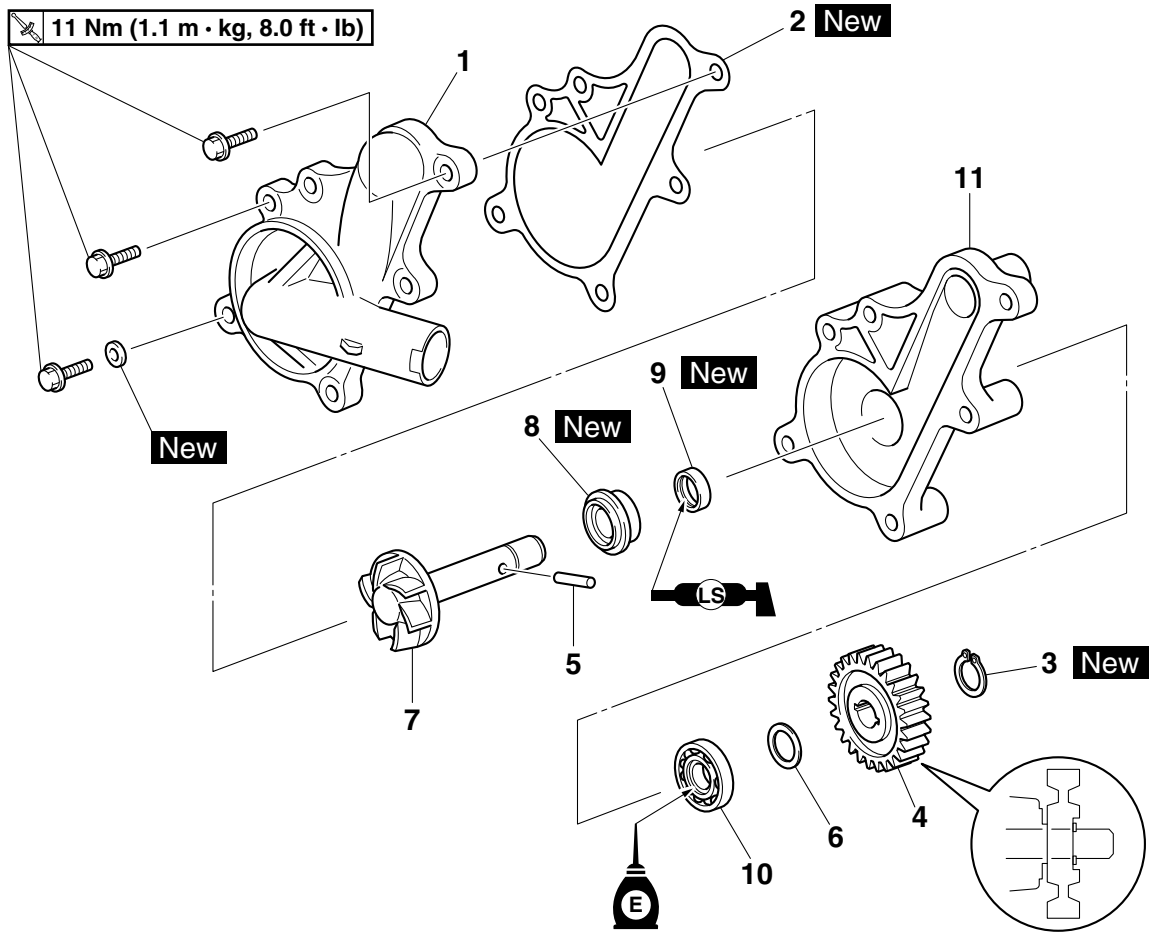

Order	Job/Parts to remove	Q'ty	Remarks
1	Water pump housing cover	1	
2	Gasket	1	
3	Circlip	1	
4	Impeller shaft gear	1	
5	Pin	1	
6	Washer	1	
7	Impeller shaft assembly	1	
8	Water pump seal	1	
9	Oil seal	1	
10	Bearing	1	
11	Water pump housing	1	
			For assembly, reverse the disassembly procedure.

EAS26510
DISASSEMBLING THE WATER PUMP
1. Remove:
   - Water pump seal “1”

TIP

Remove the water pump seal from the inside of the water pump housing “2”.

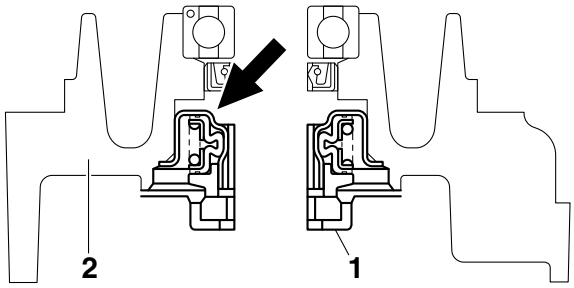

2. Remove:
   - Bearing “1”
   - Oil seal “2”

TIP

Remove the bearing and oil seal from the outside of the water pump housing “3”.

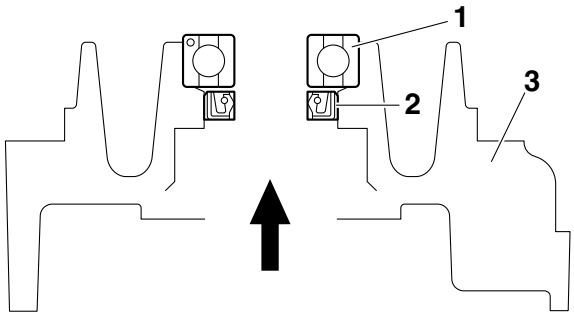

EAS26540
CHECKING THE WATER PUMP
1. Check:
   - Water pump housing “1”
   - Impeller “2”
   - Water pump housing cover “3”
     Cracks/damage/wear → Replace.

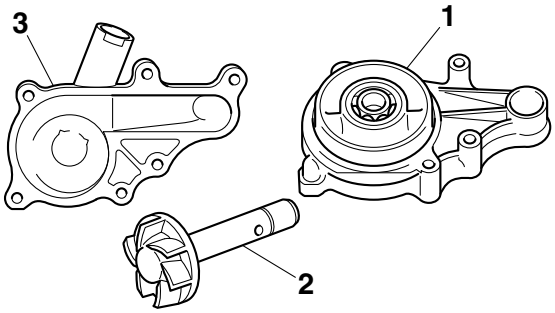

2. Check:
   - Bearing
     Rough movement → Replace.
   - Impeller shaft gear
     Pitting/wear → Replace.

EAS26560
ASSEMBLING THE WATER PUMP
1. Install:
   - Oil seal “1” New
     (into the water pump housing “2”)

TIP

- Before installing the oil seal, apply tap water or coolant onto its outer surface.
- Install the oil seal with a socket “3” that matches its outside diameter.

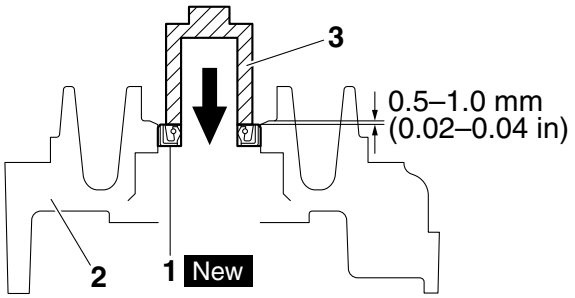

2. Install:
   - Water pump seal “1” New
     (into the water pump housing “2”)

ECA14080

NOTICE

Never lubricate the water pump seal surface with oil or grease.

TIP

Install the water pump seal with the special tools.

Mechanical seal installer
90890-04132
Water pump seal installer
YM-33221-A
Middle driven shaft bearing driver
90890-04058
Middle drive bearing installer 40 & 50 mm
YM-04058

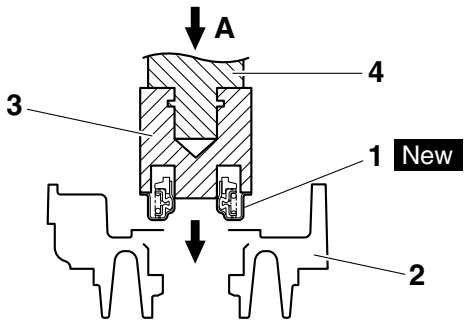

3. Mechanical seal installer
4. Middle driven shaft bearing driver
A. Push down

3. Measure:
- Impeller shaft tilt

	Impeller shaft tilt limit **0.15 mm (0.006 in)**

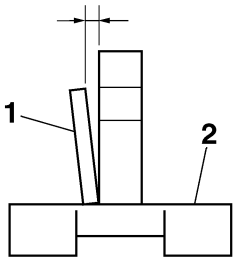

1. Straightedge
2. Impeller

FUEL SYSTEM

EAS26620

FUEL TANK

Removing the fuel tank

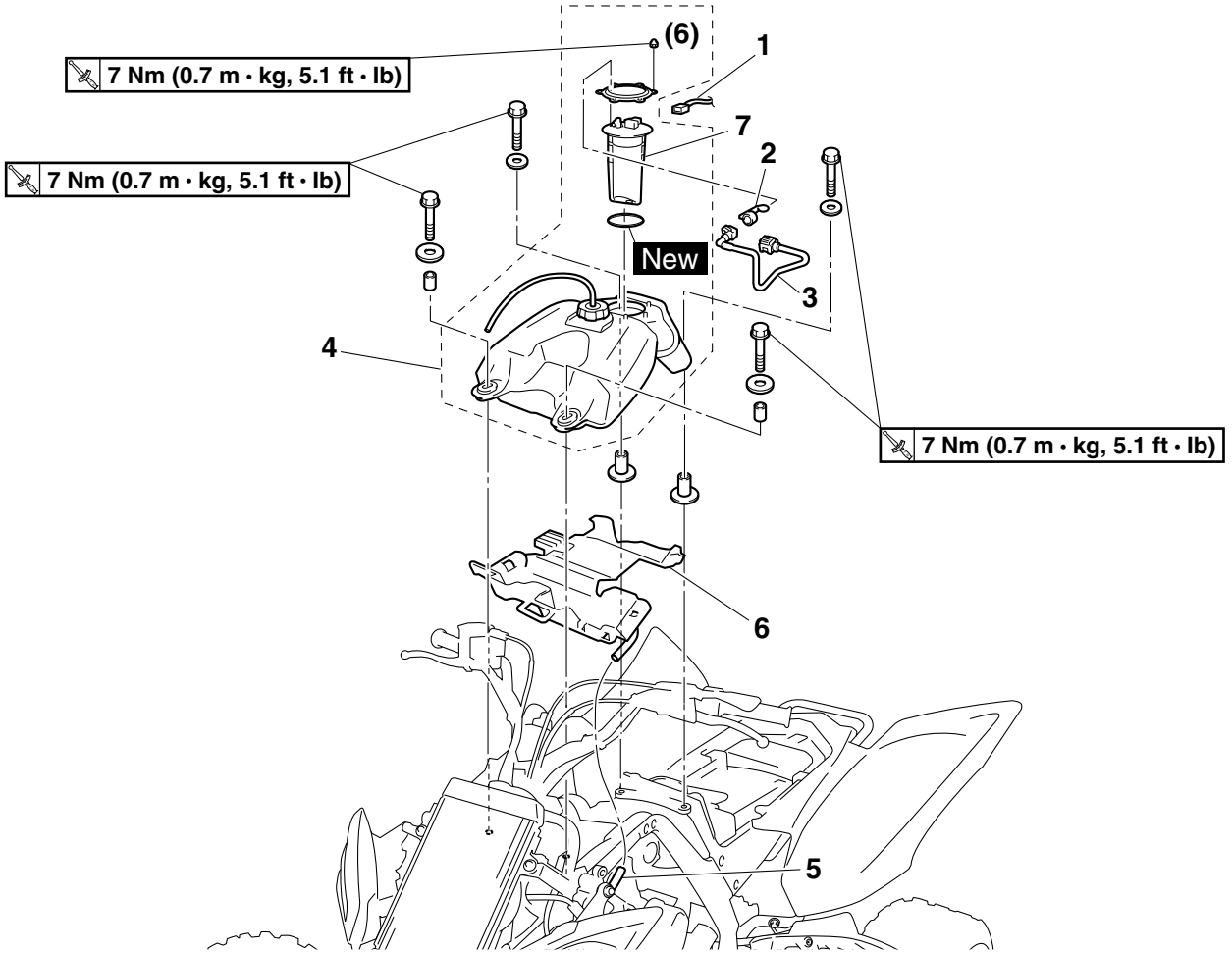

Order	Job/Parts to remove	Q'ty	Remarks
	Seat/front panel/fuel tank top panel/front fender		Refer to "GENERAL CHASSIS" on page 4-1.
1	Fuel pump coupler	1	Disconnect.
2	Fuel hose connector holder	1	
3	Fuel hose	1	
4	Fuel tank	1	**TIP** When installing the fuel tank, pass the fuel tank breather hose through the hole in the handlebar cover, and then insert the end of the hose into the steering stem.
5	Drain hose	1	
6	Fuel tank shield	1	
7	Fuel pump	1	
			For installation, reverse the removal procedure.

EAS26630
REMOVING THE FUEL TANK
1. Extract the fuel in the fuel tank through the fuel tank cap with a pump.
2. Remove:
   - Fuel hose connector holder
   - Fuel hose

ECA1S3L006
NOTICE
- **Be sure to disconnect the fuel hose by hand. Do not forcefully disconnect the hose with tools.**
- **Although the fuel has been removed from the fuel tank, be careful when removing the fuel hose, since there may be fuel remaining in it.**

TIP
- When removing the fuel hose from the fuel pump, remove the fuel hose connector holder first, and next, insert a slotted head screwdriver etc. in the slot part “a” of the fuel hose connector cover “1”, then slide the screwdriver in the direction of the arrow, and remove the fuel hose.
- To remove the fuel hose from the throttle body, slide the fuel hose connector cover “2” on the end of the hose in direction of the arrow shown, press the two buttons “3” on the sides of the connector, and then remove the hose.
- Before removing the hoses, place a few rags in the area under where it will be removed.

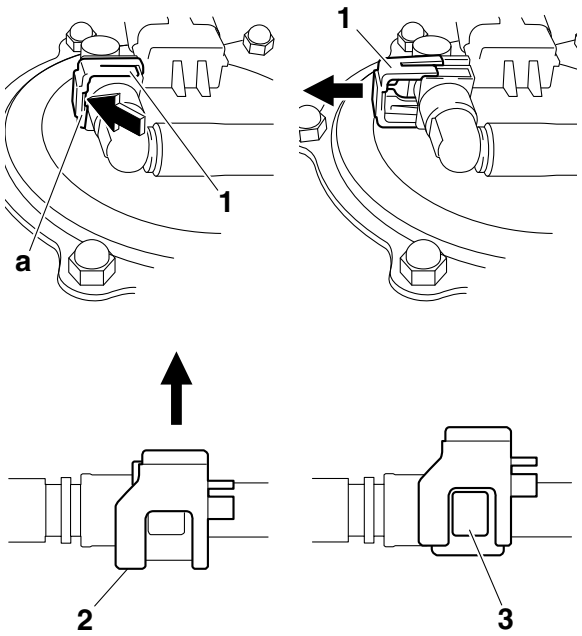

3. Remove:
   - Fuel tank

TIP
Do not set the fuel tank down on the installation surface of the fuel pump. Be sure to lean the fuel tank against a wall or like.

EAS26640
REMOVING THE FUEL PUMP
1. Remove:
   - Fuel pump bracket
   - Fuel pump
   - Fuel pump gasket

ECA14720
NOTICE
- **Do not drop the fuel pump or give it a strong shock.**
- **Do not touch the base section of the fuel sender.**

EAS26670
CHECKING THE FUEL PUMP BODY
1. Check:
   - Fuel pump body
     Obstruction → Clean.
     Cracks/damage → Replace fuel pump assembly.

EAS1S3L010
INSTALLING THE FUEL PUMP
1. Install:
   - Fuel pump gasket New
   - Fuel pump
   - Fuel pump bracket

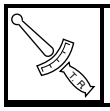	**Fuel pump nut** **7 Nm (0.7 m·kg, 5.1 ft·lb)**

TIP
- Do not damage the installation surface of the fuel tank when installing the fuel pump.
- Always use a new fuel pump gasket.
- Install the fuel pump bracket by aligning the projection “a” on the fuel pump with the projection on the fuel tank.
- Tighten the bolts to the specified torque in the proper tightening sequence as shown.
- Install the fuel pump in the direction shown in the illustration.

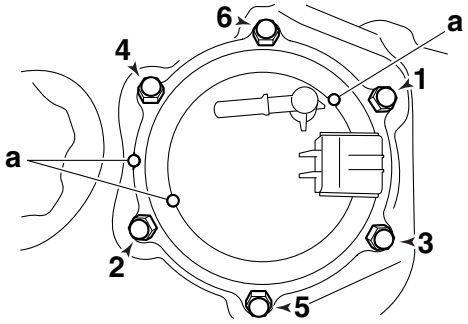

EAS1S3L011

INSTALLING THE FUEL HOSE

1. Install:
   - Fuel hose
   - Fuel hose holder
   - Fuel pump coupler

ECA1S3L007

NOTICE

When installing the fuel hose, make sure that it is securely connected, and that the fuel hose holder is in the correct position, otherwise the fuel hose will not be properly installed.

TIP

Install the fuel hose connector cover "1" securely onto the fuel tank until a distinct "click" is heard, and then make sure that it does not come loose.

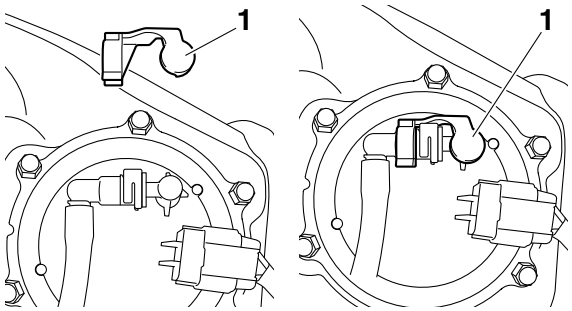

EAS26970

THROTTLE BODY

Removing the throttle body

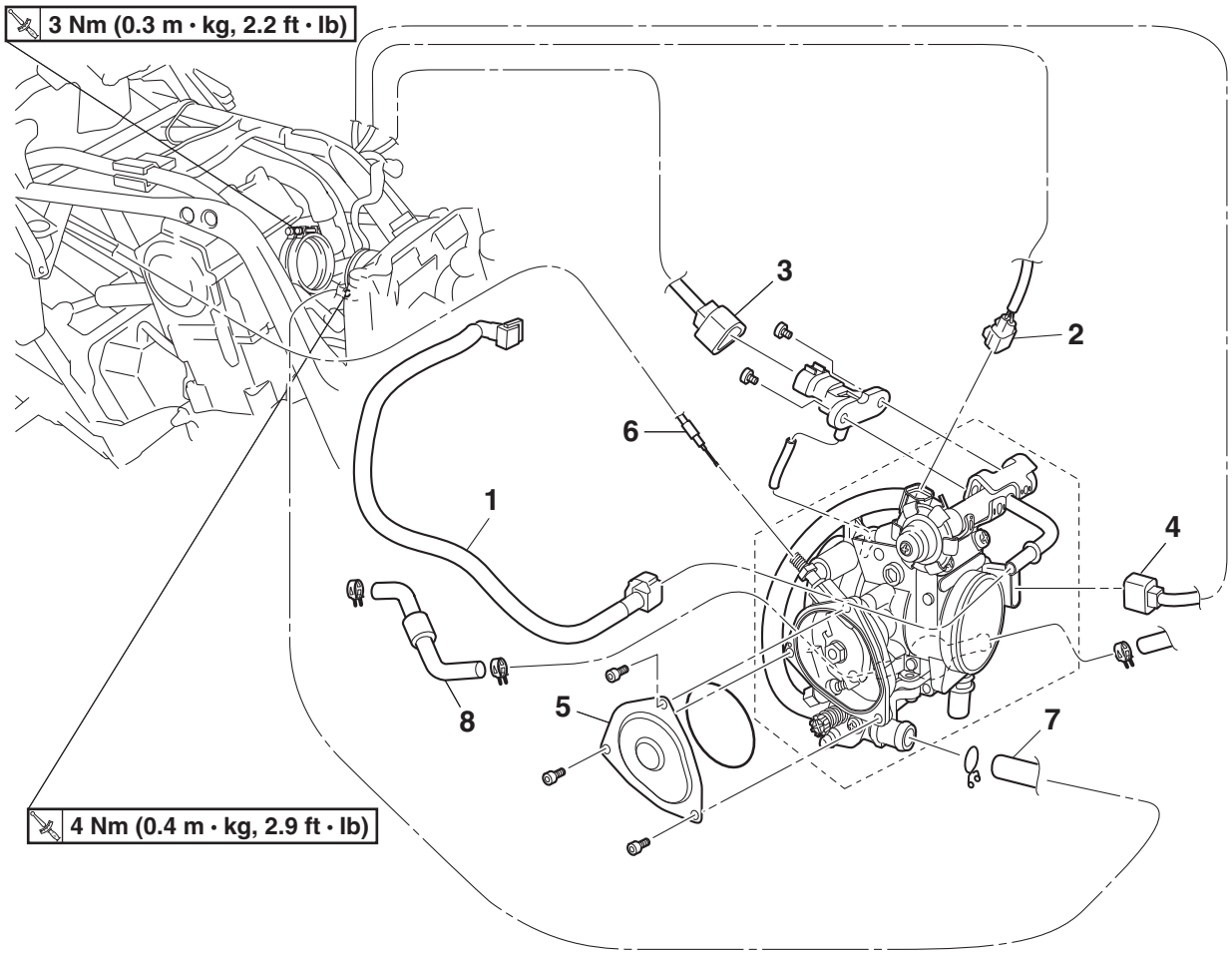

Order	Job/Parts to remove	Q'ty	Remarks
	Fuel tank shield		Refer to "GENERAL CHASSIS" on page 4-1.
	Coolant		Drain. Refer to "CHANGING THE COOLANT" on page 3-16.
1	Fuel hose	1	Disconnect.
2	Fuel injector coupler	1	Disconnect.
3	Intake air pressure sensor coupler	1	Disconnect.
4	Throttle position sensor coupler	1	Disconnect.
5	Throttle cable housing cover	1	
6	Throttle cable	1	
7	Hose (air-filter-joint-to-throttle-body-left-side)	1	Disconnect.
8	Fast idle plunger inlet hose	1	

Removing the throttle body

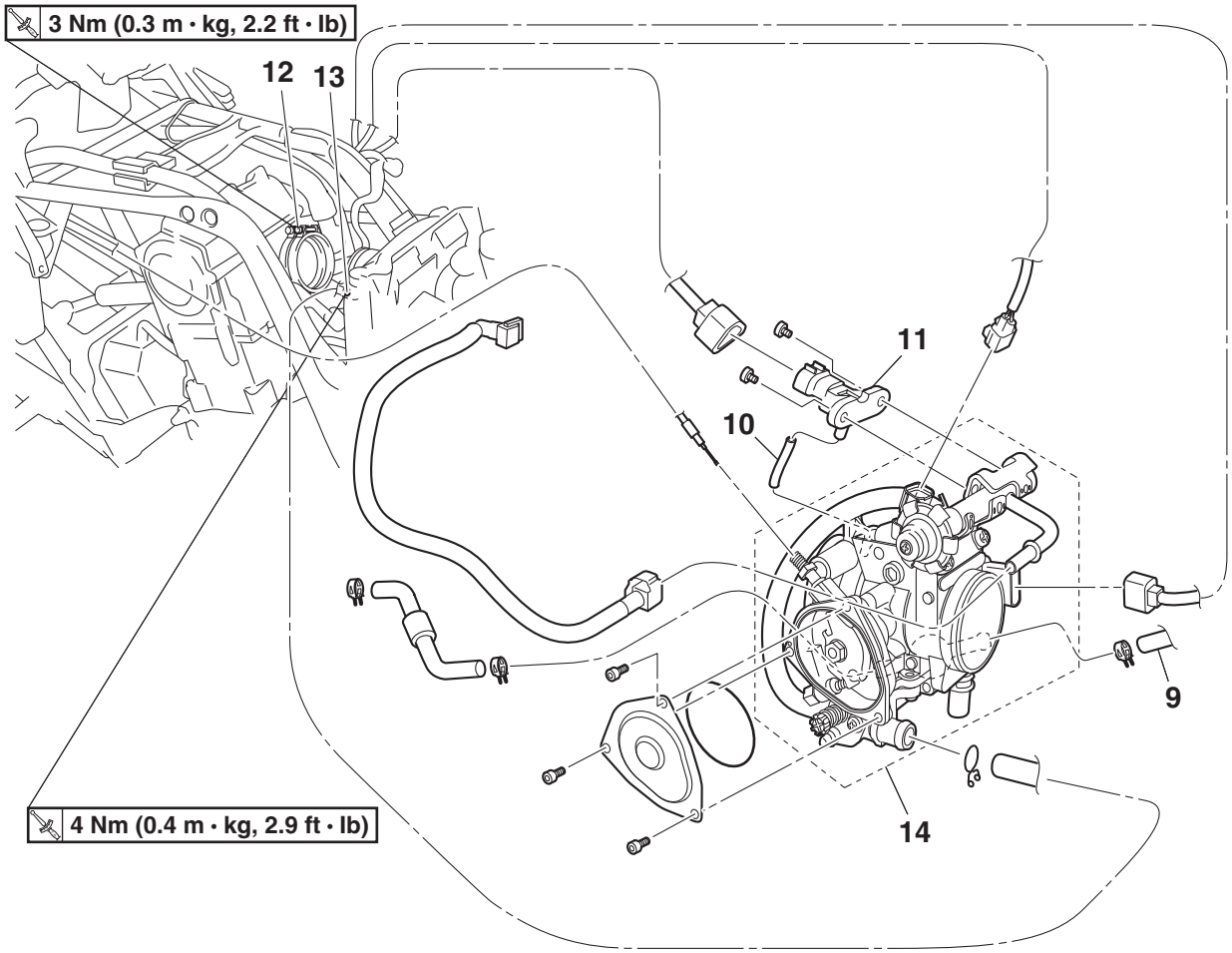

Order	Job/Parts to remove	Q'ty	Remarks
9	Fast idle plunger outlet hose	1	Disconnect.
10	Intake air pressure sensor hose	1	
11	Intake air pressure sensor	1	
12	Intake manifold clamp screw	1	Loosen.
13	Air filter case joint clamp screw	1	Loosen.
14	Throttle body assembly	1	
			For installation, reverse the removal procedure.

Disassembling the throttle body

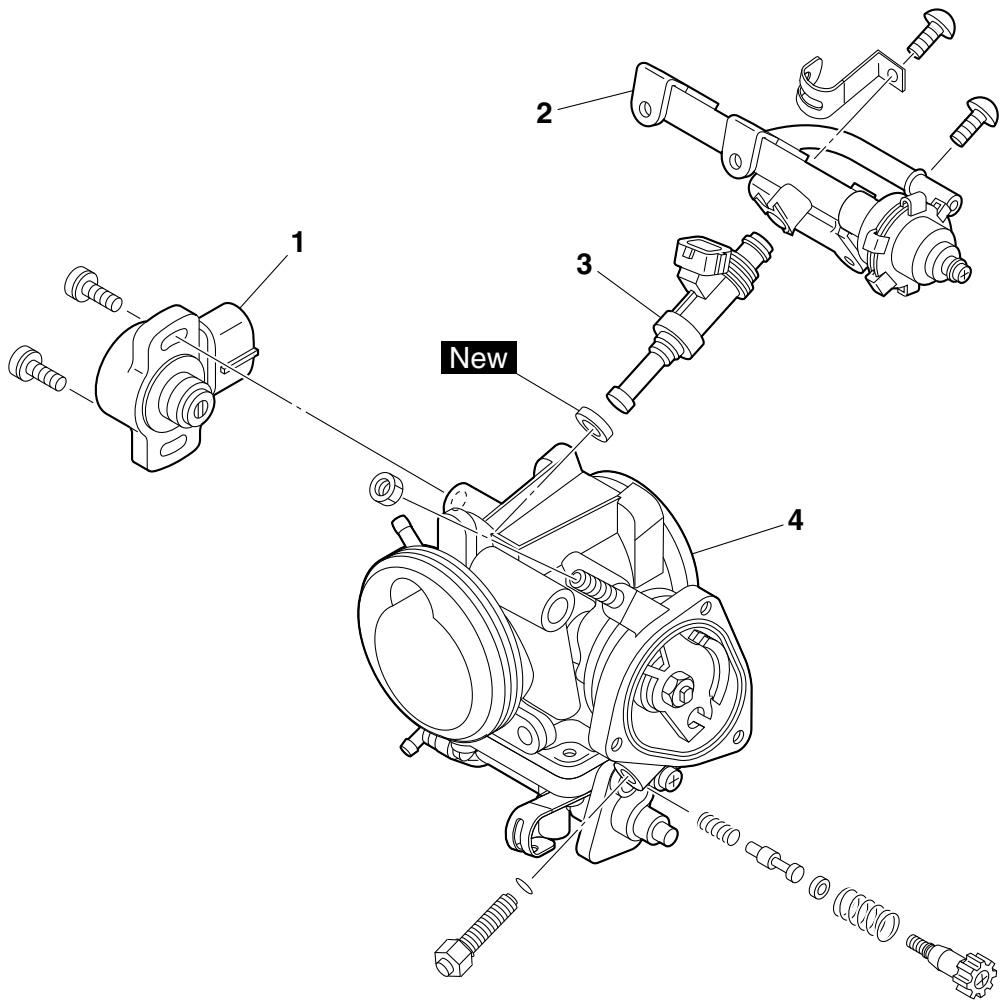

Order	Job/Parts to remove	Q'ty	Remarks
1	Throttle position sensor	1	
2	Fuel injection pipe	1	
3	Fuel injector	1	
4	Throttle body	1	ECA1S3L008 ***NOTICE*** **The throttle body should not be disassembled.**
			For assembly, reverse the disassembly procedure.

EAS26980
CHECKING THE INJECTOR
1. Check:
   - Injector
     Damage → Replace.

EAS26990
CHECKING THE THROTTLE BODY
1. Check:
   - Throttle body
     Cracks/damage → Replace the throttle body.
2. Check:
   - Fuel passages
     Obstructions → Clean.

▼▼▼▼▼▼▼▼▼▼▼▼▼▼▼▼▼▼▼▼▼▼▼▼▼▼▼▼▼▼▼▼▼▼

a. Wash the throttle body in a petroleum- based solvent.
   Do not use any caustic carburetor cleaning solution.
b. Blow out all of the passages with compressed air.

▲▲▲▲▲▲▲▲▲▲▲▲▲▲▲▲▲▲▲▲▲▲▲▲▲▲▲▲▲▲▲▲▲▲

EAS27010
CHECKING THE PRESSURE REGULATOR OPERATION
1. Check:
   - Pressure regulator operation

▼▼▼▼▼▼▼▼▼▼▼▼▼▼▼▼▼▼▼▼▼▼▼▼▼▼▼▼▼▼▼▼▼▼

a. Remove the fuel tank top panel.
   Refer to “GENERAL CHASSIS” on page 4-1.
b. Remove the fuel hose connector cover and fuel hose retainer.
c. Disconnect the fuel hose “1” from the fuel pump.

TIP

- When removing the fuel hose from the fuel pump, remove the fuel hose connector holder first, and next, insert a slotted head screwdriver etc. in the slot part “a” of the fuel hose connector cover “2”, then slide it in the direction of the arrow, and remove the fuel hose.
- Before removing the hose, place a few rags in the area under where it will be removed.

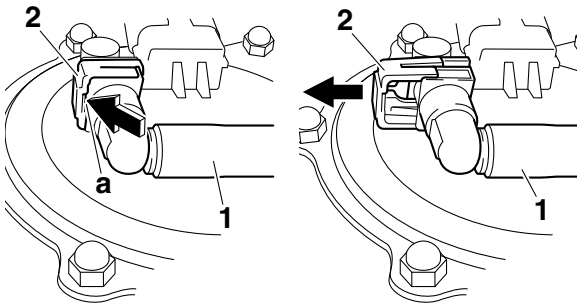

d. Connect the pressure gauge “3” and adapter “4” to the fuel pump and fuel hose.

Pressure gauge
90890-03153
Pressure gauge
YU-03153
Fuel pressure adapter
90890-03176
Fuel pressure adapter
YM-03176

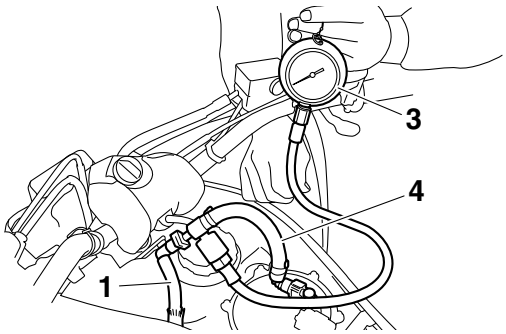

e. Start the engine.
f. Measure the fuel pressure.
   Out of specification → Replace the fuel pump.

Fuel pressure
324 kPa (3.24 kgf/cm², 46.1 psi)

▲▲▲▲▲▲▲▲▲▲▲▲▲▲▲▲▲▲▲▲▲▲▲▲▲▲▲▲▲▲▲▲▲▲

EAS27030
ADJUSTING THE THROTTLE POSITION SENSOR

TIP

Before adjusting the throttle position sensor, the engine idling speed should be properly adjusted.

1. Check:
   - Throttle position sensor
     Refer to “CHECKING THE THROTTLE POSITION SENSOR” on page 8-76.
2. Adjust:
   - Throttle position sensor angle

▼▼▼▼▼▼▼▼▼▼▼▼▼▼▼▼▼▼▼▼▼▼▼▼▼▼▼▼▼▼▼▼▼▼

a. Connect the throttle position sensor coupler to the wire harness.
b. Connect the digital circuit tester to the throttle position sensor.

- Positive tester probe
  yellow “1”
- Negative tester probe
  black/blue “2”

Digital circuit tester
90890-03174
Model 88 Multimeter with tachometer
YU-A1927

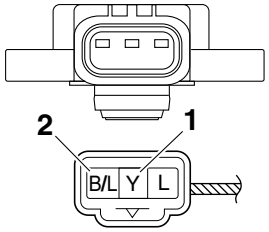

c. Measure the throttle position sensor voltage.
d. Adjust the throttle position sensor angle so that the voltage is within the specified range.

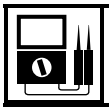

Throttle position sensor voltage
0.63–0.73 V (yellow–black/blue)

e. After adjusting the throttle position sensor angle, tighten the throttle position sensor screws “3”.

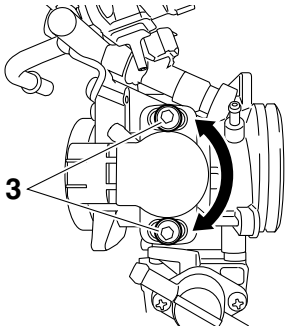

▲▲▲▲▲▲▲▲▲▲▲▲▲▲▲▲▲▲▲▲▲▲▲▲▲▲▲▲▲▲▲▲

EAS1S3L044

INSTALLING THE THROTTLE BODY

1. Install:
   - Throttle body assembly

TIP

Align the projection “a” on the throttle body with the slot “b” in the throttle body joint.

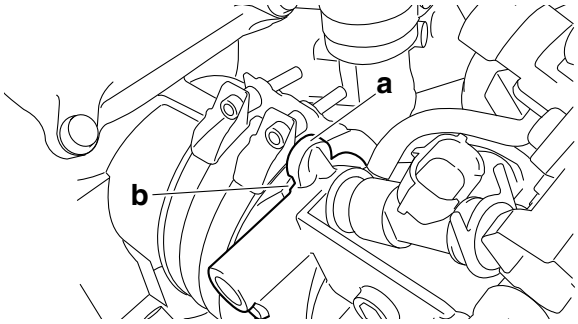

2. Install:
   - Throttle cable
3. Adjust:
   - Throttle lever free play
     Refer to “ADJUSTING THE THROTTLE LEVER FREE PLAY” on page 3-6.
4. Adjust:
   - Engine idling speed
     Refer to “ADJUSTING THE ENGINE IDLING SPEED” on page 3-6.
5. Check:
   - Throttle position sensor
     Refer to “ADJUSTING THE THROTTLE POSITION SENSOR” on page 7-7.

EAS27040

AIR INDUCTION SYSTEM

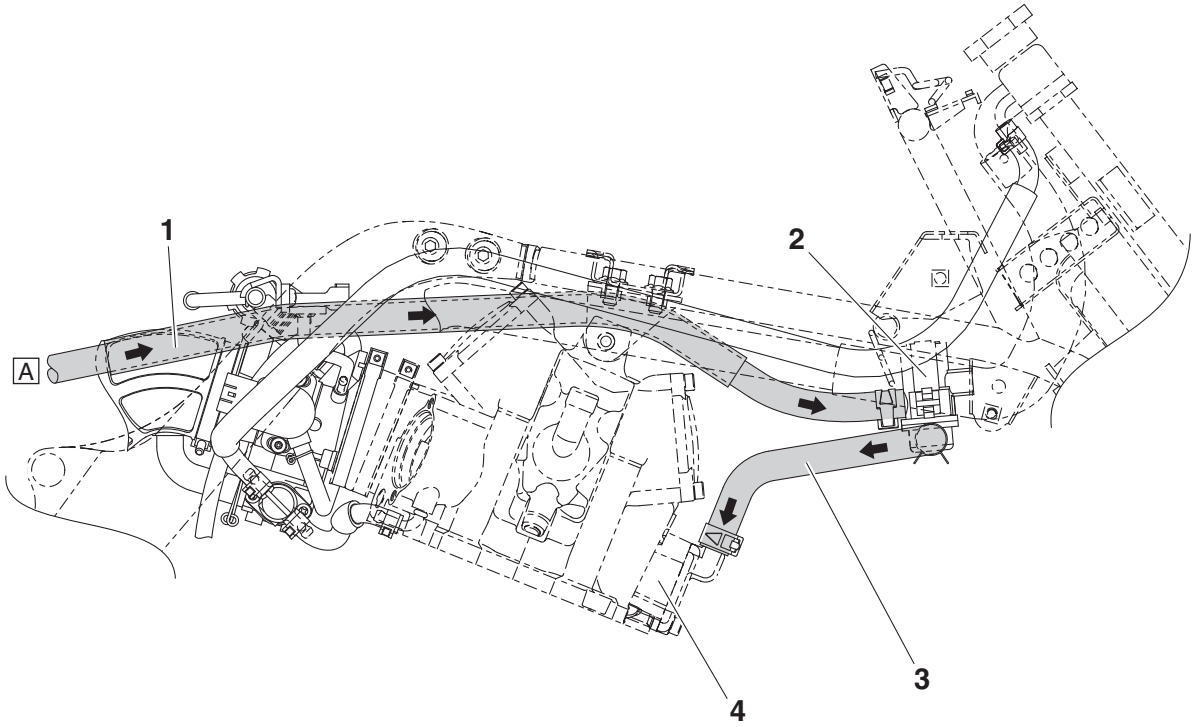

1. Air induction system hose (air filter case joint to air cut-off valve)
2. Air cut-off valve
3. Air induction system hose (air cut-off valve to reed valve)
4. Reed valve

A. from the air filter case joint

Removing the air cut-off valve

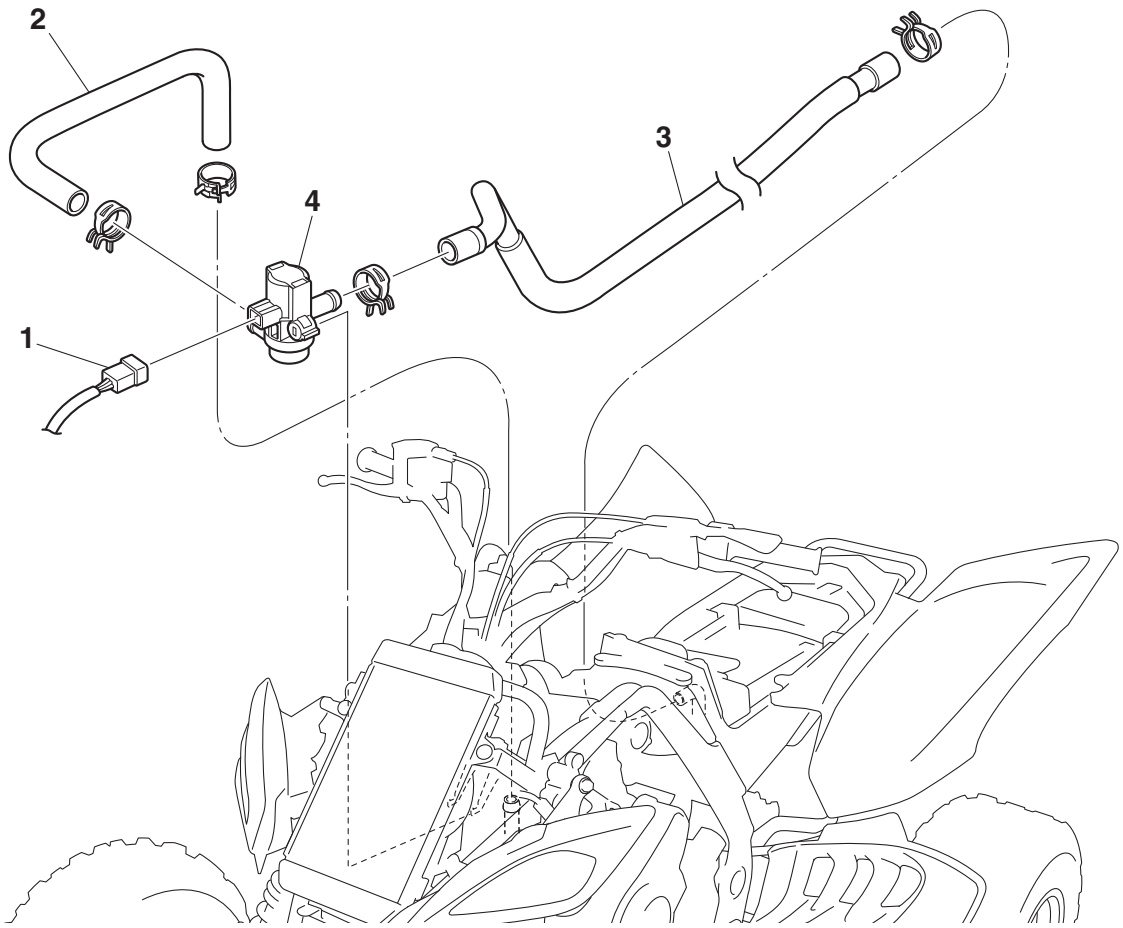

Order	Job/Parts to remove	Q'ty	Remarks
	Seat/Front panel/Fuel tank top panel/Front fender		Refer to "GENERAL CHASSIS" on page 4-1.
	Fuel tank shield		Refer to "FUEL TANK" on page 7-1.
1	Air cut-off valve coupler	1	Disconnect.
2	Air induction system hose (air cut-off valve joint to reed valve)	1	
3	Air induction system hose (air filter case joint to air cut-off valve)	1	
4	Air cut-off valve	1	
			For installation, reverse the removal procedure.

Removing the reed valve

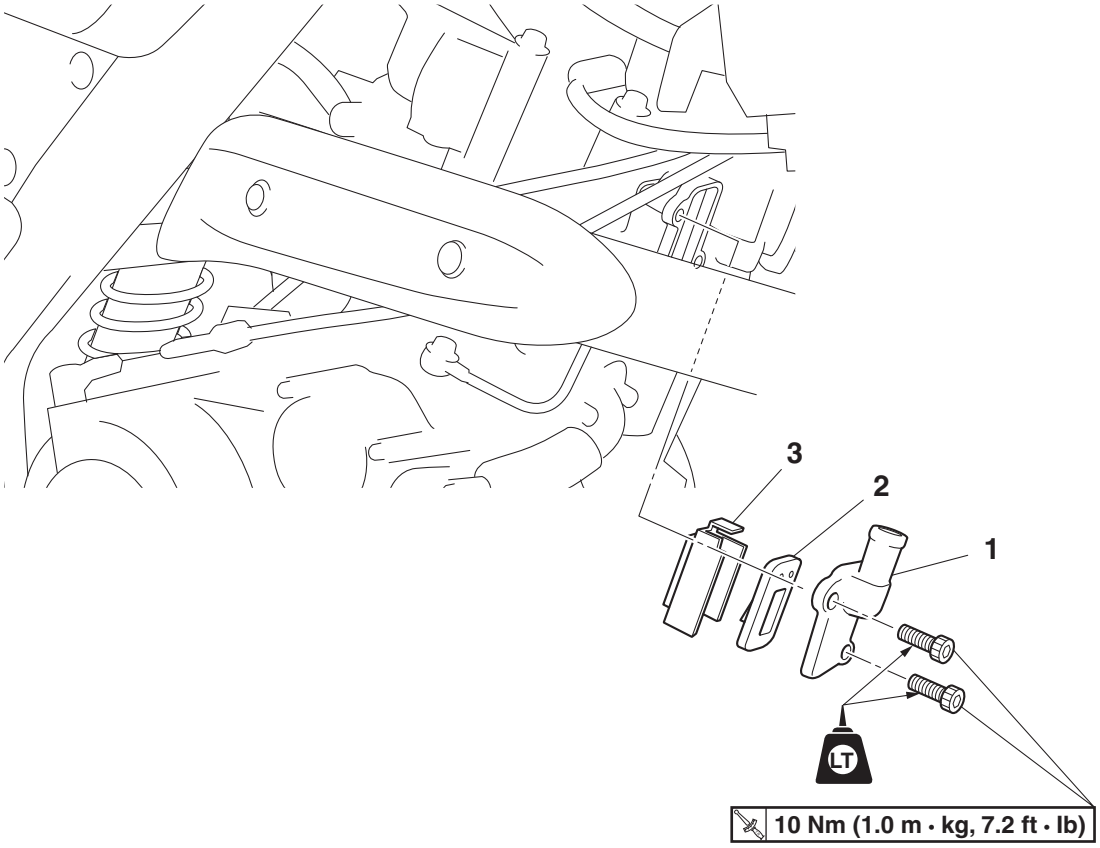

Order	Job/Parts to remove	Q'ty	Remarks
	Air induction system hose (air cut-off valve to reed valve)		Disconnect. Refer to "Removing the air cut-off valve".
1	Reed valve cover	1	
2	Reed valve assembly	1	
3	Reed valve plate	1	
			For installation, reverse the removal procedure.

EAS27060
CHECKING THE AIR INDUCTION SYSTEM

Air injection
The air induction system burns unburned exhaust gases by injecting fresh air (secondary air) into the exhaust port, reducing the emission of hydrocarbons. When there is negative pressure at the exhaust port, the reed valve opens, allowing secondary air to flow into the exhaust port. The required temperature for burning the unburned exhaust gases is approximately 600 to 700 °C (1112 to 1292 °F).

Air cut-off valve
The air cut-off valve is controlled by the signals from the ECU in accordance with the combustion conditions. Ordinarily, the air cut-off valve opens to allow the air to flow during idle and closes to cut-off the flow when the vehicle is being driven. However, if the coolant temperature is below the specified value, the air cut-off valve remains open and allows the air to flow into the exhaust pipe until the temperature becomes higher than the specified value.

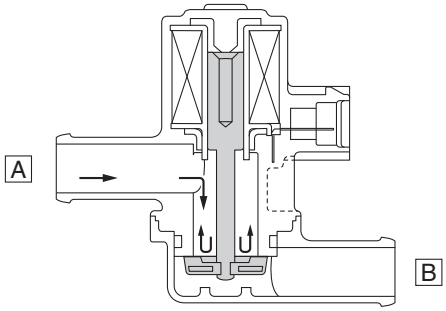

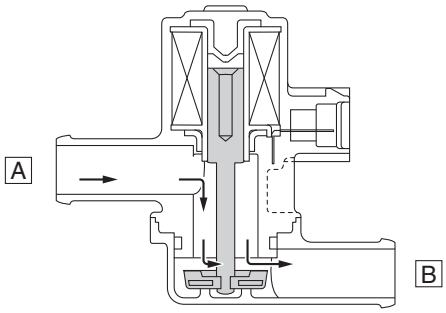

A. From the air filter case joint
B. To the reed valve

1. Check:
   - Hoses
     Loose connections → Connect properly.
     Cracks/damage → Replace.
2. Check:
   - Reed valve
   - Reed valve stopper
   - Reed valve seat
     Cracks/damage → Replace the reed valve assembly.
3. Check:
   - Air cut-off valve
     Cracks/damage → Replace.
4. Check:
   - Air induction system solenoid
     Refer to “CHECKING THE AIR INDUCTION SYSTEM SOLENOID” on page 8-77.

EAS27070
INSTALLING THE AIR INDUCTION SYSTEM
1. Install:
   - Reed valve plate “1”

TIP
Align the notch “a” in the reed valve plate with the projection “b” of the reed valve seat on the cylinder head.

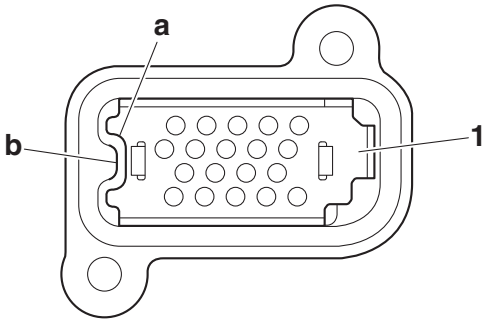

ELECTRICAL SYSTEM

EAS27090

IGNITION SYSTEM

EAS27100

CIRCUIT DIAGRAM

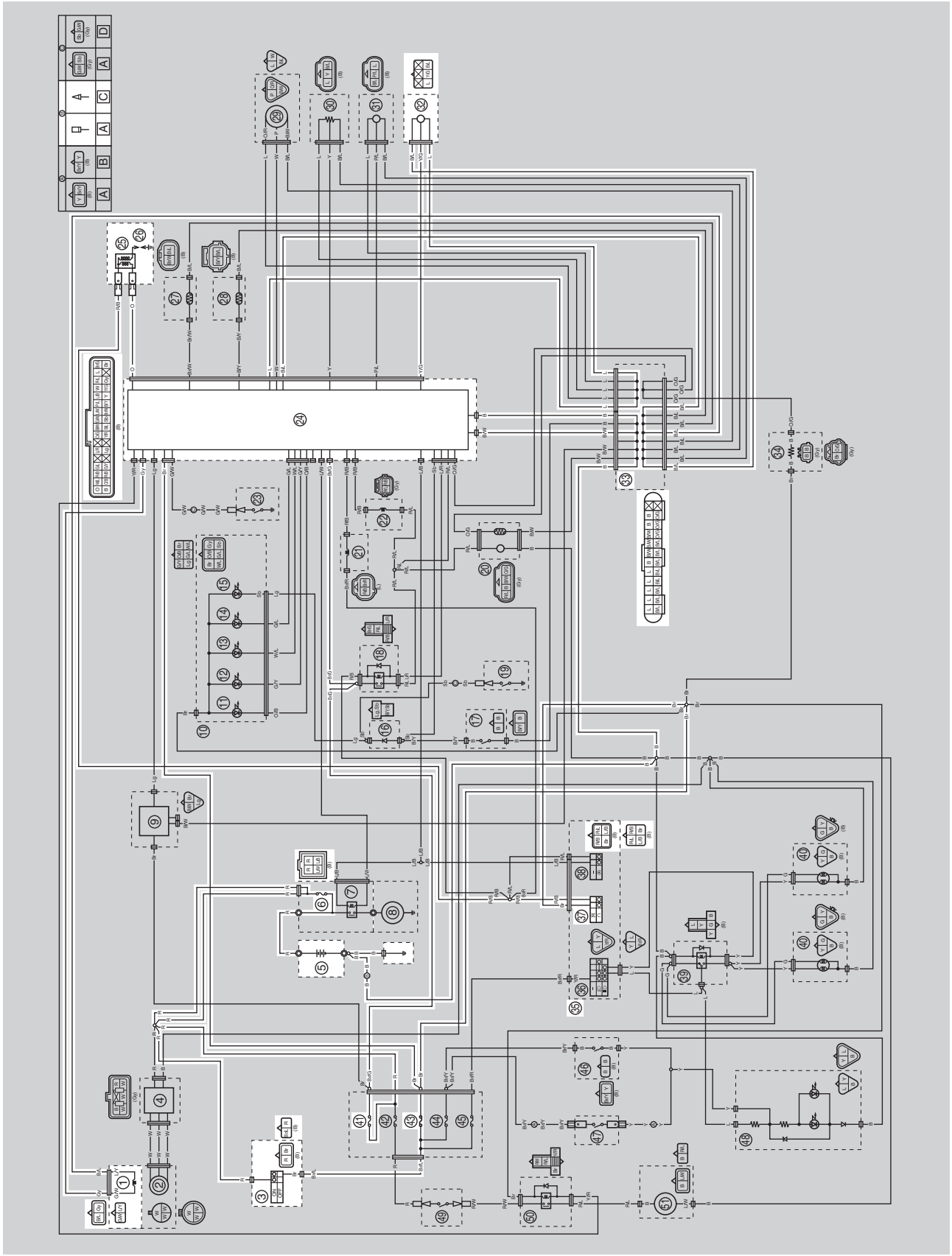

1. Crankshaft position sensor
3. Main switch
5. Battery
6. Main fuse
24. ECU (engine control unit)
25. Ignition coil
26. Spark plug
32. Lean angle sensor
33. Joint coupler
35. Handlebar switch
37. Engine stop switch
41. Fuel injection system fuse
43. Ignition fuse
A. Wire harness
C. Negative battery sub-wire harness

EAS27130

TROUBLESHOOTING

The ignition system fails to operate (no spark or intermittent spark).

TIP

- Before troubleshooting, remove the following part(s):

1. Seat
2. Fuel tank top panel
3. Fuel tank
4. Front panel
5. Front fender

1. Check the fuses. (Main and ignition) Refer to "CHECKING THE FUSES" on page 8-65.	NG →	Replace the fuse(s).
OK ↓		
2. Check the battery. Refer to "CHECKING AND CHARGING THE BATTERY" on page 8-66.	NG →	• Clean the battery terminals. • Recharge or replace the battery.
OK ↓		
3. Check the spark plug. Refer to "CHECKING THE SPARK PLUG" on page 3-7.	NG →	Re-gap, clean, or replace the spark plug.
OK ↓		
4. Check the ignition spark gap. Refer to "CHECKING THE IGNITION SPARK GAP" on page 8-71.	OK →	Ignition system is OK.
NG ↓		
5. Check the spark plug cap. Refer to "CHECKING THE SPARK PLUG CAP" on page 8-70.	NG →	Replace the spark plug cap.
OK ↓		
6. Check the ignition coil. Refer to "CHECKING THE IGNITION COIL" on page 8-70.	NG →	Replace the ignition coil.
OK ↓		
7. Check the crankshaft position sensor. Refer to "CHECKING THE CRANKSHAFT POSITION SENSOR" on page 8-72.	NG →	The crankshaft position sensor is faulty. Replace the crankshaft position sensor/stator assembly.
OK ↓		

8. Check the main switch. Refer to “CHECKING THE SWITCHES” on page 8-61.	NG →	Replace the main switch.
OK ↓		
9. Check the engine stop switch. Refer to “CHECKING THE SWITCHES” on page 8-61.	NG →	The engine stop switch is faulty. Replace the handlebar switch.
OK ↓		
10. Check the lean angle sensor. Refer to “CHECKING THE LEAN ANGLE SENSOR” on page 8-72.	NG →	Replace the lean angle sensor.
OK ↓		
11. Check the entire ignition system’s wiring. Refer to “CIRCUIT DIAGRAM” on page 8-1.	NG →	Properly connect or replace the wire harness.
OK ↓		
Replace the ECU.		

EAS27160

ELECTRIC STARTING SYSTEM

EAS27170

CIRCUIT DIAGRAM

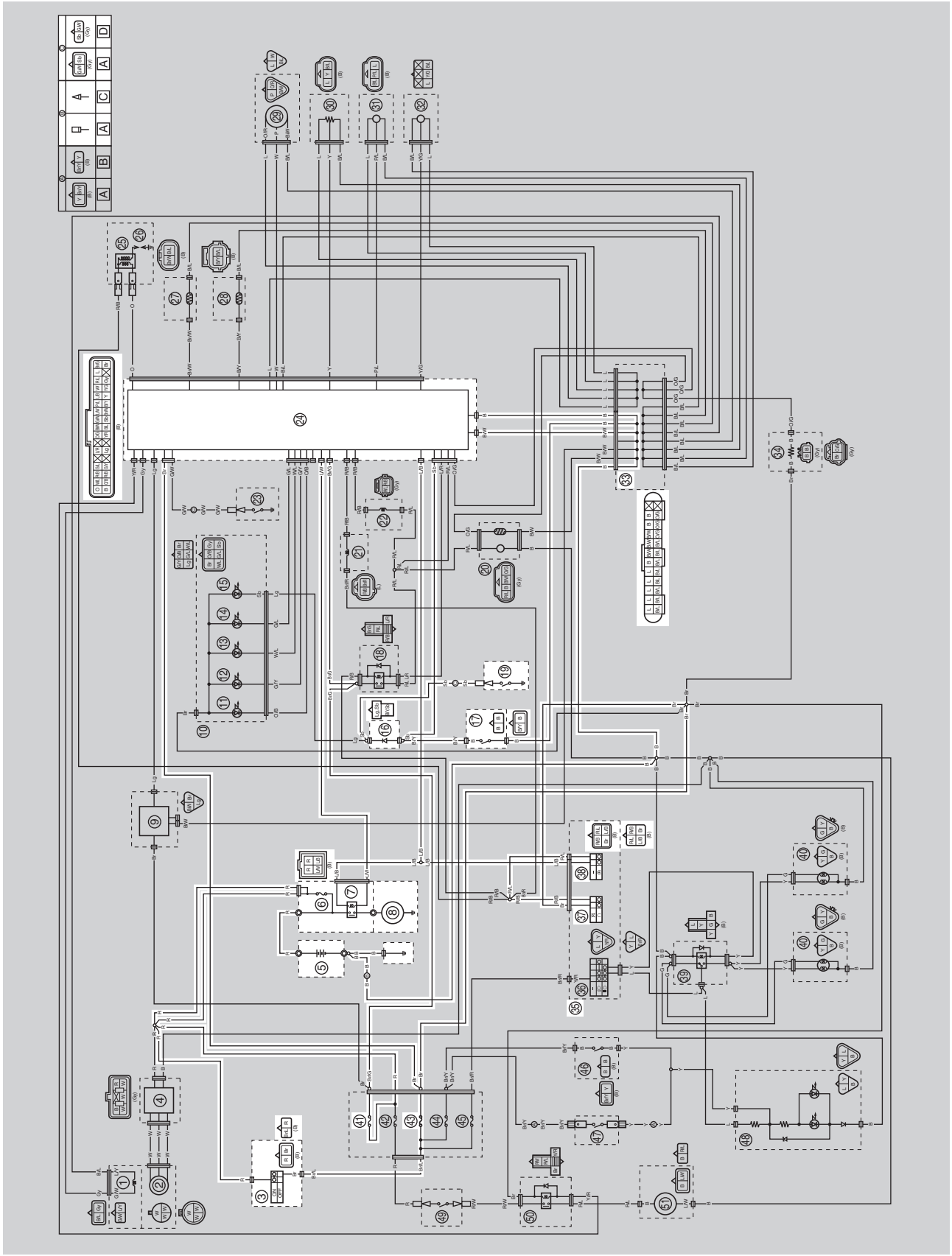

3. Main switch
5. Battery
6. Main fuse
7. Starter relay
8. Starter motor
16. Diode
17. Clutch switch
19. Neutral switch
24. ECU (engine control unit)
33. Joint coupler
35. Handlebar switch
37. Engine stop switch
38. Start switch
41. Fuel injection system fuse
43. Ignition fuse
A. Wire harness
C. Negative battery sub-wire harness
D. Neutral switch and reverse switch sub-wire harness

EAS27180

STARTING CIRCUIT CUT-OFF SYSTEM OPERATION

If the engine stop switch is set to "◯" and the main switch is set to "ON" (both switches are closed), the starter motor can only operate if at least one of the following conditions is met:

- The transmission is in neutral (the neutral switch is closed).
- The clutch lever is pulled to the handlebar (the clutch switch is closed).

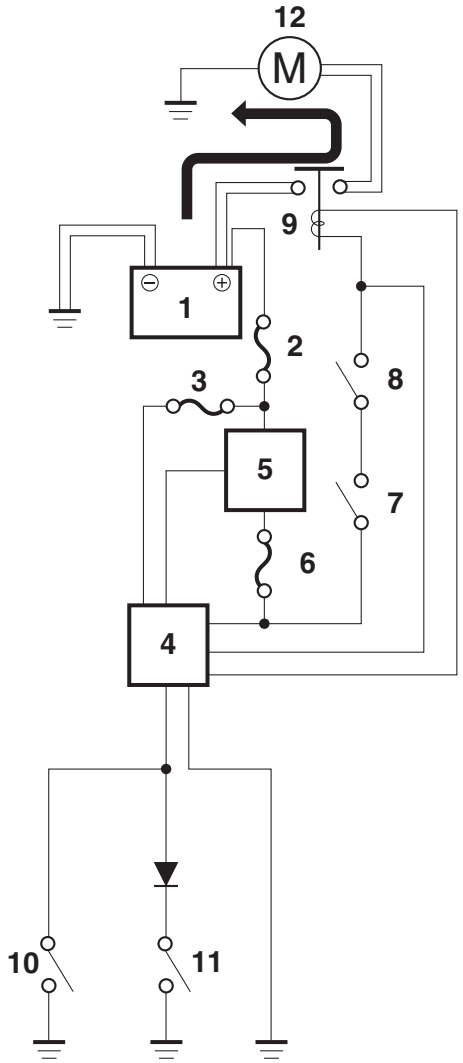

1. Battery
2. Main fuse
3. Fuel injection system fuse
4. ECU (engine control unit)
5. Main switch
6. Ignition fuse
7. Engine stop switch
8. Start switch
9. Starter relay
10. Clutch switch
11. Neutral switch
12. Starter motor

EAS27190

TROUBLESHOOTING

The starter motor fails to turn.

TIP

- Before troubleshooting, remove the following part(s):

1. Seat
2. Fuel tank top panel
3. Front fender

1. Check the fuses. (Main and ignition) Refer to "CHECKING THE FUSES" on page 8-65.	NG →	Replace the fuse(s).
OK ↓		
2. Check the battery. Refer to "CHECKING AND CHARGING THE BATTERY" on page 8-66.	NG →	• Clean the battery terminals. • Recharge or replace the battery.
OK ↓		
3. Check the starter motor. Refer to "CHECKING THE STARTER MOTOR" on page 5-38.	NG →	Repair or replace the starter motor.
OK ↓		
4. Check the diode. Refer to "CHECKING THE DIODE" on page 8-70.	NG →	Replace the diode.
OK ↓		
5. Check the starter relay. Refer to "CHECKING THE RELAYS" on page 8-69.	NG →	Replace the starter relay.
OK ↓		
6. Check the main switch. Refer to "CHECKING THE SWITCHES" on page 8-61.	NG →	Replace the main switch.
OK ↓		
7. Check the engine stop switch. Refer to "CHECKING THE SWITCHES" on page 8-61.	NG →	The engine stop switch is faulty. Replace the handlebar switch.
OK ↓		
8. Check the neutral switch. Refer to "CHECKING THE SWITCHES" on page 8-61.	NG →	Replace the neutral switch.
OK ↓		

9. Check the clutch switch. Refer to “CHECKING THE SWITCHES” on page 8-61.	NG →	Replace the clutch switch.
OK ↓		
10. Check the start switch. Refer to “CHECKING THE SWITCHES” on page 8-61.	NG →	The start switch is faulty. Replace the handlebar switch.
OK ↓		
11. Check the entire starting system wiring. Refer to “CIRCUIT DIAGRAM” on page 8-5.	NG →	Properly connect or replace the wire harness.
OK ↓		
Replace the ECU.		

EAS27200
CHARGING SYSTEM

EAS27210
CIRCUIT DIAGRAM

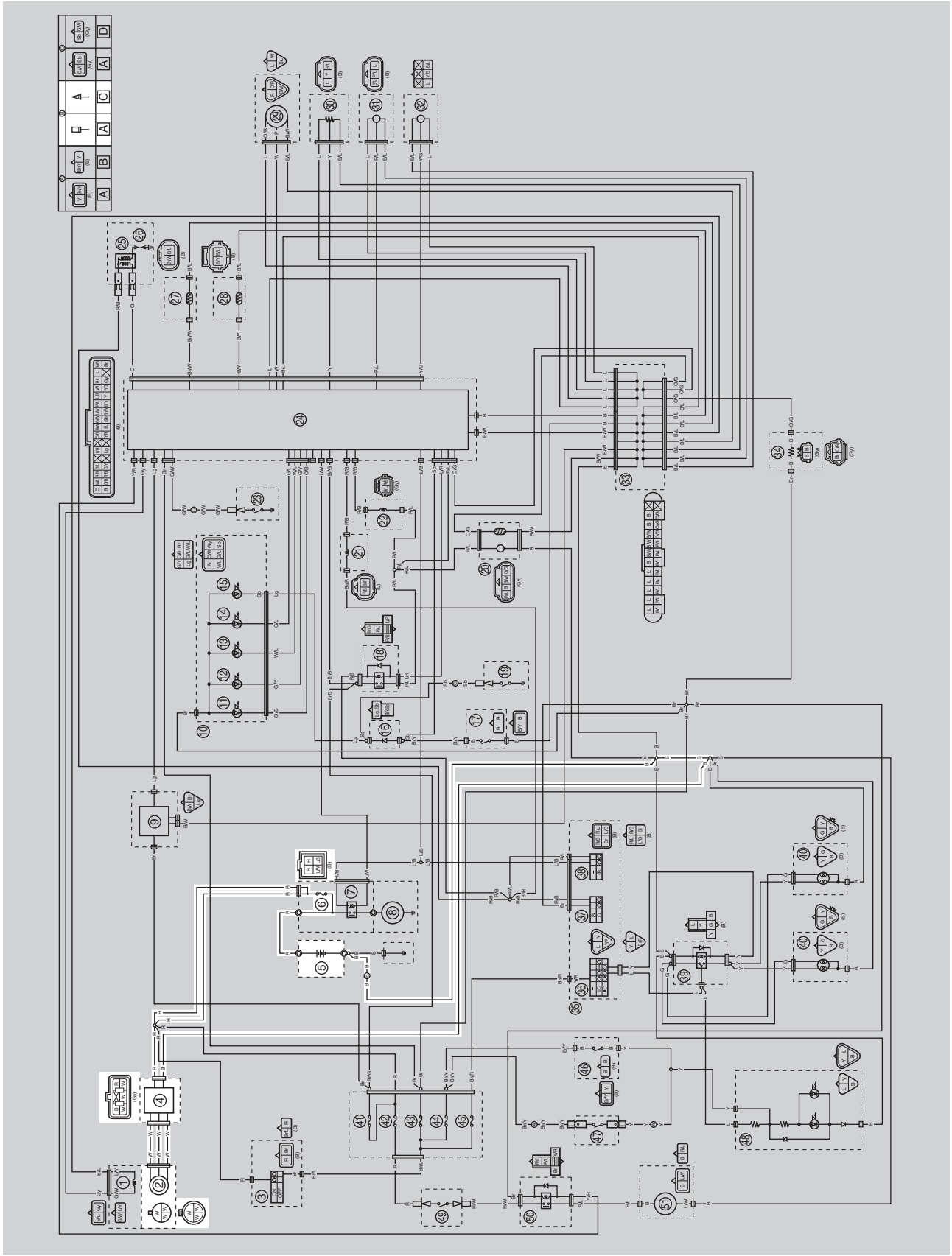

2. AC magneto
4. Rectifier/regulator
5. Battery
6. Main fuse
A. Wire harness
C. Negative battery sub-wire harness

EAS27230

TROUBLESHOOTING

The battery is not being charged.

TIP

- Before troubleshooting, remove the following part(s):

1. Seat
2. Fuel tank top panel
3. Front panel
4. Front fender

1. Check the fuse. (Main) Refer to "CHECKING THE FUSES" on page 8-65.	NG →	Replace the fuse.
OK ↓		
2. Check the battery. Refer to "CHECKING AND CHARGING THE BATTERY" on page 8-66.	NG →	• Clean the battery terminals. • Recharge or replace the battery.
OK ↓		
3. Check the stator coil. Refer to "CHECKING THE STATOR COIL" on page 8-73.	NG →	The stator coil is faulty. Replace the crankshaft position sensor/stator assembly.
OK ↓		
4. Check the rectifier/regulator. Refer to "CHECKING THE RECTIFIER/REGULATOR" on page 8-73.	NG →	Replace the rectifier/regulator.
OK ↓		
5. Check the entire charging system wiring. Refer to "CIRCUIT DIAGRAM" on page 8-11.	NG →	Properly connect or replace the wire harness.
OK ↓		
The charging system circuit is OK.		

EAS27240
LIGHTING SYSTEM

EAS27250
CIRCUIT DIAGRAM

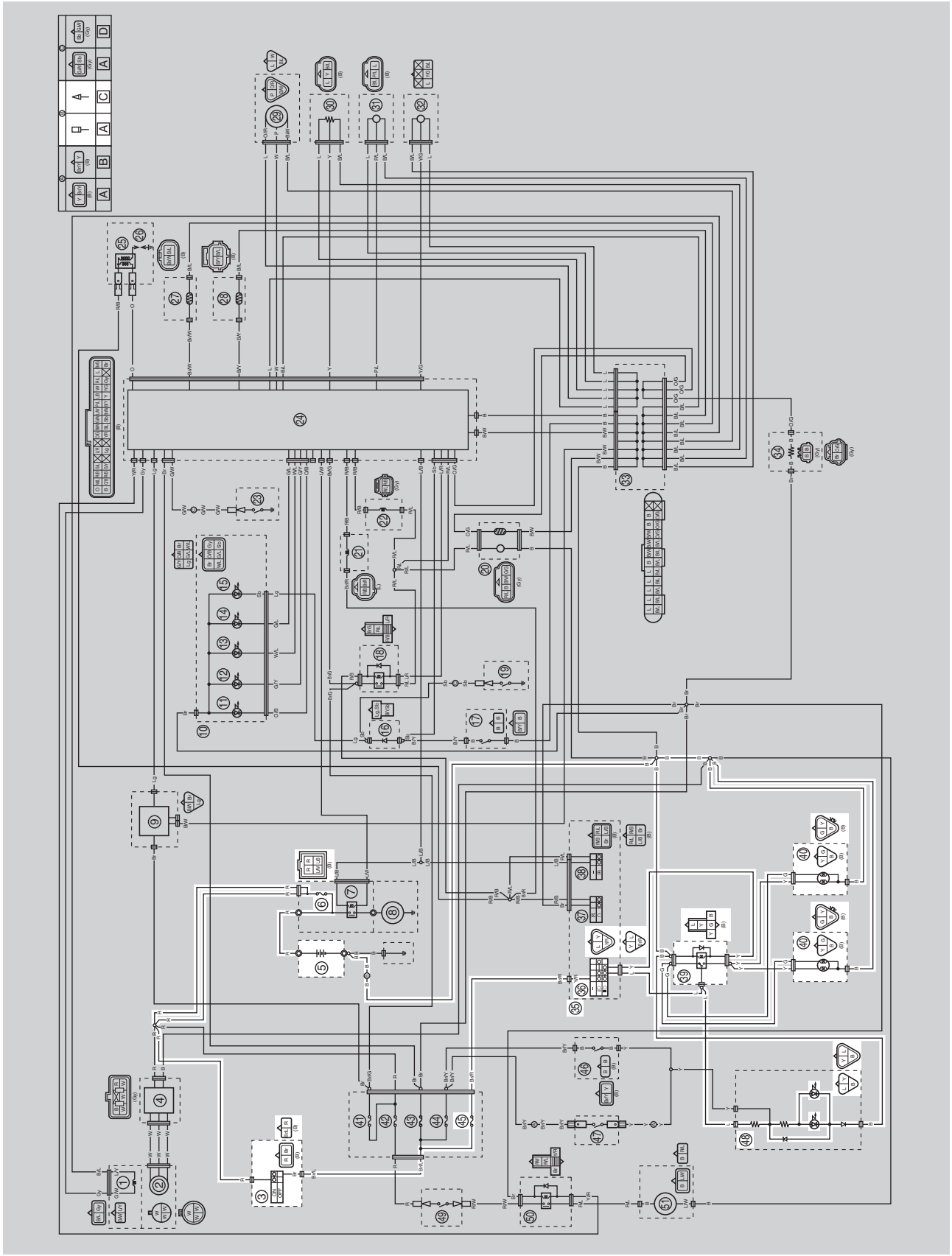

3. Main switch
5. Battery
6. Main fuse
35. Handlebar switch
36. Light switch
39. Headlight relay
40. Headlight
45. Headlight fuse
48. Tail/brake light
A. Wire harness
C. Negative battery sub-wire harness

EAS27260

TROUBLESHOOTING

Any of the following fail to light: headlight or taillight.

TIP

• Before troubleshooting, remove the following part(s):
1. Seat
2. Fuel tank top panel
3. Front panel
4. Front fender

1. Check the condition of each bulb and bulb socket. Refer to “CHECKING THE BULBS AND BULB SOCKETS” on page 8-64.	NG →	Replace the bulb(s) and bulb socket(s).
OK ↓		
2. Check the fuses. (Main and headlight) Refer to “CHECKING THE FUSES” on page 8-65.	NG →	Replace the fuse(s).
OK ↓		
3. Check the battery. Refer to “CHECKING AND CHARGING THE BATTERY” on page 8-66.	NG →	• Clean the battery terminals. • Recharge or replace the battery.
OK ↓		
4. Check the main switch. Refer to “CHECKING THE SWITCHES” on page 8-61.	NG →	Replace the main switch.
OK ↓		
5. Check the light switch. Refer to “CHECKING THE SWITCHES” on page 8-61.	NG →	The light switch is faulty. Replace the handlebar switch.
OK ↓		
6. Check the headlight relay. Refer to “CHECKING THE RELAYS” on page 8-69.	NG →	Replace the headlight relay.
OK ↓		
7. Check the entire lighting system wiring. Refer to “CIRCUIT DIAGRAM” on page 8-15.	NG →	Properly connect or replace the wire harness.
OK ↓		
Replace the tail/brake light assembly.		

EAS27270
SIGNALING SYSTEM

EAS27280
CIRCUIT DIAGRAM

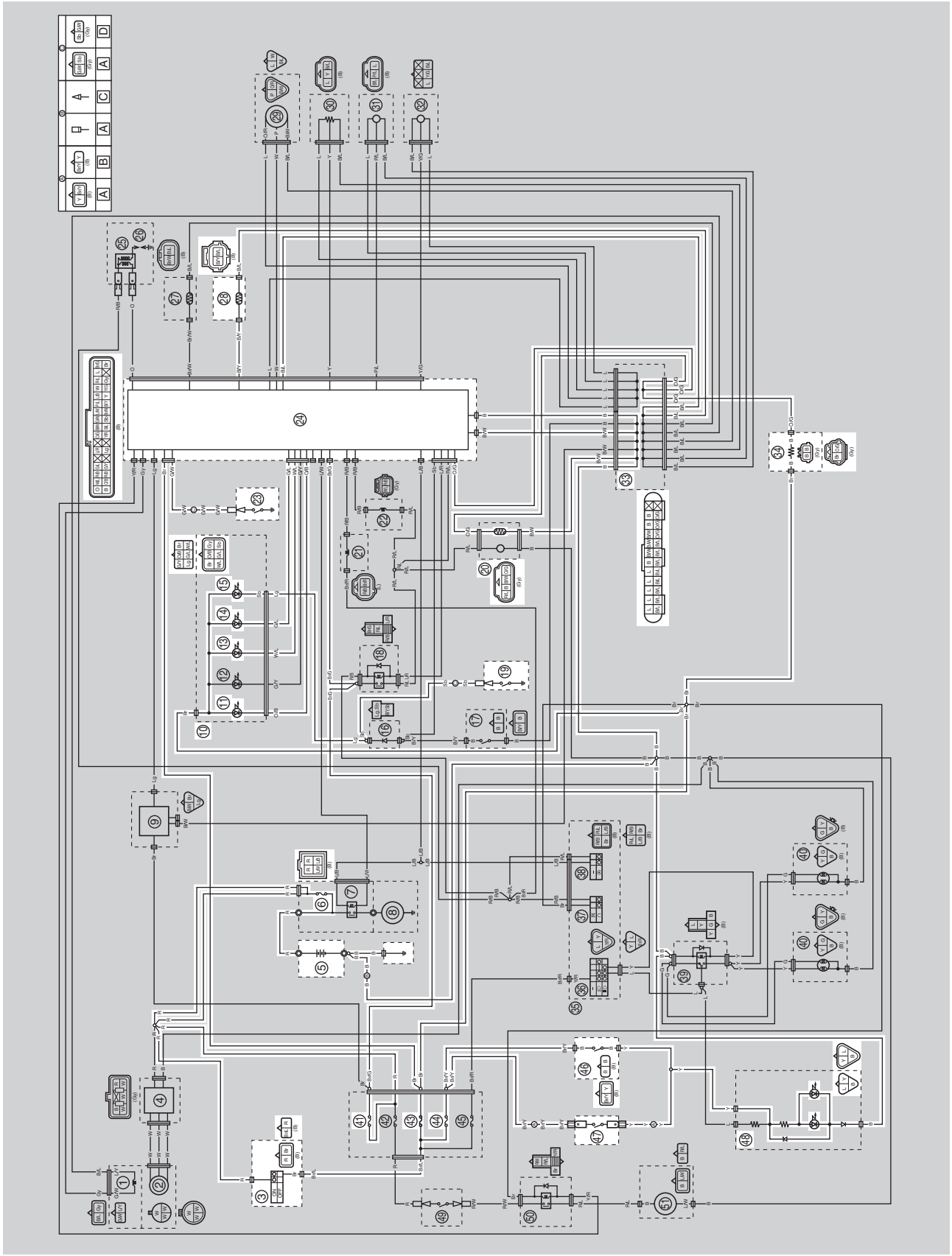

3. Main switch
5. Battery
6. Main fuse
10. Indicator light assembly
11. Fuel level warning light
13. Coolant temperature warning light
14. Reverse indicator light
15. Neutral indicator light
19. Neutral switch
20. Fuel pump
23. Reverse switch
24. ECU (engine control unit)
28. Coolant temperature sensor
33. Joint coupler
34. Resistor
41. Fuel injection system fuse
43. Ignition fuse
44. Signaling system fuse
46. Rear brake light switch
47. Front brake light switch
48. Tail/brake light

A. Wire harness
B. Front brake light switch sub-wire harness
C. Negative battery sub-wire harness
D. Neutral switch and reverse switch sub-wire harness

EAS27290

TROUBLESHOOTING

• Any of the following fail to light: warning light, brake light or an indicator light.

TIP

• Before troubleshooting, remove the following part(s):
1. Seat
2. Fuel tank top panel
3. Front panel
4. Front fender

1. Check the fuses. (Main, ignition and signaling system) Refer to "CHECKING THE FUSES" on page 8-65.	NG →	Replace the fuse(s).
OK ↓		
2. Check the battery. Refer to "CHECKING AND CHARGING THE BATTERY" on page 8-66.	NG →	• Clean the battery terminals. • Recharge or replace the battery.
OK ↓		
3. Check the main switch. Refer to "CHECKING THE SWITCHES" on page 8-61.	NG →	Replace the main switch.
OK ↓		
4. Check the entire signaling system wiring. Refer to "CIRCUIT DIAGRAM" on page 8-19.	NG →	Properly connect or replace the wire harness.
OK ↓		
Check the condition of each of the signaling system circuits. Refer to "Checking the signaling system".		

Checking the signaling system

The brake light fails to come on.

1. Check the front brake light switch. Refer to "CHECKING THE SWITCHES" on page 8-61.	NG →	Replace the front brake light switch.
OK ↓		
2. Check the rear brake light switch. Refer to "CHECKING THE SWITCHES" on page 8-61.	NG →	Replace the rear brake light switch.
OK ↓		

3. Check the entire signaling system wiring. Refer to “CIRCUIT DIAGRAM” on page 8-19.	NG →	Properly connect or replace the wire harness.
OK ↓		
Replace the tail/brake light assembly.		

The neutral indicator light fails to come on.

1. Check the neutral switch. Refer to “CHECKING THE SWITCHES” on page 8-61.	NG →	Replace the neutral switch.
OK ↓		
2. Check the diode. Refer to “CHECKING THE DIODE” on page 8-70.	NG →	Replace the diode.
OK ↓		
3. Check the entire signaling system wiring. Refer to “CIRCUIT DIAGRAM” on page 8-19.	NG →	Properly connect or replace the wire harness.
OK ↓		
Replace the indicator light assembly.		

The reverse indicator light fails to come on.

1. Check the reverse switch. Refer to “CHECKING THE SWITCHES” on page 8-61.	NG →	Replace the reverse switch.
OK ↓		
2. Check the entire signaling system wiring. Refer to “CIRCUIT DIAGRAM” on page 8-19.	NG →	Properly connect or replace the wire harness.
OK ↓		
Replace the indicator light assembly or ECU.		

The coolant temperature warning light fails to come on.

1. Check the coolant temperature sensor. Refer to “CHECKING THE COOLANT TEMPERATURE SENSOR” on page 8-75.	NG →	Replace the coolant temperature sensor.
OK ↓		

2. Check the entire signaling system wiring. Refer to “CIRCUIT DIAGRAM” on page 8-19.	NG →	Properly connect or replace the wire harness.
OK ↓		
Replace the indicator light assembly or ECU.		

The fuel level warning light fails to come on.

1. Check the fuel sender. Refer to “CHECKING THE FUEL SENDER” on page 8-74.	NG →	Replace the fuel pump.
OK ↓		
2. Check the entire signaling system wiring. Refer to “CIRCUIT DIAGRAM” on page 8-19.	NG →	Properly connect or replace the wire harness.
OK ↓		
Replace the indicator light assembly or ECU.		

EAS27300
COOLING SYSTEM

EAS27310
CIRCUIT DIAGRAM

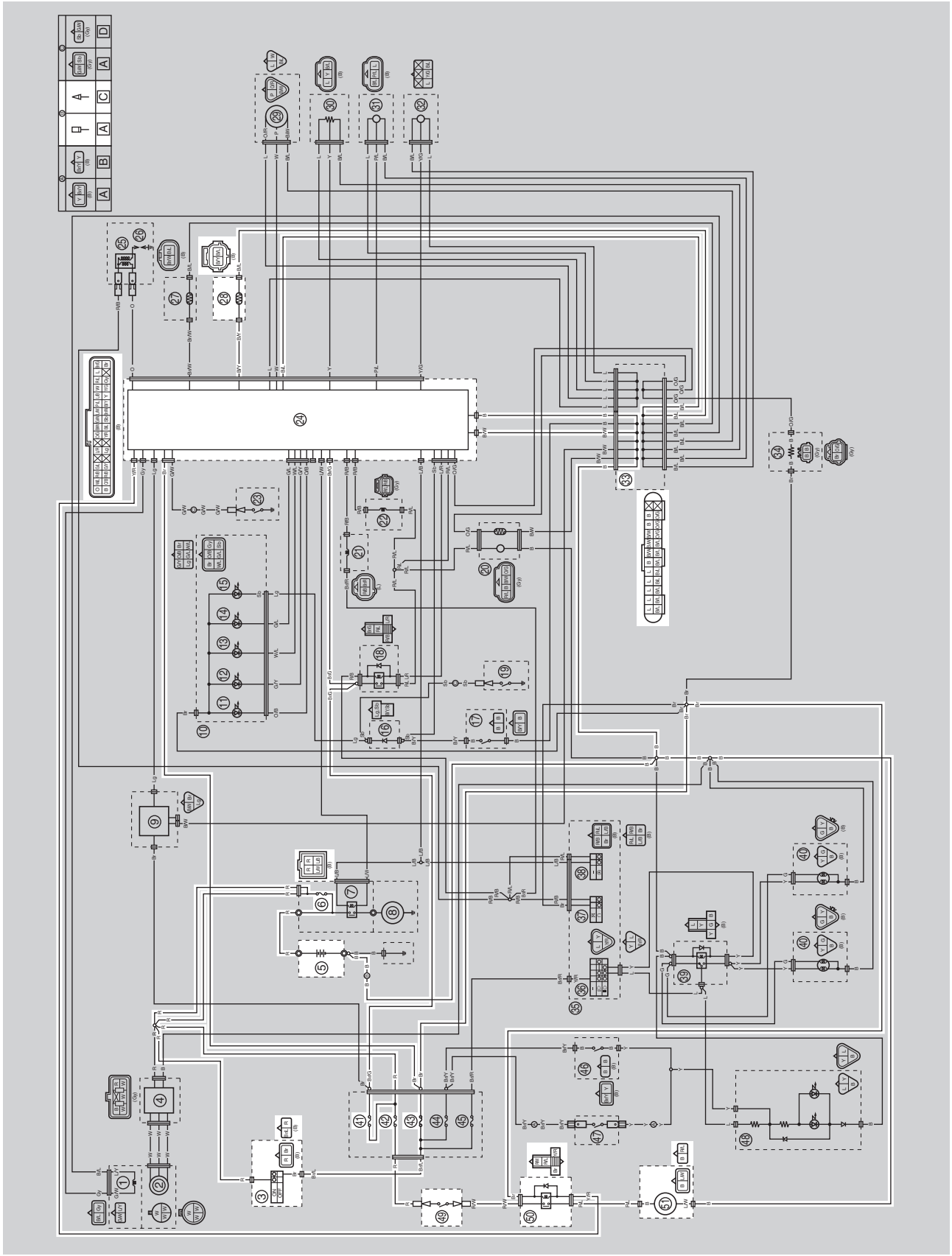

3. Main switch
5. Battery
6. Main fuse
24. ECU (engine control unit)
28. Coolant temperature sensor
33. Joint coupler
41. Fuel injection system fuse
42. Radiator fan motor fuse
43. Ignition fuse
49. Circuit breaker (fan motor)
50. Radiator fan motor relay
51. Radiator fan motor
A. Wire harness
C. Negative battery sub-wire harness

EAS27320

TROUBLESHOOTING

The radiator fan motor fails to turn.

TIP

- Before troubleshooting, remove the following part(s):

1. Seat
2. Fuel tank top panel
3. Front panel
4. Front fender

1. Check the fuses. (Main and ignition) Refer to "CHECKING THE FUSES" on page 8-65.	NG →	Replace the fuse(s).
OK ↓		
2. Check the battery. Refer to "CHECKING AND CHARGING THE BATTERY" on page 8-66.	NG →	• Clean the battery terminals. • Recharge or replace the battery.
OK ↓		
3. Check the main switch. Refer to "CHECKING THE SWITCHES" on page 8-61.	NG →	Replace the main switch.
OK ↓		
4. Check the radiator fan motor. Refer to "CHECKING THE RADIATOR FAN MOTOR" on page 8-75.	NG →	The radiator fan motor is faulty and must be replaced.
OK ↓		
5. Check the radiator fan motor relay. Refer to "CHECKING THE RELAYS" on page 8-69.	NG →	Replace the radiator fan motor relay.
OK ↓		
6. Check the circuit breaker (fan motor). Refer to "CHECKING THE RADIATOR FAN MOTOR CIRCUIT BREAKER" on page 8-75.	NG →	Replace the radiator fan motor circuit breaker.
OK ↓		
7. Check the coolant temperature sensor. Refer to "CHECKING THE COOLANT TEMPERATURE SENSOR" on page 8-75.	NG →	Replace the coolant temperature sensor.
OK ↓		

8. Check the entire cooling system wiring.
   Refer to “CIRCUIT DIAGRAM” on page 8-25.

NG → Properly connect or replace the wire harness.

OK ↓

Replace the ECU.

EAS27330
FUEL INJECTION SYSTEM

EAS27340
CIRCUIT DIAGRAM

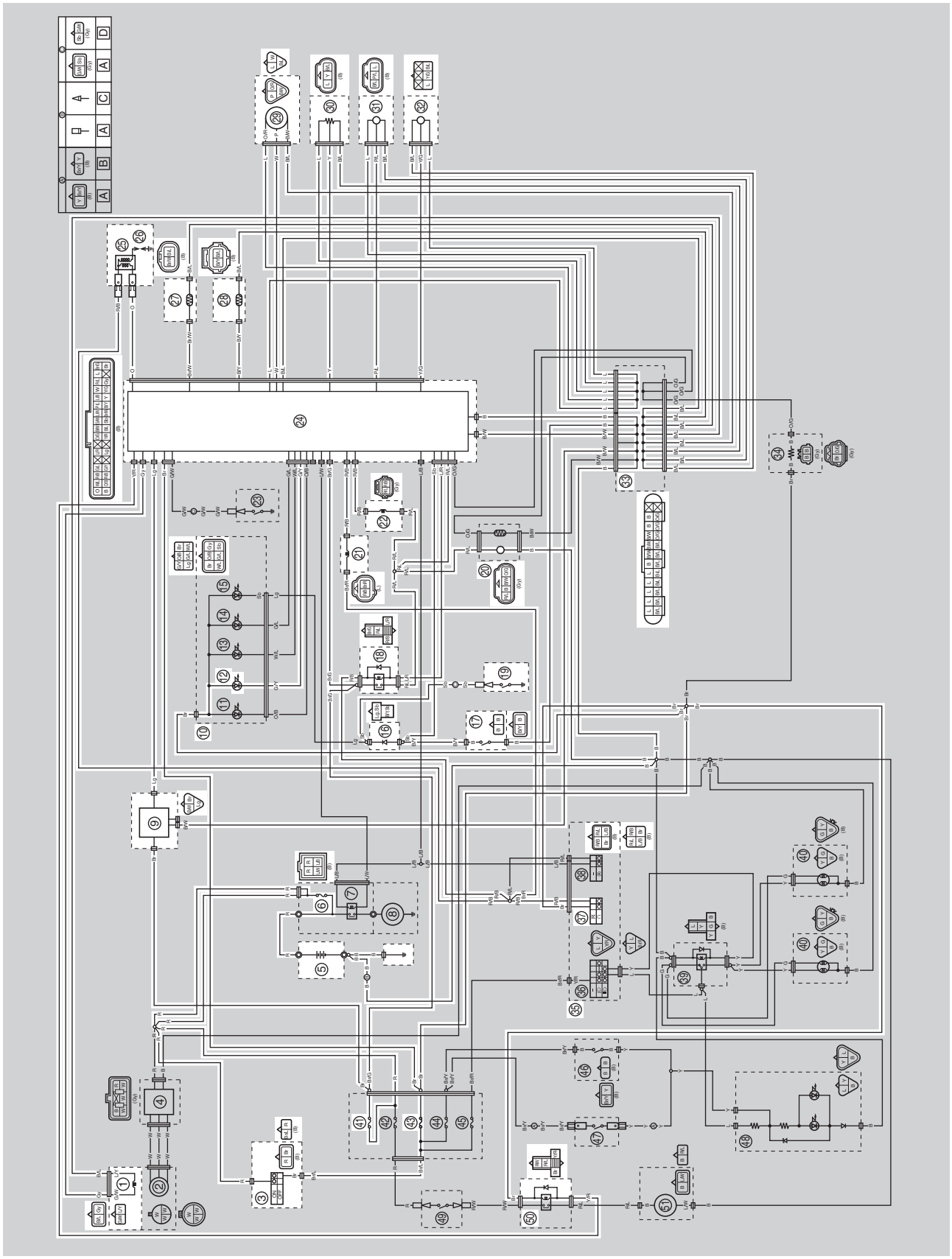

1. Crankshaft position sensor
3. Main switch
5. Battery
6. Main fuse
9. Yamaha diagnostic tool coupler
10. Indicator light assembly
12. Engine trouble warning light
16. Diode
17. Clutch switch
18. Fuel pump relay
19. Neutral switch
20. Fuel pump
21. Air induction system solenoid
22. Fuel injector
24. ECU (engine control unit)
25. Ignition coil
26. Spark plug
27. Intake air temperature sensor
28. Coolant temperature sensor
29. Speed sensor
30. Throttle position sensor
31. Intake air pressure sensor
32. Lean angle sensor
33. Joint coupler
35. Handlebar switch
37. Engine stop switch
41. Fuel injection system fuse
43. Ignition fuse
50. Radiator fan motor relay

A. Wire harness
C. Negative battery sub-wire harness
D. Neutral switch and reverse switch sub-wire harness

EAS1PE1001

ECU SELF-DIAGNOSTIC FUNCTION

The ECU is equipped with a self-diagnostic function in order to ensure that the fuel injection system is operating normally. If this function detects a malfunction in the system, it immediately operates the engine under substitute characteristics and illuminates the engine trouble warning light to alert the rider that a malfunction has occurred in the system. Once a malfunction has been detected, a fault code is stored in the memory of the ECU.

- To inform the rider that the fuel injection system is not functioning, the engine trouble warning light flashes when the start switch is being pushed to start the engine.
- If a malfunction is detected in the system by the self-diagnostic function, the ECU provides an appropriate substitute characteristic operation, and alerts the rider of the detected malfunction by illuminating the engine trouble warning light.
- After the engine has been stopped, the lowest fault code number is indicated by the engine trouble warning light (or displayed on the Yamaha diagnostic tool). It remains stored in the memory of the ECU until it is deleted.

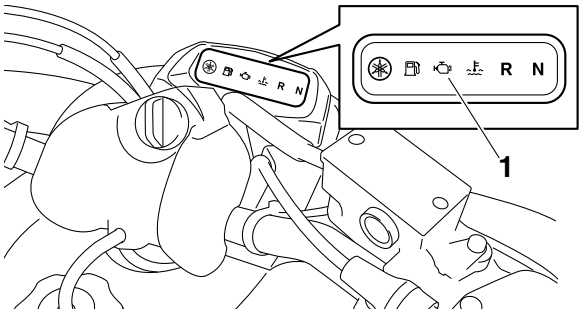

1. Engine trouble warning light

Engine trouble warning light fault code indication

Digit of 10: Cycles of 1 sec. on and 1.5 sec. off.
Digit of 1: Cycles of 0.5 sec. on and 0.5 sec. off.

Example: 42

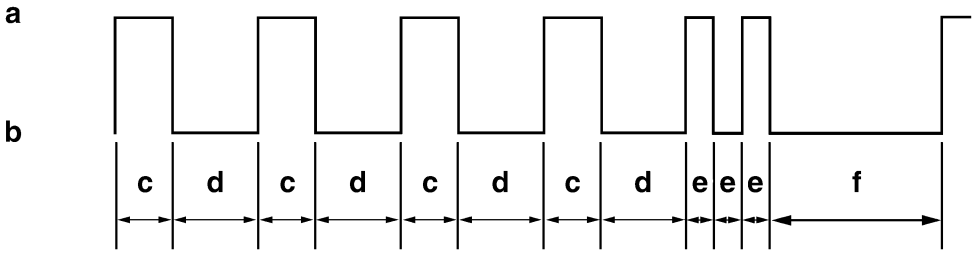

a. Light on
b. Light off
c. 1 sec.
d. 1.5 sec.
e. 0.5 sec.
f. 3 sec.

Engine trouble warning light indication and fuel injection system operation

Warning light indication	ECU operation	Fuel injection operation	Vehicle operation
Flashing*	Warning provided when unable to start engine	Operation stopped	Cannot be operated
Remains on	Malfunction detected	Operated with substitute characteristics in accordance with the description of the malfunction	Can or cannot be operated depending on the fault code

* The warning light flashes when any one of the conditions listed below is present and the start switch is pushed:

12:	Crankshaft position sensor	41:	Lean angle sensor (open or short-circuit)
30:	Lean angle sensor (latch up detected)	50:	ECU internal malfunction (memory check error)

Checking the engine trouble warning light

The engine trouble warning light comes on for around 2 seconds after the main switch has been turned to “ON” and it comes on while the start switch is being pushed. If the warning light does not come on under these conditions, the warning light (LED) may be defective.

ECU detects an abnormal signal from a sensor

If the ECU detects an abnormal signal from a sensor while the vehicle is being driven, the ECU illuminates the engine trouble warning light and provides the engine with alternate operating instructions that are appropriate for the type of malfunction.

When an abnormal signal is received from a sensor, the ECU processes the specified values that are programmed for each sensor in order to provide the engine with alternate operating instructions that enable the engine to continue operating or stop operating, depending on the conditions.

EAS27400

TROUBLESHOOTING METHOD

The engine operation is not normal and the engine trouble warning light comes on.

1. Check:
   - Fault code number

▼▼▼▼▼▼▼▼▼▼▼▼▼▼▼▼▼▼▼▼▼▼▼▼▼▼▼▼▼▼▼▼▼

a. Check the fault code number displayed on the Yamaha diagnostic tool.
b. Identify the faulty system with the fault code number.
c. Identify the probable cause of malfunction.

▲▲▲▲▲▲▲▲▲▲▲▲▲▲▲▲▲▲▲▲▲▲▲▲▲▲▲▲▲▲▲▲▲

2. Check and repair the probable cause of the malfunction.

Fault code No. YES	Fault code No. NO
Check and repair. Refer to “TROUBLESHOOTING DETAILS” on page 8-37. Monitor the operation of the sensors and actuators in the diagnostic mode.	Check and repair.

3. Perform the reinstatement action for the fuel injection system.
   Refer to “Confirmation of service completion” in the appropriate table in “TROUBLESHOOTING DETAILS” on page 8-37.
4. Turn the main switch to “OFF”, and back to “ON”, and then check that no fault code number is displayed.

TIP

If another fault code number is displayed, repeat steps (1) to (4) until no fault code number is displayed.

5. Erase the malfunction history in the diagnostic mode (code No. 62). Refer to “SELF-DIAGNOSTIC FUNCTION AND DIAGNOSTIC CODE TABLE” on page 9-5.

TIP

Turning the main switch to “OFF” will not erase the malfunction history.

The engine operation is not normal but the engine trouble warning light does not come on.

1. Check the operation of following sensors and actuators in the diagnostic mode.

01: Throttle position sensor (throttle angle)
30: Ignition coil
36: Fuel injector

If a malfunction is detected in the sensors or actuators, repair or replace all faulty parts.
If no malfunction is detected in the sensors and actuators, check and repair inner parts of the engine.

EAS1XC1028

YAMAHA DIAGNOSTIC TOOL

This model uses the Yamaha diagnostic tool to identify malfunctions.
For information about using the Yamaha diagnostic tool, refer to the operation manual that is included with the tool.

	**Yamaha diagnostic tool (US)** **90890-03234**

Features of the Yamaha diagnostic tool

You can use the Yamaha diagnostic tool to identify malfunctions quicker than with conventional methods.
By connecting the adapter interface, which is connected to the USB port of a computer, to a vehicle's ECU using the communication cable, you can display information that is necessary for identifying malfunctions and for maintenance to display on the computer. The displayed information includes the sensor output data and information recorded in the ECU.

Functions of the Yamaha diagnostic tool

Fault diagnosis mode:	Fault codes recorded on the ECU are read, and the contents are displayed.
Function diagnostic mode:	Check the operation of the output value of each sensor and actuator.
Inspection mode:	Determine whether each sensor or actuator is functioning properly.
CO adjustment mode:	Adjust the concentration of CO admissions during idling.
Monitoring mode:	Displays a graph of sensor output values for actual operating conditions.
Logging mode:	Records and saves the sensor output value in actual driving conditions.
View log:	Displays the logging data.
ECU rewrite:	If necessary, the ECU is rewritten using ECU rewrite data provided by Yamaha. Ignition timing adjustment, etc. cannot be changed from the vehicle's original state.

However, the Diagnostic Tool cannot be used to freely change the basic vehicle functions, such as adjusting the ignition timing.

Connecting the Yamaha diagnostic tool

Remove the protective cap "1", and then connect the Yamaha diagnostic tool to the coupler.

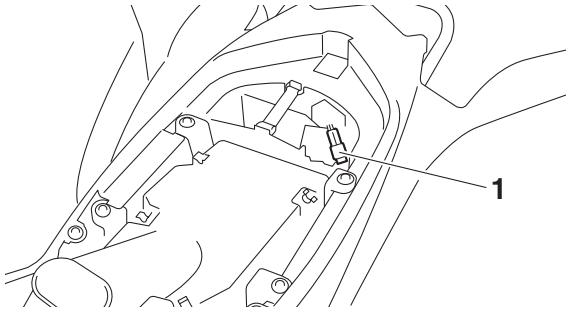

Operation of the Yamaha diagnostic tool (Malfunction mode)

Malfunction results are displayed in the top part of the window area.

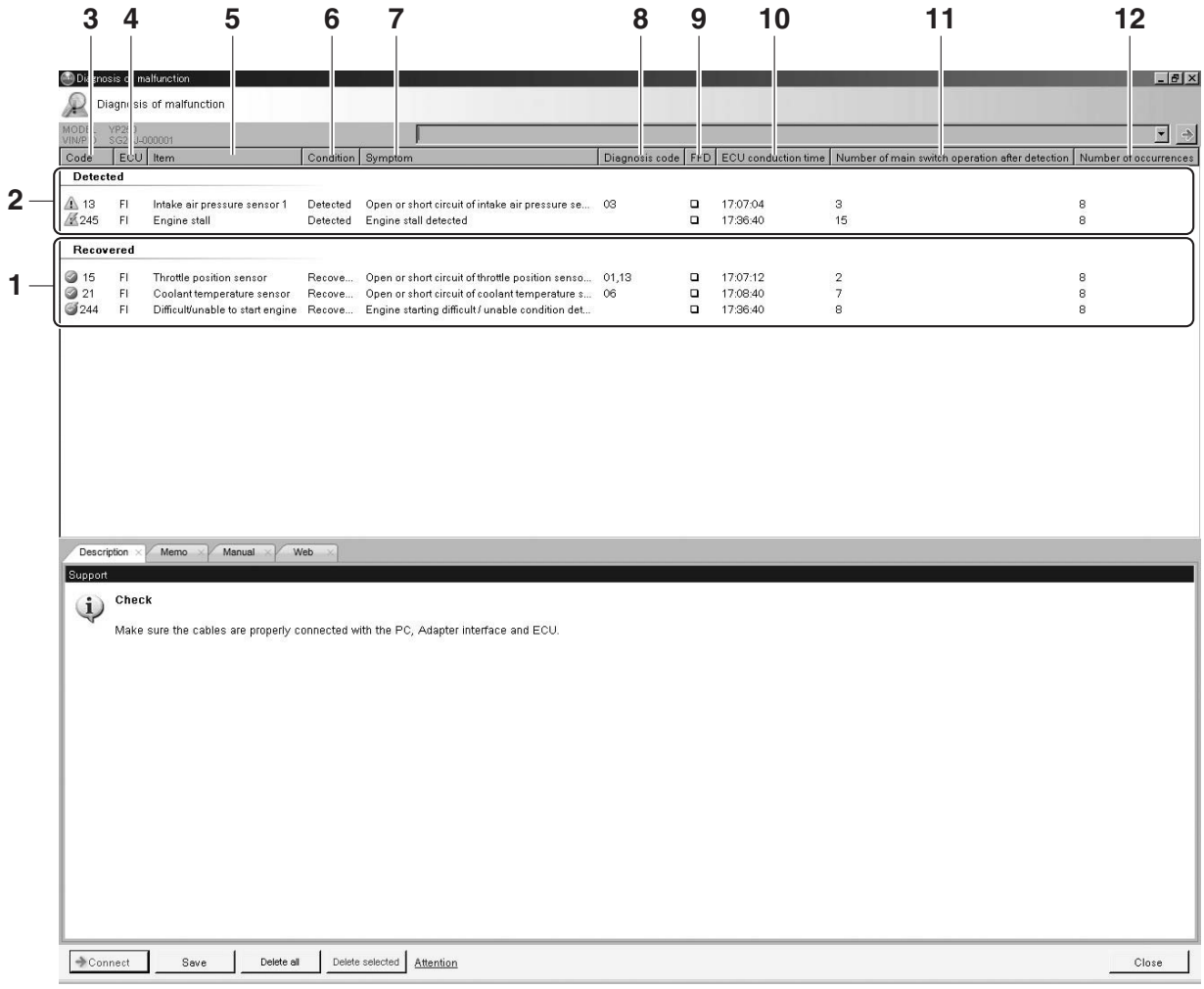

1. Recovered
   The item list of the malfunction detected in the past (already recovered) are displayed.
2. Detected
   The item list of the malfunction currently occurred are displayed.
3. Code
   The following icons and the fault code numbers for the detected malfunctions are displayed.

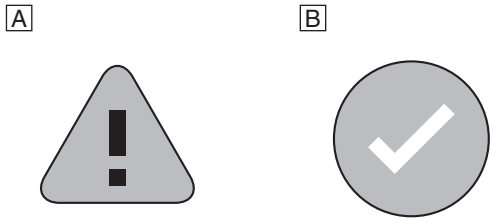

A. Detected malfunction
B. Recovered malfunction

4. ECU
   The types of the control units are displayed.

5. Item
   The item names of the detected malfunction are displayed.
6. Condition
   The current conditions are displayed. (Detected/Recovered)
7. Symptom
   The symptoms of the detected malfunction are displayed.
8. Diagnosis code
   The diagnosis codes related to the detected malfunction are displayed.
9. FFD (only for models that can display freeze frame data)
   The mark "❑" is displayed when the freeze frame data is available.
10. ECU conduction time (hour: minute: second)
    The total ECU conduction time (total hours the vehicle's main switch was ON) when the malfunction was detected is displayed.
11. Number of main switch operation after detection
    The number of times the main switch was turned on between the malfunction detection and code reading is displayed.
12. Number of occurrences
    The number of malfunction occurrences between the malfunction detection and code reading is displayed.

EAS27481

TROUBLESHOOTING DETAILS

This section describes the measures per fault code number displayed on the Yamaha diagnostic tool. Check and service the items or components that are the probable cause of the malfunction following the order given.

After the check and service of the malfunctioning part have been completed, reset the Yamaha diagnostic tool display according to the reinstatement method.

Fault code No.:

Code number displayed on the FI diagnostic tool when the engine failed to work normally. Refer to "Self-diagnostic function table" on page 9-5.

Diagnostic code No.:

Diagnostic code number to be used when the diagnostic mode is operated. Refer to "SELF-DIAGNOSTIC FUNCTION AND DIAGNOSTIC CODE TABLE" on page 9-5.

Fault code No.	**12**
Item	**Crankshaft position sensor: no normal signals are received from the crankshaft position sensor.**
Fail-safe system	Unable to start engine
	Unable to drive vehicle
Diagnostic code No.	—
Indicated	—
Procedure	—

Item	Probable cause of malfunction and check	Maintenance job	Confirmation of service completion
1	Connection of crankshaft position sensor coupler. Check the locking condition of the coupler. Disconnect the coupler and check the pins (bent or broken terminals and locking condition of the pins).	Improperly connected → Connect the coupler securely or replace the wire harness.	Crank the engine. Fault code number is not displayed → Service is finished. Fault code number is displayed → Go to item 2.
2	Connection of ECU coupler. Check the locking condition of the coupler. Disconnect the coupler and check the pins (bent or broken terminals and locking condition of the pins).	Improperly connected → Connect the coupler securely or replace the wire harness.	Crank the engine. Fault code number is not displayed → Service is finished. Fault code number is displayed → Go to item 3.
3	Wire harness continuity.	Open or short circuit → Replace the wire harness. Between crankshaft position sensor coupler and ECU coupler. gray–gray Between crankshaft position sensor coupler and joint coupler. black/blue–black/blue Between joint coupler and ECU coupler. black/blue–black/blue	Crank the engine. Fault code number is not displayed → Service is finished. Fault code number is displayed → Go to item 4.

Fault code No.		**12**	
Item		**Crankshaft position sensor: no normal signals are received from the crankshaft position sensor.**	
4	Installed condition of crankshaft position sensor. Check for looseness or pinching.	Improperly installed sensor → Reinstall or replace the sensor.	Crank the engine. Fault code number is not displayed → Service is finished. Fault code number is displayed → Go to item 5.
5	Defective crankshaft position sensor.	Check the crankshaft position sensor. Refer to "CHECKING THE CRANKSHAFT POSITION SENSOR" on page 8-72. Replace if defective.	Crank the engine. Fault code number is not displayed → Service is finished. Fault code number is displayed → Go to item 6.
6	Malfunction in ECU.	Replace the ECU.	

Fault code No.		**13**	
Item		**Intake air pressure sensor: open or short circuit detected.**	
Fail-safe system		Able to start engine	
		Able to drive vehicle	
Diagnostic code No.		03	
Indicated		Displays the intake air pressure.	
Procedure		Push the start switch and check that the intake air pressure changes.	
Item	**Probable cause of malfunction and check**	**Maintenance job**	**Confirmation of service completion**
1	Connection of intake air pressure sensor coupler. Check the locking condition of the coupler. Disconnect the coupler and check the pins (bent or broken terminals and locking condition of the pins).	Improperly connected → Connect the coupler securely or replace the wire harness.	Turn the main switch to " ▯ " (on). Fault code number is not displayed → Service is finished. Fault code number is displayed → Go to item 2.
2	Connection of ECU coupler. Check the locking condition of the coupler. Disconnect the coupler and check the pins (bent or broken terminals and locking condition of the pins).	Improperly connected → Connect the coupler securely or replace the wire harness.	Turn the main switch to " ▯ " (on). Fault code number is not displayed → Service is finished. Fault code number is displayed → Go to item 3.

Fault code No.		**13**	
Item		**Intake air pressure sensor: open or short circuit detected.**	
3	Wire harness continuity.	Open or short circuit → Replace the wire harness. Between intake air pressure sensor coupler and joint coupler. black/blue–black/blue blue–blue Between intake air pressure sensor coupler and ECU coupler. pink/blue–pink/blue Between joint coupler and ECU coupler. blue–blue black/blue–black/blue	Turn the main switch to “ ▯ ” (on). Fault code number is not displayed → Service is finished. Fault code number is displayed → Go to item 4.
4	Installed condition of intake air pressure sensor. Check for looseness or pinching.	Improperly installed sensor → Reinstall or replace the sensor.	Turn the main switch to “ ▯ ” (on). Fault code number is not displayed → Service is finished. Fault code number is displayed → Go to item 5.
5	Defective intake air pressure sensor.	Execute the diagnostic mode. (Code No. 03) When engine is stopped: Atmospheric pressure at the current altitude and weather conditions is indicated. At sea level: Approx. 101 kPa (757.6 mmHg, 29.8 inHg) 1000 m (3300 ft) above sea level: Approx. 90 kPa (675.1 mmHg, 26.6 inHg) 2000 m (6700 ft) above sea level: Approx. 80 kPa (600.0 mmHg, 23.6 inHg) 3000 m (9800 ft) above sea level: Approx. 70 kPa (525.0 mmHg, 20.7 inHg) When engine is cranking: Make sure that the indication value changes. The value does not change when engine is cranking. → Check the intake air pressure sensor. Replace if defective. Refer to “CHECKING THE INTAKE AIR PRESSURE SENSOR” on page 8-77.	Turn the main switch to “ ▯ ” (on). Fault code number is not displayed → Service is finished. Fault code number is displayed → Go to item 6.
6	Malfunction in ECU.	Replace the ECU.	

TIP

If fault code numbers “13” and “14” are both indicated, take the actions specified for fault code number “13” first.

Fault code No.	**14**
Item	**Intake air pressure sensor: hose system malfunction (clogged or detached hose).**
Fail-safe system	Able to start engine
	Able to drive vehicle
Diagnostic code No.	03
Indicated	Displays the intake air pressure.
Procedure	Push the start switch and check that the intake air pressure changes.

Item	Probable cause of malfunction and check	Maintenance job	Confirmation of service completion
1	Condition of intake air pressure sensor hose. Check the intake air pressure sensor hose condition.	Clogged or detached hose → Repair or replace the sensor hose.	Start the engine and let it idle for approximately 5 seconds. Fault code number is not displayed → Service is finished. Fault code number is displayed → Go to item 2.
2	Defective intake air pressure sensor.	Execute the diagnostic mode. (Code No. 03) When engine is stopped: Atmospheric pressure at the current altitude and weather conditions is indicated. At sea level: Approx. 101 kPa (757.6 mmHg, 29.8 inHg) 1000 m (3300 ft) above sea level: Approx. 90 kPa (675.1 mmHg, 26.6 inHg) 2000 m (6700 ft) above sea level: Approx. 80 kPa (600.0 mmHg, 23.6 inHg) 3000 m (9800 ft) above sea level: Approx. 70 kPa (525.0 mmHg, 20.7 inHg) When engine is cranking: Make sure that the indication value changes. The value does not change when engine is cranking. → Check the intake air pressure sensor. Replace if defective. Refer to “CHECKING THE INTAKE AIR PRESSURE SENSOR” on page 8-77.	

TIP

If fault code numbers “13” and “14” are both indicated, take the actions specified for fault code number “13” first.

Fault code No.	**15**
Item	**Throttle position sensor: open or short circuit detected.**
Fail-safe system	Able to start engine
	Able to drive vehicle
Diagnostic code No.	01
Indicated	Throttle position sensor signal • 14–20 (fully closed position)
Procedure	Check with throttle valve fully closed.

Item	Probable cause of malfunction and check	Maintenance job	Confirmation of service completion
1	Connection of throttle position sensor coupler. Check the locking condition of the coupler. Disconnect the coupler and check the pins (bent or broken terminals and locking condition of the pins).	Improperly connected → Connect the coupler securely or replace the wire harness.	Turn the main switch to “ ▯ ” (on). Fault code number is not displayed → Service is finished. Fault code number is displayed → Go to item 2.
2	Connection of ECU coupler. Check the locking condition of the coupler. Disconnect the coupler and check the pins (bent or broken terminals and locking condition of the pins).	Improperly connected → Connect the coupler securely or replace the wire harness.	Turn the main switch to “ ▯ ” (on). Fault code number is not displayed → Service is finished. Fault code number is displayed → Go to item 3.
3	Wire harness continuity.	Open or short circuit → Replace the wire harness. Between throttle position sensor coupler and joint coupler. black/blue–black/blue blue–blue Between throttle position sensor coupler and ECU coupler. yellow–yellow Between joint coupler and ECU coupler. blue–blue black/blue–black/blue	Turn the main switch to “ ▯ ” (on). Fault code number is not displayed → Service is finished. Fault code number is displayed → Go to item 4.
4	Installed condition of throttle position sensor. Check for looseness or pinching.	Improperly installed sensor → Reinstall or adjust the sensor. Refer to “ADJUSTING THE THROTTLE POSITION SENSOR” on page 7-7.	Turn the main switch to “ ▯ ” (on). Fault code number is not displayed → Service is finished. Fault code number is displayed → Go to item 5.

Fault code No.		15	
Item		**Throttle position sensor: open or short circuit detected.**	
5	Throttle position sensor resistance.	Measure the throttle position sensor resistance. Refer to "CHECKING THE THROTTLE POSITION SENSOR" on page 8-76.	Turn the main switch to " ▯ " (on). Fault code number is not displayed → Service is finished. Fault code number is displayed → Go to item 6.
6	Defective throttle position sensor.	Check throttle position sensor signal. Execute the diagnostic mode. (Code No. 01) When the throttle valve is fully closed: A value of 14–20 is indicated. An indicated value is out of the specified range → Replace the throttle position sensor.	Turn the main switch to " ▯ " (on). Fault code number is not displayed → Service is finished. Fault code number is displayed → Go to item 7.
7	Malfunction in ECU.	Replace the ECU.	

TIP

If fault code numbers "15" and "16" are both indicated, take the actions specified for fault code number "15" first.

Fault code No.		16	
Item		**Throttle position sensor: stuck throttle position sensor is detected.**	
Fail-safe system		Able to start engine	
		Able to drive vehicle	
Diagnostic code No.		01	
Indicated		Throttle position sensor signal • 14–20 (fully closed position)	
Procedure		Check with throttle valve fully closed.	
Item	**Probable cause of malfunction and check**	**Maintenance job**	**Confirmation of service completion**
1	Installed condition of throttle position sensor. Check for looseness or pinching.	Improperly installed sensor → Reinstall or adjust the sensor. Refer to "ADJUSTING THE THROTTLE POSITION SENSOR" on page 7-7.	Turn the main switch to " ▯ " (on), then operate the throttle. Fault code number is not displayed → Service is finished. Fault code number is displayed → Go to item 2.

Fault code No.		16	
Item		Throttle position sensor: stuck throttle position sensor is detected.	
2	Defective throttle position sensor.	Check throttle position sensor signal. Execute the diagnostic mode. (Code No. 01) When the throttle valve is fully closed: A value of 14–20 is indicated. An indicated value is out of the specified range → Replace the throttle position sensor.	Turn the main switch to “ ▯ ” (on), then operate the throttle. Fault code number is not displayed → Service is finished. Fault code number is displayed → Go to item 3.
3	Malfunction in ECU.	Replace the ECU.	

TIP

If fault code numbers “15” and “16” are both indicated, take the actions specified for fault code number “15” first.

Fault code No.		21	
Item		Coolant temperature sensor: open or short circuit detected.	
Fail-safe system		Able to start engine	
		Able to drive vehicle	
Diagnostic code No.		06	
Indicated		Displays the coolant temperature.	
Procedure		Check the coolant temperature.	
Item	**Probable cause of malfunction and check**	**Maintenance job**	**Confirmation of service completion**
1	Connection of coolant temperature sensor coupler. Check the locking condition of the coupler. Disconnect the coupler and check the pins (bent or broken terminals and locking condition of the pins).	Improperly connected → Connect the coupler securely or replace the wire harness.	Turn the main switch to “ ▯ ” (on). Fault code number is not displayed → Service is finished. Fault code number is displayed → Go to item 2.
2	Connection of ECU coupler. Check the locking condition of the coupler. Disconnect the coupler and check the pins (bent or broken terminals and locking condition of the pins).	Improperly connected → Connect the coupler securely or replace the wire harness.	Turn the main switch to “ ▯ ” (on). Fault code number is not displayed → Service is finished. Fault code number is displayed → Go to item 3.

Fault code No.		21	
Item		**Coolant temperature sensor: open or short circuit detected.**	
3	Wire harness continuity.	Open or short circuit → Replace the wire harness. Between coolant temperature sensor coupler and joint coupler. black/blue–black/blue Between coolant temperature sensor coupler and ECU coupler. black/yellow–black/yellow Between joint coupler and ECU coupler. black/blue–black/blue	Turn the main switch to " ▯ " (on). Fault code number is not displayed → Service is finished. Fault code number is displayed → Go to item 4.
4	Installed condition of coolant temperature sensor. Check for looseness or pinching.	Improperly installed sensor → Reinstall or replace the sensor.	Turn the main switch to " ▯ " (on). Fault code number is not displayed → Service is finished. Fault code number is displayed → Go to item 5.
5	Defective coolant temperature sensor.	Execute the diagnostic mode. (Code No. 06) When engine is cold: Displayed temperature is close to the ambient temperature. The displayed temperature is not close to the ambient temperature → Check the coolant temperature sensor. Replace if defective. Refer to "CHECKING THE COOLANT TEMPERATURE SENSOR" on page 8-75.	Turn the main switch to " ▯ " (on). Fault code number is not displayed → Service is finished. Fault code number is displayed → Go to item 6.
6	Malfunction in ECU.	Replace the ECU.	

Fault code No.		22	
Item		**Intake air temperature sensor: open or short circuit detected.**	
Fail-safe system		Able to start engine	
		Able to drive vehicle	
Diagnostic code No.		05	
Indicated		Displays the intake air temperature.	
Procedure		Check the temperature in the intake manifold and air filter case.	
Item	**Probable cause of malfunction and check**	**Maintenance job**	**Confirmation of service completion**

Fault code No.		22	
Item		**Intake air temperature sensor: open or short circuit detected.**	
1	Connection of intake air temperature sensor coupler. Check the locking condition of the coupler. Disconnect the coupler and check the pins (bent or broken terminals and locking condition of the pins).	Improperly connected → Connect the coupler securely or replace the wire harness.	Turn the main switch to “ ▯ ” (on). Fault code number is not displayed → Service is finished. Fault code number is displayed → Go to item 2.
2	Connection of ECU coupler. Check the locking condition of the coupler. Disconnect the coupler and check the pins (bent or broken terminals and locking condition of the pins).	Improperly connected → Connect the coupler securely or replace the wire harness.	Turn the main switch to “ ▯ ” (on). Fault code number is not displayed → Service is finished. Fault code number is displayed → Go to item 3.
3	Wire harness continuity.	Open or short circuit → Replace the wire harness. Between intake air temperature sensor coupler and joint coupler. black/blue–black/blue Between intake air temperature sensor coupler and ECU coupler. brown/white–brown/white Between joint coupler and ECU coupler. black/blue–black/blue	Turn the main switch to “ ▯ ” (on). Fault code number is not displayed → Service is finished. Fault code number is displayed → Go to item 4.
4	Installed condition of intake air temperature sensor. Check for looseness or pinching.	Improperly installed sensor → Reinstall or replace the sensor.	Turn the main switch to “ ▯ ” (on). Fault code number is not displayed → Service is finished. Fault code number is displayed → Go to item 5.
5	Defective intake air temperature sensor.	Execute the diagnostic mode. (Code No. 05) When engine is cold: Displayed temperature is close to the ambient temperature. The displayed temperature is not close to the ambient temperature. → Check the intake air temperature sensor. Replace if defective. Refer to “CHECKING THE INTAKE AIR TEMPERATURE SENSOR” on page 8-77.	Turn the main switch to “ ▯ ” (on). Fault code number is not displayed → Service is finished. Fault code number is displayed → Go to item 6.
6	Malfunction in ECU.	Replace the ECU.	

Fault code No.	**30**
Item	**Latch up detected.**
Fail-safe system	Unable to start engine
	Unable to drive vehicle
Diagnostic code No.	08
Indicated	Lean angle sensor output voltage • 0.4–1.4 (upright) • 3.7–4.4 (overturned)
Procedure	Remove the lean angle sensor and incline it more than 65 degrees.

Item	Probable cause of malfunction and check	Maintenance job	Confirmation of service completion
1	The vehicle has overturned.	Raise the vehicle upright.	Turn the main switch to " ▯ " (on), then to " ◎ " (off), and then back to " ▯ " (on). Fault code number is not displayed → Service is finished. Fault code number is displayed → Go to item 2.
2	Installed condition of lean angle sensor.	Check the installed direction and condition of the sensor.	Turn the main switch to " ▯ " (on), then to " ◎ " (off), and then back to " ▯ " (on). Fault code number is not displayed → Service is finished. Fault code number is displayed → Go to item 3.
3	Defective lean angle sensor.	Execute the diagnostic mode. (Code No. 08) An indicated value is out of the specified range → Check the lean angle sensor. Replace if defective. Refer to "CHECKING THE LEAN ANGLE SENSOR" on page 8-72.	Turn the main switch to " ▯ " (on) then to " ◎ " (off), and then back to " ▯ " (on). Fault code number is not displayed → Service is finished. Fault code number is displayed → Go to item 4.
4	Malfunction in ECU.	Replace the ECU.	

Fault code No.	**33**
Item	**Ignition coil: malfunction detected in the primary lead of the ignition coil.**
Fail-safe system	Unable to start engine
	Unable to drive vehicle
Diagnostic code No.	30
Actuation	Actuates the ignition coil five times at one-second intervals. The "CHECK" indicator and " " on the Yamaha diagnostic tool screen come on each time the ignition coil is actuated.
Procedure	Check that power is supplied to the ingnition coil. • Check that a spark is generated.

Fault code No.	33		
Item	Ignition coil: malfunction detected in the primary lead of the ignition coil.		
Item	**Probable cause of malfunction and check**	**Maintenance job**	**Confirmation of service completion**
1	Connection of ignition coil connector. Check the locking condition of the connector. Disconnect the connector and check the pins (bent or broken terminals and locking condition of the pins).	Improperly connected → Connect the connector securely or replace the wire harness.	Start the engine and let it idle for approximately 5 seconds. Fault code number is not displayed → Service is finished. Fault code number is displayed → Go to item 2.
2	Connection of ECU coupler. Check the locking condition of the coupler. Disconnect the coupler and check the pins (bent or broken terminals and locking condition of the pins).	Improperly connected → Connect the coupler securely or replace the wire harness.	Start the engine and let it idle for approximately 5 seconds. Fault code number is not displayed → Service is finished. Fault code number is displayed → Go to item 3.
3	Wire harness continuity.	Open or short circuit → Replace the wire harness. Between ignition coil connector and ECU coupler. orange–orange	Start the engine and let it idle for approximately 5 seconds. Fault code number is not displayed → Service is finished. Fault code number is displayed → Go to item 4.
4	Installed condition of ignition coil. Check for looseness or pinching.	Improperly installed ignition coil → Reinstall or replace the ignition coil.	Start the engine and let it idle for approximately 5 seconds. Fault code number is not displayed → Service is finished. Fault code number is displayed → Go to item 5.
5	Defective ignition coil.	Measure the primary coil resistance of the ignition coil. Replace if out of specification. Refer to “CHECKING THE IGNITION COIL” on page 8-70.	Start the engine and let it idle for approximately 5 seconds. Fault code number is not displayed → Service is finished. Fault code number is displayed → Go to item 6.
6	Malfunction in ECU.	Execute the diagnostic mode. (Code No. 30) No spark → Replace the ECU.	

Fault code No.	39
Item	Injector: open or short circuit detected.
Fail-safe system	Unable to start engine
	Unable to drive vehicle
Diagnostic code No.	36

Fault code No.	**39**
Item	**Injector: open or short circuit detected.**
Actuation	Actuates injector five times at one-second intervals. The “CHECK” indicator and “ ” on the Yamaha diagnostic tool screen come on each time the fuel injector is actuated.
Procedure	Check that power is supplied to the injector. Check the injector operation by listening for the operating sound or by confirming the operation visually.

Item	Probable cause of malfunction and check	Maintenance job	Confirmation of service completion
1	Connection of injector coupler. Check the locking condition of the coupler. Disconnect the coupler and check the pins (bent or broken terminals and locking condition of the pins).	Improperly connected → Connect the coupler securely or replace the wire harness.	Execute the diagnostic mode. (Code No. 36) Operating sound → Go to item 6. No operating sound → Go to item 2.
2	Defective injector.	Measure the injector resistance. Replace if out of specification.	Execute the diagnostic mode. (Code No. 36) Operating sound → Go to item 6. No operating sound → Go to item 3.
3	Connection of ECU coupler. Check the locking condition of the coupler. Disconnect the coupler and check the pins (bent or broken terminals and locking condition of the pins).	Improperly connected → Connect the coupler securely or replace the wire harness.	Execute the diagnostic mode. (Code No. 36) Operating sound → Go to item 6. No operating sound → Go to item 4.
4	Wire harness continuity.	Open or short circuit → Replace the wire harness. Between injector coupler and fuel pump relay coupler. red/blue–red/blue Between injector coupler and ECU coupler. red/black–red/black	Execute the diagnostic mode. (Code No. 36) Operating sound → Go to item 6. No operating sound → Go to item 5.
5	Malfunction in ECU.	Replace the ECU.	
6	Delete the fault code.		Start the engine and let it idle for approximately 5 seconds. Check that the fault code number is not displayed.

Fault code No.	**41**
Item	**Lean angle sensor: open or short circuit detected.**
Fail-safe system	Unable to start engine
	Unable to drive vehicle
Diagnostic code No.	08

Fault code No.	**41**
Item	**Lean angle sensor: open or short circuit detected.**
Indicated	Lean angle sensor output voltage • 0.4–1.4 (upright) • 3.7–4.4 (overturned)
Procedure	Remove the lean angle sensor and incline it more than 65 degrees.

Item	Probable cause of malfunction and check	Maintenance job	Confirmation of service completion
1	Connection of lean angle sensor coupler. Check the locking condition of the coupler. Disconnect the coupler and check the pins (bent or broken terminals and locking condition of the pins).	Improperly connected → Connect the coupler securely or replace the wire harness.	Turn the main switch to " ▯ " (on), then to " ◎ " (off), and then back to " ▯ " (on). Fault code number is not displayed → Service is finished. Fault code number is displayed → Go to item 2.
2	Connection of ECU coupler. Check the locking condition of the coupler. Disconnect the coupler and check the pins (bent or broken terminals and locking condition of the pins).	Improperly connected → Connect the coupler securely or replace the wire harness.	Turn the main switch to " ▯ " (on), then to " ◎ " (off), and then back to " ▯ " (on). Fault code number is not displayed → Service is finished. Fault code number is displayed → Go to item 3.
3	Wire harness continuity.	Open or short circuit → Replace the wire harness. Between lean angle sensor coupler and ECU coupler. yellow/green–yellow/green Between lean angle sensor coupler and joint coupler. blue–blue black/blue–black/blue Between joint coupler and ECU coupler. blue–blue black/blue–black/blue	Turn the main switch to " ▯ " (on), then to " ◎ " (off), and then back to " ▯ " (on). Fault code number is not displayed → Service is finished. Fault code number is displayed → Go to item 4.
4	Defective lean angle sensor.	Execute the diagnostic mode. (Code No. 08) An indicated value is out of the specified range → Check the lean angle sensor. Replace if defective. Refer to "CHECKING THE LEAN ANGLE SENSOR" on page 8-72.	Turn the main switch to " ▯ " (on), then to " ◎ " (off), and then back to " ▯ " (on). Fault code number is not displayed → Service is finished. Fault code number is displayed → Go to item 5.
5	Malfunction in ECU.	Replace the ECU.	

Fault code No.	**42**
Item	**Speed sensor: no normal signals are received from the speed sensor.**
Fail-safe system	Able to start engine
	Able to drive vehicle
Diagnostic code No.	07
Indicated	Vehicle speed pulse 0–999
Procedure	Check that the number increases when the rear wheels are rotated. The number is cumulative and does not reset each time the wheel is stopped.

Item	Probable cause of malfunction and check	Maintenance job	Confirmation of service completion
1	Connection of speed sensor coupler. Check the locking condition of the coupler. Disconnect the coupler and check the pins (bent or broken terminals and locking condition of the pins).	Improperly connected → Connect the coupler securely or replace the wire harness.	Turn the main switch to “ ▯ ” (on), and then rotate the rear wheel by hand. Fault code number is not displayed → Go to item 6. Fault code number is displayed → Go to item 2.
2	Connection of ECU coupler. Check the locking condition of the coupler. Disconnect the coupler and check the pins (bent or broken terminals and locking condition of the pins).	Improperly connected → Connect the coupler securely or replace the wire harness.	Turn the main switch to “ ▯ ” (on), and then rotate the rear wheel by hand. Fault code number is not displayed → Go to item 6. Fault code number is displayed → Go to item 3.
3	Wire harness continuity.	Open or short circuit → Replace the wire harness. Between speed sensor coupler and ECU coupler. white–white Between speed sensor coupler and joint coupler. blue–blue black/blue–black/blue Between joint coupler and ECU coupler. blue–blue black/blue–black/blue	Turn the main switch to “ ▯ ” (on), and then rotate the rear wheel by hand. Fault code number is not displayed → Go to item 6. Fault code number is displayed → Go to item 4.
4	Defective speed sensor.	Execute the diagnostic mode. (Code No. 07) While the rear wheels and stopped, check that the indicated value does not change. Rotate the rear wheel by hand and check that the indicated value increases. Malfunction → Replace the speed sensor.	Turn the main switch to “ ▯ ” (on), and then rotate the rear wheel by hand. Fault code number is not displayed → Go to item 6. Fault code number is displayed → Go to item 5.

Fault code No.		42	
Item		**Speed sensor: no normal signals are received from the speed sensor.**	
5	Malfunction in ECU.	Replace the ECU.	
6	Delete the fault code.		Start the engine, and input the vehicle speed signals by operating the vehicle at 20 to 30 km/h (12 to 19 mph). Check that the fault code number is not displayed.

Fault code No.		43
Item		**Fuel system voltage: incorrect voltage supplied to the fuel injector and fuel pump.**
Fail-safe system		Able to start engine
		Able to drive vehicle
Diagnostic code No.		09, 50
09	**Indicated**	Fuel system voltage (battery voltage) Approximately 12.0
	Procedure	Turn the main switch to “ ▯ ” (on), and then compare the actually measured battery voltage with the display value. (If the actually measured battery voltage is low, recharge the battery.)
50	**Actuation**	Actuates the fuel pump relay five times at one-second intervals. The “CHECK” indicator and “ ” on the Yamaha diagnostic tool screen come on each time the relay is actuated. (When the relay is on, the “CHECK” indicator and “ ” on the Yamaha diagnostic tool screen go off. When the relay is off, the “CHECK” indicator and “ ” on the Yamaha diagnostic tool screen come on.)
	Procedure	Check that the fuel pump relay is actuated five times by listening for the operating sound.

Item	Probable cause of malfunction and check	Maintenance job	Confirmation of service completion
1	Connection of fuel pump relay coupler. Check the locking condition of the coupler. Disconnect the coupler and check the pins (bent or broken terminals and locking condition of the pins).	Improperly connected → Connect the coupler securely or replace the wire harness.	Start the engine and let it idle for approximately 5 seconds. Fault code number is not displayed → Service is finished. Fault code number is displayed → Go to item 2.
2	Connection of ECU coupler. Check the locking condition of the coupler. Disconnect the coupler and check the pins (bent or broken terminals and locking condition of the pins).	Improperly connected → Connect the coupler securely or replace the wire harness.	Start the engine and let it idle for approximately 5 seconds. Fault code number is not displayed → Service is finished. Fault code number is displayed → Go to item 3.

Fault code No.		43	
Item		**Fuel system voltage: incorrect voltage supplied to the fuel injector and fuel pump.**	
3	Wire harness continuity.	Open or short circuit → Replace the wire harness. Between fuel pump relay coupler and ECU coupler. red/blue–red/blue Between fuel pump relay coupler and fuel injection system fuse. brown/green–brown/green	Start the engine and let it idle for approximately 5 seconds. Fault code number is not displayed → Service is finished. Fault code number is displayed → Go to item 4.
4	Defective fuel pump relay.	Execute the diagnostic mode. (Code No. 50) No operating sound → Replace the fuel pump relay.	Start the engine and let it idle for approximately 5 seconds. Fault code number is not displayed → Service is finished. Fault code number is displayed → Go to item 5.
5	Defective fuel pump relay.	Execute the diagnostic mode. (Code No. 09) Fuel system voltage is below 3 V → Replace the fuel pump relay.	Start the engine and let it idle for approximately 5 seconds. Fault code number is not displayed → Service is finished. Fault code number is displayed → Go to item 6.
6	Malfunction in ECU.	Replace the ECU.	

Fault code No.		44	
Item		**EEPROM fault code number: an error is detected while reading or writing on EEPROM.**	
Fail-safe system		Able to start engine	
		Able to drive vehicle	
Diagnostic code No.		60	
Indicated		The fault code No. 44 detected EEPROM errors are indicated.	
Procedure		—	
Item	**Probable cause of malfunction and check**	**Maintenance job**	**Confirmation of service completion**
1	Locate the malfunction.	Execute the diagnostic mode. (Code No. 60)	—
2	Malfunction in ECU.	Replace the ECU.	

Fault code No.	46
Item	**Charging voltage is abnormal.**
Fail-safe system	Able to start engine
	Able to drive vehicle
Diagnostic code No.	—
Indicated	—
Procedure	—

Fault code No.	46		
Item	Charging voltage is abnormal.		
Item	**Probable cause of malfunction and check**	**Maintenance job**	**Confirmation of service completion**
1	Malfunction in charging system.	Check the charging system. Refer to “CHARGING SYSTEM” on page 8-11. Defective rectifier/regulator or AC magneto → Replace. Defective connection in the charging system circuit → Properly connect or replace the wire harness.	Start the engine and let it idle for approximately 5 seconds. Fault code number is not displayed → Service is finished. Fault code number is displayed → Repeat the maintenance job.

Fault code No.	50		
Item	Faulty ECU (engine control unit) memory. (When this malfunction is detected in the ECU, the fault code number might not appear.)		
Fail-safe system	Unable to start engine		
	Unable to drive vehicle		
Diagnostic code No.	—		
Indicated	—		
Procedure	—		
Item	**Probable cause of malfunction and check**	**Maintenance job**	**Confirmation of service completion**
1	Malfunction in ECU.	Replace the ECU.	Turn the main switch to “ ▯ ” (on). Check that the fault code number is not displayed.

EAS27550

FUEL PUMP SYSTEM

EAS27560

CIRCUIT DIAGRAM

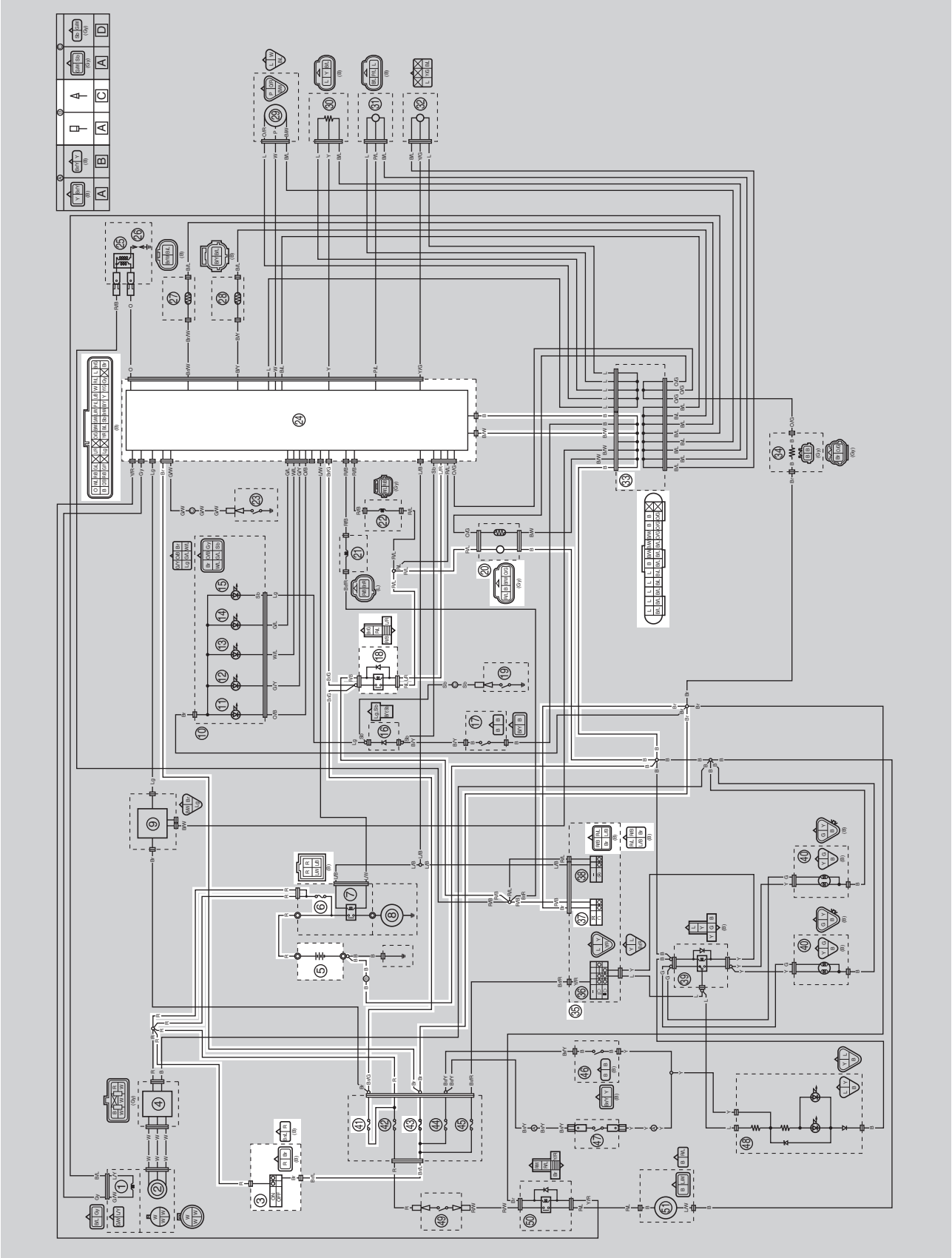

3. Main switch
5. Battery
6. Main fuse
18. Fuel pump relay
20. Fuel pump
24. ECU (engine control unit)
33. Joint coupler
35. Handlebar switch
37. Engine stop switch
41. Fuel injection system fuse
43. Ignition fuse
A. Wire harness
C. Negative battery sub-wire harness

EAS27570

TROUBLESHOOTING

If the fuel pump fails to operate.

TIP

- Before troubleshooting, remove the following part(s):

1. Seat
2. Fuel tank top panel

1. Check the fuses. (Main, ignition and fuel injection system) Refer to "CHECKING THE FUSES" on page 8-65.	NG →	Replace the fuse(s).
OK ↓		
2. Check the battery. Refer to "CHECKING AND CHARGING THE BATTERY" on page 8-66.	NG →	• Clean the battery terminals. • Recharge or replace the battery.
OK ↓		
3. Check the main switch. Refer to "CHECKING THE SWITCHES" on page 8-61.	NG →	Replace the main switch.
OK ↓		
4. Check the engine stop switch. Refer to "CHECKING THE SWITCHES" on page 8-61.	NG →	The engine stop switch is faulty. Replace the handlebar switch.
OK ↓		
5. Check the fuel pump relay. Refer to "CHECKING THE RELAYS" on page 8-69.	NG →	Replace the fuel pump relay.
OK ↓		
6. Check the fuel pump. Refer to "CHECKING THE FUEL PUMP BODY" on page 7-2.	NG →	Replace the fuel pump.
OK ↓		
7. Check the entire fuel pump system wiring. Refer to "CIRCUIT DIAGRAM" on page 8-55.	NG →	Properly connect or replace the wire harness.
OK ↓		
Replace the ECU.		

EAS27972

ELECTRICAL COMPONENTS

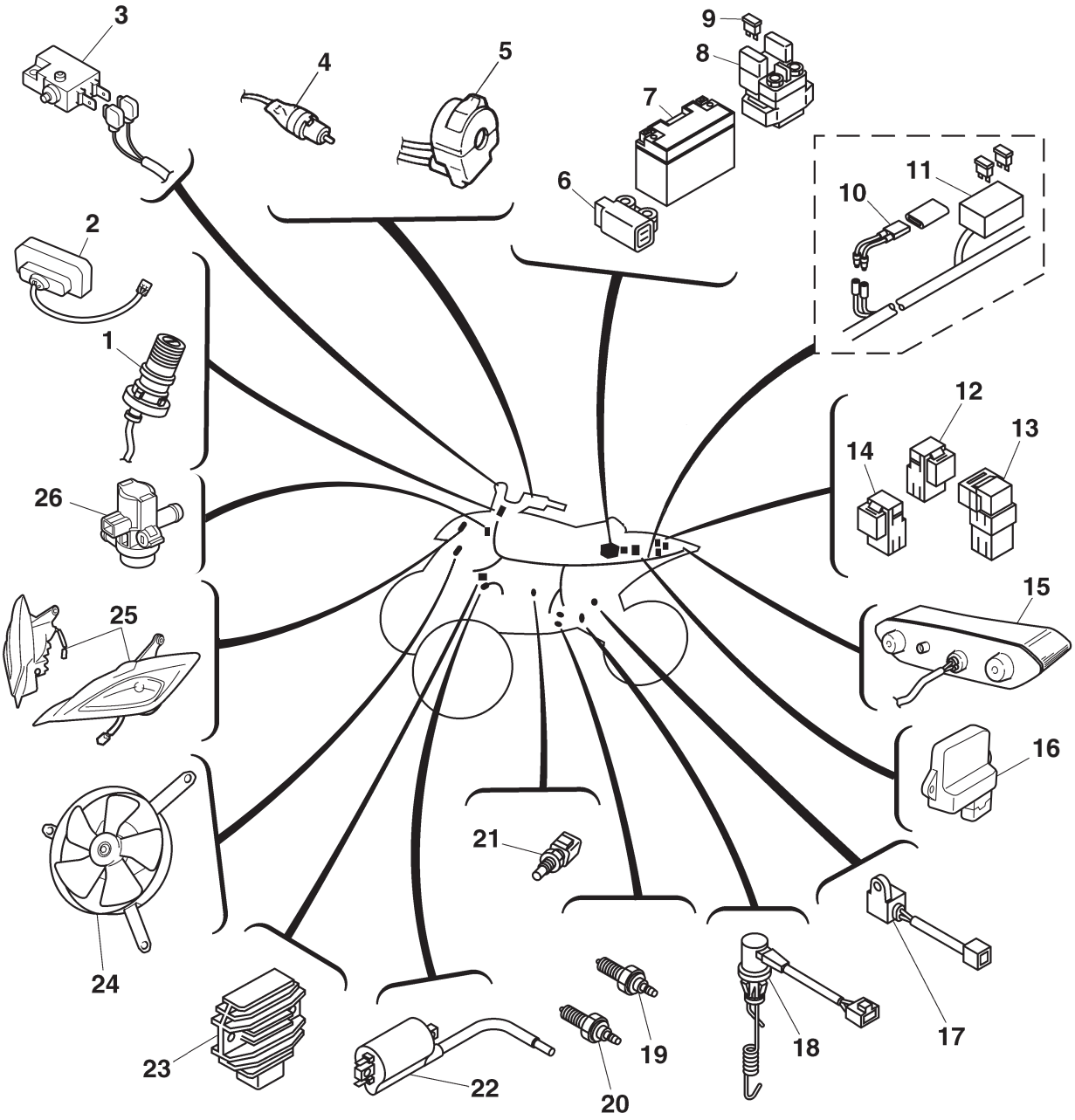

1. Main switch
2. Indicator light assembly
3. Front brake light switch
4. Clutch switch
5. Handlebar switch
6. Lean angle sensor
7. Battery
8. Starter relay
9. Main fuse
10. Circuit breaker (fan)
11. Fuse box
12. Radiator fan motor relay
13. Headlight relay
14. Fuel pump relay
15. Tail/brake light
16. ECU (engine control unit)
17. Speed sensor
18. Rear brake light switch
19. Neutral switch
20. Reverse switch
21. Coolant temperature sensor
22. Ignition coil
23. Rectifier/regulator
24. Radiator fan
25. Headlight
26. Air induction system solenoid

EAS27980

CHECKING THE SWITCHES

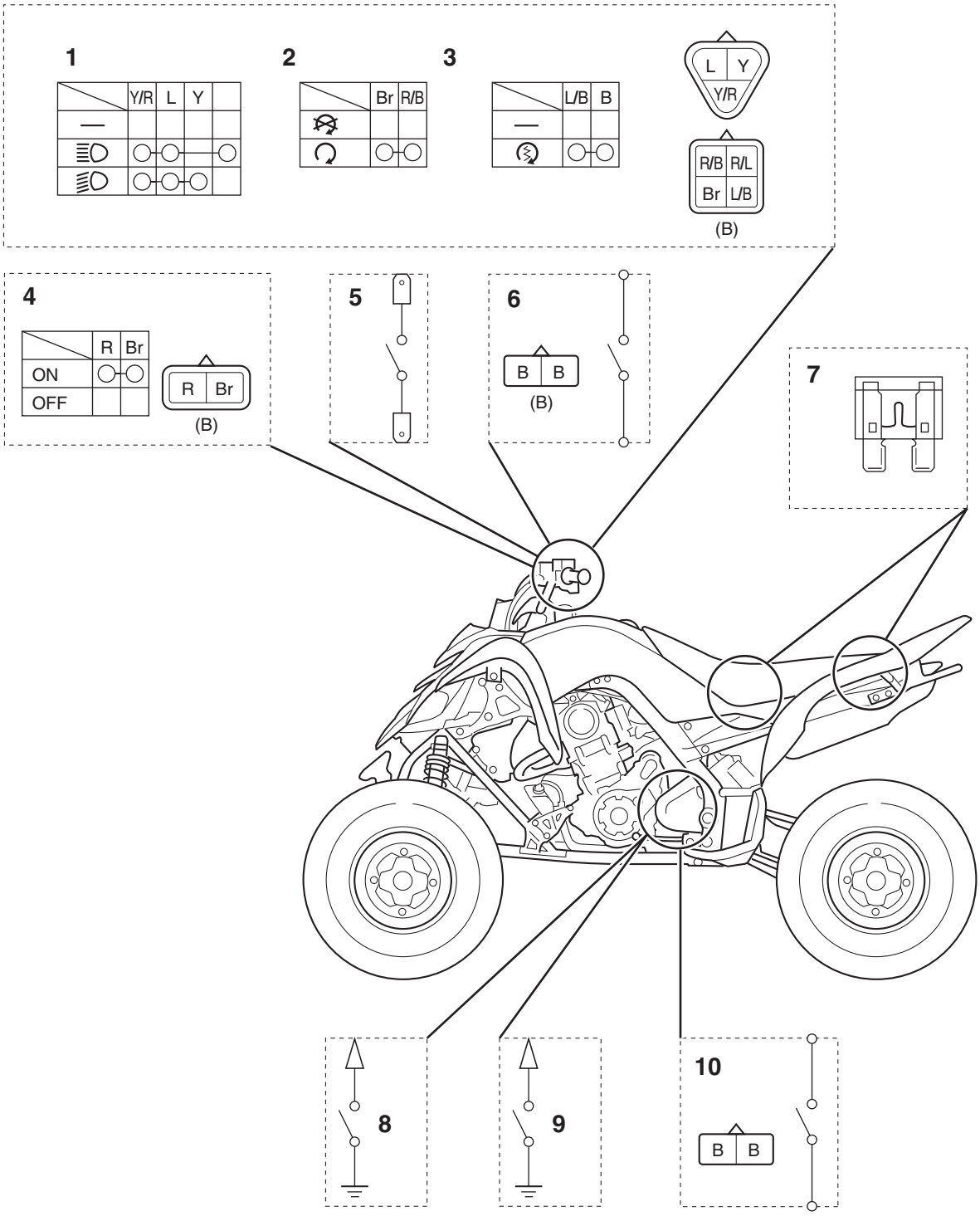

1. Light switch
2. Engine stop switch
3. Start switch
4. Main switch
5. Front brake light switch
6. Clutch switch
7. Fuse
8. Reverse switch
9. Neutral switch
10. Rear brake light switch

Check each switch for continuity with the pocket tester. If the continuity reading is incorrect, check the wiring connections and if necessary, replace the switch.

ECA14370

NOTICE

Never insert the tester probes into the coupler terminal slots "a". Always insert the probes from the opposite end of the coupler, taking care not to loosen or damage the leads.

Pocket tester
90890-03112
Analog pocket tester
YU-03112-C

TIP

- Before checking for continuity, set the pocket tester to "0" and to the "Ω × 1" range.
- When checking for continuity, switch back and forth between the switch positions a few times.

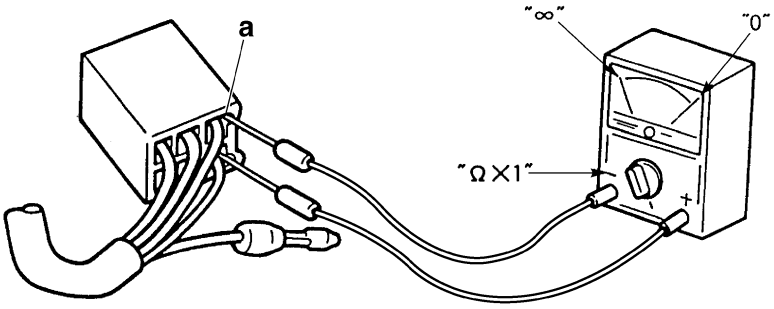

The switches and their terminal connections are illustrated as in the following example of the main switch.
The switch positions "a" are shown in the far left column and the switch lead colors "b" are shown in the top row.
The continuity (i. e., a closed circuit) between switch terminals at a given switch position is indicated by " ○——○ ". There is continuity between red and brown when the switch is set to "ON".

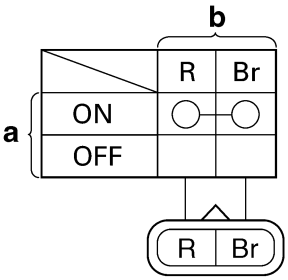

EAS27990

CHECKING THE BULBS AND BULB SOCKETS

TIP

Do not check any of the lights that use LEDs.

Check each bulb and bulb socket for damage or wear, proper connections, and also for continuity between the terminals.
Damage/wear → Repair or replace the bulb, bulb socket or both.
Improperly connected → Properly connect.
No continuity → Repair or replace the bulb, bulb socket or both.

Types of bulbs

The bulbs used on this vehicle are shown in the illustration.

- Bulbs “a” and “b” are used for the headlights and usually use a bulb holder that must be detached before removing the bulb. The majority of these types of bulbs can be removed from their respective sockets by turning them counterclockwise.

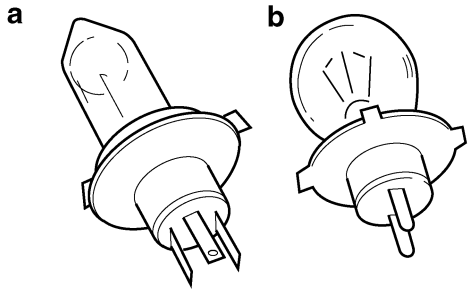

Checking the condition of the bulbs

The following procedure applies to all of the bulbs.

1. Remove:
   - Bulb

EWA1S3L014

WARNING

Since headlight bulbs get extremely hot, keep flammable products and your hands away from them until they have cooled down.

ECA1S3L020

NOTICE

- **Be sure to hold the socket firmly when removing the bulb. Never pull the lead, otherwise it may be pulled out of the terminal in the coupler.**
- **Avoid touching the glass part of a headlight bulb to keep it free from oil, otherwise the transparency of the glass, the life of the bulb, and the luminous flux will be adversely affected. If a headlight bulb gets soiled, thoroughly clean it with a cloth moistened with alcohol or lacquer thinner.**

2. Check:
   - Bulb (for continuity)
     (with the pocket tester)
     No continuity → Replace.

Pocket tester
90890-03112
Analog pocket tester
YU-03112-C

TIP

Before checking for continuity, set the pocket tester to “0” and to the “Ω × 1” range.

▼▼▼▼▼▼▼▼▼▼▼▼▼▼▼▼▼▼▼▼▼▼▼▼▼▼▼▼▼▼▼▼▼▼

a. Connect the positive tester probe to terminal “1” and the negative tester probe to terminal “2”, and check the continuity.
b. Connect the positive tester probe to terminal “1” and the negative tester probe to terminal “3”, and check the continuity.
c. If either of the readings indicate no continuity, replace the bulb.

▲▲▲▲▲▲▲▲▲▲▲▲▲▲▲▲▲▲▲▲▲▲▲▲▲▲▲▲▲▲▲▲▲▲

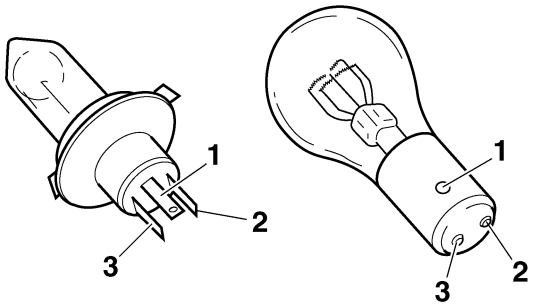

Checking the condition of the bulb sockets

The following procedure applies to all of the bulb sockets.

1. Check:
   - Bulb socket (for continuity)
     (with the pocket tester)
     No continuity → Replace.

Pocket tester
90890-03112
Analog pocket tester
YU-03112-C

TIP

Check each bulb socket for continuity in the same manner as described in the bulb section; however, note the following.

▼▼▼▼▼▼▼▼▼▼▼▼▼▼▼▼▼▼▼▼▼▼▼▼▼▼▼▼▼▼▼▼▼▼

a. Install a good bulb into the bulb socket.
b. Connect the pocket tester probes to the respective leads of the bulb socket.
c. Check the bulb socket for continuity. If any of the readings indicate no continuity, replace the bulb socket.

▲▲▲▲▲▲▲▲▲▲▲▲▲▲▲▲▲▲▲▲▲▲▲▲▲▲▲▲▲▲▲▲▲▲

EAS28000

CHECKING THE FUSES

The following procedure applies to all of the fuses.

ECA13680

NOTICE

To avoid a short circuit, always set the main switch to "OFF" when checking or replacing a fuse.

1. Remove:
   - Seat
     Refer to "GENERAL CHASSIS" on page 4-1.
2. Check:
   - Fuse

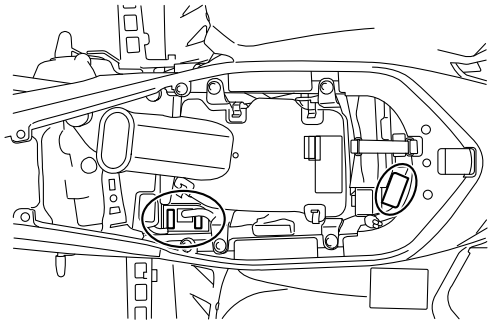

▼▼▼▼▼▼▼▼▼▼▼▼▼▼▼▼▼▼▼▼▼▼▼▼▼▼▼▼▼▼▼▼▼▼

a. Connect the pocket tester to the fuse and check the continuity.

TIP

Set the pocket tester selector to "Ω × 1".

Pocket tester
90890-03112
Analog pocket tester
YU-03112-C

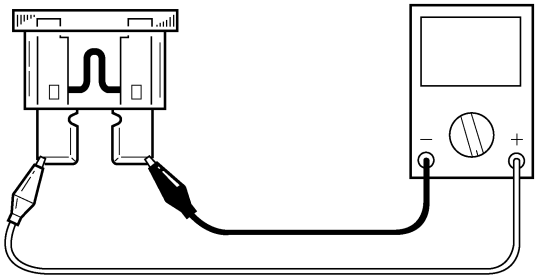

b. If the pocket tester indicates "∞", replace the fuse.

▲▲▲▲▲▲▲▲▲▲▲▲▲▲▲▲▲▲▲▲▲▲▲▲▲▲▲▲▲▲▲▲▲▲

3. Replace:
   - Blown fuse

▼▼▼▼▼▼▼▼▼▼▼▼▼▼▼▼▼▼▼▼▼▼▼▼▼▼▼▼▼▼▼▼▼▼

a. Set the main switch to "OFF".
b. Install a new fuse of the correct amperage rating.
c. Set the switches to on to verify if the corresponding electrical circuits are operational.
d. If the fuse immediately blows again, check the electrical circuit.

Fuses	Amperage rating	Q'ty
Main	30 A	1
Radiator fan motor	20 A	1
Headlight	10 A	1
Ignition	10 A	1
Fuel injection system	10 A	1
Signaling system	10 A	1
Spare	30 A	1
Spare	20 A	1
Spare	10 A	1

EWA13310

WARNING

Never use a fuse with an amperage rating other than that specified. Improvising or using a fuse with the wrong amperage rating may cause extensive damage to the electrical system, cause the lighting and ignition systems to malfunction and could possibly cause a fire.

▲▲▲▲▲▲▲▲▲▲▲▲▲▲▲▲▲▲▲▲▲▲▲▲▲▲▲▲▲▲▲▲▲▲

4. Install:
   - Seat
     Refer to "GENERAL CHASSIS" on page 4-1.

EAS28030

CHECKING AND CHARGING THE BATTERY

EWA13290

WARNING

Batteries generate explosive hydrogen gas and contain electrolyte which is made of poisonous and highly caustic sulfuric acid. Therefore, always follow these preventive measures:

- **Wear protective eye gear when handling or working near batteries.**
- **Charge batteries in a well-ventilated area.**
- **Keep batteries away from fire, sparks or open flames (e.g., welding equipment, lighted cigarettes).**
- **DO NOT SMOKE when charging or handling batteries.**
- **KEEP BATTERIES AND ELECTROLYTE OUT OF REACH OF CHILDREN.**
- **Avoid bodily contact with electrolyte as it can cause severe burns or permanent eye injury.**

FIRST AID IN CASE OF BODILY CONTACT:
EXTERNAL

- **Skin — Wash with water.**
- **Eyes — Flush with water for 15 minutes and get immediate medical attention.**

INTERNAL

- **Drink large quantities of water or milk followed with milk of magnesia, beaten egg or vegetable oil. Get immediate medical attention.**

ECA1S3L021

NOTICE

- **This is a VRLA (Valve Regulated Lead Acid) battery. Never remove the sealing caps because the balance between cells will not be maintained and battery performance will deteriorate.**
- **Charging time, charging amperage and charging voltage for a VRLA (Valve Regulated Lead Acid) battery are different from those of conventional batteries. The VRLA (Valve Regulated Lead Acid) battery should be charged as explained in the charging method section. If the battery is overcharged, the electrolyte level will drop considerably. Therefore, take special care when charging the battery.**

TIP

Since VRLA (Valve Regulated Lead Acid) batteries are sealed, it is not possible to check the charge state of the battery by measuring the specific gravity of the electrolyte. Therefore, the charge of the battery has to be checked by measuring the voltage at the battery terminals.

1. Remove:
   - Seat
   - Battery holding bracket
   Refer to “GENERAL CHASSIS” on page 4-1.
2. Disconnect:
   - Battery leads
   (from the battery terminals)

ECA13640

NOTICE

First, disconnect the negative battery lead “1”, and then positive battery lead “2”.

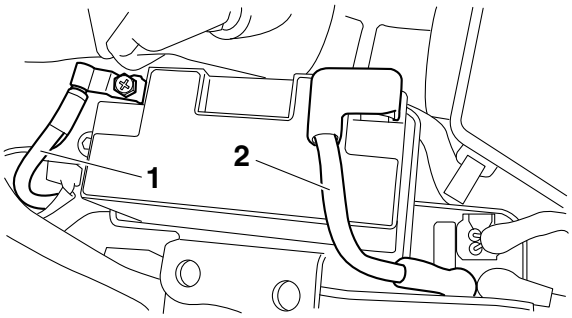

3. Remove:
   - Battery
4. Check:
   - Battery charge

▼▼▼▼▼▼▼▼▼▼▼▼▼▼▼▼▼▼▼▼▼▼▼▼▼▼▼▼▼▼▼▼▼▼

a. Connect a pocket tester to the battery terminals.

- Positive tester probe → positive battery terminal
- Negative tester probe → negative battery terminal

TIP

- The charge state of a VRLA (Valve Regulated Lead Acid) battery can be checked by measuring its open-circuit voltage (i.e., the voltage when the positive battery terminal is disconnected).
- No charging is necessary when the open-circuit voltage equals or exceeds 12.8 V.

b. Check the charge of the battery, as shown in the charts and the following example.

Example
Open-circuit voltage = 12.0 V
Charging time = 6.5 hours
Charge of the battery = 20–30%

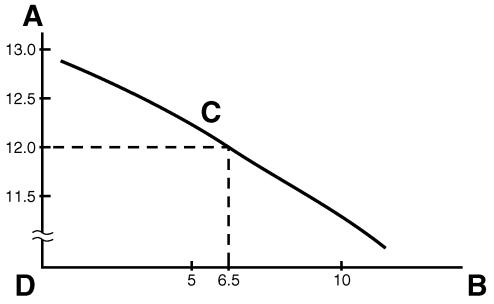

A. Open-circuit voltage (V)
B. Charging time (hours)
C. Relationship between the open-circuit voltage and the charging time at 20 °C (68 °F)
D. These values vary with the temperature, the condition of the battery plates, and the electrolyte level.

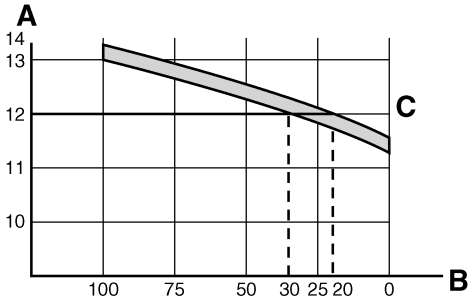

A. Open-circuit voltage (V)
B. Charging condition of the battery (%)
C. Ambient temperature 20 °C (68 °F)

▲▲▲▲▲▲▲▲▲▲▲▲▲▲▲▲▲▲▲▲▲▲▲▲▲▲▲▲▲▲▲▲▲▲

5. Charge:
   - Battery
     (refer to the appropriate charging method)

EWA13300

WARNING

Do not quick charge a battery.

ECA1S3L022

NOTICE

- **Do not use a high-rate battery charger since it forces a high-amperage current into the battery quickly and can cause battery overheating and battery plate damage.**
- **If it is impossible to regulate the charging current on the battery charger, be careful not to overcharge the battery.**
- **When charging a battery, be sure to remove it from the vehicle. (If charging has to be done with the battery mounted on the vehicle, disconnect the negative battery lead from the battery terminal.)**
- **To reduce the chance of sparks, do not plug in the battery charger until the battery charger leads are connected to the battery.**
- **Before removing the battery charger lead clips from the battery terminals, be sure to turn off the battery charger.**
- **Make sure the battery charger lead clips are in full contact with the battery terminal and that they are not shorted. A corroded battery charger lead clip may generate heat in the contact area and a weak clip spring may cause sparks.**
- **If the battery becomes hot to the touch at any time during the charging process, disconnect the battery charger and let the battery cool before reconnecting it. Hot batteries can explode!**
- **As shown in the following illustration, the open-circuit voltage of a VRLA (Valve Regulated Lead Acid) battery stabilizes about 30 minutes after charging has been completed. Therefore, wait 30 minutes after charging is completed before measuring the open-circuit voltage.**

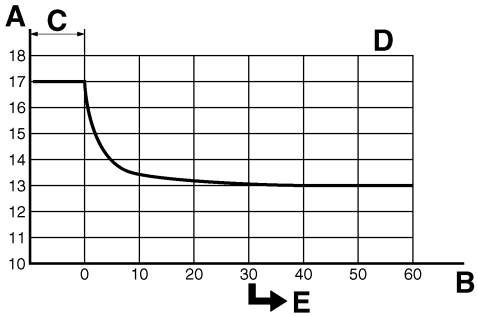

A. Open-circuit voltage (V)
B. Time (minutes)
C. Charging
D. Ambient temperature 20 °C (68 °F)
E. Check the open-circuit voltage.

▼▼▼▼▼▼▼▼▼▼▼▼▼▼▼▼▼▼▼▼▼▼▼▼▼▼▼▼▼▼▼▼▼▼

Charging method using a variable-current (voltage) charger

a. Measure the open-circuit voltage prior to charging.

TIP

Voltage should be measured 30 minutes after the engine is stopped.

b. Connect a charger and ammeter to the battery and start charging.

TIP

Set the charging voltage at 16–17 V. If the setting is lower, charging will be insufficient. If too high, the battery will be over-charged.

c. Make sure that the current is higher than the standard charging current written on the battery.

TIP

If the current is lower than the standard charging current written on the battery, set the charging voltage adjust dial at 20–24 V and monitor the amperage for 3–5 minutes to check the battery.

- Reaches the standard charging current → Battery is good.
- Does not reach the standard charging current →
  Replace the battery.

d. Adjust the voltage so that the current is at the standard charging level.
e. Set the time according to the charging time suitable for the open-circuit voltage.
f. If charging requires more than 5 hours, it is advisable to check the charging current after a lapse of 5 hours. If there is any change in the amperage, readjust the voltage to obtain the standard charging current.
g. Measure the battery open-circuit voltage after leaving the battery unused for more than 30 minutes.

12.8 V or more --- Charging is complete.
12.7 V or less --- Recharging is required.
Under 12.0 V --- Replace the battery.

▲▲▲▲▲▲▲▲▲▲▲▲▲▲▲▲▲▲▲▲▲▲▲▲▲▲▲▲▲▲▲▲

▼▼▼▼▼▼▼▼▼▼▼▼▼▼▼▼▼▼▼▼▼▼▼▼▼▼▼▼▼▼▼▼

Charging method using a constant voltage charger

a. Measure the open-circuit voltage prior to charging.

TIP

Voltage should be measured 30 minutes after the engine is stopped.

b. Connect a charger and ammeter to the battery and start charging.
c. Make sure that the current is higher than the standard charging current written on the battery.

TIP

If the current is lower than the standard charging current written on the battery, this type of battery charger cannot charge the VRLA (Valve Regulated Lead Acid) battery. A variable voltage charger is recommended.

d. Charge the battery until the battery's charging voltage is 15 V.

TIP

Set the charging time at 20 hours (maximum).

e. Measure the battery open-circuit voltage after leaving the battery unused for more than 30 minutes.

12.8 V or more --- Charging is complete.
12.7 V or less --- Recharging is required.
Under 12.0 V --- Replace the battery.

▲▲▲▲▲▲▲▲▲▲▲▲▲▲▲▲▲▲▲▲▲▲▲▲▲▲▲▲▲▲▲▲

6. Install:
   - Battery
7. Connect:
   - Battery leads
     (to the battery terminals)

ECA13630

NOTICE

First, connect the positive battery lead "1", and then the negative battery lead "2".

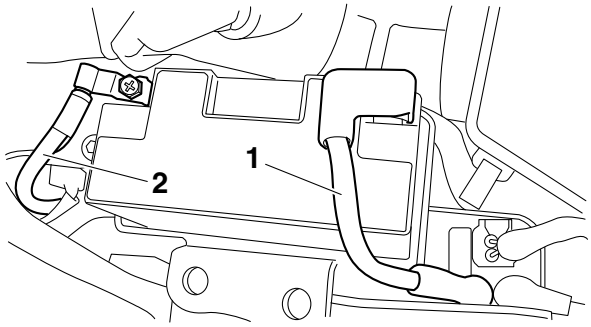

8. Check:
   - Battery terminals
     Dirt → Clean with a wire brush.
     Loose connection → Connect properly.
9. Lubricate:
   - Battery terminals

	Recommended lubricant Dielectric grease

10. Install:
    - Battery holding bracket
    - Seat
    Refer to "GENERAL CHASSIS" on page 4-1.

EAS28040

CHECKING THE RELAYS

Check each switch for continuity with the pocket tester. If the continuity reading is incorrect, replace the relay.

Pocket tester
90890-03112
Analog pocket tester
YU-03112-C

1. Disconnect the relay from the wire harness.
2. Connect the pocket tester ($\Omega \times 1$) and battery (12 V) to the relay terminal as shown.
   Check the relay operation.
   Out of specification → Replace.

Starter relay

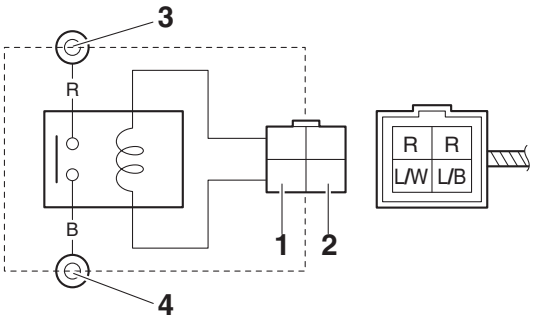

1. Positive battery terminal
2. Negative battery terminal
3. Positive tester probe
4. Negative tester probe

Result
Continuity
(between "3" and "4")

Fuel pump relay

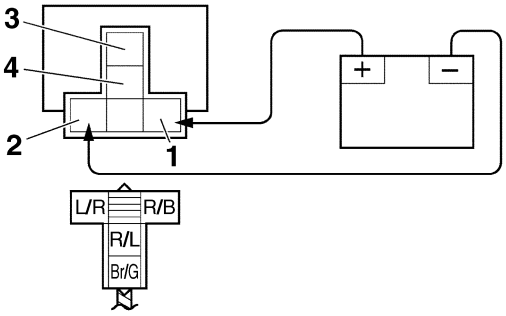

1. Positive battery terminal
2. Negative battery terminal
3. Positive tester probe
4. Negative tester probe

Result
Continuity
(between "3" and "4")

Headlight relay

First step:

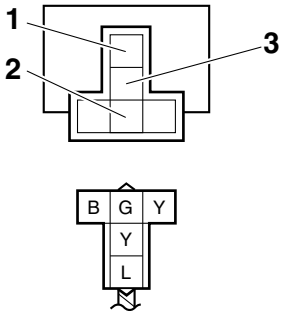

1. Positive tester probe
2. Negative tester probe
3. Negative tester probe

Result
Continuity
(between "1" and "2")
No continuity
(between "1" and "3")

Second step:

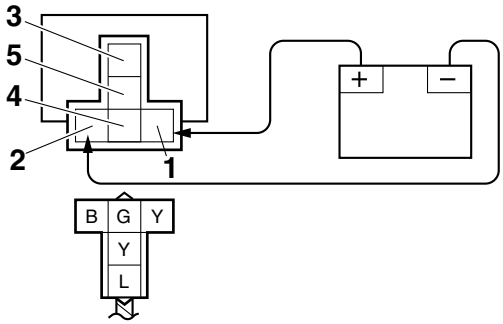

1. Positive battery terminal
2. Negative battery terminal
3. Positive tester probe
4. Negative tester probe
5. Negative tester probe

Result
No continuity
(between "3" and "4")
Continuity
(between "3" and "5")

Radiator fan motor relay

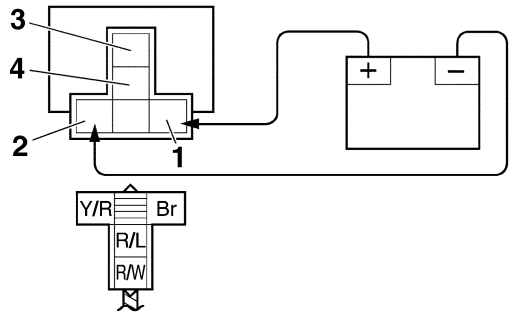

1. Positive battery terminal
2. Negative battery terminal
3. Positive tester probe
4. Negative tester probe

Result
Continuity
(between "3" and "4")

EAS2LS1005
CHECKING THE DIODE

1. Check:
   - Diode
     Out of specification → Replace.

Pocket tester
90890-03112
Analog pocket tester
YU-03112-C

TIP

The pocket tester or the analog pocket tester readings are shown in the following table.

Continuity
Positive tester probe → light green, sky blue "1"
Negative tester probe → black/yellow, sky blue "2"
No continuity
Positive tester probe → black/yellow, sky blue "2"
Negative tester probe → light green, sky blue "1"

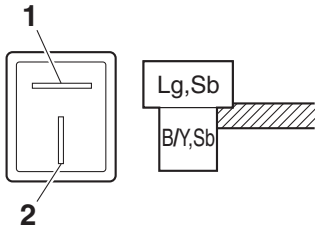

a. Disconnect the diode from the wire harness.
b. Connect the pocket tester (Ω × 1) to the diode terminals as shown.
c. Check the diode for continuity.
d. Check the diode for no continuity.

EAS28060
CHECKING THE SPARK PLUG CAP

1. Check:
   - Spark plug cap resistance
     Out of specification → Replace.

Resistance
10.0 kΩ

a. Remove the spark plug cap from the spark plug lead.
b. Connect the pocket tester (Ω × 1k) to the spark plug cap as shown.

Pocket tester
90890-03112
Analog pocket tester
YU-03112-C

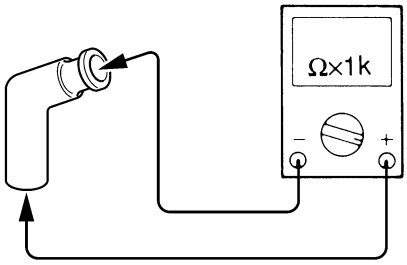

c. Measure the spark plug cap resistance.

EAS28090
CHECKING THE IGNITION COIL

1. Check:
   - Primary coil resistance
     Out of specification → Replace.

Primary coil resistance
3.40–4.60 Ω

▼▼▼▼▼▼▼▼▼▼▼▼▼▼▼▼▼▼▼▼▼▼▼▼▼▼▼▼▼▼▼▼▼

a. Disconnect the ignition coil connectors from the ignition coil terminals.
b. Connect the pocket tester (Ω × 1) to the ignition coil as shown.

Pocket tester
90890-03112
Analog pocket tester
YU-03112-C

- Positive tester probe red/black “1”
- Negative tester probe orange “2”

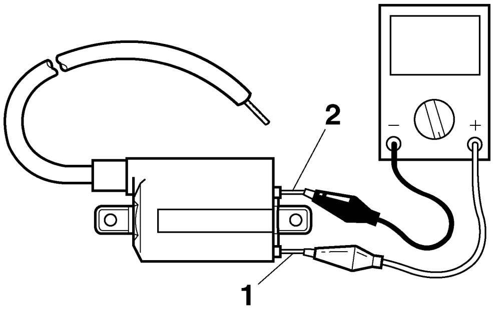

c. Measure the primary coil resistance.

▲▲▲▲▲▲▲▲▲▲▲▲▲▲▲▲▲▲▲▲▲▲▲▲▲▲▲▲▲▲▲▲▲

2. Check:
   - Secondary coil resistance
     Out of specification → Replace.

Secondary coil resistance
10.40–15.60 kΩ

▼▼▼▼▼▼▼▼▼▼▼▼▼▼▼▼▼▼▼▼▼▼▼▼▼▼▼▼▼▼▼▼▼

a. Disconnect the spark plug cap from the ignition coil.
b. Connect the pocket tester (Ω × 1k) to the ignition coil as shown.

Pocket tester
90890-03112
Analog pocket tester
YU-03112-C

- Positive tester probe red/black “1”
- Negative tester probe Spark plug lead “2”

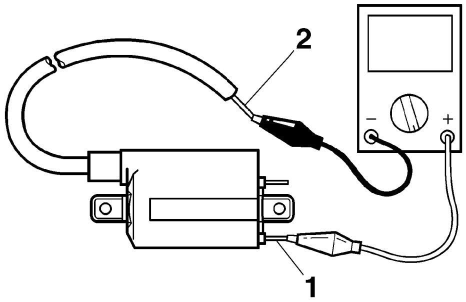

c. Measure the secondary coil resistance.

▲▲▲▲▲▲▲▲▲▲▲▲▲▲▲▲▲▲▲▲▲▲▲▲▲▲▲▲▲▲▲▲▲

EAS28930

CHECKING THE IGNITION SPARK GAP

1. Check:
   - Ignition spark gap
     Out of specification → Perform the ignition system troubleshooting, starting with step 5. Refer to “TROUBLESHOOTING” on page 8-3.

Minimum ignition spark gap
6.0 mm (0.24 in)

TIP

If the ignition spark gap is within specification, the ignition system circuit is operating normally.

▼▼▼▼▼▼▼▼▼▼▼▼▼▼▼▼▼▼▼▼▼▼▼▼▼▼▼▼▼▼▼▼▼

a. Disconnect the spark plug cap from the spark plug.
b. Connect the ignition checker “1” as shown.

Ignition checker
90890-06754
Oppama pet–4000 spark checker
YM-34487

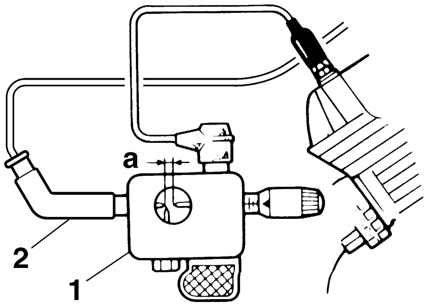

2. Spark plug cap

c. Turn the main switch to “ON” and engine stop switch to “○”.
d. Measure the ignition spark gap “a”.

e. Crank the engine by pushing the start switch "⊛" and gradually increase the spark gap until a misfire occurs.

▲▲▲▲▲▲▲▲▲▲▲▲▲▲▲▲▲▲▲▲▲▲▲▲▲▲▲▲▲▲▲▲▲▲

EAS28120

CHECKING THE CRANKSHAFT POSITION SENSOR

1. Disconnect:
   - Crankshaft position sensor coupler (from the wire harness)
2. Check:
   - Crankshaft position sensor resistance
     Out of specification → Replace the crankshaft position sensor/stator assembly.

Crankshaft position sensor resistance
192.0–288.0 Ω

▼▼▼▼▼▼▼▼▼▼▼▼▼▼▼▼▼▼▼▼▼▼▼▼▼▼▼▼▼▼▼▼▼▼

a. Connect the pocket tester (Ω × 100) to the crankshaft position sensor coupler as shown.

Pocket tester
90890-03112
Analog pocket tester
YU-03112-C

- Positive tester probe
  blue/yellow "1"
- Negative tester probe
  green/white "2"

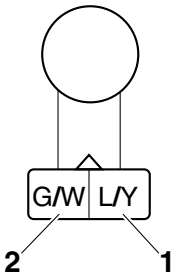

b. Measure the crankshaft position sensor resistance.

▲▲▲▲▲▲▲▲▲▲▲▲▲▲▲▲▲▲▲▲▲▲▲▲▲▲▲▲▲▲▲▲▲▲

EAS28130

CHECKING THE LEAN ANGLE SENSOR

1. Remove:
   - Lean angle sensor
2. Check:
   - Lean angle sensor output voltage
     Out of specification → Replace.

Lean angle sensor output voltage
Less than 65°: 0.4–1.4 V
More than 65°: 3.7–4.4 V

▼▼▼▼▼▼▼▼▼▼▼▼▼▼▼▼▼▼▼▼▼▼▼▼▼▼▼▼▼▼▼▼▼▼

a. Connect the lean angle sensor coupler to the wire harness.
b. Connect the pocket tester (DC 20 V) to the lean angle sensor coupler as shown.

Pocket tester
90890-03112
Analog pocket tester
YU-03112-C

- Positive tester probe
  yellow/green "1"
- Negative tester probe
  black/blue "2"

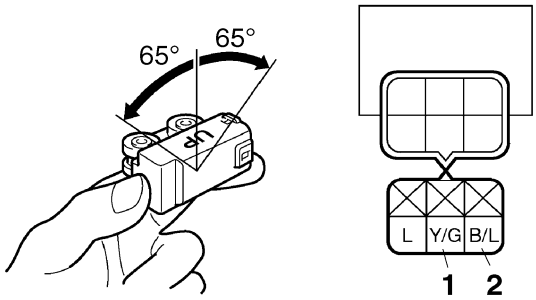

c. Set the main switch to "ON".
d. Tilt the lean angle sensor to 65°.
e. Measure the lean angle sensor output voltage.

▲▲▲▲▲▲▲▲▲▲▲▲▲▲▲▲▲▲▲▲▲▲▲▲▲▲▲▲▲▲▲▲▲▲

EAS28940

CHECKING THE STARTER MOTOR OPERATION

1. Check:
   - Starter motor operation
     Does not operate → Perform the electric starting system troubleshooting, starting with step 4.
     Refer to "TROUBLESHOOTING" on page 8-8.

▼▼▼▼▼▼▼▼▼▼▼▼▼▼▼▼▼▼▼▼▼▼▼▼▼▼▼▼▼▼▼▼▼▼

a. Connect the positive battery terminal "1" and starter motor lead "2" with a jumper lead "3".

EWA13810

WARNING

- **A wire that is used as a jumper lead must have at least the same capacity of the battery lead, otherwise the jumper lead may burn.**

- **This check is likely to produce sparks, therefore, make sure no flammable gas or fluid is in the vicinity.**

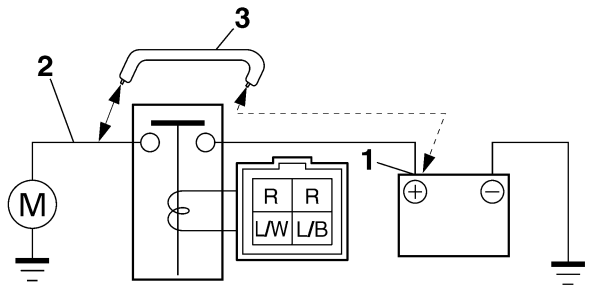

b. Check the starter motor operation.

▲▲▲▲▲▲▲▲▲▲▲▲▲▲▲▲▲▲▲▲▲▲▲▲▲▲▲▲▲▲▲▲

EAS28150

CHECKING THE STATOR COIL

1. Disconnect:
   - AC magneto coupler (from the wire harness)
2. Check:
   - Stator coil resistance
     Out of specification → Replace the crankshaft position sensor/stator coil assembly.

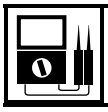	**Stator coil resistance** **0.248–0.372 Ω (W-W)**

▼▼▼▼▼▼▼▼▼▼▼▼▼▼▼▼▼▼▼▼▼▼▼▼▼▼▼▼▼▼▼▼

a. Connect the pocket tester (Ω × 1) to the AC magneto coupler as shown.

	**Pocket tester** **90890-03112** **Analog pocket tester** **YU-03112-C**

- Positive tester probe
  white “1”
- Negative tester probe
  white “2”

- Positive tester probe
  white “1”
- Negative tester probe
  white “3”

- Positive tester probe
  white “2”
- Negative tester probe
  white “3”

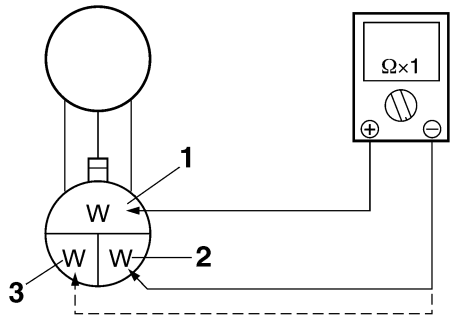

b. Measure the stator coil resistance.

▲▲▲▲▲▲▲▲▲▲▲▲▲▲▲▲▲▲▲▲▲▲▲▲▲▲▲▲▲▲▲▲

EAS28170

CHECKING THE RECTIFIER/REGULATOR

1. Check:
   - Charging voltage
     Out of specification → Replace the rectifier/regulator.

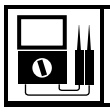	**Charging voltage** **above 14 V at 5000 r/min**

▼▼▼▼▼▼▼▼▼▼▼▼▼▼▼▼▼▼▼▼▼▼▼▼▼▼▼▼▼▼▼▼

a. Connect the engine tachometer to the spark plug lead.
b. Connect the pocket tester (DC 20 V) to the rectifier/regulator coupler as shown.

	**Pocket tester** **90890-03112** **Analog pocket tester** **YU-03112-C**

- Positive tester probe
  red “1”
- Negative tester probe
  black “2”

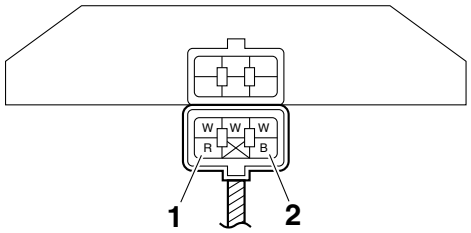

c. Start the engine and let it run at approximately 5000 r/min.
d. Measure the charging voltage.

▲▲▲▲▲▲▲▲▲▲▲▲▲▲▲▲▲▲▲▲▲▲▲▲▲▲▲▲▲▲▲▲

EAS28230

CHECKING THE FUEL SENDER

1. Disconnect:
   - Fuel pump coupler
     (from the wire harness)
2. Drain
   - Fuel
     (from the fuel tank)
3. Remove:
   - Fuel pump assembly
     (from the fuel tank)
4. Check:
   - Fuel sender current
     Out of specification → Replace the fuel pump assembly.

Fuel sender current
Level is less than “a”
Less than 60 mA
Level is more than “a”
More than 135 mA

▼▼▼▼▼▼▼▼▼▼▼▼▼▼▼▼▼▼▼▼▼▼▼▼▼▼▼▼▼▼▼▼▼

a. Connect the pocket tester (DC 5A) and battery to the fuel sender terminal as shown.

Pocket tester
90890-03112
Analog pocket tester
YU-03112-C

- Positive tester probe
  Positive battery terminal
- Negative tester probe
  orange/green “1”
- Negative battery terminal
  black/white “2”

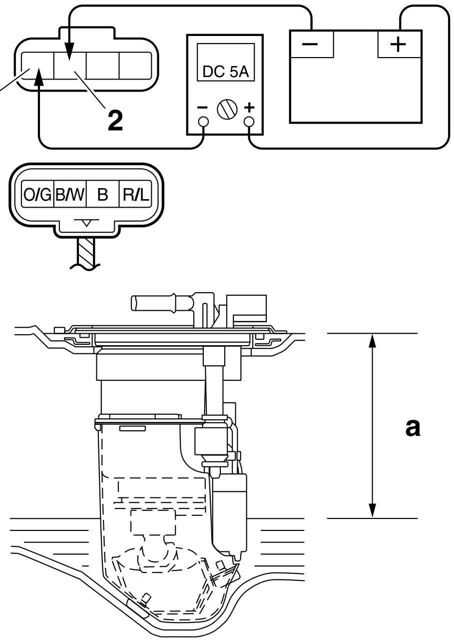

a. Fuel level 79.5 mm (3.13 in)

b. Measure the fuel sender current.

▲▲▲▲▲▲▲▲▲▲▲▲▲▲▲▲▲▲▲▲▲▲▲▲▲▲▲▲▲▲▲▲▲

EAS28240

CHECKING THE SPEED SENSOR

1. Check:
   - Speed sensor output voltage
     Out of specification → Replace.

Output voltage reading cycle
0.6 V–4.8 V–0.6 V–4.8 V–0.6 V

▼▼▼▼▼▼▼▼▼▼▼▼▼▼▼▼▼▼▼▼▼▼▼▼▼▼▼▼▼▼▼▼▼

a. Connect the pocket tester (DC 20 V) to the speed sensor coupler as shown.

Pocket tester
90890-03112
Analog pocket tester
YU-03112-C

- Positive tester probe
  white “1”
- Negative tester probe
  black/blue “2”

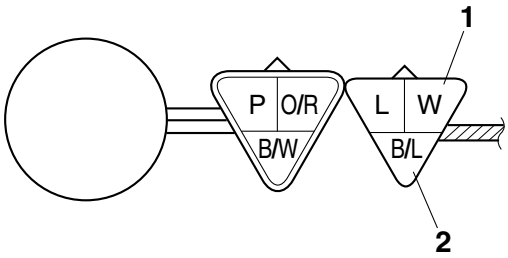

b. Set the main switch to “ON”.
c. Elevate the rear wheels and slowly rotate them.
d. Measure the voltage (DC 20 V) of white and black/blue. With each full rotation of the rear wheel, the voltage reading should cycle from 0.6 V to 4.8 V to 0.6 V to 4.8 V.

▲▲▲▲▲▲▲▲▲▲▲▲▲▲▲▲▲▲▲▲▲▲▲▲▲▲▲▲▲▲▲▲▲▲

EAS28250

CHECKING THE RADIATOR FAN MOTOR

1. Check:
   - Radiator fan motor
     Faulty/rough movement → Replace.

▼▼▼▼▼▼▼▼▼▼▼▼▼▼▼▼▼▼▼▼▼▼▼▼▼▼▼▼▼▼▼▼▼▼

a. Disconnect the radiator fan motor coupler from the wire harness.
b. Connect the battery (DC 12 V) as shown.

• Positive battery terminal black “1” • Negative battery terminal blue/white “2”

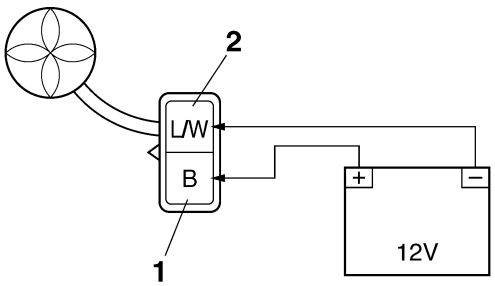

c. Measure the radiator fan motor movement.

▲▲▲▲▲▲▲▲▲▲▲▲▲▲▲▲▲▲▲▲▲▲▲▲▲▲▲▲▲▲▲▲▲▲

EAS1S3L042

CHECKING THE RADIATOR FAN MOTOR CIRCUIT BREAKER

1. Remove:
   - Radiator fan motor circuit breaker
     (from the wire harness)

TIP

The radiator fan motor circuit breaker “1” is attached to the wire harness with white tape near the headlight relay “2”.

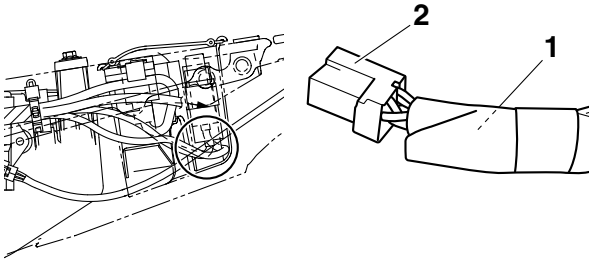

2. Check:
   - Radiator fan motor circuit breaker resistance
     Out of specification → Replace the radiator fan motor circuit breaker.

Radiator fan motor circuit breaker resistance
Zero Ω

▼▼▼▼▼▼▼▼▼▼▼▼▼▼▼▼▼▼▼▼▼▼▼▼▼▼▼▼▼▼▼▼▼▼

a. Connect the pocket tester (Ω × 1) to the radiator fan motor circuit breaker as shown.

Pocket tester
90890-03112
Analog pocket tester
YU-03112-C

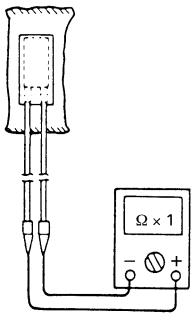

b. Measure the radiator fan motor circuit breaker resistance.

▲▲▲▲▲▲▲▲▲▲▲▲▲▲▲▲▲▲▲▲▲▲▲▲▲▲▲▲▲▲▲▲▲▲

EAS28260

CHECKING THE COOLANT TEMPERATURE SENSOR

1. Remove:
   - Coolant temperature sensor

EWA14130

WARNING

- **Handle the coolant temperature sensor with special care.**

- **Never subject the coolant temperature sensor to strong shocks. If the coolant temperature sensor is dropped, replace it.**

2. Check:
   - Coolant temperature sensor resistance
     Out of specification → Replace.

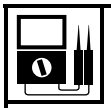	**Coolant temperature sensor resistance** **2.32–2.59 kΩ at 20°C (68°F)** **0.310–0.326 kΩ at 80°C (176°F)**

▼▼▼▼▼▼▼▼▼▼▼▼▼▼▼▼▼▼▼▼▼▼▼▼▼▼▼▼▼▼▼▼▼▼

a. Connect the pocket tester (Ω × 100) to the coolant temperature sensor terminals as shown.

	**Pocket tester** **90890-03112** **Analog pocket tester** **YU-03112-C**

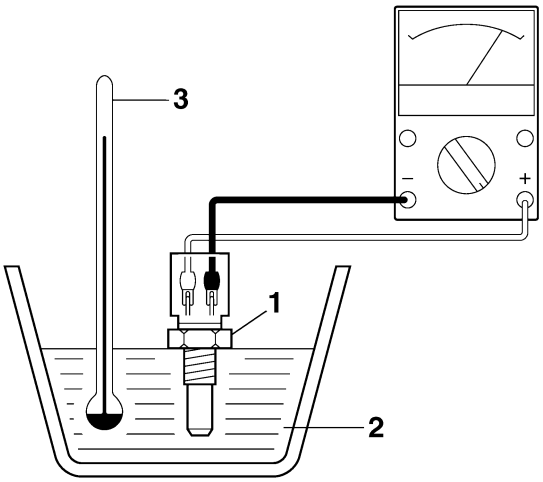

b. Immerse the coolant temperature sensor "1" in a container filled with coolant "2".

TIP

Make sure the coolant temperature sensor terminals do not get wet.

c. Place a thermometer "3" in the coolant.
d. Slowly heat the coolant, and then let it cool down to the specified temperature.
e. Measure the coolant temperature sensor resistance.

▲▲▲▲▲▲▲▲▲▲▲▲▲▲▲▲▲▲▲▲▲▲▲▲▲▲▲▲▲▲▲▲▲▲

EAS28300

CHECKING THE THROTTLE POSITION SENSOR

1. Remove:
   - Throttle position sensor
     (from the throttle body)
2. Check:
   - Throttle position sensor maximum resistance
     Out of specification → Replace the throttle position sensor.

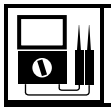	**Resistance** **3.08–5.72 kΩ**

▼▼▼▼▼▼▼▼▼▼▼▼▼▼▼▼▼▼▼▼▼▼▼▼▼▼▼▼▼▼▼▼▼▼

a. Connect the pocket tester (Ω × 1k) to the throttle position sensor terminal as shown.

	**Pocket tester** **90890-03112** **Analog pocket tester** **YU-03112-C**

- Positive tester probe
  blue "1"
- Negative tester probe
  black/blue "2"

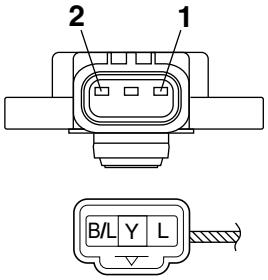

b. Measure the throttle position sensor resistance.

▲▲▲▲▲▲▲▲▲▲▲▲▲▲▲▲▲▲▲▲▲▲▲▲▲▲▲▲▲▲▲▲▲▲

3. Install:
   - Throttle position sensor

TIP

When installing the throttle position sensor, adjust its angle properly. Refer to "ADJUSTING THE THROTTLE POSITION SENSOR" on page 7-7.

EAS28410
CHECKING THE INTAKE AIR PRESSURE SENSOR

1. Check:
   - Intake air pressure sensor output voltage
     Out of specification → Replace.

Intake air pressure sensor output voltage
3.57 – 3.71 V

▼▼▼▼▼▼▼▼▼▼▼▼▼▼▼▼▼▼▼▼▼▼▼▼▼▼▼▼▼▼▼▼▼▼▼▼▼▼

a. Connect the pocket tester (DC 20 V) to the intake air pressure sensor coupler as shown.

Pocket tester
90890-03112
Analog pocket tester
YU-03112-C

- Positive tester probe
  pink/blue "1"
- Negative tester probe
  black/blue "2"

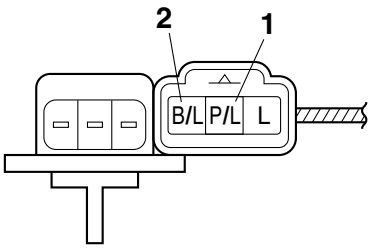

b. Set the main switch to "ON".
c. Measure the intake air pressure sensor output voltage.

▲▲▲▲▲▲▲▲▲▲▲▲▲▲▲▲▲▲▲▲▲▲▲▲▲▲▲▲▲▲▲▲▲▲▲▲▲▲

EAS28420
CHECKING THE INTAKE AIR TEMPERATURE SENSOR

1. Remove:
   - Intake air temperature sensor
     (from the air filter case.)

EWA14110
WARNING

- **Handle the intake air temperature sensor with special care.**
- **Never subject the intake air temperature sensor to strong shocks. If the intake air temperature sensor is dropped, replace it.**

2. Check:
   - Intake air temperature sensor resistance
     Out of specification → Replace.

Intake air temperature sensor resistance
2.21–2.69 Ω

▼▼▼▼▼▼▼▼▼▼▼▼▼▼▼▼▼▼▼▼▼▼▼▼▼▼▼▼▼▼▼▼▼▼▼▼▼▼

a. Connect the pocket tester (Ω × 100) to the intake air temperature sensor terminal as shown.

Pocket tester
90890-03112
Analog pocket tester
YU-03112-C

- Positive tester probe
  brown/white "1"
- Negative tester probe
  black/blue "2"

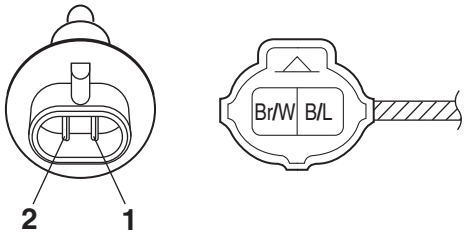

b. Measure the intake air temperature sensor resistance.

▲▲▲▲▲▲▲▲▲▲▲▲▲▲▲▲▲▲▲▲▲▲▲▲▲▲▲▲▲▲▲▲▲▲▲▲▲▲

EAS30587
CHECKING THE AIR INDUCTION SYSTEM SOLENOID

1. Check:
   - Air induction system solenoid resistance
     Out of specification → Replace.

Solenoid resistance
20–24 Ω

▼▼▼▼▼▼▼▼▼▼▼▼▼▼▼▼▼▼▼▼▼▼▼▼▼▼▼▼▼▼▼▼▼▼▼▼▼▼

a. Disconnect the air induction system solenoid coupler from the air induction system solenoid.
b. Connect the pocket tester (Ω × 1) to the air induction system solenoid terminal as shown.

Pocket tester
90890-03112
Analog pocket tester
YU-03112-C

- Positive tester probe →
  Air induction system solenoid terminal “1”
- Negative tester probe →
  Air induction system solenoid terminal “2”

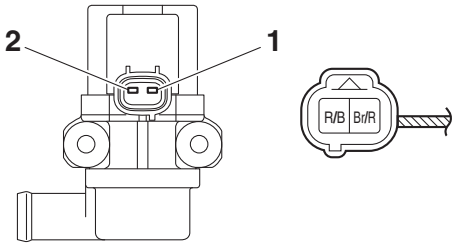

c. Measure the air induction system solenoid resistance.

▲▲▲▲▲▲▲▲▲▲▲▲▲▲▲▲▲▲▲▲▲▲▲▲▲▲▲▲▲▲▲▲▲▲

TROUBLESHOOTING

EAS28451
TROUBLESHOOTING

EAS28460
GENERAL INFORMATION

TIP

The following guide for troubleshooting does not cover all the possible causes of trouble. It should be helpful, however, as a guide to basic troubleshooting. Refer to the relative procedure in this manual for checks, adjustments, and replacement of parts.

EAS28470
STARTING FAILURES

Engine

1. Cylinder and cylinder head
   - Loose spark plug
   - Loose cylinder head or cylinder
   - Damaged cylinder head gasket
   - Damaged cylinder gasket
   - Worn or damaged cylinder
   - Incorrect valve clearance
   - Improperly sealed valve
   - Incorrect valve-to-valve-seat contact
   - Incorrect valve timing
   - Faulty valve spring
   - Seized valve
2. Piston and piston ring(s)
   - Improperly installed piston ring
   - Damaged, worn or fatigued piston ring
   - Seized piston ring
   - Seized or damaged piston
3. Air filter
   - Improperly installed air filter
   - Clogged air filter element
4. Crankcase and crankshaft
   - Improperly assembled crankcase
   - Seized crankshaft

Fuel system

1. Fuel tank
   - Empty fuel tank
   - Clogged fuel strainer
   - Clogged fuel tank drain hose
   - Clogged rollover valve
   - Clogged rollover valve hose
   - Deteriorated or contaminated fuel
2. Fuel pump
   - Faulty fuel pump
   - Faulty fuel injection system relay
   - Clogged or damaged fuel hose
3. Throttle body
   - Deteriorated or contaminated fuel
   - Vacuum leak

Electrical system

1. Battery
   - Discharged battery
   - Faulty battery
2. Fuse(s)
   - Blown, damaged or incorrect fuse
   - Improperly installed fuse
3. Spark plug
   - Incorrect spark plug gap
   - Incorrect spark plug heat range
   - Fouled spark plug
   - Worn or damaged electrode
   - Worn or damaged insulator
   - Faulty spark plug cap
4. Ignition coil
   - Cracked or broken ignition coil body
   - Broken or shorted primary or secondary coils
   - Faulty spark plug lead
5. Ignition system
   - Faulty ECU
   - Faulty crankshaft position sensor
   - Broken AC magneto rotor woodruff key
6. Switches and wiring
   - Faulty main switch
   - Faulty engine stop switch
   - Broken or shorted wiring
   - Faulty neutral switch
   - Faulty start switch
   - Faulty clutch switch
   - Improperly grounded circuit
   - Loose connections
7. Starting system
   - Faulty starter motor
   - Faulty starter relay
   - Faulty diode
   - Faulty starter clutch

EAS28490
INCORRECT ENGINE IDLING SPEED

Engine

1. Cylinder and cylinder head
   - Incorrect valve clearance
   - Damaged valve train components
2. Air filter
   - Clogged air filter element

Fuel system

1. Throttle body
   - Damaged or loose throttle body joint

- Improper throttle cable free play
- Flooded throttle body
- Faulty air induction system

Electrical system

1. Battery
   - Discharged battery
   - Faulty battery
2. Spark plug
   - Incorrect spark plug gap
   - Incorrect spark plug heat range
   - Fouled spark plug
   - Worn or damaged electrode
   - Worn or damaged insulator
   - Faulty spark plug cap
3. Ignition coil
   - Broken or shorted primary or secondary coils
   - Faulty spark plug lead
   - Cracked or broken ignition coil
4. Ignition system
   - Faulty ECU
   - Faulty crankshaft position sensor
   - Broken AC magneto rotor woodruff key

EAS28510

POOR MEDIUM-AND-HIGH-SPEED PERFORMANCE

Refer to “STARTING FAILURES” on page 9-1.

Engine

1. Air filter
   - Clogged air filter element

Fuel system

1. Fuel pump
   - Faulty fuel pump

EAS28530

FAULTY GEAR SHIFTING

Shifting is difficult

Refer to “Clutch drags”.

EAS28540

SHIFT PEDAL DOES NOT MOVE

Shift shaft

- Improperly adjusted shift rod
- Bent shift shaft

Shift drum and shift forks

- Foreign object in a shift drum groove
- Seized shift fork
- Bent shift fork guide bar

Transmission

- Seized transmission gear
- Foreign object between transmission gears
- Improperly assembled transmission

EAS28550

JUMPS OUT OF GEAR

Shift shaft

- Incorrect shift pedal position
- Improperly returned stopper lever

Shift forks

- Worn shift fork

Shift drum

- Incorrect axial play
- Worn shift drum groove

Transmission

- Worn gear dog

EAS28560

FAULTY CLUTCH

Clutch slips

1. Clutch
   - Improperly assembled clutch
   - Improperly adjusted clutch cable
   - Loose or fatigued clutch spring
   - Worn friction plate
   - Worn clutch plate
2. Engine oil
   - Incorrect oil level
   - Incorrect oil viscosity (low)
   - Deteriorated oil

Clutch drags

1. Clutch
   - Unevenly tensioned clutch springs
   - Warped pressure plate
   - Bent clutch plate
   - Swollen friction plate
   - Bent clutch pull rod
   - Broken clutch boss
   - Burnt primary driven gear bushing
   - Match marks not aligned
2. Engine oil
   - Incorrect oil level
   - Incorrect oil viscosity (high)
   - Deteriorated oil

EAS28600
OVERHEATING

Engine
1. Clogged coolant passages
   - Cylinder head and piston
   - Heavy carbon buildup
2. Engine oil
   - Incorrect oil level
   - Incorrect oil viscosity
   - Inferior oil quality

Cooling system
1. Coolant
   - Low coolant level
2. Radiator
   - Damaged or leaking radiator
   - Faulty radiator cap
   - Bent or damaged radiator fin
3. Water pump
   - Damaged or faulty water pump
4. Thermostat
   - Thermostat stays closed
5. Fan motor
   - Faulty fan motor
   - Faulty coolant temperature sensor
6. Hose(s) and pipe(s)
   - Damaged hose
   - Improperly connected hose
   - Damaged pipe
   - Improperly connected pipe

Fuel system
1. Throttle body
   - Damaged or loose throttle body joint
2. Air filter
   - Clogged air filter element

Chassis
1. Brake(s)
   - Dragging brake

Electrical system
1. Spark plug
   - Incorrect spark plug gap
   - Incorrect spark plug heat range
2. Ignition system
   - Faulty ECU

EAS28610
OVERCOOLING

Cooling system
1. Thermostat
   - Thermostat stays open

EAS28620
POOR BRAKING PERFORMANCE
- Worn brake pad
- Worn brake disc
- Air in hydraulic brake system
- Leaking brake fluid
- Faulty brake caliper kit
- Faulty brake caliper seal
- Loose union bolt
- Damaged brake hose
- Oil or grease on the brake disc
- Oil or grease on the brake pad
- Incorrect brake fluid level

EAS1S3L012
FAULTY SHOCK ABSORBER ASSEMBLY

Leaking oil
- Bent, damaged or rusty damper rod
- Cracked or damaged shock absorber
- Damaged oil seal lip

Malfunction
- Fatigue or damaged shock absorber spring
- Bent or damaged damper rod

EAS28670
UNSTABLE HANDLING
1. Handlebar
   - Bent or improperly installed handlebar
2. Steering
   - Incorrect toe-in
   - Bent steering stem
   - Improperly installed steering stem
   - Damaged bearing or bearing race
   - Bent tie-rods
   - Deformed steering knuckles
3. Swingarm
   - Worn bearing or bushing
   - Bent or damaged swingarm
4. Shock absorber assembly
   - Faulty shock absorber spring
   - Leaking oil or gas
5. Tire(s)
   - Uneven tire pressures (left and right)
   - Incorrect tire pressure
   - Uneven tire wear
6. Wheel(s)
   - Incorrect wheel balance
   - Deformed wheel
   - Damaged or loose wheel bearing
   - Bent or loose wheel axle
   - Excessive wheel runout
7. Frame
   - Bent frame

- Damaged frame

EAS28710
FAULTY LIGHTING OR SIGNALING SYSTEM

Headlight does not come on
- Wrong headlight bulb
- Too many electrical accessories
- Hard charging
- Incorrect connection
- Improperly grounded circuit
- Poor contacts (main or light switch)
- Burnt-out headlight bulb

Headlight bulb burnt out
- Wrong headlight bulb
- Faulty battery
- Faulty rectifier/regulator
- Improperly grounded circuit
- Faulty main switch
- Faulty light switch
- Headlight bulb life expired

Tail/brake light does not come on
- Wrong tail/brake light
- Faulty battery
- Too many electrical accessories
- Incorrectly adjusted rear brake light switch
- Incorrect connection
- Broken tail/brake light LED

Tail/brake light broken
- Wrong tail/brake light
- Faulty battery
- Tail/brake light LED life expired

EAS2LS1004

SELF-DIAGNOSTIC FUNCTION AND DIAGNOSTIC CODE TABLE

Self-diagnostic function table

Fault code No.	Item	Reference pages
12	Crankshaft position sensor: no normal signals are received from the crankshaft position sensor.	8-37
13	Intake air pressure sensor: open or short circuit detected.	8-38
14	Intake air pressure sensor: hose system malfunction (clogged or detached hose).	8-40
15	Throttle position sensor: open or short circuit detected.	8-41
16	Throttle position sensor: stuck throttle position sensor is detected.	8-42
21	Coolant temperature sensor: open or short circuit detected.	8-43
22	Intake air temperature sensor: open or short circuit detected.	8-44
30	Latch up detected.	8-46
33	Ignition coil: malfunction detected in the primary lead of the ignition coil.	8-46
39	Injector: open or short circuit detected.	8-47
41	Lean angle sensor: open or short circuit detected.	8-48
42	Speed sensor: no normal signals are received from the speed sensor.	8-50
43	Fuel system voltage: incorrect voltage supplied to the fuel injector and fuel pump.	8-51
44	EEPROM fault code number: an error is detected while reading or writing on EEPROM.	8-52
46	Charging voltage is abnormal.	8-52
50	Faulty ECU (engine control unit) memory. (When this malfunction is detected in the ECU, the fault code number might not appear.)	8-53

Diagnostic code: sensor operation table

Diagnostic code No.	Item	Display	Procedure
01	Throttle position sensor signal • Fully closed position	 14–20	 Check with throttle valve fully closed.
03	Intake air pressure	Displays the intake air pressure.	Push the start switch and check that the intake air pressure changes.
05	Intake air temperature	When engine is cold: Displays temperature closer to ambient temperature. When engine is hot: Displays ambient temperature 20 °C (68 °F).	Check the temperature in the intake manifold and air filter case.
06	Coolant temperature	When engine is cold: Displays temperature closer to ambient temperature. When engine is hot: Displays current coolant temperature.	Check the coolant temperature.
07	Vehicle speed pulse	0–999	Check that the number increases when the rear wheels are rotated. The number is cumulative and does not reset each time the wheel is stopped.
08	Lean angle sensor • Upright • Overturned	Lean angle sensor output voltage 0.4–1.4 3.7–4.4	Remove the lean angle sensor and incline it more than 65 degrees.
09	Fuel system voltage (battery voltage)	Approximately 12.0	Turn the main switch to “ ▯ ” (on), and then compare the actually measured battery voltage with the display value. (If the actually measured battery voltage is low, recharge the battery.)
21	Neutral switch and clutch switch • Clutch lever is squeezed with the transmission in gear • Transmission is in gear or the clutch lever released	 ON OFF	Operate the transmission and clutch lever.

Diagnostic code No.	Item	Display	Procedure
60	EEPROM fault code display • No history • History exists	 00 • No malfunctions detected (If the fault code 44 is indicated, the ECU is defective.) 01 (Cylinder fault code)	 —
61	Malfunction history code display • No history • History exists	 00 Fault codes 12–50 • (If more than one code number is detected, the display alternates every two seconds to show all the detected code numbers. When all code numbers are shown, the display repeats the same process.)	 — —
62	Malfunction history code erasure • No history • History exists	 00 • Displays the total number of malfunctions, including the current malfunction, that have occurred since the history was last erased. (For example, if there have been three malfunctions, “03” is displayed.)	 — Save the malfunction history to the computer, and then delete the fault codes.
70	Control number	0–254 [-]	—

Diagnostic code: actuator operation table

Diagnostic code No.	Item	Actuation	Procedure
30	Ignition coil	Actuates the ignition coil five times at one-second intervals. The “CHECK” indicator and “ ” on the Yamaha diagnostic tool screen come on each time the ignition coil is actuated.	Check that power is supplied to the ignition coil. • Check that a spark is generated.

Diagnostic code No.	Item	Actuation	Procedure
36	Injector	Actuates the injector five times at one-second intervals. The “CHECK” indicator and “ ” on the Yamaha diagnostic tool screen come on each time the fuel injector is actuated.	Check that power is supplied to the injector. Check the injector operation by listening for the operating sound or by confirming the operation visually.
48	Air induction system solenoid	Actuates the air induction system solenoid five times at one-second intervals. The “CHECK” indicator and “ ” on the Yamaha diagnostic tool screen come on each time the air induction system solenoid is actuated.	Check that the air induction system solenoid is actuated five times by listening for the operating sound.
50	Main relay (fuel pump relay)	Actuates the main relay (fuel pump relay) five times at one-second intervals. The “CHECK” indicator and “ ” on the Yamaha diagnostic tool screen come on each time the relay is actuated. (When the relay is on, the “CHECK” indicator and “ ” on the Yamaha diagnostic tool screen go off. When the relay is off, the “CHECK” indicator and “ ” on the Yamaha diagnostic tool screen come on.)	Check that the main relay (fuel pump relay) unit is actuated five times by listening for the operating sound.

Diagnostic code No.	Item	Actuation	Procedure
51	Radiator fan motor relay	Actuates the radiator fan motor relay five times at five-second intervals. (2 seconds on, 3 seconds off) The “CHECK” indicator and “ ” on the Yamaha diagnostic tool screen come on each time the relay is actuated. (When the relay is on, the “CHECK” indicator and “ ” on the Yamaha diagnostic tool screen go off. When the relay is off, the “CHECK” indicator and “ ” on the Yamaha diagnostic tool screen come on.)	Check that the radiator fan motor relay is actuated five times by listening for the operating sound.

EAS28740

WIRING DIAGRAM

YFM700RF/YFM700RSF 2015

1. Crankshaft position sensor
2. AC magneto
3. Main switch
4. Rectifier/regulator
5. Battery
6. Main fuse
7. Starter relay
8. Starter motor
9. Yamaha diagnostic tool coupler
10. Indicator light assembly
11. Fuel level warning light
12. Engine trouble warning light
13. Coolant temperature warning light
14. Reverse indicator light
15. Neutral indicator light
16. Diode
17. Clutch switch
18. Fuel pump relay
19. Neutral switch
20. Fuel pump
21. Air induction system solenoid
22. Fuel injector
23. Reverse switch
24. ECU (engine control unit)
25. Ignition coil
26. Spark plug
27. Intake air temperature sensor
28. Coolant temperature sensor
29. Speed sensor
30. Throttle position sensor
31. Intake air pressure sensor
32. Lean angle sensor
33. Joint coupler
34. Resistor
35. Handlebar switch
36. Light switch
37. Engine stop switch
38. Start switch
39. Headlight relay
40. Headlight
41. Fuel injection system fuse
42. Radiator fan motor fuse
43. Ignition fuse
44. Signaling system fuse
45. Headlight fuse
46. Rear brake light switch
47. Front brake light switch
48. Tail/brake light
49. Circuit breaker (fan motor)
50. Radiator fan motor relay
51. Radiator fan motor

A. Wire harness
B. Front brake light switch sub-wire harness
C. Negative battery sub-wire harness
D. Neutral switch and reverse switch sub-wire harness

EAS28750

COLOR CODE

B	Black
Br	Brown
G	Green
Gy	Gray
L	Blue
Lg	Light green
O	Orange
P	Pink
R	Red
Sb	Sky blue
W	White
Y	Yellow
B/L	Black/Blue
B/W	Black/White
B/Y	Black/Yellow
Br/G	Brown/Green
Br/L	Brown/Blue
Br/R	Brown/Red
Br/W	Brown/White
Br/Y	Brown/Yellow
G/L	Green/Blue
G/W	Green/White
G/Y	Green/Yellow
L/B	Blue/Black
L/R	Blue/Red
L/W	Blue/White
L/Y	Blue/Yellow
O/B	Orange/Black
O/G	Orange/Green
O/R	Orange/Red
P/L	Pink/Blue
R/B	Red/Black
R/L	Red/Blue
R/W	Red/White
W/L	White/Blue
Y/G	Yellow/Green
Y/R	Yellow/Red

YAMAHA

YFM700RF/YFM700RSF 2015 WIRING DIAGRAM

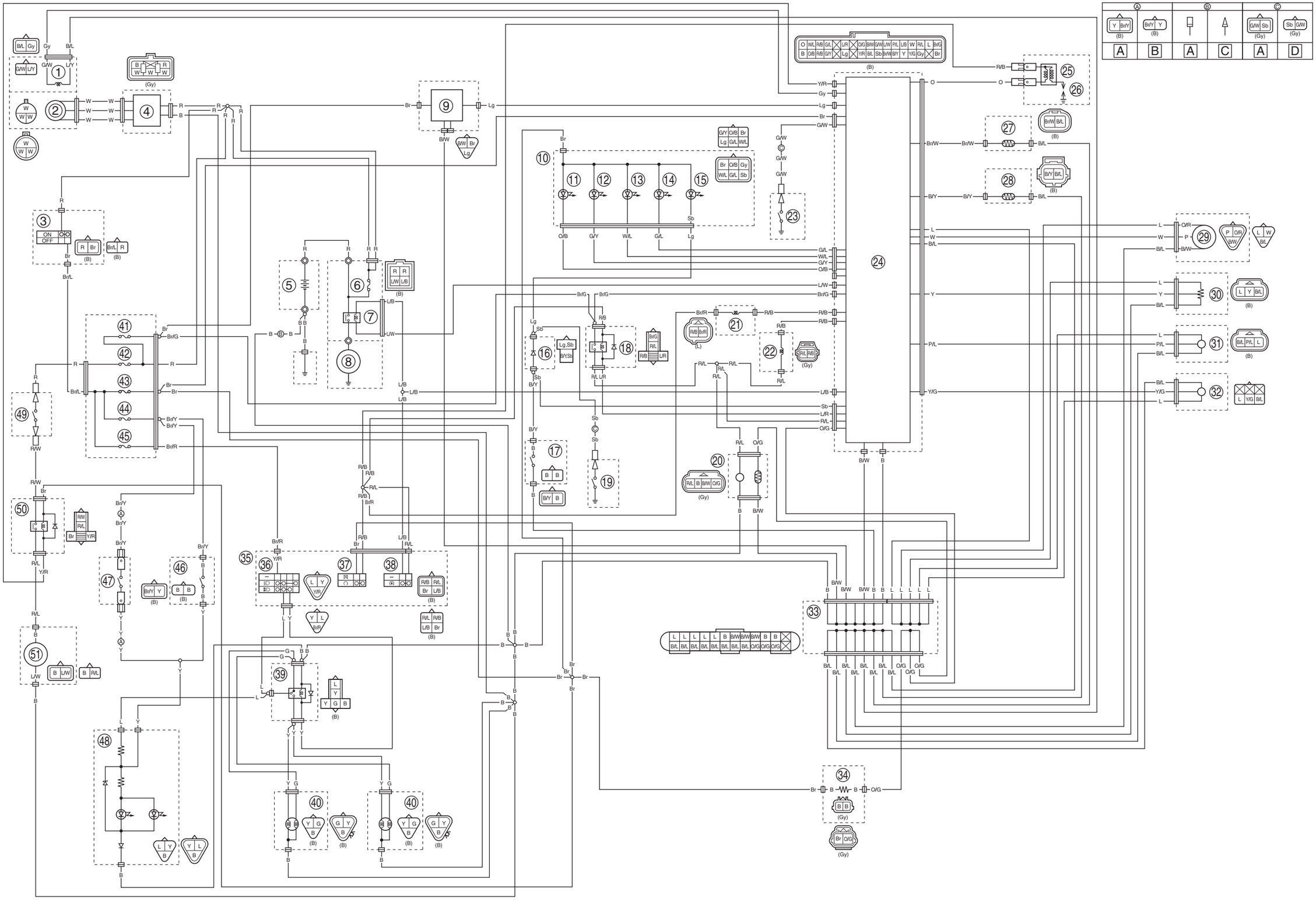

YFM700RF/YFM700RSF 2015 WIRING DIAGRAM