Foreword

Welcome to the growing group of value-conscious people who drive Toyotas. We are proud of the advanced engineering and quality construction of each vehicle we build.

This Owner’s Manual explains the operation of your new Toyota. Please read it thoroughly and have all the occupants follow the instructions carefully. Doing so will help you enjoy many years of safe and trouble-free motoring. For important information about this manual and your Toyota, read the following pages carefully.

When it comes to service, remember that your Toyota dealer knows your vehicle best and is interested in your complete satisfaction. He will provide quality maintenance and any other assistance you may require.

Please leave this Owner’s Manual in this vehicle at the time of resale. The next owner will need this information also.

All information and specifications in this manual are current at the time of printing. However, because of Toyota’s policy of continual product improvement, we reserve the right to make changes at any time without notice.

Please note that this manual applies to all models and explains all equipment, including options. Therefore, you may find some explanations for equipment not installed on your vehicle.

TOYOTA MOTOR CORPORATION

© 2000 TOYOTA MOTOR CORPORATION

All rights reserved. This material may not be reproduced or copied, in whole or in part, without the written permission of Toyota Motor Corporation.

Important information about this manual

Safety and vehicle damage warnings

Throughout this manual, you will see safety and vehicle damage warnings. You must follow these warnings carefully to avoid possible injury or damage.

The types of warnings, what they look like, and how they are used in this manual are explained as follows:

⚠ CAUTION

This is a warning against something which may cause injury to people if the warning is ignored. You are informed about what you must or must not do in order to avoid or reduce the risk to yourself and other people.

NOTICE

This is a warning against something which may cause damage to the vehicle or its equipment if the warning is ignored. You are informed about what you must or must not do in order to avoid or reduce the risk of damage to your vehicle and its equipment.

Safety symbol

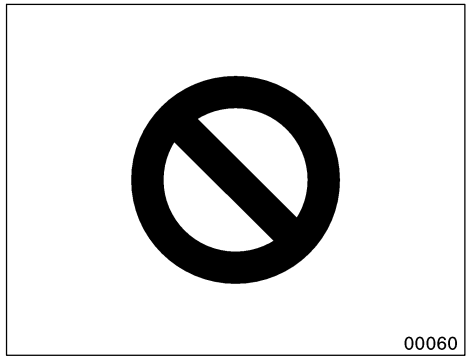

When you see the safety symbol shown above, it means: “Do not...”; “Do not do this”; or “Do not let this happen”.

Important information about your Toyota

New vehicle warranty

Your new vehicle is covered by the following Toyota limited warranties:

- New vehicle warranty
- Emission control systems warranty
- Others

For further information, please refer to the “Owner’s Warranty Information Booklet” or “Owner’s Manual Supplement”.

Your responsibility for maintenance

It is owner’s responsibility to make sure that the specified maintenance is performed. Section 6 gives details of these maintenance requirements. Also included in Section 6 is general maintenance. For scheduled maintenance information, please refer to the “Scheduled Maintenance Guide” or “Owner’s Manual Supplement”.

Accessories, spare parts and modification of your Toyota

A wide variety of non-genuine spare parts and accessories for Toyota vehicles are currently available in the market. You should know that Toyota does not warrant these products and is not responsible either for their performance, repair or replacement, or for any damage they may cause to, or adverse effect they may have on, your Toyota vehicle.

This vehicle should not be modified with non-genuine Toyota products. Modification with non-genuine Toyota products could affect its performance, safety or durability, and may even violate governmental regulations. In addition, damage or performance problems resulting from the modification may not be covered under warranty.

Spark ignition system of your Toyota

The spark ignition system in your Toyota meets all requirements of the Canadian Interference-Causing Equipment Standard.

Installation of a mobile two-way radio system

As the installation of a mobile two-way radio system in your vehicle could affect electronic systems such as multiport fuel injection system/sequential multiport fuel injection system, cruise control system, anti-lock brake system, SRS airbag system and seat belt pretensioner system, be sure to check with your Toyota dealer for precautionary measures or special instructions regarding installation.

Scrapping of your Toyota

The SRS airbag and seat belt pretensioner devices in your Toyota contain explosive chemicals. If the vehicle is scrapped with the airbags and pretensioners left as they are, this may cause an accident such as fire. Be sure to have the systems of the SRS airbag and seat belt pretensioner removed and disposed of by a qualified service shop or by your Toyota dealer before you dispose of your vehicle.

SECTION 1 - 1

OPERATION OF INSTRUMENTS AND CONTROLS

Overview of instruments and controls

Instrument panel overview 2
Instrument cluster overview 4
Indicator symbols on the instrument panel 5

Instrument panel overview

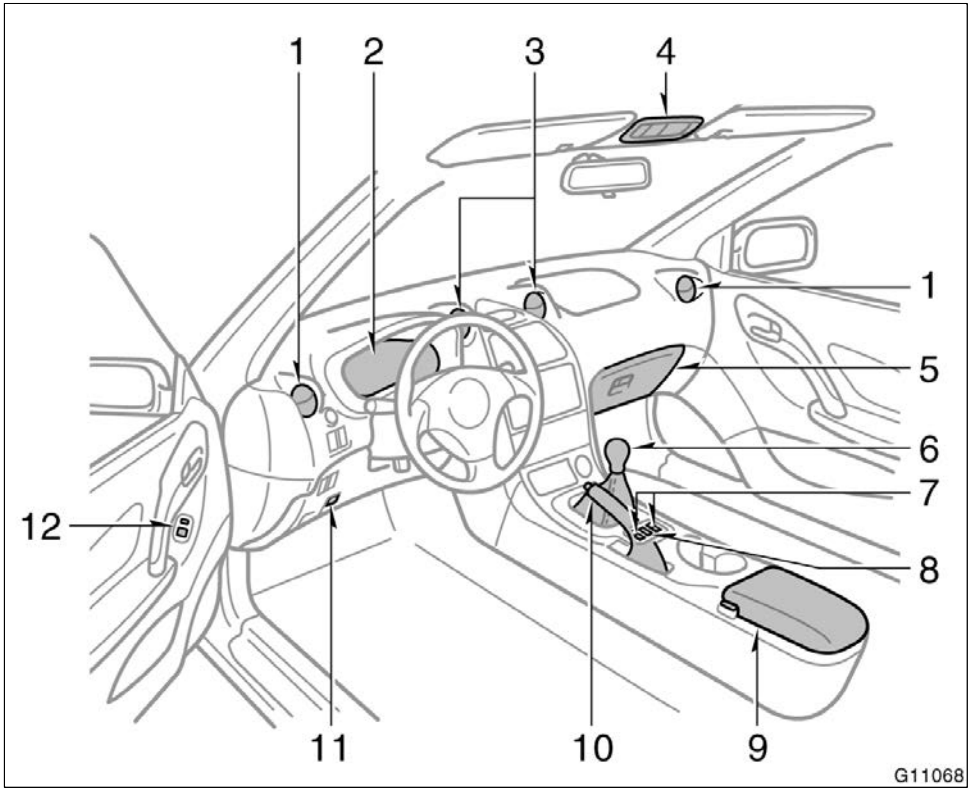

1. Side vents
2. Instrument cluster
3. Center vents
4. Electric moon roof switch and/or interior light
5. Glove box
6. Manual transmission gear shift lever or automatic transmission selector lever
7. Power window switches
8. Power door lock switch
9. Auxiliary box
10. Parking brake lever
11. Hood lock release lever
12. Power rear view mirror control switches

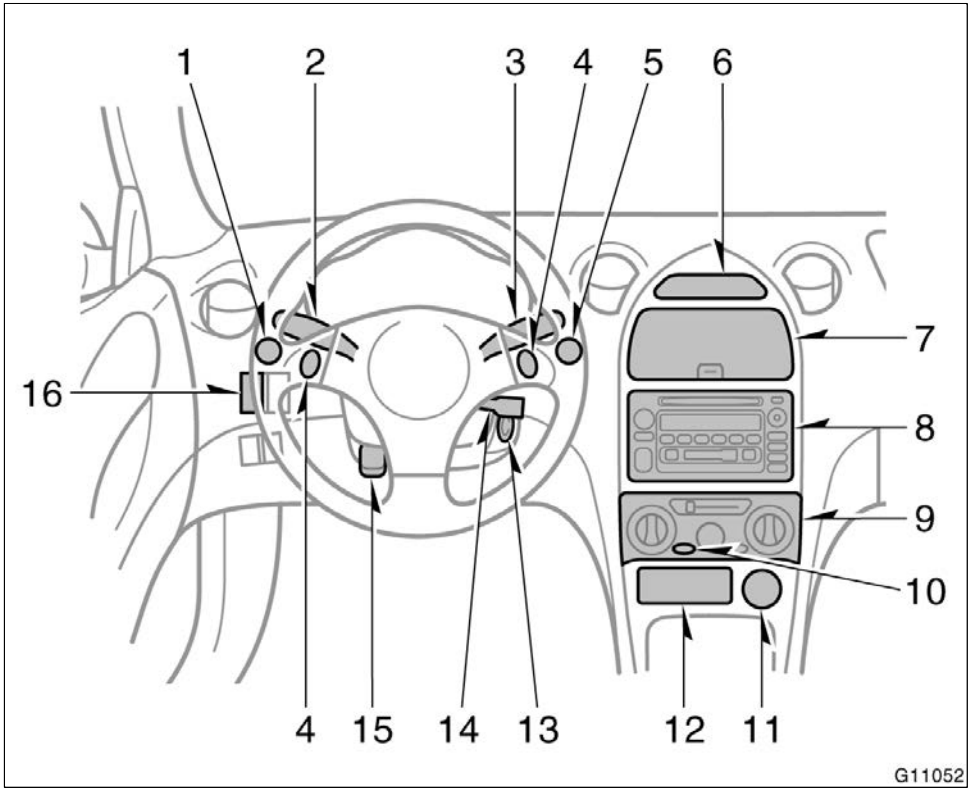

1. Instrument panel light control knob
2. Headlight and turn signal switch, and front fog light switch
3. Wiper and washer switches
4. Transmission shift switches
5. Emergency flasher switch
6. Clock
7. Auxiliary box
8. Car audio
9. Air conditioning controls
10. Rear window defogger switch
11. Cigarette lighter
12. Ashtray
13. Ignition switch
14. Cruise control switch
15. Tilt steering lock release lever
16. Window lock switch

Instrument cluster overview

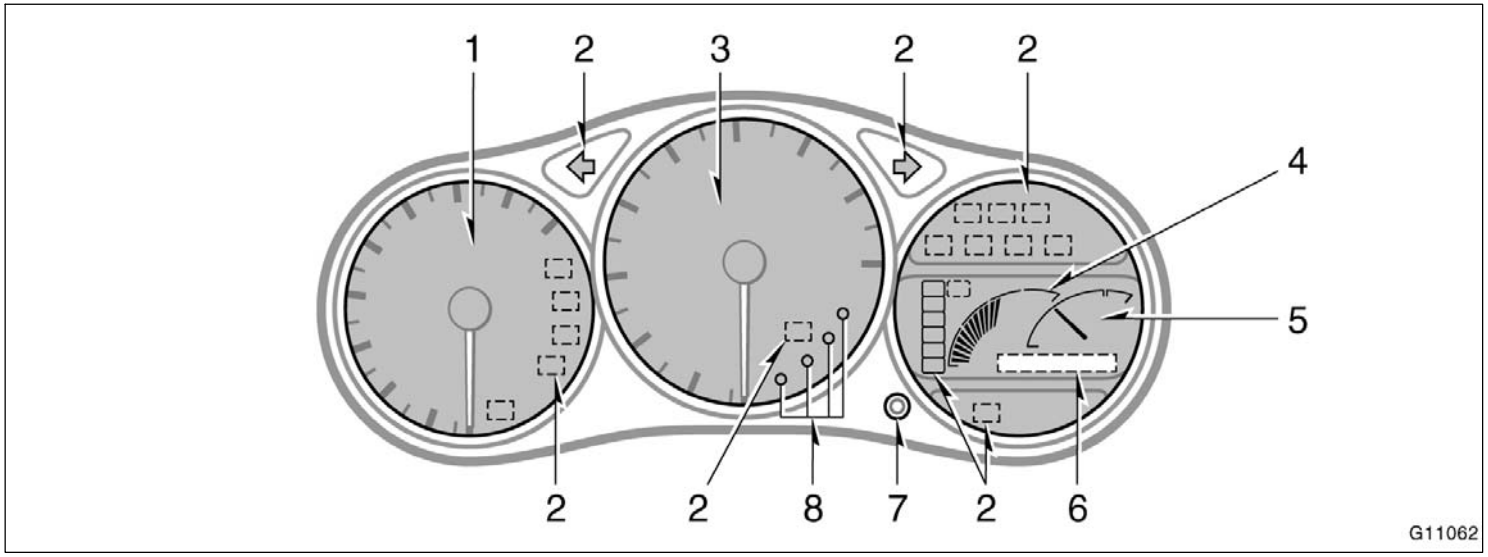

1. Tachometer
2. Service reminder indicators and indicator lights
3. Speedometer
4. Fuel gauge
5. Engine coolant temperature gauge
6. Odometer and two trip meters
7. Trip meter reset knob
8. Gear position indicators

Indicator symbols on the instrument panel

BRAKE or	Brake system warning light*1
	Driver’s seat belt reminder light*1
PASSENGER	Front passenger’s seat belt reminder light*1
	Discharge warning light*1
	Low oil pressure warning light*1
CHECK	Malfunction indicator lamp*1
	Low fuel level warning light*1

ABS or	Anti-lock brake system warning light*1
	Open door warning light*1
	SRS warning light*1
A/T OIL TEMP	Automatic transmission fluid temperature warning light*1
	Headlight low beam indicator light
	Tail light indicator light
	Headlight high beam indicator light

⇦⇨	Turn signal indicator lights
P R N **D 2 L**	Automatic transmission indicator lights
M MODE	M mode indicator light*2
O/D **OFF**	Overdrive-off indicator light
CRUISE	Cruise control indicator light*3

*1: For details, see “Service reminder indicators and warning buzzers” in Section 1-5.

*2: If this light flashes, see “Automatic transmission” in Section 1-6.

*3: If this light flashes, see “Cruise control” in Section 1-6.

SECTION 1 - 2

OPERATION OF INSTRUMENTS AND CONTROLS

Keys and Doors

Keys 8
Side doors 8
Power windows 14
Back door 16
Hood 17
Fuel tank cap 18
Electric moon roof 19

Keys

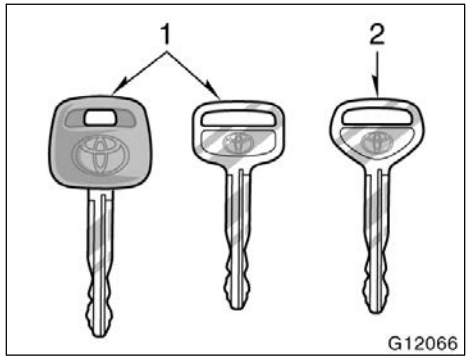

Your vehicle is supplied with two kinds of keys.

1. Master key—This key works in every lock.
2. Sub key—This key will not work in the back door and glove box.

To protect things locked in the glove box or luggage compartment when you have your vehicle parked, leave the sub key with the attendant.

Since the side doors and back door can be locked without a key, you should always carry a spare master key in case you accidentally lock your keys inside the vehicle.

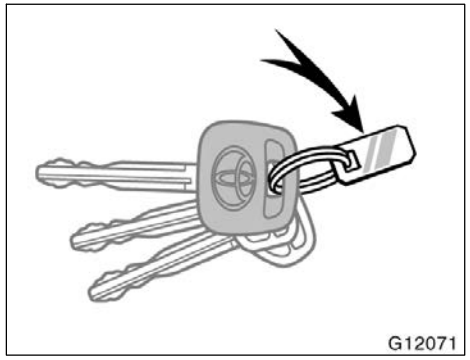

KEY NUMBER PLATE

Your key number is shown on the plate. Keep the plate in a safe place such as your wallet, not in the vehicle.

If you should lose your keys or if you need additional keys, duplicates can be made by a Toyota dealer using the key number.

We recommend to write down the key number and keep it in safe place.

Side doors—

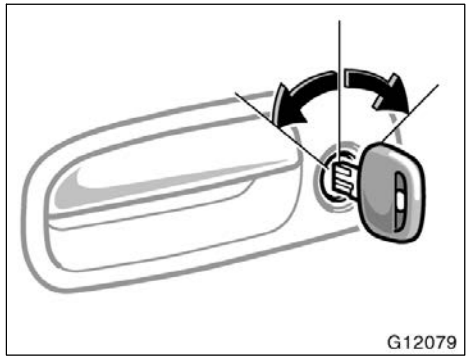

LOCKING AND UNLOCKING WITH KEY

Insert the key into the keyhole and turn it.

To lock: Turn the key forward.
To unlock: Turn the key backward.

Vehicles with a power door lock system—Both side doors and back door lock and unlock simultaneously with either side door. In the driver’s door lock, turning the key once will unlock the driver’s door and twice in succession will unlock both side doors and back door simultaneously.

Vehicles with a power door lock system—When both side doors and back door are unlocked simultaneously with a key, the interior light comes on for about 15 seconds and then fades out, even if the door is not opened. (For further information, see “Interior light” in Section 1-4.)

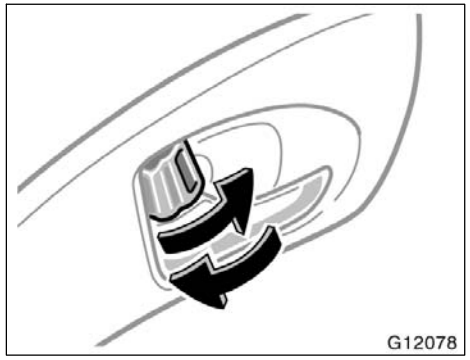

LOCKING AND UNLOCKING WITH INSIDE LOCK KNOB

Move the lock knob.

To lock: Push the knob forward.
To unlock: Pull the knob backward.

Closing the side door with the lock knob in the lock position will also lock the side door. Be careful not to lock your keys in the vehicle.

Vehicles with a power door lock system—The side doors cannot be locked if you leave the key in the ignition switch.

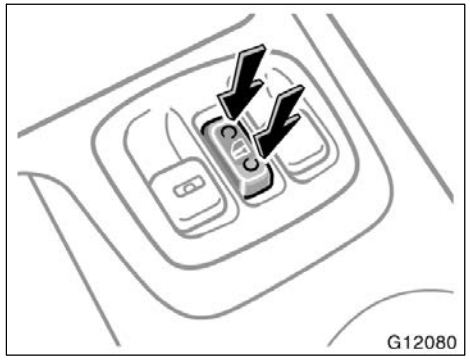

LOCKING AND UNLOCKING WITH POWER DOOR LOCK SWITCH

Push the switch.

To lock: Push the switch on the front side.
To unlock: Push the switch on the rear side.

Both side doors and back door lock or unlock simultaneously.

—Wireless remote control

⚠ CAUTION

Before driving, be sure that the side doors are closed and locked, especially when small children are in the vehicle. Along with the proper use of seat belts, locking the side doors helps prevent the driver and passengers from being thrown out from the vehicle during an accident. It also helps prevent the side doors from being opened unintentionally.

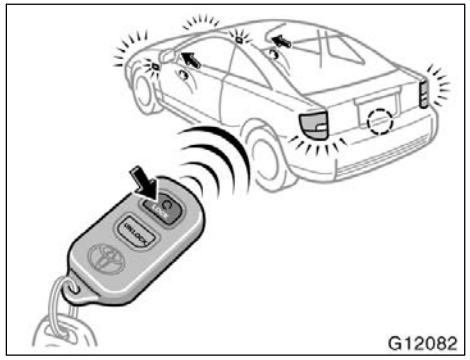

Locking operation

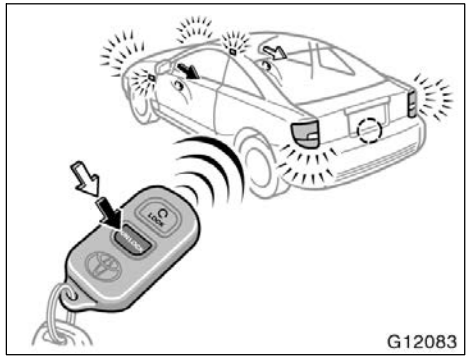

Unlocking operation

Your vehicle has a wireless remote control system that can lock or unlock both side doors and back door, or activate the “PANIC” mode from a distance within approximately 1 m (3 ft.) of the vehicle.

LOCKING AND UNLOCKING THE SIDE DOORS AND BACK DOOR

To lock and unlock both side doors and back door, push the switches of the transmitter slowly and securely.

To lock: Push the “LOCK” switch. Both side doors and back door are locked simultaneously. At this time, parking lights, side marker lights and tail lights flash.

Check to see that both side doors and back door are securely locked.

If either side doors or back door is not securely closed, or if the key is in the ignition switch, locking cannot be performed by the “LOCK” switch.

To unlock: Push the “UNLOCK” switch once to unlock the driver’s door alone. Pushing the switch twice within 3 seconds unlocks both side doors and back door simultaneously. At this time, parking lights, side marker lights and tail lights flash twice.

When both side doors and back door are unlocked simultaneously with a wireless remote control transmitter, the interior light comes on for about 15 seconds and then fades out, even if the door is not opened. (For further information, see “Interior light” in Section 1-4.)

You have 30 seconds to open a door after using the wireless remote unlock feature. If a door is not opened by then, both side doors and back door will be automatically locked again.

If the “LOCK” or “UNLOCK” switch is kept pressed in, the locking or unlocking operation is not repeated. Release the button and then push again.

“PANIC” SWITCH

Pushing the “PANIC” switch blows the horn intermittently and flashes the headlights and tail lights.

The “PANIC” switch is used to deter vehicle theft when you witness anyone attempting to break into or damage your vehicle.

The alarm will last for one minute. To stop alarm midway, do the following:

- Push the “PANIC” switch once again.
- Unlock either side door or back door with the key or wireless remote control transmitter.
- Turn the ignition key from the “LOCK” to “ACC” or “ON” position.

The “PANIC” mode does not work when the ignition key is in the “ACC” or “ON” position.

WIRELESS REMOTE CONTROL TRANSMITTER

The wireless remote control transmitter is an electronic component. Observe the following instructions in order not to cause damage to the transmitter.

- Do not leave the transmitter on places where the temperature becomes high such as on the dashboard.
- Do not disassemble it.
- Avoid knocking it hard against other objects or dropping it.
- Avoid putting it in water.

You can use up to 4 wireless remote control transmitters for the same vehicle. Contact your Toyota dealer for detailed information.

If the wireless remote control transmitter does not actuate the doors or alarm, or operate from a normal distance:

- Check for closeness to a radio transmitter such as a radio station or an airport which can interfere with normal operation of the transmitter.

- The battery may have been consumed. Check the battery in the transmitter. To replace the battery, see “REPLACING TRANSMITTER BATTERY”.

If you lose your transmitter, contact your Toyota dealer as soon as possible to avoid the possibility of theft, or an accident.

If you lose your transmitter, contact your Toyota dealer as soon as possible to avoid the possibility of theft, or an accident. (See “If you lose your wireless remote control transmitter” in Section 4.)

For vehicles sold in U.S.A.

This device complies with Part 15 of the FCC Rules. Operation is subject to the following two conditions:

(1) This device may not cause harmful interference, and (2) this device must accept any interference received, including interference that may cause undesired operation.

NOTICE:
This equipment has been tested and found to comply with the limits for a Class B digital device, pursuant to Part 15 of the FCC Rules. These limits are designed to provide reasonable protection against harmful interference in a residential installation. This equipment generates, uses and can radiate radio frequency energy and, if not installed and used in accordance with the instructions, may cause harmful interference to radio communications. However, there is no guarantee that interference will not occur in a particular installation. If this equipment does cause harmful interference to radio or television reception, which can be determined by turning the equipment off and on, the user is encouraged to try to correct the interference by one or more of the following measures:

- Reorient or relocate the receiving antenna.
- Increase the separation between the equipment and receiver.
- Connect the equipment into an outlet on a circuit different from that to which the receiver is connected.
- Consult the dealer or an experienced radio/TV technician for help.

FCC WARNING:
Changes or modifications not expressly approved by the party responsible for compliance could void the user’s authority to operate the equipment.

For vehicles sold in Canada

Operation is subject to the following two conditions:

(1) this device may not cause interference, and (2) this device must accept any interference, including interference that may cause undesired operation of the device.

REPLACING TRANSMITTER BATTERY

For replacement, use a CR2016 lithium battery or equivalent.

⚠ CAUTION

Special care should be taken that small children do not swallow the removed transmitter battery or components.

NOTICE

- During replacing the transmitter battery, do not push the “LOCK” and “UNLOCK” switches many times.
- When replacing the transmitter battery, be careful not to lose the components.

Replace the transmitter battery by the following procedures:

1. Using a coin or equivalent, open the transmitter case.

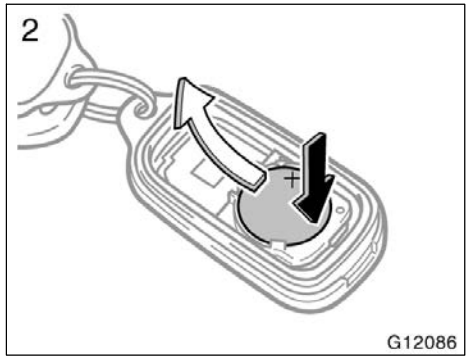

2. Remove the discharged transmitter battery.

NOTICE

Do not bend the terminals.

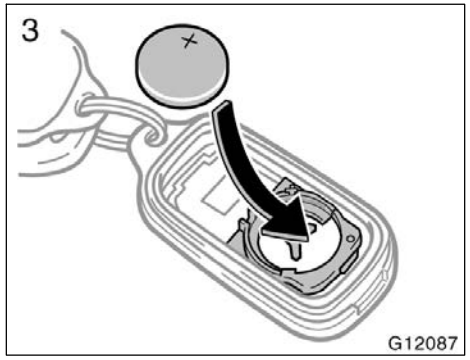

3. Put a new transmitter battery with positive (+) side up.

Close the transmitter case securely.

NOTICE

- Make sure the positive side and negative side of the transmitter battery should be faced correctly.
- Be careful not to bend the electrode of the transmitter battery insertion and that dust or oils do not adhere to the transmitter case.
- Close the transmitter case securely.

After replacing battery, check that the transmitter operates properly. If the transmitter still does not operate properly, contact your Toyota dealer.

Power windows

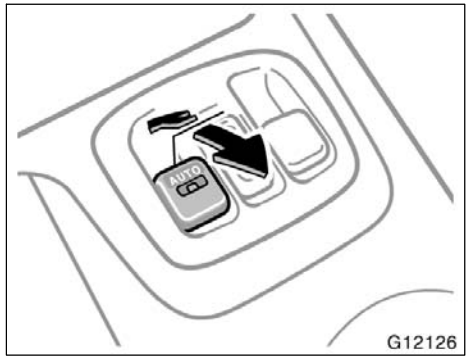

The windows can be operated with the switch on the center console.

The power windows work when the ignition switch is in the “ON” position.

Key off operation: If both side doors are closed, they work for 43 seconds even after the ignition switch is turned off. They stop working when either side door is opened.

OPERATING THE DRIVER’S WINDOW

Use the switch on the driver’s side of the center console.

Normal operation: The window moves as long as you hold the switch.

To open: Lightly push down the switch.
To close: Pull up the switch.

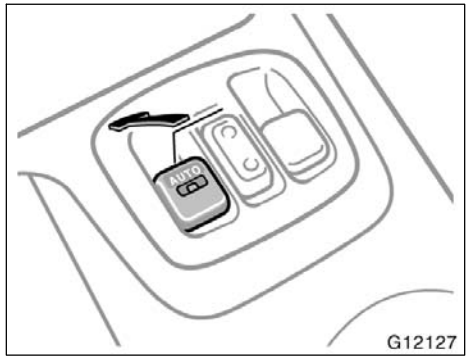

Automatic operation (to open only): Push the switch completely down and then release it. The window will fully open. To stop the window partway, lightly pull the switch up and then release it.

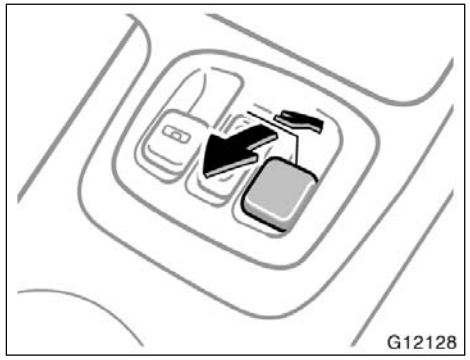

OPERATING THE PASSENGER’S WINDOW

Use the switch on the passenger’s side of the center console.

The window moves as long as you hold the switch.

To open: Push down the switch.
To close: Pull up the switch.

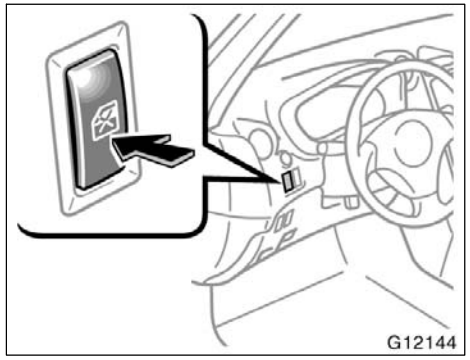

If you push in the window lock switch on the instrument panel, the passenger’s window cannot be operated.

Back door

⚠ CAUTION

To avoid serious personal injury, you must do the following.

- Always make sure the head, hands and other parts of the body of all occupants are kept completely inside the vehicle before you close the power windows. If someone’s neck, head or hands gets caught in a closing window, it could result in a serious injury. When anyone closes the power windows, be sure that they operate the windows safely.
- When small children are in the vehicle, never let them use the power window switches without supervision. Use the window lock switch to prevent them from making unexpected use of the switches.
- Never leave small children alone in the vehicle, especially with the ignition key still inserted. They could use the power window switches and get trapped in a window. Unattended children can become involved in serious accidents.

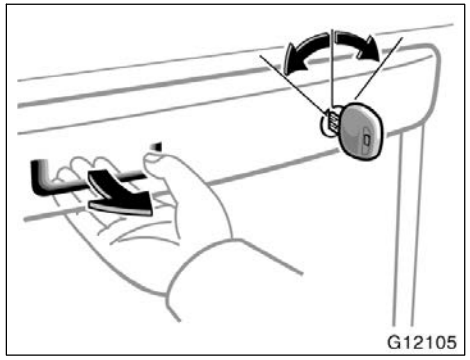

Insert the master key into the keyhole and turn it.

To lock: Turn the key clockwise.
To unlock: Turn the key counterclockwise.

To open the back door, pull the lock release lever.

Operating the power door lock switch or wireless remote control transmitter simultaneously locks or unlocks the back door. (See “Side doors” in this section.)

When closing the back door, make sure it is securely closed.

See “Luggage stowage precautions” in Section 2 for precautions in loading luggage.

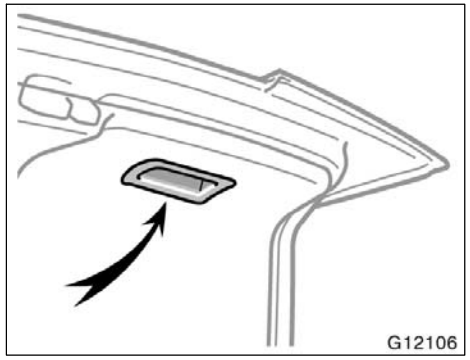

When closing the back door, use the inside handle for easier reach to the back door.

To close the back door, lower it and press down on it. After closing the back door, try pulling it up to make sure it is securely closed.

⚠ CAUTION

Keep the back door closed while driving. This not only keeps the luggage from being thrown out but also prevents exhaust gases from entering the vehicle.

Hood

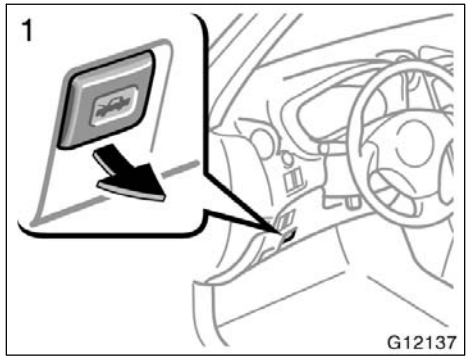

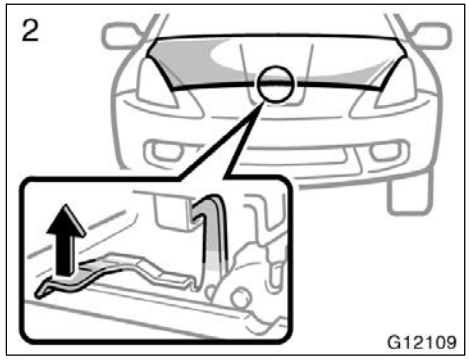

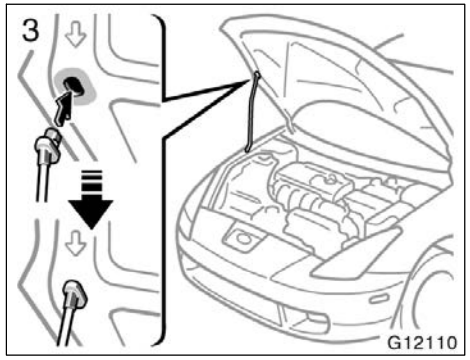

To open the hood:

1. Pull the hood lock release lever. The hood will spring up slightly.

⚠ CAUTION

Before driving, be sure that the hood is closed and securely locked. Otherwise, the hood may open unexpectedly while driving and an accident may occur.

2. In front of the vehicle, pull up the auxiliary catch lever and lift the hood.

3. Hold the hood open by inserting the support rod into the slot.

Before closing the hood, check to see that you have not forgotten any tools, rags, etc. and return the support rod to its clip—this prevents rattles. Then lower the hood and make sure it locks into place. If necessary, press down gently on the front edge to lock it.

⚠ CAUTION

After inserting the support rod into the slot, make sure the rod supports the hood securely from falling down on to your head or body.

NOTICE
Be sure to return the support rod to its clip before closing the hood. Closing the hood with the support rod up could cause the hood to bend.

Fuel tank cap

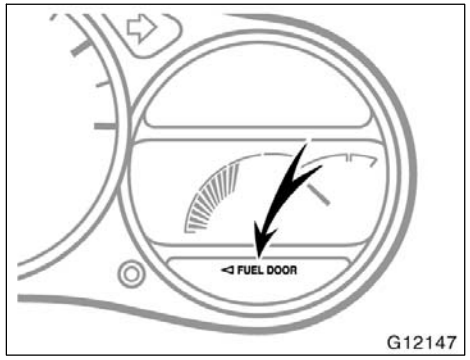

This indicates that the fuel filler door is on the left side of your vehicle.

1. To open the fuel filler door, pull the lever up.

   When refueling, turn off the engine.

CAUTION
● Do not smoke, cause sparks or allow open flames when refueling. The fumes are flammable. ● When opening the cap, do not remove the cap quickly. In hot weather, fuel under pressure could cause injury by spraying out of the filler neck if the cap is suddenly removed.

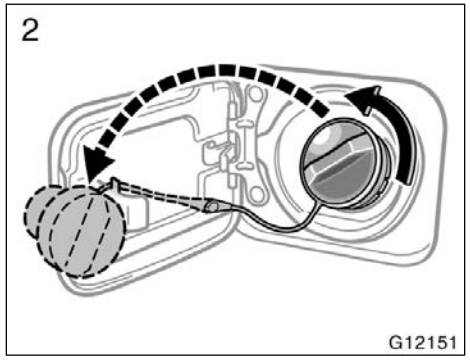

2. To remove the fuel tank cap, turn the cap slowly counterclockwise, then pause slightly before removing it. After removing the cap, hang the tether as shown in the illustration.

It is not unusual to hear a slight swoosh when the cap is opened. When installing, turn the cap clockwise till you hear a click.

If the cap is not tightened securely, the malfunction indicator lamp comes on. Make sure the cap is tightened securely.

The indicator lamp goes off after driving several times. If the indicator lamp does not go off, contact your Toyota dealer as soon as possible.

⚠ CAUTION

- Make sure the cap is tightened securely to prevent fuel spillage in case of an accident.
- Use only a genuine Toyota fuel tank cap for replacement. It has a built-in check valve to reduce fuel tank pressure.

Electric moon roof

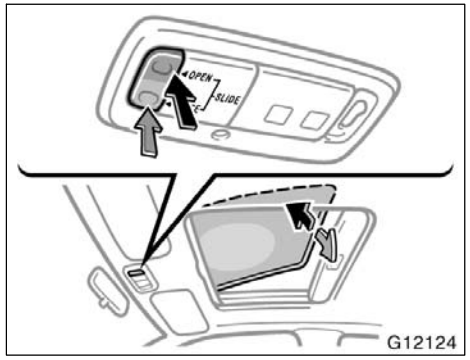

Tilting operation

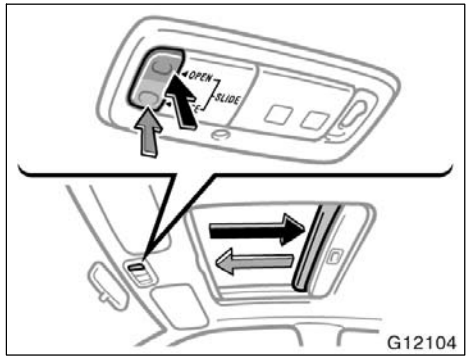

Sliding operation

To operate the moon roof, use the switch beside the interior light.

The moon roof works when the ignition switch is in the “ON” position.

Key off operation: If both side doors are closed, it works for 43 seconds even after the ignition switch is turned off. It stops working when either side door is opened.

Tilting operation—

To tilt up: Push the switch briefly on the “OPEN” side. The roof will tilt up completely.

To stop the roof partway, push the switch either the “OPEN” or “CLOSE” side briefly.

The sun shade will open lightly with the moon roof. To open the sun shade completely, pull it back by hand.

To lower: Push the switch briefly on the “CLOSE” side. The roof will lower completely.

Sliding operation—

To open (with the roof tilting up): Push the switch on the “OPEN” side briefly. The roof will open completely.

To open (with the roof tilting down): Push the switch on the “OPEN” side for more than 2 seconds. The roof will open completely after tilting up.

To stop the roof partway, push the switch either the “OPEN” or “CLOSE” side briefly.

The sun shade will be opened together with the roof.

To close: Push the switch briefly on the “CLOSE” side. The roof will close completely.

Sun shade operation—

The sun shade can be closed by hand.

Jam protection function: During closing operation, the moon roof stops and opens half way if something gets caught between the moon roof and frame.

If the moon roof receives a strong impact, this function may work even if nothing is caught.

When the battery is disconnected, the moon roof cannot operate automatically and the jam protection function will not function correctly. Therefore, you need to normalize the moon roof as follows.

To normalize: Close the moon roof, and continue to hold the switch up briefly after the moon roof reaches the completely closed position and the motor is blocked.

If the moon roof cannot be operated properly, have it checked by your Toyota dealer.

There are cases where malfunctions may activate the jam protection function, which will prevent the roof from closing completely. In this case, pushing and holding the switch on the “CLOSE” side will close the roof completely.

⚠ CAUTION

To avoid serious personal injury, you must do the following.

- While the vehicle is moving, always keep the head, hands and other parts of the body of all occupants away from the roof opening. Otherwise, you could be seriously injured if the vehicle stops suddenly or if the vehicle is involved in an accident.
- Always make sure nobody places his/her head, hands and other parts of the body in the roof opening before you close the roof. If someone’s neck, head or hands gets caught in the closing roof, it could result in a serious injury. When anyone closes the roof, first make sure it is safe to do so.

- Never leave small children alone in the vehicle, especially with the ignition key still inserted. They could use the moon roof switches and get trapped in the roof opening. Unattended children can become involved in serious accidents.
- Never sit on top of the vehicle around the roof opening.
- Never try jamming any part of your body to make the jam protection function work intentionally.
- The jam protection function may not work if something gets caught just before the moon roof is fully closed.

NOTICE

- There is the possibility that water or rain will get into the vehicle if you operate the moon roof after a rainfall, snowfall or car wash. Wipe the moon roof dry with a cloth before operating it.
- Do not touch the plastic resin moon roof with anything hard or sharp. The roof is damaged more easily than ordinary glass.
- When washing the plastic resin moon roof, use a mild soap or neutral detergent. Do not use wax, window cleaner or abrasive cleaner—these may damage the plastic resin moon roof. (See “Washing and waxing your Toyota” in Section 5.)
- Do not use organic substances (gasoline, kerosene, benzine or strong solvents), which may toxic or cause damage.
- Do not use window scraper or deicer when the plastic resin moon roof is heavily coated with frost or ice. The plastic resin moon roof is easily damaged.

SECTION 1 - 3

OPERATION OF INSTRUMENTS AND CONTROLS

Seats, Seat belts, Steering wheel and Mirrors

Seats 24
Front seats 24
Fold-down rear seat 27
Seat belts 28
SRS driver and front passenger airbagsgs 34
SRS side airbags 42
Child restraint 47
Tilt steering wheel 61
Outside rear view mirrors 61
Anti-glare inside rear view mirror or 62
Vanity mirrors 63

Seats

While the vehicle is being driven, all vehicle occupants should have the seatback upright, sit well back in the seat and properly wear the seat belts provided.

CAUTION

- Do not drive the vehicle unless the occupants are properly seated. Do not allow sitting on top of a folded-down seatback, or in the luggage compartment. Persons not properly seated and/or properly restrained by seat belts can be severely injured in the event of emergency braking or a collision.
- During driving, do not allow passengers to stand up or move around between seats. Severe injuries can occur in the event of emergency braking or a collision.

Front seats—
—Front seat precautions
(on vehicles with SRS side airbags)

CAUTION

The SRS side airbags are installed in the driver and front passenger seats, observe the following precautions.

- Do not lean against the front door when the vehicle is in use. The side airbag inflates with considerable speed and force; you may be killed or seriously injured.
- Do not modify or replace the seats or surface of the front seats with the side airbags. Such changes may disable the system or cause the side airbags to inflate, resulting in death or serious injury. Consult your Toyota dealer.
- Do not use accessories for the seats which cover the parts where the side airbags should inflate. Such accessories may prevent the side airbags from activating correctly, causing death or serious injury.

—Seat adjustment precautions

Adjust the driver's seat so that the foot pedals, steering wheel and instrument panel controls are within easy reach of the driver.

CAUTION

- Adjustments should not be made while the vehicle is moving, as the seat may unexpectedly move and cause the driver to lose control of the vehicle.
- When adjusting the seat, be careful not to hit the seat against a passenger or luggage.
- After adjusting the seat position, try sliding it forward and backward to make sure it is locked in position.
- After adjusting the seatback, exert body pressure to make sure it is locked in position.
- Do not put objects under the seats. The objects may interfere with the seat-lock mechanism or unexpectedly push up the seat position adjusting lever; the seat may suddenly move, causing the driver to lose control of the vehicle.

—Adjusting front seats

- While adjusting the seat, do not put your hands under the seat or near the moving parts. You may jam your hands or fingers.

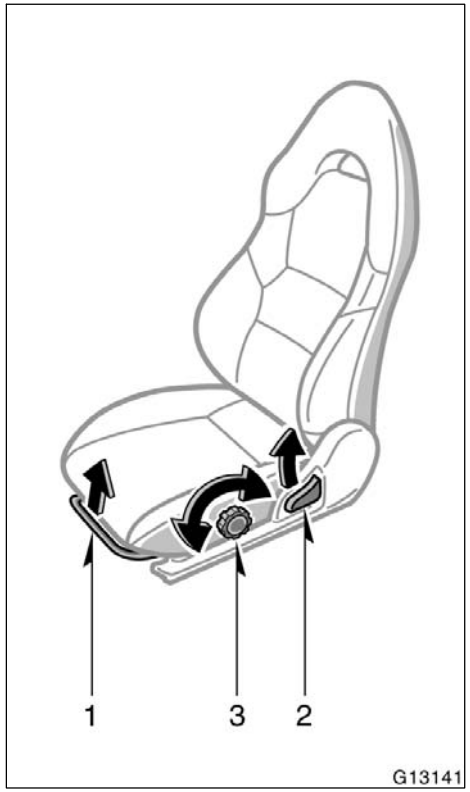

1. SEAT POSITION ADJUSTING LEVER

Hold the center of the lever and pull it up. Then slide the seat to the desired position with slight body pressure and release the lever.

2. SEATBACK ANGLE ADJUSTING LEVER

Lean forward and pull the lever up. Then lean back to the desired angle and release the lever.

⚠ CAUTION

To reduce the risk of sliding under the lap belt during a collision, avoid reclining the seatback any more than needed. The seat belts provide maximum protection in a frontal or rear collision when the driver and the passenger are sitting up straight and well back in the seats. If you are reclined, the lap belt may slide past your hips and apply restraint forces directly to the abdomen. Therefore, in the event of a frontal collision, the risk of personal injury may increase with increasing recline of the seatback.

3. SEAT CUSHION ANGLE ADJUSTING KNOB

Turn the knob either way.

—Moving passenger’s seat for rear seat entry

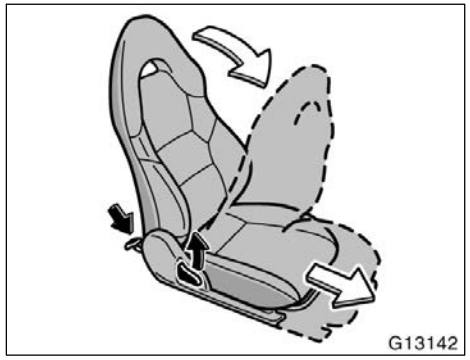

For easy access to the rear seat, do this.

1. Lift the seatback angle adjusting lever or press the pedal behind the seatback.

   The seat will slide forward.

2. Move the seat to the front-most position.

After passengers are in, lift up the seatback and return the seat until it locks.

⚠ CAUTION

- After putting back the seat, try pushing the seat forward and rearward to make sure it is secured in place.
- Never allow anyone to rest their foot on the release pedal while the vehicle is moving.

Fold-down rear seat

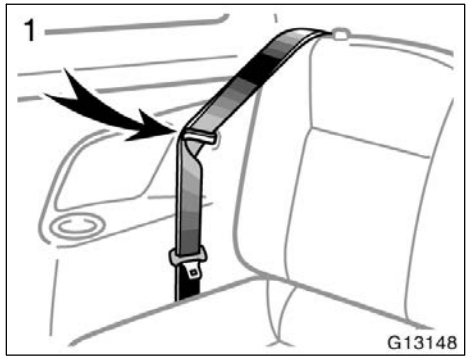

1. Make sure the shoulder belt passes through the hanger when folding the rear seat.

This prevents the shoulder belt from being damaged.

CAUTION

The seat belt must be removed from the hanger when the seat belt is in use.

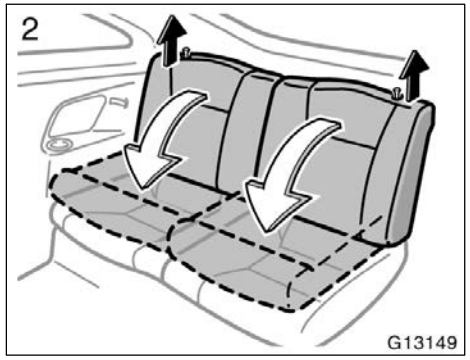

2. Pull the lock release button and fold down the seatback.

Each seatback may be folded separately.

This will enlarge the luggage compartment as far as the front seatbacks. See “Luggage stowage precautions” in Section 2 for precautions in loading luggage.

CAUTION

When returning the seatback to the upright position:

- Make sure the seat belts are not twisted or caught in the seatback and are arranged in their proper position and are ready to use.
- Make sure the seatback is securely locked by pushing forward and rearward on the top of the seatback and that the red mark at the button on the top of the seatback cannot be seen. Failure to do so will prevent seat belt from operating properly.

Seat belts—
—Seat belt precautions

Toyota strongly urges that the driver and passengers in the vehicle be properly restrained at all times with the seat belts provided. Failure to do so could increase the chance of injury and/or the severity of injury in accidents.

Child. Use a child restraint system appropriate for the child until the child becomes large enough to properly wear the vehicle’s seat belts. See “Child restraint” for details.

If a child is too large for a child restraint system, the child should sit in the rear seat and must be restrained using the vehicle’s seat belt. According to accident statistics, the child is safer when properly restrained in the rear seat than in the front seat.

If a child must sit in the front seat, the seat belts should be worn properly. If an accident occurs and the seat belts are not worn properly, the force of the rapid inflation of the airbag may cause death or serious injury to the child.

Do not allow the child to stand up or kneel on either rear or front seats. An unrestrained child could suffer serious injury or death during emergency braking or a collision. Also, do not let the child sit on your lap. It does not provide sufficient restraint.

Pregnant woman. Toyota recommends the use of a seat belt. Ask your doctor for specific recommendations. The lap belt should be worn securely and as low as possible over the hips and not on the waist.

Injured person. Toyota recommends the use of a seat belt. Depending on the injury, first check with your doctor for specific recommendations.

⚠ CAUTION

Persons should ride in their seats properly wearing their seat belts whenever the vehicle is moving. Otherwise, they are much more likely to suffer serious bodily injury or death in the event of sudden braking or a collision.

When using the seat belts, observe the following:

- Use the belt for only one person at a time. Do not use a single belt for two or more people—even children.
- Avoid reclining the seatbacks too much. The seat belts provide maximum protection when the seatbacks are in the upright position. (Refer to the seat adjustment instructions.)
- Be careful not to damage the belt webbing or hardware. Take care that they do not get caught or pinched in the seat or side doors.
- Inspect the belt system periodically. Check for cuts, fraying, and loose parts. Damaged parts should be replaced. Do not disassemble or modify the system.
- Keep the belts clean and dry. If they need cleaning, use a mild soap solution or lukewarm water. Never use bleach, dye, or abrasive cleaners—they may severely weaken the belts. (See “Cleaning the interior” in Section 5.)
- Replace the belt assembly (including bolts) if it has been used in a severe impact. The entire assembly should be replaced even if damage is not obvious.

—Seat belts

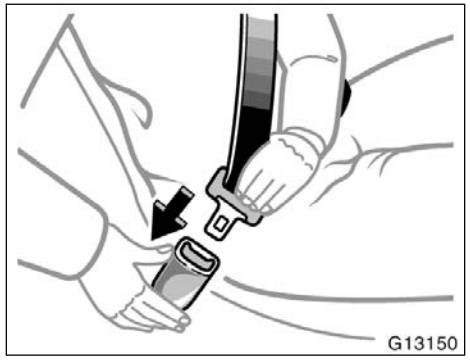

Adjust the seat as needed (front seats only) and sit up straight and well back in the seat. To fasten your belt, pull it out of the retractor and insert the tab into the buckle.

You will hear a click when the tab locks into the buckle.

The seat belt length automatically adjusts to your size and the seat position.

The retractor will lock the belt during a sudden stop or on impact. It also may lock if you lean forward too quickly. A slow, easy motion will allow the belt to extend, and you can move around freely.

If the seat belt cannot be pulled out of the retractor, firmly pull the belt and release it. You will then be able to smoothly pull the belt out of the retractor.

When a passenger’s shoulder belt is completely extended and is then retracted even slightly, the belt is locked in that position and cannot be extended. This feature is used to hold the child restraint system securely. (For details, see “Child restraint” in this section.) To free the belt again, fully retract the belt and then pull the belt out once more.

⚠ CAUTION

- After inserting the tab, make sure the tab and buckle are locked and that the belt is not twisted.
- Do not insert coins, clips, etc. in the buckle as this may prevent you from properly latching the tab and buckle.
- If the seat belt does not function normally, immediately contact your Toyota dealer. Do not use the seat until the seat belt is fixed. It cannot protect an adult occupant or your child from injury.

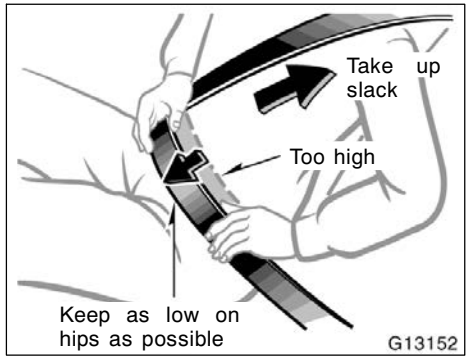

Adjust the position of the lap and shoulder belts.

Position the lap belt as low as possible on your hips—not on your waist, then adjust it to a snug fit by pulling the shoulder portion upward through the latch plate.

⚠ CAUTION

- Both high-positioned lap belts and loose-fitting belts could cause serious injuries due to sliding under the lap belt during a collision or other unintended result. Keep the lap belt positioned as low on hips as possible.
- For your safety, do not place the shoulder belt under your arm.

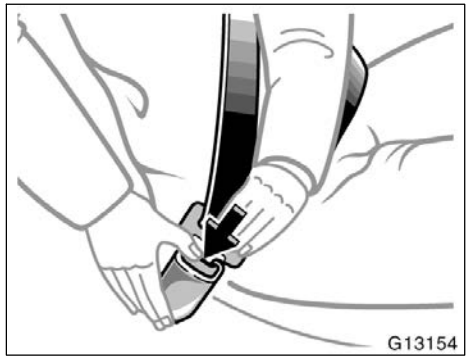

To release the belt, press the buckle-release button and allow the belt to retract.

If the belt does not retract smoothly, pull it out and check for kinks or twists. Then make sure it remains untwisted as it retracts.

—Stowing the front passenger’s seat belt

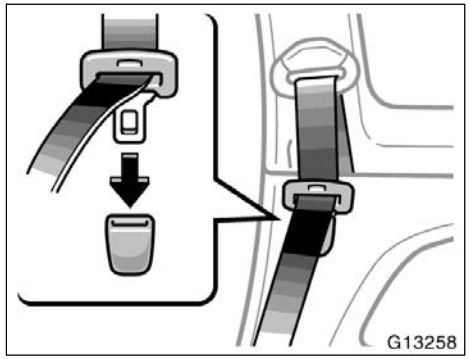

The seat belt can be stowed in the tongue holder when not in use.

⚠ CAUTION

The seat belt must be removed from the tongue holder when the seat belt is in use.

—Seat belt extender

If your seat belt cannot be fastened securely because it is not long enough, a personalized seat belt extender is available from your Toyota dealer free of charge.

Please contact your local Toyota dealer so that the dealer can order the proper required length for the extender. Bring the heaviest coat you expect to wear for proper measurement and selection of length. Additional ordering information is available at your Toyota dealer.

⚠ CAUTION

When using the seat belt extender, observe the following. Failure to follow these instructions could result in less effectiveness of the seat belt restraint system in case of vehicle accident, increasing the chance of personal injury.

- Never use the seat belt extender if you can fasten the seat belt without it.

- Remember that the extender provided for you may not be safe when used on a different vehicle, or for another person or at a different seating position than the one originally intended for.

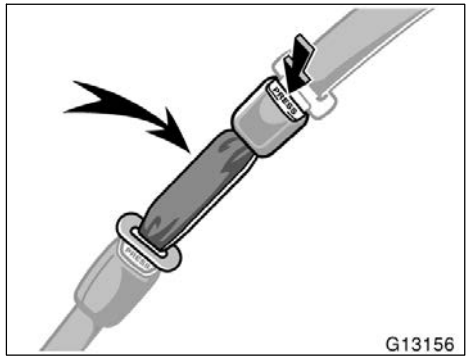

To connect the extender to the seat belt, insert the tab into the seat belt buckle so that the "PRESS" signs on the buckle-release buttons of the extender and the seat belt are both facing outward as shown.

You will hear a click when the tab locks into the buckle.

When releasing the seat belt, press on the buckle-release button on the extender, not on the seat belt. This helps prevent damage to the vehicle interior and extender itself.

When not in use, remove the extender and store in the vehicle for future use.

CAUTION

- After inserting the tab, make sure the tab and buckle are locked and that the seat belt extender is not twisted.
- Do not insert coins, clips, etc. in the buckle as this may prevent you from properly latching the tab and buckle.
- If the seat belt does not function normally, immediately contact your Toyota dealer. Do not use the seat until the seat belt is fixed. It cannot protect an adult occupant or your child from injury.

—Front seat belt pretensioners

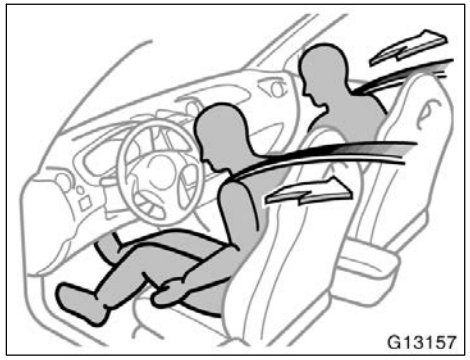

The driver and front passenger’s seat belt pretensioners are designed to be activated in response to a severe frontal impact.

When the airbag sensor detects the shock of a severe frontal impact, the front seat belts are quickly drawn back in by the retractors so that the belts snugly restrain the front seat occupants.

The front seat belt pretensioners are activated even with no passenger in the front seat.

Collisions occurring at certain speeds and angles may cause the front seat belt pretensioners and SRS airbags not to operate all together.

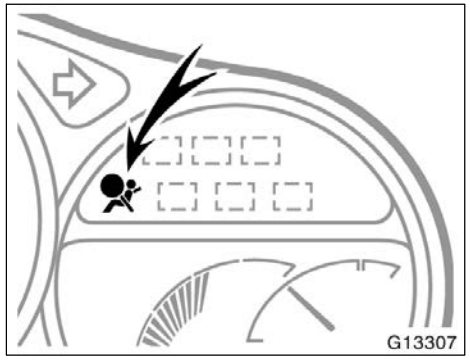

This indicator comes on when the ignition key is turned to the “ON” position. It goes off after about 6 seconds. This means the front seat belt pretensioners are operating properly.

This warning light system monitors the airbag sensor assembly, front airbag sensors, side airbag sensors, door side airbag sensors, front seat belt pretensioner assemblies, inflators, warning light, interconnecting wiring and power sources. (For details, see “Service reminder indicators and warning buzzers” in Section 1-5.)

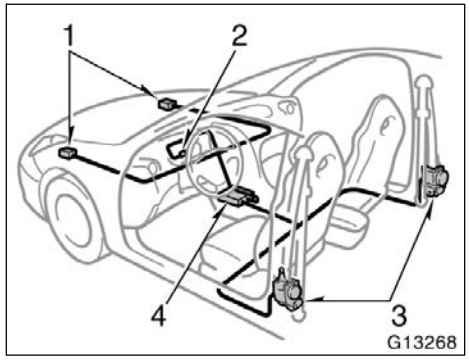

The front seat belt pretensioner system mainly consists of the following components and their locations are shown in the illustration.

1. Front airbag sensors
2. SRS warning light
3. Front seat belt pretensioner assemblies
4. Airbag sensor assembly

The front seat belt pretensioners are controlled by the airbag sensor assembly. The airbag sensor assembly consists of a safing sensor and airbag sensor.

When the front seat belt pretensioners are activated, an operating noise may be heard and a small amount of smoke-like gas may be released. This gas is harmless and does not indicate that a fire is occurring.

Once the front seat belt pretensioners have been activated, the seat belt retractors remain locked.

⚠ CAUTION

Do not modify, remove, strike or open the front seat belt pretensioner assemblies, airbag sensor or surrounding area or wiring. Doing any of these may cause sudden operation of the front seat belt pretensioners or disable the system, which could result in death or serious injury.

Failure to follow these instructions can result in death or serious injuries.

NOTICE

Do not perform any of the following changes without consulting your Toyota dealer. Such changes can interfere with proper operation of the front seat belt pretensioners in some cases.

- Installation of electronic devices such as a mobile two-way radio, cassette tape player or compact disc player
- Repairs on or near the front seat belt retractor assemblies
- Modification of the suspension system
- Modification of the front end structure
- Attachment of a grille guard (bull bar, kangaroo bar, etc.), snowplow, winches or any other equipment to the front end
- Repairs made on or near the front fenders, front end structure or console

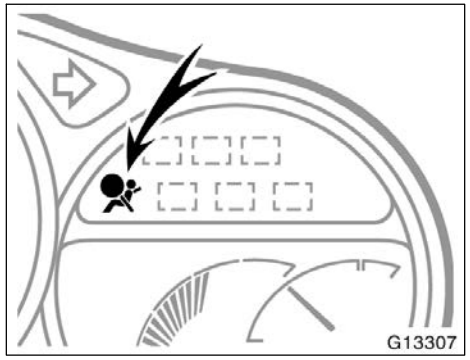

This front seat belt pretensioner system has a service reminder indicator to inform the driver of operating problems. If any of the following conditions occurs, this indicates a malfunction of the airbags or pretensioners. Contact your Toyota dealer as soon as possible to service the vehicle.

- The light does not come on when the ignition key is turned to the “ON” position, or the light remains on.
- The light comes on or flashes while driving.
- If either front seat belt does not retract or cannot be pulled out due to a malfunction or activation of the relevant front seat belt pretensioner.

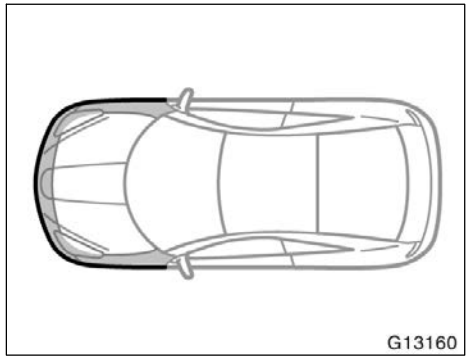

In the following cases, contact your Toyota dealer as soon as possible:

- The front part of the vehicle (shaded in the illustration) was involved in an accident that was not severe enough to cause the front seat belt pretensioners to operate.
- Either front seat belt pretensioner assembly or surrounding area is scratched, cracked, or otherwise damaged.

SRS driver and front passenger airbags

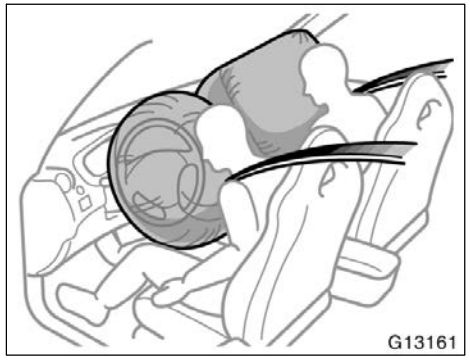

The SRS (Supplemental Restraint System) front airbags are designed to provide further protection for the driver and front passenger in addition to the primary safety protection provided by the seat belts.

In response to a severe frontal impact, the SRS front airbags work together with the seat belts to help reduce injury by inflating. The SRS front airbags help to reduce injuries mainly to the driver’s or front passenger’s head or chest caused by directly hitting the steering wheel or dashboard. The front passenger airbag is activated even with no passenger in the front seat.

Be sure to wear your seat belt properly.

Your vehicle is equipped with a crash sensing and diagnostic module, which will record the use of the seat belt restraint system by the driver when the SRS airbags are inflated.

⚠ CAUTION

A driver or front passenger too close to the steering wheel or dashboard during airbag deployment can be killed or seriously injured. Toyota strongly recommends that:

- The driver sit as far back as possible from the steering wheel while still maintaining control of the vehicle.
- The front passenger sit as far back as possible from the dashboard.
- All vehicle occupants be properly restrained using the available seat belts.

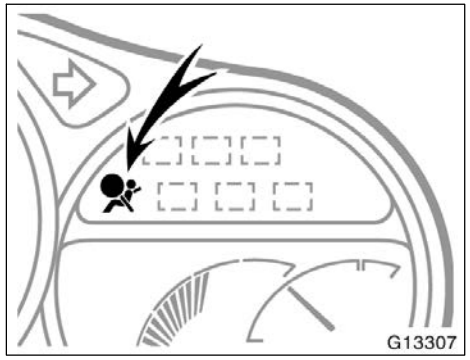

This indicator comes on when the ignition key is turned to the “ON” position. It goes off after about 6 seconds. This means the SRS front airbags are operating properly.

This warning light system monitors the airbag sensor assembly, front airbag sensors, side airbag sensors, door side airbag sensors, front seat belt pretensioner assemblies, inflators, warning light, interconnecting wiring and power sources. (For details, see “Service remainder indicators and warning buzzers” in Section 1-5.)

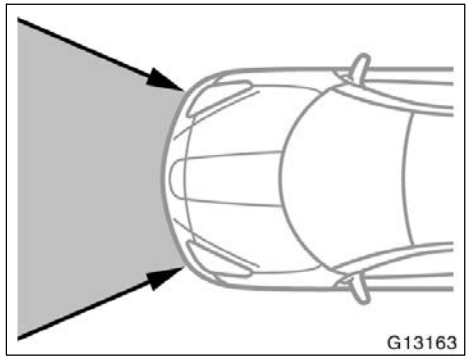

The SRS front airbag system is designed to activate in response to a severe frontal impact within the shaded area between the arrows in the illustration.

The SRS front airbags will deploy if the severity of the impact is above the designed threshold level, comparable to an approximate 25 km/h (15 mph) collision when impacting straight into a fixed barrier that does not move or deform.

If the severity of the impact is below the above threshold level, the SRS front airbags may not deploy.

However, this threshold velocity will be considerably higher if the vehicle strikes an object, such as a parked vehicle or sign pole, which can move or deform on impact, or if it is involved in an underride collision (e.g. a collision in which the nose of the vehicle “underrides”, or goes under, the bed of a truck, etc.).

It is possible that in some collisions at the lower zone of airbag sensor detection and activation the SRS airbags and seat belt pretensioners will not operate all together.

For the safety of all occupants, always wear your seat belts properly.

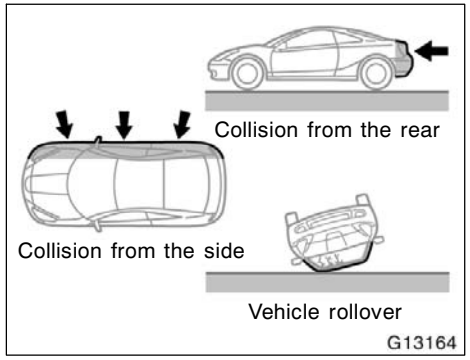

The SRS front airbags are not designed to inflate if the vehicle is involved in a side or rear collision, if it rolls over, or if it is involved in a low-speed frontal collision.

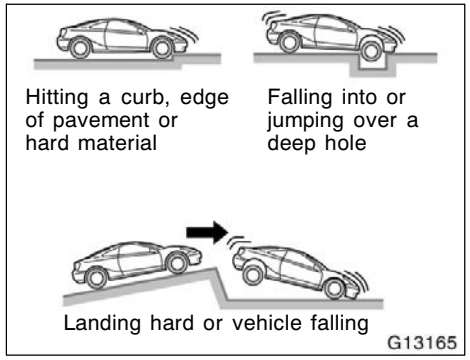

The SRS front airbags may deploy if a serious impact occurs to the underside of your vehicle. Some examples are shown in the illustration.

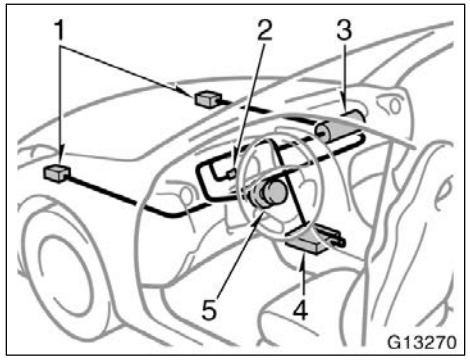

The SRS airbag system consists mainly of the following components, and their locations are shown in the illustration.

1. Front airbag sensors
2. SRS warning light
3. Airbag module for front passenger (airbag and inflator)
4. Airbag sensor assembly
5. Airbag module for driver (airbag and inflator)

The airbag sensor assembly consists of a safing sensor and airbag sensor.

In a severe frontal impact, the sensors detect deceleration and the system triggers the airbag inflators. Then a chemical reaction in the inflators quickly fills the airbags with non-toxic gas to help restrain the forward motion of the occupants.

When the airbags inflate, they produce a fairly loud noise and release some smoke and residue along with non-toxic gas. This does not indicate a fire. This gas is normally harmless; however, for those who have delicate skin, it may cause a minor skin irritation. Be sure to wash off any residue as soon as possible to prevent any potential skin irritation.

Deployment of the airbags happens in a fraction of a second, so the airbags must inflate with considerable force. While the system is designed to reduce serious injuries, it may also cause minor burns or abrasions and swelling.

Parts of the airbag module (steering wheel hub, dashboard) may be hot for several minutes, but the airbags themselves will not be hot. The airbags are designed to inflate only once.

A crash severe enough to inflate the airbags may break the windshield as the vehicle buckles. In vehicles with a passenger airbag the windshield may also be damaged by absorbing some of the force of the inflating airbag.

CAUTION

- The SRS airbag system is designed only as a supplement to the primary protection of the driver side and front passenger side seat belt systems. The front seat occupants can be killed or seriously injured by the inflating airbags if they do not wear the available seat belts properly. During sudden braking just before a collision, an unrestrained driver or front passenger can move forward into direct contact with or close proximity to the airbag which may then deploy during the collision. To ensure maximum protection in an accident, the driver and all passengers in the vehicle must wear their seat belts properly. Wearing a seat belt properly during an accident reduces the chances of death or serious injury or being thrown out of the vehicle. For instructions and precautions concerning the seat belt system, see “Seat belts” in this section.

- Improperly seated and/or restrained infants and children can be killed or seriously injured by the deploying front airbags. An infant or child who is too small to use a seat belt should be properly secured using a child restraint system. Toyota strongly recommends that all infants and children be placed in the rear seat of the vehicle and properly restrained. The rear seat is the safest for infants and children. For instructions concerning the installation of a child restraint system, see “Child restraint” in this section.

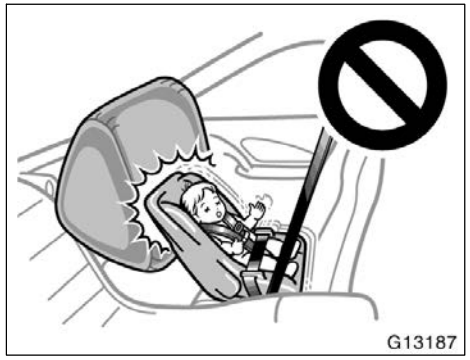

- Never put a rear-facing child restraint system on the front passenger seat because the force of the rapid inflation of the front passenger airbag can cause death or serious injury to the child.

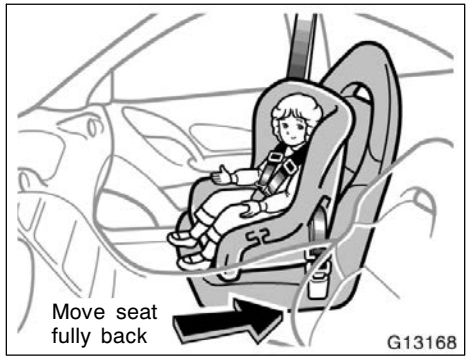

- A forward-facing child restraint system should be allowed to be put on the front seat only when it is unavoidable. Always move the seat as far back as possible, because the force of the deploying front airbag could cause death or serious injury to the child.
- On vehicles with side airbags, do not allow the child to lean against the front door or around the front door even if the child is seated in the child restraint system. It is dangerous if the side airbag inflates, and the impact could cause death or serious injury to the child.

- For instructions concerning the installation of a child restraint system, see “Child restraint” in this section.

- Do not sit on the edge of the seat or lean over the dashboard when the vehicle is in use. The front airbags inflate with considerable speed and force; you may be killed or seriously injured. Sit up straight and well back in the seat, and always use your seat belt properly.

- Do not allow a child to stand up, or to kneel on the front passenger seat. The front airbag inflates with considerable speed and force; the child may be killed or seriously injured.
- Do not hold a child on your lap or in your arms. Use a child restraint system in the rear seat. For instructions concerning the installation of a child restraint system, see “Child restraint” in this section.

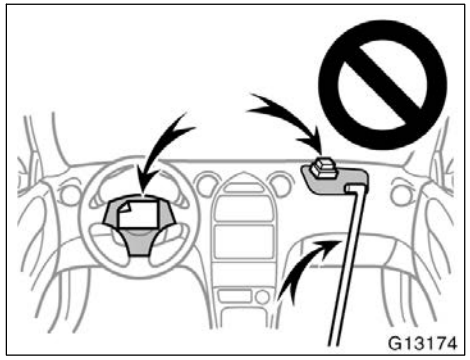

- Do not put objects or your pets on or in front of the dashboard or steering wheel pad that houses the front airbag system. They might restrict inflation or cause death or serious injury as they are projected rearward by the force of deploying airbags. Likewise, the driver and front passenger should not hold things in their arms or on their knees.

- Do not modify or remove any wiring. Do not modify, remove, strike or open any components such as the steering wheel pad, steering wheel, column cover, front passenger airbag cover, front passenger airbag or airbag sensor assembly. Doing any of these may cause sudden SRS front airbag inflation or disable the system, which could result in death or serious injury.

Failure to follow these instructions can result in death or serious injury.

NOTICE

Do not perform any of the following changes without consulting your Toyota dealer. Such changes can interfere with proper operation of the SRS front airbag system in some cases.

- Installation of electronic devices such as a mobile two-way radio, cassette tape player or compact disc player
- Modification of the suspension system
- Modification of the front end structure
- Attachment of a grille guard (bull bar, kangaroo bar, etc.), snowplow, winches or any other equipment to the front end
- Repairs made on or near the front fenders, front end structure, console, steering column, steering wheel or dashboard near the front passenger airbag

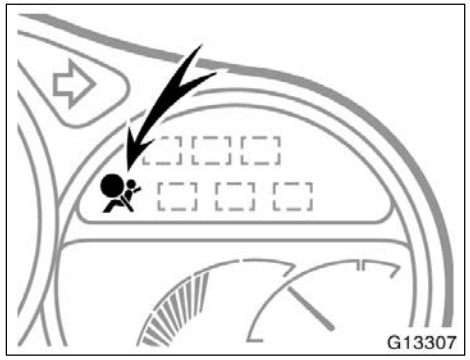

This SRS front airbag system has a service reminder indicator to inform the driver of operating problems. If either of the following conditions occurs, this indicates a malfunction of the airbags. Contact your Toyota dealer as soon as possible to service the vehicle.

- The light does not come on when the ignition key is turned to the “ON” position, or the light remains on.
- The light comes on or flashes while driving.

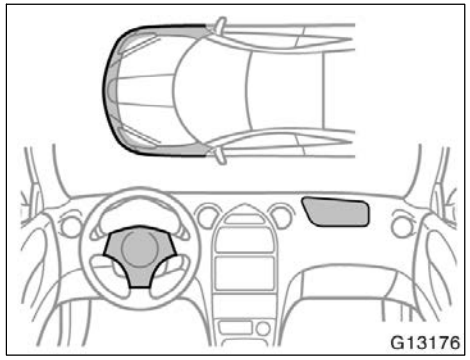

In the following cases, contact your Toyota dealer as soon as possible:

- The SRS front airbags have been inflated.
- The front part of the vehicle (shaded in the illustration) was involved in an accident that was not severe enough to cause the SRS front airbags to inflate.
- The pad section of the steering wheel or front passenger airbag cover (shaded in the illustration) is scratched, cracked, or otherwise damaged.

NOTICE

Do not disconnect the battery cables before contacting your Toyota dealer.

SRS side airbags

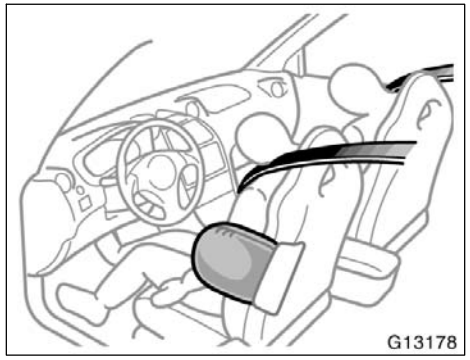

The SRS (Supplemental Restraint System) side airbags are designed to provide further protection for the driver and front passenger in addition to the primary safety protection provided by the seat belts.

In response to a severe side impact, the SRS side airbags work together with the seat belts to help reduce injury by inflating. The SRS side airbags help to reduce injuries mainly to the driver’s or front passenger’s chest. The SRS side airbag on the passenger seat is activated even with no passenger in the front seat.

Be sure to wear your seat belt properly.

Your vehicle is equipped with a crash sensing and diagnostic module, which will record the use of the seat belt restraint system by the driver when the SRS side airbags are inflated.

⚠ CAUTION

SRS side airbags inflate with considerable force. To avoid potential death or serious injury when they inflate, the driver and front passenger must:

- Wear their seat belts properly.
- Remain properly seated with their back upright and against the seat at all times.

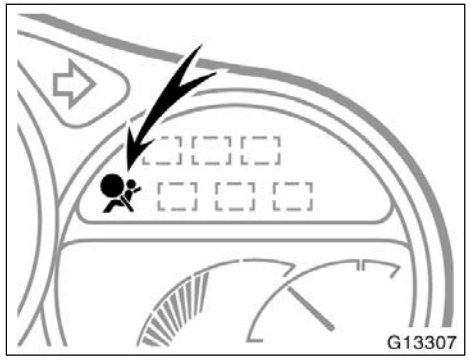

This indicator comes on when the ignition key is turned to the “ON” position. It goes off after about 6 seconds. This means the SRS side airbags are operating properly.

This warning light system monitors the airbag sensor assembly, front airbag sensors, side airbag sensors, door side airbag sensors, front seat belt pretensioner assemblies, inflators, warning light, interconnecting wiring and power sources. (For details, see “Service reminder indicators and warning buzzers” in Section 1-5.)

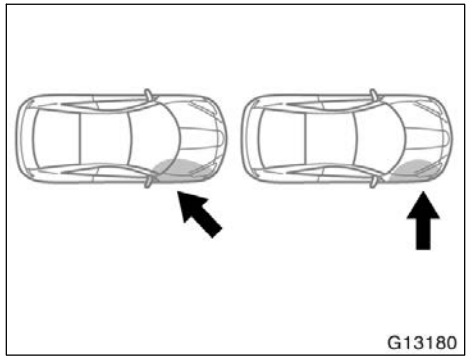

The SRS side airbag system may not activate if the vehicle is subjected to a collision from the side at certain angles, or a collision to the side of the vehicle body other than the passenger compartment as shown in the illustration.

The SRS side airbags are designed to inflate when the passenger compartment area suffers a severe impact from the side.

For the safety of all occupants, always wear your seat belts properly.

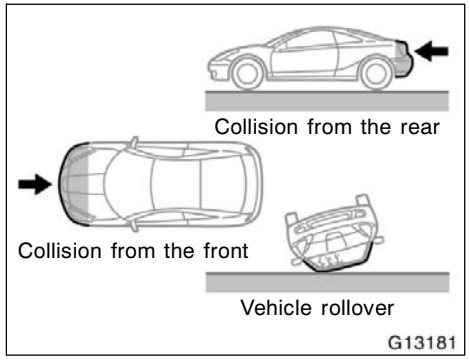

The SRS side airbags are not designed to inflate if the vehicle is involved in a front or rear collision, if it rolls over, or if it is involved in a low-speed side collision.

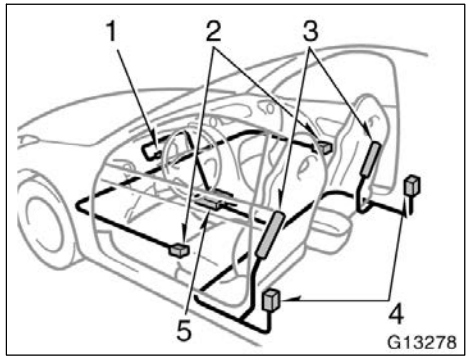

The SRS side airbag system consists mainly of the following components, and their locations are shown in the illustration.

1. SRS warning light
2. Door side airbag sensors
3. Side airbag modules (airbag and inflator)
4. Side airbag sensors
5. Airbag sensor assembly

The SRS side airbag system is controlled by the airbag sensor assembly. The airbag sensor assembly consists of a safing sensor and airbag sensor.

In a severe side impact, the side airbag sensor triggers the side airbag inflators. Then a chemical reaction in the inflators quickly fills the airbags with non-toxic gas to help restrain the lateral motion of the occupants.

When the airbags inflate, they produce a fairly loud noise and release some smoke and residue along with non-toxic gas. This does not indicate a fire. This gas is normally harmless; however, for those who have delicate skin, it may cause a minor skin irritation. Be sure to wash off any residue as soon as possible to prevent any potential skin irritation.

Deployment of the airbags happens in a fraction of a second, so the airbags must inflate with considerable force. While the system is designed to reduce serious injuries, it may also cause minor burns or abrasions and swelling.

Front seats may be hot for several minutes, but the airbags themselves will not be hot. The airbags are designed to inflate only once.

CAUTION

- The SRS side airbag system is designed only as a supplement to the primary protection of the driver side and front passenger side seat belt systems. To ensure maximum protection in an accident, the driver and all passengers in the vehicle must wear their seat belts properly. Wearing a seat belt properly during an accident reduces the chances of death or serious injury or being thrown out of the vehicle. For instructions and precautions concerning the seat belt system, see “Seat belts” in this section.

- Improperly seated and/or restrained infants and children can be killed or seriously injured by the deploying airbags. An infant or child who is too small to use a seat belt should be properly secured using a child restraint system. Toyota strongly recommends that all infants and children be placed in the rear seat of the vehicle and properly restrained. The rear seat is the safest for infants and children. For instructions concerning the installation of a child restraint system, see “Child restraint” in this section.
- Do not allow a child to lean his/her head or any part of his/her body against the front door or the area of the seat from which the side airbag deploys even if he/she is seated in the child restraint system. It is dangerous if the side airbag inflates, and the impact could cause death or serious injury to the child. For instructions concerning the installation of a child restraint system, see “Child restraint” in this section.

- Do not lean against the front door when the vehicle is in use. The side airbag inflates with considerable speed and force; you may be killed or seriously injured.
- Do not apply excessive weight to the outer side of the front seats on vehicles with side airbags.

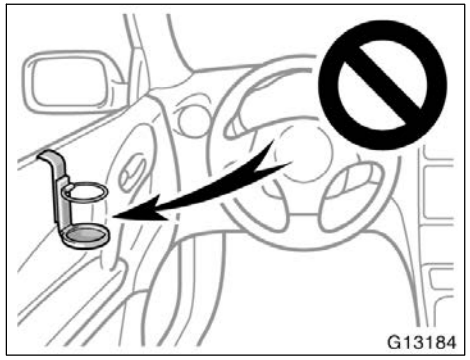

- Do not attach a cup holder or any other device or object on or around the door. When the side airbag inflates, the cup holder or any other device or object will be thrown with great force or the side airbag may not activate correctly, resulting in death or serious injury. Likewise, the driver and front passenger should not hold things in their arms or on their knees.

- Do not use accessories for the seats which cover the parts where the side airbags inflate. Such accessories may prevent the side airbags from activating correctly, causing death or serious injury.
- Do not modify or replace the seats or upholstery of the front seats with the side airbags. Such changes may disable the system or cause the side airbags to inflate accidentally, resulting in death or serious injury. Consult your Toyota dealer if you consider modifications of this kind.

Failure to follow these instructions can result in death or serious injury.

NOTICE

Do not perform any of the following changes without consulting your Toyota dealer. Such changes can interfere with proper operation of the SRS side airbag system in some cases.

- ◆Installation of electronic devices such as a mobile two-way radio, cassette tape player or compact disc player
- ◆Modification of the suspension system
- ◆Modification of the side structure of the passenger compartment
- ◆Repairs made on or near the console or front seat

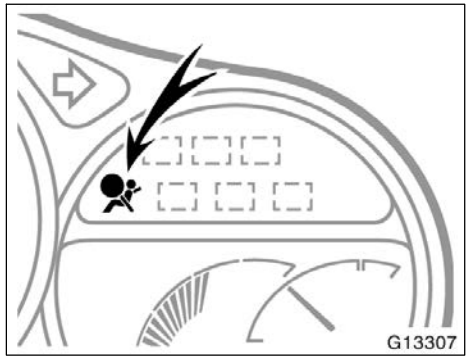

This SRS side airbag system has a service reminder indicator to inform the driver of operating problems. If either of the following conditions occurs, this indicates a malfunction of the airbags. Contact your Toyota dealer as soon as possible to service the vehicle.

- The light does not come on when the ignition key is turned to the “ON” position, or the light remains on.
- The light comes on or flashes while driving.

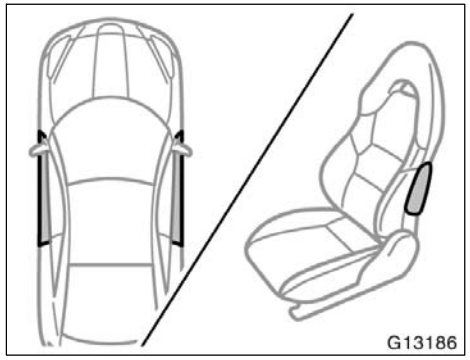

In the following cases, contact your Toyota dealer as soon as possible:

- The SRS side airbags have been inflated.
- The portion of the doors (shaded in the illustration) was involved in an accident that was not severe enough to cause the SRS side airbags to inflate.
- The surface of the seats with the side airbag (shaded in the illustration) is scratched, cracked, or otherwise damaged.

NOTICE

Do not disconnect the battery cables before contacting your Toyota dealer.

Child restraint—
—Child restraint precautions

Toyota strongly urges the use of child restraint systems for children small enough to use them.

The laws of all fifty states in the U.S.A. and Canada now require the use of a child restraint system.

Your vehicle conforms to SAEJ1819.

If a child is too large for a child restraint system, the child should sit in the rear seat and must be restrained using the vehicle’s seat belt. See “Seat belts” for details.

⚠ CAUTION

- For effective protection in automobile accidents and sudden stops, child must be properly restrained using a seat belt or child restraint system depending on the age and size of the child. Holding a child in your arms is not a substitute for a child restraint system. In an accident, the child can be crushed against the windshield, or between you and the vehicle’s interior.

- Toyota strongly urges use of a proper child restraint system which conforms to the size of the child, and is put on the rear seat. According to accident statistics, the child is safer when properly restrained in the rear seat than in the front seat.
- Never put a rear-facing child restraint system on the front seat. In the event of an accident, the force of the rapid inflation of the airbag can cause death or serious injury if a rear-facing child restraint system is put on the front seat.
- Unless it is unavoidable, do not put a child restraint system on the front seat.

- A forward-facing child restraint system should be allowed to be put on the front seat only when it is unavoidable. Always move the seat as far back as possible, because the force of the deploying airbag could cause death or serious injury to the child.
- On vehicles with side airbags, do not allow the child to lean against the front door or around the front door even if the child is seated in the child restraint system. It is dangerous if the side airbag inflates, and the impact could cause death or serious injury to the child.
- Make sure that you have complied with all installation instructions provided by the child restraint manufacturer and that the system is properly secured.

—Child restraint system

A child restraint system for a small child or baby must itself be properly restrained on the seat with the lap portion of the lap/shoulder belt. You must carefully consult the manufacturer’s instructions which accompany the child restraint system.

To provide proper restraint, use a child restraint system following the manufacturer’s instructions about the appropriate age and size of the child for the restraint system.

Install the child restraint system correctly following the instructions provided by its manufacturer. General directions are also provided under the following illustrations.

The child restraint system should be installed on the rear seat. According to accident statistics, the child is safer when properly restrained in the rear seat than in the front seat.

⚠ CAUTION

- Never put a rear-facing child restraint system on the front seat. In the event of an accident, the force of the rapid inflation of the airbag can cause death or serious injury if a rear-facing child restraint system is put on the front seat.
- Unless it is unavoidable, do not put a child restraint system on the front seat.
- A forward-facing child restraint system should be allowed to be put on the front seat only when it is unavoidable. Always move the seat as far back as possible, because the force of the deploying airbag could cause death or serious injury to the child.
- On vehicles with side airbags, do not allow the child to lean against the front door or around the front door even if the child is seated in the child restraint system. It is dangerous if the side airbag inflates, and the impact could cause death or serious injury to the child.

- After installing the child restraint system, make sure it is secured in place following the manufacturer’s instructions. If it is not restrained securely, it may cause death or serious injury to the child in the event of a sudden stop or accident.

When not using the child restraint system, keep it secured with the seat belt or place it somewhere other than the passenger compartment. This will prevent it from injuring passengers in the event of a sudden stop or accident.

Your vehicle has anchors for securing the top strap of a child restraint system.

For instructions on how to use the anchor bracket, see “—Using a top strap” in this section.

—Types of child restraint system

Child restraint systems are divided into the following 3 types according to the child’s age and size.

(A) Infant seat

(B) Convertible seat

(C) Booster seat

Install the child restraint system following the instructions provided by its manufacturer.

(A) Infant seat

(B) Convertible seat

—Installation with 3-point type seat belt

(C) Booster seat

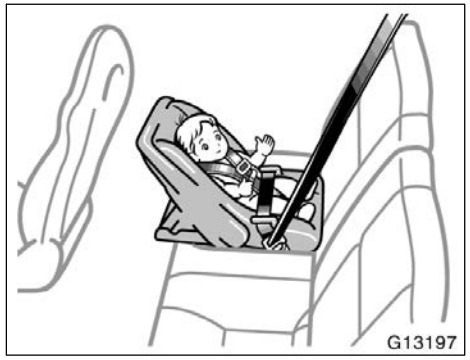

(A) INFANT SEAT INSTALLATION

An infant seat is used in rear-facing position only.

⚠ CAUTION

- Never put a rear-facing child restraint system on the front passenger seat because the force of the rapid inflation of the front passenger airbag can cause death or serious injury to the child.

- Do not put a rear-facing child restraint system on the rear seat if it interferes with the lock mechanism of the front seats. This can cause severe injury to the child and front passenger in case of sudden braking or a collision.
- If your driving position is not satisfactory, install the child restraint system at another position.

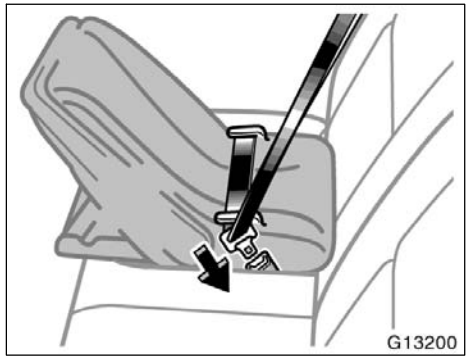

1. Run the lap and shoulder belt through or around the infant seat following the instructions provided by its manufacturer and insert the tab into the buckle taking care not to twist the belt. Keep the lap portion of the belt tight.

CAUTION

- After inserting the tab, make sure the tab and buckle are locked and that the lap and shoulder portions of the belt is not twisted.
- Do not insert coins, clips, etc. in the buckle as this can prevent you from properly latching the tab and buckle.
- If the seat belt does not function normally, it cannot protect your child from injury. Contact your Toyota dealer immediately. Do not use the seat until the seat belt is fixed.

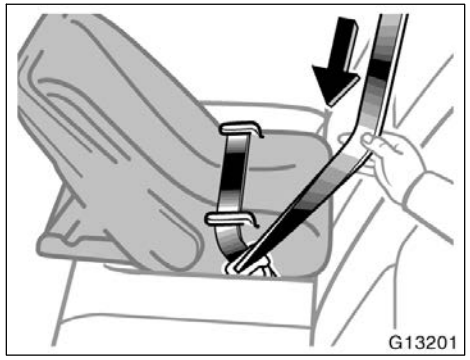

2. Fully extend the shoulder belt to put it in the lock mode. When the belt is then retracted even slightly, it cannot be extended.

To hold the infant seat securely, make sure the belt is in the lock mode before letting the belt retract.

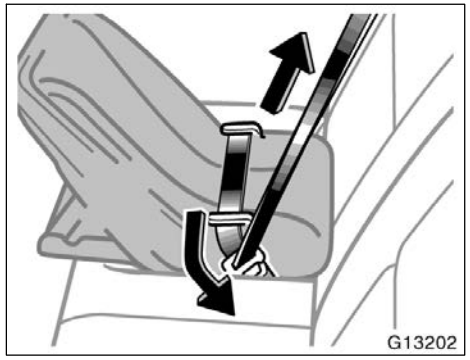

3. While pressing the infant seat firmly against the seat cushion and seatback, let the shoulder belt retract as far as it will go to hold the infant seat securely.

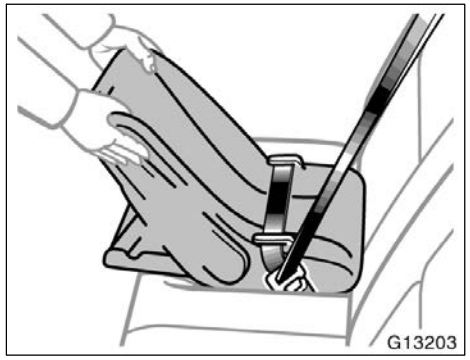

⚠ CAUTION

Push and pull the child restraint system in different directions to be sure it is secure. Follow all the installation instructions provided by its manufacturer.

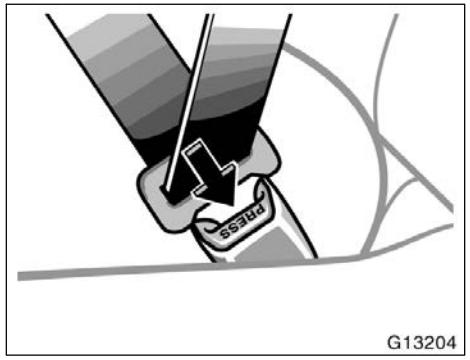

4. To remove the infant seat, press the buckle-release button and allow the belt to retract completely. The belt will move freely again and be ready to work for an adult or older child passenger.

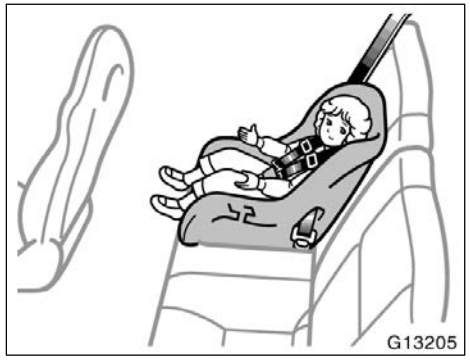

(B) CONVERTIBLE SEAT INSTALLATION

A convertible seat is used in forward-facing or rear-facing position depending on the child’s age and size. When installing, follow the manufacturer’s instruction about the applicable child’s age and size as well as directions for installing the child restraint system.

⚠ CAUTION

- Never put a rear-facing child restraint system on the front passenger seat because the force of the rapid inflation of the front passenger airbag can cause death or serious injury to the child.

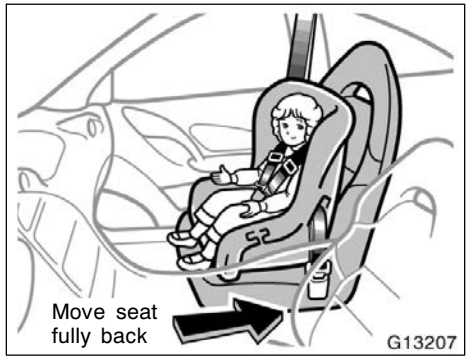

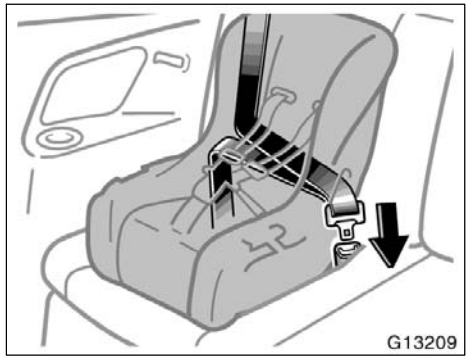

- A forward-facing child restraint system should be allowed to be put on the front seat only when it is unavoidable. Always move the seat as far back as possible, because the force of the deploying airbag could cause death or serious injury to the child.
- On vehicles with side airbags, do not allow the child to lean against the front door or around the front door even if the child is seated in the child restraint system. It is dangerous if the side airbag inflates, and the impact could cause death or serious injury to the child.

- Do not put a rear-facing child restraint system on the rear seat if it interferes with the lock mechanism of the front seats. This can cause severe injury to the child and front passenger in case of sudden braking or a collision.
- If your driving position is not satisfactory, install the child restraint system at another position.

1. Run the lap and shoulder belt through or around the convertible seat following the instructions provided by its manufacturer and insert the tab into the buckle taking care not to twist the belt. Keep the lap portion of the belt tight.

⚠ CAUTION

- After inserting the tab, make sure the tab and buckle are locked and that the lap and shoulder portions of the belt is not twisted.
- Do not insert coins, clips, etc. in the buckle as this may prevent you from properly latching the tab and buckle.
- If the seat belt does not function normally, it cannot protect your child from injury. Contact your Toyota dealer immediately. Do not use the seat until the seat belt is fixed.

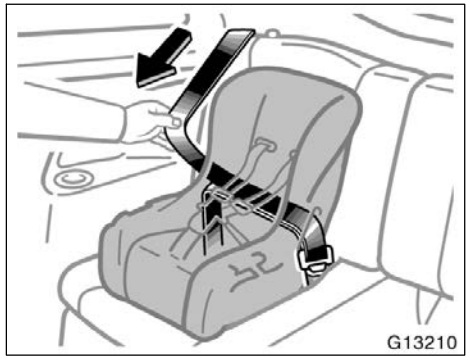

2. Fully extend the shoulder belt to put it in the lock mode. When the belt is then retracted slightly, it cannot be extended.

To hold the convertible seat securely, make sure the belt is in the lock mode before letting the belt retract.

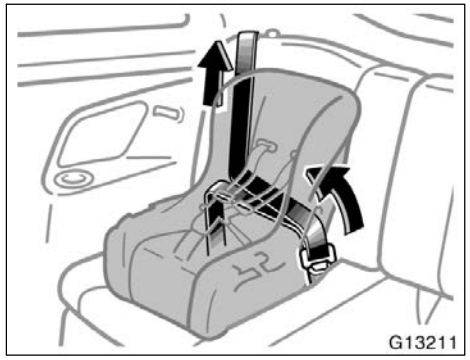

3. While pressing the convertible seat firmly against the seat cushion and seatback, let the shoulder belt retract as far as it will go to hold the convertible seat securely.

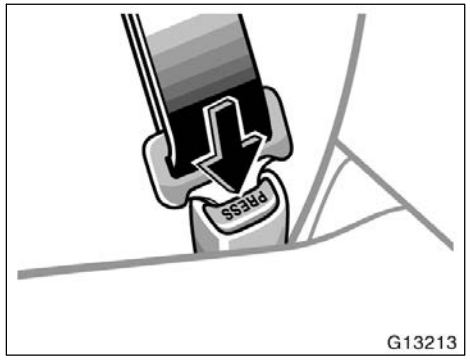

⚠ CAUTION

Push and pull the child restraint system in different directions to be sure it is secure. Follow all the installation instructions provided by its manufacturer.

4. To remove the convertible seat, press the buckle-release button and allow the belt to retract completely. The belt will move freely again and be ready to work for an adult or older child passenger.

(C) BOOSTER SEAT INSTALLATION

A booster seat is used in forward-facing position only.

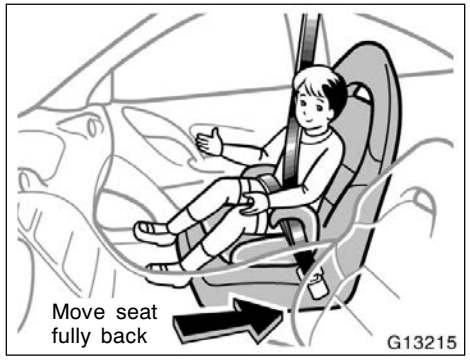

⚠ CAUTION

- A forward-facing child restraint system should be allowed to be put on the front seat only when it is unavoidable. Always move the seat as far back as possible, because the force of the deploying airbag could cause death or serious injury to the child.
- On vehicles with side airbags, do not allow the child to lean against the front door or around the front door even if the child is seated in the child restraint system. It is dangerous if the side airbag inflates, and the impact could cause death or serious injury to the child.

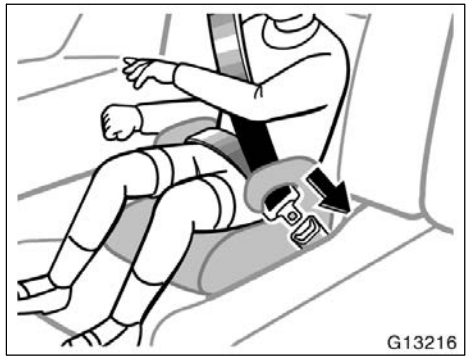

1. Sit the child on a booster seat. Run the lap and shoulder belt through or around the booster seat and child following the instructions provided by its manufacturer and insert the tab into the buckle taking care not to twist the belt.

Make sure the shoulder belt is correctly across the child’s shoulder and that the lap belt is positioned as low as possible on child’s hips. See “Seat belts” for details.

⚠ CAUTION

- Always make sure the shoulder belt is positioned across the center of child’s shoulder. The belt should be kept away from child’s neck, but not falling off child’s shoulder. Failure to do so could reduce the amount of protection in an accident and increase the chance of injury.
- Both high-positioned lap belts and loose-fitting belts could cause serious injuries due to sliding under the lap belt during a collision or other unintended result. Keep the lap belt positioned as low on a child’s hips as possible.
- For child’s safety, do not place the shoulder belt under child’s arm.
- After inserting the tab, make sure the tab and buckle are locked and that the lap and shoulder portions of the belt are not twisted.
- Do not insert coins, clips, etc. in the buckle as this may prevent you from properly latching the tab and buckle.

- If the seat belt does not function normally, it cannot protect your child from injury. Contact your Toyota dealer immediately. Do not use the seat until the seat belt is fixed.

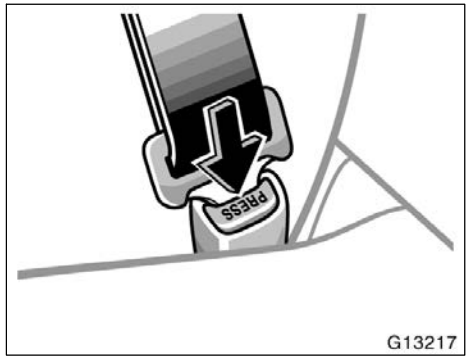

2. To remove the child restraint system, press the buckle-release button and allow the belt to retract.

—Using a top strap

Follow the procedure below for a child restraint system that requires the use of a top strap.

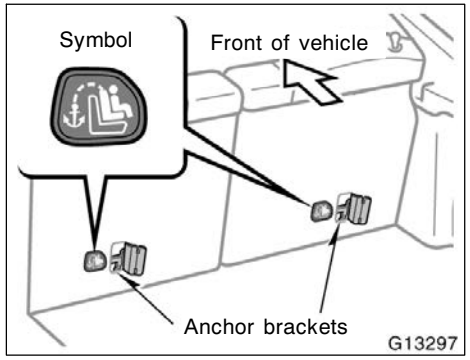

Use the anchor bracket on the rear of the seat back to attach the top strap.

Anchor brackets are installed for each rear seat.

This symbol indicates the locations of anchor brackets.

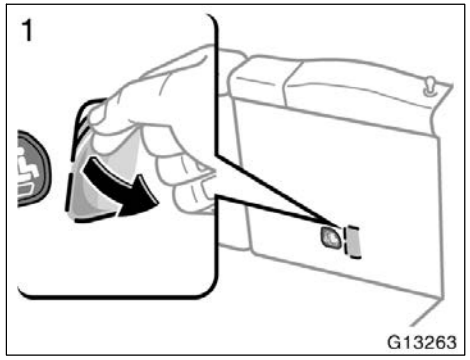

TO USE THE ANCHOR BRACKET:

1. Find the label on the rear of the seat back carpet. Tear the slit next to the label by hand.

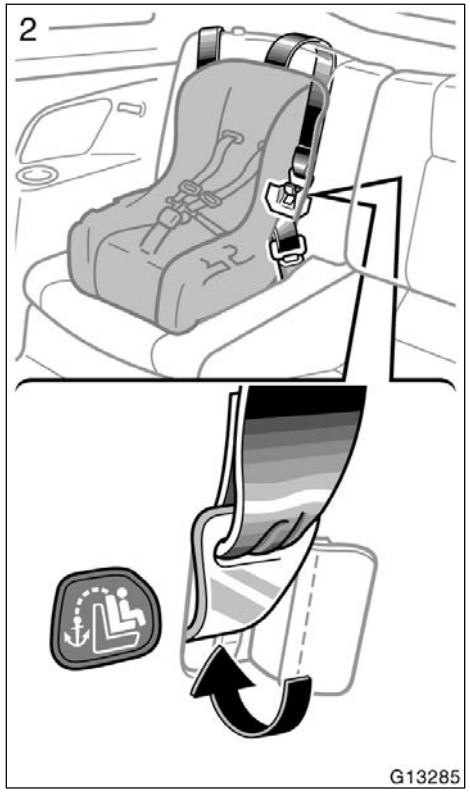

2. Fix the child restraint system with the seat belt.

   Latch the hook onto the exposed anchor bracket and tighten the top strap.

For instructions to install the child restraint system, see “Child restraint” in this section.

⚠ CAUTION

Make sure the top strap is securely latched, and check that the child restraint system is secure by pushing and pulling it in different directions.

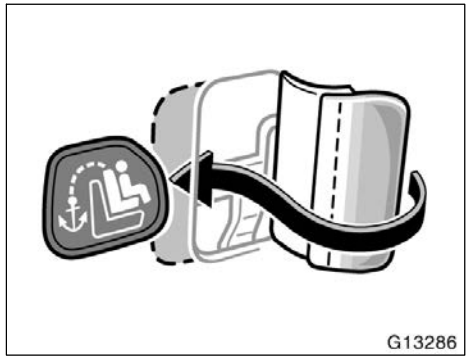

Slide the back-plate of the flap under the carpet to cover the anchor bracket when it is not in use.

Tilt steering wheel

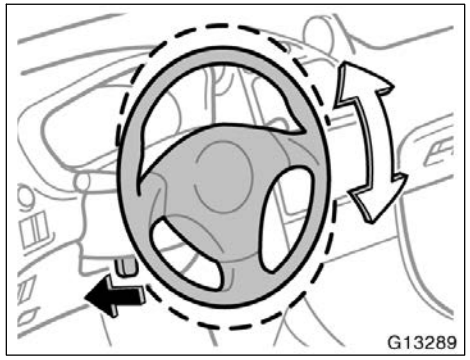

To change the steering wheel angle, hold the steering wheel, push the lock release lever, tilt the steering wheel to the desired angle and return the lever to its original position.

CAUTION

- Do not adjust the steering wheel while the vehicle is moving. It may cause the driver to mishandle the vehicle and an accident may occur resulting in death or serious injuries.
- After adjusting the steering wheel, try moving it up and down to make sure it is locked in position.

Outside rear view mirrors—

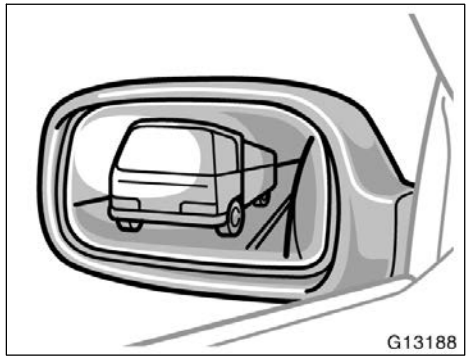

Adjust the mirror so that you can see the side of your vehicle in the mirror.

Be careful when judging the size or distance of any object seen in the outside rear view mirror on the passenger's side. It is a convex mirror with a curved surface. Any object seen in a convex mirror will look smaller and farther away than when seen in a flat mirror.

CAUTION

Do not adjust the mirror while the vehicle is moving. It may cause the driver to mishandle the vehicle and an accident may occur resulting in death or serious injuries.

—Power rear view mirror control

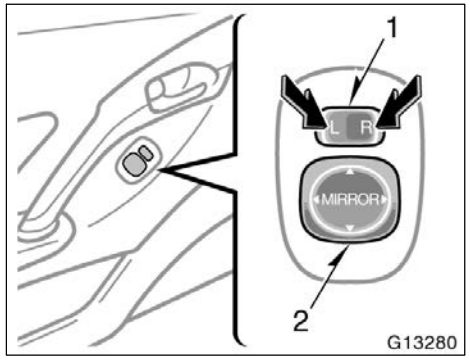

To adjust a mirror, use the switches.

1. Master switch—To select the mirror to be adjusted
   Push the "L" (left) or "R" (right) switch.
2. Control switch—To move the mirror
   Push the switch in the desired direction.

Mirror can be adjusted when key is in the "ACC" or "ON" position.

NOTICE

If ice should jam the mirror, do not operate the control or scrape the mirror face. Use a spray de-icer to free the mirror.

—Folding rear view mirrors

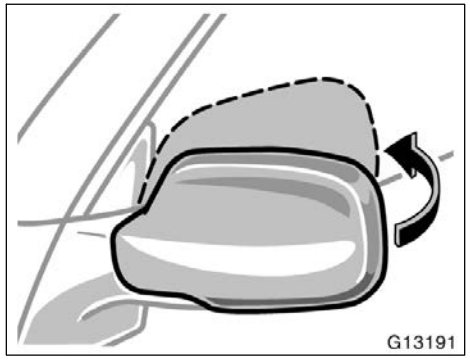

The rear view mirrors can be folded backward for parking in restricted areas.

To fold the rear view mirror, push backward.

⚠ CAUTION

Do not drive with the mirrors folded backward. Both the driver and passenger side rear view mirrors must be extended and properly adjusted before driving.

Anti-glare inside rear view mirror

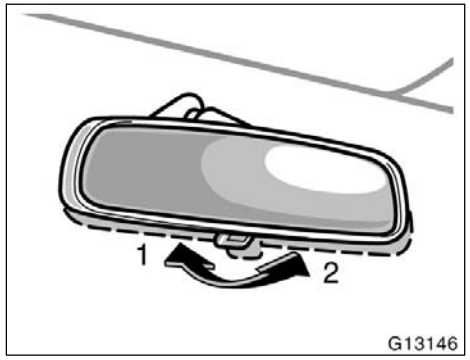

Adjust the mirror so that you can just see the rear of your vehicle in the mirror.

To reduce glare from the headlights of the vehicle behind you during night driving, operate the lever on the lower edge of the mirror.

Daylight driving—Lever at position 1

The reflection in the mirror has greater clarity at this position.

Night driving—Lever at position 2

Remember that by reducing glare you also lose some rear view clarity.

⚠ CAUTION

Do not adjust the mirror while the vehicle is moving. It may cause the driver to mishandle the vehicle and an accident may occur resulting in death or serious injuries.

Vanity mirrors

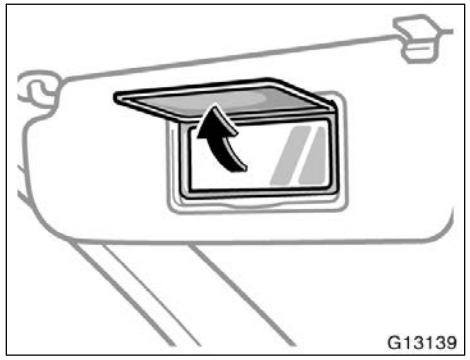

To use the vanity mirror, swing down the sun visor and open the cover.

SECTION 1 - 4

OPERATION OF INSTRUMENTS AND CONTROLS

Lights, Wipers and Defogger

Headlights and turn signals 66
Emergency flashers 68
Instrument panel light control 68
Front fog lights 69
Interior light 69
Luggage compartment light 70
Windshield wipers and washer 71
Rear window wiper and washer 71
Rear window defogger 72

Headlights and turn signals

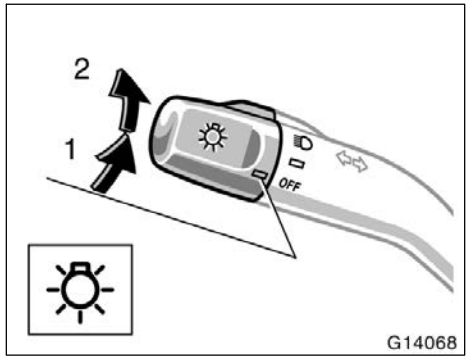

Type A

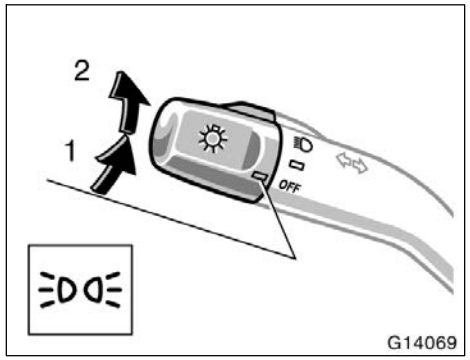

Type B

HEADLIGHTS

To turn on the following lights: Twist the headlight/turn signal lever knob.

Position 1—Parking, tail, license plate, side marker and instrument panel lights

Type B only—The tail light indicator (green light) on the instrument panel will tell you that the tail lights are on.

Position 2—Headlights and all of the above

Type A only—The head light low beam indicator light (green light) on the instrument panel will tell you that the low beams are on.

Light reminder buzzer

A buzzer will remind you to turn the lights off when the driver’s door is opened if you remove the key with the headlights left on.

NOTICE

To prevent the battery being discharged, do not leave the lights on for a long period when engine is not running.

Daytime running light system

The headlights turn on at reduced intensity when the parking brake is released with the engine started, even with the light switch in the “OFF” position or position 1. They will not go off until the ignition switch is turned off.

Twist the knob to the position 2 to turn to full intensity for driving at night.

The headlights automatically turn to full intensity in the twilight even with the light switch in the “OFF” position.

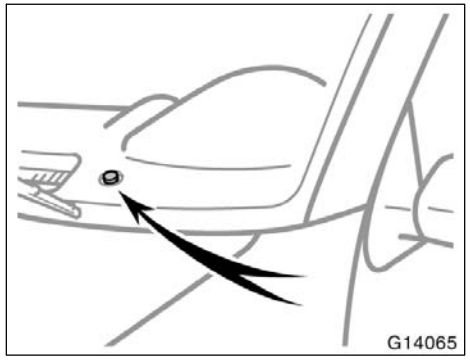

The daytime running light control sensor is on the top of the driver’s side instrument panel.

Do not place anything on the instrument panel, and/or do not affix anything on the windshield to block this sensor.

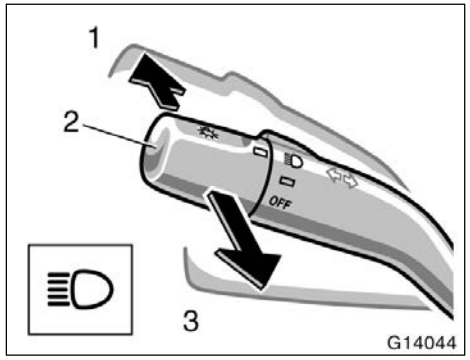

High-low beams—For high beams, turn the headlights on and push the lever away from you (position 1). Pull the lever toward you (position 2) for low beams.

The headlight high beam indicator light (blue light) on the instrument panel will tell you that the high beams are on.

Flashing the high beam headlights (position 3)—Pull the lever all the way back. The high beam headlights turn off when you release the lever.

You can flash the high beam headlights with the knob turned to “OFF”.

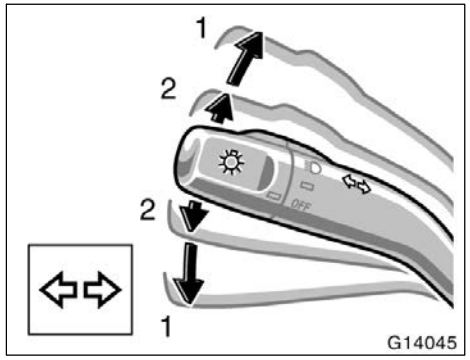

TURN SIGNALS

To signal a turn, push the headlight/turn signal lever up or down to position 1.

The key must be in the “ON” position.

The lever automatically returns after you make a turn, but you may have to return it by hand after you change lanes.

To signal a lane change, move the lever up or down to the pressure point (position 2) and hold it.

If the turn signal indicator lights (green lights) on the instrument panel flash faster than normal, a front or rear turn signal bulb is burned out.

Emergency flashers

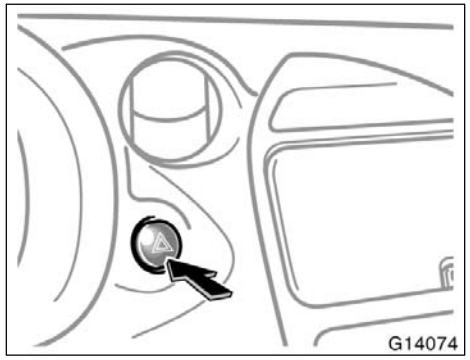

To turn on the emergency flashers, push the switch.

All the turn signal lights will flash. To turn them off, push the switch once again.

Turn on the emergency flashers to warn other drivers if your vehicle must be stopped where it might be a traffic hazard.

Always pull as far off the road as possible.

The turn signal light switch will not work when the emergency flashers are operating.

NOTICE

To prevent the battery from being discharged, do not leave the switch on longer than necessary when the engine is not running.

Instrument panel light control

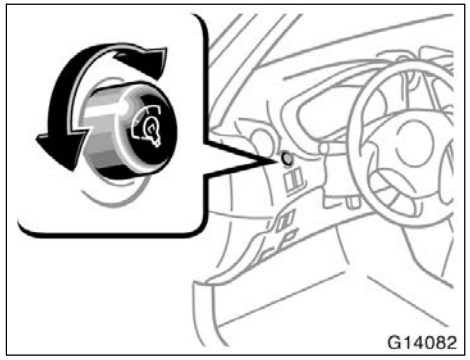

To adjust the brightness of the instrument panel lights, turn the knob.

Front fog lights

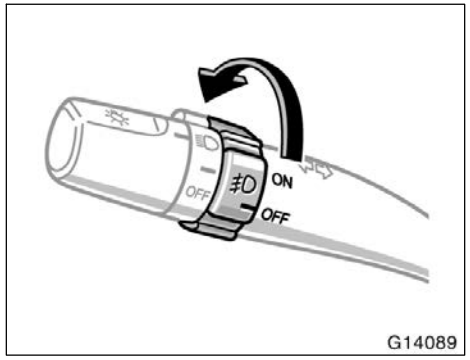

To turn on the front fog lights, twist the band of the headlight and turn signal switch lever. They will come on only when the headlights are on low beam.

Interior light (with moon roof)

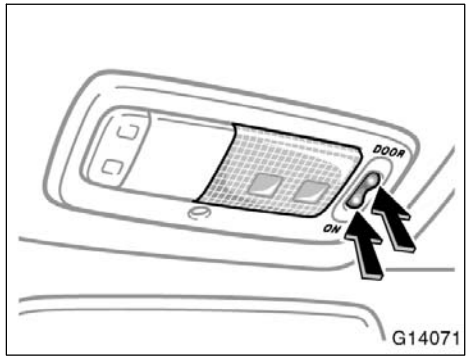

To turn the interior light on, push the “ON” or “DOOR” side switch. To turn the light off, push the switch lightly on the opposite side.

The interior light switch has the following positions:

“ON”—The light stays on all the time.

“DOOR”—Turns the light on when any of the side doors and back is opened. The light fades out when both side doors and back door are closed.

ILLUMINATED ENTRY SYSTEM
(vehicles with power door lock system)

With the switch in “DOOR” position, the light comes on when any of the side doors and back door is opened. After both side doors and back door are closed, the light remains on for about 15 seconds and fades out.

However, in the following cases, the light fades out immediately.

- Both side doors and back door are closed when the ignition key is in “ACC” or “ON” position.
- Both side doors and back door are closed and both side doors are locked.

When both side doors and back door are unlocked simultaneously with a key or wireless remote control transmitter, the interior light comes on for about 15 seconds and then fades out, even if the door is not opened.

To prevent the battery being discharged, the lights will automatically turn off when the key is removed and the door is left opened with the switch at “DOOR” position for 20 minutes or more.

Interior light (without moon roof)

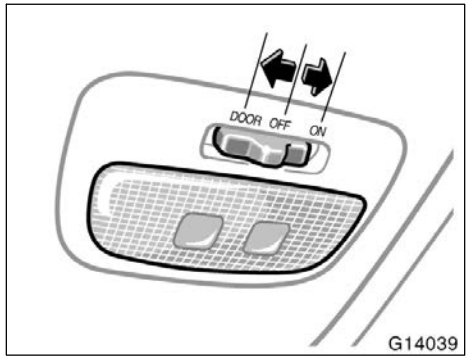

To turn on the interior light, slide the switch.

The interior light switch has the following positions:

“ON”—The light stays on all the time.

“OFF”—Turns the light off.

“DOOR”—Turns the light on when any of the side doors and back door is opened. The light fades out when both side doors and back door are closed.

ILLUMINATED ENTRY SYSTEM
(vehicles with power door lock system)

With the switch in “DOOR” position, the light comes on when any of the side doors and back door is opened. After both side doors and back door are closed, the light remains on for about 15 seconds and fades out.

However, in the following cases, the light fades out immediately.

- Both side doors and back door are closed when the ignition key is in “ACC” or “ON” position.
- Both side doors and back door are closed and both side doors are locked.

When both side doors and back door are unlocked simultaneously with a key or wireless remote control transmitter, the interior light comes on for about 15 seconds and then fades out, even if the door is not opened.

To prevent the battery being discharged, the lights will automatically turn off when the key is removed and the door is left opened with the switch at “DOOR” position for 20 minutes or more.

Luggage compartment light

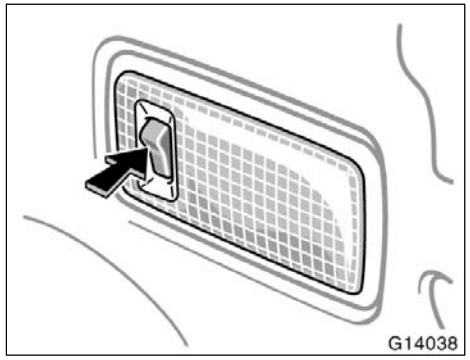

To turn the luggage compartment light on, open the back door and push the switch. Closing the back door will turn the light off.

Windshield wipers and washer

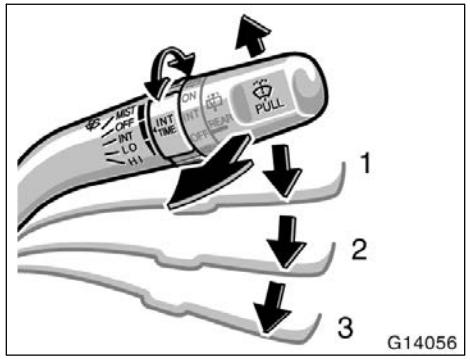

To turn on the windshield wipers, move the lever to the desired setting.

The key must be in the “ON” position.

Lever position	Speed setting
Position 1	Intermittent
Position 2	Slow
Position 3	Fast

For a single sweep of the windshield, push the lever up and release it.

With interval adjuster: The “INT TIME” band lets you adjust the wiping time interval when the wiper lever is in the intermittent position (position 1). Twist the band upward to increase the time between sweeps, and downward to decrease it.

To squirt washer fluid, pull the lever toward you.

If the windshield wipers are off, they will operate a couple of times after the washer squirts.

For instructions on adding washer fluid, see “Adding washer fluid” in Section 7-3.

In freezing weather, warm the windshield with the defroster before using the washer. This will help prevent the washer fluid from freezing on your windshield, which can block your vision.

NOTICE

Do not operate the wipers if the windshield is dry. It may scratch the glass.

Rear window wiper and washer

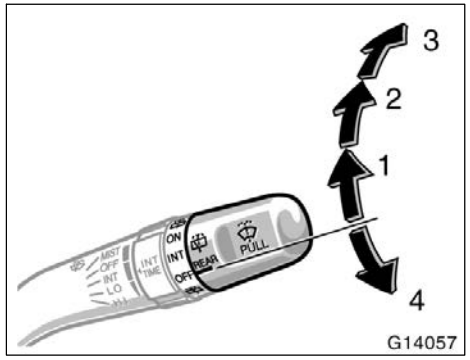

To turn on the rear window wiper, twist the lever knob upward.

The key must be in the “ON” position.

Lever position	Speed setting
Position 1	Intermittent
Position 2	Normal

To squirt washer fluid on the rear window, twist the knob upward or downward as far as it will go (position 3 or 4). The knob automatically returns from these positions after you release it.

For instructions on adding washer fluid, see “Adding washer fluid” in Section 7-3.

NOTICE
Do not operate the rear wiper if the rear window is dry. It may scratch the glass.

Rear window defogger

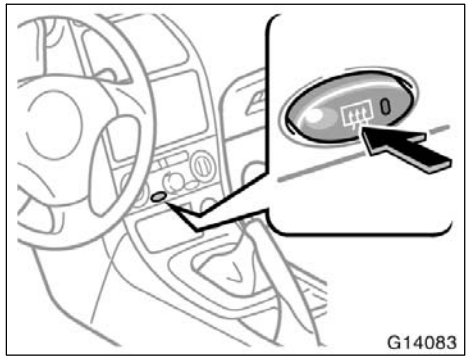

To defog or defrost the rear window, push the switch.

The key must be in the "ON" position.

The thin heater wires on the inside of the rear window will quickly clear the surface. An indicator light will illuminate to indicate the defogger is operating.

Push the switch once again to turn the defogger off.

The system will automatically shut off after the defogger has operated about 15 minutes.

Make sure you turn the defogger off when the window is clear. Leaving the defogger on for a long time could cause the battery to discharge, especially during stop-and-go driving. The defogger is not designed for drying rain water or for melting snow.

NOTICE
When cleaning the inside of the rear window, be careful not to scratch or damage the heater wires or connectors.

SECTION 1 - 5

OPERATION OF INSTRUMENTS AND CONTROLS

Gauges, Meters and Service reminder indicators

Fuel gauge 74
Engine coolant temperature gaugege 74
Tachometer 75
Odometer and two trip meters 76
Service reminder indicators and warning buzzersrs 76

Fuel gauge

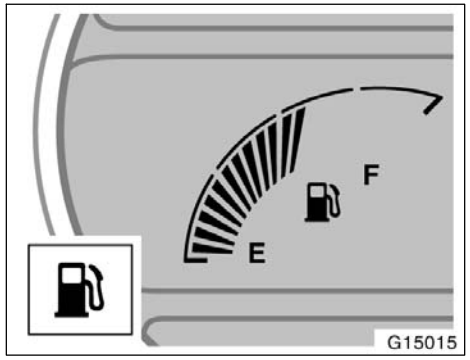

The gauge works when the ignition switch is on and indicates the approximate quantity of fuel remaining in the tank.

Nearly full—Indicator at “F”
Nearly empty—Indicator at “E”

It is a good idea to keep the tank over 1/4 full.

If the fuel level approaches “E” or the low fuel level warning light comes on, fill the fuel tank as soon as possible.

If the fuel tank is full or the fuel quantity has increased or decreased by more than 5 liters since the vehicle was turned off, the position display is recalculated. If the fuel quantity has increased or decreased by less than 5 liters since the vehicle was turned off, the previous position is displayed.

If the fuel tank is completely empty, the malfunction indicator lamp comes on. Fill the fuel tank immediately.

The indicator lamp goes off after driving several times. If the indicator lamp does not go off, contact your Toyota dealer as soon as possible.

If the fuel gauge display flashes or the remaining quantity is not displayed after the flashing, there may be a problem in the system. In this case, contact your Toyota dealer as soon as possible.

Engine coolant temperature gauge

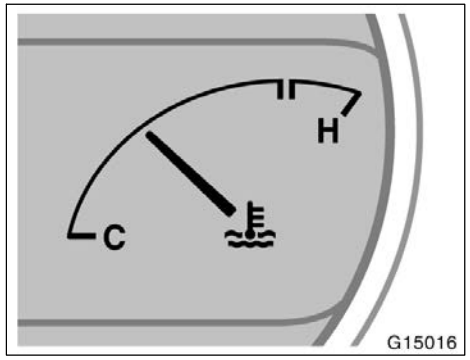

The gauge indicates the engine coolant temperature when the ignition switch is on. The engine operating temperature will vary with changes in weather and engine load.

If the needle moves to the “H” position and flashes, your engine is too hot. If your vehicle overheats, stop your vehicle and allow the engine to cool.

Your vehicle may overheat during severe operating conditions, such as:

- Driving up a long hill on a hot day.
- Reducing speed or stopping after high speed driving.
- Idling for a long period with the air conditioning on in stop-and-go traffic.

- Towing a trailer.

If the engine coolant temperature gauge needle is not displayed, there may be a problem in the system. In this case, contact your Toyota dealer as soon as possible.

NOTICE

◆Do not remove the thermostat in the engine cooling system as this may cause the engine to overheat. The thermostat is designed to control the flow of coolant to keep the temperature of the engine within the specified operating range.

◆Do not continue driving with an overheated engine. See “If your vehicle overheats” in Section 4.

Tachometer

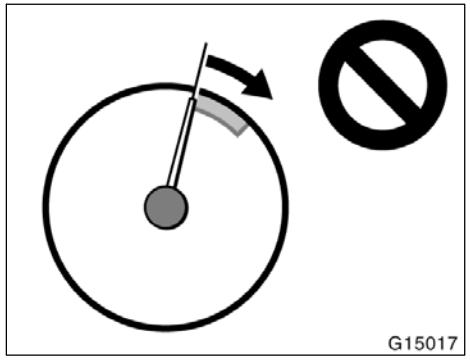

The tachometer indicates engine speed in thousands of rpm (revolutions per minute). Use it while driving to select correct shift points and to prevent engine lugging and over-revving.

Driving with the engine running too fast causes excessive engine wear and poor fuel economy. Remember, in most cases the slower the engine speed, the greater the fuel economy.

NOTICE

◆Do not let the indicator needle get into the red zone. This may cause severe engine damage.

◆2ZZ-GE engine only—The engine will not exceed 7100 rpm before it warms up.

Odometer and two trip meters

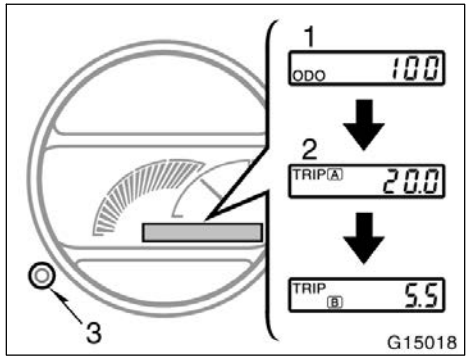

This meter displays the odometer and two trip meters.

1. Odometer—Shows the total distance the vehicle has been driven.
2. Two trip meters—Show two different distances independently driven since the last time each trip meter was set to zero.

   You can use one trip meter to calculate the fuel economy and the other to measure the distance on each trip. All trip meter data is cancelled if the electrical power source is disconnected.
3. Trip meter reset knob—Resets the two trip meters to zero, and also change the meter display.

   To change the meter display, quickly push and release the knob. The meter display changes in the order from the odometer to trip meter A to trip meter B, then back to the odometer each time you push.

   To reset the trip meter A to zero, display the meter A reading, then push and hold the knob until the meter is set to zero. The same process can be applied for resetting the trip meter B.

Service reminder indicators and warning buzzers

If the indicator or buzzer comes on...		Do this.
(a)	BRAKE or	If parking brake is off, stop immediately and contact Toyota dealer.
(b)		Fasten driver’s seat belt.
(c)	PASSENGER	Fasten front passenger’s seat belt.
(d)		Stop and check.
(e)		Stop and check.

If the indicator or buzzer comes on...		Do this.
(f)	CHECK	Take vehicle to Toyota dealer.
(g)		Fill up tank.
(h)	ABS or (ABS)	Take vehicle to Toyota dealer. If the brake system warning light is also on, stop immediately and contact Toyota dealer.
(i)		Close both side doors and back door.

If the indicator or buzzer comes on...		Do this.
(j)		Take vehicle to Toyota dealer immediately.
(k)	A/T OIL TEMP	Stop and check.
(l) Key reminder buzzer		Remove key.
(m) Light reminder buzzer		Turn off lights.

(a) Brake System Warning Light

This light comes on in the following cases when the ignition key is in the “ON” position.

- When the parking brake is applied...

Vehicles with anti-lock brake system—

This light comes on for a few seconds when the ignition key is turned to the “ON” position even after the parking brake is released.

- When the brake fluid level is low...

CAUTION

It is dangerous to continue driving normally when the brake fluid level is low.

Have your vehicle checked at your Toyota dealer in the following cases:

- The light does not come on even if the parking brake is applied when the ignition key is in the “ON” position.

Vehicles with anti-lock brake system—

- The light does not come on even if the ignition key is turned on with the parking brake released.

A warning light turning on briefly during operation does not indicate a problem.

CAUTION

If either of the following conditions occurs, immediately stop your vehicle at a safe place and contact your Toyota dealer.

- The light does not turn off even after the parking brake is released while the engine is running.

  In this case, the brakes may not work properly and your stopping distance will become longer. Depress the brake pedal firmly and bring the vehicle to an immediate stop.

Vehicles with anti-lock brake system—

- The brake system warning light remains on together with the “ABS” warning light.

  In this case, not only the anti-lock brake system will fail but also the vehicle will become extremely unstable during braking.

(b) Driver’s Seat Belt Reminder Light and Buzzer

This light reminds you to buckle up the driver’s seat belt.

Once the ignition key is turned to “ON” or “START”, the reminder light flashes and buzzer sounds if the driver’s seat belt is not fastened. Unless the driver fastens the belt, the light keeps flashing and the buzzer stops after about 4 to 8 seconds.

(c) Front Passenger’s Seat Belt Reminder Light

This light reminds you to buckle up the front passenger’s seat belt.

Once the ignition key is turned to “ON” or “START”, the reminder light flashes if a passenger sits in the front passenger seat and does not fasten the seat belt. Unless the front passenger fastens the belt, the light stays flashing.

If luggage load is placed on the front passenger seat, depending on its weight and how it is placed on the seat, built-in sensors in the seat cushion may detect the pressure, causing the reminder light to come on.

(d) Discharge Warning Light

This light warns that the battery is being discharged.

If it comes on while you are driving, there is a problem somewhere in the charging system.

The engine ignition will continue to operate, however, until the battery is discharged. Turn off the air conditioning, blower, radio, etc., and drive directly to the nearest Toyota dealer or repair shop.

NOTICE

Do not continue driving if the engine drive belt is broken or loose.

(e) Low Oil Pressure Warning Light

This light warns that the engine oil pressure is too low.

If it flickers or stays on while you are driving, pull off the road to a safe place and stop the engine immediately. Call a Toyota dealer or qualified repair shop for assistance.

The light may occasionally flicker when the engine is idling or it may come on briefly after a hard stop. There is no cause for concern if it then goes out when the engine is accelerated slightly.

The light may come on when the oil level is extremely low. It is not designed to indicate low oil level, and the oil level must be checked using the level dipstick.

NOTICE

Do not drive the vehicle with the warning light on—even for one block. It may ruin the engine.

(f) Malfunction Indicator Lamp

This lamp comes on in the following cases.

a. The fuel tank is completely empty. (See “Fuel gauge” in this section for instructions.)

b. The fuel tank cap is not tightened securely. (See “Fuel tank cap” in Section 1-2 for instructions.)

c. There is a problem somewhere in your engine or automatic transmission electrical system.

If it comes on while you are driving in case c, have your vehicle checked/repaired by your Toyota dealer as soon as possible.

(g) Low Fuel Level Warning Light

This light comes on when the fuel level in the tank becomes nearly empty. Fill up the tank as soon as possible.

(h) “ABS” Warning Light

The light comes on when the ignition key is turned to the “ON” position. If the anti-lock brake system works properly, the light turns off after a few seconds. Thereafter, if the system malfunctions, the light comes on again.

When the “ABS” warning light is on (and the brake system warning light is off), the anti-lock brake system does not operate, but the brake system still operates conventionally.

When the “ABS” warning light is on (and the brake system warning light is off), the anti-lock brake system does not operate so that the wheels could lock up during a sudden braking or braking on slippery road surfaces.

If either of the following conditions occurs, this indicates a malfunction somewhere in the parts monitored by the warning light system. Contact your Toyota dealer as soon as possible to service the vehicle.

- The light does not come on when the ignition key is turned to the “ON” position, or remains on.
- The light comes on while you are driving.

A warning light turning on briefly during operation does not indicate a problem.

⚠ CAUTION

If the “ABS” warning light remains on together with the brake system warning light, immediately stop your vehicle at a safe place and contact your Toyota dealer.

In this case, not only the anti-lock brake system will fail but also the vehicle will become extremely unstable during braking.

(i) Open Door Warning Light

This light remains on until both side doors and back door are completely closed.

(j) SRS Warning Light

This light will come on when the ignition key is turned to the “ON” position. After about 6 seconds, the light will go off. This means the systems of the airbag and front seat belt pretensioners are operating properly.

The warning light system monitors the airbag sensor assembly, front airbag sensors, side airbag sensors, door side airbag sensors, front seat belt pretensioner assemblies, inflators, warning light, interconnecting wiring and power sources.

If either of the following conditions occurs, this indicates a malfunction somewhere in the parts monitored by the warning light system. Contact your Toyota dealer as soon as possible to service the vehicle.

- The light does not come on when the ignition key is turned to the “ON” position, or the light remains on.
- The light comes on or flashes while driving.

(k) Automatic Transmission Fluid Temperature Warning Light

This light warns that the automatic transmission fluid temperature is too high.

If this light comes on while you are driving, slow down and pull off the road. Stop the vehicle at a safe place and put the selector lever in “P”. With the engine idling, wait until the light goes off. If the light goes off, you may start the vehicle again. If the light does not go off, call a Toyota dealer or qualified repair shop for assistance.

(l) Key Reminder Buzzer

This buzzer reminds you to remove the key when you open the driver’s door with the ignition key in the “ACC” or “LOCK” position.

(m) Light reminder buzzer

The buzzer will sound if the headlight switch is left on and the driver’s door is opened with the key removed from the ignition switch.

CHECKING SERVICE REMINDER INDICATORS (except the low fuel level warning light)

1. Apply the parking brake.
2. Open either side door or the back door.
   The open door warning light should come on.
3. Close the door.
   The open door warning light should go off.
4. Turn the ignition key to “ON”, but do not start the engine.
   All the service reminder indicators except the open door warning light should come on. The “ABS” warning light goes off after a few seconds. The SRS warning light goes off after about 6 seconds.

If any service reminder indicator or warning buzzer does not function as described above, have it checked by your Toyota dealer as soon as possible.

SECTION 1 - 6

OPERATION OF INSTRUMENTS AND CONTROLS

Ignition switch, Transmission and Parking brake

Ignition switch with steering lock 82
Automatic transmission 83
Manual transmission 93
Parking brake 94
Cruise control 95

Ignition switch with steering lock

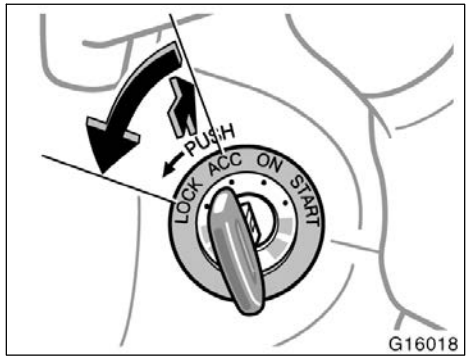

“START”—Starter motor on. The key will return to the “ON” position when released.

For starting tips, see Section 3.

“ON”—Engine on and all accessories on.

This is the normal driving position.

“ACC”—Accessories such as the radio operate, but the engine is off.

If you leave the key in the “ACC” or “LOCK” position and open the driver’s door, a buzzer will remind you to remove the key.

“LOCK”—Engine is off and the steering wheel is locked. The key can be removed only at this position.

You must push in the key to turn the key from “ACC” to the “LOCK” position. On vehicles with an automatic transmission, the selector lever must be in the “P” position before pushing the key.

When starting the engine, the key may seem stuck at the “LOCK” position. To free it, first be sure the key is pushed all the way in, and then rock the steering wheel slightly while turning the key gently.

⚠ CAUTION

For manual transmission:

Never remove the key when the vehicle is moving, as this will lock the steering wheel and result in loss of steering control.

NOTICE

Do not leave the key in the “ON” position if the engine is not running. The battery will discharge and the ignition could be damaged.

Automatic transmission

▶1ZZ-FE engine

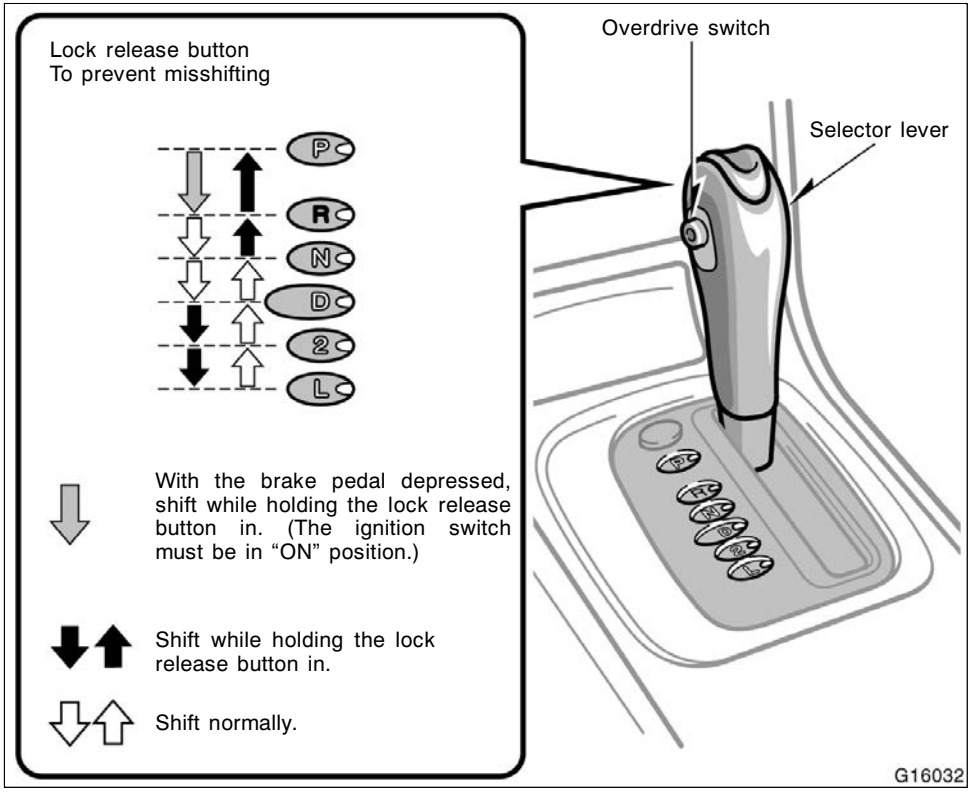

Your automatic transmission has a shift lock system to minimize the possibility of incorrect operation. This means you can only shift out of “P” position when the brake pedal is depressed (with the ignition switch in “ON” position and the lock release button depressed).

(a) Selector lever

The shift position is also displayed on the instrument cluster.

P: Parking, engine starting and key removal

R: Reverse

N: Neutral

D: Normal driving (with overdrive on)

2: Stronger engine braking

L: Maximum engine braking

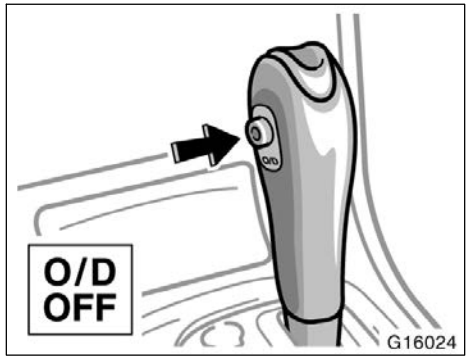

(b) Overdrive switch

You can select either third gear (with overdrive off) or fourth gear (with overdrive on) by pushing this switch.

To turn the overdrive off, push the switch. The “O/D OFF” indicator light should come on. To turn the overdrive on again, push the switch again. The “O/D OFF” indicator light should go off.

Always drive your vehicle with the overdrive on for better fuel economy and quieter driving.

If the engine is turned off when the overdrive is off and restarted, the overdrive will automatically be on.

Vehicles with cruise control—When the cruise control is being used, even if you downshift the transmission by pushing and releasing the overdrive switch, engine braking will not be enabled because the cruise control is not cancelled.

For ways to decrease the vehicle speed, see “Cruise control” in this section.

(c) Normal driving

1. Start the engine as instructed in “How to start the engine” in Section 3. The transmission must be in “P” or “N”.
2. With your foot holding down the brake pedal, shift the selector lever to “D”.

When the lever is in the “D” position, the automatic transmission system will select the most suitable gear for running conditions such as normal cruising, hill climbing, hard towing, etc.

Always turn the overdrive on for better fuel economy and quieter driving. If the engine coolant temperature is low, the transmission will not shift into the overdrive gear even with the overdrive on.

⚠ CAUTION

Never put your foot on the accelerator pedal while shifting.

3. Release the parking brake and brake pedal. Depress the accelerator pedal slowly for smooth starting.

(d) Using engine braking

To use engine braking, you can downshift the transmission as follows:

- Push the overdrive switch. The “O/D OFF” indicator light will come on and the transmission will downshift to third gear.
- Shift into the “2” position. The transmission will downshift to second gear when the vehicle speed drops down to or lower than 101 km/h (63 mph), and stronger engine braking will be enabled.
- Shift into the “L” position. The transmission will downshift to first gear when the vehicle speed drops down to or lower than 50 km/h (31 mph), and maximum engine braking will be enabled.

Vehicles with cruise control—When the cruise control is being used, even if you downshift the transmission by pushing and releasing the overdrive switch, engine braking will not be enabled because the cruise control is not cancelled.

For ways to decrease the vehicle speed, see “Cruise control” in this section.

⚠ CAUTION

Be careful when downshifting on a slippery surface. Abrupt shifting could cause the vehicle to spin or skid.

(e) Using the “2” and “L” positions

The “2” and “L” positions are used for strong engine braking as described previously.

With the selector lever in “2” or “L”, you can start the vehicle in motion as with the lever in “D”.

With the selector lever in “2”, the vehicle will start in first gear and automatically shift to second gear.

With the selector lever in “L”, the transmission is engaged in first gear.

NOTICE

◆Be careful not to over-rev the engine. Watch the tachometer to keep engine rpm from going into the red zone. The approximate maximum allowable speed for each position is given below for your reference:

“2” . . . . . 124 km/h (77 mph)
“L” . . . . . 67 km/h (41 mph)

◆Do not continue hill climbing or hard towing for a long time in the “2” or “L” position. This may cause severe automatic transmission damage from overheating. To prevent such damage, “D” position should be used in hill climbing or hard towing.

(f) Backing up

1. Bring the vehicle to a complete stop.
2. With the brake pedal held down with your foot, shift the selector lever to the “R” position.

NOTICE

Never shift into reverse while the vehicle is moving.

(g) Parking

1. Bring the vehicle to a complete stop.
2. Pull the parking brake lever up fully to securely apply the parking brake.
3. With the brake pedal pressed down, shift the selector lever to the “P” position.

⚠ CAUTION

Never attempt to move the selector lever into “P” position under any circumstances while the vehicle is moving. Serious mechanical damage and loss of vehicle control may result.

(h) Good driving practice

- If the transmission repeatedly shifts up and down between third gear and overdrive when climbing a gentle slope, the overdrive should be turned off. Be sure to turn the switch on immediately afterward.
- When towing a trailer, in order to maintain engine braking efficiency, do not use overdrive.

⚠ CAUTION

Always keep your foot on the brake pedal while stopped with the engine running. This prevents the vehicle from creeping.

NOTICE

Do not hold the vehicle on an upgrade with the accelerator pedal. It can cause the transmission to overheat. Always use the brake pedal or parking brake.

(i) Rocking your vehicle in stuck

⚠ CAUTION

If your vehicle becomes stuck in snow, mud, sand, etc., then you may attempt to rock the vehicle free by moving it forward and backward. Do not attempt this procedure if people or objects are anywhere near the vehicle. During the rocking operation the vehicle may suddenly move forward or backward as it becomes unstuck, causing injury or damage to nearby people or objects.

NOTICE

If you rock your vehicle, observe the following precautions to prevent damage to the transmission and other parts.

- Do not depress the accelerator pedal while shifting the selector lever or before the transmission is completely shifted to forward or reverse gear.
- Do not race the engine and avoid spinning the wheels.
- If your vehicle remains stuck after rocking the vehicle several times, consider other ways such as towing.

(j) If you cannot shift the selector lever out of “P” position

If you cannot shift the selector lever from the “P” position even though the brake pedal is depressed, use the shift lock override button. For instructions, see “If you cannot shift automatic transmission selector lever” in Section 4.

▶2ZZ-GE engine

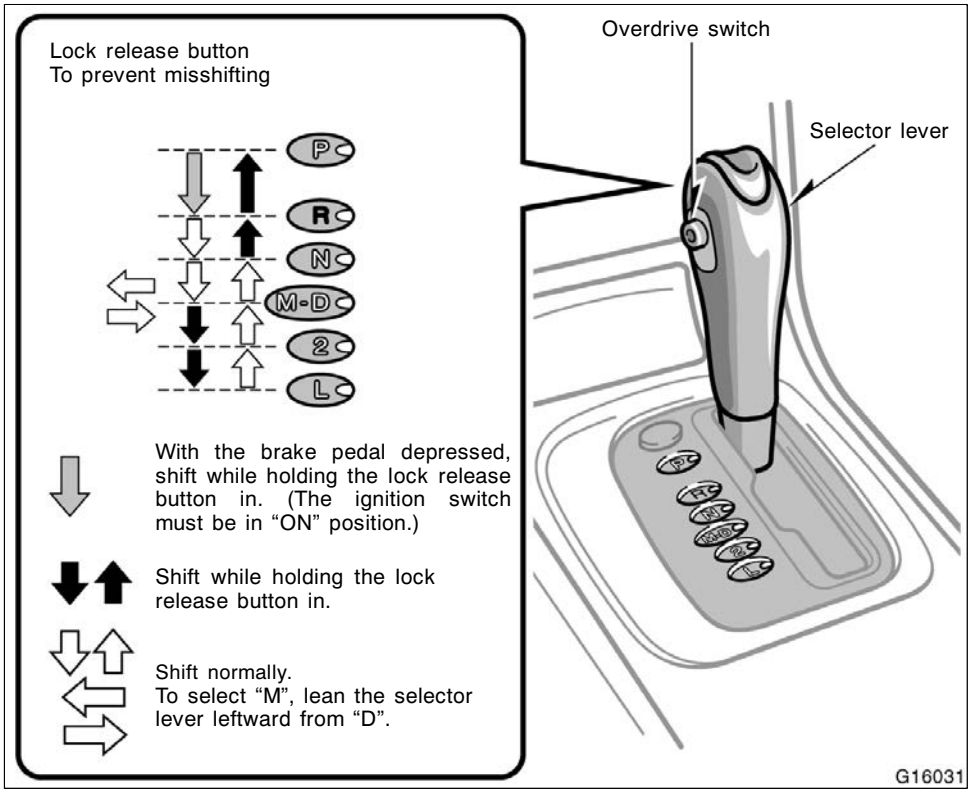

Your automatic transmission has a shift lock system to minimize the possibility of incorrect operation. This means you can only shift out of “P” position when the brake pedal is depressed (with the ignition switch in “ON” position and the lock release button depressed).

(a) Selector lever

The shift position is also displayed on the instrument cluster.

P: Parking, engine starting and key removal

R: Reverse

N: Neutral

D: Normal driving (with overdrive on)

M: “M” position

2: Stronger engine braking

L: Maximum engine braking

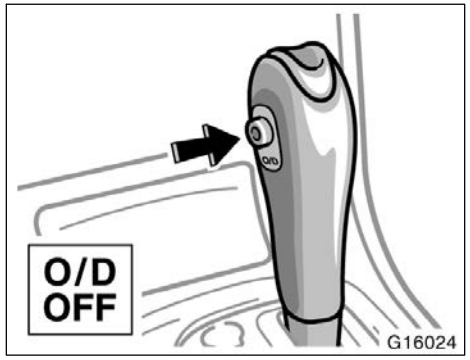

(b) Overdrive switch

You can select either third gear (with overdrive off) or fourth gear (with overdrive on) by pushing this switch.

To turn the overdrive off, push the switch. The “O/D OFF” indicator light should come on. To turn the overdrive on again, push the switch again. The “O/D OFF” indicator light should go off.

Always drive your vehicle with the overdrive on for better fuel economy and quieter driving.

If the engine is turned off when the overdrive is off and restarted, the overdrive will automatically be on.

Vehicles with cruise control—When the cruise control is being used, even if you downshift the transmission by pushing and releasing the overdrive switch, engine braking will not be enabled because the cruise control is not cancelled.

For ways to decrease the vehicle speed, see “Cruise control” in this section.

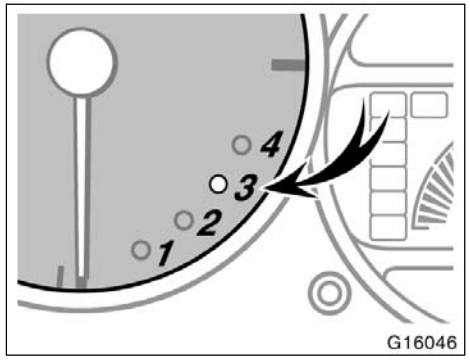

(c) Normal driving

1. Start the engine as instructed in “How to start the engine” in Section 3. The transmission must be in “P” or “N”.
2. With your foot holding down the brake pedal, shift the selector lever to “D”.

When the lever is in the “D” position, the automatic transmission system will select the most suitable gear for running conditions such as normal cruising, hill climbing, hard towing, etc. The current gear position is displayed on the instrument cluster.

Always turn the overdrive on for better fuel economy and quieter driving. If the engine coolant temperature is low, the transmission will not shift into the overdrive gear even with the overdrive on.

⚠ CAUTION

Never put your foot on the accelerator pedal while shifting.

3. Release the parking brake and brake pedal. Depress the accelerator pedal slowly for smooth starting.

(d) Driving in M mode

When the selector lever is into the “M” position, you can select the gear position manually by pushing the transmission shift switches on the steering wheel. The M mode indicator light will be displayed on the instrument cluster.

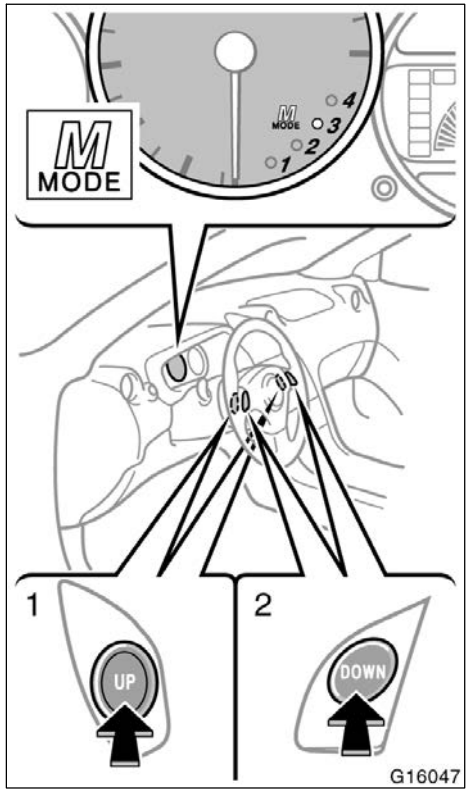

1: Upshift switch (rear)
2: Downshift switch (front)

When you push the transmission upshift switch on the rear of the steering wheel, the transmission upshifts from “1” to “2”, “3” and “4”.

Each time you push the transmission downshift switch on the front of the steering wheel, the transmission downshifts from “4” to “3”, “2” and then to “1”.

The current gear position is displayed on the instrument cluster.

When the overdrive is turned on, the transmission can be upshifted or downshifted between “1” and “4”. When the overdrive is turned off, the transmission can be upshifted or downshifted between “1” and “3”.

Even if the lever is in the “M” position, the transmission will downshift automatically to first gear when you stop the vehicle.

You attempt to downshift the transmission when it is not possible to downshift due to the high vehicle speed. A buzzer will sound when this happens.

You can start from second gear by setting the shift switch while the vehicle is stopped. This is useful for driving your vehicle on slippery (rainy, icy or snow-covered) roads.

Recommended shifting speeds

For the best compromise between fuel economy and vehicle performance, you should upshift or downshift at approximately the following speeds:

gear	km/h (mph)
1 to 2 or 2 to 1	24 (15)
2 to 3 or 3 to 2	40 (25)
3 to 4 or 4 to 3	65 (40)

Downshift to the appropriate gear if acceleration is needed when you are cruising below the above downshifting speeds.

Upshifting too soon or downshifting too late will cause lugging, and possibly pinging. Regularly revving the engine to maximum speed in each gear will cause excessive engine wear and high fuel consumption.

NOTICE

Be careful not to over-rev the engine. Watch the tachometer to keep engine rpm from going into the red zone. The approximate maximum allowable speed for each position is given below for your reference:

“2” ..... 125 km/h (77 mph)
“1” ..... 70 km/h (43 mph)

If the M mode indicator light flashes...

Put the selector lever in the “D” position and drive for a short time.

If the M mode indicator light stops flashing but remains on after the selector lever is returned to the “M” position, you can drive in M mode.

If the M mode indicator light still flashes, there is a problem somewhere in the system. Put the selector lever in the “D” position. Consult with your Toyota dealer as soon as possible.

The M mode indicator light flashes under the following conditions:

- The temperature of the automatic transmission oil is low. The transmission works exactly in the same way as when you put the selector lever in the “D” position.
- The temperature of the automatic transmission oil is high. You can still operate the transmission shift switches.
- There is a problem somewhere in the system.

(e) Using engine braking

To use engine braking, you can downshift the transmission as follows:

- Push the overdrive switch. [This is effective only when you are driving in the “D” position or in fourth gear (“M” position.)] The “O/D OFF” indicator light will come on and the transmission will downshift to third gear, and engine braking will be obtained.
- Shift the selector lever into the “2” position or push the transmission shift switch to the “2” position in M mode. The transmission will downshift to second gear when the vehicle speed drops down to or lower than 115 km/h (71 mph), and stronger engine braking will be enabled.
- Shift the selector lever into the “L” position or push the transmission shift switch to the “1” position in M mode. The transmission will downshift to first gear when the vehicle speed drops down to or lower than 54 km/h (34 mph), and maximum engine braking will be enabled.

Vehicles with cruise control—When the cruise control is being used, even if you downshift the transmission by pushing and releasing the overdrive switch, engine braking will not be enabled because the cruise control is not cancelled.

For ways to decrease the vehicle speed, see "Cruise control" in this section.

CAUTION

Be careful when downshifting on a slippery surface. Abrupt shifting could cause the vehicle to spin or skid.

(f) Using the "2" and "L" positions

The "2" and "L" positions are used for strong engine braking as described previously.

With the selector lever in "2" or "L", you can start the vehicle in motion as with the lever in "D".

With the selector lever in "2", the vehicle will start in first gear and automatically shift to second gear.

With the selector lever in "L", the transmission is engaged in first gear.

NOTICE

- Be careful not to over-rev the engine. Watch the tachometer to keep engine rpm from going into the red zone. The approximate maximum allowable speed for each position is given below for your reference:

  "2" ..... 125 km/h (77 mph)
  "L" ..... 70 km/h (43 mph)

- Do not continue hill climbing or hard towing for a long time in the "2" or "L" position. This may cause severe automatic transmission damage from overheating. To prevent such damage, "D" position should be used in hill climbing or hard towing.

(g) Backing up

1. Bring the vehicle to a complete stop.
2. With the brake pedal held down with your foot, shift the selector lever to the "R" position.

NOTICE

Never shift into reverse while the vehicle is moving.

(h) Parking

1. Bring the vehicle to a complete stop.
2. Pull the parking brake lever up fully to securely apply the parking brake.
3. With the brake pedal pressed down, shift the selector lever to the "P" position.

CAUTION

Never attempt to move the selector lever into "P" position under any circumstances while the vehicle is moving. Serious mechanical damage and loss of vehicle control may result.

(i) Good driving practice

- If the transmission repeatedly shifts up and down between third gear and overdrive when climbing a gentle slope, the overdrive should be turned off. Be sure to turn the switch on immediately afterward.
- When towing a trailer, in order to maintain engine braking efficiency, do not use overdrive.

⚠ CAUTION

Always keep your foot on the brake pedal while stopped with the engine running. This prevents the vehicle from creeping.

NOTICE

Do not hold the vehicle on an upgrade with the accelerator pedal. It can cause the transmission to overheat. Always use the brake pedal or parking brake.

(j) Rocking your vehicle in stuck

⚠ CAUTION

If your vehicle becomes stuck in snow, mud, sand, etc., then you may attempt to rock the vehicle free by moving it forward and backward. Do not attempt this procedure if people or objects are anywhere near the vehicle. During the rocking operation the vehicle may suddenly move forward or backward as it becomes unstuck, causing injury or damage to nearby people or objects.

NOTICE

If you rock your vehicle, observe the following precautions to prevent damage to the transmission and other parts.

- Do not depress the accelerator pedal while shifting the selector lever or before the transmission is completely shifted to forward or reverse gear.
- Do not race the engine and avoid spinning the wheels.
- If your vehicle remains stuck after rocking the vehicle several times, consider other ways such as towing.

(k) If you cannot shift the selector lever out of “P” position

If you cannot shift the selector lever from the “P” position even though the brake pedal is depressed, use the shift lock override button. For instructions, see “If you cannot shift automatic transmission selector lever” in Section 4.

Manual transmission

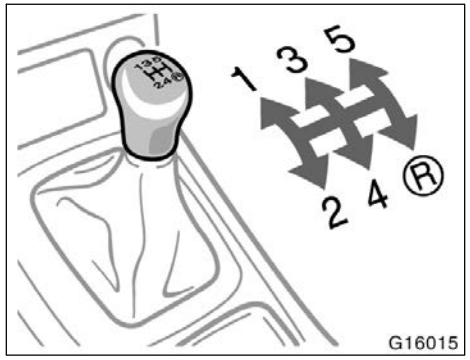

5-speed

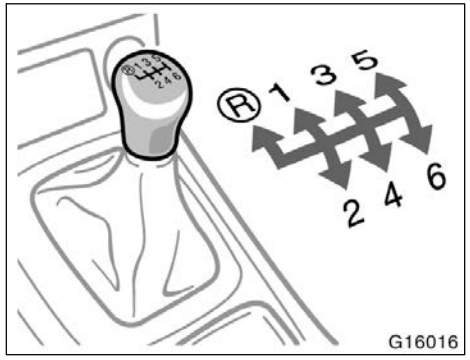

6-speed

The shift pattern is as shown above.

In case of driving your vehicle with 6-speed manual transmission, the buzzer will sound when you shift the gear into "R" (reverse).

Press the clutch pedal down fully while shifting, and then release it slowly. Do not rest your foot on the pedal while driving, because it will cause clutch trouble. And do not use the clutch to hold the vehicle when stopped on an uphill grade—use the parking brake.

Recommended shifting speeds

The transmission is fully synchronized and upshifting or downshifting is easy.

For the best compromise between fuel economy and vehicle performance, you should upshift or downshift at the following speeds:

5-speed

Low altitude

—1219 m (4000 ft.) or lower

gear	km/h	(mph)
1 to 2 or 2 to 1	24	(15)
2 to 3 or 3 to 2	37/40*1	(23/25*1)
3 to 4 or 4 to 3	64/45*2	(40/28*2)
4 to 5 or 5 to 4	72/64*2	(45/40*2)

*1: Under cold engine conditions.

*2: For constant-speed cruise or constant-speed cruise after deceleration.

High altitude

—Higher than 1219 m (4000 ft.)

Upshifting

gear	km/h	(mph)
1 to 2	24	(15)
2 to 3	40	(25)
3 to 4	64	(40)
4 to 5	72	(45)

Downshifting

gear	km/h	(mph)
2 to 1	24	(15)
3 to 2	40	(25)
4 to 3	64	(40)
5 to 4	72	(45)

6-speed

gear	km/h	(mph)
1 to 2 or 2 to 1	24	(15)
2 to 3 or 3 to 2	40	(25)
3 to 4 or 4 to 3	64	(40)
4 to 5 or 5 to 4	72	(45)
5 to 6 or 6 to 5	80	(50)

Downshift to the appropriate gear if acceleration is needed when you are cruising below the above downshifting speeds.

Upshifting too soon or downshifting too late will cause lugging, and possibly pinging. Regularly revving the engine to maximum speed in each gear will cause excessive engine wear and high fuel consumption.

Maximum allowable speeds

To get on a highway or to pass slower traffic, maximum acceleration may be necessary. Make sure you observe the following maximum allowable speeds in each gear:

5-speed

gear	km/h	(mph)
1	56	(35)
2	92	(57)
3	126	(78)
4	171	(106)

6-speed

gear	km/h	(mph)
1	60	(37)
2	93	(58)
3	128	(80)
4	163	(101)
5	208	(129)

NOTICE

Do not downshift if you are going faster than the maximum allowable speed for the next lower gear.

Good driving practice

- If it is difficult to shift into reverse, put the transmission in neutral, release the clutch pedal momentarily, and then try again.
- When towing a trailer, in order to maintain engine braking efficiency, do not use fifth (5-speed models) or sixth gear (6-speed models).

⚠ CAUTION

Be careful when downshifting on a slippery surface. Abrupt shifting could cause the vehicle to spin or skid.

NOTICE

Make sure the vehicle is completely stopped before shifting into reverse.

Parking brake

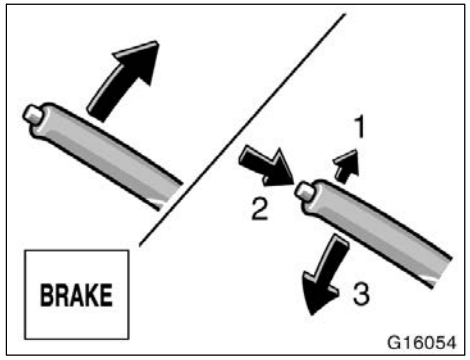

Type A

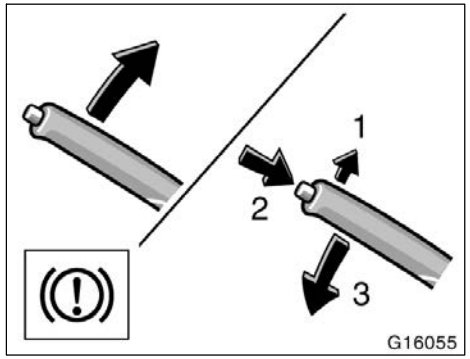

Type B

When parking, firmly apply the parking brake to avoid inadvertent creeping.

To set: Pull up the lever. For better holding power, first depress the brake pedal and hold it while setting the parking brake.
To release: Pull up the lever slightly (1), press the lock release button (2), and lower (3).

To remind you that the parking brake is set, the parking brake reminder light in the instrument panel remains on until you release the parking brake.

⚠ CAUTION

Before driving, be sure the parking brake is fully released and the parking brake reminder light is off.

Cruise control

The cruise control allows you to cruise the vehicle at a desired speed over 40 km/h (25 mph) even with your foot off the accelerator pedal.

Your cruising speed can be maintained up or down grades within the limits of engine performance, although a slight speed change may occur when driving up or down the grades. On steeper hills, a greater speed change will occur so it is better to drive without the cruise control.

⚠ CAUTION

- To help maintain maximum control of your vehicle, do not use the cruise control when driving in heavy or varying traffic, or on slippery (rainy, icy or snow-covered) or winding roads.
- Avoid vehicle speed increases when driving downhill. If the vehicle speed is too fast in relation to the cruise control set speed, cancel the cruise control then downshift the transmission to use engine braking to slow down.

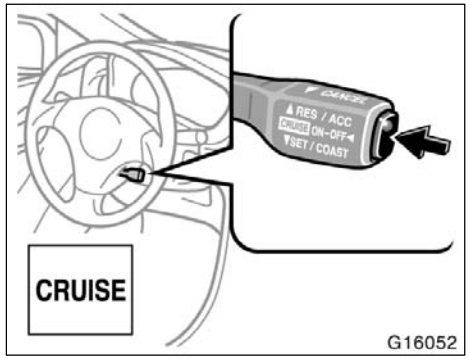

TURNING ON THE SYSTEM

To operate the cruise control, press the "CRUISE ON-OFF" button. This turns the system on. The indicator light in the instrument panel shows that you can now set the vehicle at a desired cruising speed. Another press will turn the system completely off.

⚠ CAUTION

To avoid accidental cruise control engagement, keep the "CRUISE ON-OFF" switch off when not using the cruise control.

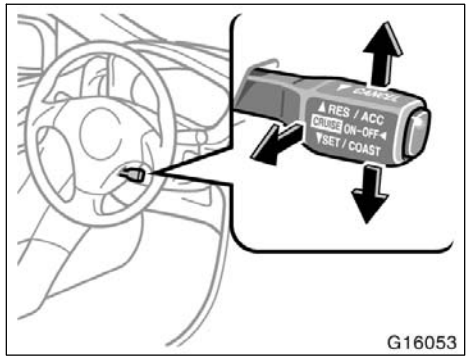

SETTING AT A DESIRED SPEED

On vehicles with automatic transmission, the selector lever must be in the “D” position or the gear position must be “3” or “4” in M mode before you set the cruise control speed.

Bring your vehicle to the desired speed, push the lever down in the “SET/COAST” direction and release it. This sets the vehicle at that speed. If the speed is not satisfactory, tap the lever up for a faster speed, or tap it down for a slower speed. Each tap changes the set speed by 1.6 km/h (1.0 mph). You can now take your foot off the accelerator pedal.

If you need acceleration—for example, when passing—depress the accelerator pedal enough for the vehicle to exceed the set speed. When you release it, the vehicle will return to the speed set prior to the acceleration.

⚠ CAUTION

For manual transmission:

While driving with the cruise control on, do not shift to neutral without depressing the clutch pedal, as this may cause engine racing or over-revving.

CANCELLING THE PRESET SPEED

You can cancel the preset speed by:

a. Pulling the lever in the “CANCEL” direction and releasing it.

b. Depressing the brake pedal.

c. Depressing the clutch pedal (manual transmission).

If the vehicle speed falls below about 40 km/h (25 mph), the preset speed will automatically cancel out.

If the vehicle speed drops 16 km/h (10 mph) below the preset speed, the preset speed will also automatically cancel out.

If the preset speed automatically cancels out other than for the above cases, have your vehicle checked by your Toyota dealer at the earliest opportunity.

RESETTING TO A FASTER SPEED

Push the lever up in the “RES/ACC” direction and hold it. Release the lever when the desired speed is attained. While the lever is held up, the vehicle will gradually gain speed.

However, a faster way to reset is to accelerate the vehicle and then push the lever down in the “SET/COAST” direction.

RESETTING TO A SLOWER SPEED

Push the lever down in the “SET/COAST” direction and hold it. Release the lever when the desired speed is attained. While the lever is held down, the vehicle speed will gradually decrease.

However, a faster way to reset is to depress the brake pedal and then push the lever down in the “SET/COAST” direction.

On vehicles with automatic transmission, even if you turn off the overdrive switch with the cruise control on, engine braking will not be applied because the cruise control is not cancelled. To decrease the vehicle speed, reset to a slower speed with the cruise control lever or depress the brake pedal. If you use the brake pedal, cruise control is cancelled.

RESUMING THE PRESET SPEED

If the preset speed is cancelled by pulling the control lever or by depressing the brake pedal or clutch pedal, pushing the lever up in the “RES/ACC” direction will restore the speed set prior to cancellation.

However, once the vehicle speed falls below about 40 km/h (25 mph), the preset speed will not be resumed.

CRUISE CONTROL FAILURE WARNING

If the “CRUISE” indicator light in the instrument cluster flashes when using the cruise control, press the “CRUISE ON-OFF” button to turn the system off and then press it again to turn it on.

If any of the following conditions then occurs, there is some trouble in the cruise control system.

- The indicator light does not come on.
- The indicator light flashes again.
- The indicator light goes out after it comes on.

If this is the case, contact your Toyota dealer and have your vehicle inspected.

SECTION 1 - 7

OPERATION OF INSTRUMENTS AND CONTROLS

Car audio system

Reference 100
Using your audio system 100
Car audio system operating hints 108

Reference

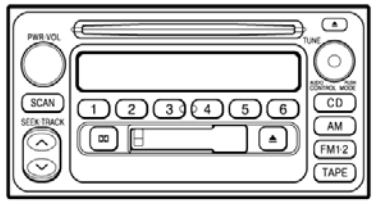

AM·FM ETR radio/cassette player/compact disc player (with compact disc auto changer controller)

Using your audio system— —Some basics

This section describes some of the basic features on Toyota audio systems. Some information may not pertain to your system.

Your audio system works when the ignition key is in the “ACC” or “ON” position.

TURNING THE SYSTEM ON AND OFF

Push “PWR·VOL” to turn the audio system on and off.

Push “AM”, “FM1·2”, “TAPE” or “CD” to turn on that function without pushing “PWR·VOL”.

You can turn on each player by inserting a cassette tape or compact disc.

You can turn off each player by ejecting the cassette tape or compact disc. If the audio system was previously off, then the entire audio system will be turned off when you eject the cassette tape or compact disc. If another function was previously playing, it will come on again.

SWITCHING BETWEEN FUNCTIONS

Push “AM”, “FM1·2”, “TAPE” or “CD” if the system is already on but you want to switch from one function to another.

TONE AND BALANCE

For details about your system’s tone and balance controls, see the description of your own system.

Tone

How good an audio program sounds to you is largely determined by the mix of the treble, midrange, and bass levels. In fact, different kinds of music and vocal programs usually sound better with different mixes of treble, midrange and bass.

Balance

A good balance of the left and right stereo channels and of the front and rear sound levels is also important.

Keep in mind that if you are listening to a stereo recording or broadcast, changing the right/left balance will increase the volume of one group of sounds while decreasing the volume of another.

YOUR RADIO ANTENNA

To remove the antenna, carefully turn it counterclockwise.

NOTICE
To prevent damage to the antenna, make sure it is removed before driving your Toyota through an automatic car wash.

On-glass antenna (built-in on the rear window glass)

NOTICE
Attaching film (especially conductive or metallic type) on the rear glass will noticeably reduce the sensitivity of the radio.

YOUR CASSETTE PLAYER

When you insert a cassette, the exposed tape should be to the right.

NOTICE
Do not oil any part of the player and do not insert anything other than cassette tapes into the slot, or the tape player may be damaged.

YOUR COMPACT DISC PLAYER

When you insert a disc, gently push it in with the label side up. (The player will automatically eject a disc if the label side is down.) The compact disc player will play from track 1 through the end of the disc. Then it will play from track 1 again. On models with the compact disc auto changer, next disc will be played from track 1.

NOTICE
Never try to disassemble or oil any part of the compact disc player. Do not insert anything except a compact disc into the slot.

The player is intended for use with 12 cm (4.7 in.) discs only.

—Controls and features

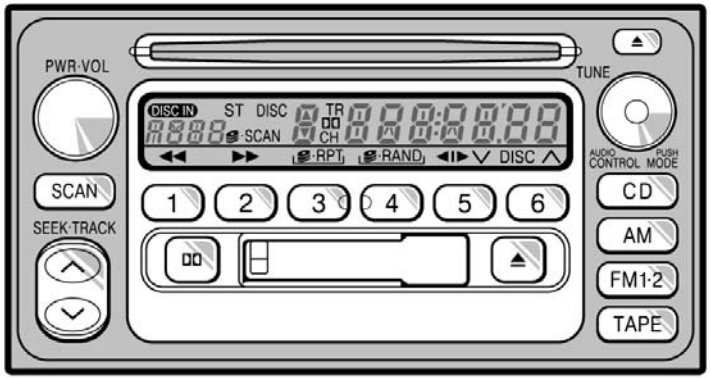

G17029

Details of specific buttons, controls, and features are described in the alphabetical listing that follows.

1 2 3 4 5 6 (Preset buttons)

These buttons are used to preset and tune in radio stations.

To preset a station to a button: Tune in the desired station (see “TUNE” knob or “SEEK” button). Push and hold down the button until you hear a beep—this will set the station to the button. The button number will appear on the display.

To tune in to a preset station: Push the button for the station you want. The button number and station frequency will appear on the display.

These systems can store one AM and two FM stations for each button (The display will show “AM”, “FM1” or “FM2” when you push “AM” “FM1·2”).

⏏ (Eject button)

Push the cassette tape eject button to eject a cassette. Push the compact disc eject button to eject a compact disc.

After you turn the ignition to “LOCK”, you will be able to eject a cassette or disc but you will not be able to reinsert it.

◀I▶ (Program)

Push “◀I▶” to select the other side of a cassette tape. The display indicates which side is currently selected (“▲” indicates top side, “▼” indicates bottom side).

Auto-reverse feature: After the cassette player reaches the end of a tape side, it automatically reverses and begins to play the other side. This is true whether the cassette was playing or fast forwarding.

◀◀/▶▶ (Reverse/Fast forward buttons)

Cassette Player

Push the fast forward button to fast forward a cassette tape. “FF” will appear on the display. Push the reverse button to rewind a tape. “REW” will appear on the display.

To stop the tape while it is fast forwarding, push the fast forward button or “TAPE”; to stop the tape while it is rewinding, push the reverse button or “TAPE”.

If a tape side rewinds completely, the cassette player will stop and then play that same side. If a tape fast forwards completely, the cassette player will play the other side of the tape, using the auto-reverse feature.

Compact Disc Player

If you want to fast forward or reverse through a compact disc track, push and hold in the fast forward or reverse button. When you release the button, the compact disc player will resume playing.

AM

Push “AM” to turn on the radio and select the AM band. “AM” will appear on the display.

If the audio system is off, you can turn on the radio by pushing “AM”. Also, push “AM” to switch from cassette or compact disc operation to radio operation.

CONTROL / MODE (Audio control and mode adjustment)

Manual tone adjustment function—

This knob is used to adjust the tone manually.

For low-pitch tone adjustment, push “CONTROL / MODE” repeatedly until “BAS” appears on the display. Then turn the knob to suit your preference.

The display will show the range from “BAS -5” to “BAS 5”.

Vehicles with 8 speakers only—for middle-pitch tone adjustment, push “CONTROL / MODE” repeatedly until “MId” appears on the display. Then turn the knob to suit your preference.

The display will show the range from “MId -5” to “MId 5”.

For high-pitch tone adjustment, push “CONTROL / MODE” repeatedly until “TRE” appears on the display. Then turn the knob to suit your preference.

The display will show the range from “TRE -5” to “TRE 5”.

Sound balance adjustment function—

This knob is also used to adjust the sound balance between the front and rear, and the right and left speakers.

For front/rear adjustment, push “CONTROL / MODE” repeatedly until “FAd” appears on the display. Then turn the knob to adjust the front/rear balance.

The display will show the range from “FAd-F7” to “FAd-R7”.

For left/right adjustment, push “CONTROL / MODE” repeatedly until “BAL” appears on the display. Then turn the knob to adjust the left/right balance.

The display will show the range from “BAL-L7” to “BAL-R7”.

CD (Compact Disc)

Push “CD” to switch from radio or cassette operation to compact disc operation. If the audio system is off, you can turn on the compact disc player by pushing “CD”. In both cases, a disc must already be loaded in the player.

When the audio is set into compact disc operation, the display shows the track or, track and disc number currently being played. Each time you push “CD”, the system changes to the automatic changer.

If the player malfunctions, your audio system will display one of the six following error messages.

If “WAIT” appears on the display, it indicates that the inside of the player unit may be too hot due to the very high ambient temperature. Remove the disc or magazine from the player and allow the player to cool down.

If “Err 1” appears on the display, it indicates the disc is dirty, damaged, or it was inserted up-side down. Clean the disc or insert it correctly.

If “Err 2” appears on the display, it indicates no disc is loaded inside the magazine. Insert a disc.

If “Err 3” or “Err 4” appears on the display, it indicates there is a trouble inside the system. Eject the disc or magazine. Set the disc or magazine again.

If “OPEn” appears on the display, it indicates the compact disc auto changer lid is open. Close the compact disc auto changer lid.

If the malfunction is not rectified, take your vehicle to your Toyota dealer.

DISC ◻ ◻

Compact disc auto changer only—

By using this button, you can select a disc you wish to listen to.

Push either side of the button until the number of the disc you want to listen to appears on the display.

Dolby® DD B NR*

If you are listening to a tape that was recorded with Dolby® B Noise Reduction, push the button marked with the double-D symbol. The double-D symbol will appear on the display. Push the button again to turn off Dolby® B NR.

The Dolby NR mode reduces tape noise by about 10 dB. For best sound reproduction, play your tapes with this button on or off according to the mode used for recording the tape.

*: Dolby noise reduction manufactured under license from Dolby Laboratories Licensing Corporation. “DOLBY” and the double D symbol DD are trademarks of Dolby Laboratories Licensing Corporation.

FM1·2

Push “FM1·2” to turn on the radio and select the FM band. “FM1” or “FM2” will appear on the display. This system allows you to set twelve FM stations, two for each button.

If the audio system is off, you can turn on the radio by pushing “FM1·2”. Also, push “FM1·2” to switch from cassette or compact disc operation to radio operation.

PWR·VOL (Power and Volume)

Push “PWR·VOL” to turn the audio system on and off. Turn “PWR·VOL” to adjust the volume.

RAND (Random)

There are two random features—you can either listen to the tracks on all the compact discs in the magazine in random order, or only listen to the tracks on a specific compact disc in random order.

To randomly play the tracks on a disc: Quickly push and release “RAND”. “RAND” will appear on the display. The disc you are listening to will play in random order. If you hear a beep, you held the button too long, and the player will play all the tracks in the magazine in random order. To turn off the random feature, push this button again.

Compact disc auto changer only—

To randomly play the tracks in the magazine:
Push and hold “RAND” until you hear a beep. “RAND” will appear on the display and the player will perform all the tracks on all the discs in the magazine in random order. To turn off the random feature, push this button again.

RPT (Repeat)

Cassette Player

Push “RPT” while the track is playing. “RPT” will appear on the display. When the track ends, it will automatically be rewound and replayed. This process will be continued until you push the button again to turn off the repeat feature.

There must be at least 3 seconds of blank space between tracks in order for the repeat feature to work correctly.

Compact Disc Player

There are two repeat features—You can either replay a disc track or a whole compact disc.

Repeating a track:

Quickly push and release “ RPT ” while the track is playing. “RPT” will appear on the display. If you hear a beep, you held the button too long, and the player will repeat the whole disc. When the track ends, it will automatically be replayed. This process will be continued until you push the button again to turn off the repeat feature.

Compact disc auto changer only—

Repeating a disc:

Push and hold “ RPT ” until you hear a beep. “ ·RPT” will appear on the display. The player will repeat all the tracks on the disc you are listening to. When the disc ends, the player will automatically go back to the top track of the disc and replay. This process will be continued until you push the button again to turn off the repeat feature.

SCAN

Radio

You can either scan all the frequencies on a band or scan only the preset stations for that band.

To scan the preset stations:
Push and hold “SCAN” until you hear a beep. The radio will tune in the next preset station up the band, stay there for 5 seconds, and then move to the next preset station. To select a station, push “SCAN” again.

To scan all the frequencies:
Quickly push and release “SCAN”. If you hear a beep, you held the button too long, and the radio will scan the preset stations. The radio will find the next station up the station band, stay there for 5 seconds, and then scan again. To select a station, push “SCAN” again.

Compact disc player

There are two scan features—you can either scan the tracks on a specific disc or scan the first tracks of all the discs in the magazine.

Scanning the tracks on a disc:
Quickly push and release “SCAN”. “SCAN” will appear on the display and the player will scan all the tracks on the disc you are listening to. If you hear a beep, you held the button too long, and the player will scan the first track of all the discs in the magazine. To select a track, push “SCAN” again. If the player scanned all the tracks on the disc, it will stop scanning.

Compact disc auto changer only—

Scanning the first track of all the discs in the magazine:
Push “SCAN” until you hear a beep. “ ·SCAN” will appear on the display and the player will perform the first track of the next disc. To select a disc, push the “SCAN” again. If the player has scanned all the discs, it will stop scanning.

SEEK (Seeking)

Radio

In the seek mode, the radio finds and plays the next station up or down the station band.

To seek a station, quickly push and release the “◻” or “◻” under the “SEEK”. Do this again to find another station.

Cassette Player

By using this button, you can skip up or down to a different track.

You can skip up to nine tracks at a time.

Push the up or down side of the button. “FF 1” or “REW 1” will appear on the display.

Next, push either side of the track button until the number on the display reaches the number of tracks you want to skip. If you push the button ten times, the skip feature will be turned off.

When counting the number of tracks you want to rewind, remember to count the current track as well. For example, if you want to rewind to a song that is two before the song you are listening to, push on the down side of the button until “REW 3” appears on the display.

If you have pushed the track button more than you wanted to, push the other side of the button. The track number will be reduced.

The track number you select is not valid if it is higher than the number of tracks remaining on the current cassette side.

- After the beginning of the tape is reached, the player will automatically start playing the same side.
- After the end of the tape is reached, the player will automatically reverse sides and start playing the other side.

There must be at least 3 seconds of blank space between tracks for the track button to work correctly. In addition, the feature may not work well with some spoken word, live, or classical recordings.

ST (Stereo reception) display

Your radio automatically changes to stereo reception when a stereo broadcast is received. “ST” appears on the display. If the signal becomes weak, the radio reduces the amount of channel separation to prevent the weak signal from creating noise. If the signal becomes extremely weak, the radio switches from stereo to mono reception.

TAPE

Push “TAPE” to switch from radio or compact disc operation to cassette operation. If the audio system is off, you can turn on the cassette player by pushing “TAPE”. In both cases, a cassette must already be loaded in the player.

TRACK (Track up/down button):
Compact disc player

By using this button, you can skip up or down to a different track.

Push either side of the track button until the number of the track you want to listen to appears on the display. If you want to return to the beginning of the current track, push the down side of the button one time, quickly.

TUNE (Tuning)

Your Toyota has an electronic tuning radio (ETR). Turn the knob clockwise to step up the frequency. Turn the knob counterclockwise to step down the frequency.

Car audio system operating hints

NOTICE

To ensure the correct audio system operation:

- Be careful not to spill beverages over the audio system.
- Do not put anything other than a cassette tape or Compact Disc into the slot.
- The use of cellular phone inside or near the vehicle may cause a noise from the speakers of the audio system which you are listening to. However, this does not indicate a malfunction.

RADIO RECEPTION

Usually, a problem with radio reception does not mean there is a problem with your radio—it is just the normal result of conditions outside the vehicle.

For example, nearby buildings and terrain can interfere with FM reception. Power lines or telephone wires can interfere with AM signals. And of course, radio signals have a limited range. The farther you are from a station, the weaker its signal will be. In addition, reception conditions change constantly as your vehicle moves.

Here are some common reception problems that probably do not indicate a problem with your radio:

FM

Fading and drifting stations—Generally, the effective range of FM is about 40 km (25 miles). Once outside this range, you may notice fading and drifting, which increase with the distance from the radio transmitter. They are often accompanied by distortion.

Multi-path—FM signals are reflective, making it possible for two signals to reach your antenna at the same time. If this happens, the signals will cancel each other out, causing a momentary flutter or loss of reception.

Static and fluttering—These occur when signals are blocked by buildings, trees, or other large objects. Increasing the bass level may reduce static and fluttering.

Station swapping—If the FM signal you are listening to is interrupted or weakened, and there is another strong station nearby on the FM band, your radio may tune in the second station until the original signal can be picked up again.

AM

Fading—AM broadcasts are reflected by the upper atmosphere—especially at night. These reflected signals can interfere with those received directly from the radio station, causing the radio station to sound alternately strong and weak.

Station interference—When a reflected signal and a signal received directly from a radio station are very nearly the same frequency, they can interfere with each other, making it difficult to hear the broadcast.

Static—AM is easily affected by external sources of electrical noise, such as high tension power lines, lightening, or electrical motors. This results in static.

CARING FOR YOUR CASSETTE PLAYER AND TAPES

For the best performance for your cassette player and tapes:

Clean the tape head and other parts regularly.

- A dirty tape head or tape path can decrease sound quality and tangle your cassette tapes. The easiest way to clean them is by using a cleaning tape. (A wet type is recommended.)

Use high-quality cassettes.

- Low-quality cassette tapes can cause many problems, including poor sound, inconsistent playing speed, and constant auto-reversing. They can also get stuck or tangled in the cassette player.
- Do not use a cassette if it has been damaged or tangled or if its label is peeling off.
- Do not leave a cassette in the player if you are not listening to it, especially if it is hot outside.
- Store cassettes in their cases and out of direct sunlight.
- Avoid using cassettes with a total playing time longer than 100 minutes (50 minutes per side). The tape used in these cassettes is thin and could get stuck or tangled in the cassette player.

CARING FOR YOUR COMPACT DISC PLAYER AND DISCS

- Use only compact discs labeled as shown. CD-R (CD-Recordable), CD-RW (CD-Re-writable) and personal computer use CD-ROMs may not be playable on your compact disc player.
- Your compact disc player is intended for use with 12 cm (4.7 in.) discs only.
- Extremely high temperatures can keep your compact disc player from working. On hot days, use the air conditioning to cool the vehicle interior before you listen to a disc.
- Bumpy roads or other vibrations may make your compact disc player skip.
- If moisture gets into your compact disc player, you may not hear any sound even though your compact disc player appears to be working. Remove the disc from the player and wait until it dries.

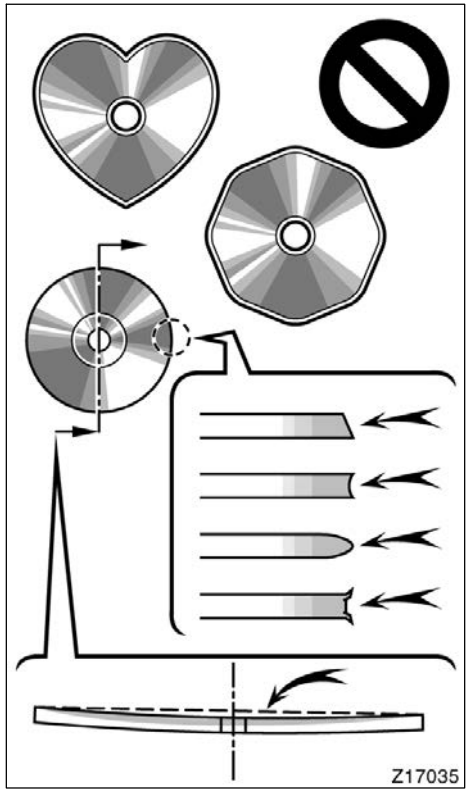

- Your compact disc player cannot play special shaped or low-quality compact discs such as those shown here. Do not use them as the player could be damaged.
- Handle compact discs carefully, especially when you are inserting them. Hold them on the edge and do not bend them. Avoid getting fingerprints on them, particularly on the shiny side.
- Dirt, scrapes, warping, pin holes, or other disc damage could cause the player to skip or to repeat a section of a track. (To see a pin hole, hold the disc up to the light.)
- Remove discs from the compact disc player when you are not listening to them. Store them in their plastic cases away from moisture, heat, and direct sunlight.

To clean a compact disc: Wipe it with a soft, lint-free cloth that has been dampened with water. Wipe in a straight line from the center to the edge of the disc (not in circles). Dry it with another soft, lint-free cloth. Do not use a conventional record cleaner or anti-static device.

⚠ CAUTION

Compact disc players use an invisible laser beam which could cause hazardous radiation exposure if directed outside the unit. Be sure to operate the player correctly.

SECTION 1 - 8

OPERATION OF INSTRUMENTS AND CONTROLS

Air conditioning system

Controls 112
Air flow selector settings 115
Operating tips 115
Instrument panel vents 117

Controls

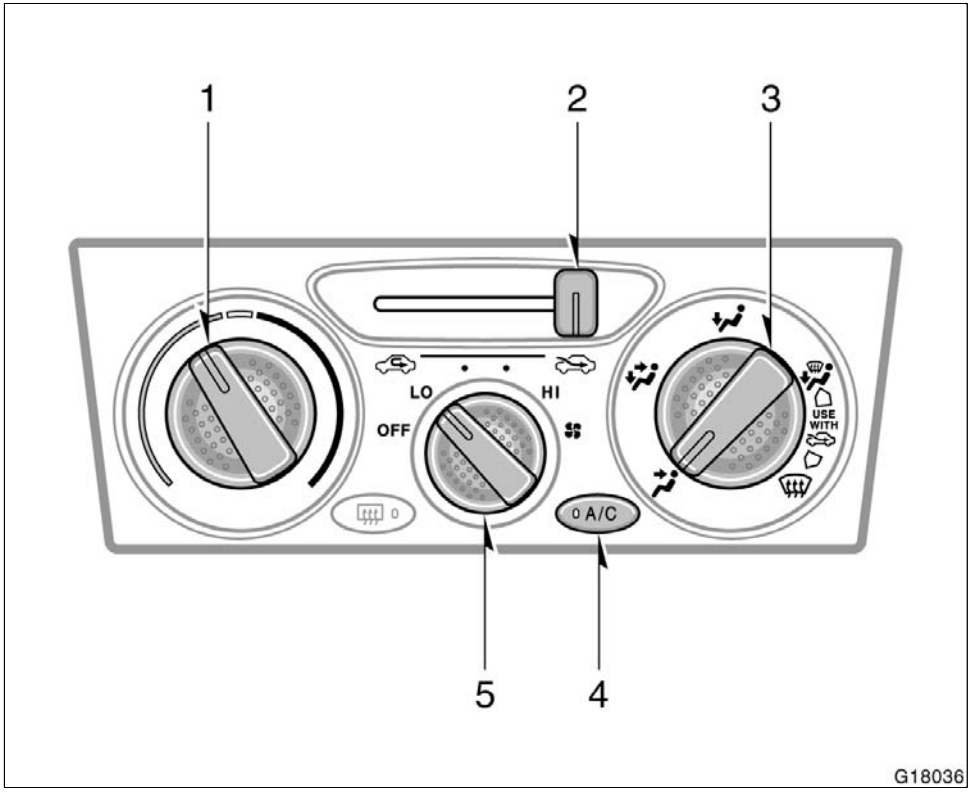

1. Temperature Selector
2. Air Intake Selector
3. Air Flow Selector
4. “A/C” Button (on some models)
5. Fan Speed Selector

Fan speed selector

Turn the knob to adjust the fan speed—to the right to increase, to the left to decrease.

Temperature selector

Turn the knob to adjust the temperature—to the right to warm, to the left to cool.

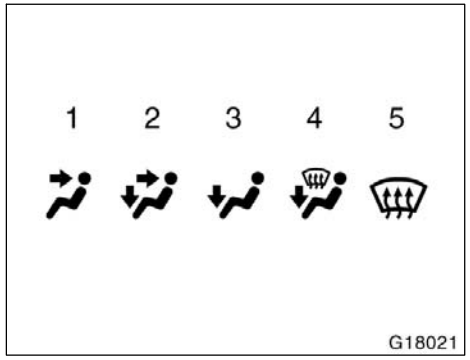

Air flow selector

Turn the knob to select the vents used for air flow.

1. Panel—Air flows mainly from the instrument panel vents.
2. Bi-level—Air flows from both the floor vents and the instrument panel vents.
3. Floor—Air flows mainly from the floor vents.
4. Floor/Windshield—Air flows mainly from the floor vents and windshield vents.

   Use with the air intake selector positioned in Fresh.
5. Windshield—Air flows mainly from the windshield vents.

   Turning the air flow selector to the windshield position turns on the defogging function with the purpose of clearing the front view.

   Use with the air intake selector positioned in Fresh.

Vehicles with “A/C” button—

Press the “A/C” button for dehumidified heating or cooling. This setting clears the front view more quickly.

For details about air flow selector settings, see the illustration after “A/C” button.

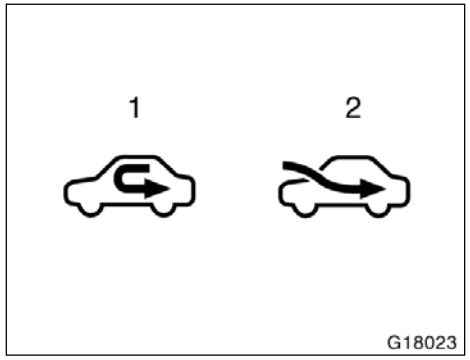

Air intake selector

Move the lever to select the air source.

1. Recirculate—Recirculates the air inside the vehicle.
2. Fresh—Draws outside air into the system.

“A/C” button

To turn on the air conditioning, press the “A/C” button. The “A/C” button indicator will come on. To turn the air conditioning off, press the button again.

If the “A/C” button indicator flashes, there is a problem in the air conditioning system and the air conditioning automatically shuts off. If this happens, take your vehicle to a Toyota dealer for service.

Air flow selector settings

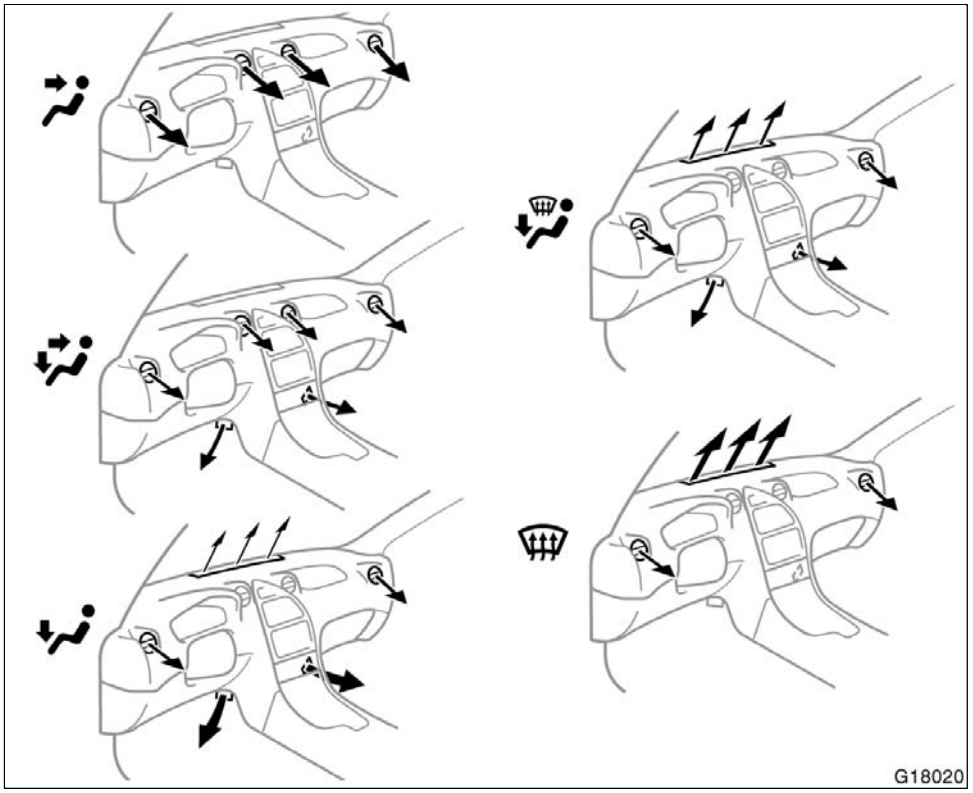

Operating tips

- To cool off your Toyota after it has been parked in the hot sun, drive with the windows open for a few minutes. This vents the hot air, allowing the air conditioning to cool the interior more quickly.
- Make sure the air intake grilles in front of the windshield are not blocked (by leaves or snow, for example).
- On humid days, do not blow cold air on the windshield. The windshield could fog up because of the difference in air temperature on the inside and outside of the windshield.
- Keep the area under the front seats clear to allow air to circulate throughout the vehicle.
- On cold days, turn the fan speed selector to “HI” for a minute to help clear the intake ducts of snow or moisture. This can reduce the amount of fogging on the windows.
- When driving on dusty roads, close all windows. If dust thrown up by the vehicle is still drawn into the vehicle after closing the windows, it is recommended that the air intake selector be set to FRESH and the fan speed selector to any setting except “OFF”.

- If following another vehicle on a dusty road, or driving in windy and dusty conditions, it is recommended that the air intake selector be temporarily set to RECIRCULATE, which will close off the outside passage and prevent outside air and dust from entering the vehicle interior.

Heating

For best results, set controls to:

Fan speed—Any setting except “OFF”
Temperature—Towards WARM (red zone)
Air intake—FRESH (outside air)
Air flow—FLOOR
Air conditioning—OFF

- For quick heating, select recirculated air for a few minutes. To keep the windows from fogging. select fresh after the vehicle interior has been warmed.
- Press the “A/C” button on for dehumidified heating.
- Choose floor/windshield air flow to heat the vehicle interior while defrosting or defogging the windshield.

Air conditioning

For best results, set controls to:

Fan speed—Any setting except “OFF”
Temperature—Towards COLD (blue zone)
Air intake—FRESH (outside air)
Air flow—PANEL
Air conditioning—ON

- For quick cooling, move the air intake selector to recirculate for a few minutes.

Ventilation

For best results, set controls to:

Fan speed—Any setting except “OFF”
Temperature—Towards COLD (blue zone)
Air intake—FRESH (outside air)
Air flow—PANEL
Air conditioning—OFF

Defogging and defrosting

The inside of the windshield

For best results, set controls to:

Fan speed—Any setting except “OFF” Temperature—Towards WARM (red zone) to heat; COLD (blue zone) cool Air intake—FRESH (outside air) Air flow—WINDSHIELD

Turning the air flow selector to the windshield position turns on the defogging function with the purpose of clearing the front view.

Vehicles with “A/C” button—

Press the “A/C” button for dehumidified heating or cooling. This setting clears the front view more quickly.

- On humid days, do not blow cold air on the windshield—the difference between the outside and inside temperatures could make the fogging worse.

The outside of the windshield

For best results, set controls to:

Fan speed—Any setting except “OFF” Temperature—Towards WARM (red zone) Air intake—FRESH (outside air) Air flow—WINDSHIELD

Turning the air flow selector to the windshield position turns on the defogging function with the purpose of clearing the front view.

Vehicles with “A/C” button—

Press the “A/C” button for dehumidified heating or cooling. This setting clears the front view more quickly.

- To heat the vehicle interior while defrosting the windshield, choose floor/windshield air flow.

Instrument panel vents

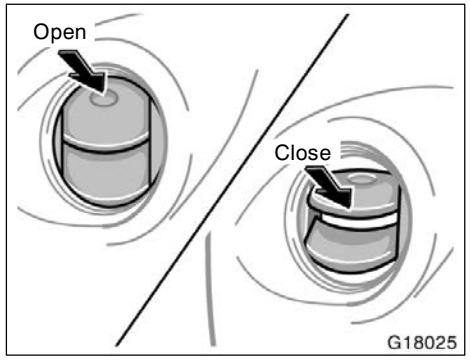

If air flow control is not satisfactory, check the instrument panel vents. The instrument panel vents may be opened or closed as shown.

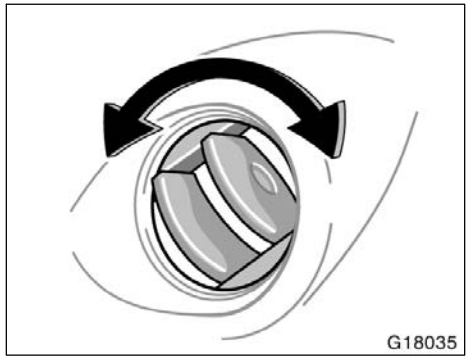

You can change air flow direction by turning the instrument panel vents.

SECTION 1 - 9

OPERATION OF INSTRUMENTS AND CONTROLS

Other equipment

Clock 120
Cigarette lighter and ashtray 120
Glove box 121
Auxiliary boxess 121
Cup holders 122
Tie-down hooks 123
Luggage cover 123
Grocery bag hooks 123
Floor mat 124

Clock

G19001

The digital clock indicates the time.

The key must be in the “ACC” or “ON” position.

To reset the hour: Push the “H” button.
To reset the minutes: Push the “M” button.

If quick adjustment to a full hour is desired, push the “:00” button.

For example, if the “:00” button is depressed when the time is between 1:01—1:29, the time will change to 1:00. If the time is between 1:30—1:59, the time will change to 2:00.

If the electrical power source has been disconnected from the clock, the time display will automatically be set to 1:00 (one o’clock).

When the instrument panel lights are turned on, the brightness of the time indication will be reduced.

Cigarette lighter and ashtray

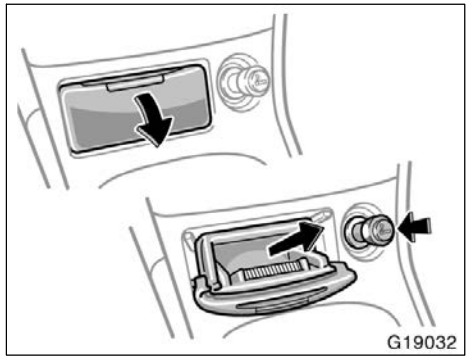

G19032

CIGARETTE LIGHTER

To use the cigarette lighter, press it in. When it becomes heated, it automatically pops out ready for use.

If the engine is not running, the key must be in the “ACC” position.

Do not hold the cigarette lighter pressed in.

Use a Toyota genuine cigarette lighter or equivalent for replacement.

ASHTRAY

To use the ashtray, pull out the lid.

When finished with your cigarette, thoroughly extinguish it in the ashtray to prevent other cigarette butts from catching fire. After using the ashtray, close the lid completely.

To remove the ashtray, pull the lid and pull it out.

⚠ CAUTION

To reduce the chance of injury in case of an accident or sudden stop while driving, always close the lid completely after using.

Glove box

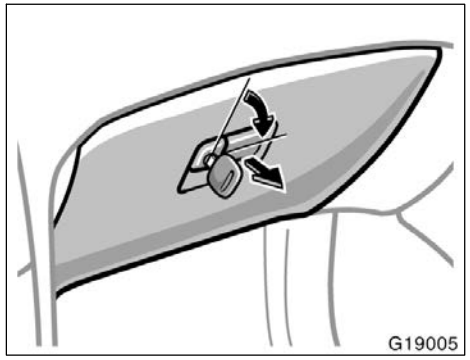

To use the glove box, do this.

To open: Pull the lever.

With the instrument panel lights on, the glove box light will come on when the glove box is open.

To lock: Insert the master key and turn it clockwise.

⚠ CAUTION

To reduce the chance of injury in case of an accident or a sudden stop, always keep the glove box door closed while driving.

Auxiliary boxes

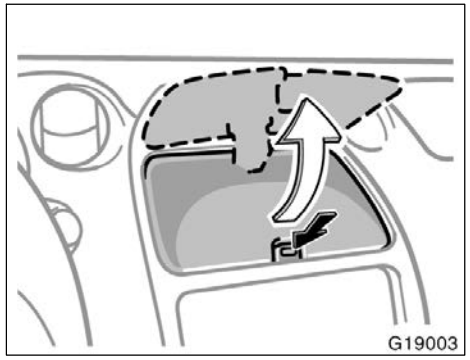

Instrument panel

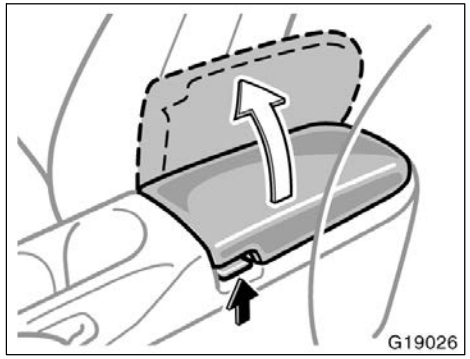

Rear console

To use the boxes, open them as shown in the illustrations.

⚠ CAUTION

To reduce the chance of injury in case of an accident or a sudden stop, always keep the auxiliary box closed while driving.

Cup holders

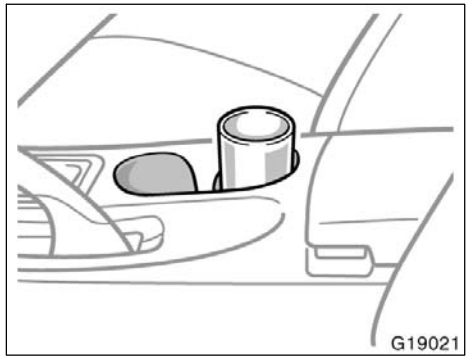

Front

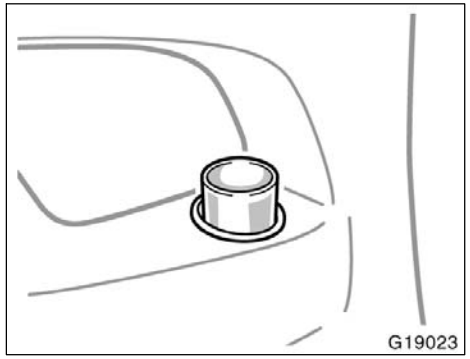

Rear

The cup holders are designed for holding cups or drink-cans securely.

⚠ CAUTION

Do not place anything else on the cup holder, as such item may be thrown about in the compartment and possibly injure people in the vehicle during sudden braking or an accident.

Tie-down hooks

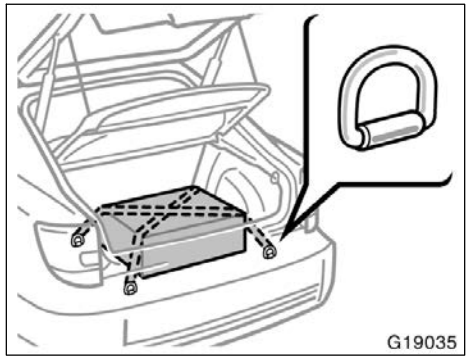

To secure your luggage, use the tie-down hooks as shown above.

See “Luggage stowage precautions” in Section 2 for precautions in loading luggage.

⚠ CAUTION

To avoid personal injury, keep the tie-down hooks stored under the carpet when not in use.

Luggage cover

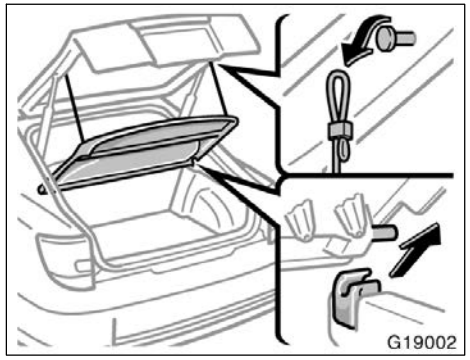

When you open the back door, the luggage cover tilt ups for easy access to the luggage compartment.

For additional luggage space, unhook the cords and lift the cover out of the retainers.

Make sure the luggage cover is surely stowed.

Grocery bag hooks

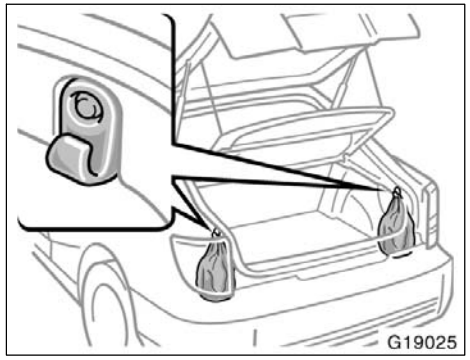

This hook is designed to hang things like grocery bags.

NOTICE

To prevent damage to the hook, avoid hanging heavy loads on it.

Floor mat

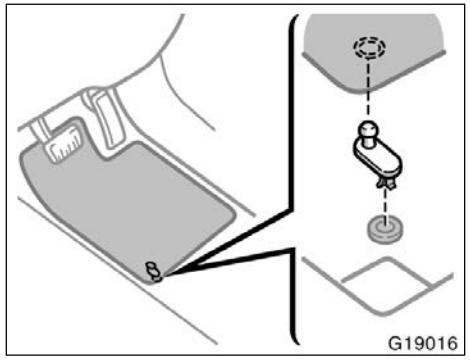

Use a floor mat of the correct size.

If the floor carpet and floor mat have a hole, then it is designed for use with a locking clip. Fix the floor mat with locking clip into the hole in the floor carpet.

⚠ CAUTION

Make sure the floor mat is properly placed on the floor carpet. If the floor mat slips and interferes with the movement of the pedals during driving, it may cause an accident.

SECTION 2

INFORMATION BEFORE DRIVING YOUR TOYOTA

Break-in periodod 126
Fuel 126
Fuel pump shut off system 128
Operation in foreign countries 128
Three-way catalytic converter 129
Engine exhaust cautions 130
Facts about engine oil consumption 130
Iridium-tipped spark plugs 131
Brake system 132
Brake pad wear limit indicators 135
Luggage stowage precautions 135
Your Toyota’s identification 136
Theft prevention labels 137
Suspension and chassis 137
Types of tires 138

Break-in period

Drive gently and avoid high speeds.

Your vehicle does not need an elaborate break-in. But following a few simple tips for the first 1600 km (1000 miles) can add to the future economy and long life of your vehicle:

- Do not drive over 88 km/h (55 mph).
- Run the engine at moderate speed between 2000 and 4000 rpm.
- Avoid full-throttle starts.
- Try to avoid hard stops during the first 300 km (200 miles).
- Do not drive slowly with the transmission in a high gear.
- Do not drive for a long time at any single speed, either fast or slow.
- Do not tow a trailer during the first 800 km (500 miles).

Fuel

FUEL TYPE

Your new vehicle must use only unleaded gasoline.

To help prevent gas station mix-ups, your Toyota has a smaller fuel tank opening. The special nozzle on pumps with unleaded fuel will fit it, but the larger standard nozzle on pumps with leaded gas will not.

At a minimum, the gasoline you use should meet the specifications of ASTM D4814 in the U.S.A. and CGSB 3.5-M93 in Canada.

NOTICE

Do not use leaded gasoline. Use of leaded gasoline will cause the three-way catalytic converter to lose its effectiveness and the emission control system to function improperly. Also, this can increase maintenance costs.

OCTANE RATING

1ZZ-FE engine—
Select Octane Rating 87 (Research Octane Number 91) or higher.

2ZZ-GE engine—
Select premium unleaded gasoline with an Octane Rating of 91 (Research Octane Number 96) or higher for optimum engine performance.

Use of unleaded gasoline with an octane rating or research octane number lower than stated above will cause persistent heavy knocking. If it is severe, this will lead to engine damage.

If your engine knocks...

If you detect heavy knocking even when using the recommended fuel, or if you hear steady knocking while holding a steady speed on level roads, consult your Toyota dealer.

However, now and then, you may notice light knocking for a short time while accelerating or driving up hills. This is no need of concern.

GASOLINE CONTAINING DETERGENT ADDITIVES

Toyota recommends the use of gasoline that contains detergent additives to avoid build-up of engine deposits.

However, all gasoline sold in the U.S. contains detergent additives to keep clean and/or clean intake systems.

QUALITY GASOLINE

Automotive manufacturers in the U.S., Europe and Japan have developed a specification for quality fuel named World-Wide Fuel Charter (WWFC) that is expected to be applied world wide. The WWFC consists of three categories that depend on required emission levels. In the U.S., category 3 has been adopted. The WWFC improves air quality by providing for better emissions in vehicle fleets, and customer satisfaction through better vehicle performance.

CLEANER BURNING GASOLINE

Cleaner burning gasoline, including reformulated gasoline that contains oxygenates such as ethanol or MTBE is available in many areas.

Toyota recommends the use of cleaner burning gasoline and appropriately blended reformulated gasoline. These types of gasoline provide excellent vehicle performance, reduce vehicle emissions, and improve air quality.

OXYGENATES IN GASOLINE

Toyota allows the use of oxygenate blended gasoline where the oxygenate content is up to 10% ethanol or 15% MTBE. If you use gasohol in your Toyota, be sure that it has an octane rating no lower than 87.

Toyota does not recommend the use of gasoline containing methanol.

SULFUR IN GASOLINE

If your vehicle is certified to California Emission Regulations, the vehicle is designed to operate on California cleaner burning gasoline (CBG) that contains lower sulfur. If you cannot use California CBG, your emission control system may suffer damage and turn on the Malfunction Indicator Lamp.

If the malfunction is caused by the type of fuel used, repairs may not be covered by your warranty.

GASOLINE CONTAINING MMT

Some gasoline contain an octane enhancing additive called MMT (Methylcyclopentadienyl Manganese Tricarbonyl).

Toyota does not recommend the use of gasoline that contains MMT. If fuel containing MMT is used, your emission control system may be adversely affected. The Malfunction Indicator Lamp on the instrument cluster may come on. If this happens, contact your Toyota dealer for service.

GASOLINE QUALITY

In a very few cases, you may experience driveability problems caused by the particular gasoline that you are using. If you continue to have unacceptable driveability, try changing gasoline brands. If this does not rectify your problem, then consult your Toyota dealer.

NOTICE

- Do not use gasohol other than stated above. It will cause fuel system damage or vehicle performance problems.
- If driveability problems occur (poor hot starting, vaporizing, engine knock, etc.), discontinue the use.
- Take care not to spill gasohol during refueling. Gasohol may cause paint damage.

FUEL TANK CAPACITY

55 L (14.5 gal., 12.1 Imp. gal.)

Fuel pump shut off system

The fuel pump shut off system stops supplying fuel to the engine to minimize the risk of fuel leakage when the engine stalls or an airbag inflates upon collision. To restart the engine after the fuel pump shut off system activates, turn the ignition switch to “ACC” or “LOCK” once and start it.

CAUTION

Inspect the ground under the vehicle before restarting the engine. If you find that liquid has leaked onto the ground, it is the fuel system has been damaged and it is in need of repair. In this case, do not restart the engine.

Operation in foreign countries

If you plan to drive your Toyota in another country...

First, comply with the vehicle registration laws.

Second, confirm the availability of the correct fuel (unleaded and minimum octane number).

Three-way catalytic converter

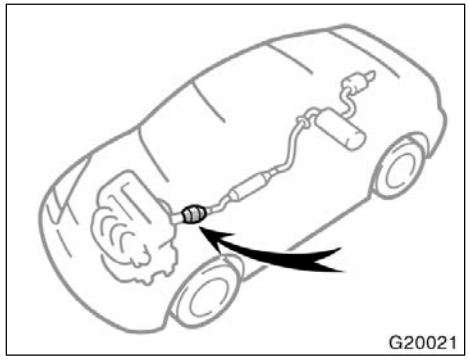

The three-way catalytic converter is an emission control device installed in the exhaust system.

Its purpose is to reduce pollutants in the exhaust gas.

CAUTION

- Keep people and combustible materials away from the exhaust pipe while the engine is running. The exhaust gas is very hot.
- Do not drive, idle or park your vehicle over anything that might burn easily such as grass, leaves, paper or rags.

NOTICE

A large amount of unburned gases flowing into the three-way catalytic converter may cause it to overheat and create a fire hazard. To prevent this and other damage, observe the following precautions:

- Use only unleaded gasoline.
- Do not drive with an extremely low fuel level; running out of fuel could cause the engine to misfire, creating an excessive load on the three-way catalytic converter.
- Do not allow the engine to run at idle speed for more than 20 minutes.
- Avoid racing the engine.
- Do not push-start or pull-start your vehicle.
- Do not turn off the ignition while the vehicle is moving.
- Keep your engine in good running order. Malfunctions in the engine electrical system, electronic ignition system/distributor ignition system or fuel system could cause an extremely high three-way catalytic converter temperature.
- If the engine becomes difficult to start or stalls frequently, take your vehicle in for a check-up as possible. Remember, your Toyota dealer knows your vehicle and its three-way catalytic converter system best.
- To ensure that the three-way catalytic converter and the entire emission control system operate properly, your vehicle must receive the periodic inspections required by the Toyota Maintenance Schedule. For scheduled maintenance information, refer to the "Scheduled Maintenance Guide" or "Owner's Manual Supplement".

Engine exhaust cautions

CAUTION

- Avoid inhaling the engine exhaust. It contains carbon monoxide, which is a colorless and odorless gas. It can cause unconsciousness or even death.
- Make sure the exhaust system has no holes or loose connections. The system should be checked from time to time. If you hit something, or notice a change in the sound of the exhaust, have the system checked immediately.
- Do not run the engine in a garage or enclosed area except for the time needed to drive the vehicle in or out. The exhaust gases cannot escape, making this a particularly dangerous situation.
- Do not remain for a long time in a parked vehicle with the engine running. If it is unavoidable, however, do so only in an unconfined area and adjust the heating or cooling system to force outside air into the vehicle.
- Keep the back door closed while driving. An open or unsealed back door may cause exhaust gases to be drawn into the vehicle.
- To allow proper operation of your vehicle’s ventilation system, keep the inlet grilles in front of the windshield clear of snow, leaves, or other obstructions.
- If you smell exhaust fumes in the vehicle, drive with the windows open and the back door closed. Have the cause immediately located and corrected.

Facts about engine oil consumption

FUNCTIONS OF ENGINE OIL

Engine oil has the primary functions of lubricating and cooling the inside of the engine, and plays a major role in maintaining the engine in proper working order.

ENGINE OIL CONSUMPTION

It is normal that an engine should consume some engine oil during normal engine operation. The causes of oil consumption in a normal engine are as follows.

- Oil is used to lubricate pistons, piston rings and cylinders. A thin film of oil is left on the cylinder wall when a piston moves downwards in the cylinder. High negative pressure generated when the vehicle is decelerating sucks some of this oil into the combustion chamber. This oil as well as some part of the oil film left on the cylinder wall is burned by the high temperature combustion gases during the combustion process.
- Oil is also used to lubricate the stems of the intake valves. Some of this oil is sucked into the combustion chamber together with the intake air and is burned along with the fuel. High temperature exhaust gases also burn the oil used to lubricate the exhaust valve stems.

The amount of engine oil consumed depends on the viscosity of the oil, the quality of the oil and the conditions the vehicle is driven under.

More oil is consumed by high-speed driving and frequent acceleration and deceleration.

A new engine consumes more oil, since its pistons, piston rings and cylinder walls have not become conditioned.

When judging the amount of oil consumption, note that the oil may become diluted and make it difficult to judge the true level accurately.

As an example, if a vehicle is used for repeated short trips, and consumes a normal amount of oil, the dipstick may not show any drop in the oil level at all, even after 1000 km (600 miles) or more. This is because the oil is gradually becoming diluted with fuel or moisture, making it appear that the oil level has not changed.

The diluting ingredients evaporate out when the vehicle is then driven at high speeds, as on an expressway, making it appear that oil is excessively consumed after driving at high speeds.

IMPORTANCE OF ENGINE OIL LEVEL CHECK

One of the most important points in proper vehicle maintenance is to keep the engine oil at the optimum level so that oil function will not be impaired. Therefore, it is essential that the oil level be checked regularly. Toyota recommends that the oil level be checked every time you refuel the vehicle.

NOTICE

Failure to check the oil level regularly could lead to serious engine trouble due to insufficient oil.

For detailed information on oil level check, see “Checking the engine oil level” in Section 7-2.

Iridium-tipped spark plugs

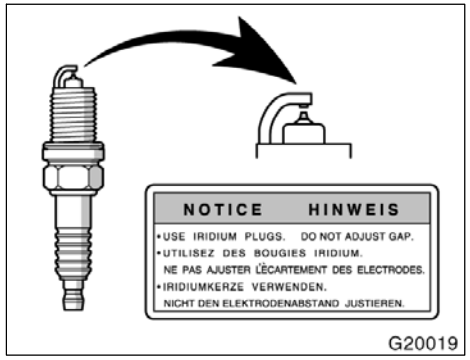

Your engine is fitted with iridium-tipped spark plugs.

NOTICE

Use only iridium-tipped spark plugs and do not adjust gaps for your engine performance and smooth driveability.

Brake system

The tandem master cylinder brake system is a hydraulic system with two separate sub-systems. If either sub-system should fail, the other will still work. However, the pedal will be harder to press, and your stopping distance will be longer. Also, the brake system warning light may come on.

CAUTION

Do not drive your vehicle with only a single brake system. Have your brakes fixed immediately.

BRAKE BOOSTER

The brake booster uses engine vacuum to power-assist the brakes. If the engine should quit while you are driving, you can bring the vehicle to a stop with normal pedal pressure. There is enough reserved vacuum for one or two stops—but no more!

CAUTION

- Do not pump the brake pedal if the engine stalls. Each push on the pedal uses up your reserved vacuum.
- Even if the power assist is completely lost, the brakes will still work. But you will have to push the pedal hard, much harder than normal. And your braking distance will be longer.

ANTI-LOCK BRAKE SYSTEM (with "ABS" warning light)

The anti-lock brake system is designed to help prevent lock-up of the wheels during a sudden braking or braking on slippery road surfaces. This assists in providing directional stability and steering performance of the vehicle under these circumstances.

Effective way to press the ABS brake pedal: When the anti-lock brake system function is in action, you may feel the brake pedal pulsating and hear a noise. In this situation, to let the anti-lock brake system work for you, just hold the brake pedal down more firmly. Do not pump the brake in a panic stop. This will result in reduced braking performance.

The anti-lock brake system becomes operative after the vehicle has accelerated to a speed in excess of approximately 10 km/h (6 mph). It stops operating when the vehicle decelerates to a speed below approximately 5 km/h (3 mph).

Depressing the brake pedal on slippery road surfaces such as on the manhole cover, the steel plate under the construction, joints in the bridge, etc. on a rainy day tends to activate the anti-lock brake system.

You may hear a click or motor sound in the engine compartment for a few seconds when the engine is started or just after the vehicle is started. This means that the anti-lock brake system is in the self check mode, and does not indicate a malfunction.

When the anti-lock brake system is activated, the following conditions may occur. They do not indicate a malfunction of the system:

- You may hear the anti-lock brake system operating and feel the brake pedal pulsating and the vibrations of the vehicle body and steering wheel. You may also hear the motor sound in the engine compartment even after the vehicle is stopped.
- At the end of the anti-lock brake system activation, the brake pedal may move a little forward.

CAUTION

Do not overestimate the anti-lock brake system: Although the anti-lock brake system assists in providing vehicle control, it is still important to drive with all due care and maintain a moderate speed and safe distance from the vehicle in front of you, because there are limits to the vehicle stability and effectiveness of steering wheel operation even with the anti-lock brake system on.

If tires grip performance exceeds its capability, or if hydroplaning occurs during high speed driving in the rain, the anti-lock brake system does not provide vehicle control.

Anti-lock brake system is not designed to shorten the stopping distance: Always drive at the moderate speed and maintain a safe distance from the vehicle in front of you. Compared with vehicles without an anti-lock brake system, your vehicle may require a longer stopping distance in the following cases:

- Driving on rough, gravel or snow-covered roads.
- Driving with tire chains installed.
- Driving over the steps such as the joints on the road.
- Driving on roads where the road surface is pitted or has other differences in surface height.

Install all 4 tires of specified size at appropriate pressure: The anti-lock brake system detects vehicle speeds using the speed sensors for respective wheels’ turning speeds. The use of tires other than specified may fail to detect the accurate turning speed resulting in a longer stopping distance.

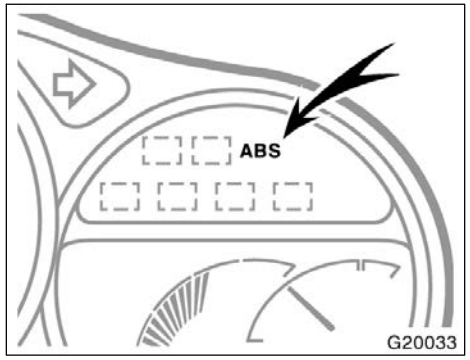

Type A

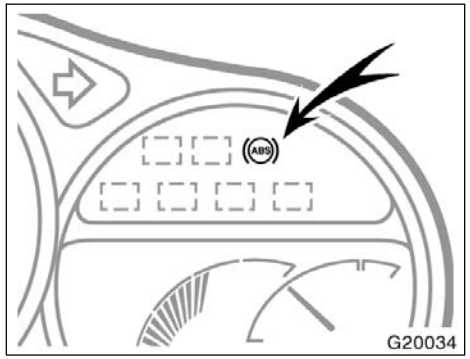

Type B

“ABS” warning light

The light comes on when the ignition key is turned to the “ON” position. If the anti-lock brake system works properly, the light turns off after a few seconds. Thereafter, if the system malfunctions, the light comes on again.

When the “ABS” warning light is on (and the brake system warning light is off), the anti-lock brake system does not operate, but the brake system still operates conventionally.

When the “ABS” warning light is on (and the brake system warning light is off), the anti-lock brake system does not operate so that the wheels could lock up during a sudden braking or braking on slippery road surfaces.

If either of the following conditions occurs, this indicates a malfunction somewhere in the parts monitored by the warning light system. Contact your Toyota dealer as soon as possible to service the vehicle.

- The light does not come on when the ignition key is turned to the “ON” position, or remains on.
- The light comes on while you are driving.

A warning light turning on briefly during operation does not indicate a problem.

⚠ CAUTION

If the “ABS” warning light remains on together with the brake system warning light, immediately stop your vehicle at a safe place and contact your Toyota dealer.

In this case, not only the anti-lock brake system will fail but also the vehicle will become extremely unstable during braking.

DRUM-IN-DISC TYPE PARKING BRAKE SYSTEM

Your vehicle has a drum-in-disc type parking brake system. This type of brake system needs bedding-down of the brake shoes periodically or whenever the parking brake shoes and/or drums are replaced.

Have your Toyota dealer perform the bedding-down.

Brake pad wear limit indicators

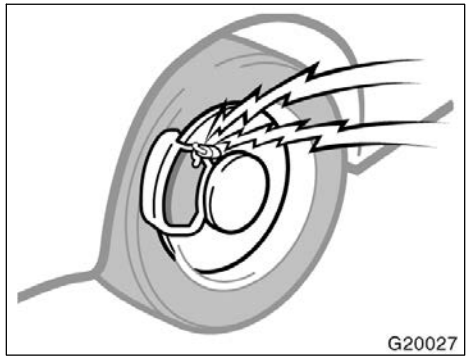

The brake pad wear limit indicators on your disc brakes give a warning noise when the brake pads are worn to where replacement is required.

If you hear a squealing or scraping noise while driving, have the brake pads checked and replaced by your Toyota dealer as soon as possible. Expensive rotor damage can result if the pads are not replaced when necessary.

Luggage stowage precautions

When stowing luggage or cargo in the vehicle, observe the following:

- Put luggage or cargo in the luggage compartment when at all possible. Be sure all items are secured in place.
- Be careful to keep the vehicle balanced. Locating the weight as far forward as possible helps maintain balance.
- For better fuel economy, do not carry unneeded weight.

CAUTION

- To prevent luggage or packages from sliding forward during braking, do not stack anything in the luggage compartment higher than the seatbacks. Keep luggage or package low, as close to the floor as possible.

- Never allow anyone to ride in the luggage compartment. It is not designed for passengers. They should ride in their seats with their seat belts properly fastened. Otherwise, they are much more likely to suffer serious bodily injury, in the event of sudden braking or a collision.
- Do not place anything on the luggage cover. Such items may be thrown about and possibly injure people in the vehicle during sudden braking or an accident.
- Do not drive with objects left on top of the instrument panel. They may interfere with the driver’s field of view. Or they may move during sharp vehicle acceleration or turning, and impair the driver’s control of the vehicle. In an accident they may injure the vehicle occupants.

NOTICE

Do not load the vehicle beyond the vehicle capacity weight specified in Section 8.

Your Toyota’s identification—
—Vehicle identification number

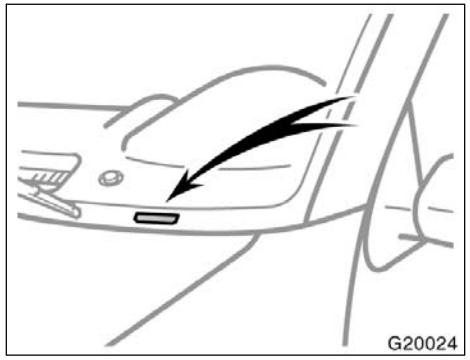

The vehicle identification number (VIN) is the legal identifier for your vehicle. This number is on the left top of the instrument panel, and can be seen through the windshield from outside.

This is the primary identification number for your Toyota. It is used in registering the ownership of your vehicle.

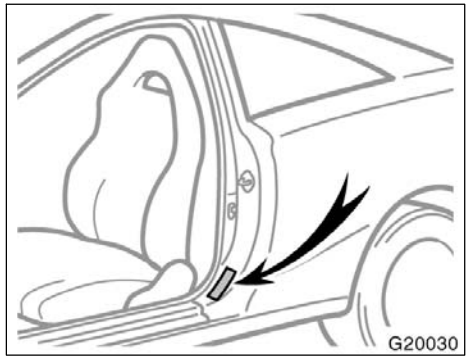

The vehicle identification number (VIN) is also on the Certification Label.

—Engine number

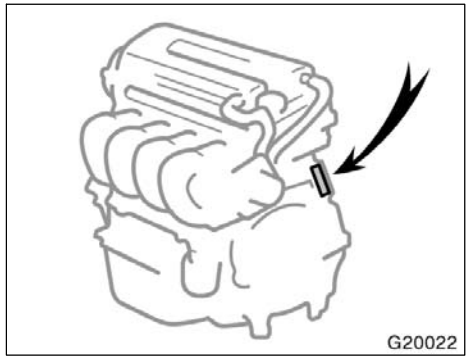

1ZZ-FE engine

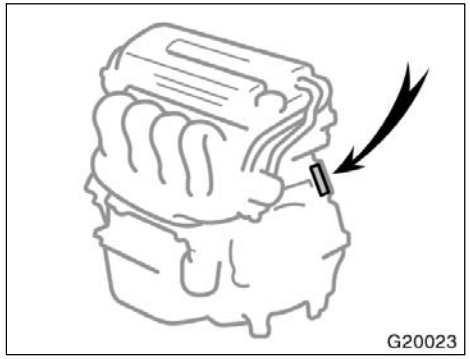

2ZZ-GE engine

The engine number is stamped on the engine block as shown.

Theft prevention labels (except for Canada)

Your new vehicle carries theft prevention labels which are approximately 56 mm (2.20 in.) by 16 mm (0.63 in.).

The purpose of these labels is to reduce the incidence of vehicle thefts by facilitating the tracing and recovery of parts from stolen vehicles. The label is designed so that once it is applied to a surface, any attempt to remove it will result in destroying the integrity of the label. Transferring these labels intact from one part to another, will be impossible.

NOTICE

You should not attempt to remove the theft prevention labels as it may violate certain state or federal laws.

Suspension and chassis

⚠ CAUTION

Do not modify the suspension/chassis with lift kits, spacers, springs, etc. It can cause dangerous handling characteristics, resulting in loss of control.

Types of tires

Determine what kind of tires your vehicle is originally equipped with.

1. Summer tires

Summer tires are high-speed capability tires best suited to highway driving under dry conditions.

Since summer tires do not have the same traction performance as snow tires, summer tires are inadequate for driving on snow-covered or icy roads. For driving on snow-covered or icy roads, we recommend using snow tires. If installing snow tires, be sure to replace all four tires.

2. All season tires

All season tires are designed to provide better traction in snow and to be adequate for driving in most winter conditions, as well as for use all year round.

All season tires, however, do not have adequate traction performance compared with snow tires in heavy or loose snow. Also, all season tires fall short in acceleration and handling performance compared with summer tires in highway driving.

CAUTION

- Do not mix summer and all season tires on your vehicle as this can cause dangerous handling characteristics, resulting in loss of control.
- Do not use tires other than the manufacture’s designated tires, and never mix tires or wheels of the sizes different from the originals.

SECTION 3

STARTING AND DRIVING

Before starting the engine 140
How to start the engine 140
Tips for driving in various conditionsns 141
Winter driving tips 142
Dinghy towing 143
Trailer towing 145
How to save fuel and make your vehicle last longer, too 150

Before starting the engine

1. Check the area around the vehicle before entering it.
2. Adjust seat position, seatback angle, seat cushion angle and steering wheel angle.
3. Adjust the inside and outside rear view mirrors.
4. Lock both side doors.
5. Fasten seat belts.

How to start the engine— (a) Before cranking

1. Apply the parking brake firmly.
2. Turn off unnecessary lights and accessories.
3. Manual transmission: Press the clutch pedal to the floor and shift the transmission into neutral. Hold the clutch pedal to the floor until the engine is started. A starter safety device will prevent the starter from operating if the clutch pedal is not fully depressed.

   Automatic transmission: Put the selector lever in "P". If you need to restart the engine while the vehicle is moving, put the selector lever in "N". A starter safety device will prevent the starter from operating if the selector lever is in any drive position.
4. Automatic transmission only: Depress the brake pedal and hold it to the floor until driving off.

(b) Starting the engine

Before starting the engine, be sure to follow the instructions in "(a) Before cranking".

Normal starting procedure

The multiport fuel injection system/sequential multiport fuel injection system in your engine automatically controls the proper air-fuel mixture for starting. You can start a cold or hot engine as follows:

1. With your foot off the accelerator pedal, crank the engine by turning the key to "START". Release it when the engine starts.
2. After the engine runs for about 10 seconds, you are ready to drive.

If the weather is below freezing, let the engine warm up for a few minutes before driving.

If the engine stalls...

Simply restart it, using the correct procedure given in normal starting.

If the engine will not start...

See "If your vehicle will not start" in Section 4.

NOTICE

- Do not crank for more than 30 seconds at a time. This may overheat the starter and wiring systems.
- Do not race a cold engine.
- If the engine becomes difficult to start or stalls frequently, have the engine checked immediately.

Tips for driving in various conditions

- Always slow down in gusty crosswinds. This will allow you much better control.
- Drive slowly onto curbs and, if possible, at a right angle. Avoid driving onto high, sharp-edged objects and other road hazards. Failure to do so can lead to severe tire damage resulting in tire bursts.
- When parking on a hill, turn the front wheels until they touch the curb so that the vehicle will not roll. Apply the parking brake, and place the transmission in “P” (automatic) or in first or reverse (manual). If necessary, block the wheels.
- Washing your vehicle or driving through deep water may get the brakes wet. To see whether they are wet, check that there is no traffic near you, and then press the pedal lightly. If you do not feel a normal braking force, the brakes are probably wet. To dry them, drive the vehicle cautiously while lightly pressing the brake pedal with the parking brake applied. If they still do not work safely, pull to the side of the road and call a Toyota dealer for assistance.

CAUTION

- Before driving off, make sure that the parking brake is fully released and the parking brake reminder light is off.
- Do not leave your vehicle unattended while the engine is running.
- Do not rest your foot on the brake pedal while driving. It can cause dangerous overheating, needless wear, and poor fuel economy.
- To drive down a long or steep hill, reduce your speed and downshift. Remember, if you ride the brakes excessively, they may overheat and not work properly.
- Be careful when accelerating, upshifting, downshifting or braking on a slippery surface. Sudden acceleration or engine braking, could cause the vehicle to spin or skid.

- Do not drive in excess of the speed limit. Even if the legal speed limit permits it, do not drive over 140 km/h (85 mph) unless your vehicle has high-speed capability tires. Driving over 140 km/h (85 mph) may result in tire failure, loss of control and possible injury. Be sure to consult a tire dealer to determine whether the tires on your vehicle are high-speed capability tires or not before driving at such speeds.
- Do not continue normal driving when the brakes are wet. If they are wet, your vehicle will require a longer stopping distance, and it may pull to one side when the brakes are applied. Also, the parking brake will not hold the vehicle securely.

Winter driving tips

Make sure you have a proper freeze protection of engine coolant.

Your coolant must contain ethylene-glycol type coolant for a proper corrosion protection of aluminum components. Use "TOYOTA Long Life Coolant" or equivalent.

See Section 7-2 for details about coolant type selection.

NOTICE

Do not use alcohol type antifreeze or plain water alone.

When it is extremely cold, we recommend to use 60% solution for your Toyota, to provide protection down to about -50°C (-58°F). Do not use more than 70% solution for better coolant performance.

Check the condition of the battery and cables.

Cold temperatures reduce the capacity of any battery, so it must be in top shape to provide enough power for winter starting. Section 7-3 tells you how to visually inspect the battery. Your Toyota dealer and most service stations will be pleased to check the level of charge.

Make sure the engine oil viscosity is suitable for the cold weather.

See Section 7-2 for recommended viscosity. Leaving a heavy summer oil in your vehicle during winter months may cause harder starting. If you are not sure about which oil to use, call your Toyota dealer—he will be pleased to help.

Keep the door locks from freezing.

Squirt lock de-icer or glycerine into the locks to keep them from freezing. To open a frozen lock, try heating the key before inserting it.

Use a washer fluid containing an antifreeze solution.

This product is available at your Toyota dealer and most auto parts stores. Follow the manufacturer's directions for how much to mix with water.

NOTICE

Do not use engine antifreeze or any other substitute because it may damage your vehicle's paint.

Do not use your parking brake when there is a possibility it could freeze.

When parking, put the transmission into “P” (automatic) or into first or reverse (manual) and block the rear wheels. Do not use the parking brake, or snow or water accumulated in and around the parking brake mechanism may freeze, making it hard to release.

Keep ice and snow from accumulating under the fenders.

Ice and snow built up under your fenders can make steering difficult. During bad winter driving, stop and check under the fenders occasionally.

Depending on where you are driving, we recommend you carry some emergency equipment.

Some of the things you might put in the vehicle are tire chains, window scraper, bag of sand or salt, flares, small shovel, jumper cables, etc.

NOTICE

Do not use window scraper or deicer when the plastic resin moon roof is heavily coated with frost or ice. The plastic resin moon roof is easily damaged.

Dinghy towing (1ZZ-FE engine with automatic transmission)

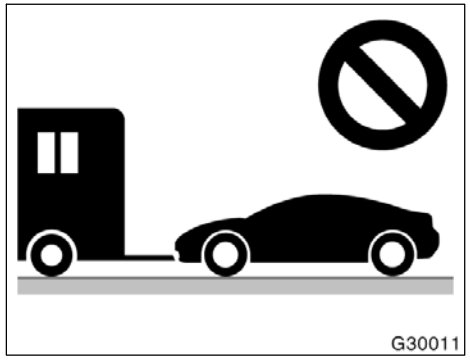

Your vehicle is not designed to be dinghy towed (with four wheels on the ground) behind a motorhome.

NOTICE

Do not tow your vehicle with four wheels on the ground. This may cause serious damage to your vehicle.

Dinghy towing (Except 1ZZ-FE engine with automatic transmission)

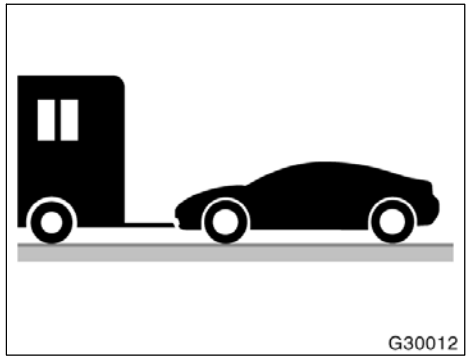

Your vehicle can be dinghy towed (with four wheels on the ground) from the front behind a motorhome.

⚠ CAUTION

Dinghy towing requires special equipment and accessories. Please refer to your service outlet of the motorhome manufacture for the recommended equipment.

NOTICE

Dinghy towing does not eliminate the possibility of damage to your vehicle.

DINGHY TOWING TIPS

Before dinghy towing, be sure to observe the following in order to reduce the damage to your vehicle.

With automatic transmission (2ZZ-FE engine only)—

1. Turn the ignition switch to the "ON" position.
2. Shift the selector lever into the "N" position.
3. Turn the ignition switch to the "ACC" position. Make sure the audio is turned off and any item is not plugged into the power outlet.

NOTICE

To avoid the locking of the steering wheel, turn the ignition switch to the "ACC" position.

4. Release the parking brake.

NOTICE

To prevent the vehicle from being damaged, observe following.

- Do not tow the vehicle at the vehicle speed more than 88 km/h (55 mph).
- Do not tow the vehicle for more than 320 km (200 miles).

After dinghy towing or at the recommended distance limit, let the engine idle for more than 3 minutes before driving the vehicle or resuming towing.

With manual transmission—

1. Put the shift lever in neutral.
2. Turn the ignition switch to the "ACC" position. Make sure the audio is turned off and any item is not plugged into the power outlet.

NOTICE

To avoid the locking of the steering wheel, turn the ignition switch to the "ACC" position.

3. Release the parking brake.

After dinghy towing, let the engine idle for more than 3 minutes before driving the vehicle.

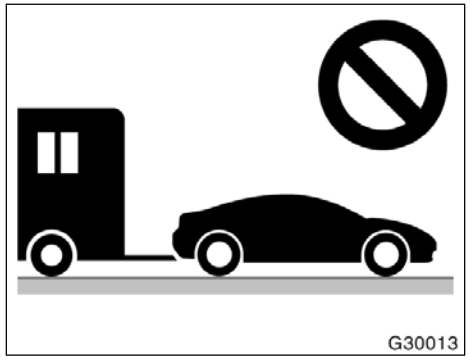

NOTICE

Do not tow your vehicle from the rear. This may cause serious damage to your vehicle.

Trailer towing

Your vehicle is designed primarily as a passenger-carrying vehicle. Towing a trailer will have an adverse effect on handling, performance, braking, durability and driving economy (fuel consumption, etc.). Your safety and satisfaction depend on the proper use of correct equipment and cautious driving habits. For your safety and the safety of others, you must not overload your vehicle or trailer. Toyota warranties do not apply to damage or malfunction caused by towing a trailer for commercial purposes. Ask your local Toyota dealer for further details before towing.

WEIGHT LIMITS

Before towing, make sure the total trailer weight, gross vehicle weight, gross axle weight and trailer tongue load are all within the limits.

The total trailer weight and tongue load can be measured with platform scales found at a highway weighing station, building supply company, trucking company, junk yard, etc.

CAUTION

- The total trailer weight (trailer weight plus its cargo load) must not exceed 907 kg (2000 lb.). Exceeding this weight is dangerous.

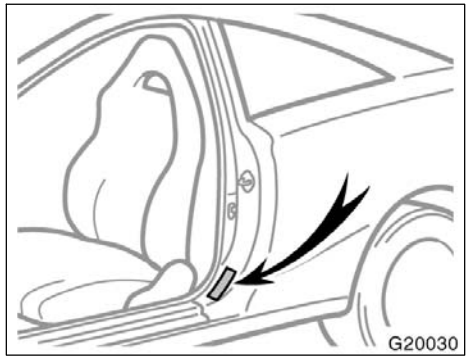

- Trailer hitch assemblies have different weight capacities established by the hitch manufacturer. Even though the vehicle may be physically capable of towing a higher weight, the operator must determine the maximum weight rating of the particular hitch assembly and never exceed the maximum weight rating specified for the trailer-hitch. Exceeding the maximum weight rating set by the trailer hitch manufacturer can cause an accident resulting in serious personal injuries.

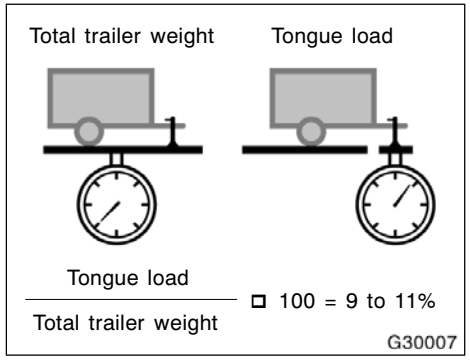

- The gross vehicle weight must not exceed the Gross Vehicle Weight Rating (GVWR) indicated on the Certification Label. The gross vehicle weight is the sum of weights of the unloaded vehicle, driver, passengers, luggage, hitch and trailer tongue load. It also includes the weight of any special equipment installed on your vehicle.
- The load on either the front or rear axle resulting from distribution of the gross vehicle weight on both axles must not exceed the Gross Axle Weight Rating (GAWR) listed on the Certification Label.

- The trailer cargo load should be distributed so that the tongue load is 9 to 11% of the total trailer weight, not exceeding the maximum of 90 kg (200 lb.). Never load the trailer with more weight in the back than in the front. About 60% of the trailer load should be in the front half of the trailer and the remaining 40% in the rear.

HITCHES

- Use only a hitch which is recommended by the hitch manufacturer and conforms to the total trailer weight requirement.
- Follow the directions supplied by the hitch manufacturer, and bolt the hitch securely to the rear bumper. Lubricate the hitch ball with a light coat of grease.

- Toyota recommends removing the trailer hitch whenever you are not towing a trailer to reduce the possibility of additional damage caused by the hitch if your vehicle is struck from behind. After removing the hitch, seal any mounting holes in the vehicle body to prevent entry of pollutants such as exhaust fumes, dirt, water, etc.

NOTICE

Do not use axle-mounted hitches as they can cause damage to the axle housing, wheel bearings, wheels or tires. Also, never install a hitch which may interfere with the normal function of an Energy Absorbing Bumper.

BRAKES AND SAFETY CHAINS

- Toyota recommends trailers with brakes that conform to any applicable federal and state/provincial regulations.
- A safety chain must always be used between the towing vehicle and the trailer. Leave sufficient slack in the chain for turns. The chain should cross under the trailer tongue to prevent the tongue from dropping to the ground in case it becomes damaged or separated. For correct safety chain procedures, follow the hitch or trailer manufacturer’s recommendations.

⚠ CAUTION

- If the total trailer weight exceeds 453 kg (1000 lb.), trailer brakes are required.
- Never tap into your vehicle’s hydraulic system as it would lower its braking effectiveness.
- Never tow a trailer without using a safety chain securely attached to both the trailer and the vehicle. If damage occurs to the coupling unit or hitch ball, there is danger of the trailer wandering over into another lane.

TIRES

- Ensure that your vehicle’s tires are properly inflated. See Section 7-2 for instructions.
- The trailer tires should be inflated to the pressure recommended by the trailer manufacturer in respect to the total trailer weight.

TRAILER LIGHTS

- Trailer lights must comply with federal, state/provincial and local regulations. See your local recreational vehicle dealer or rental agency for the correct type of wiring and relays for your trailer. Check for correct operation of the turn signals and stop lights each time you hitch up. Direct splicing may damage your vehicle’s electrical system and cause a malfunction of your lights.

BREAK-IN SCHEDULE

- Toyota recommends that you do not tow a trailer with a new vehicle or a vehicle with any new power train component (engine, transmission, differential, wheel bearing, etc.) for the first 800 km (500 miles) of driving.

MAINTENANCE

- If you tow a trailer, your vehicle will require more frequent maintenance due to the additional load. For this information, please refer to the scheduled maintenance information in the “Scheduled Maintenance Guide” or “Owner’s Manual Supplement”.
- Retighten all fixing bolts of the towing ball and bracket after approximately 1000 km (600 miles) of trailer driving.

PRE-TOWING SAFETY CHECK

- Check that your vehicle remains a level when a loaded or unloaded trailer is hitched. Do not drive if the vehicle has an abnormal nose-up or nose-down condition, and check for improper tongue load, overload, worn suspension or other possible causes.
- Make sure the trailer cargo is securely loaded so that it can not shift.
- Check that your rear view mirrors conform to any applicable federal, state/provincial or local regulations. If not, install the rear view mirrors required for towing purpose.

TRAILER TOWING TIPS

When towing a trailer, your vehicle will handle differently than when not towing. The three main causes of vehicle-trailer accidents are driver error, excessive speed and improper trailer loading. Keep these in mind when towing:

- Before starting out, check operation of the lights and all vehicle-trailer connections. After driving a short distance, stop and recheck the lights and connections. Before actually towing a trailer, practice turning, stopping and backing with a trailer in an area away from traffic until you learn the feel.
- Backing with a trailer is difficult and requires practice. Grip the bottom of the steering wheel and move your hand to the left to move the trailer to the left. Move your hand to the right to move the trailer to the right. (This procedure is generally opposite to that when backing without a trailer.) Also, just turn the steering wheel a little at a time, avoiding sharp or prolonged turning. Have someone guide you when backing to reduce the risk of an accident.
- Because stopping distance may be increased, vehicle-to-vehicle distance should be increased when towing a trailer. For each 16 km/h (10 mph) of speed, allow at least one vehicle and trailer length between you and the vehicle ahead. Avoid sudden braking as you may skid, resulting in jackknifing and loss of control. This is especially true on wet or slippery surfaces.
- Avoid jerky starts or sudden acceleration. If your vehicle has a manual transmission, prevent excessive clutch slippage by keeping engine rpm low and not racing the engine. Always start out in first gear.
- Avoid jerky steering and sharp turns. The trailer could hit your vehicle in a tight turn. Slow down before making a turn to avoid the necessity of sudden braking.
- Remember that when making a turn, the trailer wheels will be closer than the vehicle wheels to the inside of the turn. Therefore, compensate for this by making a larger than normal turning radius with your vehicle.

- Crosswinds and rough roads will adversely affect handling of your vehicle and trailer, causing sway. Pay attention to the rear from time to time to prepare yourself for being passed by large trucks or buses, which may cause your vehicle and trailer to sway. If swaying happens, firmly grip the steering wheel and reduce speed immediately but gradually. Never increase speed. Steer straight ahead. If you make no extreme correction with the steering or brakes, the vehicle and trailer will stabilize.
- Be careful when passing other vehicles. Passing requires considerable distance. After passing a vehicle, do not forget the length of your trailer and be sure you have plenty of room before changing lanes.
- In order to maintain engine braking efficiency do not use fifth gear (5-speed manual transmission), sixth gear (6-speed manual transmission) or overdrive (automatic transmission).
- Because of the added load of the trailer, your vehicle’s engine may overheat on hot days (at temperatures over 30°C [85°F]) when going up a long or steep grade with a trailer. If the engine coolant temperature gauge indicates overheating, immediately turn off the air conditioning (if in use), pull off the road and stop in a safe spot. Refer to “If your vehicle overheats” in Section 4.
- Always place wheel blocks under both the vehicle and trailer wheels when parking. Apply the parking brake firmly. Put the transmission in “P” (automatic) or in first or reverse (manual). Avoid parking on a slope with a trailer, but if it cannot be avoided, do so only after performing the following:

1. Apply the brakes and hold.
2. Have someone place wheel blocks under both the vehicle and trailer wheels.
3. When the wheel blocks are in place, release your brakes slowly until the blocks absorb the load.
4. Apply the parking brake firmly.
5. Shift into first or reverse (manual) or “P” (automatic) and turn off the engine.

When restarting out after parking on a slope:

1. With the transmission in “P” position (automatic) or the clutch pedal depressed (manual), start the engine. (With an automatic transmission, be sure to keep the brake pedal depressed.)
2. Shift into gear.
3. Release the parking brake (also foot brake on automatic transmission vehicles) and slowly pull or back away from the wheel blocks. Stop and apply your brakes.
4. Have someone retrieve the blocks.

CAUTION

- Do not exceed 72 km/h (45 mph) or the posted towing speed limit, whichever is lower. Because instability (swaying) of a towing vehicle-trailer combination usually increases as the speed increases, exceeding 72 km/h (45 mph) may cause loss of control.
- Slow down and downshift before descending steep or long downhill grades. Do not make sudden downshifts.
- Avoid holding the brake pedal down too long or too frequently. This could cause the brakes to overheat and result in reduced braking efficiency.

How to save fuel and make your vehicle last longer, too

Getting more kilometers/mileage from a liter/gallon of fuel is easy—just take it easy. It will help make your vehicle last longer, too. Here are some specific tips on how to save money on both fuel and repairs:

- Keep your tires inflated at the correct pressure. Underinflation causes tire wear and wastes fuel. See Section 7-2 for instructions.
- Do not carry unneeded weight in your vehicle. Excess weight puts a heavier load on the engine, causing greater fuel consumption.
- Avoid lengthy warm-up idling. Once the engine is running smoothly, begin driving—but gently. Remember, however, that on cold winter days this may take a little longer.
- Keep the automatic transmission overdrive turned on when engine braking is not required. Driving with the overdrive off will reduce the fuel economy. (For details, see “Automatic transmission” in Section 1-6.)
- Accelerate slowly and smoothly. Avoid jackrabbit starts. Get into high gear as quickly as possible.
- Avoid long engine idling. If you have a long wait and you are not in traffic, it is better to turn off the engine and start again later.
- Avoid engine lugging or over-revving. Use a gear position suitable for the road on which you are travelling.
- Avoid continuous speeding up and slowing down. Stop-and-go driving wastes fuel.
- Avoid unnecessary stopping and braking. Maintain a steady pace. Try to time the traffic signals so you only need to stop as little as possible or take advantage of through streets to avoid traffic lights. Keep a proper distance from other vehicles to avoid sudden braking. This will also reduce wear on your brakes.
- Avoid heavy traffic or traffic jams whenever possible.
- Do not rest your foot on the clutch or brake pedal. This causes premature wear, overheating and poor fuel economy.
- Maintain a moderate speed on highways. The faster you drive, the greater the fuel consumption. By reducing your speed, you will cut down on fuel consumption.

- Keep the front wheels in proper alignment. Avoid hitting the curb and slow down on rough roads. Improper alignment not only causes faster tire wear but also puts an extra load on the engine, which, in turn, wastes fuel.
- Keep the bottom of your vehicle free from mud, etc. This not only lessens weight but also helps prevent corrosion.
- Keep your vehicle tuned-up and in top shape. A dirty air cleaner, improper valve clearance, dirty plugs, dirty oil and grease, brakes not adjusted, etc. all lower engine performance and contribute to poor fuel economy. For longer life of all parts and lower operating costs, keep all maintenance work on schedule, and if you often drive under severe conditions, see that your vehicle receives more frequent maintenance. (For scheduled maintenance information, please refer to the “Scheduled Maintenance Guide” or “Owner’s Manual Supplement”.)

CAUTION

Never turn off the engine to coast down hills. Your power steering and brake booster will not function without the engine running. Also, the emission control system operates properly only when the engine is running.

SECTION 4

IN CASE OF AN EMERGENCY

If your vehicle will not start 154
If your engine stalls while drivingng 157
If your vehicle overheats 157
If you have a flat tire 158
If your vehicle needs to be towedded 167
If you cannot shift automatic transmission selector leverer 170
If you lose your keys 171
If you lose your wireless remote control transmitter 171

If your vehicle will not start—

(a) Simple checks

Before making these checks, make sure you have followed the correct starting procedure given in “How to start the engine” in Section 3 and that you have sufficient fuel.

If the engine is not turning over or is turning over too slowly—

1. Check that the battery terminals are tight and clean.
2. If the battery terminals are O.K., switch on the interior light.
3. If the light is out, dim or goes out when the starter is cranked, the battery is discharged. You may try jump starting. See “(c) Jump starting” for further instructions.

If the light is O.K., but the engine still will not start, it needs adjustment or repair. Call a Toyota dealer or qualified repair shop.

NOTICE
Do not pull- or push-start the vehicle. It may damage the vehicle or cause a collision when the engine starts. Also the three-way catalytic converter may overheat and become a fire hazard.

If the engine turns over at its normal speed but will not start—

1. Turn the ignition key to “ACC” or “LOCK” and try starting the engine again.
2. If the engine will not start, the engine may be flooded because of repeated cranking. See “(b) Starting a flooded engine” for further instructions.
3. If the engine still will not start, it needs adjustment or repair. Call a Toyota dealer or qualified repair shop.

(b) Starting a flooded engine

If the engine will not start, your engine may be flooded because of repeated cranking.

If this happens, turn the key to “START” with the accelerator pedal held down. Keep the key and accelerator pedal so for 15 seconds and release them. Then try starting the engine with your foot off the accelerator pedal.

If the engine does not start after 15 seconds of cranking, release the key, wait a few minutes and try again.

If the engine still will not start, it needs adjustment or repair. Call a Toyota dealer or qualified repair shop for assistance.

NOTICE
Do not crank for more than 30 seconds at a time. This may overheat the starter and wiring systems.

(c) Jump starting

To avoid serious personal injury and damage to your vehicle which might result from battery explosion, acid burns, electrical burns, or damaged electronic components, these instructions must be followed precisely.

If you are unsure about how to follow this procedure, we strongly recommend that you seek the help of a competent mechanic or towing service.

CAUTION

- Batteries contain sulfuric acid which is poisonous and corrosive. Wear protective safety glasses when jump starting, and avoid spilling acid on your skin, clothing, or vehicle.
- If you should accidentally get acid on yourself or in your eyes, remove any contaminated clothing and flush the affected area with water immediately. Then get immediate medical attention. If possible, continue to apply water with a sponge or cloth while en route to the medical office.
- The gas normally produced by a battery will explode if a flame or spark is brought near. Use only standardized jumper cables and do not smoke or light a match while jump starting.

NOTICE

The battery used for boosting must be 12 V. Do not jump start unless you are sure that the booster battery is correct.

JUMP STARTING PROCEDURE

1. If the booster battery is installed in another vehicle, make sure the vehicles are not touching. Turn off all unnecessary lights and accessories.
2. If required, remove all the vent plugs from the booster and discharged batteries. Lay a cloth over the open vents on the batteries. (This helps reduce the explosion hazard, personal injuries and burns.)
3. If the engine in the vehicle with the booster battery is not running, start it and let it run for a few minutes. During jump starting, run the engine at about 2000 rpm with the accelerator pedal lightly depressed.

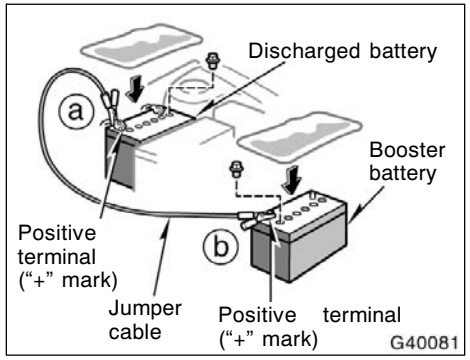

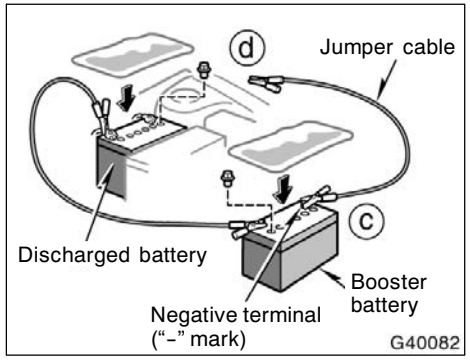

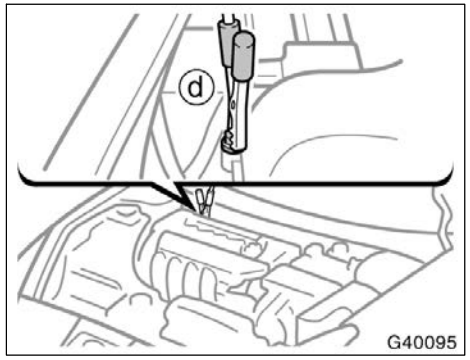

Connecting point

4. Make the cable connections in the order a, b, c, d.

   a. Connect the clamp of the positive (red) jumper cable to the positive (+) terminal on the discharged battery.

   b. Connect the clamp at the other end of the positive (red) jumper cable to the positive (+) terminal on the booster battery.

   c. Connect the clamp of the negative (black) jumper cable to the negative (–) terminal on the booster battery.

   d. Connect the clamp at the other end of the negative (black) jumper cable to a solid, stationary, unpainted, metallic point of the vehicle with the discharged battery.

   The recommended connecting point is shown in the following illustration:

   Do not connect the cable to or near any part that moves when the engine is cranked.

⚠ CAUTION

When making the connections, to avoid serious injury, do not lean over the battery or accidentally let the jumper cables or clamps touch anything except the correct battery terminals or the ground.

5. Start your engine in the normal way. After starting, run it at about 2000 rpm for several minutes with the accelerator pedal lightly depressed.
6. Carefully disconnect the cables in the exact reverse order: the negative cable and then the positive cable.
7. Carefully dispose of the battery cover cloths—they may now contain sulfuric acid.
8. If removed, replace all the battery vent plugs.

If the cause of your battery discharging is not apparent (for example, lights left on), you should have it checked.

If your engine stalls while driving

If your engine stalls while driving...

1. Reduce your speed gradually, keeping a straight line. Move cautiously off the road to a safe place.
2. Turn on your emergency flashers.
3. Turn the ignition key to “ACC” or “LOCK”, and try starting the engine again.

If the engine will not start, see “If your vehicle will not start” in this section.

⚠ CAUTION

If the engine is not running, the power assist for the brakes and steering will not work so steering and braking will be much harder than usual.

If your vehicle overheats

If your engine coolant temperature gauge indicates overheating, if you experience a loss of power, or if you hear a loud knocking or pinging noise, the engine has probably overheated. You should follow this procedure...

1. Pull safely off the road, stop the vehicle and turn on your emergency flashers. Put the transmission in “P” (automatic) or neutral (manual) and apply the parking brake. Turn off the air conditioning if it is being used.
2. If coolant or steam is boiling out of the radiator or reservoir, stop the engine. Wait until the steam subsides before opening the hood. If there is no coolant boiling over or steam, leave the engine running and make sure the electric cooling fan is operating. If it is not, turn the ignition off.

⚠ CAUTION

To help avoid personal injury, keep the hood closed until there is no steam. Escaping steam or coolant is a sign of very high pressure.

3. Look for obvious coolant leaks from the radiator, hoses, and under the vehicle. However, note that water draining from the air conditioning is normal if it has been used.

CAUTION

When the engine is running, keep hands and clothing away from the moving fan and engine drive belts.

4. If the coolant is leaking, stop the engine immediately. Call a Toyota dealer for assistance.
5. If there are no obvious leaks, check the coolant reservoir.

   If it is dry, call a Toyota dealer for assistance as soon as possible.

   If there is enough coolant in the reservoir, again check the coolant level in the reservoir after the engine coolant temperature has cooled to normal. Serious coolant loss indicates a leak in the system. You should have it checked as soon as possible at you Toyota dealer.

CAUTION

Do not attempt to touch the coolant reservoir tank when the engine and radiator are hot. Serious injury could result from scalding hot fluid and steam blown out under pressure.

If you have a flat tire—

1. Reduce your speed gradually, keeping a straight line. Move cautiously off the road to a safe place well away from the traffic. Avoid stopping on the center divider of a highway. Park on a level spot with firm ground.
2. Stop the engine and turn on your emergency flashers.
3. Firmly set the parking brake and put the transmission in “P” (automatic) or reverse (manual).
4. Have everyone get out of the vehicle on the side away from traffic.
5. Read the following instructions thoroughly.

CAUTION

When jacking, be sure to observe the following to reduce the possibility of personal injury:

- Follow jacking instructions.
- Do not put any part of your body under the vehicle supported by the jack. Personal injury may occur.
- Do not start or run the engine while your vehicle is supported by the jack.

- Stop the vehicle on a level firm ground, firmly set the parking brake and put the transmission in “P” (automatic) or reverse (manual). Block the wheel diagonally opposite to the one being changed if necessary.
- Make sure to set the jack properly in the jack point. Raising the vehicle with jack improperly positioned will damage the vehicle or may allow the vehicle to fall off the jack and cause personal injury.
- Never get under the vehicle when the vehicle is supported by the jack alone.
- Use the jack only for lifting your vehicle during wheel changing.
- Do not raise the vehicle with someone in the vehicle.
- When raising the vehicle, do not put an object on or under the jack.
- Raise the vehicle only high enough to remove and change the tire.

NOTICE

Do not continue driving with a deflated tire. Driving even a short distance can damage a tire and wheel beyond repair.

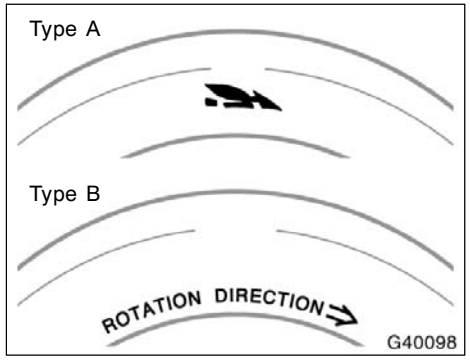

Spare tire with turning direction indicators (some models)

The spare tires with turning direction indicators (arrows) are uni-directional and intended to be used so that they turn in the same direction as the turning direction indicators (arrows).

Installing the wheel on the driver side of the vehicle will not affect tire performance. If the spare tire is used on the driver side of the vehicle, it should be used only temporarily and then replaced with the correct one.

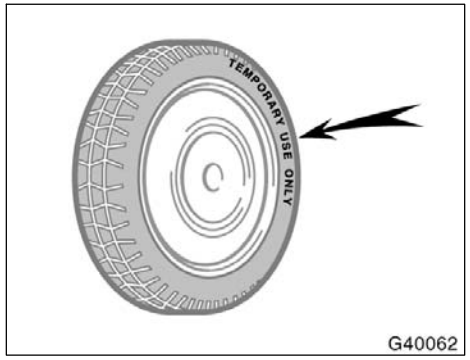

Compact spare tire

The compact spare tire is designed for temporary emergency use only.

The compact spare tire is identified by the distinctive wheel design and color and special wording “TEMPORARY USE ONLY” molded into the side wall of the tire.

The standard tire should be repaired and replaced as soon as possible.

The compact spare tire saves space in your trunk or luggage compartment, and its lighter weight helps to improve fuel economy and permits easier installation in case of a flat tire.

The compact spare tire can be used many times, if necessary. It has tread life of up to 4800 km (3000 miles) depending on road conditions and your driving habits. When tread wear indicators appear on the tire, replace the tire.

See also the tire section in Section 7-2 for details on the tread wear indicators and other service information.

CAUTION

- The compact spare tire was designed especially for your Toyota. Do not use it on any other vehicle.
- Do not exceed 80 km/h (50 mph) when driving with the compact spare tire.
- Avoid sudden acceleration, sudden deceleration and sharp turns with the compact spare tire.

NOTICE

Your ground clearance is reduced when the compact spare tire is installed so avoid driving over obstacles and drive slowly on rough, unpaved roads and speed bumps. Also, do not attempt to go through an automatic car wash as the vehicle may get caught, resulting in damage.

—Required tools and spare tire

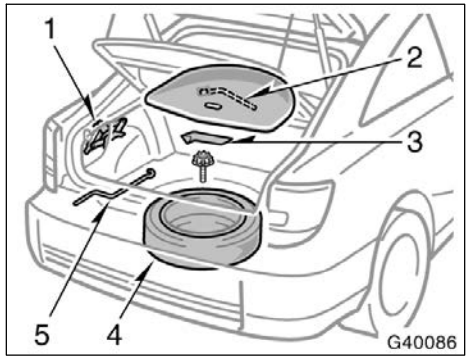

With a compact spare tire

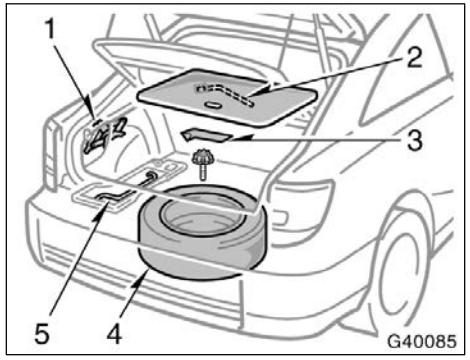

Without a compact spare tire

1. Get the required tools and spare tire.

   1 Jack
   2 Wheel nut wrench
   3 Tool bag
   4 Spare tire
   5 Jack handle

To prepare yourself for an emergency, you should familiarize yourself with the use of the jack, each of the tools and their storage locations.

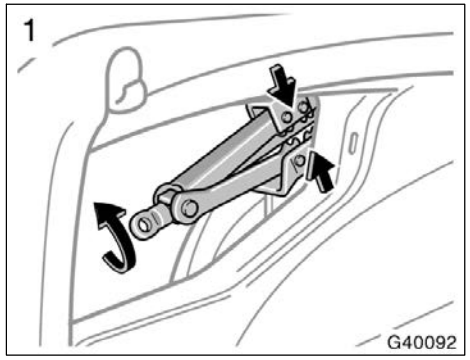

To remove the jack:

1. Turn the jack joint by hand until the jack becomes free.

⚠ CAUTION

When removing the jack, be careful not to injure your hands with the edge of the trim.

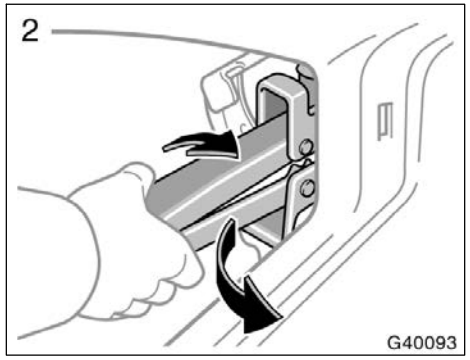

2. Twist the jack head clockwise and pull out the jack.

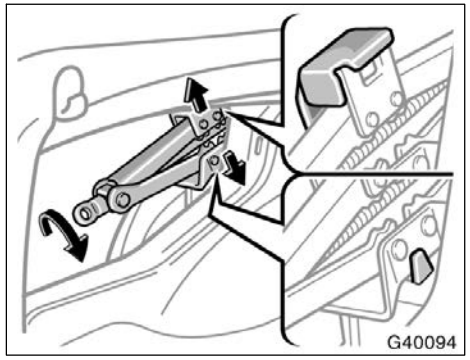

To store the jack, put the jack base on the fitting place. Turn the joint until the jack upper side fits securely with the protrusion of the carrier.

This prevents the jack from flying forward during a collision or sudden braking.

⚠ CAUTION

When storing the jack, be careful not to injure your hands with the edge of the trim.

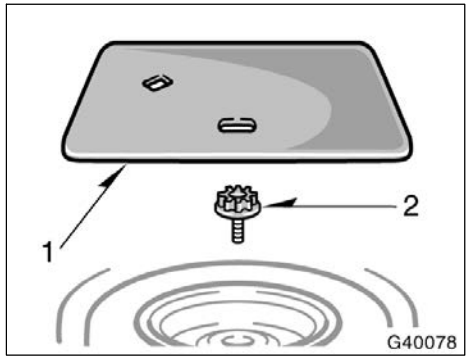

To remove the spare tire:

1. Remove the spare tire cover.
2. Loosen the bolt and remove it.

Then take the spare tire out of the vehicle.

When storing the spare tire, put it in place with the inner side of the wheel facing up. Then secure the tire by repeating the above removal steps in reverse order to prevent it from flying forward during a collision or sudden braking.

—Blocking the wheel

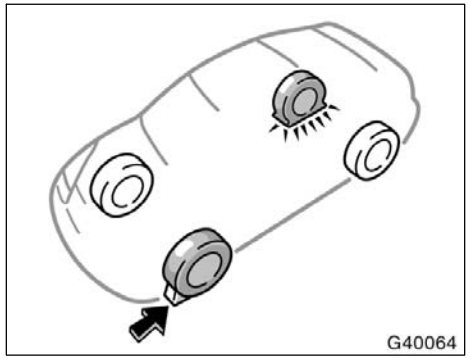

2. Block the wheel diagonally opposite the flat tire to keep the vehicle from rolling when it is jacked up.

When blocking the wheel, place a wheel block from the front for the front wheels or from the rear for the rear wheels.

—Removing wheel ornament

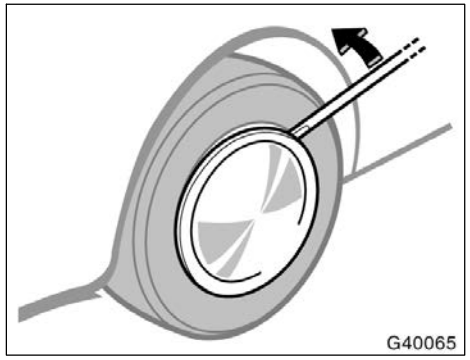

Steel wheels

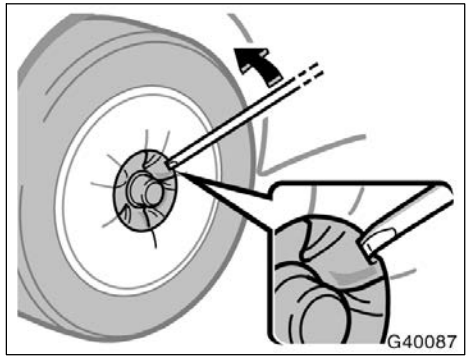

Aluminum wheels

3. Remove the wheel ornament.

Pry off the wheel ornament, using the beveled end of the wheel nut wrench as shown.

⚠ CAUTION

Do not try to pull off the ornament by hand. Take due care in handling the ornament to avoid unexpected personal injury.

—Loosening wheel nuts

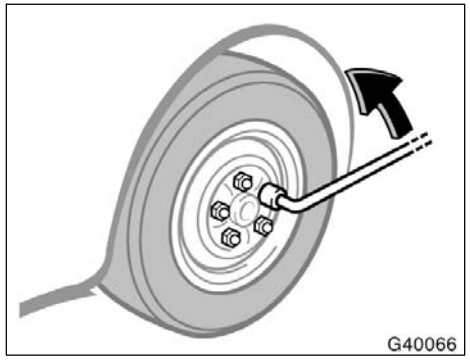

4. Loosen all the wheel nuts.

Always loosen the wheel nuts before raising the vehicle.

Turn the wheel nuts counterclockwise to loosen. To get maximum leverage, fit the wrench to the nut so that the handle is on the right side, as shown above. Grab the wrench near the end of the handle and pull up on the handle. Be careful that the wrench does not slip off the nut.

Do not remove the nuts yet—just unscrew them about one—half turn.

—Positioning the jack

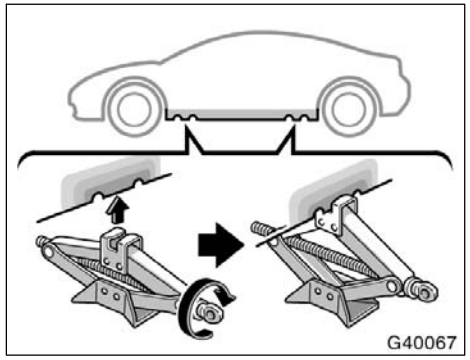

5. Position the jack at the correct jack point as shown.

Make sure the jack is positioned on a level and solid place.

—Raising your vehicle

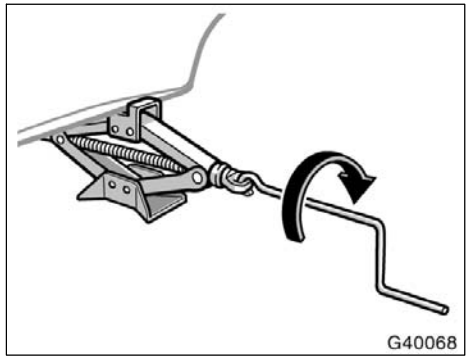

6. After making sure that no one is in the vehicle, raise it high enough so that the spare tire can be installed.

Remember you will need more ground clearance when putting on the spare tire than when removing the flat tire.

To raise the vehicle, insert the jack handle into the jack (it is a loose fit) and turn it clockwise. As the jack touches the vehicle and begins to lift, double-check that it is properly positioned.

⚠ CAUTION

Never get under the vehicle when the vehicle is supported by the jack alone.

—Changing wheels

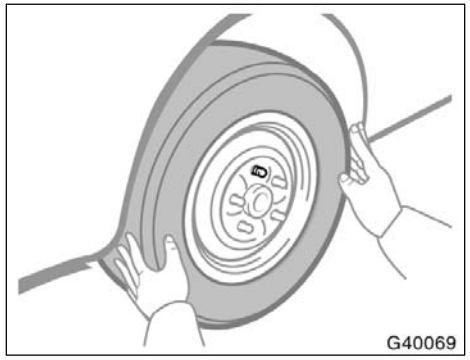

7. Remove the wheel nuts and change tires.

Lift the flat tire straight off and put it aside.

Roll the spare wheel into position and align the holes in the wheel with the bolts. Then lift up the wheel and get at least the top bolt started through its hole. Wiggle the tire and press it back over the other bolts.

Before putting on wheels, remove any corrosion on the mounting surfaces with a wire brush or such. Installation of wheels without good metal-to-metal contact at the mounting surface can cause wheel nuts to loosen and eventually cause a wheel to come off while driving. Therefore after the first 1600 km (1000 miles), check to see that the wheel nuts are tight.

—Reinstalling wheel nuts

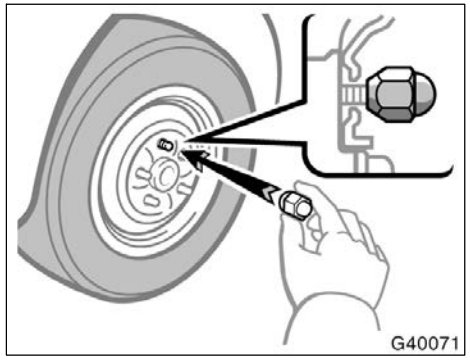

8. Reinstall all the wheel nuts finger tight.

Reinstall the wheel nuts (tapered end inward) and tighten them as much as you can by hand. Press back on the tire back and see if you can tighten them more.

—Lowering your vehicle

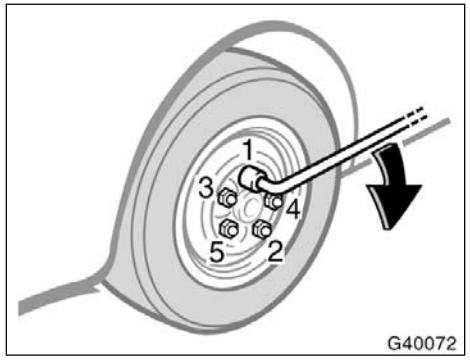

9. Lower the vehicle completely and tighten the wheel nuts.

Turn the jack handle counterclockwise to lower the vehicle.

Use only the wheel nut wrench and turn it clockwise to tighten the nuts. Do not use other tools or any additional leverage other than your hands, such as a hammer, pipe or your foot. Make sure the wrench is securely engaged over the nut.

Tighten each nut a little at a time in the order shown. Repeat the process until all the nuts are tight.

⚠ CAUTION

When lowering the vehicle, make sure all portions of your body and all other persons around will not be injured as the vehicle is lowered to the ground.

—Reinstalling wheel ornament

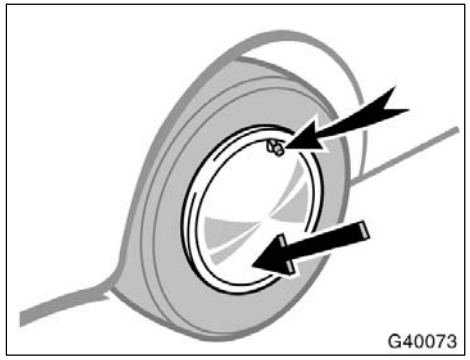

Steel wheels

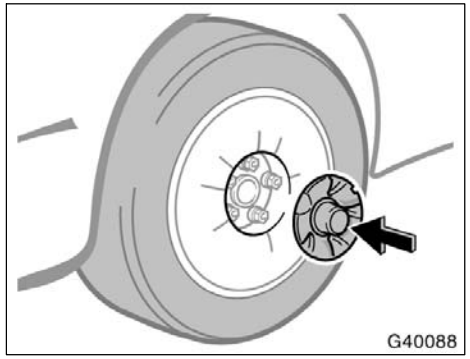

Aluminum wheels

10. Reinstall the wheel ornament.
    1. Put the wheel ornament into position.

    Steel wheels—Align the cutout of the wheel ornament with the valve stem as shown.

    2. Then tap it firmly with the side or heel of your hand to snap it into place.

⚠ CAUTION

Take due care in handling the ornament to avoid unexpected personal injury.

—After changing wheels

11. Check the air pressure of the replaced tire.

Adjust the air pressure to the specification designated in Section 8. If the pressure is lower, drive slowly to the nearest service station and fill to the correct pressure.

Do not forget to reinstall the tire inflation valve cap as dirt and moisture could get into the valve core and possibly cause air leakage. If the cap is missing, have a new one put on as soon as possible.

12. Restow all the tools, jack and flat tire securely.

As soon after changing wheels as possible, tighten the wheel nuts to the torque specified in Section 8 with a torque wrench. Have a technician repair the flat tire and replace the spare tire with it.

⚠ CAUTION

Before driving, make sure all the tools, jack and flat tire are securely in place in their storage location to reduce the possibility of personal injury during a collision or sudden braking.

If your vehicle needs to be towed—

(a) Towing with wheel lift type truck—

—From front

—From rear

(b) Using flat bed truck

G40100

If towing is necessary, we recommend you to have it done by your Toyota dealer or a commercial tow truck service. In consultation with them, have your vehicle towed using either (a) or (b).

Only when you cannot receive a towing service from a Toyota dealer or commercial tow truck service, tow your vehicle carefully in accordance with the instructions given in “—Emergency towing” in this section.

Proper equipment will help ensure that your vehicle is not damaged while being towed. Commercial operators are generally aware of the state/provincial and local laws pertaining to towing.

Your vehicle can be damaged if it is towed incorrectly. Although most operators know the correct procedure, it is possible to make a mistake. To avoid damage to your vehicle, make sure the following precautions are observed. If necessary, show this page to the tow truck driver.

TOWING PRECAUTIONS:

Use a safety chain system for all towing, and abide by the state/provincial and local laws. The wheels and axle on the ground must be in good condition. If they are damaged, use a towing dolly.

(a) Towing with wheel lift type truck

From front—Release the parking brake.

NOTICE

When lifting wheels, take care to ensure adequate ground clearance for towing at the opposite end of the raised vehicle. Otherwise, the bumper and/or underbody of the towed vehicle will be damaged during towing.

From rear—

- Manual transmission:

  We recommend using a towing dolly under the front wheels. If you do not use a towing dolly, place the ignition key in the “ACC” position and put the transmission in neutral.

NOTICE

Do not tow with the key removed or in the “LOCK” position when towing from the rear without a towing dolly. The steering lock mechanism is not strong enough to hold the front wheels straight.

- Automatic transmission:

  Use a towing dolly under the front wheels.

NOTICE

Never tow a vehicle with an automatic transmission from the rear with the front wheels on the ground, as this may cause serious damage to the transmission.

(b) Using flat bed truck

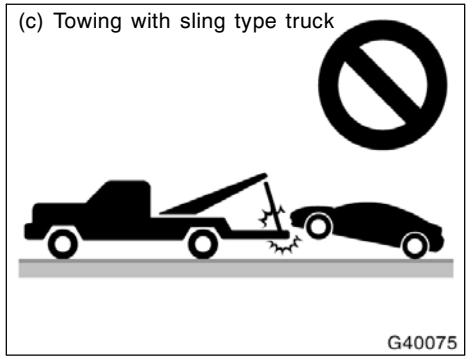

(c) Towing with sling type truck

NOTICE
Do not tow with sling type truck, either from the front or rear. This may cause body damage.

—Emergency towing

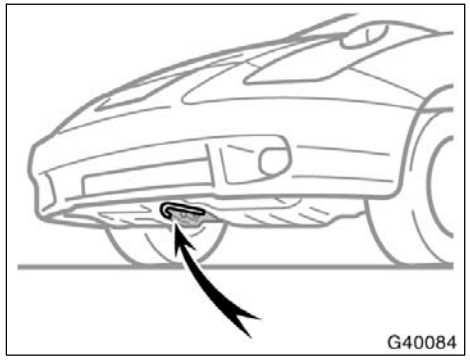

Front

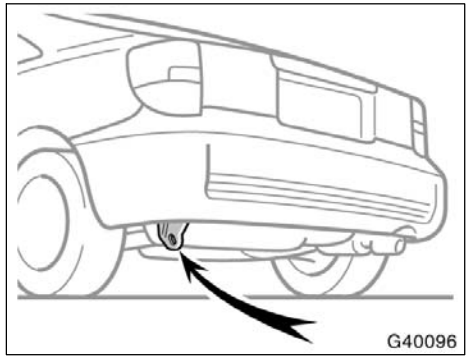

Rear

If towing is necessary, we recommend you to have it done by your Toyota dealer or a commercial tow truck service.

If towing service is not available in an emergency, your vehicle may be temporarily towed by a cable or chain secured to the emergency towing eyelet under the front of the vehicle or the left emergency towing eyelet under the rear of the vehicle. Use extreme caution when towing vehicles.

NOTICE
Only use specified towing eyelet; otherwise your vehicle may be damaged.

A driver must be in the vehicle to steer it and operate the brakes.

Towing in this manner may be done only on hard-surfaced roads for a short distance and at low speeds. Also, the wheels, axles, drive train, steering and brakes must all be in good condition.

⚠ CAUTION

Use extreme caution when towing vehicles. Avoid sudden starts or erratic driving maneuvers which would place excessive stress on the emergency towing eyelets and towing cable or chain. The eyelets and towing cable or chain may break and cause serious injury or damage.

NOTICE

Use only a cable or chain specifically intended for use in towing vehicles. Securely fasten the cable or chain to the towing eyelets provided.

Before towing, release the parking brake and put the transmission in neutral (manual) or “N” (automatic). The key must be in “ACC” (engine off) or “ON” (engine running).

⚠ CAUTION

If the engine is not running, the power assist for the brakes and steering will not work so steering and braking will be much harder than usual.

If you cannot shift automatic transmission selector lever

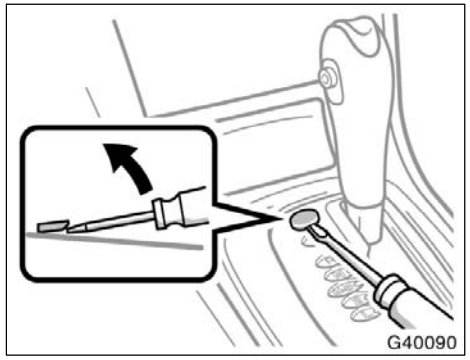

If you cannot shift the selector lever out of “P” position to other positions even though the brake pedal is depressed, use the shift lock override button as follows:

1. Turn the ignition key to “LOCK” position. Make sure the parking brake is on.
2. Pry up the cover with a flat-bladed screwdriver or equivalent.

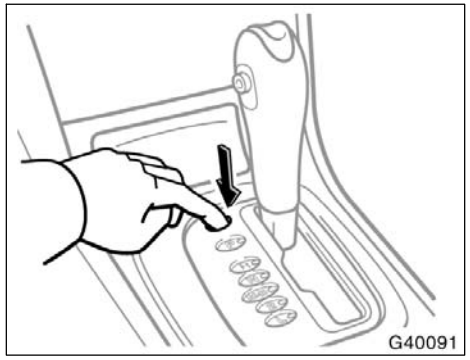

3. Insert your finger into the hole to push down the shift lock override button. You can shift out of “P” position only while pushing the button.
4. Shift into “N” position.
5. Insert the cover.
6. Start the engine. For your safety, keep the brake pedal depressed.

Be sure to have the system checked by your Toyota dealer as soon as possible.

If you lose your keys

You can purchase a new key at your Toyota dealer if you can give them the key number.

See the suggestion given in “Keys” in Section 1-2.

If your keys are locked in the vehicle and you cannot get a duplicate, many Toyota dealers can still open the door for you, using their special tools. If you must break a window to get in, we suggest breaking the smallest side window because it is the least expensive to replace. Be extremely cautious to avoid cuts from the glass.

If you lose your wireless remote control transmitter

You can purchase a new wireless remote control transmitter at your Toyota dealer.

Have the registered identification numbers of your transmitters deleted from your vehicle by your Toyota dealer as soon as possible to avoid the possibility of theft or an accident. Then, have the identification number of your new transmitter registered. At the same time, you must bring all of the remaining transmitters to have them registered again as well.

You can use the wireless remote control system with the new transmitter. Contact your Toyota dealer for detailed information.

SECTION 5

CORROSION PREVENTION AND APPEARANCE CARE

Protecting your Toyota from corrosion 174
Washing and waxing your Toyota 175
Cleaning the interior 177

Protecting your Toyota from corrosion

Toyota, through its diligent research, design and use of the most advanced technology available, has done its part to help prevent corrosion and has provided you with the finest quality vehicle construction. Now, it is up to you. Proper care of your Toyota can help ensure long-term corrosion prevention.

The most common causes of corrosion to your vehicle are:

- The accumulation of road salt, dirt and moisture in hard-to-reach areas under the vehicle.
- Chipping of paint, or undercoating caused by minor accidents or by stones and gravel.

Care is especially important if you live in particular areas or operate your vehicle under certain environmental conditions:

- Road salt or dust control chemicals will accelerate corrosion, as will the presence of salt in the air near the seacoast or in areas of industrial pollution.
- High humidity accelerates corrosion especially when temperatures range just above the freezing point.
- Wetness or dampness to certain parts of your vehicle for an extended period of time, may cause corrosion even though other parts of the vehicle may be dry.
- High ambient temperatures can cause corrosion to those components of the vehicle which are prevented from quick-drying due to lack of proper ventilation.

The above signifies the necessity to keep your vehicle, particularly the underside, as clean as possible and to repair any damage to paint or protective coatings as soon as possible.

To help prevent corrosion on your Toyota, follow these guidelines:

Wash your vehicle frequently. It is, of course, necessary to keep your vehicle clean by regular washing, but to prevent corrosion, the following points should be observed:

- If you drive on salted roads in the winter or if you live near the ocean, you should hose off the undercarriage at least once a month to minimize corrosion.
- High pressure water or steam is effective for cleaning the vehicle’s underside and wheel housings. Pay particular attention to these areas as it is difficult to see all the mud and dirt. It will do more harm than good to simply wet the mud and debris without removing them. The lower edge of doors, rocker panels and frame members have drain holes which should not be allowed to clog with dirt as trapped water in these areas can cause corrosion.
- Wash the underside of the vehicle thoroughly when winter is over.

See “Washing and waxing your Toyota” for more tips.

Check the condition of your vehicle’s paint and trim. If you find any chips or scratches in the paint, touch them up immediately to prevent corrosion from starting. If the chips or scratches have gone through the bare metal, have a qualified body shop make the repair.

Check the interior of your vehicle. Water and dirt can accumulate under the floor mats and could cause corrosion. Occasionally check under the mats to make sure the area is dry. Be particularly careful when transporting chemicals, cleansers, fertilizers, salt, etc.; these should be transported in proper containers. If a spill or leak should occur, immediately clean and dry the area.

Use mud shields on your wheels. If you drive on salted or gravel roads, mud shields help protect your vehicle. Full-size shields, which come as near to the ground as possible, are the best. We recommend that the fittings and the area where the shields are installed be treated to resist corrosion. Your Toyota dealer will be happy to assist in supplying and installing the shields if they are recommended for your area.

Keep your vehicle in a well ventilated garage or a roofed place. Do not park your vehicle in a damp, poorly ventilated garage. If you wash your vehicle in the garage, or if you drive it in covered with water or snow, your garage may be so damp it will cause corrosion. Even if your garage is heated, a wet vehicle can corrode if the ventilation is poor.

Washing and waxing your Toyota

Washing your Toyota

Keep your vehicle clean by regular washing.

The following cases may cause weakness to the paint or corrosion to the body and parts. Wash your vehicle as soon as possible.

- When driving in a coastal area
- When driving on a road sprinkled with antifreeze
- When having coal tar, tree sap, bird droppings and carcass of an insect
- When driving in the areas where there is a lot of smoke, soot, dust, iron dust and chemical substance
- When the vehicle becomes remarkably dirty with dust and mud

Hand-washing your Toyota

Work in the shade and wait until the vehicle body is not hot to the touch.

⚠ CAUTION

When cleaning under floor or chassis, be careful not to injure your hands.

1. Rinse off loose dirt with a hose. Remove any mud or road salt from the underside of the vehicle or in the wheel wells.
2. Wash with a mild car-wash soap, mixed according to the manufacturer’s instructions. Use a soft cotton mitt and keep it wet by dipping it frequently into the wash water. Do not rub hard—let the soap and water remove the dirt.

Plastic resin moon roof: Wash with a mild soap or neutral detergent. Use a soft cotton towel or sponge. Do not use window cleaner or abrasive cleaner. The plastic resin moon roof is easily damaged.

Plastic wheel ornaments: The plastic wheel ornaments are damaged easily by organic substances. If any organic substances splashes an ornament, be sure to wash it off with water and check if the ornament is damaged.

⚠ CAUTION

Do not attach the heavily damaged plastic wheel ornament. It may fly off the wheel and cause accidents while the vehicle is moving.

Aluminum wheels: Use only a mild soap or neutral detergent.

Plastic bumpers: Wash carefully. Do not scrub with abrasive cleaners. The bumper faces are soft.

Road tar: Remove with turpentine or cleaners that are marked safe for painted surfaces.

NOTICE

For plastic resin moon roof, plastic wheel ornaments, and plastic bumpers:

Do not use organic substances (gasoline, kerosene, benzine or strong solvents), which may be toxic or cause damage.

3. Rinse thoroughly—dried soap can cause streaking. In hot weather you may need to rinse each section right after you wash it.
4. To prevent water spots, dry the vehicle using a clean soft cotton towel. Do not rub or press hard—you might scratch the paint.

Automatic car wash

Your vehicle may be washed in an automatic car wash, but remember that the paint can be scratched by some type of brushes, unfiltered washing water, or the washing process itself. Scratching reduces paint durability and gloss, especially on darker colors. The manager of the car wash should be able to advise you whether the process is safe for the paint on your vehicle.

NOTICE

To prevent damage to the antenna, make sure it is removed before driving your Toyota through an automatic car wash.

Waxing your Toyota

Polishing and waxing is recommended to maintain the original beauty of your Toyota’s finish.

Once a month or if the vehicle surface does not repel water well, apply wax.

1. Always wash and dry the vehicle before you begin waxing, even if you are using a combined cleaner and wax.
2. Use a good quality polish and wax. If the finish has become extremely weathered, use a car-cleaning polish, followed by a separate wax. Carefully follow the manufacturer’s instructions and precautions. Be sure to polish and wax the chrome trim as well as the paint.
3. Wax the vehicle again when water does not bead but remains on the surface in large patches.

NOTICE

- Do not use wax on the plastic resin moon roof. The plastic resin moon roof is easily damaged.
- Always remove the plastic bumpers if your vehicle is re-painted and placed in a high heat paint waxing booth. High temperatures could damage the bumpers.

Cleaning the interior

CAUTION

- Vehicles with side airbags:

  Be careful not to splash water or spill liquid on the floor. This may prevent the side airbags from activating correctly, resulting in serious injury.
- Do not wash the vehicle floor with water, or allow water to get onto the floor when cleaning the vehicle interior or exterior. Water may get into audio components or other electrical components above or under the floor carpet (or mat) and cause a malfunction; and it may cause body corrosion.

Vinyl interior

The vinyl upholstery may be easily cleaned with a mild soap or detergent and water.

First vacuum over the upholstery to remove loose dirt. Then, using a sponge or soft cloth, apply the soap solution to the vinyl. After allowing it to soak in for a few minutes to loosen the dirt, remove the dirt and wipe off the soap with a clean damp cloth. If all the dirt do not come off, repeat the procedure. Commercial foaming-type vinyl cleaners are also available which work well. Follow the manufacturer’s instructions.

NOTICE

Do not use solvent, thinner, gasoline or window cleaner on the interior.

Carpets

Use a good foam-type shampoo to clean the carpets.

Begin by vacuuming thoroughly to remove as much dirt as possible. Several types of foam cleaners are available; some are in aerosol cans and others are powders or liquids which you mix with water to produce a foam. To shampoo the carpets, use a sponge or brush to apply the foam. Rub in overlapping circles.

Do not apply water—the best results are obtained by keeping the carpet as dry as possible. Read the shampoo instructions and follow them closely.

Seat belts

The seat belts may be cleaned with mild soap and water or with lukewarm water.

Use a cloth or sponge. As you are cleaning, check the belts for excessive wear, fraying, or cuts.

NOTICE

- Do not use dye or bleach on the belts—it may weaken them.
- Do not use the belts until they become dry.

Windows

The windows may be cleaned with any household window cleaner.

NOTICE

When cleaning the inside of the windows, be careful not to scratch or damage the heater wires on the rear window.

Air conditioning control panel, car audio, instrument panel, console panel, and switches

Use a soft damp cloth for cleaning.

Soak a clean soft cloth in water or lukewarm water then lightly wipe off dirt.

NOTICE

- Do not use organic substances (solvents, kerosene, alcohol, gasoline, etc.) or alkaline or acidic solutions. These chemicals can cause discoloring, staining or peeling of the surface.
- If you use cleaners or polishing agents, make sure their ingredients do not include the substances mentioned above.
- If you use a liquid car freshener, do not spill the liquid onto the vehicle’s interior surfaces. It may contain the ingredients mentioned above. Immediately clean any spill using the method mentioned above.

Leather Interior

The leather upholstery may be cleaned with neutral detergent for wool.

Remove dirt using a soft cloth dampened with 5% solution of neutral detergent for wool. Then thoroughly wipe off all traces of detergent with a clean damp cloth.

After cleaning or whenever any part of the leather gets wet, dry with a soft clean cloth. Allow the leather to dry in a ventilated shaded area.

NOTICE

- If a stain should fail to come out with a neutral detergent, apply a cleaner that does not contain an organic solvent.
- Never use organic substances such as benzine, alcohol or gasoline or alkaline or acid solutions for cleaning the leather as these could cause discoloring.
- Use of a nylon brush or synthetic fiber cloth, etc. may scratch the fine grained surface of the leather.
- Mildew may develop on soiled leather upholstery. Be especially careful to avoid oil spots. Try to keep your upholstery always clean.
- Long exposure to direct sunlight may cause the leather surface to harden and shrink. Keep your vehicle in a shaded area, especially in the summer.
- The interior of your vehicle is apt to heat up on hot summer days, so avoid placing on the upholstery items made of vinyl or plastic or containing wax as these tend to stick to leather when warm.
- Improper cleaning of the leather upholstery could result in discoloration or staining.

If you have any questions about the cleaning of your Toyota, your local Toyota dealer will be pleased to answer them.

SECTION 6

VEHICLE MAINTENANCE AND CARE

Maintenance requirements 180
General maintenance 181
Does your vehicle need repairing? 183

For scheduled maintenance information, please refer to the separate “Scheduled Maintenance Guide” or “Owner’s Manual Supplement”.

Maintenance requirements

Your Toyota vehicle has been designed for fewer maintenance requirements with longer service intervals to save both your time and money. However, each regular maintenance, as well as day-to-day care, is more important than ever before to ensure smooth, and trouble-free, safe, and economical driving.

It is the owner's responsibility to make sure the specified maintenance, including general maintenance service, is performed. Note that both the new vehicle and emission control system warranties specify that proper maintenance and care must be performed. See "Owner's Warranty Information Booklet" or "Owner's Manual Supplement" for complete warranty information.

General maintenance

General maintenance items are those day-to-day care practices that are important to your vehicle for proper operation. It is the owner's responsibility to insure that the general maintenance items are performed regularly.

These checks or inspections can be done either by yourself or a qualified technician, or if you prefer, your Toyota dealer will be pleased to do them at a nominal cost.

Scheduled maintenance

The scheduled maintenance items listed in the "Scheduled Maintenance Guide" or "Owner's Manual Supplement" are those required to be serviced at regular intervals.

For details of your maintenance schedule, read the separate "Scheduled Maintenance Guide" or "Owner's Manual Supplement".

It is recommended that any replacement parts used for maintenance or for the repair of the emission control system be Toyota supplied.

The owner may elect to use non-Toyota supplied parts for replacement purposes without invalidating the emission control system warranty. However, use of replacement parts which are not of equivalent quality may impair the effectiveness of the emission control systems.

You may also elect to have maintenance, replacement, or repair of the emission control devices and system performed by any automotive repair establishment or individual without invalidating this warranty. See "Owner's Warranty Information Booklet" or "Owner's Manual Supplement" for complete warranty information.

Where to go for service?

Toyota technicians are well-trained specialists and are kept up to date with the latest service information through technical bulletins, service tips, and in-dealership training programs. They learn to work on Toyotas before they work on your vehicle, rather than while they are working on it.

You can be confident that your Toyota dealer's service department performs the best job to meet the maintenance requirements on your vehicle—reliably and economically.

Your copy of the repair order is proof that all required maintenance has been performed for warranty coverage. And if any problems should arise with your vehicle while under warranty, your Toyota dealer will promptly take care of it. Again, be sure to keep a copy of the repair order for any service performed on your Toyota.

What about do-it-yourself maintenance?

Many of the maintenance items are easy to do yourself if you have a little mechanical ability and a few basic automotive tools. Simple instructions for how to perform them are presented in Section 7.

If you are a skilled do-it-yourself mechanic, the Toyota service manuals are recommended. Please be aware that do-it-yourself maintenance can affect your warranty coverage. See “Owner’s Warranty Information Booklet” or “Owner’s Manual Supplement” for the details.

General maintenance

Listed below are the general maintenance items that should be performed as frequently as specified. In addition to checking the items listed, if you notice any unusual noise, smell or vibration, you should investigate the cause or take your vehicle to your Toyota dealer or a qualified service shop immediately. It is recommended that any problem you notice be brought to the attention of your dealer or the qualified service shop for their advice.

⚠ CAUTION

Make these checks only where adequate ventilation can be obtained if you run the engine.

OUTSIDE THE VEHICLE

Items listed below should be performed from time to time, unless otherwise specified.

Tire pressure

Check the pressure with a gauge every two weeks, or at least once a month. See Section 7-2 for additional information.

Tire surface and wheel nuts

Check the tires carefully for cuts, damage or excessive wear. See Section 7-2 for additional information. When checking the tires, make sure no nuts are missing, and check the nuts for looseness. Tighten them if necessary.

Tire rotation

Rotate the tires according to the maintenance schedule. (For scheduled maintenance information, please refer to the “Scheduled Maintenance Guide” or “Owner’s Manual Supplement”.) See Section 7-2 for additional information.

Fluid leaks

Check underneath for leaking fuel, oil, water or other fluid after the vehicle has been parked for a while. If you smell fuel fumes or notice any leak, have the cause found and corrected immediately.

Doors and engine hood

Check that all doors including back door operate smoothly and all latches lock securely. Make sure the engine hood secondary latch secures the hood from opening when the primary latch is released.

INSIDE THE VEHICLE

Items listed below should be checked regularly, e.g. while performing periodic services, cleaning the vehicle, etc.

Lights
Make sure the headlights, stop lights, tail lights, turn signal lights, and other lights are all working.

Service reminder indicators and warning buzzers
Check that all service reminder indicators and warning buzzers function properly.

Steering wheel
Be alert for changes in steering condition, such as hard steering or strange noise.

Seats
Check that all front seat controls such as seat adjusters, seatback recliner, etc. operate smoothly and that all latches lock securely in any position. For folding-down rear seatbacks, check that the latches lock securely.

Seat belts
Check that the seat belt system such as buckles, retractors and anchors operate properly and smoothly. Make sure the belt webbing is not cut, frayed, worn or damaged.

Accelerator pedal
Check the pedal for smooth operation and uneven pedal effort or catching.

Clutch pedal
Check the pedal for smooth operation.

Brake pedal
Check the pedal for smooth operation and that the pedal has the proper clearance. Check the brake booster function.

Brakes
At a safe place, check that the brakes do not pull to one side when applied.

Parking brake
Check that the lever has the proper travel and that, on a safe incline, your vehicle is held securely with only the parking brake applied.

Automatic transmission "Park" mechanism
Check the lock release button of the selector lever for proper and smooth operation. On a safe incline, check that your vehicle is held securely with the selector lever in "P" position and all brakes released.

IN THE ENGINE COMPARTMENT

Items listed below should be checked from time to time, e.g. each time when refueling.

Washer fluid
Make sure there is sufficient fluid in the tank. See Section 7-3 for additional information.

Engine coolant level
Make sure the coolant level is between the "FULL" and "LOW" lines on the see-through reservoir when the engine is cold. See Section 7-2 for additional information.

Battery electrolyte level
Your Toyota has a maintenance free battery. You do not have to add distilled water. For longer life of the battery, however, see Section 7-3 for additional information.

Brake fluid level
Make sure the brake fluid level is correct. See Section 7-2 for additional information.

Engine oil level
Check the level on the dipstick with the engine turned off and the vehicle parked on a level spot. See Section 7-2 for additional information.

Power steering fluid level

Check the level through the reservoir. The level should be in the “HOT” or “COLD” range depending on the fluid temperature. See Section 7-2 for additional information.

Exhaust system

If you notice any change in the sound of the exhaust or smell exhaust fumes, have the cause located and corrected immediately. (See “Engine exhaust cautions” in Section 2.)

Does your vehicle need repairing?

Be on the alert for changes in performance, sounds, and visual tip-offs that indicate service is needed. Some important clues are as follows:

- Engine missing, stumbling, or pinging
- Appreciable loss of power
- Strange engine noises
- A leak under the vehicle (however, water dripping from the air conditioning after use is normal.)
- Change in exhaust sound (This may indicate a dangerous carbon monoxide leak. Drive with the windows open and have the exhaust system checked immediately.)
- Flat-looking tire; excessive tire squeal when cornering; uneven tire wear
- Vehicle pulls to one side when driving straight on a level road
- Strange noises related to suspension movement
- Loss of brake effectiveness; spongy feeling brake or clutch pedal; pedal almost touches floor; vehicle pulls to one side when braking
- Engine coolant temperature continually higher than normal

If you notice any of these clues, take your vehicle to your Toyota dealer as soon as possible. It probably needs adjustment or repair.

⚠ CAUTION

Do not continue driving with the vehicle unchecked. It could result in serious vehicle damage and possibly personal injury.

SECTION 7 - 1

DO-IT-YOURSELF MAINTENANCE

Introduction

Engine compartment overview 186
Fuse locations 188
Do-it-yourself service precautions 189
Positioning the jack 190
Parts and tools 191

Engine compartment overview

▶1ZZ-FE engine

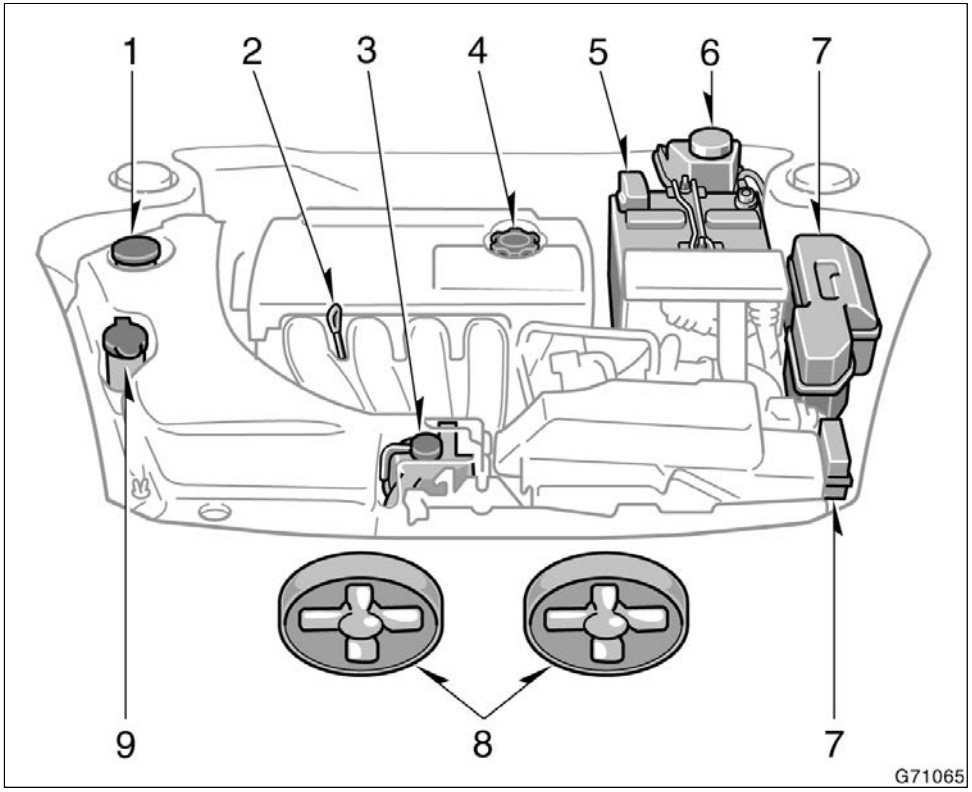

1. Power steering fluid reservoir
2. Engine oil level dipstick
3. Engine coolant reservoir
4. Engine oil filler cap
5. Battery
6. Brake fluid reservoir
7. Fuse blocks
8. Electric cooling fans
9. Windshield and rear window washer fluid tank

▶2ZZ-GE engine

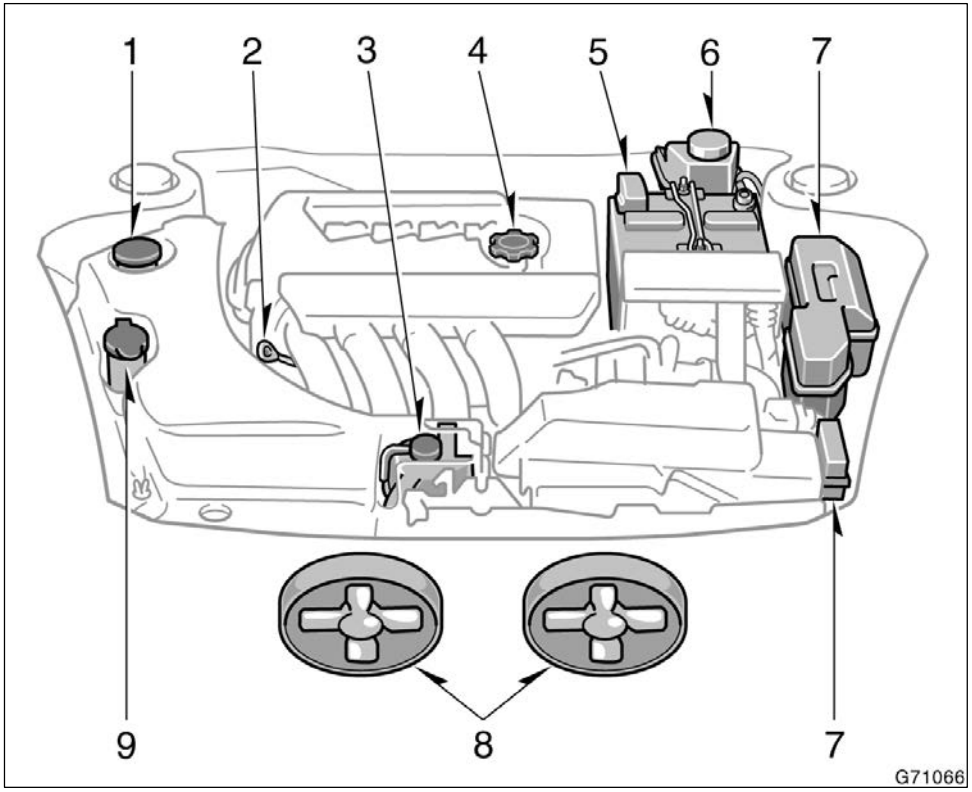

1. Power steering fluid reservoir
2. Engine oil level dipstick
3. Engine coolant reservoir
4. Engine oil filler cap
5. Battery
6. Brake fluid reservoir
7. Fuse blocks
8. Electric cooling fans
9. Windshield and rear window washer fluid tank

Fuse locations

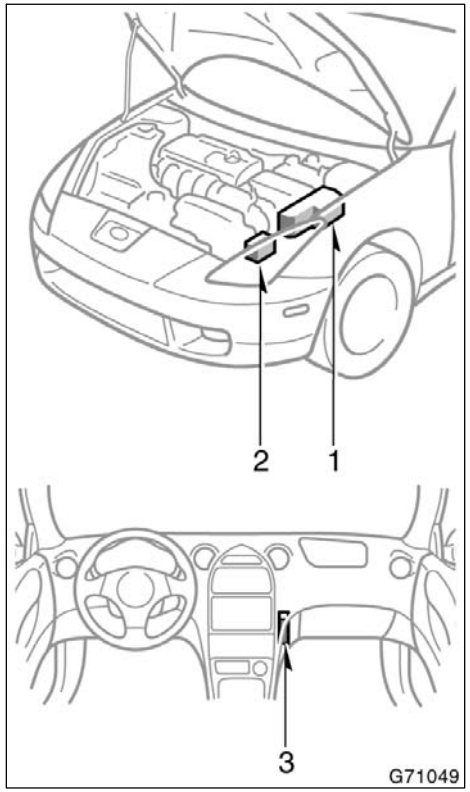

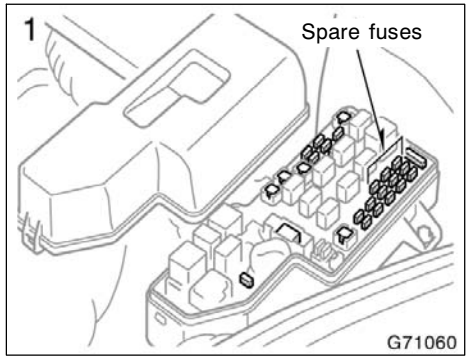

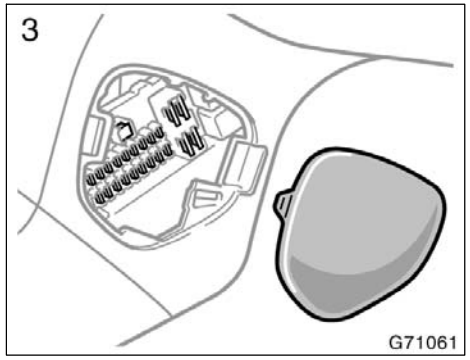

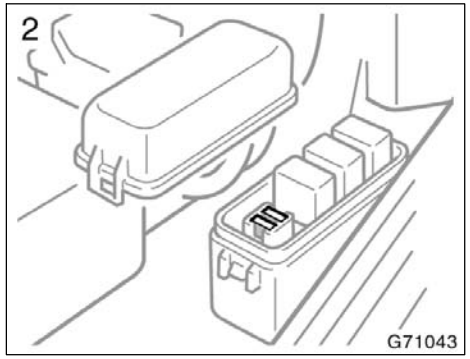

Do-it-yourself service precautions

If you perform maintenance by yourself, be sure to follow the correct procedure given in this section.

You should be aware that improper or incomplete servicing may result in operating problems.

Performing do-it-yourself maintenance during the warranty period may affect your warranty coverage. Read the separate Toyota Warranty statement for details and suggestions.

This section gives instructions only for those items that are relatively easy for an owner to perform. As explained in Section 6, there are still a number of items that must be done by a qualified technician with special tools.

For information on tools and parts for do-it-yourself maintenance, see “Parts and tools”.

Utmost care should be taken when working on your vehicle to prevent accidental injury. Here are a few precautions that you should be especially careful to observe:

CAUTION

- When the engine is running, keep hands, clothing, and tools away from the moving fan and engine drive belts. (Removing rings, watches, and ties is advisable.)
- Right after driving, the engine compartment—the engine, radiator, exhaust manifold, power steering fluid reservoir and spark plug boots, etc.—will be hot. So be careful not to touch them. Oil, fluids and spark plugs may also be hot.
- If the engine is hot, do not remove the coolant reservoir cap or air release valve or loosen the drain plugs to prevent burning yourself.
- Do not smoke, cause sparks or allow open flames around fuel or the battery. Their fumes are flammable.
- Be extremely cautious when working on the battery. It contains poisonous and corrosive sulfuric acid.
- Do not get under your vehicle with just the body jack supporting it. Always use automotive jack stands or other solid supports.
- Be sure that the ignition is off if you work near the electric cooling fans or radiator grille. With the ignition on, the electric cooling fans will automatically start to run if the engine coolant temperature is high and/or the air conditioning is on.
- Use eye protection whenever you work on or under your vehicle where you may be exposed to flying or falling material, fluid spray, etc.
- Used engine oil contains potentially harmful contaminants which may cause skin disorders such as inflammation or skin cancer, so care should be taken to avoid prolonged and repeated contact with it. To remove used engine oil from your skin, wash thoroughly with soap and water.
- Do not leave used oil within the reach of children.
- Dispose of used oil and filter only in a safe and acceptable manner. Do not dispose of used oil and filter in household trash, in sewers or onto the ground. Call your dealer or a service station for information concerning recycling or disposal.

NOTICE

- Remember that battery and ignition cables carry high currents or voltages. Be careful of accidentally causing a short circuit.
- Add only demineralized or distilled water to fill the radiator. And if you spill some of the coolant, be sure to wash it off with water to prevent it from damaging the parts or paint.
- Do not allow dirt or anything else to fall through the spark plug holes.
- Do not pry the outer electrode of a spark plug against the center electrode.
- Use only spark plugs of the specified type. Using other types will cause engine damage, loss of performance or radio noise.
- Do not reuse iridium-tipped spark plugs by cleaning or regapping.
- Do not overfill automatic transmission fluid, or the transmission could be damaged.

- Do not drive with the air cleaner filter removed, or excessive engine wear could result. Also backfiring could cause a fire in the engine compartment.
- Be careful not to scratch the glass surface with the wiper frame.
- When closing the engine hood, check to see that you have not forgotten any tools, rags, etc.

Positioning the jack

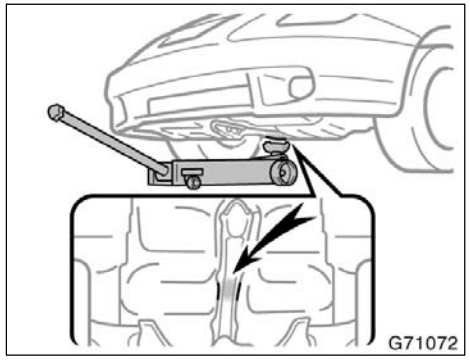

Front

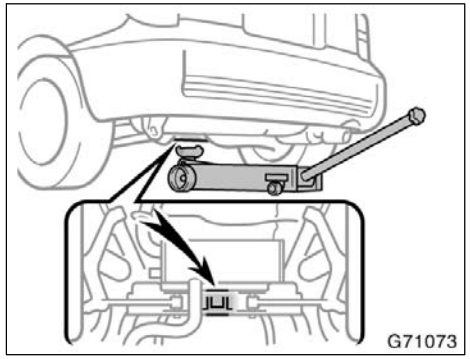

Rear

When jacking up your vehicle with the jack, position the jack correctly as shown in the illustrations.

CAUTION

When jacking, be sure to observe the following to reduce the possibility of personal injury:

- Follow jacking instructions.
- Do not put any part of your body under the vehicle supported by the jack. Personal injury may occur.
- Do not start or run the engine while your vehicle is supported by the jack.
- Stop the vehicle on a level firm ground, firmly set the parking brake and put the transmission in “P” (automatic) or reverse (manual). Block the wheels on the opposite side of the jack up point if necessary.
- Make sure to set the jack properly in the jack point. Raising the vehicle with jack improperly positioned will damage the vehicle or may allow the vehicle to fall off the jack and cause personal injury.
- Never get under the vehicle when the vehicle is supported by the jack alone.
- Do not raise the vehicle with someone in the vehicle.
- When raising the vehicle, do not put an object on or under the jack.

NOTICE

Make sure to place the jack correctly, or your vehicle may be damaged.

Parts and tools

Here is a list of parts and tools you will need on performing do-it-yourself maintenance. Remember all Toyota parts are designed in metric sizes, so your tools must be metric.

Checking the engine oil level

Parts (if level is low):

- Engine oil API grade SJ, “Energy-Conserving” or ILSAC multigrade having viscosity proper for your climate

Tools:

- Rag or paper towel
- Funnel (only for adding oil)

Checking the engine coolant level

Parts (if level is low):

- “TOYOTA Long Life Coolant” or equivalent
  See Section 7-2 for details about coolant type selection.
- Demineralized or distilled water

Tools:

- Funnel (only for adding coolant)

Checking brake fluid

Parts (if level is low):

- SAE J1703 or FMVSS No.116 DOT 3 brake fluid

Tools:

- Rag or paper towel
- Funnel (only for adding fluid)

Checking power steering fluid

Parts (if level is low):

- Automatic transmission fluid DEXRON®II or III

Tools:

- Rag or paper towel
- Funnel (only for adding fluid)

Checking battery condition

Tools:

- Warm water
- Baking soda
- Grease
- Conventional wrench (for terminal clamp bolts)

Checking and replacing fuses

Parts (if replacement is necessary):

- Fuse with same amperage rating as original

Adding washer fluid

Parts:

- Water
- Washer fluid containing antifreeze (for winter use)

Tools:

- Funnel

Replacing light bulbs

Parts:

- Bulb with same number and wattage rating as original (See charts in “Replacing light bulbs—” in Section 7-3.)

Tools:

- Screwdriver

SECTION 7 - 2

DO-IT-YOURSELF MAINTENANCE

Engine and Chassis

Checking the engine oil level 194
Checking the engine coolant levelel 195
Checking brake fluid 196
Checking power steering fluid 197
Checking tire pressure 198
Checking and replacing tires 199
Rotating tires 200
Installing snow tires and chains 201
Replacing wheels 202
Aluminum wheel precautions 203

Checking the engine oil level

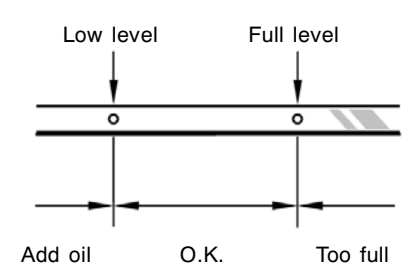

With the engine at operating temperature and turned off, check the oil level on the dipstick.

1. To get a true reading, the vehicle should be on a level spot. After turning off the engine, wait a few minutes for the oil to drain back into the bottom of the engine.
2. Pull out the dipstick, and wipe it clean with a rag.
3. Reinsert the dipstick—push it in as far as it will go, or the reading will not be correct.
4. Pull the dipstick out and look at the oil level on the end.

⚠ CAUTION

Be careful not to touch the hot exhaust manifold.

If the oil level is below or only slightly above the low level, add engine oil of the same type as already in the engine.

Remove the oil filler cap and add engine oil in small quantities at a time, checking the dipstick.

The approximate quantity of oil needed to fill between the low level and the full level on the dipstick is indicated below for reference.

When the level reaches within the correct range, install the filler cap hand-tight.

Oil quantity, L (qt., Imp. qt.):

1ZZ-FE engine	1.3 (1.4, 1.1)
2ZZ-GE engine	1.5 (1.6, 1.3)

NOTICE

- Avoid overfilling, or the engine could be damaged.
- Check the oil level on the dipstick once again after adding the oil.

ENGINE OIL SELECTION

Use API grade SJ, "Energy-Conserving" or ILSAC multigrade engine oil.

Recommended viscosity (SAE):

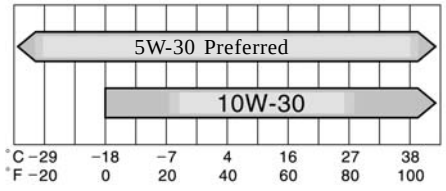

Temperature range anticipated before next oil change

OIL005

SAE 5W-30 is the best choice for your vehicle, for good fuel economy, and good starting in cold weather.

If you use SAE 10W-30 engine oil in extremely low temperatures, the engine may become difficult to start, so SAE 5W-30 engine oil is recommended.

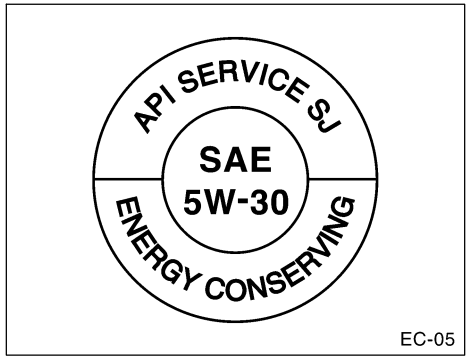

API service symbol

ILSAC certification mark

Oil identification marks

Either or both API registered marks are added to some oil containers to help you select the oil you should use.

The API Service Symbol is located anywhere on the outside of the container.

The top portion of the label shows the oil quality by API (American Petroleum Institute) designations such as SJ. The center portion of the label shows the SAE viscosity grade such as SAE 5W-30. “Energy-Conserving” shown in the lower portion, indicates that the oil has fuel-saving capabilities.

The ILSAC (International Lubricant Standardization and Approval Committee) Certification Mark is displayed on the front of the container.

Checking the engine coolant level

Look at the see-through coolant reservoir when the engine is cold. The coolant level is satisfactory if it is between the “FULL” and “LOW” lines on the reservoir. If the level is low, have your Toyota dealer add ethylene-glycol type coolant for proper corrosion protection of aluminum components.

The coolant level in the reservoir will vary with engine temperature. However, if the level is on or below the “LOW” line, you should have your Toyota dealer add coolant.

Always use ethylene-glycol type coolant for a proper corrosion protection of aluminum components. See information in the next column.

If the coolant level drops within a short time after replenishing, there may be a leak in the system. Visually check the radiator, hoses, drain cock and water pump.

If you can find no leak, have your Toyota dealer test the cap pressure and check for leaks in the cooling system.

⚠ CAUTION

To prevent burning yourself, do not remove the coolant reservoir cap or air release valve when the engine is hot.

Coolant type selection

Use of improper coolants may damage your engine cooling system. Your coolant must contain ethylene-glycol type coolant for a proper corrosion protection of your engine that contains aluminum components. Use “TOYOTA Long Life Coolant” or equivalent.

In addition to preventing freezing and subsequent damage to the engine, this type of coolant will also prevent corrosion. Further supplemental inhibitors or additives are neither needed nor recommended.

Read the coolant container for information on freeze protection. Follow the manufacturer’s directions for how much to mix with plain water (preferably demineralized water or distilled water). The total capacity of the cooling system is given in Section 8.

We recommend to use 50% solution for your Toyota, to provide protection down to about -35°C (-31°F). When it is extremely cold, to provide protection down to about -50°C (-58°F), 60% solution is recommended. Do not use more than 70% solution for better coolant performance.

NOTICE

Do not use alcohol type antifreeze or plain water alone.

Checking brake fluid

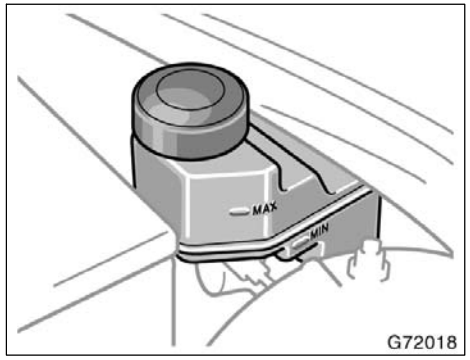

To check the fluid level, simply look at the see-through reservoir. The level should be between the “MAX” and “MIN” lines on the reservoir.

It is normal for the brake fluid level to go down slightly as the brake pads wear. So be sure to keep the reservoir filled.

If the reservoir needs frequent refilling, it may indicate a serious mechanical problem.

If the level is low, add SAE J1703 or FMVSS No.116 DOT 3 brake fluid to the brake reservoir.

Remove and replace the reservoir cap by hand. Fill the brake fluid to the dotted line. This brings the fluid to the correct level when you put the cap back on.

Use only newly opened brake fluid. Once opened, brake fluid absorbs moisture from the air, and excess moisture can cause a dangerous loss of braking.

CAUTION

Take care when filling the reservoir because brake fluid can harm your eyes and damage painted surfaces. If fluid gets in your eyes, flush your eyes with clean water immediately. If you still feel uncomfortable with your eyes, go to the doctor.

NOTICE

If you spill the fluid, be sure to wash it off with water to prevent it from damaging the parts or paint.

Checking power steering fluid

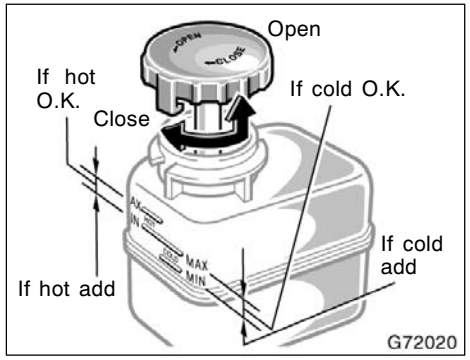

Check the fluid level through the reservoir. If necessary, add automatic transmission fluid DEXRON®II or III.

If the vehicle has been driven around 80 km/h (50 mph) for 20 minutes (a little more in frigid temperatures), the fluid is hot (60°C—80°C or 140°F—175°F). You may also check the level when the fluid is cold (about room temperature, 10°C—30°C or 50°F—85°F) if the engine has not been run for about five hours.

Clean all dirt from outside of the reservoir tank and look at the fluid level. If the fluid is cold, the level should be in the "COLD" range. Similarly, if it is hot, the fluid level should be in the "HOT" range. If the level is at the low side of either range, add automatic transmission fluid DEXRON®II or III to bring the level within the range.

To remove the reservoir cap, turn it counterclockwise and lift up. To reinstall it, turn it clockwise. After replacing the reservoir cap, visually check the steering box case, vane pump and hose connections for leaks or damage.

CAUTION

The reservoir tank may be hot so be careful not to burn yourself.

NOTICE

Avoid overfilling, or the power steering could be damaged.

Checking tire pressure

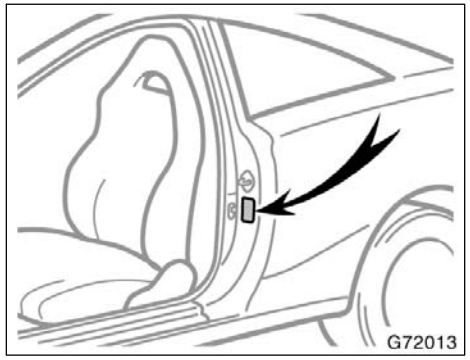

Keep your tire pressures at the proper level.

The recommended cold tire pressures, tire size and the vehicle capacity weight are given in Section 8. They are also on the tire pressure label as shown.

You should check the tire pressures every two weeks, or at least once a month. And do not forget the spare!

Incorrect tire pressure can reduce tire life and make your vehicle less safe to drive.

Low tire pressure results in excessive wear, poor handling, reduced fuel economy, and the possibility of blowouts from overheated tires. Also, low tire pressure can cause poor sealing of the tire bead. If the tire pressure is excessively low, there is the possibility of wheel deformation and/or tire separation.

High tire pressure produces a harsh ride, handling problems, excessive wear at the center of the tire tread, and a greater possibility of tire damage from road hazards.

If a tire frequently needs refilling, have it checked by your Toyota dealer.

The following instructions for checking tire pressure should be observed:

- The pressure should be checked only when the tires are cold. If your vehicle has been packed for at least 3 hours and has not been driven for more than 1.5 km or 1 mile since, you will get an accurate cold tire pressure reading.
- Always use a tire pressure gauge. The appearance of a tire can be misleading. Besides, tire pressures that are even just a few pounds off can degrade ride and handling.
- Take special care when adding air to the compact spare tire. The smaller tire size can gain pressure very quickly. Add compressed air in small quantities and check the pressure often until it reaches the specified pressure.
- Do not bleed or reduce tire pressure after driving. It is normal for the tire pressure to be higher after driving.
- Never exceed the vehicle capacity weight. The passenger and luggage weight should be located so that the vehicle is balanced.
- Be sure to reinstall the tire inflation valve caps. Without the valve caps, dirt or moisture could get into the valve core and cause air leakage. If the caps have been lost, have new ones put on as soon as possible.

Checking and replacing tires

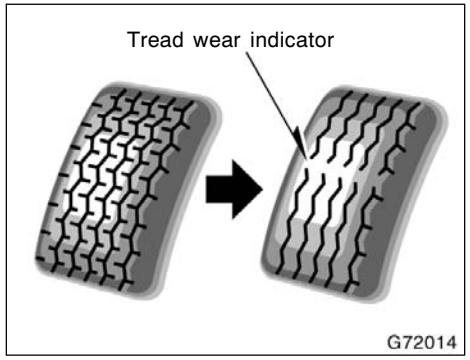

CHECKING YOUR TIRES

Check the tire tread for the tread wear indicators. If the indicators show, replace the tires.

The tires on your Toyota have built-in tread wear indicators to help you know when the tires need replacement. When the tread depth wears to 1.6 mm (0.06 in.) or less, the indicators will appear. If you can see the indicators in two or more adjacent grooves, the tire should be replaced. The lower the tread, the higher the risk of skidding.

The effectiveness of snow tires is lost if the tread wears down below 4 mm (0.16 in.).

Check the tires regularly for damage such as cuts, splits and cracks. If any damage is found, consult with a technician and have the tire repaired or replaced.

Even if the damage does not appear serious, a qualified technician should examine the damage. Objects which have penetrated the tire may have caused internal damage.

Any tires which are over 6 years old must be checked by a qualified technician even if damage is not obvious.

Tires deteriorate with age even if they have never or seldom been used.

This also applies to the spare tire and tires stored for future use.

REPLACING YOUR TIRES

When replacing a tire, use only the same size and construction as originally installed and with the same or greater load capacity.

Using any other size or type of tire may seriously affect handling, ride, speedometer/odometer calibration, ground clearance, and clearance between the body and tires or snow chains.

⚠ CAUTION

- Do not mix radial, bias belted, or bias-ply tires on your vehicle. It can cause dangerous handling characteristics, resulting in loss of control.
- Do not use tires or wheels other than the manufacturer's recommended size.

Toyota recommends all four tires, or at least both front or rear tires be replaced as a set.

See "If you have a flat tire" in Section 4 for tire change procedure.

When a tire is replaced, the wheel should always be balanced.

An unbalanced wheel may affect vehicle handling and tire life. Wheels can get out of balance with regular use and should therefore be balanced occasionally.

When replacing a tubeless tire, the air valve should also be replaced with a new one.

Rotating tires

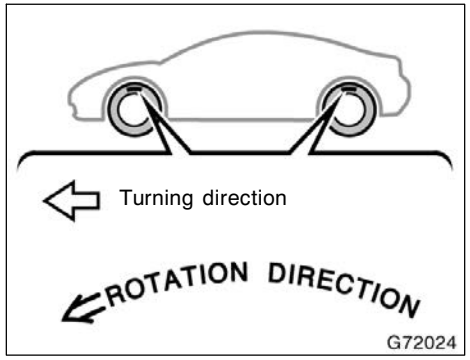

Turning direction indicator (type A)

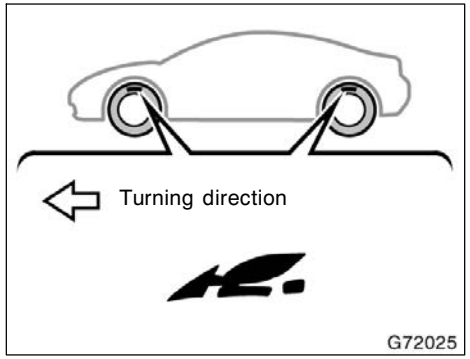

Turning direction indicator (type B)

If a turning indicator is marked on your tires, you have uni-directional tires. Before rotating, check whether your tires are uni-directional before rotating them. Using tires on the wrong side of the vehicle will impair tire performance.

See the following instructions for how to rotate your tires correctly.

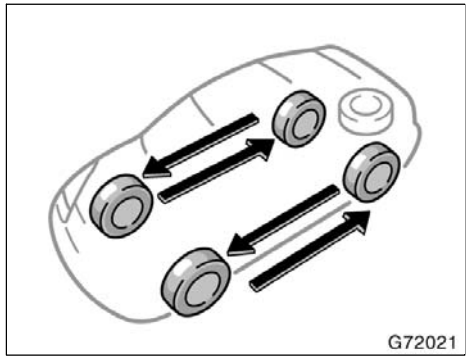

With uni-directional tires

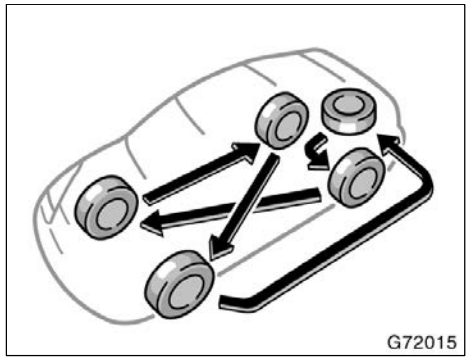

Without uni-directional tires
(with a spare tire of the same wheel type as the installed tires)

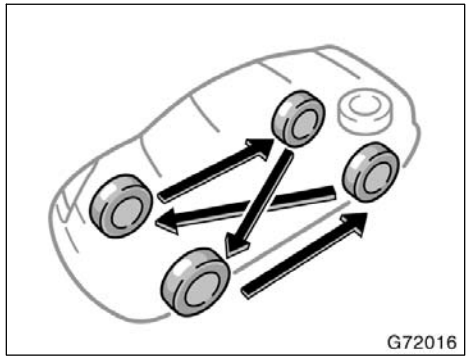

Without uni-directional tires
(with a spare tire of different wheel type from the installed tires)

To equalize the wear and help extend tire life, Toyota recommends that you rotate your tires according to the maintenance schedule. (For scheduled maintenance information, please refer to the “Scheduled Maintenance Guide” or “Owner’s Manual Supplement”.) However, the most appropriate timing for tire rotation may vary according to your driving habits and road surface conditions.

See “If you have a flat tire” in Section 4 for tire change procedure.

When rotating tires, check for uneven wear and damage. Abnormal wear is usually caused by incorrect tire pressure, improper wheel alignment, out-of-balance wheels, or severe braking.

⚠ CAUTION

Do not include a compact spare tire when rotating the tires. It is designed for temporary use only.

Installing snow tires and chains

WHEN TO USE SNOW TIRES OR CHAINS

Snow tires or chains are recommended when driving on snow or ice.

On wet or dry roads, conventional tires provide better traction than snow tires.

SNOW TIRE SELECTION

If you need snow tires, select the same size, construction and load capacity as the original tires on your Toyota.

Do not use tires other than those mentioned above. Do not install studded tires without first checking local regulations for possible restrictions.

SNOW TIRE INSTALLATION

Snow tires should be installed on all wheels.

Installing snow tires on the front wheels only can lead to an excessive difference in road grip capability between the front and rear tires which could cause loss of vehicle control.

When storing removed tires, you should store them in a cool dry place.

Mark the direction of rotation and be sure to install them in the same direction when replacing.

CAUTION

- Do not drive with the snow tires incorrectly inflated.
- Never drive over 120 km/h (75 mph) with any type of snow tires.

TIRE CHAIN SELECTION

Use the tire chains of correct size and type.

Use SAE Class “S” type radial tire chains except radial cable chains or V-bar type chains.

Regulations regarding the use of tire chains vary according to location or type of road, so always check them before installing chains.

CHAIN INSTALLATION

Install the chains on the front tires as tightly as possible. Do not use tire chains on the rear tires. Retighten chains after driving 0.5—1.0 km (1/4—1/2 mile).

When installing chains on your tires, carefully follow the instructions of the chain manufacturer.

If wheel covers are used, they will be scratched by the chain band, so remove the covers before putting on the chains.

CAUTION

- Do not exceed 50 km/h (30 mph) or the chain manufacturer’s recommended speed limit, whichever is lower.
- Drive carefully avoiding bumps, holes, and sharp turns, which may cause the vehicle to bounce.
- Avoid sharp turns or locked-wheel braking, as use of chains may adversely affect vehicle handling.
- When driving with chains installed, be sure to drive carefully. Slow down before entering the curves to avoid losing control of the vehicle. Otherwise an accident may occur.

NOTICE

Do not attempt to use a tire chain on the compact spare tire, as it may result in damage to the vehicle as well as the tire.

Replacing wheels

WHEN TO REPLACE YOUR WHEELS

If you have wheel damage such as bending, cracks or heavy corrosion, the wheel should be replaced.

If you fail to replace damaged wheels, the tire may slip off the wheel or cause loss of handling control.

WHEEL SELECTION

When replacing wheels, care should be taken to ensure that the wheels are replaced by ones with the same load capacity, diameter, rim width, and offset.

This must be observed on compact spare tires, too.

Correct replacement wheels are available at your Toyota dealer.

A wheel of a different size or type may adversely affect handling, wheel and bearing life, brake cooling, speedometer/odometer calibration, stopping ability, headlight aim, bumper height, vehicle ground clearance, and tire or snow chain clearance to the body and chassis.

Replacement with used wheels is not recommended as they may have been subjected to rough treatment or high mileage and could fail without warning. Also, bent wheels which have been straightened may have structural damage and therefore should not be used. Never use an inner tube in a leaking wheel which is designed for a tubeless tire.

Aluminum wheel precautions

- When installing aluminum wheels, check that the wheel nuts are tight after driving your vehicle the first 1600 km (1000 miles).
- If you have rotated, repaired, or changed your tires, check that the wheel nuts are still tight after driving 1600 km (1000 miles).
- When using tire chains, be careful not to damage the aluminum wheels.
- Use only the Toyota wheel nuts and wrench designed for your aluminum wheels.
- When balancing your wheels, use only Toyota balance weights or equivalent and a plastic or rubber hammer.
- As with any wheel, periodically check your aluminum wheels for damage. If damaged, replace immediately.

SECTION 7-3

DO-IT-YOURSELF MAINTENANCE

Electrical components

Checking battery condition 206
Battery recharging precautions 207
Checking and replacing fuses 208
Adding washer fluid 209
Replacing light bulbs 210

Checking battery condition——Precautions

⚠ CAUTION

BATTERY PRECAUTIONS

The battery produces flammable and explosive hydrogen gas.

- Do not cause a spark from the battery with tools.
- Do not smoke or light a match near the battery.

The electrolyte contains poisonous and corrosive sulfuric acid.

- Avoid contact with eyes, skin or clothes.
- Never ingest electrolyte.
- Wear protective safety glasses when working near the battery.
- Keep children away from the battery.

EMERGENCY MEASURES

- If electrolyte gets in your eyes, flush your eyes with clean water immediately and get immediate medical attention. If possible, continue to apply water with a sponge or cloth while en route to the medical office.
- If electrolyte gets on your skin, thoroughly wash the contact area. If you feel pain or burning, get medical attention immediately.
- If electrolyte gets on your clothes, there is a possibility of its soaking through to your skin, so immediately take off the exposed clothing and follow the procedure above, if necessary.
- If you accidentally swallow electrolyte, drink a large quantity of water or milk. Follow with milk of magnesia, beaten raw egg or vegetable oil. Then go immediately for emergency help.

——Checking battery exterior

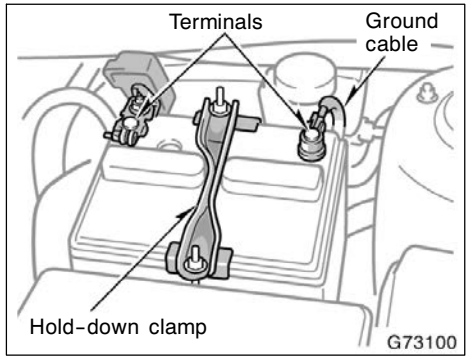

Check the battery for corroded or loose terminal connections, cracks, or loose hold-down clamp.

a. If the battery is corroded, wash it off with a solution of warm water and baking soda. Coat the outside of the terminals with grease to prevent further corrosion.

b. If the terminal connections are loose, tighten their clamp nuts—but do not overtighten.

c. Tighten the hold-down clamp only enough to keep the battery firmly in place. Overtightening may damage the battery case.

NOTICE

- Be sure the engine and all accessories are off before performing maintenance.
- When checking the battery, remove the ground cable from the negative terminal ("–" mark) first and reinstall it last.
- Be careful not to cause a short circuit with tools.
- Take care no solution gets into the battery when washing it.

—Checking battery fluid

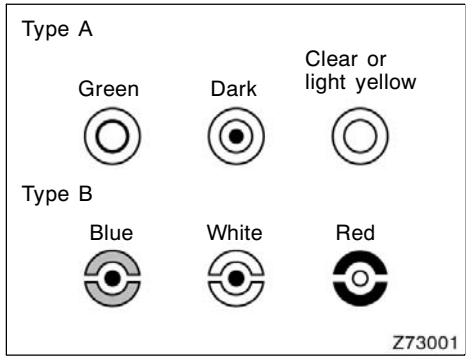

CHECKING BY HYDROMETER

Check the battery condition by the hydrometer color.

Hydrometer color		Condition
Type A	Type B	
Green	Blue	Good
Dark	White	Charging necessary. Have battery checked by your Toyota dealer.
Clear or light yellow	Red	Have battery checked by your Toyota dealer.

Battery recharging precautions

During recharging, the battery is producing hydrogen gas.

Therefore, before recharging:

1. If recharging with the battery installed on the vehicle, be sure to disconnect the ground cable.
2. Be sure the power switch on the recharger is off when connecting the charger cables to the battery and when disconnecting them.

CAUTION

- Always charge the battery in an unconfined area. Do not charge the battery in a garage or closed room where there is not sufficient ventilation.
- Only do a slow charge (5 A or less). Charging at a quicker rate is dangerous. The battery may explode, causing personal injuries.

NOTICE

Never recharge the battery while the engine is running. Also, be sure all accessories are turned off.

Checking and replacing fuses

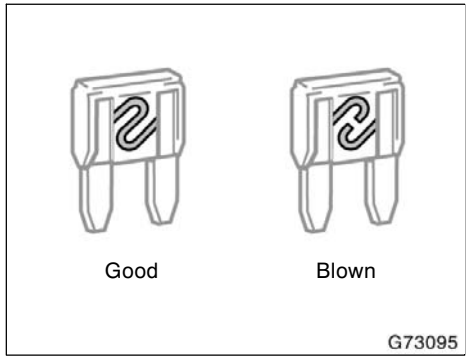

Type A

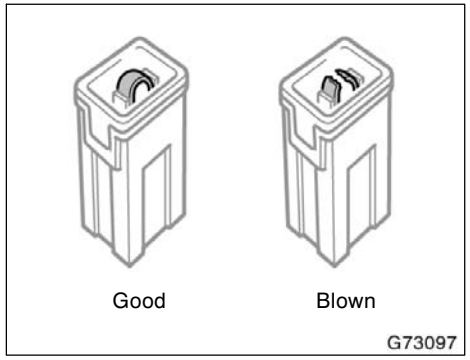

Type C

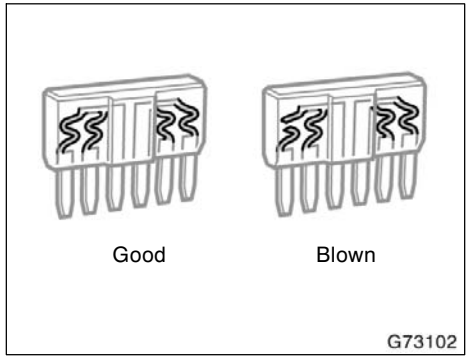

Type B

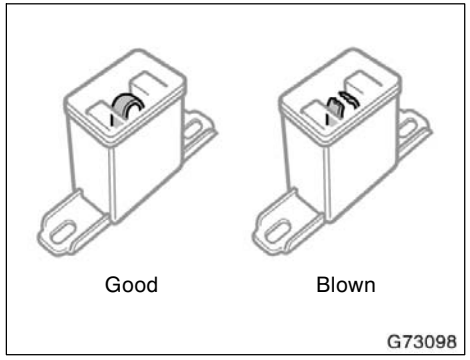

Type D

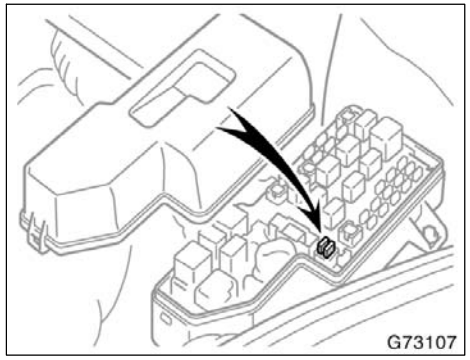

If the headlights or other electrical components do not work, check the fuses. If any of the fuses are blown, they must be replaced.

See “Fuse locations” in Section 7-1 for locations of the fuses.

Turn the ignition switch and inoperative component off. Pull a suspected fuse straight out and check it.

Determine which fuse may be causing the problem. The lid of the fuse box shows the name of the circuit for each fuse. See Section 8 of this manual for the functions controlled by each circuit.

Type A fuses can be pulled out by the pull-out tool. The location of the pull-out tool is shown in the illustration.

If you are not sure whether the fuse has blown, try replacing the suspected fuse with one that you know is good.

If the fuse has blown, push a new fuse into the clip.

Only install a fuse with the amperage rating designated on the fuse box lid.

If you do not have a spare fuse, in an emergency you can pull out the “RADIO”, “CIG” or “HTR” fuse, which may be dispensable for normal driving, and use it if its amperage rating is the same.

If you cannot use one of the same amperage, use one that is lower, but as close as possible to the rating. If the amperage is lower than that specified, the fuse might blow out again but this does not indicate anything wrong. Be sure to get the correct fuse as soon as possible and return the substitute to its original clip.

It is a good idea to purchase a set of spare fuses and keep them in your vehicle for emergencies.

If the new fuse immediately blows out, there is a problem with the electrical system. Have your Toyota dealer correct it as soon as possible.

⚠ CAUTION

Never use a fuse with a higher amperage rating, or any other object, in place of a fuse. This may cause extensive damage and possibly a fire.

Adding washer fluid

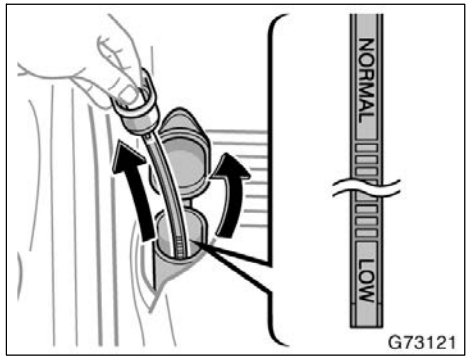

If any washer does not work, the washer tank may be empty. Check the washer fluid level on the level gauge. If the washer fluid level is below “LOW”, add washer fluid.

You may use plain water as washer fluid. However, in cold areas where temperatures range below freezing point, use washer fluid containing antifreeze. This product is available at your Toyota dealer and most auto parts stores. Follow the manufacturer’s directions for how much to mix with water.

NOTICE

Do not use engine antifreeze or any other substitute because it may damage your vehicle's paint.

Replacing light bulbs—

The following illustrations show how to gain access to the bulbs. When replacing a bulb, make sure the ignition switch and light switch are off. Use bulbs with the wattage ratings given in the table.

⚠ CAUTION

Halogen bulbs have pressurized gas inside and require special handling. They can burst or shatter if scratched or dropped. Hold a bulb only by its plastic or metal case. Do not touch the glass part of a bulb with bare hands.

The inside of the lens of exterior lights such as headlights may temporarily fog up when the lens becomes wet in the rain or in a car wash. This is not a problem because the fogging is caused by the temperature difference between the outside and inside of the lens, just like the windshield fogged up in the rain. However, if there is a large drop of water on the inside of the lens, or if there is water pooled inside the light, contact your Toyota dealer.

NOTICE

Only use a bulb of the listed type.

Light bulbs	Bulb No.	W	Type
Headlights (low beam)	—	55	A
Headlights (high beam)	9005	65	B
Front fog light	—	55	C
Parking lights	—	5	D
Front turn signal lights	—	21	E
Front side marker lights	—	5	D
Rear turn signal lights	—	21	D
Stop/tail lights	—	21/5	D
Back-up lights	—	18	D
License plate lights	—	5	D
Interior light (with moon roof)	—	10	E
Interior lights (without moon roof)	—	8	F

Light bulbs	Bulb No.	W	Type
Glove box light	—	1.2	D
Luggage compartment light	—	5	F

A: H7 halogen bulbs
B: HB3 halogen bulbs
C: H3 halogen bulbs
D: Wedge base bulbs
E: Single end bulbs
F: Double end bulbs

—Headlights (low beam)

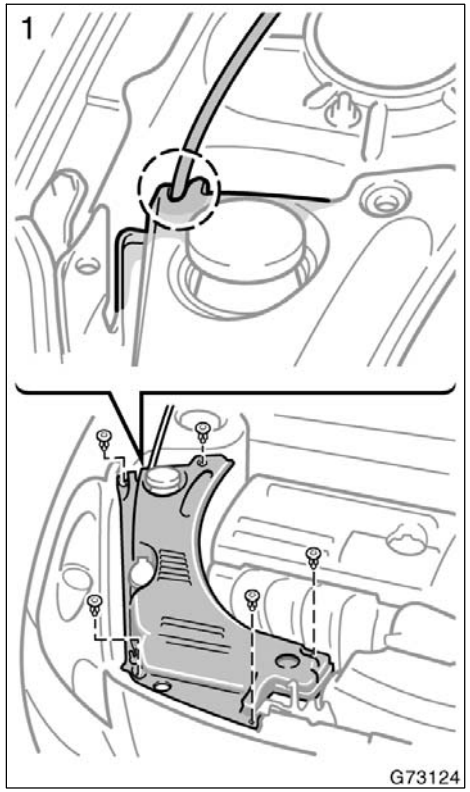

1. Open the hood.

RIGHT SIDE HEADLIGHT—Remove the clips and take out the cover. In doing so, remove the washer hose from the notch on the cover.

Remove and install the cover clips as shown in the following illustrations.

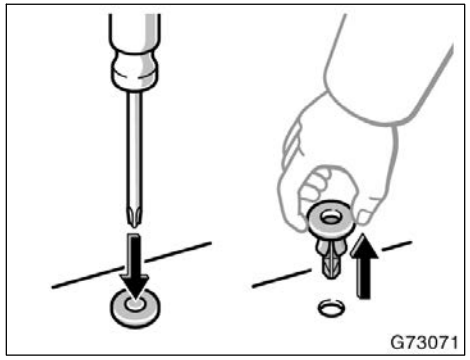

Removing clip

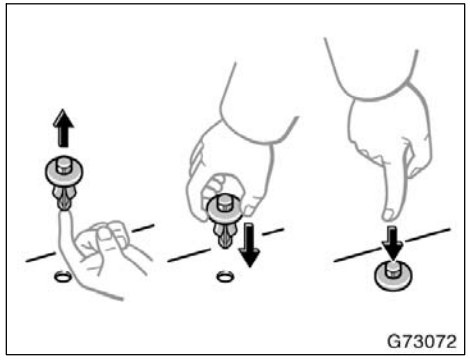

Installing clip

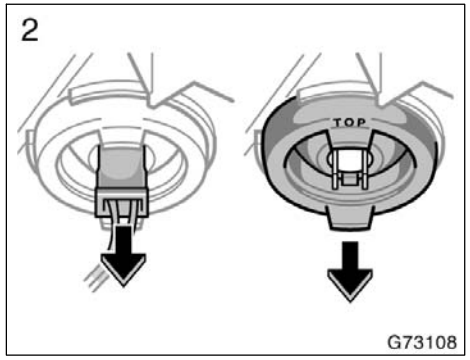

2. Unplug the connector. Remove the rubber cover.

If the connector is tight, wiggle it.

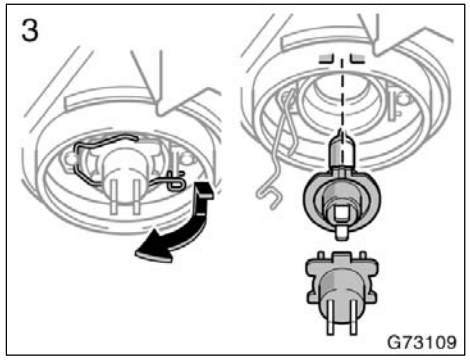

3. Release the bulb retaining spring and remove the bulb along with the socket. Install a new bulb into the socket and return the bulb retaining spring to its original position.

To install a bulb, align the tabs of the bulb with the cutout of the mounting hole.

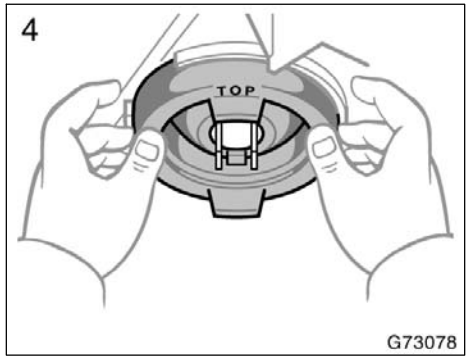

4. Install the rubber cover with the “TOP” mark upward, and snuggle on the boss. Insert the connector.

Make sure the rubber cover fits snugly on the connector and the headlight body.

Aiming is not necessary after replacing the bulb. When aiming adjustment is necessary, contact your Toyota dealer.

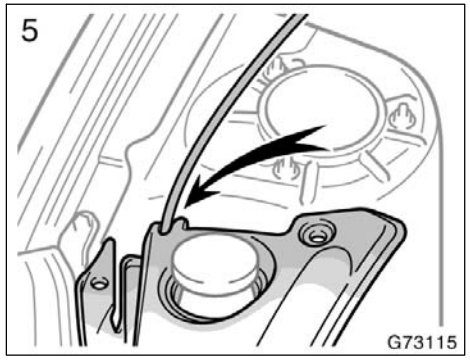

5. RIGHT SIDE HEADLIGHT—Install the cover.

NOTICE
Always notch the washer hose before fastening it when installing the cover. This prevents washer hose damage.

—Headlights (high beam)

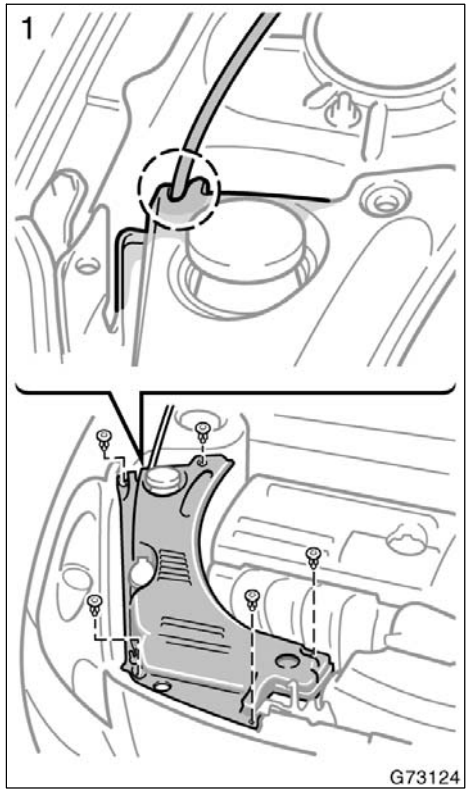

1. Open the hood.

RIGHT SIDE HEADLIGHT—Remove the clips and take out the cover. In doing so, remove the washer hose from the notch on the cover.

Remove and install the cover clips as shown in the following illustrations.

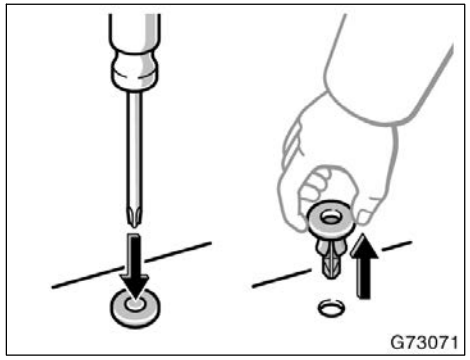

Removing clip

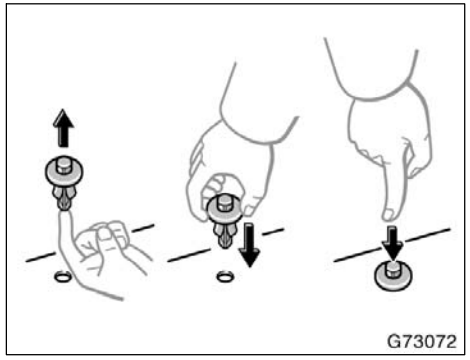

Installing clip

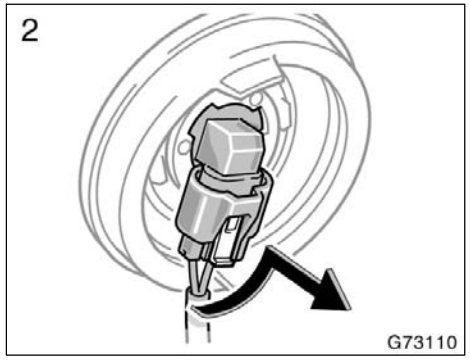

2. Turn the bulb base counterclockwise and remove it.

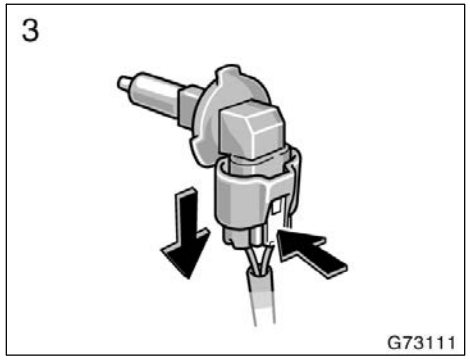

3. Pull the bulb out of the bulb base and install a new bulb.

If the connector is tight, wiggle it.

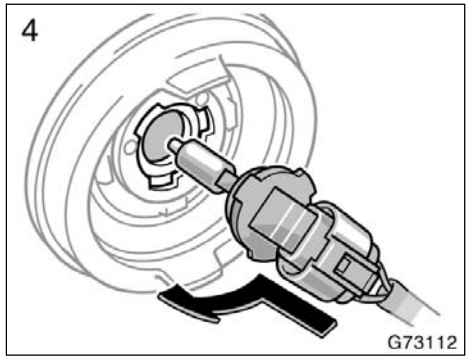

4. Insert the bulb base into the mounting hole by turning it clockwise.

Aiming is not necessary after replacing the bulb. When aiming adjustment is necessary, contact your Toyota dealer.

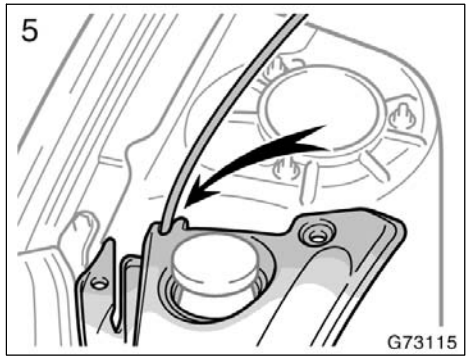

5. RIGHT SIDE HEADLIGHT—Install the cover.

NOTICE

Always notch the washer hose before fastening it when installing the cover. This prevents washer hose damage.

—Front fog and front side marker lights

If either the left or right front fog or front side marker lights burns out, contact your Toyota dealer.

NOTICE
Do not try to replace the front fog or front side marker light bulbs by yourself. You may damage the vehicle.

—Parking lights

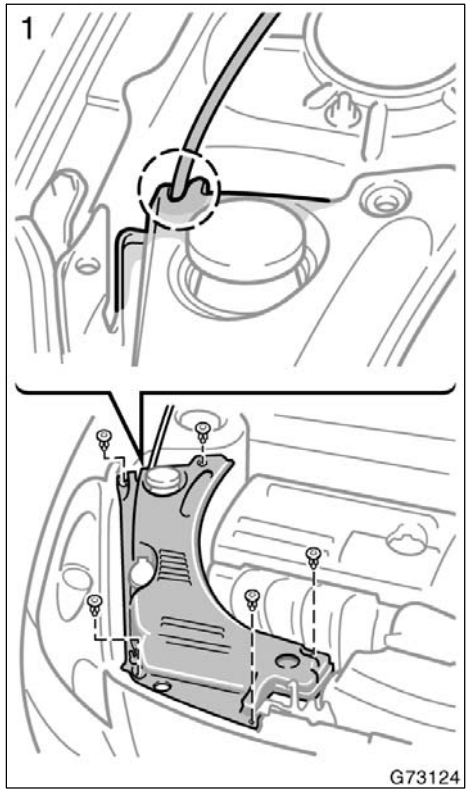

RIGHT SIDE PARKING LIGHT—Remove and install the clips as shown in the following illustrations.

NOTICE
Always notch the washer hose before fastening it when installing the cover. This prevents washer hose damage.

—Front turn signal lights

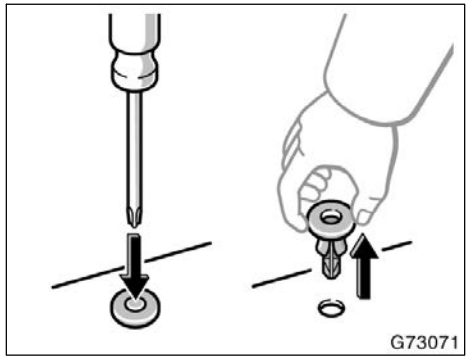

Removing clip

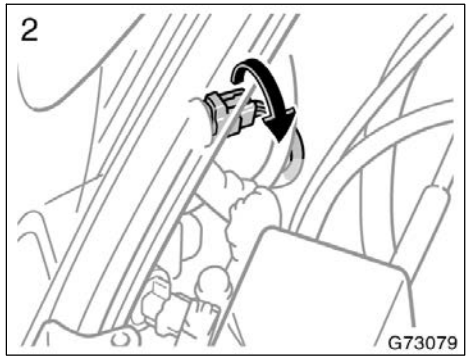

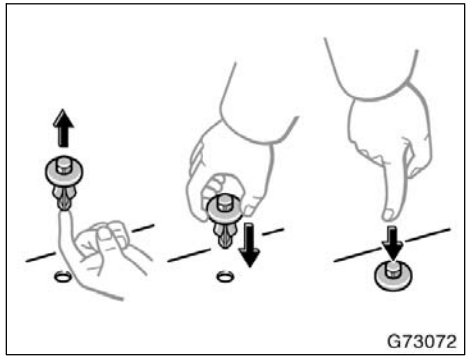

Installing clip

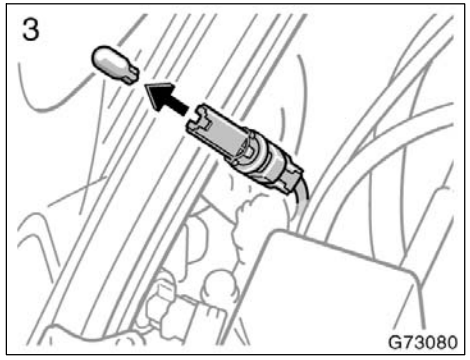

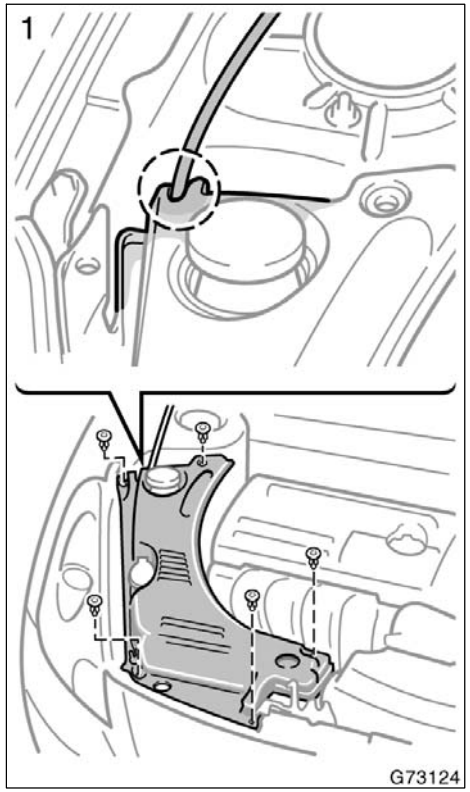

RIGHT SIDE FRONT TURN SIGNAL LIGHT—Remove and install the clips as shown in the following illustrations.

NOTICE
Always notch the washer hose before fastening it when installing the cover. This prevents washer hose damage.

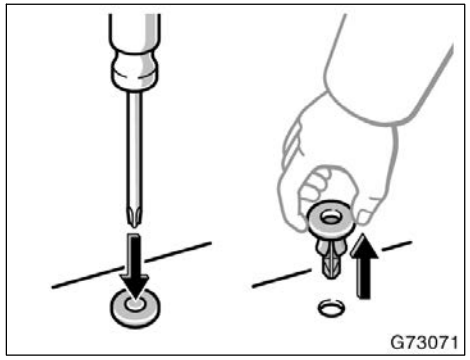

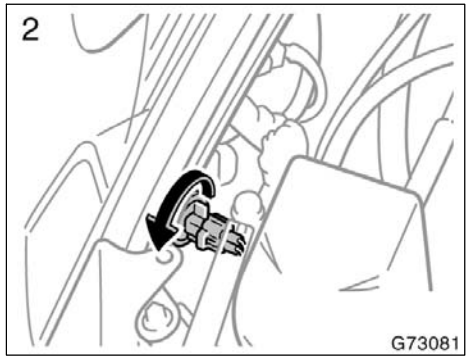

Removing clip

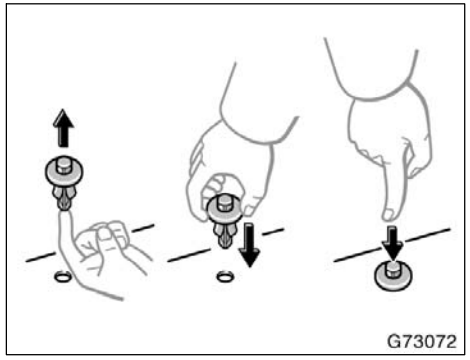

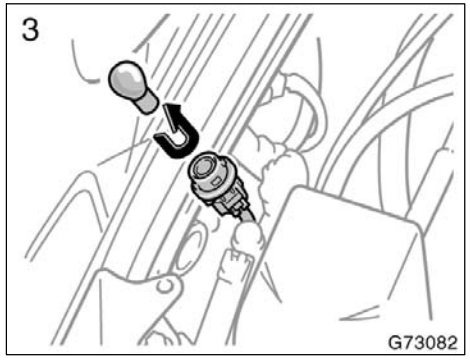

Installing clip

—Rear turn signal, stop/tail, and back-up lights

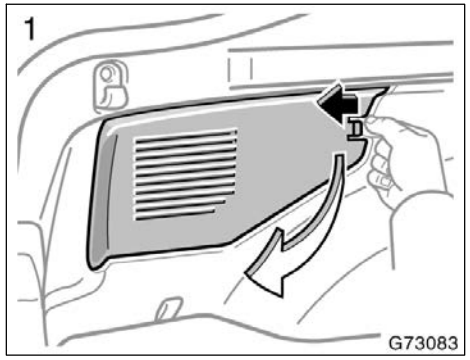

Remove the cover.

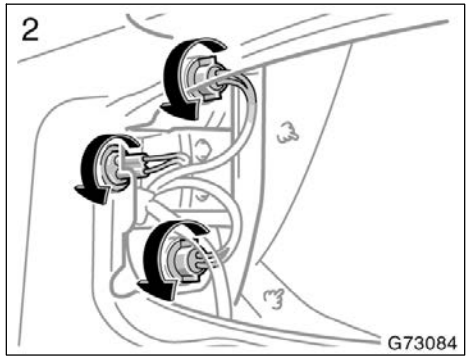

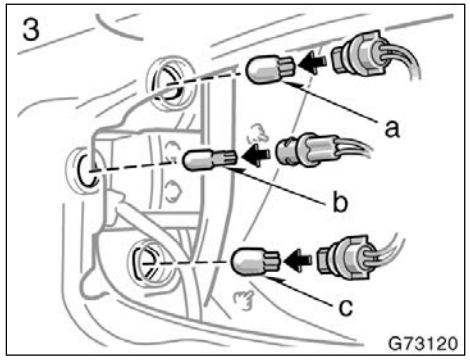

a: Stop/tail light
b: Back-up light
c: Rear turn signal light

—License plate lights

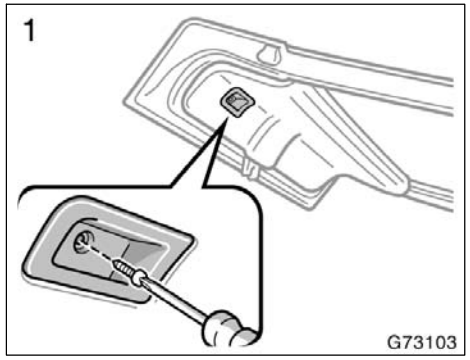

Use a Phillips-head screwdriver.

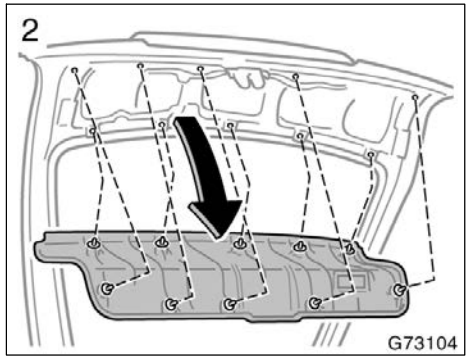

Remove the cover.

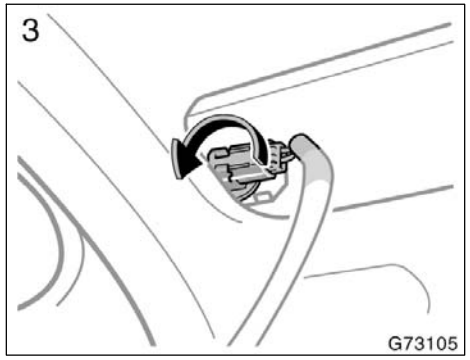
3
G73105

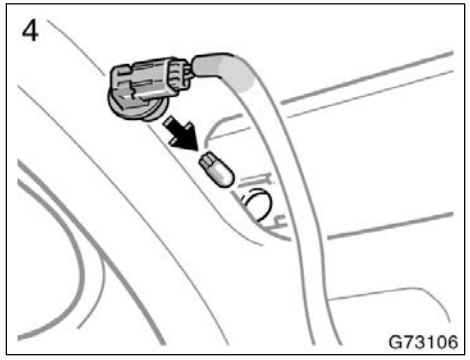
4
G73106

SECTION 8

SPECIFICATIONS

Dimensions and weight 222
Engine 222
Fuel 222
Service specifications 223
Tires 225
Fuses 226

Dimensions and weight

Overall length	mm (in.)	4330	(170.5)
Overall width	mm (in.)	1735	(68.3)
Overall height	mm (in.)	1305	(51.8)*
Wheelbase	mm (in.)	2600	(102.4)
Front tread	mm (in.)	1490	(58.7)
Rear tread	mm (in.)	1480	(58.3)
Vehicle capacity weight (occupants + luggage)	kg (lb.)	329	(725)

*: Unladen vehicle

Engine

Model:
1ZZ-FE and 2ZZ-GE

Type:
4 cylinder in line, 4 cycle, gasoline

Bore and stroke, mm (in.):
1ZZ-FE engine
79.0 □ 91.5 (3.11 □ 3.60)
2ZZ-GE engine
82.0 □ 85.0 (3.23 □ 3.35)

Displacement, cm^3 (cu. in.):
1ZZ-FE engine 1794 (109.5)
2ZZ-GE engine 1796 (109.6)

Fuel

Fuel type:

1ZZ-FE engine
Unleaded gasoline, Octane Rating 87 (Research Octane Number 91) or higher

2ZZ-GE engine
Select premium unleaded gasoline with an Octane Rating of 91 (Research Octane Number 96) or higher for optimum engine performance

Fuel tank capacity, L (gal., Imp. gal.):
55 (14.5, 12.1)

Service specifications

ENGINE

Valve clearance (engine cold), mm (in.):

1ZZ-FE engine

Intake	0.15—0.25 (0.006—0.010)
Exhaust	0.25—0.35 (0.010—0.014)

2ZZ-GE engine (on a roller side)

Intake	0.08—0.18 (0.003—0.007)
Exhaust	0.22—0.32 (0.009—0.013)

Spark plug type:

1ZZ-FE engine

DENSO	SK16R11
NGK	IFR5A11

2ZZ-GE engine

DENSO	SK20R11
NGK	IFR6A11

Spark plug gap, mm (in.):
1.1 (0.043)

ENGINE LUBRICATION

Oil capacity (drain and refill),
L (qt., Imp. qt.):

1ZZ-FE engine

With filter	3.7 (3.9, 3.3)
Without filter	3.5 (3.7, 3.1)

2ZZ-GE engine

With filter	4.4 (4.8, 4.0)
Without filter	4.2 (4.6, 3.8)

Oil grade:
API grade SJ, "Energy-Conserving" or ILSAC multigrade engine oil is recommended.

Recommended oil viscosity (SAE):

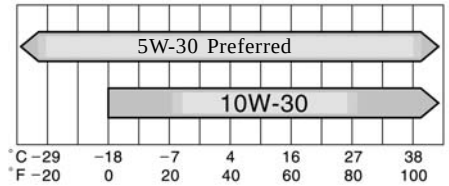

Temperature range anticipated before next oil change

OIL005

COOLING SYSTEM

Total capacity, L (qt., Imp. qt.):

1ZZ-FE engine

Manual transaxle	5.7 (6.0, 5.0)
Automatic transaxle	5.6 (5.9, 4.9)

2ZZ-GE engine

Manual transaxle	5.9 (6.2, 5.2)
Automatic transaxle	5.8 (6.1, 5.1)

Coolant type:

"TOYOTA Long Life Coolant" or equivalent

With ethylene-glycol type coolant for a proper corrosion protection of aluminum components

Do not use alcohol type antifreeze or plain water alone.

BATTERY

Open voltage* at 20°C (68°F):

12.6—12.8 V	Fully charged
12.2—12.4 V	Half charged
11.8—12.0 V	Discharged

*: Voltage that is checked 20 minutes after the key is removed with all the lights turned off

Charging rates:
5 A max.

CLUTCH

Pedal free play, mm (in.):
5—15 (0.2—0.6)

Fluid type:
SAE J1703 or FMVSS No.116 DOT 3

MANUAL TRANSAXLE

Oil capacity, L (qt., Imp. qt.):
1ZZ-FE engine
1.9 (2.0, 1.7)
2ZZ-GE engine
2.3 (2.4 2.0)

Oil type:
Gear oil API GL-4 or GL-5

Recommended oil viscosity:
SAE 75W-90

AUTOMATIC TRANSAXLE

Fluid capacity (drain and refill),
L (qt., Imp. qt.):
1ZZ-FE engine
Up to 2.9 (3.1, 2.6)
2ZZ-GE engine
Up to 4.0 (4.2, 3.5)

Fluid type:
Automatic transmission fluid Type T-IV

Change automatic transmission fluid only as necessary.

Generally, it is necessary to change automatic transmission fluid only if your vehicle is driven under one of the Special Operating Conditions listed in your “Scheduled Maintenance Guide” or “Owner’s Manual Supplement”. When changing the automatic transmission fluid, use only Toyota Genuine ATF Type T-IV (ATF JWS3309 or NWS6500) to aid in assuring optimum transaxle performance.

Notice: Using automatic transmission fluid other than Toyota Genuine ATF Type T-IV may cause deterioration in shift quality, locking up of your transmission accompanied by vibration, and ultimately damage the automatic transmission of your vehicle.

BRAKES

Minimum pedal clearance when depressed with the force of 490 N (50 kgf, 110 lbf) with the engine running, mm (in.):
85 (3.4)

Pedal free play, mm (in.):
1—6 (0.04—0.24)

Pad wear limit, mm (in.):
1.0 (0.04)

Lining wear limit, mm (in.):
1.0 (0.04)

Parking brake adjustment when pulled with the force of 196 N (20 kgf, 44 lbf):
7—8 clicks

Fluid type:
SAE J1703 or FMVSS No.116 DOT 3

STEERING

Wheel free play:
Less than 30 mm (1.2 in.)

Power steering fluid type:
Automatic transmission fluid DEXRON®II or III

Tires

Tire size and pressure:

Except spare tire

Model	Tire size	Tire pressure kPa (kgf/cm^2 or bar, psi)		Wheel size
		Front	Rear	
1ZZ-FE engine	195/60R15 88H	210 (2.1, 29)	210 (2.1, 29)	15 □ 6 1/2JJ
	P195/60R15 87H	210 (2.1, 29)	210 (2.1, 29)	15 □ 6 1/2JJ
2ZZ-GE engine	205/55R15 87V	220 (2.2, 32)	220 (2.2, 32)	15 □ 6 1/2JJ
	P205/55R15 87V	220 (2.2, 32)	220 (2.2, 32)	15 □ 6 1/2JJ
	205/50R16 87V	220 (2.2, 32)	220 (2.2, 32)	16 □ 6 1/2JJ

Spare tire

	Tire size	Tire pressure kPa (kgf/cm^2 or bar, psi)	Wheel size
U.S.A	T125/70D16 96M	420 (4.2, 60)	16 □ 4T
Canada	Same as original tire		

Wheel nut torque, N·m (kgf·m, ft·lbf):
103 (10.5, 76)

NOTE: For a complete information on tires (e.g. replacing tires or replacing wheels), see "Checking tire pressure" through "Aluminum wheel precautions" in Section 7-2.

Fuses

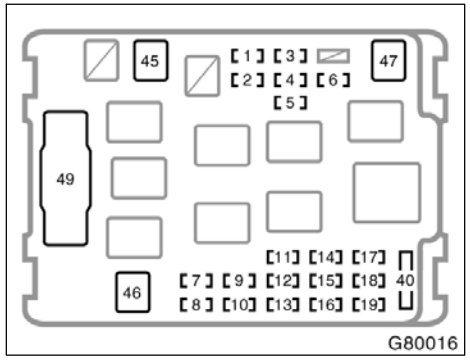

Engine compartment

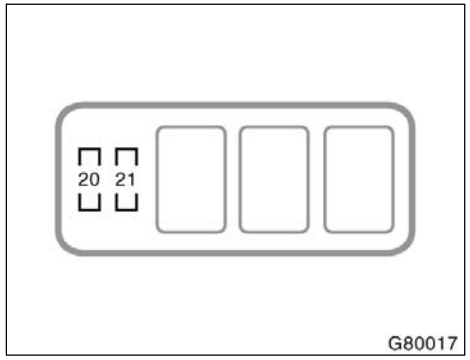

Engine compartment

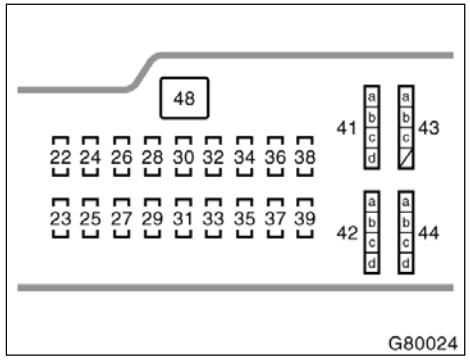

Instrument panel

Fuses (type A)

1. HEAD LH LWR 10 A: Left-hand headlight (low beam)
2. ABS NO.2 25 A: Anti-lock brake system
3. HEAD RH UPR 20 A: Right-hand headlight (high beam)
4. DRL NO.1 7.5 A: Daytime running light system
5. HEAD RH LWR 10 A: Right-hand headlight (low beam)
6. HEAD LH UPR 10 A: Left-hand headlight (high beam)
7. IG2 15 A: Starting system, multiport fuel injection system/sequential multiport fuel injection system
8. HAZ 10 A: Emergency flashers, turn signal lights, theft deterrent system
9. ST 7.5 A: Starting system, multiport fuel injection system/sequential multiport fuel injection system
10. AM2 7.5 A: Starting system
11. SPARE 10 A: Spare fuse
12. EFI NO.2 7.5 A: Multiport fuel injection system/sequential multiport fuel injection system, emission control system
13. EFI 15 A: Multiport fuel injection system/sequential multiport fuel injection system, “EFI NO.1” and “EFI NO.2” fuses
14. SPARE 15 A: Spare fuse
15. EFI NO.1 7.5 A: Multiport fuel injection system/sequential multiport fuel injection system
16. DCC 25 A: “RADIO”, “DOME”, “MPX-B” and “ECU-B” fuses
17. SPARE 30 A: Spare fuse
18. HORN 10 A: Horn
19. ALT-S 7.5 A: Charging system

20. HEAD RH UPR 10 A: Right-hand headlight (high beam), daytime running light system
21. HEAD LH UPR 10 A: Left-hand headlight (high beam)
22. S/ROOF 15 A: Electric moon roof
23. CIG 15 A: Cigarette lighter
24. FL P/W 20 A: Power windows
25. AM1 25 A: Starting system, "CIG", "ECU ACC", "SRS-IG", "WASHER", "WIPER", "BK/UP LP", "TENS RDC", "DEF RLY", "BODY ECU-IG", "TURN", "HTR", "WARNING", "FAN RLY", "ABS-IG" and "ECU-IG" fuses
26. STOP 10 A: Stop lights, anti-lock brake system, high mounted stoplight, multiport fuel injection system/sequential multiport fuel injection system, electronically controlled automatic transmission system, cruise control system
27. DOOR 20 A: Power door lock system
28. SRS-IG 7.5 A: SRS airbag system
29. FR FOG 15 A: Front fog lights
30. WASHER 15 A: Windshield wipers and washer, rear window wiper and washer
31. OBD 7.5 A: On-board diagnosis system
32. RADIO 15 A: Car audio system
33. WIPER 25 A: Windshield wipers and washer
34. TURN 7.5 A: Turn signal lights
35. MIR HTR 10 A: No circuit
36. HTR 10 A: Air conditioning system
37. RR WIPER 15 A: Rear window wiper and washer
38. TAIL 10 A: Tail lights, instrument panel lights, license plate lights, front side maker lights
39. FR P/W 20 A: Power windows

Fuses (type B)

40. SPARE 7.5 A: Spare fuse
41. a. MPX-B 7.5 A: Wireless remote control system
    b. RR FOG 7.5 A: No circuit
    c. DOME 7.5 A: Clock, interior lights
    d. ECU-B 7.5 A: Air conditioning system, gauges and meters
42. a. WARNING 5 A: Charging system, gauges and meters
    b. ECU-IG 5 A: Cruise control system
    c. ABS-IG 5 A: Anti-lock brake system
    d. FAN RLY 5 A: Electric cooling fans
43. a. PANEL1 7.5 A: Car audio system, cigarette lighter, glove box light
    b. PANEL2 7.5 A: Gauges and meters, air conditioning system, electronically controlled automatic transmission system, headlight beam level control system, front fog lights, emergency flasher, turn signal lights
    c. ECU-ACC 7.5 A: Clock, car audio system, power rear view mirror controls
44. a. BK/UP LP 5 A: Back-up lights
    b. DEF RLY 5 A: Power windows, rear window defogger
    c. BODY ECU-IG 5 A: Multiplex communication system
    d. TENS RDC 5 A: Electronically controlled automatic transmission system, shift lock control system, electric moon roof

Fuses (type C)

45. ABS NO.1 40 A: Anti-lock brake system
46. MAIN 40 A: Starting system, daytime running light system
47. HTR 50 A: Air conditioning system
48. DEF 30 A: Rear window defogger

Fuses (type D)

49. ALT 120 A: Cooling system, electric cooling fans, starting system, rear window defogger, tail lights, “ABS NO.1”, “ABS NO.2”, “HTR”, “FR P/W”, “FL P/W”, “DOOR”, “OBD”, “STOP”, “S/ROOF”, “MIR HTR”, “FR FOG” and “AM1” fuses

SECTION 9

REPORTING SAFETY DEFECTS FOR U.S. OWNERS AND UNIFORM TIRE QUALITY GRADING

Reporting safety defects for U.S. ownersrs 230
Uniform tire quality grading 230

Reporting safety defects for U.S. owners

If you believe that your vehicle has a defect which could cause a crash or could cause injury or death, you should immediately inform the National Highway Traffic Safety Administration (NHTSA) in addition to notifying Toyota Motor Sales, U.S.A., Inc.
(Toll-free: 1-800-331-4331).

If NHTSA receives similar complaints, it may open an investigation, and if it finds that a safety defect exists in a group of vehicles, it may order a recall and remedy campaign. However, NHTSA cannot become involved in individual problems between you, your dealer, or Toyota Motor Sales, U.S.A., Inc.

To contact NHTSA, you may either call the Auto Safety Hotline toll-free at 1-800-424-9393 (or 366-0123 in Washington, D.C. area) or write to: NHTSA, U.S. Department of Transportation, Washington, D.C. 20590. You can also obtain other information about motor vehicle safety from the Hotline.

Uniform tire quality grading

This information has been prepared in accordance with regulations issued by the National Highway Traffic Safety Administration of the U.S. Department of Transportation. It provides the purchasers and/or prospective purchasers of Toyota vehicles with information on uniform tire quality grading.

Your Toyota dealer will help answer any questions you may have as you read this information.

DOT quality grades—All passenger car tires must conform to Federal Safety Requirements in addition to these grades. Quality grades can be found where applicable on the tire sidewall between tread shoulder and maximum section width. For example: Treadwear 200 Traction AA Temperature A

Treadwear—The treadwear grade is a comparative rating based on the wear rate of the tire when tested under controlled conditions on a specified government test course. For example, a tire graded 150 would wear one and a half (1 1/2) times as well on the government course as a tire graded 100. The relative performance of tires depends upon the actual conditions of their use, however, and may depart significantly from the norm due to variations in driving habits, service practices and differences in road characteristics and climate.

Traction AA, A, B, C—The traction grades, from highest to lowest, are AA, A, B, and C, and they represent the tire’s ability to stop on wet pavement as measured under controlled conditions on specified government test surfaces of asphalt and concrete. A tire marked C may have poor traction performance.

Warning: The traction grade assigned to this tire is based on braking (straightahead) traction tests and does not include cornering (turning) traction.

Temperature A, B, C—The temperature grades are A (the highest), B, and C, representing the tire’s resistance to the generation of heat and its ability to dissipate heat when tested under controlled conditions on a specified indoor laboratory test wheel. Sustained high temperature can cause the material of the tire to degenerate and reduce tire life, and excessive temperature can lead to sudden tire failure. The grade C corresponds to a level of performance which all passenger car tires must meet under the Federal Motor Vehicle Safety Standard No.109. Grades B and A represent higher levels of performance on the laboratory test wheel than the minimum required by law.

Warning: The temperature grades for this tire are established for a tire that is properly inflated and not overloaded. Excessive speed, underinflation, or excessive loading, either separately or in combination, can cause heat buildup and possible tire failure.

¿U –4

Quick index

- If a service reminder indicator or warning buzzer comes on 76
- If your vehicle will not start 154
- If your engine stalls while driving 157
- If your vehicle overheats 157
- If you have a flat tire 158
- If your vehicle needs to be towed 167
- Tips for driving during break-in period 126
- How to start the engine 140
- General maintenance 181
- Complete index .....

Gas station information

Fuel type:

1ZZ-FE engine: UNLEADED gasoline, Octane Rating 87 (Research Octane Number 91) or higher
2ZZ-GE engine: Premium UNLEADED gasoline, Octane Rating 91 (Research Octane Number 96) or higher

See page 126 for detailed information.

Fuel tank capacity:
55 L (14.5 gal., 12.1 Imp. gal.)

Engine oil:
API grade SJ, “Energy-Conserving” or ILSAC multigrade engine oil is recommended.

See page 194 for detailed information.

Tire information: See pages 198 through 202.

Tire pressure: See page 225.

2001 CELICA (20766U)

Publication No. OM20766U
Part No. 01999-20766
Printed in Japan 01-0008-00 C
¿¿¿(¿¿U)

WE REALLY CARE ABOUT YOU — PLEASE BUCKLE UP

Toyota has made a special effort to encourage use of seat belts.

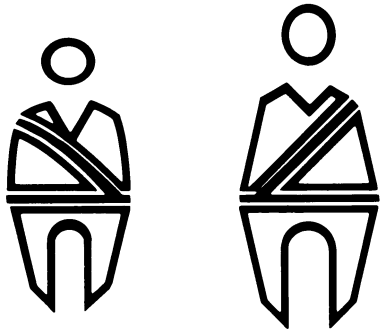

Toyota belts are:

- Comfortable
- Easy to use
- Convenient

We encourage you to use your belts every time you drive.

You should know as much about the quality and importance of proper maintenance of your new vehicle as the people who built it.

The Toyota authorized Repair Manual tells you how to maintain your vehicle and enables you to correctly perform your own maintenance.

2001 CELICA (20766U)

The best way to keep your new vehicle in top running order is to maintain it properly from the moment you drive it off the showroom floor.

The Toyota authorized Repair Manual is packed with literally everything you need to know to perform your own maintenance in virtually every area of your new vehicle.

Maintenance procedures for the engine, chassis, body, electrical system, and more, are clearly explained and illustrated.

Periodic maintenance and tune–up

Periodic maintenance and tune–up helps to prevent small problems from growing into larger ones later on. The repair manual outlines exactly what maintenance is required and clearly explains how to do the work yourself step–by–step.

Areas covered include such things as spark plug replacement, valve clearance adjustment and engine oil and filter replacement.

Where to obtain the Repair Manual

The repair manual for CELICA, written in English, may be purchased as applicable from any Toyota dealer.

Pub. Name: 2001 CELICA Repair Manual

Pub. No.: RM818U1 (Maintenance, Preparation, Service specifications and Diagnostics)
RM818U2 (Engine, Chassis and Body)