Kawasaki
Versys
auteco
motocicletas
Year & Model
Color
VIN No. Range
Engine No. Range
'07 KLE650 A7F
1. Atomic Silver (17M)
2. Candy Burnt Orange (17L)
3. Ebony (H8)
JKALE650AAA000001~
ER650AE000001~
Kawasaki
CATÁLOGO DE PARTES

AVISO IMPORTANTE

Recuerde hacer los cambios de aceite de motor (2.250 cc de aceite 20W50 o 10W40 API SG + JASO MA) según la TABLA DE MANTENIMIENTO PERIÓDICO (Máximo cada 2.000 Kms. de recorrido) .

No lave la moto con agua a presión, ni con vapor, ni con el motor caliente. Estos procedimientos pueden ocasionar daños en sus componentes eléctricos.

PREFACIO

Es nuestro placer presentarles a ustedes el Catálogo de Partes.

Este Catálogo ha sido especialmente diseñado para ayudarle en la selección de las partes correctas con el fin de mantener el vehículo en las mejores condiciones.

Los repuestos originales están sujetos a un exigente estándar de control de calidad, por lo tanto es necesario que usted sólo use repuestos originales.

En nuestro constante esfuerzo para mejorar la eficiencia y desempeño de su vehículo, las especificaciones, diagramas y número de partes pueden cambiar sin previo aviso. Consecuentemente las descripciones de los repuestos en este Catálogo pueden no ser las finales y definitivas.

Las alteraciones y modificaciones que ocurren en la impresión de este Catálogo, serán informadas a nuestra red, a través de circulares de Servicio. Es requisito que usted actualice su Catálogo y haga las correcciones necesarias, una vez reciba dichas circulares. Lo anterior le asegurará un rápido y adecuado despacho de sus partes, pues las órdenes están siendo diligenciadas con las referencias más actualizadas.

En caso de necesitar asistencia técnica, comunicarse con el Distribuidor Autorizado o llamar al Departamento de Servicios Auteco-Kawasaki.

Todos los derechos reservados, No se permite la reproducción total o parcial de este libro, en ninguna forma o por ningún medio, ya sea electrónico o mecánico, incluido fotocopiado, sin permiso escrito de Autotecnica Colombiana S.A. "AUTECO S.A."

REVISADO MARZO DE 2007 (Edición No. 1)

DIRECTORIO TELEFÓNICO - DIVISION REPUESTOS

NOMBRE	CARGO	CELULAR	PBX Y EXT.
ALVARO VÉLEZ V.	JEFE LINEAS ESPECIALES	03310-3739023	373 00 45 EXT. 110
JOSE IGNACIO ROJAS L.	JEFE LINEAS ORIGINALES	03313-767 78 36	373 00 45 EXT. 117
ALEXANDER GRAJALES	VENTAS	03310-3739019	373 00 45 EXT. 112
BERNARDO MURIEL G.	VENTAS	03310-4362742	373 00 45 EXT. 127
CARLOS H. TOBON R.	VENTAS	03310-4473611	373 00 45 EXT. 106
CARLOS MARIO SALAZAR	VENTAS	03310-4148845	373 00 45 EXT. 108
ELKIN GALLEGO R.	VENTAS	03310-4362598	373 00 45 EXT. 107
GONZALO A. SALDARRIAGA S.	VENTAS	03310-4068874	373 00 45 EXT. 102
HECTOR A. VALENCIA R.	VENTAS	03310-4473652	373 00 45 EXT. 104
HECTOR JAIRO LOPEZ C.	VENTAS	03312-2576791	373 00 45 EXT. 137
JOHN JAIRO LÓPEZ CH.	VENTAS	03310-4442215	373 00 45 EXT. 105
NESTOR R. ADARVE	VENTAS	03310-4362689	373 00 45 EXT. 128
UBERNEY ORTIZ V.	VENTAS	03313-6727337	373 00 45 EXT. 115
WILLIAM GUTIÉRREZ CH.	VENTAS	03310-4074072	373 00 45 EXT. 133
MAURICIO MEJÍA	VENTAS	03312-2576175	373 00 45 EXT. 275
GABRIEL JAIME CARMONA	VENTAS ORIGINALES	03313-7677843	373 00 45 EXT. 126
JORGE GIL	VENTAS ORIGINALES	03313-6727353	373 00 45 EXT. 138
JORGE MARIO MAYA V.	VENTAS ORIGINALES	03312-2589384	373 00 45 EXT. 140

DIAGONAL 38 A Nº 34-56 B. SAN JOSE ITAGUI FAX BODEGA: 373 83 94 FAX OFICINAS: 373 03 75		
SERVICIO AL CLIENTE	ANDRES CARDONA	373 41 41 EXT. 125
FACTURACIÓN	RICARDO CUARTAS	373 41 41 EXT. 121
DEVOLUCIONES RECLAMOS Y MOTOS VARADAS	ALEJANDRO POSADA Y JUAN GMO. GARCIA	373 41 41 EXT. 135
VENTAS AL PUBLICO	JULIAN BEDOYA	373 49 33

LINEA GRATUITA SERVICIO AL CLIENTE - ACLARA - 01 8000 52 00 90

Air Cleaner....B-6
Balancer....B-11
Brake Pedal....F-3
Cables....F-13
Camshaft(s)....B-9
Chain Cover....F-14
Chassis Electrical Equipment....G-7
Clutch....B-12
Cowling....G-13
Crankcase....C-4/C-5
Crankcase Bolt Pattern....C-6
Crankshaft....B-10
Cylinder....B-5
Cylinder Head....B-3
Cylinder Head Cover....B-4
Decals(Orange)(Ebony)....G-12
Decals(Silver)....G-11
Engine Cover(s)....C-7
Engine Mount....E-4
Footrests....E-8
Frame....E-3
Frame Fittings....E-5
Front Brake....F-5
Front Fender(s)....E-9
Front Fork....F-9
Front Hub....E-13
Front Master Cylinder....F-4
Fuel Injection....C-11
Fuel Pump....C-10
Fuel Tank....F-10
Gear Change Drum....B-14
Gear Change Mechanism....C-3
Generator....C-13
Handlebar....F-8
Headlight(s)....G-4
Ignition Switch....G-8
Ignition System....C-14
Labels....G-10
Manual....G-14
Meter(s)....F-12
Muffler(s)....B-7
Oil Pan....C-8
Oil Pump....C-12
Owner's Tools....G-9
Piston(s)....B-5
Radiator....D-5
Rear Brake....F-7
Rear Fender(s)....E-10
Rear Hub....E-14
Rear Master Cylinder....F-6
Seat....F-11
Seat Cover....G-3
Shift Fork(s)....B-14
Shock Absorber....E-7
Side Covers....F-14
Stand(s)....E-11
Starter Motor....D-3
Suspension....E-7
Swingarm....E-6
Taillight(s)....G-5
Tensioner....B-9
Throttle....C-9
Tires....E-12
Transmission....B-13
Turn Signals....G-6
Valve(s)....B-8
Water Pipe....D-6
Water Pump....D-4

PARTS LIST INFORMATION

This parts catalog lists parts and sub-assemblies provided as spare parts.
When it becomes necessary to replace parts always use KAWASAKI GENUINE PARTS. Strict inspection assures quality and performance of KAWASAKI GENUINE PARTS.

1. HOW TO ODER PARTS

When ordering parts be sure to use the catalog for the correct model and year of the vehicle. Include the following items exactly as listed in this catalog on your parts order.

Part Number
Part Name
Color Code

Specify the color using both color code (which is part of the part number) and name when ordering painted parts.

Example: 51001-5074-H8 TANK-COMP-FUEL,EBONY

Parts not shown disassembled in the illustrations of this parts catalog are not sold separately; only the complete units or next higher assemblies illustrated, are supplied, as spare parts.

2. EXPLANATION OF PARTS CATALOG FORMAT

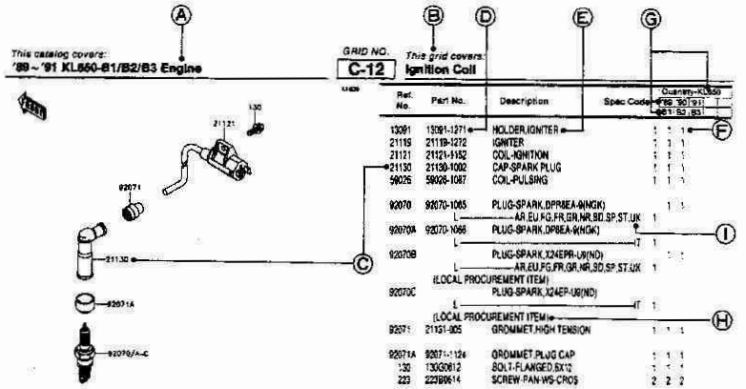

A. Year & Model Title
This title describes the year(s) and model(s) contained in this catalog.

B. Part Group Title
A representative name for the group of parts illustrated on this page.

C. Referernce Number
The reference number is listed on the illustration and parts list. It is the link between the illustration and the parts list.

D. Part Number
The number assigned to a part for the purpose of parts ordering.

1) Part Number (New Structure)
00000 – 0000 – 00 or 00000 – 0000 – 000 (Old Structure) 00000 – 000 – 00

Color Code
Production Number
Function Code

2) Standard Hardware Number
000 0 0000

Size Number
Material or Surface Treatment Code (Alphabet)
Item Number

E. Description
Describes the main function of the part and includes data such as size, number of teeth, color,etc.

List of Abbreviations

(+)	Plus	HEX	Hexagonal	REF	Reference
(-)	Minus	ID =	Inside Diameter	RH	Right Hand
&	And	KPH	Kilometers Per Hour	RPM	Revolutions Per Minute
2ND	Second	L	Link	RR	Rear
3RD	Third	L =	Length	STD	Standard
4TH	Fourth	U/	Less	T	Teeth
AR	As Required	LH	Left Hand	T =	Thickness
ASSY	Assembly	LWR	Lower	U/S	Under Size
CA	Cut Away	MM	Millimeter	UPP	Upper
CNT	Center	MPH	Miles Per Hour	V	Volt
COMP	Complete	NA	Not Available	W	Watt
D	Degree	O/S	Over Size	W/	With
FR	Front	OD =	Outside Diameter	WD	With Decal
G	Gram	PR	Ply Rating	WOD	Without Decal

F. Quantity
Specifies how many of a part are required at the indicated position on the illustration.

G. Year & Model
Indicates which parts are used for a specific vehicle year and model.

H. Additional Information
Additional Information is shown as follows:
1) (OPTION) Part is not installed as original equipment, but is available seperately.
2) (RACING USE ONLY) Part is to be used for closed course racing only on this vehicle.
3) (OFF-ROAD USE ONLY) Part is for off-road use only this vehicle.
4) (LOCAL PROCUREMENT ITEM) Part is obtainable from a local source. No part number is listed.
5) Technical relationships between old part numbers and new part numbers are shown as follows:
INTERCHANGE - Old part or new part can be used.
SUBSTITUTE - New part replaces old part. Old part cannot be used in place of new part.
6) Mid-Year part number changes on a vehicle are noted by engine or frame number references.

(- KZ400DE001181)	Affected units are from beginning of model year production up to and including this engine number.
(KZ400D-008111 -)	Affected units are from this frame number to the end of model year production.
(KZ400DE008181 - KZ400DE018888)	Affected units are in this engine number range.

I. Specification Code
Identifies the specification of the vehicle for which the part applies. If no spec code is listed, that means the part is used for all specifications.

Spec Code	Specification	'07 A7F				
UK	United Kingdom	O				
WV	Whole Vehicle Type Approval	O				

'07 KLE650A7F

O : Applicable ×: Not applicable

Color: Atomic Silver (17M) **(1)**

Part No.	Description	Spec.Code												
		UK	WV											
14091-0739-458	COVER,PIVOT,LH,P.SILVER	O	O											
14091-0740-458	COVER,PIVOT,RH,P.SILVER	O	O											
14091-0750-458	COVER,RADIATOR,LH,P.SILVER	O	O											
14091-0751-458	COVER,RADIATOR,RH,P.SILVER	O	O											
32160-0179-458	FRAME-COMP,P.SILVER	O	O											
33001-0090-458	ARM-COMP-SWING,P.SILVER	O	O											
35004-0081-17M	FENDER-FRONT,SILVER	O	O											
35063-0310-458	STAY,STEP,FR,LH,P.SILVER	O	O											
35063-0401-458	STAY,STEP,FR,RH,P.SILVER	O	O											
35063-0408-11E	STAY,STEP,RR,LH,F.S.BLACK	O	O											
35063-0409-11E	STAY,STEP,RR,RH,F.S.BLACK	O	O											
36001-0096-6Z	COVER-SIDE,LH,F.BLACK	O	O											
36001-0097-6Z	COVER-SIDE,RH,F.BLACK	O	O											
36040-0052-6Z	COVER-TAIL,CNT,F.BLACK	O	O											
36040-0064-17M	COVER-TAIL,FR,LH,SILVER	O	O											
36040-0065-17M	COVER-TAIL,FR,RH,SILVER	O	O											
36040-0069-6Z	COVER-TAIL,RR,LH,F.BLACK	O	O											
36040-0070-6Z	COVER-TAIL,RR,RH,F.BLACK	O	O											
41073-0051-795	WHEEL-ASSY,RR,M.F.P.SILVER	O	O											
41073-0053-795	WHEEL-ASSY,FR,M.F.P.SILVER	O	O											
41080-0104-11I	DISC,FR,BLACK+DISC SILVER	O	O											
43080-5017-DJ	CALIPER-SUB-ASSY,FR,LH,BLACK	O	O											
43080-5028-DJ	CALIPER-SUB-ASSY,FR,RH,BLACK	O	O											
43080-5061-DJ	CALIPER-SUB-ASSY,RR,BLACK	O	O											
44008-0037-KX	PIPE-FORK OUTER,SILVER	O	O											
44013-0064-21	PIPE-FORK INNER,LH,F.BLACK	O	O											
44013-0065-21	PIPE-FORK INNER,RH,F.BLACK	O	O											
44039-0064-458	HOLDER-FORK UPPER,P.SILVER	O	O											
45014-0147-23A	SHOCKABSORBER,SPG,SIL+BODY,BLK	O	O											
46003-0120-10T	HANDLE,F.P.SILVER	O	O											

'07 KLE650A7F

O : Applicable × : Not applicable

Color: Atomic Silver (17M) **(2)**

Part No.	Description	Spec.Code											
		UK	WV										
46012-0029-458	HOLDER-HANDLE,UPP,P.SILVER	O	O										
46012-0030-458	HOLDER-HANDLE,LWR,P.SILVER	O	O										
49107-0081-6Z	COVER-EXHAUST PIPE,LH,F.BLACK	O	O										
49107-0082-6Z	COVER-EXHAUST PIPE,RH,F.BLACK	O	O										
51001-0117-17M	TANK-COMP-FUEL,SILVER	O	O										
53003-0090-MA	LEATHER,SEAT,BLACK	O	O										
53066-0143-MA	SEAT-ASSY,DUAL,BLACK	O	O										
55028-0159-17M	COWLING,UPP,LH,SILVER	O	O										
55028-0160-17M	COWLING,UPP,RH,SILVER	O	O										

'07 KLE650A7F

O : Applicable ×: Not applicable

Color: Candy Burnt Orange (17L) **(1)**

Part No.	Description	Spec.Code												
		UK	WV											
14091-0739-11J	COVER,PIVOT,LH,F.S.BLACK	O	O											
14091-0740-11J	COVER,PIVOT,RH,F.S.BLACK	O	O											
14091-0750-11J	COVER,RADIATOR,LH,F.S.BLACK	O	O											
14091-0751-11J	COVER,RADIATOR,RH,F.S.BLACK	O	O											
32160-0179-11E	FRAME-COMP,F.S.BLACK	O	O											
33001-0090-458	ARM-COMP-SWING,P.SILVER	O	O											
35004-0081-17L	FENDER-FRONT,C.ORANGE	O	O											
35063-0310-458	STAY,STEP,FR,LH,P.SILVER	O	O											
35063-0401-458	STAY,STEP,FR,RH,P.SILVER	O	O											
35063-0408-11E	STAY,STEP,RR,LH,F.S.BLACK	O	O											
35063-0409-11E	STAY,STEP,RR,RH,F.S.BLACK	O	O											
36001-0096-6Z	COVER-SIDE,LH,F.BLACK	O	O											
36001-0097-6Z	COVER-SIDE,RH,F.BLACK	O	O											
36040-0052-6Z	COVER-TAIL,CNT,F.BLACK	O	O											
36040-0064-17L	COVER-TAIL,FR,LH,C.ORANGE	O	O											
36040-0065-17L	COVER-TAIL,FR,RH,C.ORANGE	O	O											
36040-0069-6Z	COVER-TAIL,RR,LH,F.BLACK	O	O											
36040-0070-6Z	COVER-TAIL,RR,RH,F.BLACK	O	O											
41073-0051-795	WHEEL-ASSY,RR,M.F.P.SILVER	O	O											
41073-0053-795	WHEEL-ASSY,FR,M.F.P.SILVER	O	O											
41080-0104-11I	DISC,FR,BLACK+DISC SILVER	O	O											
43080-5017-DJ	CALIPER-SUB-ASSY,FR,LH,BLACK	O	O											
43080-5028-DJ	CALIPER-SUB-ASSY,FR,RH,BLACK	O	O											
43080-5061-DJ	CALIPER-SUB-ASSY,RR,BLACK	O	O											
44008-0037-499	PIPE-FORK OUTER,A.BLACK	O	O											
44013-0064-21	PIPE-FORK INNER,LH,F.BLACK	O	O											
44013-0065-21	PIPE-FORK INNER,RH,F.BLACK	O	O											
44039-0064-458	HOLDER-FORK UPPER,P.SILVER	O	O											
45014-0147-23A	SHOCKABSORBER,SPG,SIL+BODY,BLK	O	O											
46003-0120-10T	HANDLE,F.P.SILVER	O	O											

'07 KLE650A7F

O : Applicable × : Not applicable

Color: Candy Burnt Orange (17L) **(2)**

Part No.	Description	Spec.Code UK	WV
46012-0029-458	HOLDER-HANDLE,UPP,P.SILVER	O	O
46012-0030-458	HOLDER-HANDLE,LWR,P.SILVER	O	O
49107-0081-458	COVER-EXHAUST PIPE,LH,P.SILVER	O	O
49107-0082-458	COVER-EXHAUST PIPE,RH,P.SILVER	O	O
51001-0117-17L	TANK-COMP-FUEL,C.ORANGE	O	O
53003-0090-MA	LEATHER,SEAT,BLACK	O	O
53066-0143-MA	SEAT-ASSY,DUAL,BLACK	O	O
55028-0159-17L	COWLING,UPP,LH,C.ORANGE	O	O
55028-0160-17L	COWLING,UPP,RH,C.ORANGE	O	O

'07 KLE650A7F

O : Applicable ×: Not applicable

Color: Ebony (H8) **(1)**

Part No.	Description	Spec.Code												
		UK	WV											
14091-0739-458	COVER,PIVOT,LH,P.SILVER	O	O											
14091-0740-458	COVER,PIVOT,RH,P.SILVER	O	O											
14091-0750-458	COVER,RADIATOR,LH,P.SILVER	O	O											
14091-0751-458	COVER,RADIATOR,RH,P.SILVER	O	O											
32160-0179-458	FRAME-COMP,P.SILVER	O	O											
33001-0090-458	ARM-COMP-SWING,P.SILVER	O	O											
35004-0081-H8	FENDER-FRONT,EBONY	O	O											
35063-0310-458	STAY,STEP,FR,LH,P.SILVER	O	O											
35063-0401-458	STAY,STEP,FR,RH,P.SILVER	O	O											
35063-0408-11E	STAY,STEP,RR,LH,F.S.BLACK	O	O											
35063-0409-11E	STAY,STEP,RR,RH,F.S.BLACK	O	O											
36001-0096-6Z	COVER-SIDE,LH,F.BLACK	O	O											
36001-0097-6Z	COVER-SIDE,RH,F.BLACK	O	O											
36040-0052-6Z	COVER-TAIL,CNT,F.BLACK	O	O											
36040-0064-H8	COVER-TAIL,FR,LH,EBONY	O	O											
36040-0065-H8	COVER-TAIL,FR,RH,EBONY	O	O											
36040-0069-6Z	COVER-TAIL,RR,LH,F.BLACK	O	O											
36040-0070-6Z	COVER-TAIL,RR,RH,F.BLACK	O	O											
41073-0051-795	WHEEL-ASSY,RR,M.F.P.SILVER	O	O											
41073-0053-795	WHEEL-ASSY,FR,M.F.P.SILVER	O	O											
41080-0104-11I	DISC,FR,BLACK+DISC SILVER	O	O											
43080-5017-DJ	CALIPER-SUB-ASSY,FR,LH,BLACK	O	O											
43080-5028-DJ	CALIPER-SUB-ASSY,FR,RH,BLACK	O	O											
43080-5061-DJ	CALIPER-SUB-ASSY,RR,BLACK	O	O											
44008-0037-KX	PIPE-FORK OUTER,SILVER	O	O											
44013-0064-21	PIPE-FORK INNER,LH,F.BLACK	O	O											
44013-0065-21	PIPE-FORK INNER,RH,F.BLACK	O	O											
44039-0064-458	HOLDER-FORK UPPER,P.SILVER	O	O											
45014-0147-23A	SHOCKABSORBER,SPG,SIL+BODY,BLK	O	O											
46003-0120-10T	HANDLE,F.P.SILVER	O	O											

'07 KLE650A7F

O : Applicable × : Not applicable

Color: Ebony (H8) **(2)**

Part No.	Description	Spec.Code UK	Spec.Code WV
46012-0029-458	HOLDER-HANDLE,UPP,P.SILVER	O	O
46012-0030-458	HOLDER-HANDLE,LWR,P.SILVER	O	O
49107-0081-6Z	COVER-EXHAUST PIPE,LH,F.BLACK	O	O
49107-0082-6Z	COVER-EXHAUST PIPE,RH,F.BLACK	O	O
51001-0117-H8	TANK-COMP-FUEL,EBONY	O	O
53003-0090-MA	LEATHER,SEAT,BLACK	O	O
53066-0143-MA	SEAT-ASSY,DUAL,BLACK	O	O
55028-0159-H8	COWLING,UPP,LH,EBONY	O	O
55028-0160-H8	COWLING,UPP,RH,EBONY	O	O

PICTORIAL INDEX

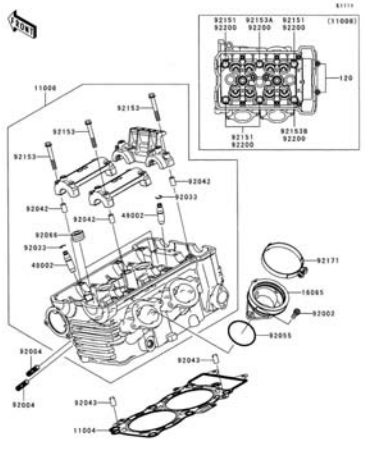

B-3 Cylinder Head	PAGE No. 1

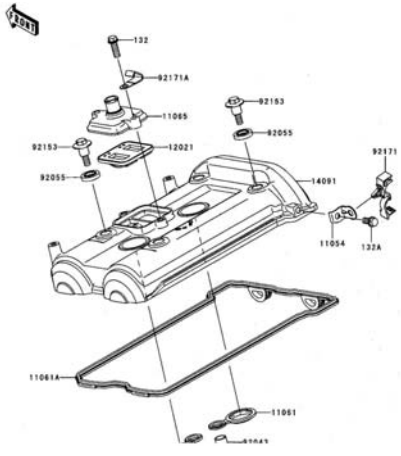

B-4 Cylinder Head Cover	PAGE No. 2

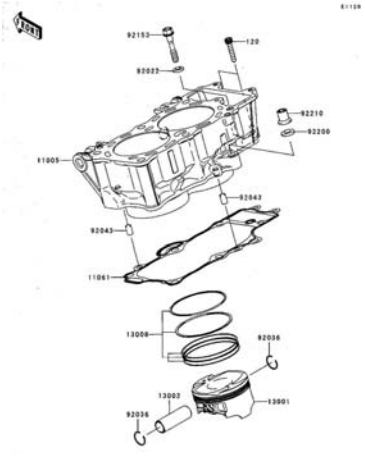

B-5 Cylinder/Piston(s)	PAGE No. 3

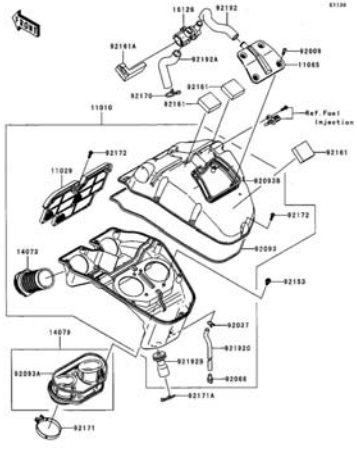

B-6 Air Cleaner	PAGE No. 4

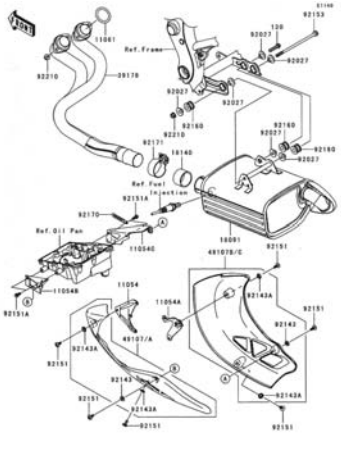

B-7 Muffler(s)	PAGE No. 5

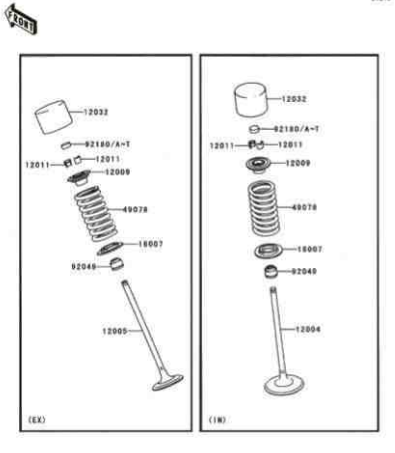

B-8 Valve(s)	PAGE No. 6

PICTORIAL INDEX

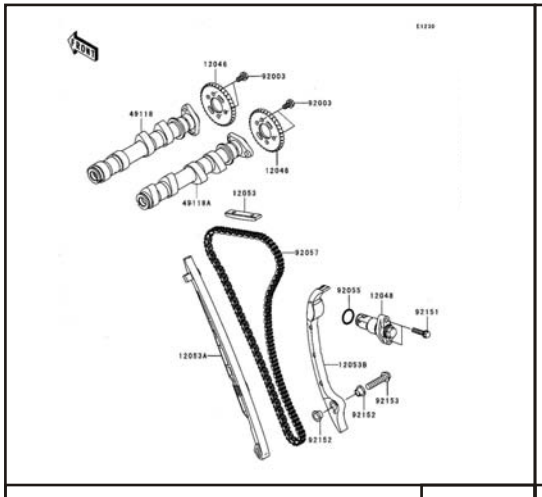

B-9 Camshaft(s)/Tensioner	PAGE No. 7

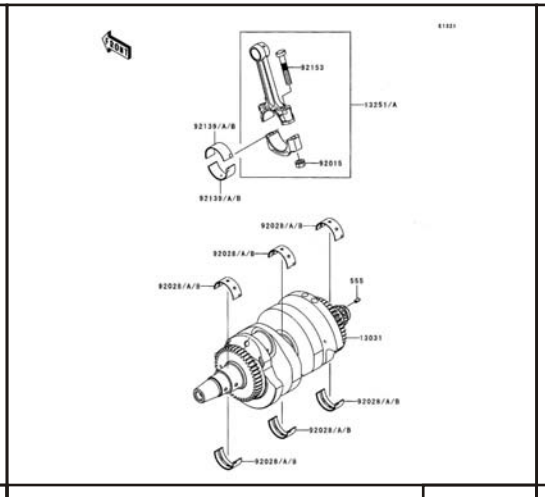

B-10 Crankshaft	PAGE No. 8

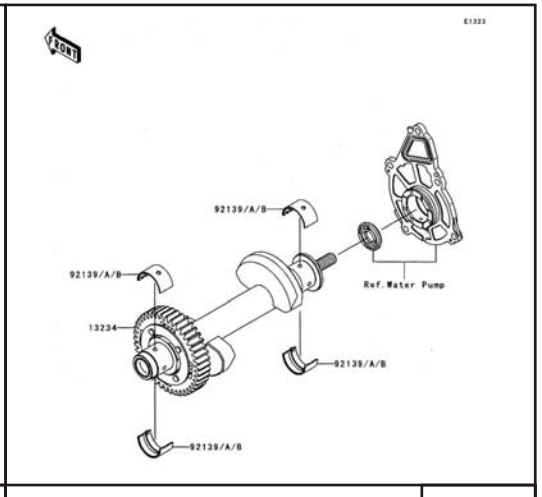

B-11 Balancer	PAGE No. 9

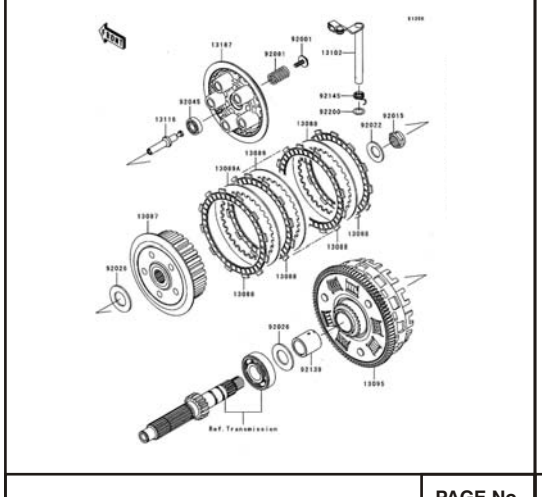

B-12 Clutch	PAGE No. 10

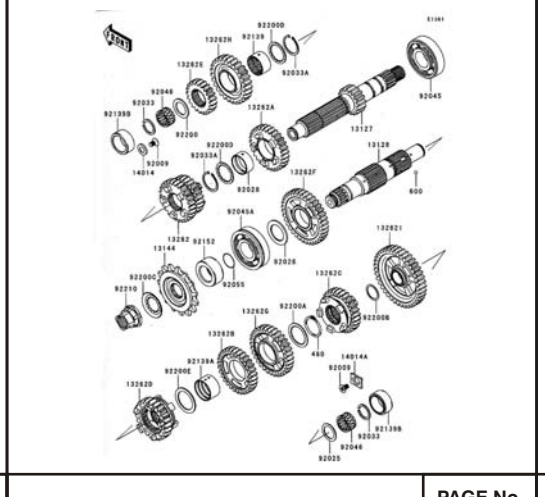

B-13 Transmission	PAGE No. 11

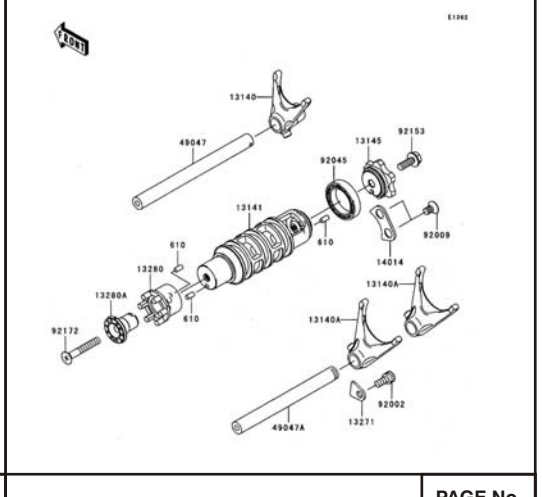

B-14 Gear Change Drum/Shift Fork(s)	PAGE No. 12

PICTORIAL INDEX

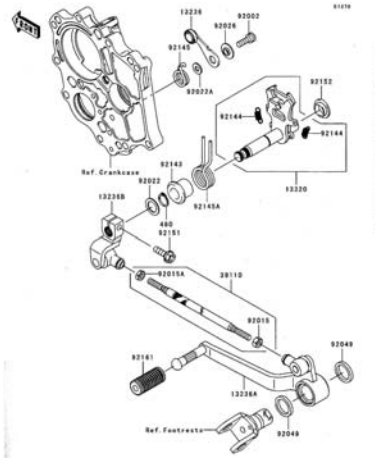

C-3 Gear Change Mechanism	PAGE No. 13

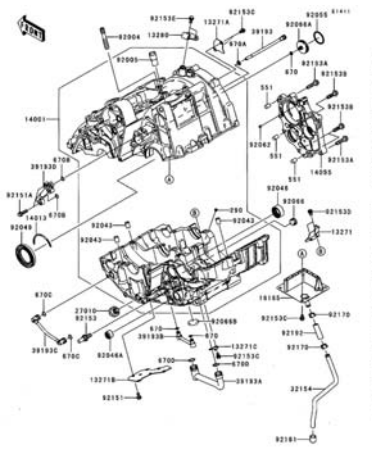

C-4 Crankcase(1/2)	PAGE No. 14

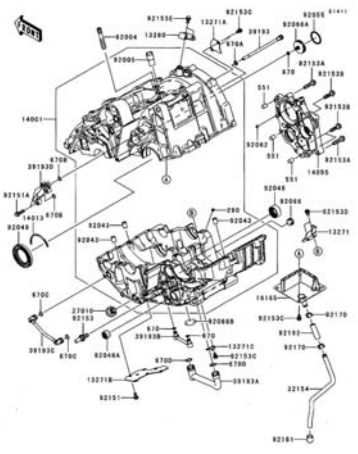

C-5 Crankcase(1/2)	PAGE No. 15

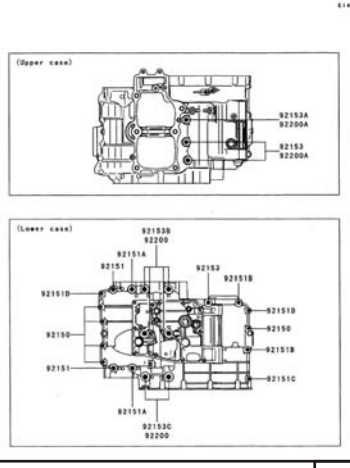

C-6 Crankease Bolt Pattern	PAGE No. 16

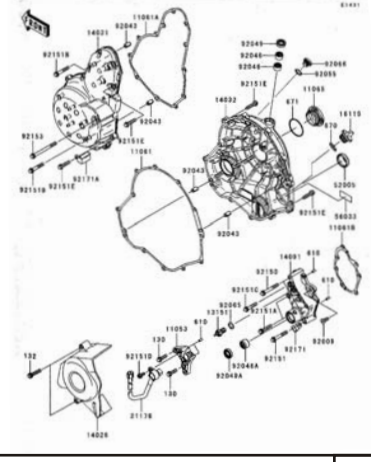

C-7 Engine Cover(s)	PAGE No. 17

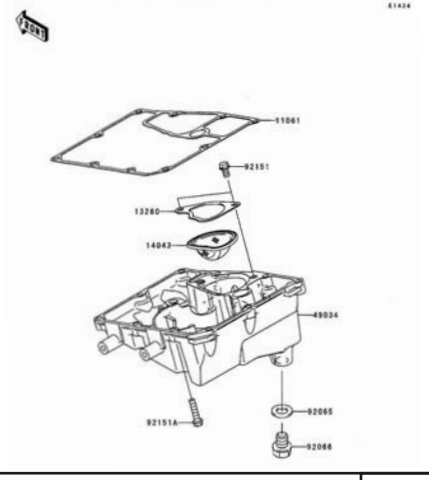

C-8 Oil Pan	PAGE No. 18

PICTORIAL INDEX

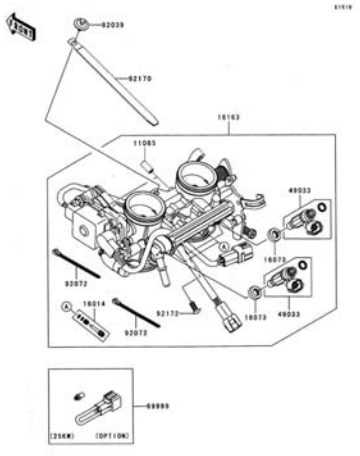

C-9 Throttle	PAGE No. 19

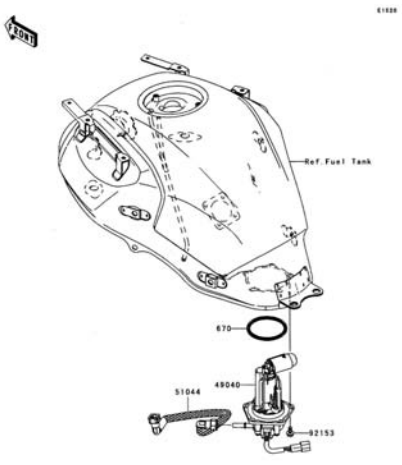

C-10 Fuel Pump	PAGE No. 20

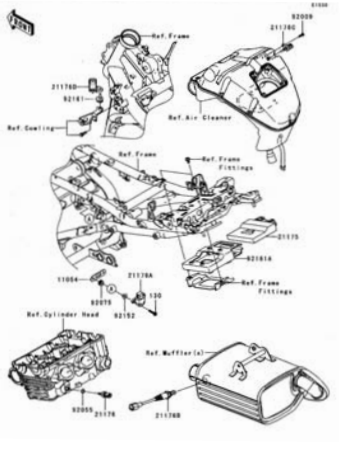

C-11 Fuel Injection	PAGE No. 21

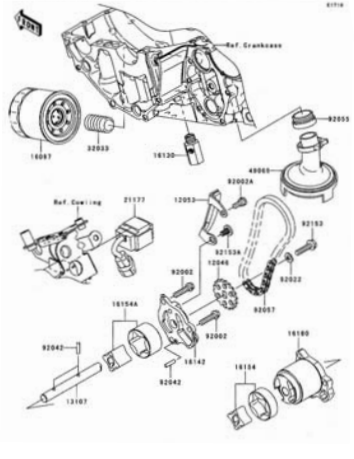

C-12 Oil Pumo	PAGE No. 22

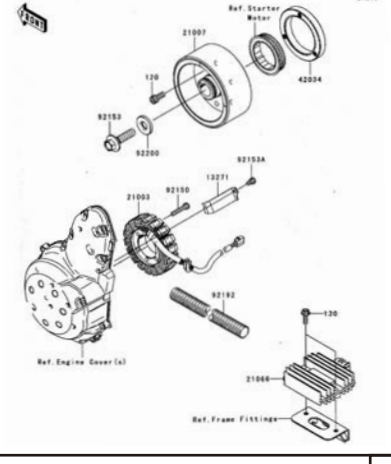

C-13 Generator	PAGE No. 23

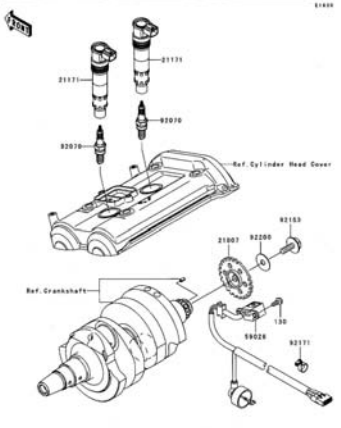

C-14 Ignition System	PAGE No. 24

PICTORIAL INDEX

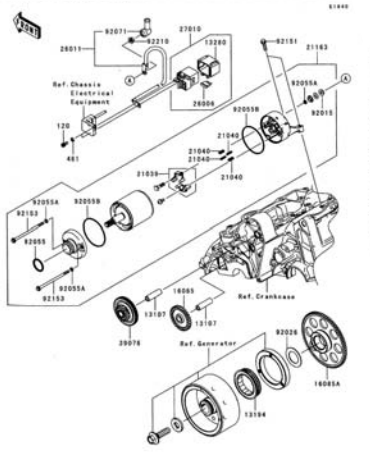

D-3 Starter Motor	PAGE No. 25

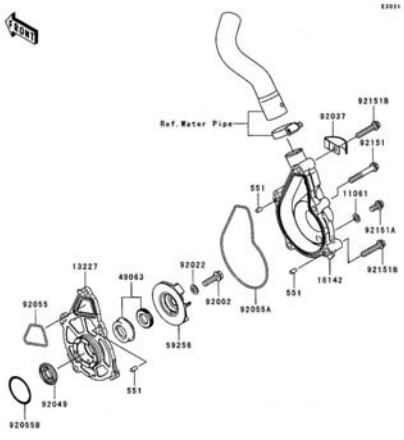

D-4 Water Pump	PAGE No. 26

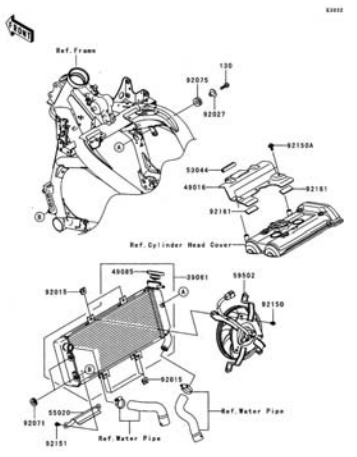

D-5 Radiador	PAGE No. 27

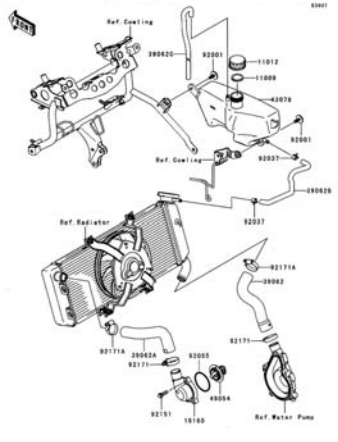

D-6 Water Pipe	PAGE No. 28

PICTORIAL INDEX

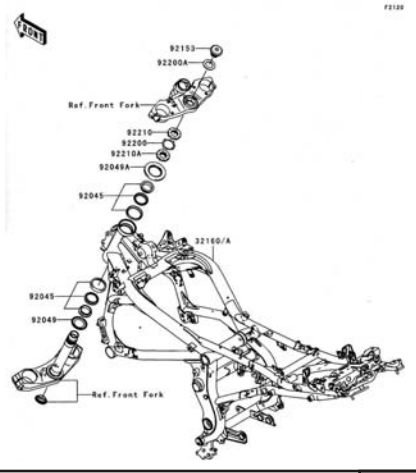

E-3 Frame	PAGE No. 29

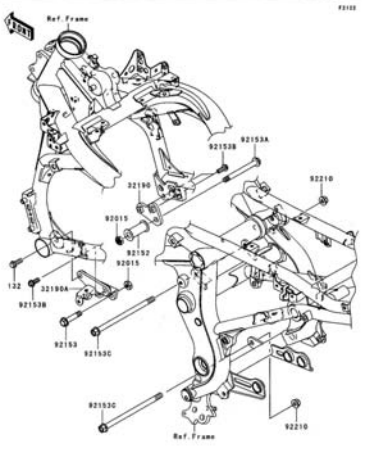

E-4 Engine Mount	PAGE No. 30

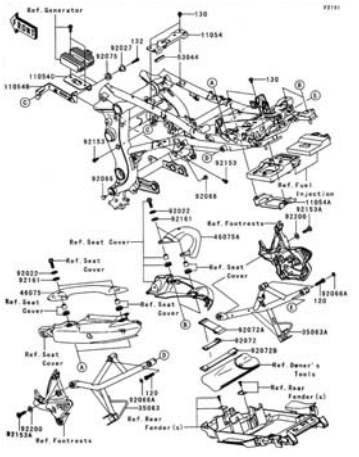

E-5 Frame Fittings	PAGE No. 31

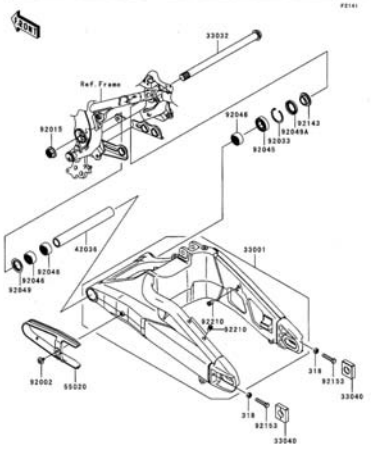

E-6 Swingarm	PAGE No. 32

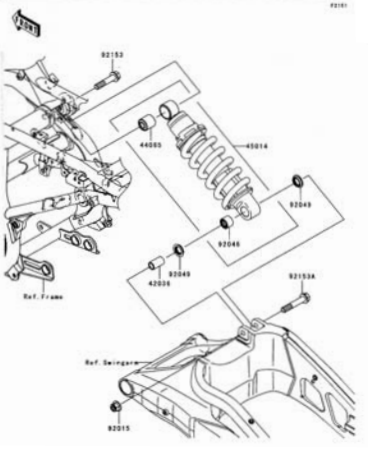

E-7 Suspension/Shock Absorber	PAGE No. 33

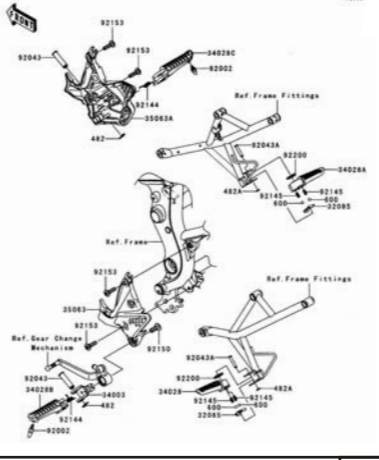

E-8 Footrests	PAGE No. 34

PICTORIAL INDEX

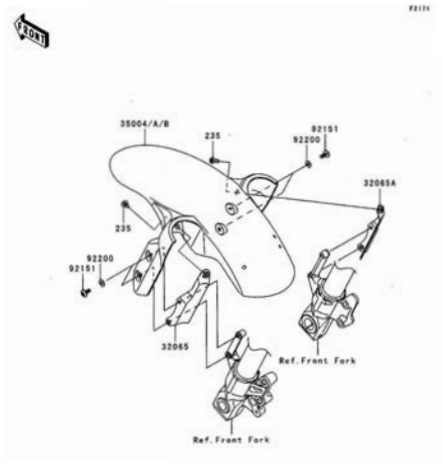

E-9 Front Fender(s)	PAGE No. 35

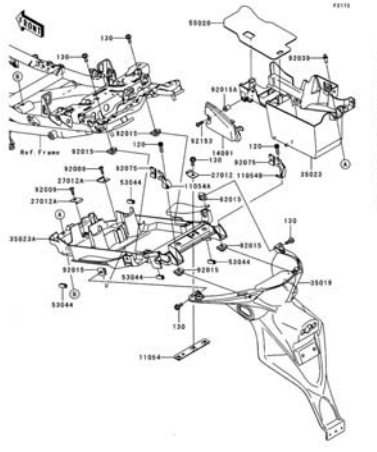

E-10 Rear Fender(s)	PAGE No. 36

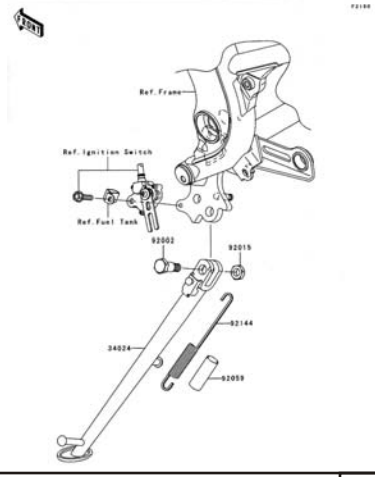

E-11 Stand(s)	PAGE No. 37

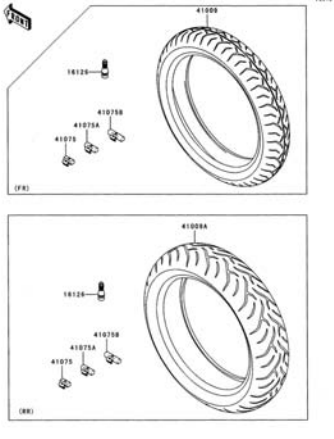

E-12 Tires	PAGE No. 38

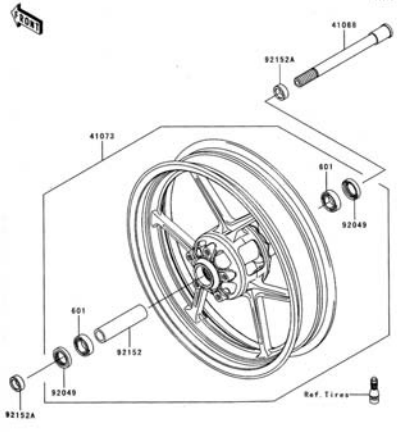

E-13 Front Hub	PAGE No. 39

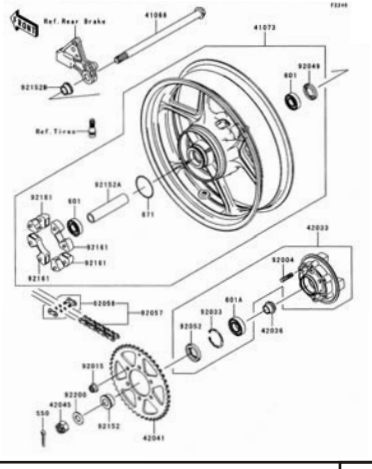

E-14 Rear Hub	PAGE No. 40

PICTORIAL INDEX

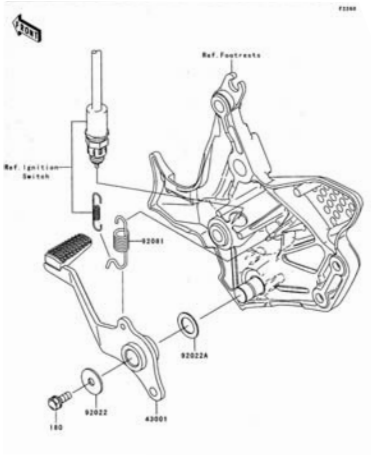

F-3 Brake Pedal	PAGE No. 41

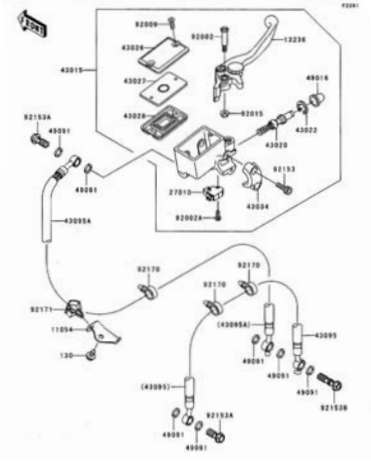

F-4 Front Master Cylinder	PAGE No. 42

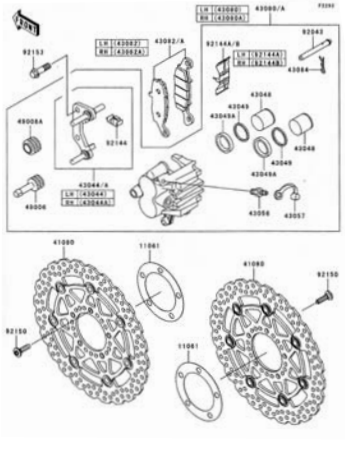

F-5 Front Brake	PAGE No. 43

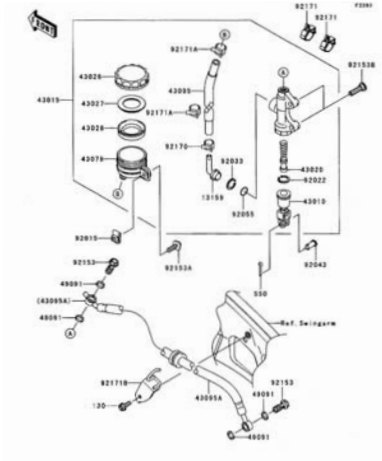

F-6 Rear Master Cylinder	PAGE No. 44

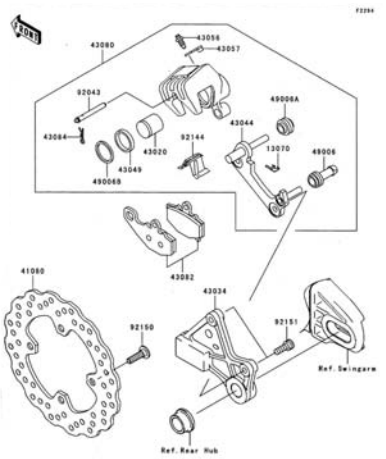

F-7 Rear Brake	PAGE No. 45

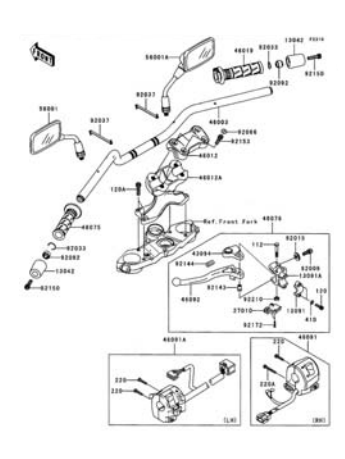

F-8 Handlebar	PAGE No. 46

PICTORIAL INDEX

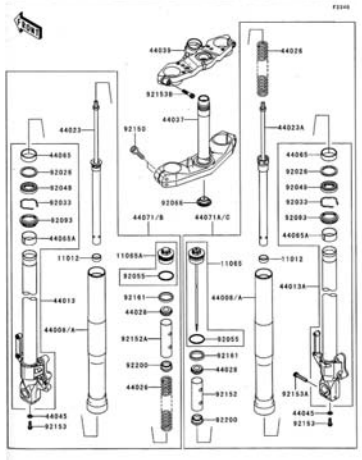

F-9 Front Fork	PAGE No. 47

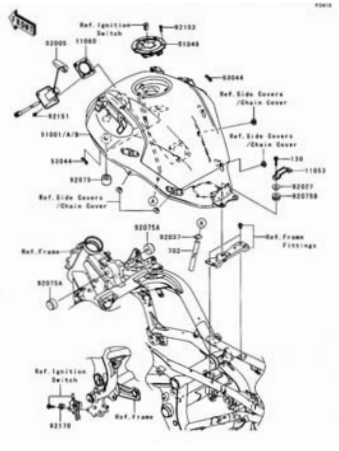

F-10 Fuel Tank	PAGE No. 48

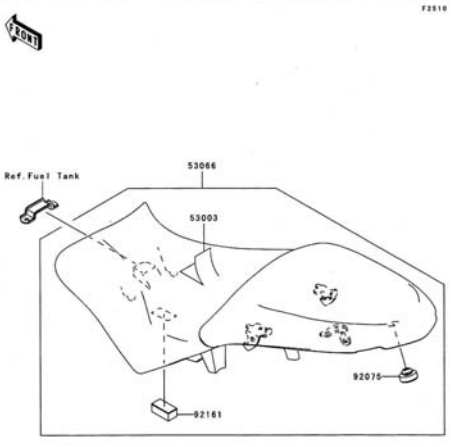

F-11 Seat	PAGE No. 49

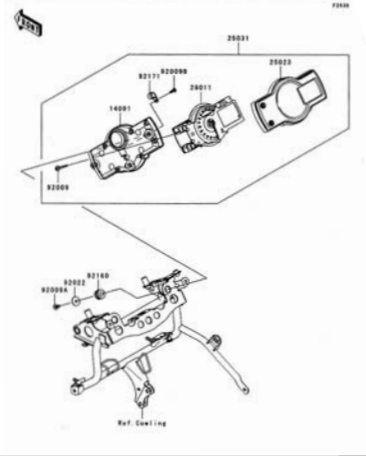

F-12 Meter(s)	PAGE No. 50

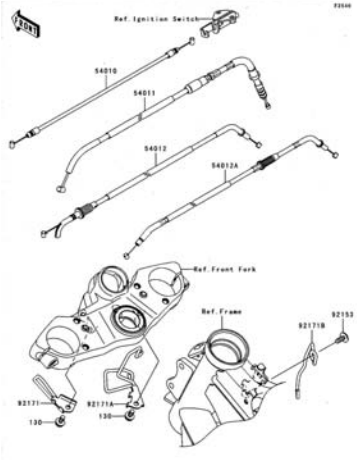

F-13 Cables	PAGE No. 51

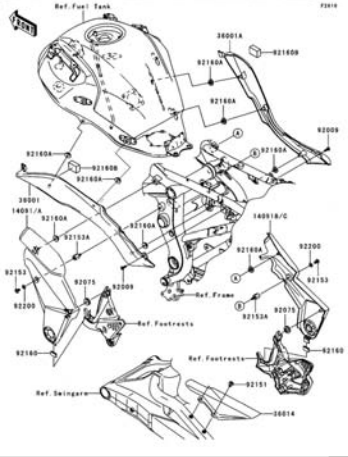

F-14 Side Covers/Chain Cover	PAGE No. 52

PICTORIAL INDEX

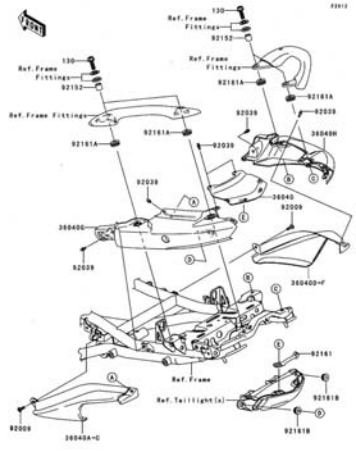

G-3 Seat Cover	PAGE No. 53

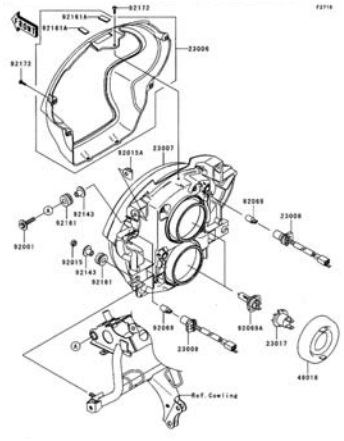

G-4 Headlight(s)	PAGE No. 54

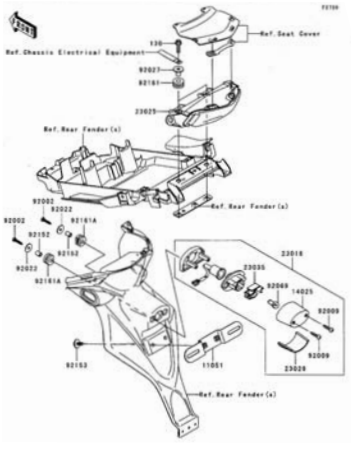

G-5 Taillight(s)	PAGE No. 55

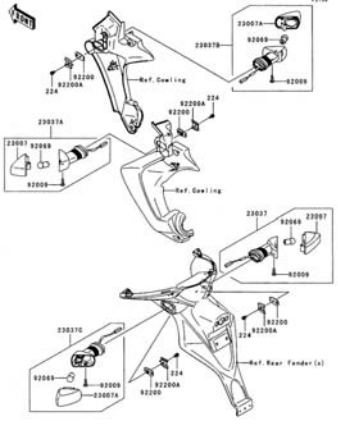

G-6 Turn Signals	PAGE No. 56

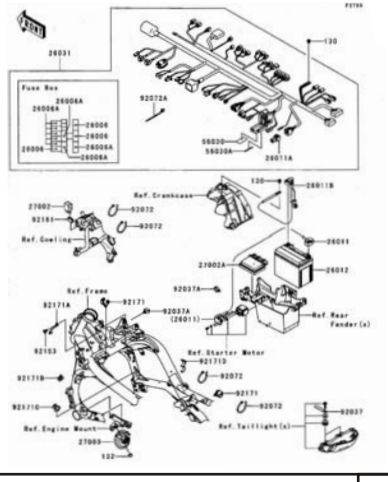

G-7 Chassis Electrical Equipment	PAGE No. 57

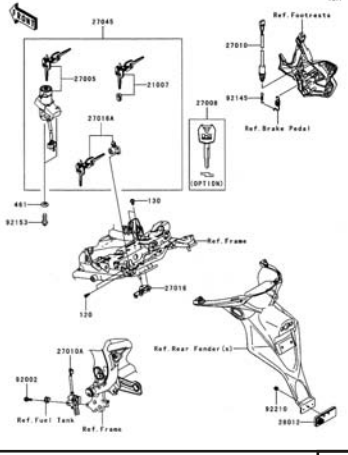

G-8 Ignition Switch	PAGE No. 58

PICTORIAL INDEX

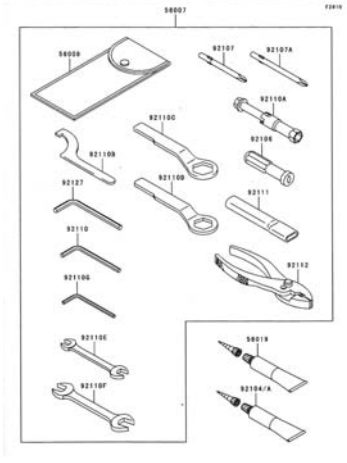

G-9 Owner's Tools	PAGE No. 59

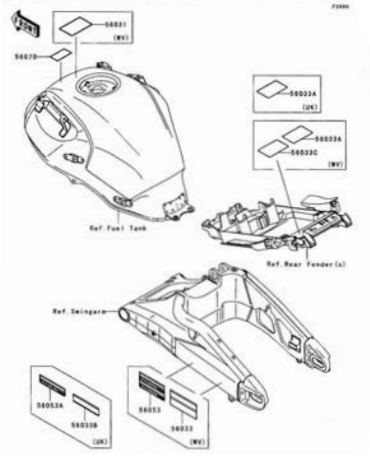

G-10 Labels	PAGE No. 60

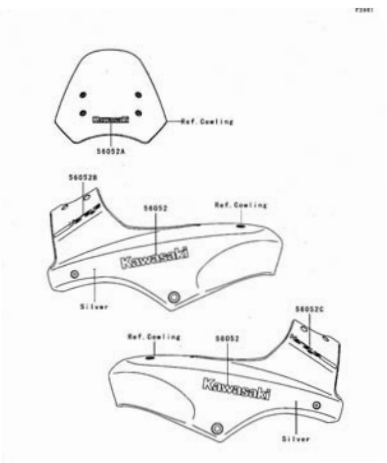

G-11 Decals(Silver)	PAGE No. 61

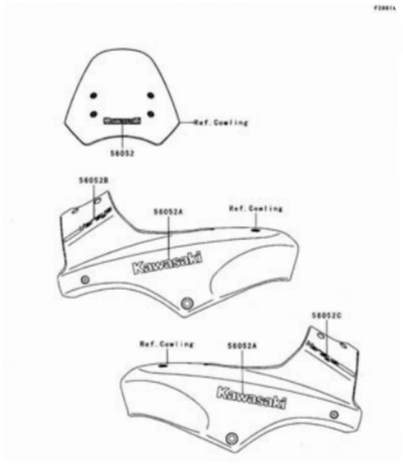

G-12 Decals(Orange)(Ebony)	PAGE No. 62

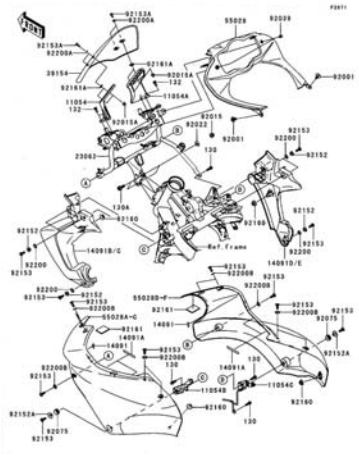

G-13 Cowling	PAGE No. 63

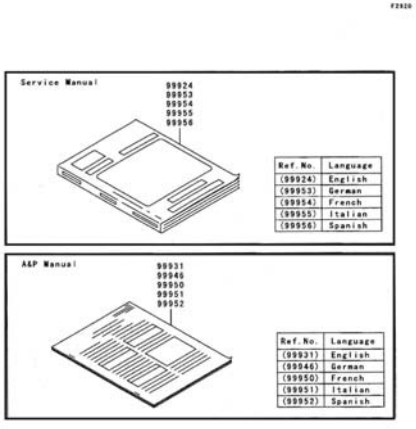

G-14 Manual	PAGE No. 64

This catalog covers:

’07 KLE650 A7F Engine

GRID NO. **B-3**

This grid covers:

Cylinder Head

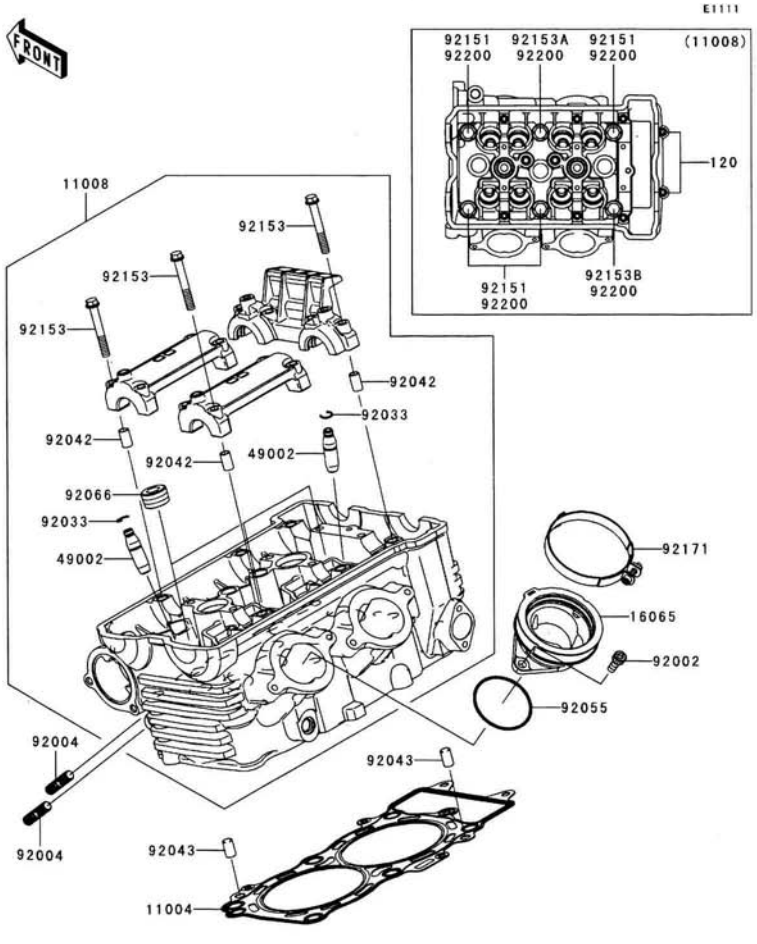

Ref. No.	Part No.	Description	Spec Code	Quantity-KLE650 '07				
				A7F				
11004	11004-0064	GASKET-HEAD		1				
11008	11008-0107	HEAD-COMP-CYLINDER		1				
16065	16065-0024	HOLDER,THROTTLE BODY		2				
49002	49002-1116	GUIDE-VALVE		AR				
92002	92002-1143	BOLT,6X16		4				
92004	92004-1249	STUD,8X22		4				
92033	92033-1247	RING-SNAP		8				
92042	92042-007	PIN,DOWEL,6.3X8X14		6				
92043	92043-1567	PIN,8X14		2				
92055	92055-1600	RING-O,47X1.9		2				
92066	92066-0002	PLUG,PT1/2X12.5		3				
92151	92151-1152	BOLT,10X158		4				
92153	92153-0339	BOLT,6X45		12				
92153A	92153-0972	BOLT,FLANGED-SMALL,10X176		1				
92153B	92153-1321	BOLT,FLANGED-SMALL,10X80		1				
92171	92171-1089	CLAMP		2				
92200	92200-0363	WASHER,10.5X19X2.3		6				
120	120Z0630	BOLT-SOCKET,6X30		2				

This catalog covers:

’07 KLE650 A7F Engine

GRID NO. **B-4**

This grid covers:

Cylinder Head Cover

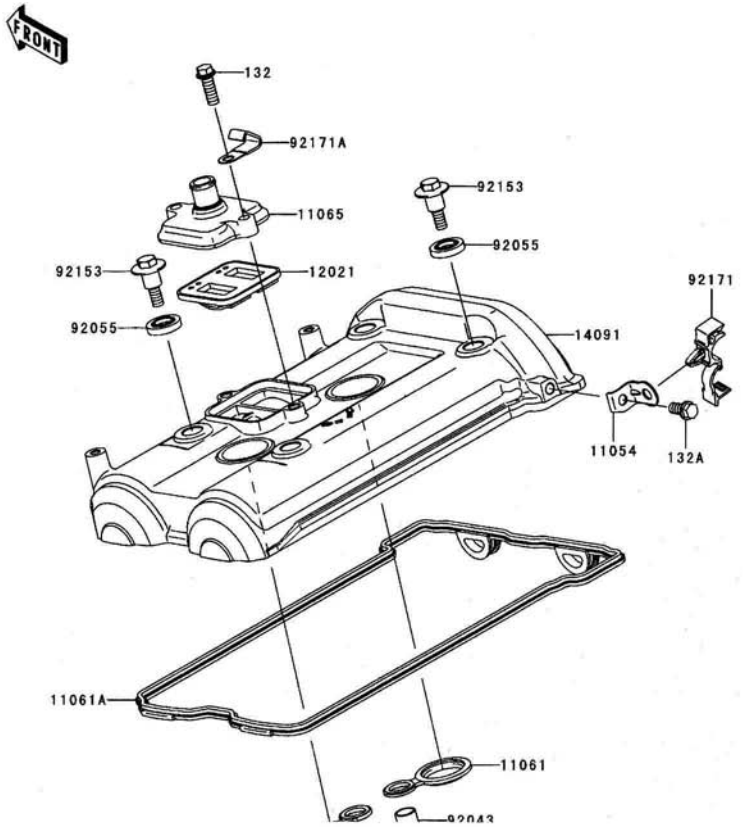

Ref. No.	Part No.	Description	Spec Code	Quantity-KLE650 '07				
				A7F				
11054	11054-0869	BRACKET		1				
11061	11061-0105	GASKET,SPARK PLUG HOLE		2				
11061A	11061-0170	GASKET,HEAD COVER		1				
11065	11065-0208	CAP		1				
12021	12021-1130	VALVE-ASSY-REED		1				
14091	14091-0719	COVER,HEAD		1				
92043	92043-4009	PIN,10.1X12X14		2				
92055	92055-1352	RING-O,HEAD COVER BOLT		4				
92153	92153-0793	BOLT,HEAD COVER		4				
92171	92171-0789	CLAMP,BRAKE HOSE		1				
92171A	92171-0813	CLAMP		1				
132	132G0618	BOLT-FLANGED-SMALL,6X18		2				
132A	132J0612	BOLT-FLANGED-SMALL,6X12		1				

This catalog covers:

’07 KLE650 A7F Engine

GRID NO. **B-5**

This grid covers:

Cylinder/Piston(s)

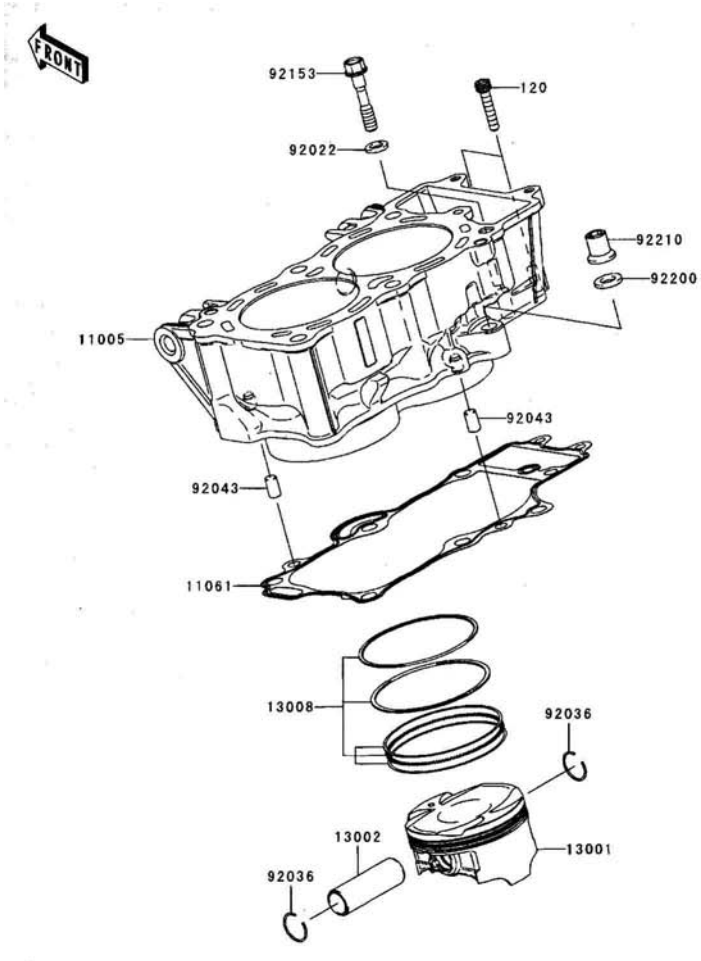

Ref. No.	Part No.	Description	Spec Code	Quantity-KLE650 '07 A7F				
11005	11005-0082	CYLINDER-ENGINE		1				
11061	11061-0171	GASKET,CYLINDER BASE		1				
13001	13001-0087	PISTON-ENGINE		2				
13002	13002-0007	PIN-PISTON		2				
13008	13008-1196	RING-SET-PISTON		2				
92022	92022-1401	WASHER,9X15.5X2		1				
92036	92036-008	RING-SNAP,PISTON PIN		4				
92043	92043-1567	PIN,8X14		2				
92153	92153-1011	BOLT,8X43		1				
92200	92200-0363	WASHER,10.5X19X2.3		1				
92210	92210-0223	NUT		1				
120	120Z0630	BOLT-SOCKET,6X30		2				

This catalog covers:

’07 KLE650 A7F Engine

GRID NO. **B-6**

This grid covers:

Air Cleaner

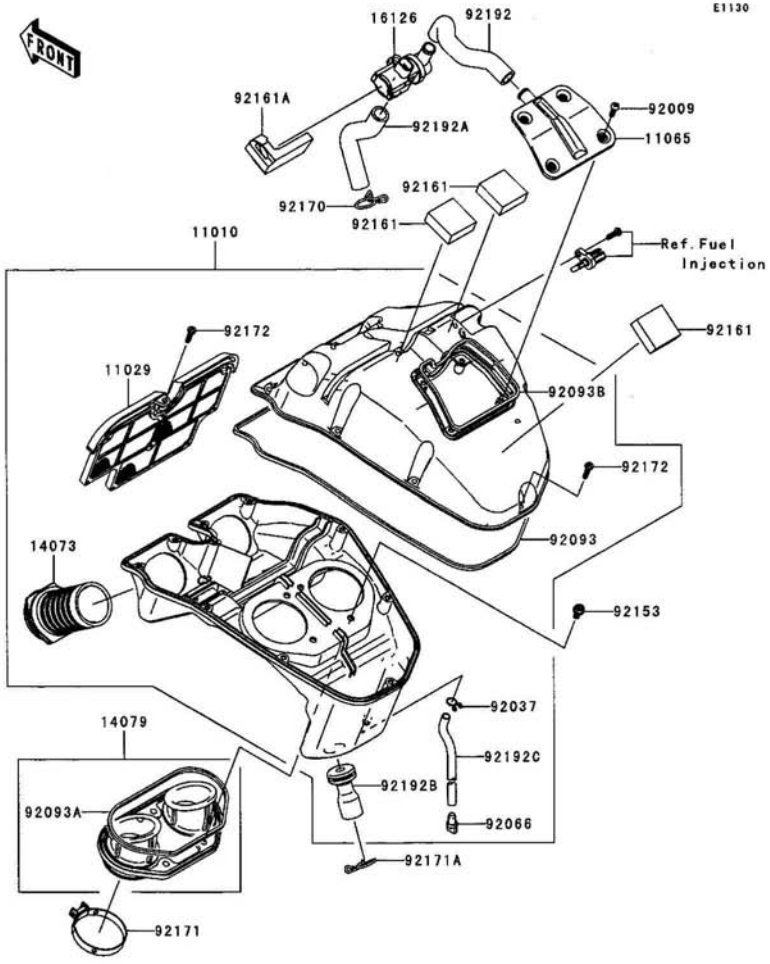

Ref. No.	Part No.	Description	Spec Code	Quantity-KLE650 '07				
				A7F				
11010	11010-0108	FILTER-ASSY-AIR		1				
11029	11029-0008	ELEMENT-ASSY-AIR FILTER		1				
11065	11065-0120	CAP,UPPER CASE		1				
14073	14073-0110	DUCT		2				
14079	14079-0017	HOLDER-ASSY		1				
16126	16126-0019	VALVE,AIR SWITING		1				
92009	92009-1984	SCREW,TAPPING,5X16		4				
92037	92037-147	CLAMP,TUBE		1				
92066	92066-1211	PLUG,DRAIN		1				
92093	92093-0045	SEAL,L=1080		1				
92093A	92093-0046	SEAL		1				
92093B	92093-0048	SEAL,L=368		1				
92153	92153-0759	BOLT,SOCKET,6X12		4				
92161	92161-0302	DAMPER,T=15		3				
92161A	92161-0309	DAMPER		1				
92170	92170-1017	CLAMP		1				
92171	92171-0314	CLAMP		2				
92171A	92171-0435	CLAMP		1				
92172	92172-0009	SCREW,TAPPING,5X20		11				
92192	92192-0231	TUBE,ASV-A/C		1				
92192A	92192-0232	TUBE,HEAD-ASV		1				
92192B	92192-0264	TUBE,BREATHER		1				
92192C	92192-0325	TUBE,DRAIN,6X9X280		1				

This catalog covers:

’07 KLE650 A7F Engine

GRID NO. **B-7**

This grid covers:

Muffler(s)

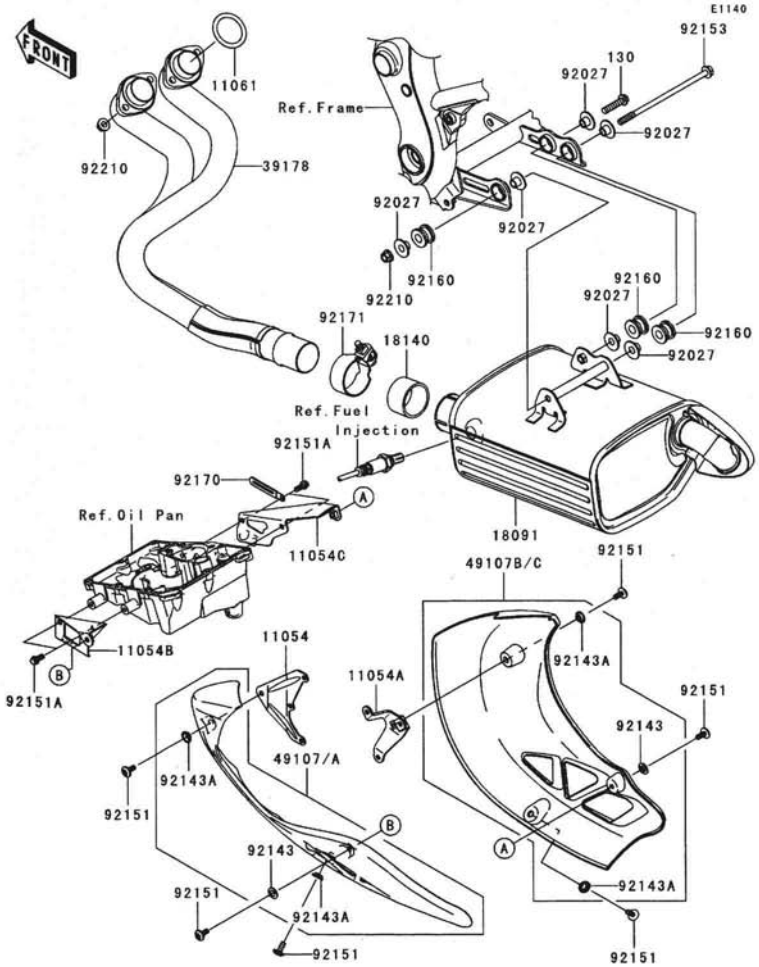

Ref. No.	Part No.	Description	Spec Code	Quantity-KLE650 '07				
				A7F				
11054	11054-0420	BRACKET,EX.COVER,UPP,LH		1				
11054A	11054-0421	BRACKET,EX.COVER,UPP,RH		1				
11054B	11054-0485	BRACKET,EX.COVER,LWR,LH		1				
11054C	11054-0486	BRACKET,EX.COVER,LWR,RH		1				
11061	11061-0278	GASKET,EXHAUST PIPE		2				
18091	18091-0383	BODY-COMP-MUFFLER		1				
18140	18140-0002	GASKET-MUFFLER		1				
39178	39178-0062	MANIFOLD-COMP-EXHAUST		1				
49107	49107-0081-458	COVER-EXHAUST PIPE,LH,P.SILVER		1				
49107A	49107-0081-6Z	COVER-EXHAUST PIPE,LH,F.BLACK		1				
49107B	49107-0082-458	COVER-EXHAUST PIPE,RH,P.SILVER		1				
49107C	49107-0082-6Z	COVER-EXHAUST PIPE,RH,F.BLACK		1				
92027	92027-1653	COLLAR,FLANGED,8.8X10.6		6				
92143	92143-1087	COLLAR		2				
92143A	92143-1196	COLLAR		4				
92151	92151-1654	BOLT,SOCKET,6X14		6				
92151A	92151-1755	BOLT,FLANGED,6X14		4				
92153	92153-1357	BOLT,FLANGED,8X165		1				
92160	92160-1116	DAMPER		3				
92170	92170-1514	CLAMP		1				
92171	92171-1568	CLAMP		1				
92210	92210-1114	NUT,8MM		5				
130	130Z0835	BOLT-FLANGED,8X35		1				

This catalog covers:

'07 KLE650 A7F Engine

GRID NO. **B-8**

This grid covers:

Valve(s)

E1210

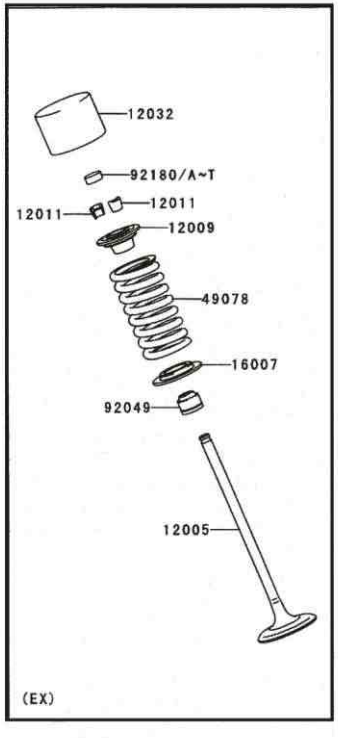

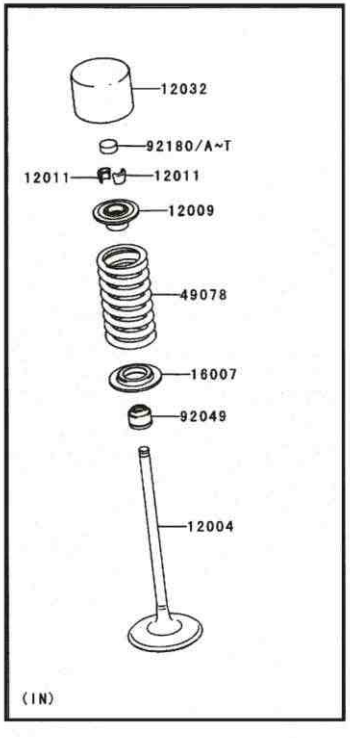

Ref. No.	Part No.	Description	Spec Code	Quantity-KLE650 '07 A7F				
12004	12004-0015	VALVE-INTAKE		4				
12005	12005-0035	VALVE-EXHAUST		4				
12009	12009-1091	RETAINER-VALVE SPRING		8				
12011	12011-1053	COLLET		16				
12032	12032-0009	TAPPET		8				
16007	16007-1228	SEAT-SPRING		8				
49078	49078-0038	SPRING-ENGINE VALVE		8				
92049	92049-1349	SEAL-OIL,VSB 4.3 7.5 5.3 8.3		8				
92180	92180-1014	SHIM,T=2.50		AR				
92180A	92180-1016	SHIM,T=2.55		AR				
92180B	92180-1018	SHIM,T=2.60		AR				
92180C	92180-1020	SHIM,T=2.65		AR				
92180D	92180-1022	SHIM,T=2.70		AR				
92180E	92180-1024	SHIM,T=2.75		AR				
92180F	92180-1026	SHIM,T=2.80		AR				
92180G	92180-1028	SHIM,T=2.85		AR				
92180H	92180-1030	SHIM,T=2.90		AR				
92180I	92180-1032	SHIM,T=2.95		AR				
92180J	92180-1034	SHIM,T=3.00		8				
92180K	92180-1036	SHIM,T=3.05		AR				
92180L	92180-1038	SHIM,T=3.10		AR				
92180M	92180-1040	SHIM,T=3.15		AR				
92180N	92180-1042	SHIM,T=3.20		AR				
92180O	92180-1044	SHIM,T=3.25		AR				
92180P	92180-1046	SHIM,T=3.30		AR				
92180Q	92180-1048	SHIM,T=3.35		AR				
92180R	92180-1050	SHIM,T=3.40		AR				
92180S	92180-1052	SHIM,T=3.45		AR				
92180T	92180-1054	SHIM,T=3.50		AR				

This catalog covers:

’07 KLE650 A7F Engine

GRID NO. **B-9**

This grid covers:

Camshaft(s)/Tensioner

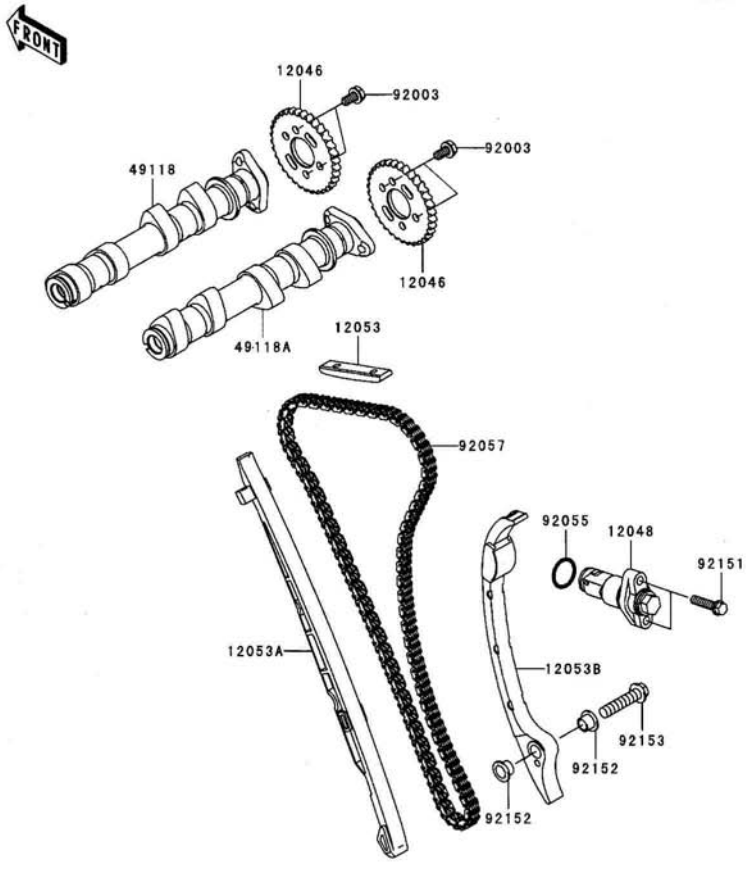

Ref. No.	Part No.	Description	Spec Code	Quantity-KLE650 '07 A7F				
12046	12046-0041	SPROCKET,CAM,24T		2				
12048	12048-0044	TENSIONER-ASSY		1				
12053	12053-0051	GUIDE-CHAIN,UPP		1				
12053A	12053-0059	GUIDE-CHAIN,FR		1				
12053B	12053-0075	GUIDE-CHAIN,RR		1				
49118	49118-0075	CAMSHAFT-COMP,EX		1				
49118A	49118-0076	CAMSHAFT-COMP,IN		1				
92003	92003-208	BOLT,FLANGED,6X11		4				
92055	92055-086	RING-O,18.8X1.9		1				
92057	92057-0100	CHAIN,CAM,92RH 2015-134M		1				
92151	92151-1930	BOLT,FLANGED-SMALL,6X25		2				
92152	92152-0306	COLLAR,8.2X10.6X6.9		2				
92153	92153-1394	BOLT,FLANGED-SMALL,8X35		1				

This catalog covers:

’07 KLE650 A7F Engine

GRID NO. **B-10**

This grid covers:

Crankshaft

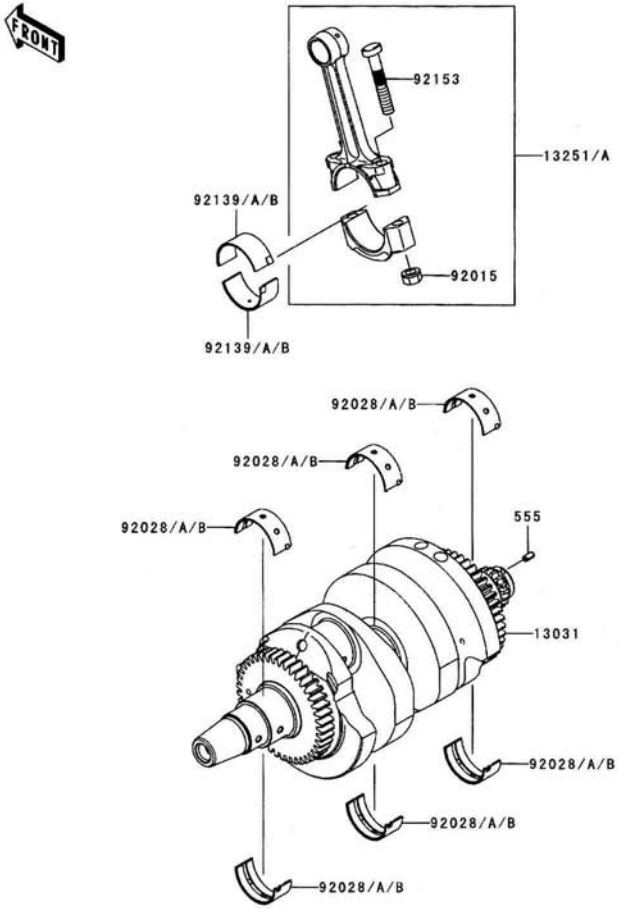

Ref. No.	Part No.	Description	Spec Code	Quantity-KLE650 '07 A7F				
13031	13031-0071	CRANKSHAFT-COMP		1				
13251	13251-0010-JJ	ROD-ASSY-CONNECTING,J		AR				
13251A	13251-0010-KK	ROD-ASSY-CONNECTING,K		2				
92015	92015-1311	NUT,FLANGED,8MM		4				
92028	92028-1903	BUSHING,CRANKSHAFT,BLUE		6				
92028A	92028-1904	BUSHING,CRANKSHAFT,BLACK		AR				
92028B	92028-1905	BUSHING,CRANKSHAFT,BROWN		AR				
92139	92139-0114	BUSHING,CON-ROD,BLUE		4				
92139A	92139-0115	BUSHING,CON-ROD,BLACK		AR				
92139B	92139-0116	BUSHING,CON-ROD,BROWN		AR				
92153	92153-0957	BOLT,CON-ROD,8X49		4				
555	555A0408	PIN-SPRING,4X8		1				

This catalog covers:

’07 KLE650 A7F Engine

GRID NO. **B-11**

This grid covers:

Balancer

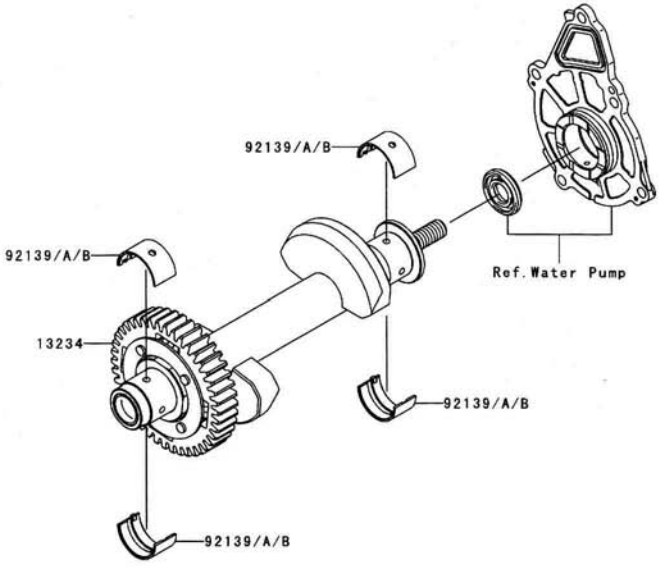

Ref. No.	Part No.	Description	Spec Code	Quantity-KLE650 '07 A7F				
13234	13234-0024	SHAFT-COMP,BALANCER		1				
92139	92139-0117	BUSHING,BALANCER,BLUE		4				
92139A	92139-0118	BUSHING,BALANCER,BLACK		AR				
92139B	92139-0119	BUSHING,BALANCER,BROWN		AR				

This catalog covers:

’07 KLE650 A7F Engine

GRID NO. **B-12**

This grid covers:

Clutch

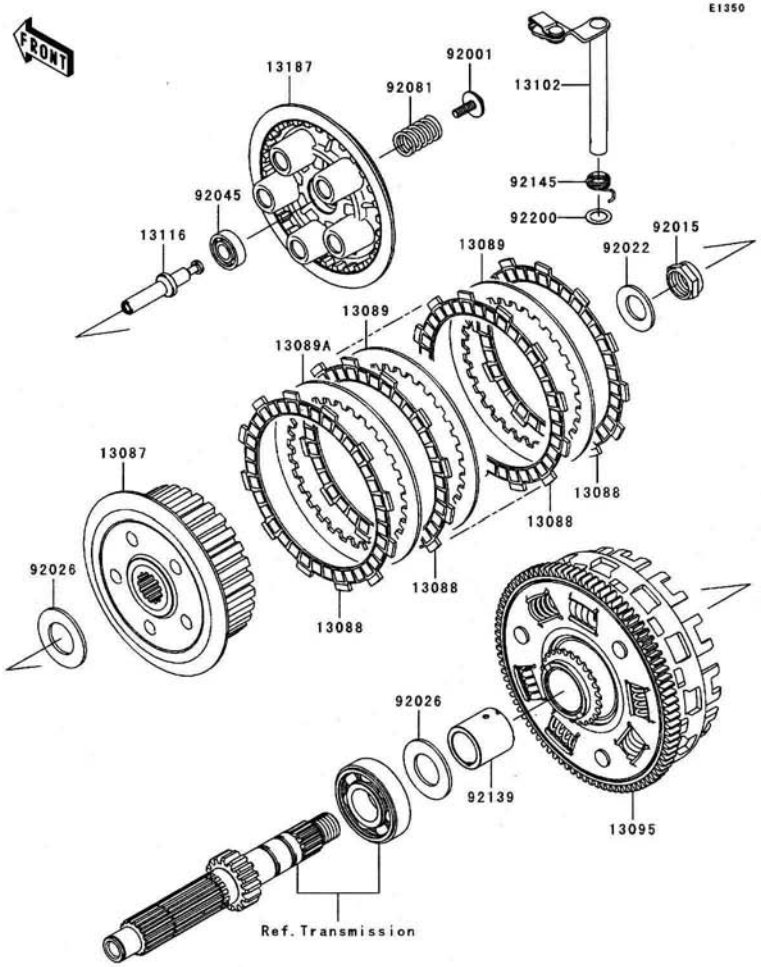

Ref. No.	Part No.	Description	Spec Code	Quantity-KLE650 '07				
				A7F				
13087	13087-042	HUB-CLUTCH		1				
13088	13088-1105	PLATE-FRICTION		7				
13089	13089-0016	PLATE-CLUTCH,T=2.3		5				
13089A	13089-0017	PLATE-CLUTCH,T=2.6		1				
13095	13095-0066	HOUSING-COMP-CLUTCH		1				
13102	13102-0029	RELEASE-COMP-CLUTCH		1				
13116	13116-0018	ROD-PUSH		1				
13187	13187-1006	PLATE-CLUTCH OPERATING		1				
92001	92001-1066	BOLT,FLANGED,6X18		5				
92015	92015-1555	NUT,20MM		1				
92022	92022-1868	WASHER,20.3X36X3.7		1				
92026	92026-022	SPACER,25.5X47X2.5		2				
92045	92045-1235	BEARING-BALL,6001C3ML01		1				
92081	92081-1033	SPRING,CLUTCH		5				
92139	92139-0106	BUSHING		1				
92145	92145-0066	SPRING,CLUTCH RELEASE		1				
92200	92200-1487	WASHER,12X18.5X0.5		1				

This catalog covers:

'07 KLE650 A7F Engine

GRID NO. **B-13**

This grid covers:

Transmission

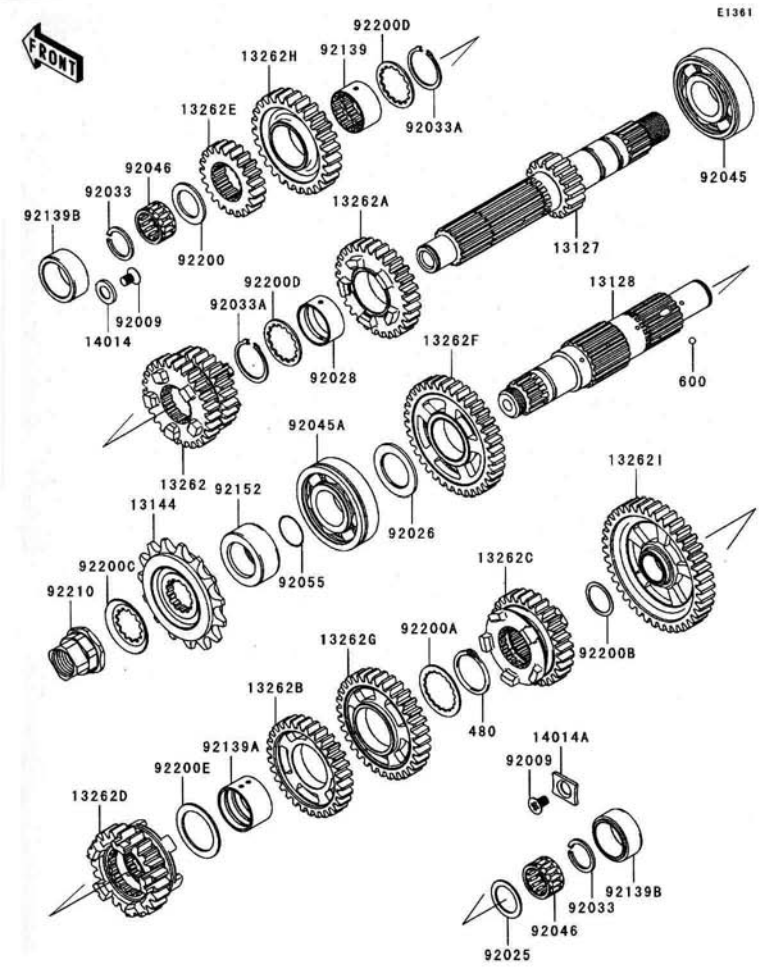

Ref. No.	Part No.	Description	Spec Code	Quantity-KLE650 '07 A7F				
13127	13127-0028	SHAFT-TRANSMISSION INPUT,16T		1				
13128	13128-0020	SHAFT-TRANSMISSION OUTPUT		1				
13144	13144-0024	SPROCKET-OUTPUT,15T,#520		1				
13262	13262-0245	GEAR,INPUT 3RD&4TH,24T&27T		1				
13262A	13262-0246	GEAR,INPUT 5TH,29T		1				
13262B	13262-0251	GEAR,OUTPUT 4TH,30T		1				
13262C	13262-0252	GEAR,OUTPUT 5TH,28T		1				
13262D	13262-0253	GEAR,OUTPUT TOP,23T		1				
13262E	13262-0335	GEAR,INPUT 2ND,21T		1				
13262F	13262-0337	GEAR,OUTPUT 2ND,36T		1				
13262G	13262-0338	GEAR,OUTPUT 3RD,32T		1				
13262H	13262-0447	GEAR,INPUT TOP,27T		1				
13262I	13262-0498	GEAR,OUTPUT LOW,39T		1				
14014	14014-0019	PLATE-POSITION,9.5X17X2.3		1				
14014A	14014-0020	PLATE-POSITION,RH		1				
92009	92009-1375	SCREW,6X10		2				
92025	92025-1455	SHIM,20.3X28X1.1		1				
92026	92026-1529	SPACER,25.3X39X2.0		1				
92028	92028-1449	BUSHING,INPUT GEAR		1				
92033	92033-015	RING-SNAP,20MM		2				
92033A	92033-1037	RING-SNAP,25.9X30.6X1.2		2				
92045	92045-0042	BEARING-BALL,25X62X17		1				
92045A	92045-1224	BEARING-BALL,6305N2SH2		1				
92046	92046-1185	BEARING-NEEDLE,KMJ20X26X13.8X1		2				
92055	92055-1293	RING-O,21.5X1.5		1				
92139	92139-0107	BUSHING,INPUT TOP GEAR		1				
92139A	92139-0108	BUSHING,OUT 3RD&4TH GEAR		1				
92139B	92139-0120	BUSHING,BEARING-NEEDLE		2				
92152	92152-0300	COLLAR,25X40X17.2		1				
92200	92200-0221	WASHER,20.2X30X1.8		1				
92200A	92200-0222	WASHER,30.3X38X1.0		1				
92200B	92200-0291	WASHER,20.2X25.0X0.5		1				
92200C	92200-1065	WASHER		1				
92200D	92200-1240	WASHER,28.5X34.0X1.5		2				
92200E	92200-1278	WASHER,29.9X40X1.5		1				
92210	92210-0222	NUT,M20,L=24MM		1				
480	480J2900	CIRCLIP		1				
600	600A0500	BALL-STEEL,5/32"		3				

This catalog covers:

'07 KLE650 A7F Engine

GRID NO. **B-14**

This grid covers:

Gear Change Drum/Shift Fork(s)

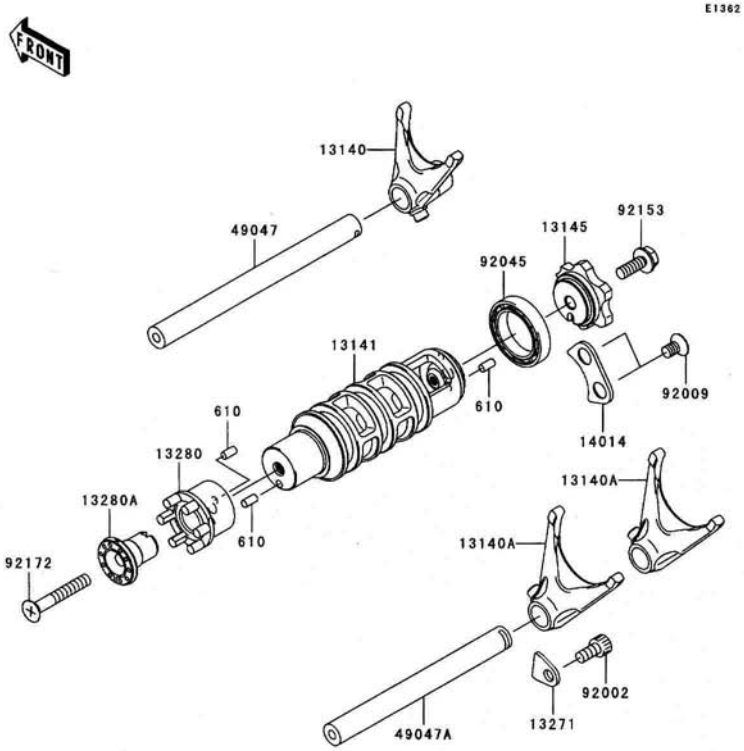

Ref. No.	Part No.	Description	Spec Code	Quantity-KLE650 '07				
				A7F				
13140	13140-0025	FORK-SHIFT,INPUT		1				
13140A	13140-0026	FORK-SHIFT,OUTPUT		2				
13141	13141-0018	DRUM-CHANGE		1				
13145	13145-0020	CAM-CHANGE DRUM		1				
13271	13271-0626	PLATE		1				
13280	13280-0183	HOLDER,NEUTRAL SWITCH		1				
13280A	13280-0192	HOLDER		1				
14014	14014-0018	PLATE-POSITION		1				
49047	49047-0019	ROD-SHIFT,INPUT		1				
49047A	49047-0020	ROD-SHIFT,OUTPUT		1				
92002	92002-1796	BOLT,SOCKET,6X12		1				
92009	92009-1375	SCREW,6X10		2				
92045	92045-1122	BEARING-BALL,6805		1				
92153	92153-0958	BOLT,FLANGED,6X18		1				
92172	92172-0209	SCREW-CSK-CROS,6X40		1				
610	610A0408	ROLLER,4X8		3				

This catalog covers:

’07 KLE650 A7F Engine

GRID NO. **C-3**

This grid covers:

Gear Change Mechanism

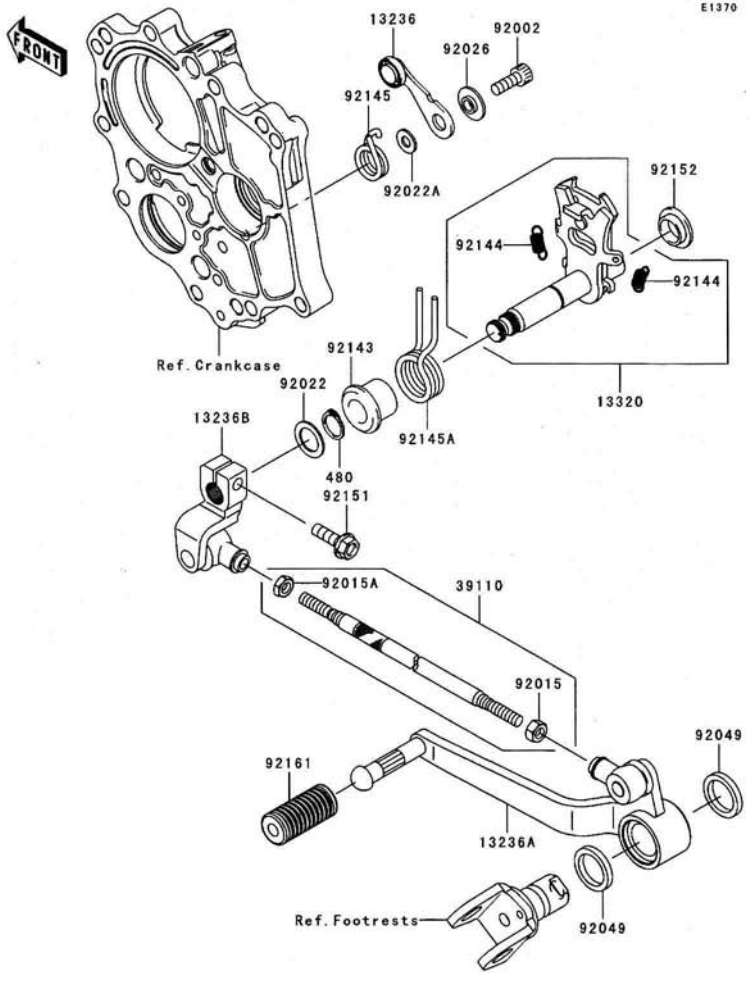

Ref. No.	Part No.	Description	Spec Code	Quantity-KLE650 '07 A7F				
13236	13236-0094	LEVER-COMP,POSITION		1				
13236A	13236-0136	LEVER-COMP,PEDAL		1				
13236B	13236-0137	LEVER-COMP		1				
13320	13320-0010	LEVER-ASSY		1				
39110	39110-1124	ROD-ASSY-TIE		1				
92002	92002-1778	BOLT,SOCKET,6X16		1				
92015	92015-1443	NUT,6MM		1				
92015A	92015-1444	NUT,LEFT HANDED,6MM		1				
92022	92022-1496	WASHER,13.3X20X1		1				
92022A	92022-1827	WASHER,6X12.8X1.2		1				
92026	92026-1217	SPACER		1				
92049	92049-0092	SEAL-OIL		2				
92143	92143-1498	COLLAR,RETURN SPRING		1				
92144	92144-1975	SPRING,CHANGE LEVER		2				
92145	92145-0304	SPRING,POSITION		1				
92145A	92145-0326	SPRING,RETURN		1				
92151	92151-1226	BOLT,FLANGED,6X20		1				
92152	92152-1075	COLLAR		1				
92161	92161-1300	DAMPER,CHANGE PEDAL		1				
480	480J1300	CIRCLIP-TYPE-C,13MM		1				

This catalog covers:

’07 KLE650 A7F Engine

GRID NO. **C-4**

This grid covers:

Crankcase(1/2)

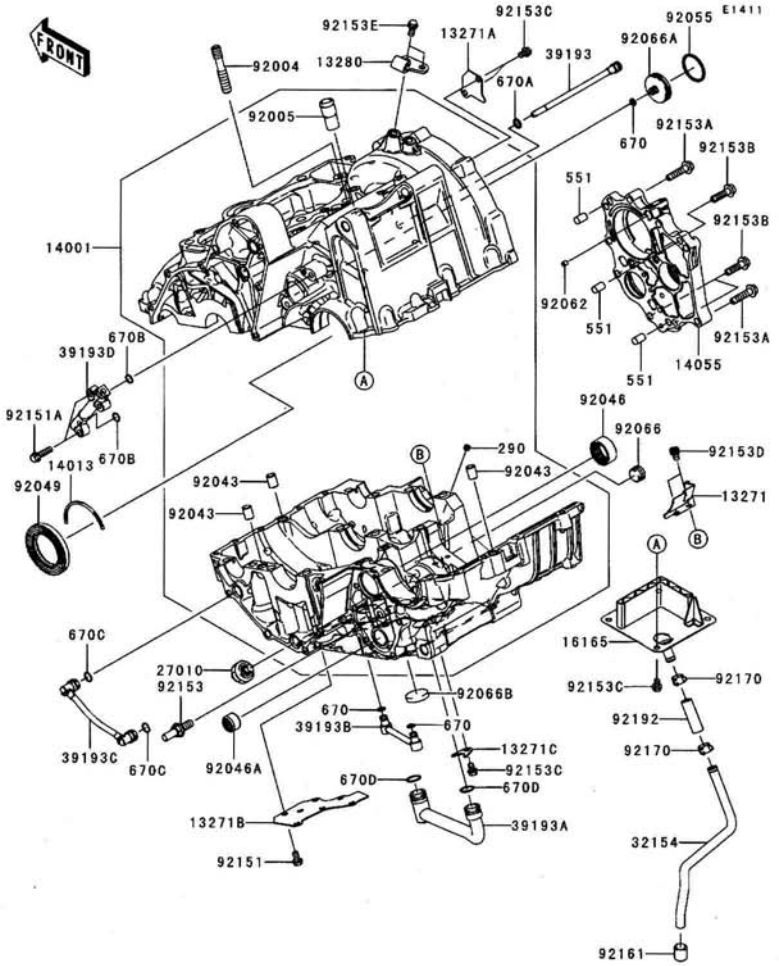

Ref. No.	Part No.	Description	Spec Code	Quantity-KLE650 '07	A7F
13271	13271-0575	PLATE,OIL SHIELDING		1	
13271A	13271-0577	PLATE		1	
13271B	13271-0584	PLATE		1	
13271C	13271-1187	PLATE,OIL PIPE		1	
13280	13280-0224	HOLDER,CLUTCH CABLE		1	
14001	14001-0102	SET-CRANKCASE		1	
14013	14013-1004	RING-POSITION,T=1.98		1	
14055	14055-0018	CASE-GEAR		1	
16165	16165-0001	SEPARATOR,BREATHER		1	
27010	27010-1313	SWITCH,OIL PRESSURE		1	
32154	32154-0661	PIPE,BREATHER		1	
39193	39193-0029	PIPE-OIL		1	
39193A	39193-0031	PIPE-OIL		1	
39193B	39193-0032	PIPE-OIL		1	
39193C	39193-0033	PIPE-OIL		1	
39193D	39193-0044	PIPE-OIL		1	
92004	92004-0024	STUD,10X34.5		1	
92005	92005-1238	FITTING,BREATHER		1	
92043	92043-1037	PIN,DOWEL,10X14		3	
92046	92046-0017	BEARING-NEEDLE,24BTM3013		1	
92046A	92046-1148	BEARING-NEEDLE,HK1312		1	
92049	92049-1501	SEAL-OIL,HTC40628		1	
92055	92055-0006	RING-O,29.7X2.4		1	
92062	92062-1086	NOZZLE,5X6,SILVER		1	
92066	92066-0003	PLUG,PT3/8X10		1	
92066A	92066-0056	PLUG,INPUT SHAFT		1	
92066B	92066-0061	PLUG,25X5		1	
92151	92151-1389	BOLT,FLANGED-SMALL,6X10		6	
92151A	92151-1937	BOLT,6X22		2	
92153	92153-0530	BOLT,8X20		1	
92153A	92153-0962	BOLT,FLANGED,6X30		6	
92153B	92153-0963	BOLT,FLANGED,7X26		3	
92153C	92153-0964	BOLT,FLANGED-SMALL,6X8		7	
92153D	92153-1414	BOLT,SOCKET,6X8		2	
92153E	92153-1805	BOLT		2	
92161	92161-0267	DAMPER		1	
92170	92170-1167	CLAMP		2	
92192	92192-0225	TUBE,9X12X38		1	
290	290Q0606	SCREW-SET-SOCKET,6X6		1	
551	551A0814	PIN-DOWEL,8X14		3	

This catalog covers:

'07 KLE650 A7F Engine

GRID NO. **C-5**

This grid covers:

Crankcase(2/2)

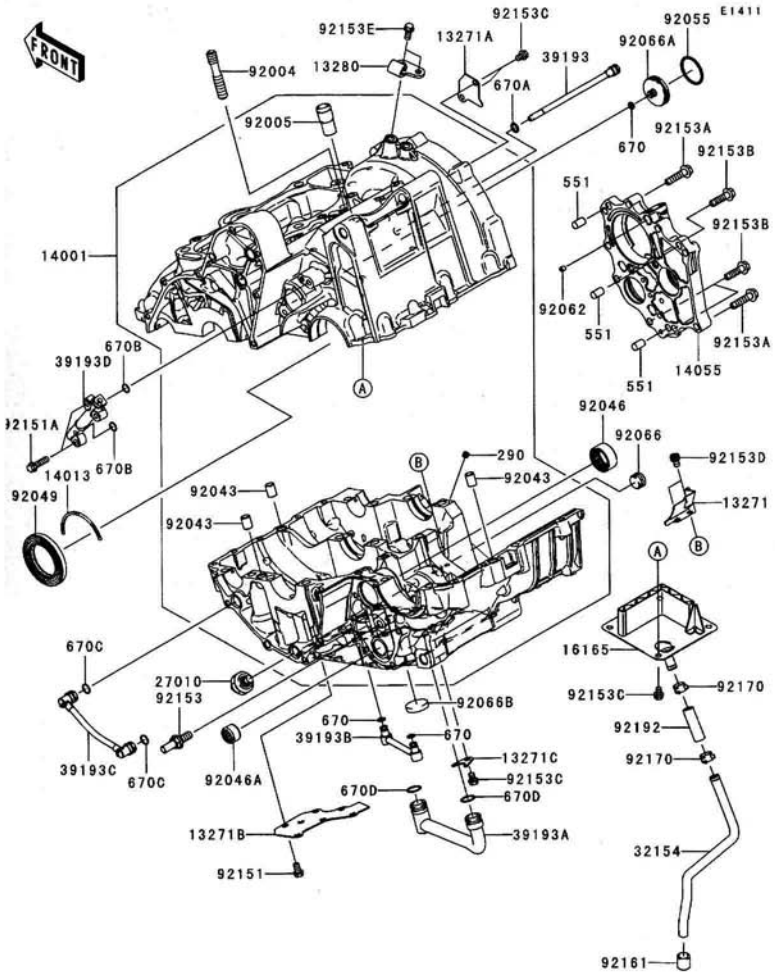

Ref. No.	Part No.	Description	Spec Code	Quantity-KLE650 '07	A7F
670	670D1505	O RING		3	
670A	670D1508	O RING,8MM		1	
670B	670D1509	O RING,9MM		2	
670C	670D1510	O RING,10MM		2	
670D	670D2014	O RING,14MM		2	

This catalog covers:

’07 KLE650 A7F Engine

GRID NO. **C-6**

This grid covers:

Crankease Bolt Pattern

E1412

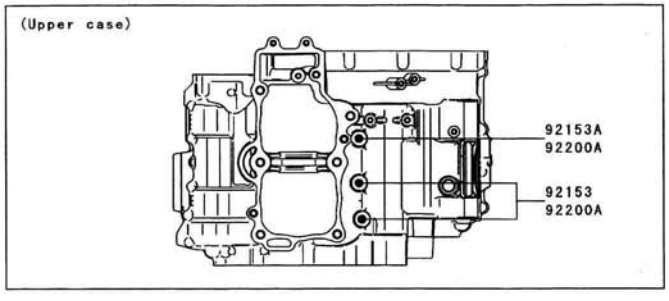

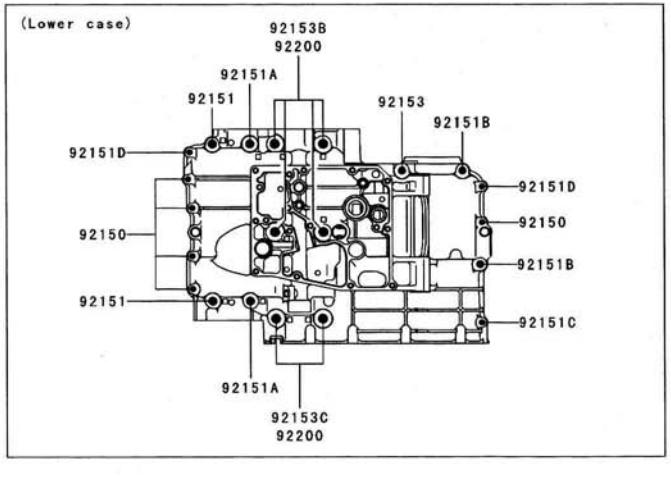

Ref. No.	Part No.	Description	Spec Code	Quantity-KLE650 '07				
				A7F				
92150	92150-1301	BOLT,6X38		5				
92151	92151-1461	BOLT,8X60		2				
92151A	92151-1462	BOLT,8X73		2				
92151B	92151-1463	BOLT,8X50		2				
92151C	92151-1464	BOLT,6X32		1				
92151D	92151-1465	BOLT,6X45		2				
92153	92153-0959	BOLT,FLANGED,8X110		3				
92153A	92153-0960	BOLT,FLANGED,8X120		1				
92153B	92153-1449	BOLT,FLANGED,9X113		4				
92153C	92153-1450	BOLT,FLANGED,9X83		2				
92200	92200-0115	WASHER,9.2X19X23		6				
92200A	92200-1063	WASHER,8.5X16X1.2		3				

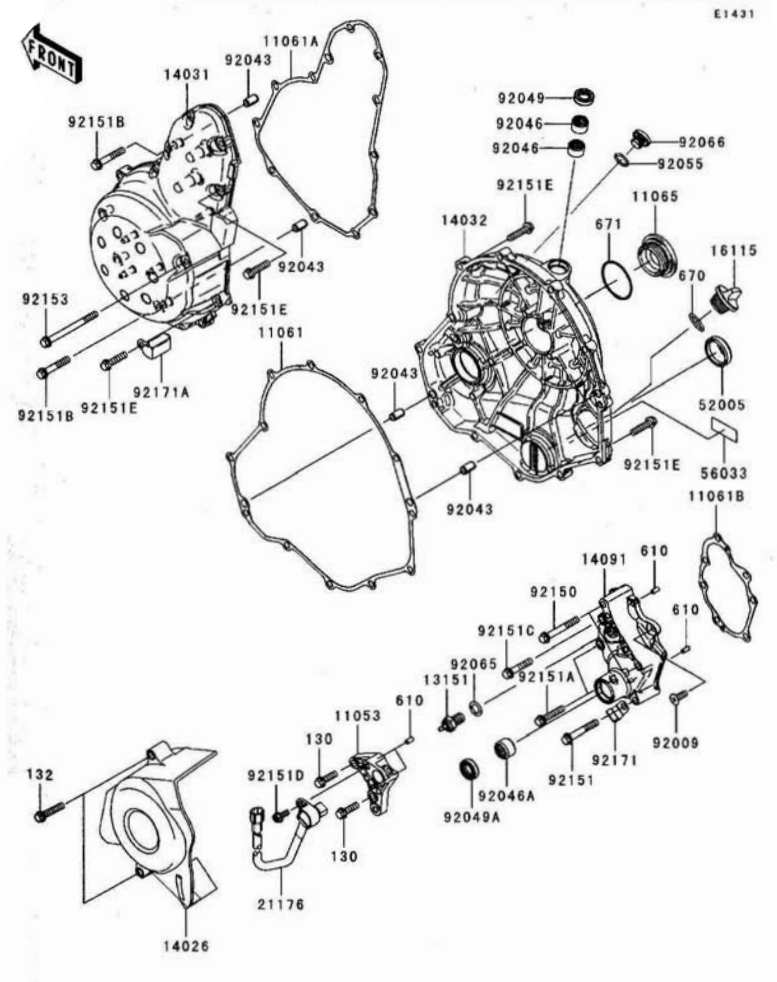

Ref. No.	Part No.	Description	Spec Code	Quantity-KLE650 '07 A7F				
11053	11053-1739	BRACKET		1				
11061	11061-0164	GASKET,CLUTCH COVER		1				
11061A	11061-0165	GASKET,GENERATOR COVER		1				
11061B	11061-0166	GASKET,TRANSMISSION COVER		1				
11065	11065-0182	CAP		1				
13151	13151-1080	SWITCH-COMP,NEUTRAL		1				
14026	14026-0021	COVER-CHAIN		1				
14031	14031-0078	COVER-GENERATOR		1				
14032	14032-0094	COVER-CLUTCH		1				
14091	14091-0720	COVER,TRANSMISSION		1				
16115	16115-1053	CAP-OIL FILLER		1				
21176	21176-0065	SENSOR,SPEED		1				
52005	52005-1057	GAUGE,OIL LEVEL		1				
56033	56033-0131	LABEL-MANUAL,OIL CAPACITY		1				
92009	92009-1360	SCREW,6X16		1				
92043	92043-1263	PIN,6.2X8X14		4				
92046	92046-1010	BEARING-NEEDLE,HK1210		2				
92046A	92046-1148	BEARING-NEEDLE,HK1312		1				
92049	92049-1475	SEAL-OIL,CLUTCH RELEASE		1				
92049A	92049-1519	SEAL-OIL,TC13225.5		1				
92055	92055-1011	RING-O,13.0X1.9		1				
92065	92065-058	GASKET,10.5X16X1		1				
92066	92066-0088	PLUG,TIMING HOLE		1				
92150	92150-1884	BOLT,6X45		2				
92151	92151-1131	BOLT,6X40		1				
92151A	92151-1134	BOLT,6X30		2				
92151B	92151-1135	BOLT,6X35		2				
92151C	92151-1201	BOLT,6X30		1				
92151D	92151-1305	BOLT,FLANGED,5X12		1				
92151E	92151-1930	BOLT,FLANGED-SMALL,6X25		21				
92153	92153-0018	BOLT,FLANGED,6X70		1				
92171	92171-0813	CLAMP		1				
92171A	92171-0911	CLAMP		1				
130	130G0620	BOLT-FLANGED,6X20		2				
132	132J0630	BOLT-FLANGED-SMALL,6X30		2				
610	610A0408	ROLLER,4X8		4				
670	670B2020	O RING,20MM		1				
671	671B2540	O RING,40MM		1				

This catalog covers:

’07 KLE650 A7F Engine

GRID NO. **C-8**

This grid covers:

Oil Pan

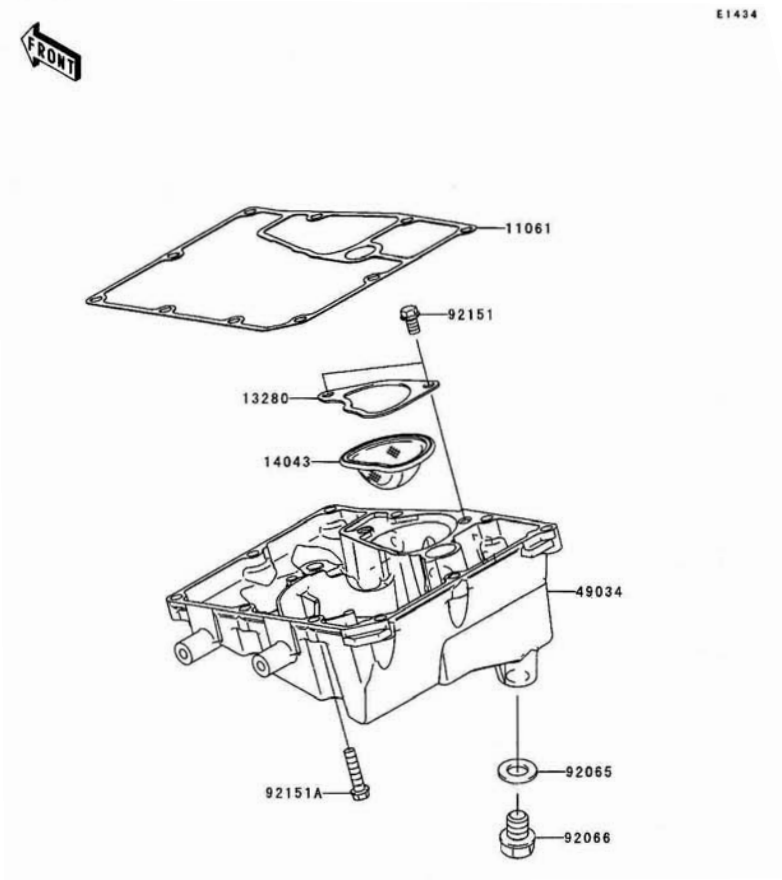

Ref. No.	Part No.	Description	Spec Code	Quantity-KLE650 '07 A7F				
11061	11061-0167	GASKET,OIL PAN		1				
13280	13280-0134	HOLDER,OIL FILTER		1				
14043	14043-0008	FILTER,OIL(SCAVENGE)		1				
49034	49034-0014	PAN-OIL		1				
92065	92065-097	GASKET,12X22X2		1				
92066	92066-0086	PLUG,DRAIN,12X22		1				
92151	92151-1389	BOLT,FLANGED-SMALL,6X10		2				
92151A	92151-1930	BOLT,FLANGED-SMALL,6X25		10				

This catalog covers:

’07 KLE650 A7F Engine

GRID NO. **C-9**

This grid covers:

Throttle

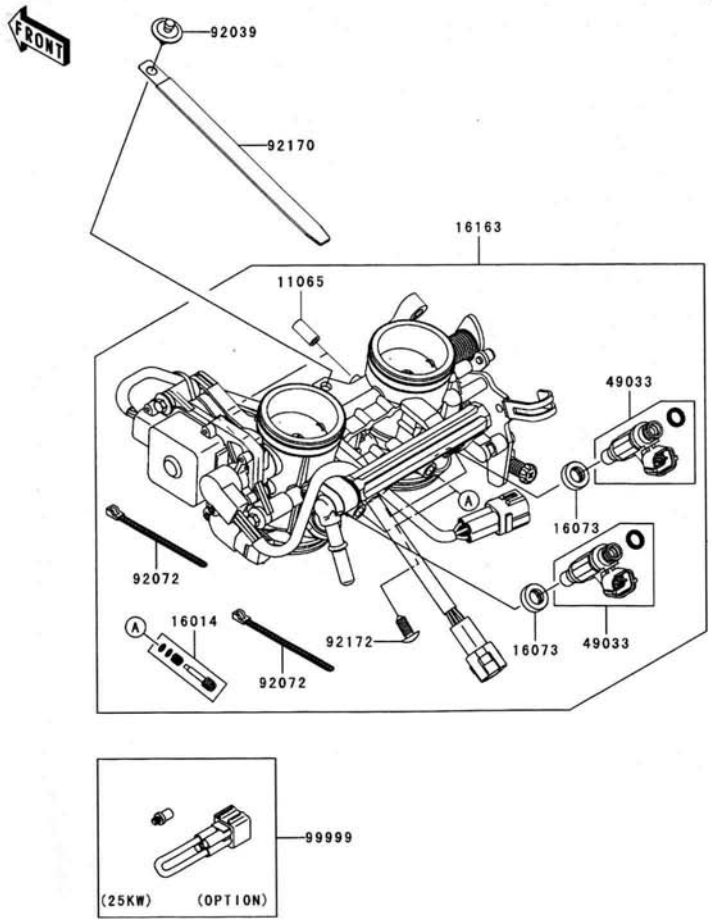

E1510

Ref. No.	Part No.	Description	Spec Code	Quantity-KLE650 '07 A7F				
11065	11065-0018	CAP		2				
16014	16014-0002	SCREW-PILOT AIR		2				
16073	16073-3707	INSULATOR		2				
16163	16163-0099	THROTTLE-ASSY,TTK38		1				
49033	49033-0011	NOZZLE-INJECTION		2				
92039	92039-0015	RIVET		1				
92072	92072-0012	BAND,SUB-HARNESS		2				
92170	92170-1114	CLAMP,L=150		1				
92172	92172-0064	SCREW,PIPE INJECTION		2				
99999	99999-0103 (OPTION)	KIT.,25KW		1				

This catalog covers:

’07 KLE650 A7F Engine

GRID NO. **C-10**

This grid covers:

Fuel Pump

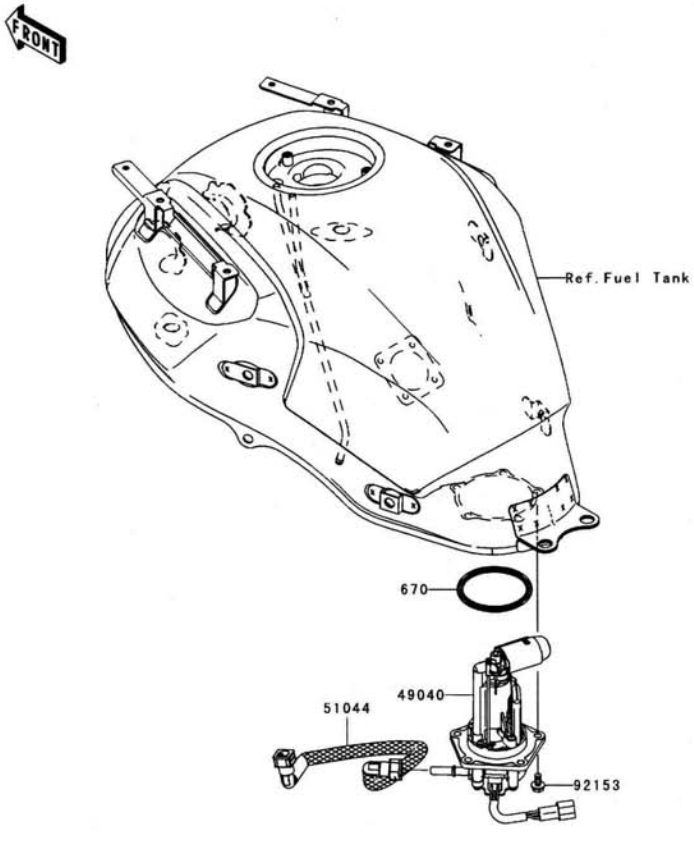

Ref. No.	Part No.	Description	Spec Code	Quantity-KLE650 '07 A7F				
49040	49040-0026	PUMP-FUEL		1				
51044	51044-0034	TUBE-ASSY		1				
92153	92153-1283	BOLT,FLANGED,6X12		5				
670	670E5065	O RING		1				

This catalog covers:

’07 KLE650 A7F Engine

GRID NO. **C-11**

This grid covers:

Fuel Injection

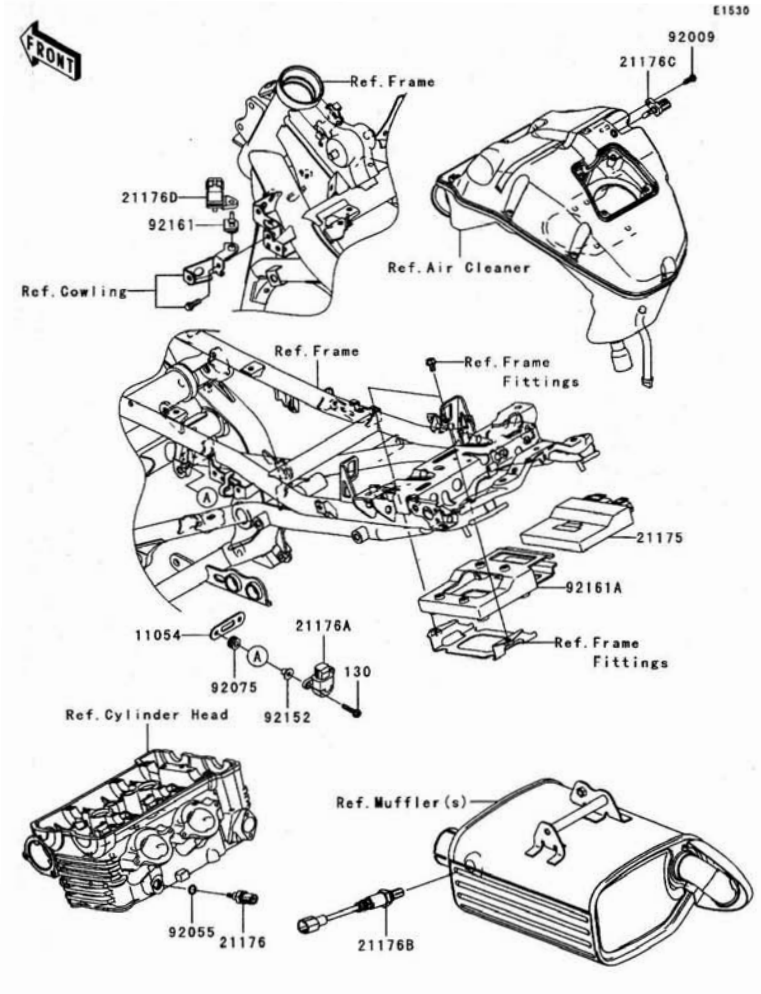

Ref. No.	Part No.	Description	Spec Code	Quantity-KLE650 '07				
				A7F				
11054	11054-0133	BRACKET		1				
21175	21175-0103	CONTROL UNIT-ELECTRONIC		1				
21176	21176-0009	SENSOR,WATER TEMP		1				
21176A	21176-0026	SENSOR,VEHICLE-DOWN		1				
21176B	21176-0035	SENSOR,OXYGEN		1				
21176C	21176-0048	SENSOR,AIR TEMPERATURE		1				
21176D	21176-0058	SENSOR,PRESSURE		1				
92009	92009-1984	SCREW,TAPPING,5X16		1				
92055	92055-0016	RING-O,9.5X1.9		1				
92075	92075-1912	DAMPER		2				
92152	92152-0134	COLLAR		2				
92161	92161-0041	DAMPER		1				
92161A	92161-0179	DAMPER		1				
130	130J0525	BOLT-FLANGED,5X25		2				

This catalog covers:

’07 KLE650 A7F Engine

GRID NO. **C-12**

This grid covers:

Oil Pumo

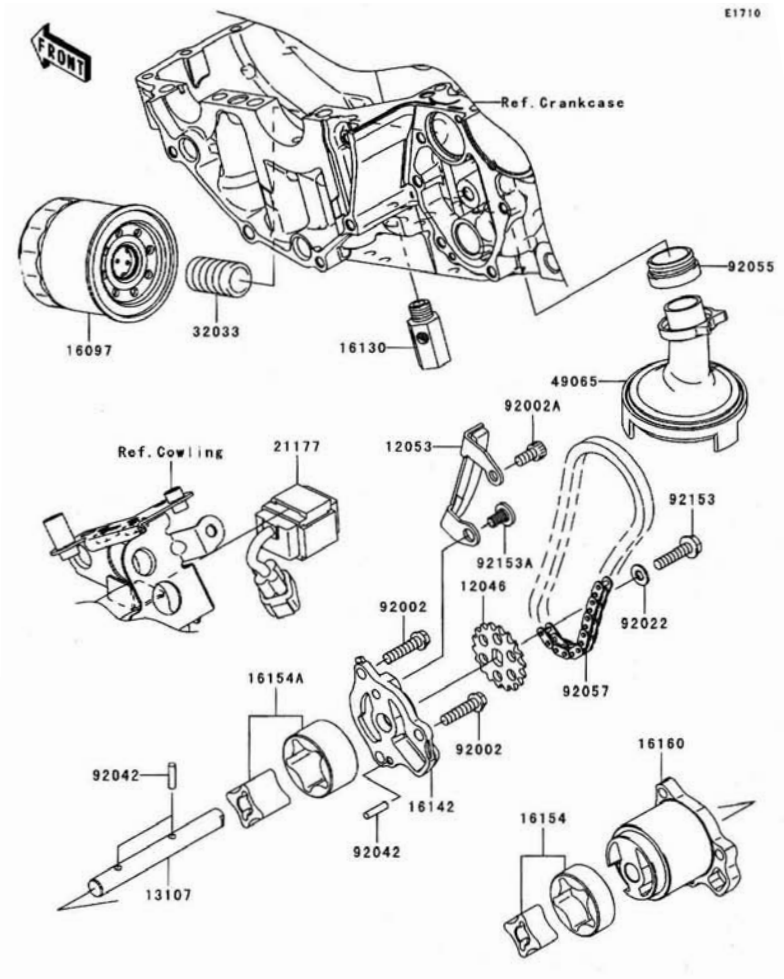

Ref. No.	Part No.	Description	Spec Code	Quantity-KLE650 '07 A7F
12046	12046-0040	SPROCKET,18T,BF04M		1
12053	12053-0071	GUIDE-CHAIN		1
13107	13107-0156	SHAFT,OIL PUMP		1
16097	16097-0004	FILTER-ASSY-OIL		1
16130	16130-1058	VALVE-ASSY-RELIEF		1
16142	16142-0024	COVER-PUMP		1
16154	16154-0037	ROTOR-PUMP,L=14		1
16154A	16154-1115	ROTOR-PUMP,40.56X22		1
16160	16160-0110	BODY		1
21177	21177-1058	CONTROLLER,OIL LAMP		1
32033	32033-1535	PIPE,OIL FILTER		1
49065	49065-0011	FILTER-OIL		1
92002	92002-1344	BOLT,6X25		3
92002A	92002-1796	BOLT,SOCKET,6X12		1
92022	92022-1827	WASHER,6X12.8X1.2		1
92042	92042-014	PIN,DOWEL,4X15.8		3
92055	92055-1354	RING-O,OIL FILTER		1
92057	92057-0098	CHAIN,DID 215FD-DHA,56LE		1
92153	92153-0952	BOLT,FLANGED,6X25		1
92153A	92153-0969	BOLT,SOCKET,6X11		1

This catalog covers:

’07 KLE650 A7F Engine

GRID NO. **C-13**

This grid covers:

Generator

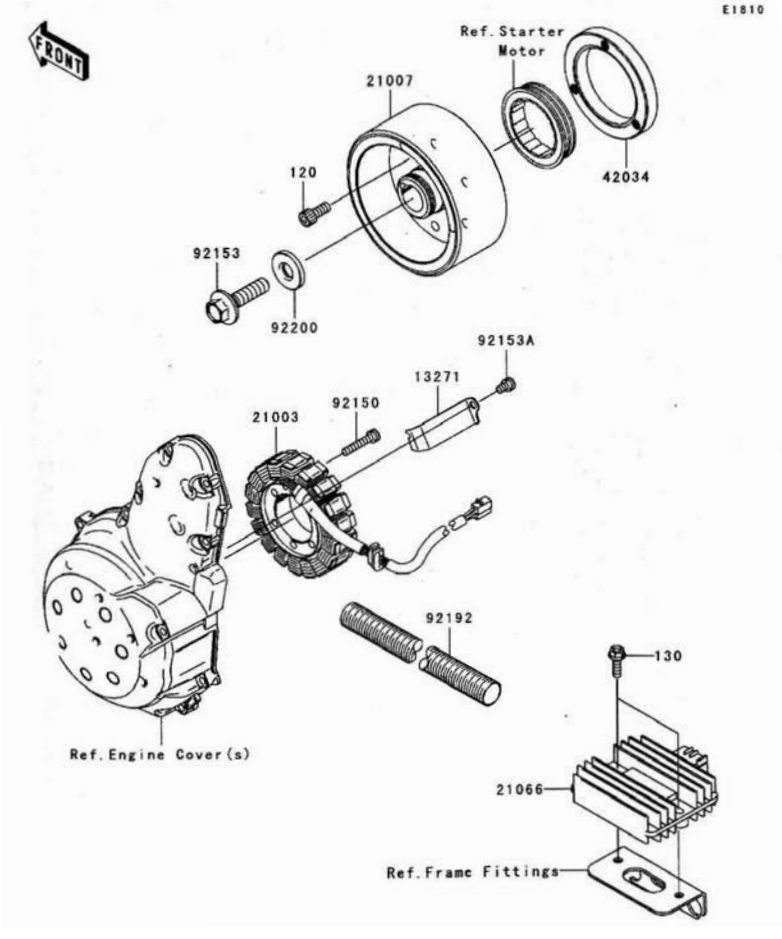

Ref. No.	Part No.	Description	Spec Code	Quantity-KLE650 '07				
				A7F				
13271	13271-0952	PLATE		1				
21003	21003-0042	STATOR		1				
21007	21007-0075	ROTOR		1				
21066	21066-1127	REGULATOR-VOLTAGE		1				
42034	42034-1143	COUPLING		1				
92150	92150-1433	BOLT,SOCKET,6X30		3				
92153	92153-0951	BOLT,FLANGED,12X45		1				
92153A	92153-1414	BOLT,SOCKET,6X8		1				
92192	92192-0315	TUBE,CORRUGATED,L=175		1				
92200	92200-0220	WASHER,12X33X5		1				
120	120P0818	BOLT-SOCKET,8X18		3				
130	130J0620	BOLT-FLANGED,6X20		2				

This catalog covers:

’07 KLE650 A7F Engine

GRID NO. **C-14**

This grid covers:

Ignition System

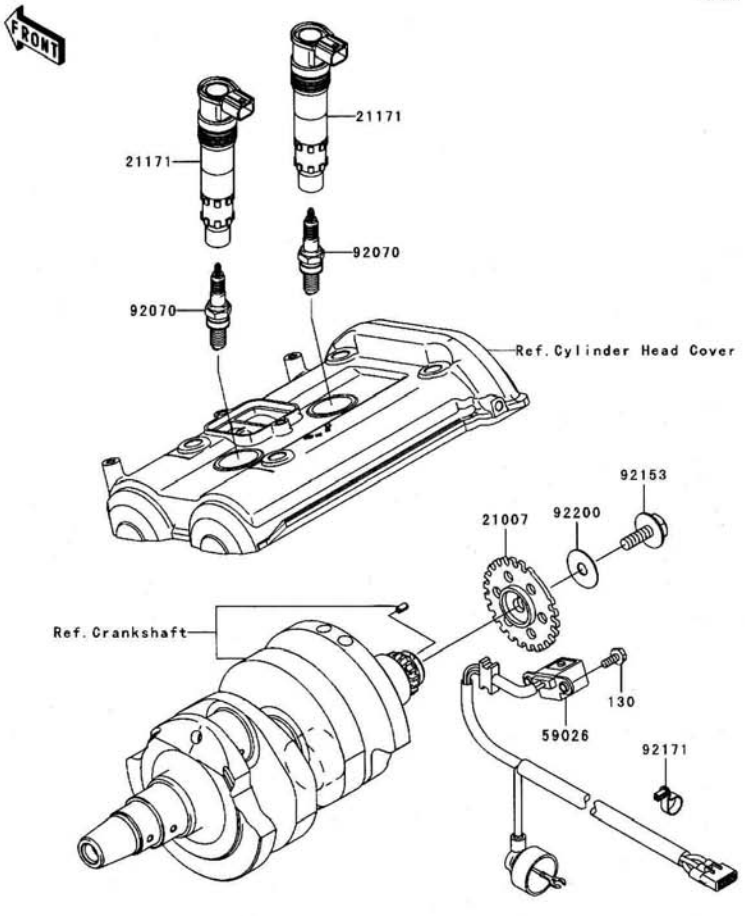

Ref. No.	Part No.	Description	Spec Code	Quantity-KLE650 '07 A7F				
21007	21007-0053	ROTOR,PULSING		1				
21171	21171-1286	COIL-ASSY-IGNITION		2				
59026	59026-0018	COIL-PULSING		1				
92070	92070-0014	PLUG-SPARK,CR9EIA(NGK)		AR				
92153	92153-0549	BOLT,FLANGED,8X23		1				
92171	92171-0836	CLAMP,SPEED		1				
92200	92200-0274	WASHER,8.5X28X0.8		1				
130	130G0512	BOLT-FLANGED,5X12		2				

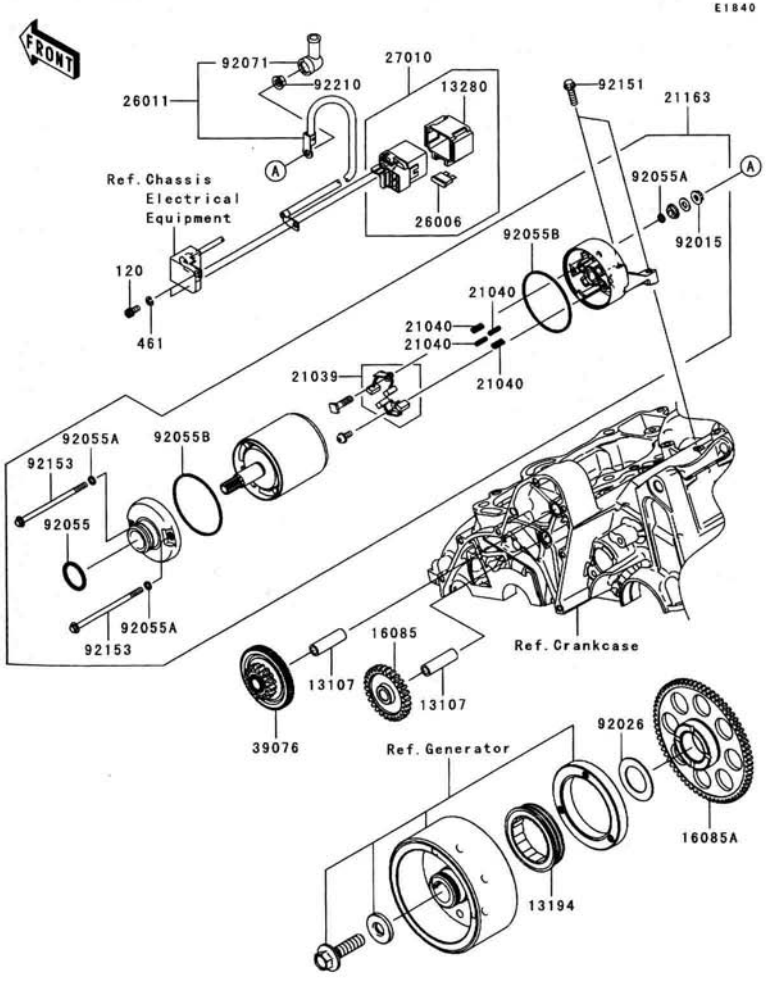

Ref. No.	Part No.	Description	Spec Code	Quantity-KLE650 '07 A7F				
13107	13107-1106	SHAFT,IDLE GEAR		2				
13194	13194-1083	CLUTCH-ONEWAY		1				
13280	13280-1263	HOLDER		1				
16085	16085-0074	GEAR,IDLE,28T		1				
16085A	16085-0076	GEAR,67T		1				
21039	21039-0004	BRUSH,CARBON		1				
21040	21040-0003	SPRING-BRUSH		4				
21163	21163-0040	STARTER-ELECTRIC		1				
26006	26006-1006	FUSE,30A-G		1				
26011	26011-0083	WIRE-LEAD		1				
27010	27010-1446	SWITCH,MAGNETIC		1				
39076	39076-0006	LIMITER,16T&66T		1				
92015	92015-1476	NUT,STARTER MOTOR		1				
92026	92026-087	SPACER,29.1X47.5X1.2		1				
92055	92055-1276	RING-O		1				
92055A	92055-1370	RING-O,4.5X2.0		3				
92055B	92055-1381	RING-O,STARTER MOTOR		2				
92071	92071-0024	GROMMET		1				
92151	92151-1937	BOLT,6X22		2				
92153	92153-1783	BOLT		2				
92210	92210-0188	NUT,6MM		1				
120	120S0510	BOLT-SOCKET,5X10		2				
461	461K0500	WASHER-SPRING,5MM,BLACK		2				

This catalog covers:

’07 KLE650 A7F Engine

GRID NO. **D-4**

This grid covers:

Water Pump

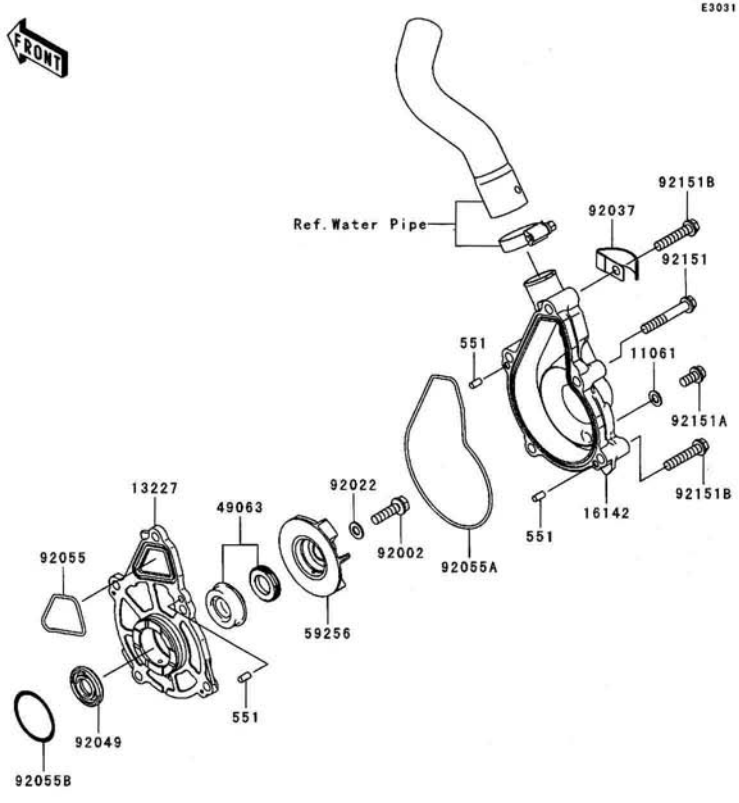

Ref. No.	Part No.	Description	Spec Code	Quantity-KLE650 '07	A7F
11061	11061-0107	GASKET		1	
13227	13227-0012	HOUSING		1	
16142	16142-0046	COVER-PUMP		1	
49063	49063-1055	SEAL-MECHANICAL,WATER		1	
59256	59256-0007	IMPELLER		1	
92002	92002-1154	BOLT,6X22		1	
92022	92022-077	WASHER,6.1X12X1		1	
92037	92037-1680	CLAMP		1	
92049	92049-1259	SEAL-OIL,SC12 28.555		1	
92055	92055-0082	RING-O,CASE-HOUSING		1	
92055A	92055-0083	RING-O,HOUSING-PUMP COVER		1	
92055B	92055-1155	RING-O,33.2MM		1	
92151	92151-1131	BOLT,6X40		3	
92151A	92151-1133	BOLT,6X12		1	
92151B	92151-1134	BOLT,6X30		2	
551	551A0408	PIN-DOWEL,4X8		3	

This catalog covers:

’07 KLE650 A7F Engine

GRID NO. **D-5**

This grid covers:

Radiador

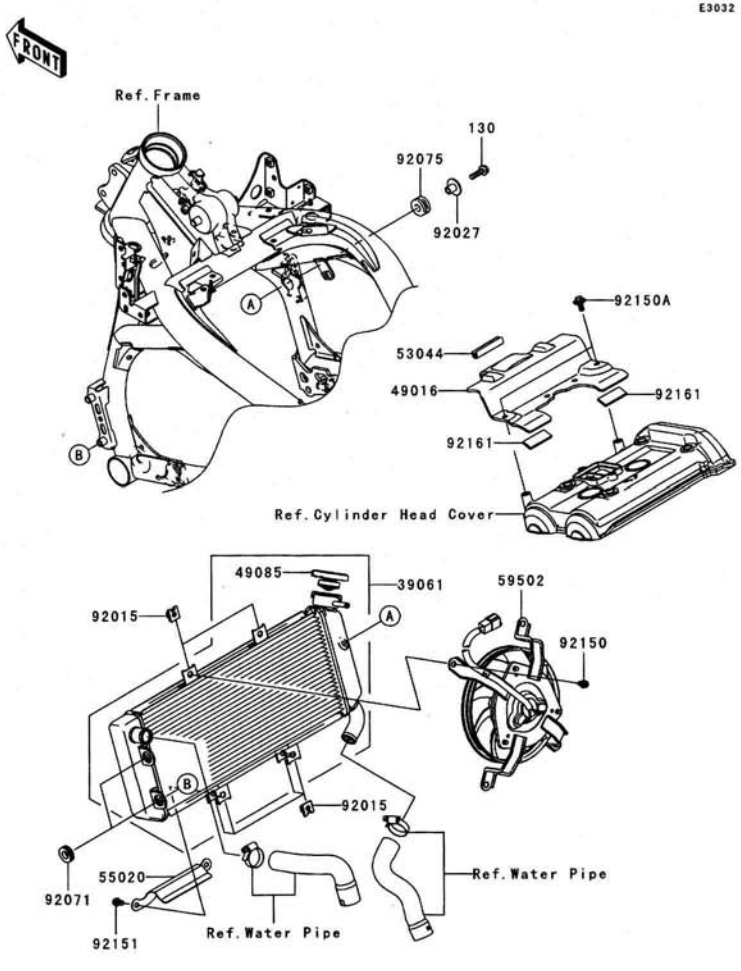

Ref. No.	Part No.	Description	Spec Code	Quantity-KLE650 ’07 A7F				
39061	39061-0097	RADIATOR-ASSY		1				
49016	49016-0033	COVER-SEAL,HOT WIND		1				
49085	49085-1066	CAP-ASSY-PRESSURE		1				
53044	53044-1185	TRIM,L=50		1				
55020	55020-0343	GUARD		1				
59502	59502-0019	FAN-ASSY		1				
92015	92015-1487	NUT		6				
92027	92027-251	COLLAR,L=13.1		1				
92071	92071-1115	GROMMET		2				
92075	92075-1690	DAMPER		1				
92150	92150-1186	BOLT,6X12		4				
92150A	92150-1689	BOLT,FLANGED,6X14		2				
92151	92151-1277	BOLT,6X10		2				
92161	92161-0301	DAMPER		2				
130	130H0622	BOLT-FLANGED,6X22		1				

This catalog covers:

’07 KLE650 A7F Engine

GRID NO. **D-6**

This grid covers:

Water Pipe

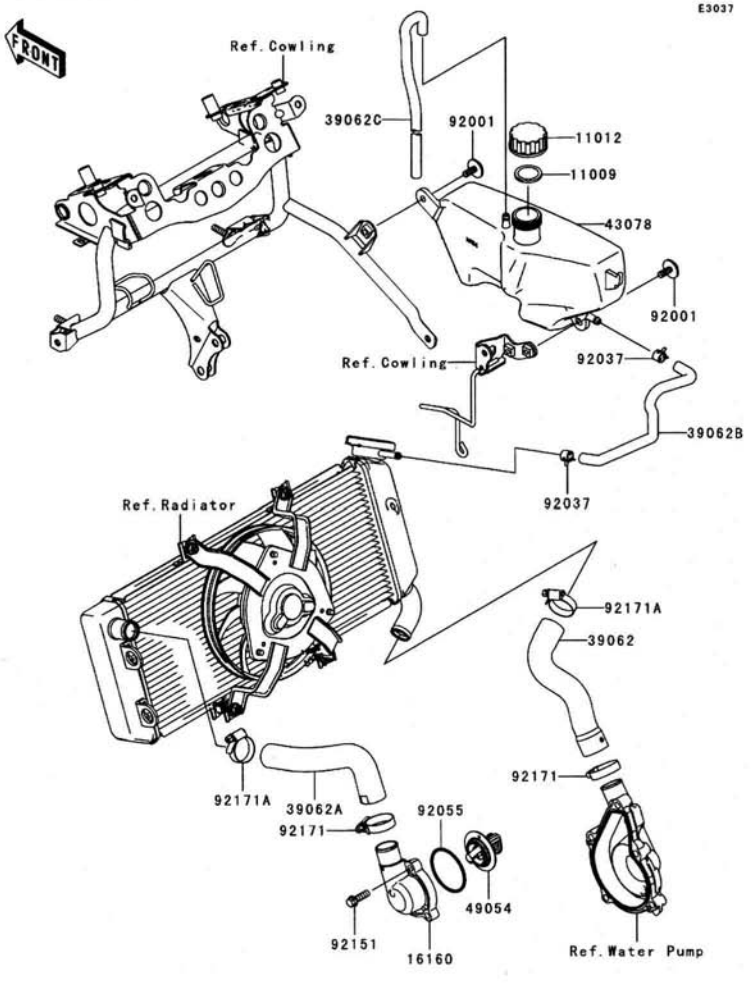

Ref. No.	Part No.	Description	Spec Code	Quantity-KLE650 '07 A7F			
11009	11009-1145	GASKET,RESERVOIR TANK CAP		1			
11012	11012-1084	CAP		1			
16160	16160-0118	BODY,THERMOSTAT		1			
39062	39062-0161	HOSE-COOLING,W.PUMP-RAD		1			
39062A	39062-0162	HOSE-COOLING,HEAD-RAD		1			
39062B	39062-0163	HOSE-COOLING,RAD-RESERVOIR		1			
39062C	39062-0164	HOSE-COOLING,BREATHER		1			
43078	43078-0035	RESERVOIR		1			
49054	49054-0001	THERMOSTAT		1			
92001	92001-1950	BOLT,6X16		2			
92037	92037-1505	CLAMP,TUBE		2			
92055	92055-1279	RING-O,44.7X2.4		1			
92151	92151-1252	BOLT,FLANGED-SMALL,6X20		3			
92171	92171-0261	CLAMP		2			
92171A	92171-0337	CLAMP		2			

This catalog covers:

’07 KLE650 A7F Chassis

GRID NO. **E-3**

This grid covers:

Frame

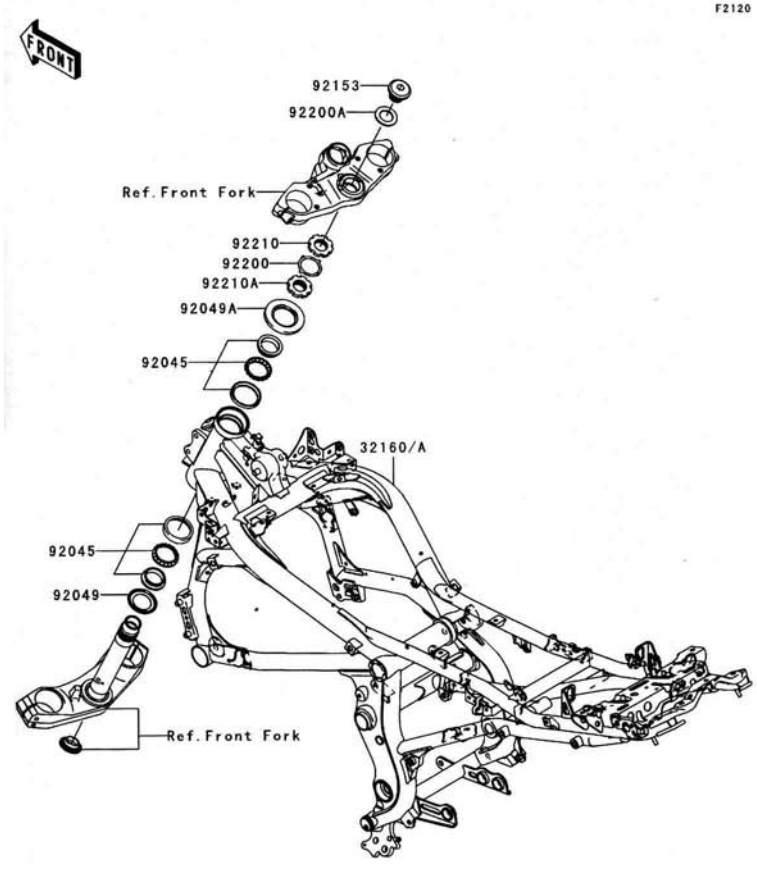

Ref. No.	Part No.	Description	Spec Code	Quantity-KLE650 ’07 A7F				
32160	32160-0179-11E	FRAME-COMP,F.S.BLACK		1				
32160A	32160-0179-458	FRAME-COMP,P.SILVER		1				
92045	92045-1384	BEARING-BALL,SF07A17PX1V1		2				
92049	92049-0022	SEAL-OIL,DS35X55X4		1				
92049A	92049-1483	SEAL-OIL,MX043N2		1				
92153	92153-0474	BOLT,26MM		1				
92200	92200-0036	WASHER		1				
92200A	92200-0081	WASHER,27X42X2.3		1				
92210	92210-0062	NUT,STEERING STEM 35MM		1				
92210A	92210-0077	NUT,STEERING STEM,35MM		1				

GRID NO. **E-4**

This grid covers:
Engine Mount

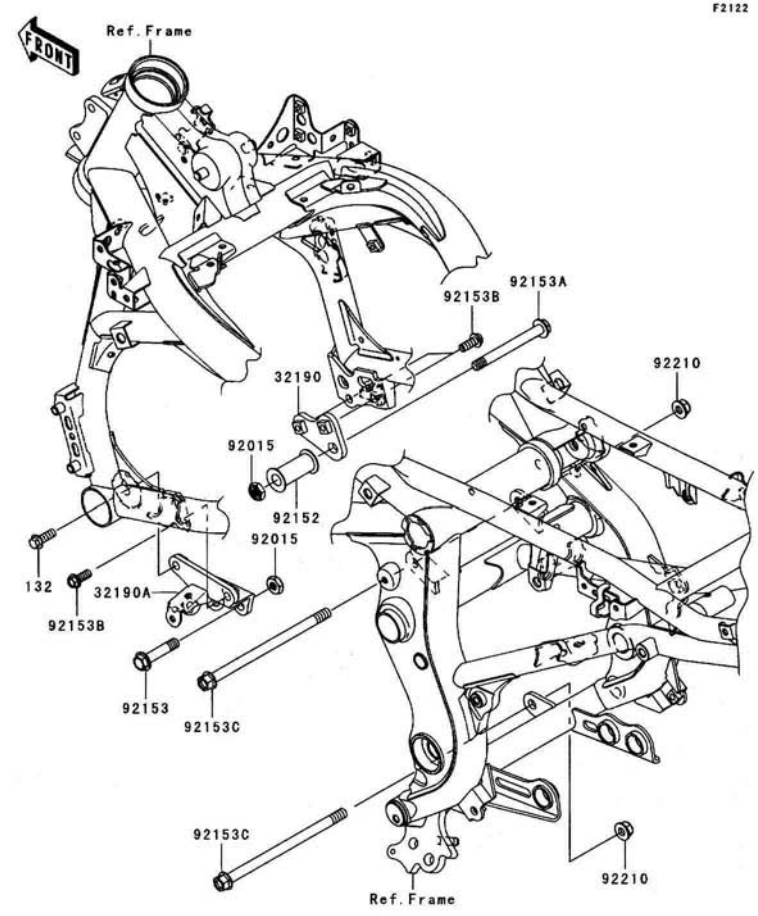

Ref. No.	Part No.	Description	Spec Code	Quantity-KLE650 '07 A7F
32190	32190-0189	BRACKET-ENGINE,RH		1
32190A	32190-0252	BRACKET-ENGINE,LH		1
92015	92015-1188	NUT,LOCK,10MM,BLACK		2
92152	92152-0311	COLLAR,ENGINE MOUNT		1
92153	92153-0823	BOLT,FLANGED,10X47		1
92153A	92153-0976	BOLT,FLANGED,10X95		1
92153B	92153-0995	BOLT,FLANGED,8X20		3
92153C	92153-1428	BOLT,FLANGED,10X170		2
92210	92210-1081	NUT,LOCK,FLANGED,10MM		2
132	132L0822	BOLT-FLANGED-SMALL,8X22		1

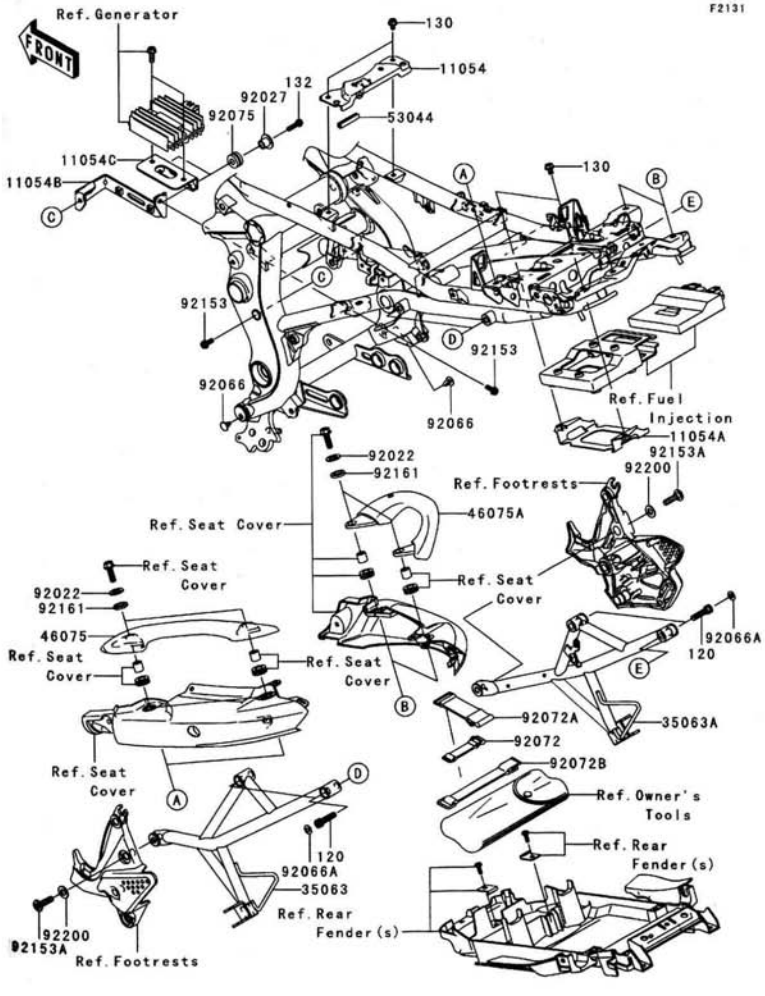

Ref. No.	Part No.	Description	Spec Code	Quantity-KLE650 '07 A7F			
11054	11054-0248	BRACKET,FUEL TANK		1			
11054A	11054-0370	BRACKET,ECU		1			
11054B	11054-1283	BRACKET,REGULATOR		1			
11054C	11054-1284	BRACKET,REGULATOR		1			
35063	35063-0408-11E	STAY,STEP,RR,LH,F.S.BLACK		1			
35063A	35063-0409-11E	STAY,STEP,RR,RH,F.S.BLACK		1			
46075	46075-0057	GRIP,LH		1			
46075A	46075-0058	GRIP,RH		1			
53044	53044-0012	TRIM,L=40		1			
92022	92022-3026	WASHER,PLAIN		4			
92027	92027-1450	COLLAR,L=13.1,BLACK		2			
92066	92066-1103	PLUG		2			
92066A	92066-1216	PLUG		4			
92072	92072-1085	BAND		1			
92072A	92072-1176	BAND,TOOL		1			
92072B	92072-1203	BAND,L=150		1			
92075	92075-209	DAMPER		2			
92153	92153-1517	BOLT,SOCKET,6X16		2			
92153A	92153-1630	BOLT,SOCKET,8X30		2			
92161	92161-0460	DAMPER		4			
92200	92200-0328	WASHER,10.2X20X1.6		2			
120	120S0830	BOLT-SOCKET,8X30		4			
130	130L0610	BOLT-FLANGED,6X10		4			
132	132J0622	BOLT-FLANGED-SMALL,6X22		2			

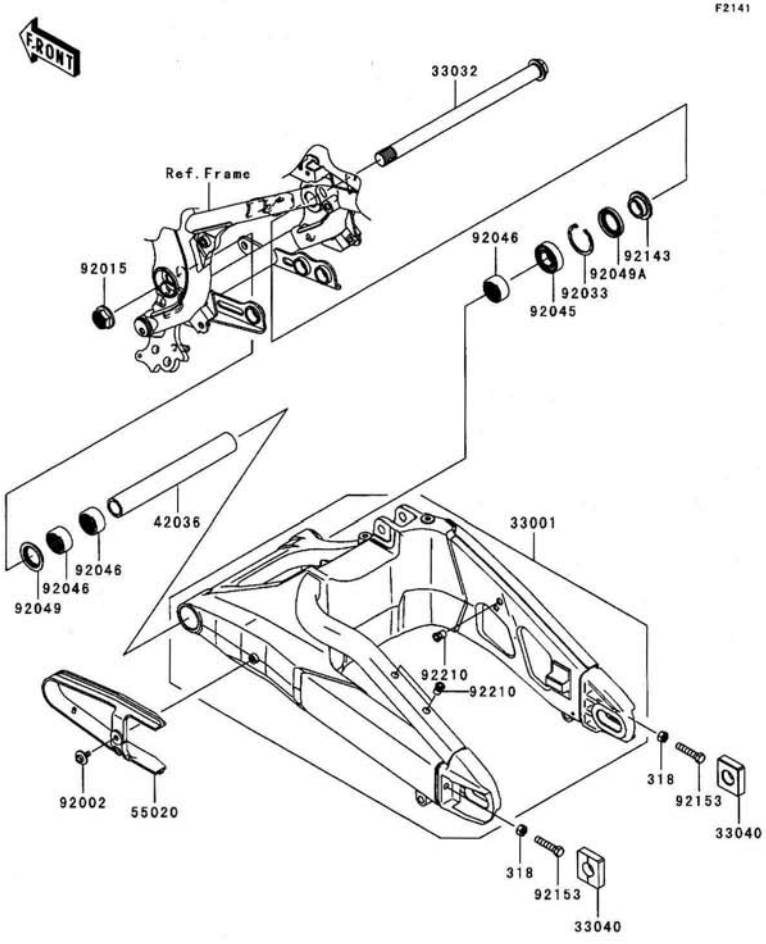

Ref. No.	Part No.	Description	Spec Code	Quantity-KLE650 '07 A7F
33001	33001-0090-458	ARM-COMP-SWING,P.SILVER		1
33032	33032-1142	SHAFT-SWING ARM		1
33040	33040-1109	ADJUSTER-CHAIN		2
42036	42036-1358	SLEEVE,SWING ARM,L=219.5		1
55020	55020-0234	GUARD,CHAIN		1
92002	92002-1187	BOLT,6X16		1
92015	92015-1724	NUT,FLANGED,20MM		1
92033	92033-1041	RING-SNAP,42MM		1
92045	92045-0017	BEARING-BALL,6004UL11		1
92046	92046-0008	BEARING-NEEDLE,7E-HVS 28X34X17		3
92049	92049-1181	SEAL-OIL		1
92049A	92049-1185	SEAL-OIL,TC28426.5		1
92143	92143-1727	COLLAR,SWING ARM,RH,L=12.5		1
92153	92153-0736	BOLT,8X40		2
92210	92210-0099	NUT,6MM		3
318	318L0800	NUT-HEX-SMALL		2

This catalog covers:

’07 KLE650 A7F Chassis

GRID NO.

E-7

This grid covers:

Suspension/Shock Absorber

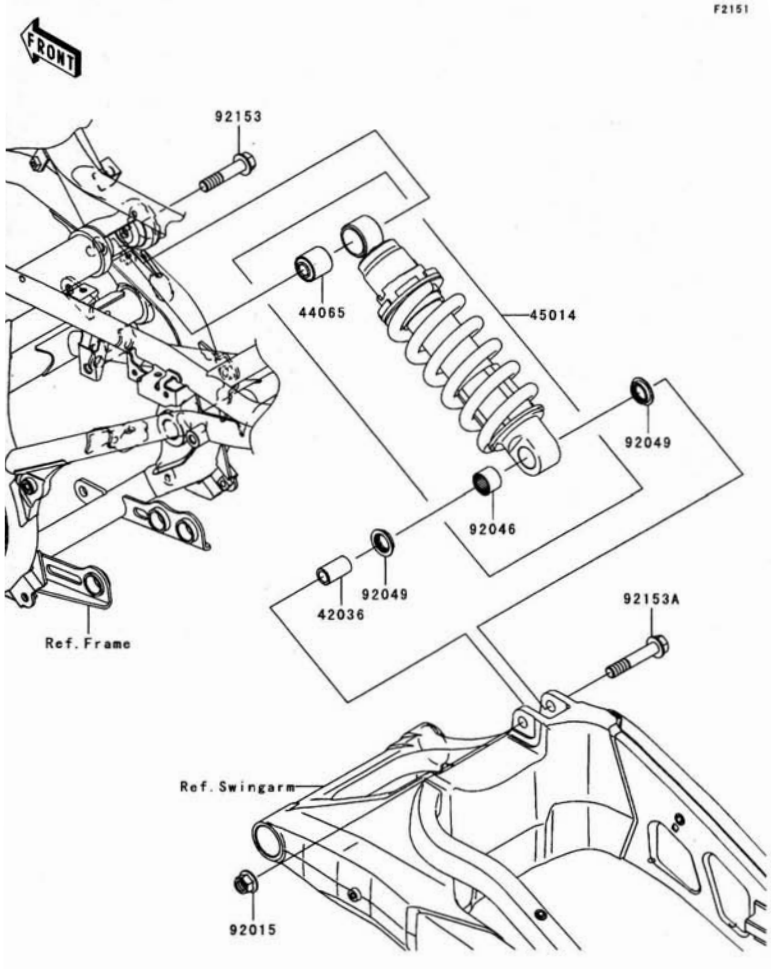

Ref. No.	Part No.	Description	Spec Code	Quantity-KLE650 ’07 A7F				
42036	42036-0024	SLEEVE,12.1X18X32		1				
44065	44065-1017	BUSHING,SHOCKABSORBER		1				
45014	45014-0147-23A	SHOCKABSORBER,SPG,SIL+BODY,BLK		1				
92015	92015-1433	NUT,LOCK,FLANGED,12MM		1				
92046	92046-1272	BEARING-NEEDLE,SFYZM182417		1				
92049	92049-1493	SEAL-OIL,KCR MF018N1		2				
92153	92153-1766	BOLT,FLANGED,12X55		1				
92153A	92153-1767	BOLT,FLANGED,12X65		1				

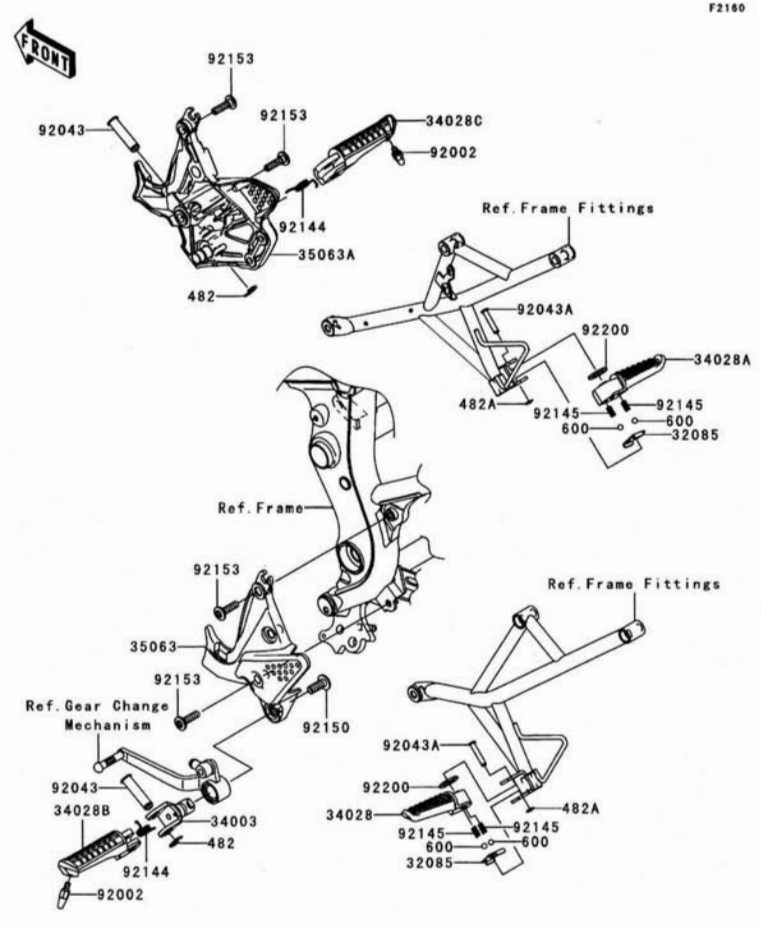

Ref. No.	Part No.	Description	Spec Code	Quantity-KLE650 '07 A7F				
32085	32085-0047	STOPPER,REAR STEP		2				
34003	34003-1474	HOLDER-STEP		1				
34028	34028-0004	STEP,RR,LH		1				
34028A	34028-0005	STEP,RR,RH		1				
34028B	34028-1334	STEP,FR,LH		1				
34028C	34028-1335	STEP,FR,RH		1				
35063	35063-0310-458	STAY,STEP,FR,LH,P.SILVER		1				
35063A	35063-0401-458	STAY,STEP,FR,RH,P.SILVER		1				
92002	92002-1742	BOLT,BANK SENSOR		2				
92043	92043-1145	PIN,12X42.5		2				
92043A	92043-1271	PIN,6X34		2				
92144	92144-1567	SPRING,STEP RETURN		2				
92145	92145-1319	SPRING		4				
92150	92150-1268	BOLT,SOCKET,10X25		1				
92153	92153-1630	BOLT,SOCKET,8X30		4				
92200	92200-0043	WASHER,16X26X2.3		2				
482	482L0100	CIRCLIP-TYPE-E,10MM		2				
482A	482L5000	CIRCLIP-TYPE-E,5MM		2				
600	600A0800	BALL-STEEL,1/4"		4				

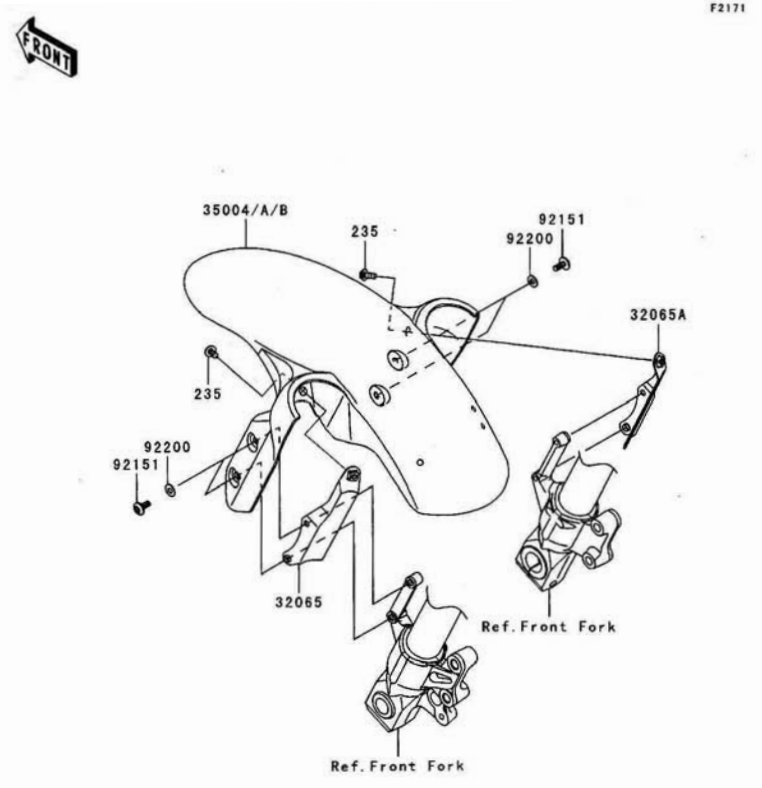

Ref. No.	Part No.	Description	Spec Code	Quantity-KLE650 '07 A7F				
32065	32065-0024	BRACKET-FENDER,LH		1				
32065A	32065-0025	BRACKET-FENDER,RH		1				
35004	35004-0081-H8	FENDER-FRONT,EBONY		1				
35004A	35004-0081-17L	FENDER-FRONT,C.ORANGE		1				
35004B	35004-0081-17M	FENDER-FRONT,SILVER		1				
92151	92151-1654	BOLT,SOCKET,6X14		4				
92200	92200-1388	WASHER,6.5X14X1		4				
235	235B0614	SCREW-PAN-WP-CROS,6X14		2				

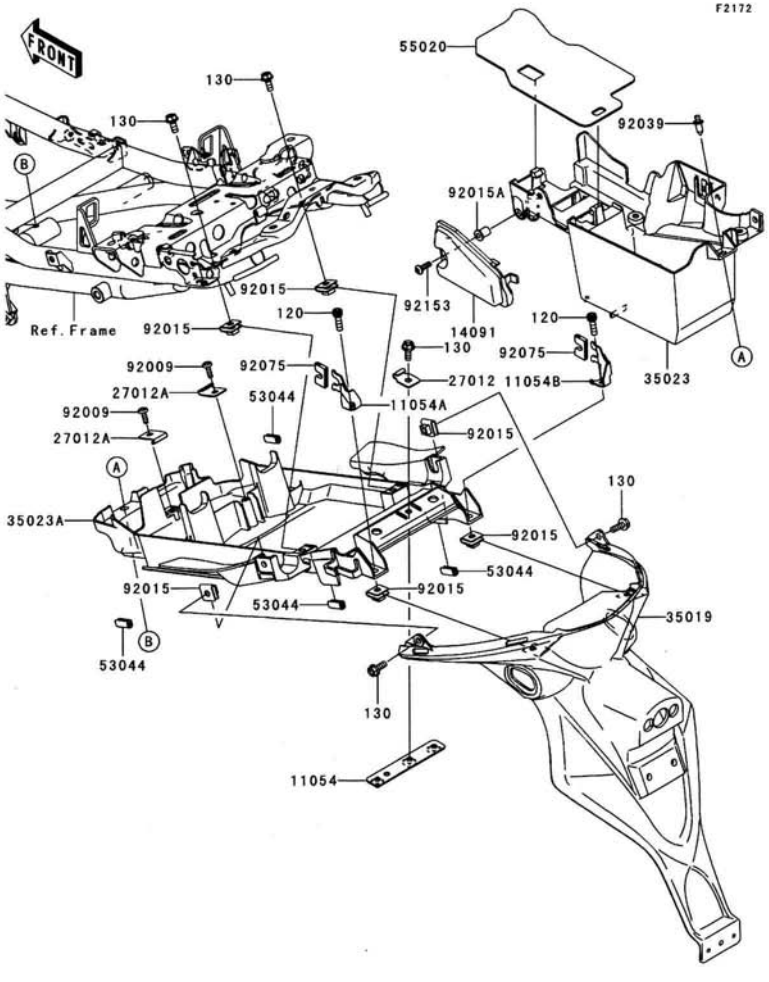

Ref. No.	Part No.	Description	Spec Code	Quantity-KLE650 '07 A7F
11054	11054-0466	BRACKET,TAIL LAMP		1
11054A	11054-1524	BRACKET,FLAP,RR,LH		1
11054B	11054-1525	BRACKET,FLAP,RR,RH		1
14091	14091-0715	COVER,SWITCH MAINTENANCE		1
27012	27012-0098	HOOK		1
27012A	27012-1316	HOOK,BATTERY CASE		2
35019	35019-0048	FLAP,RR FENDER		1
35023	35023-0077	FENDER-REAR,FR		1
35023A	35023-0105	FENDER-REAR,RR		1
53044	53044-0021	TRIM,L=20		4
55020	55020-0220	GUARD,HEAT		1
92009	92009-3845	SCREW,6X14		2
92015	92015-1094	NUT,6MM		6
92015A	92015-1757	NUT,WELL,5MM		1
92039	92039-1283	RIVET		1
92075	92075-1967	DAMPER		2
92153	92153-1244	BOLT,SOCKET,5X16		1
120	120S0620	BOLT-SOCKET,6X20		2
130	130J0616	BOLT-FLANGED,6X16		5

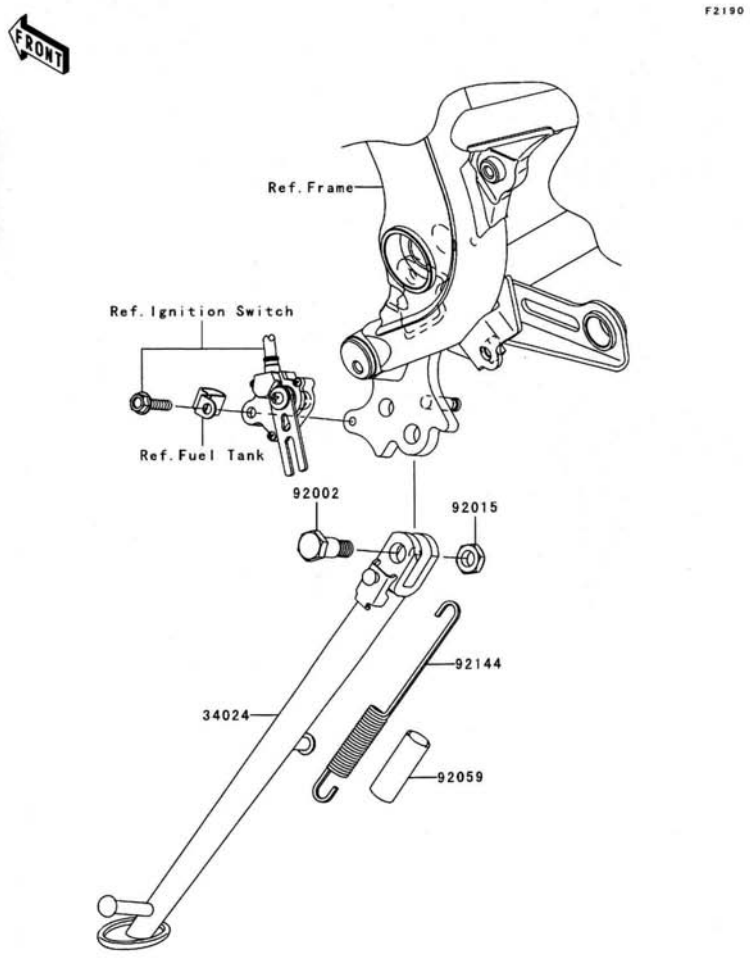

Ref. No.	Part No.	Description	Spec Code	Quantity-KLE650 '07 A7F				
34024	34024-0030	STAND-SIDE		1				
92002	92002-1935	BOLT,SIDE STAND		1				
92015	92015-1188	NUT,LOCK,10MM,BLACK		1				
92059	92059-1961	TUBE,14X17X50		1				
92144	92144-1818	SPRING,SIDE STAND		1				

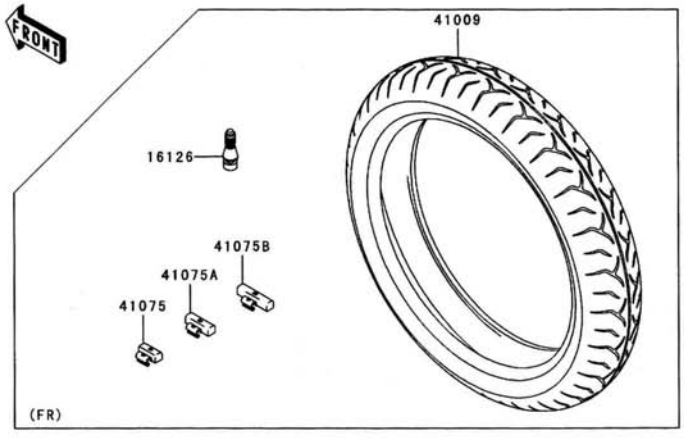

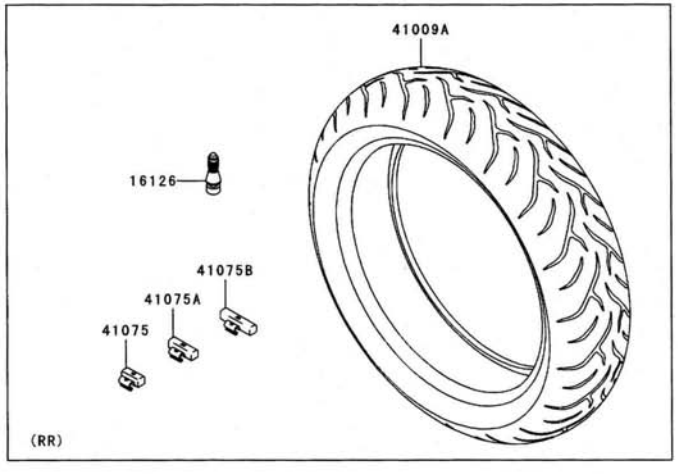

F2210

Ref. No.	Part No.	Description	Spec Code	Quantity-KLE650 '07 A7F				
16126	16126-1140	VALVE,TIRE		2				
41009	41009-0128	TIRE,FR,120/70ZR17(58W),D221FAG		1				
41009A	41009-0129	TIRE,RR,160/60ZR17(69W),D221G		1				
41075	41075-0007	BALANCER-WHEEL,10G,SILVER		AR				
41075A	41075-0008	BALANCER-WHEEL,20G,SILVER		AR				
41075B	41075-0009	BALANCER-WHEEL,30G,SILVER		AR				

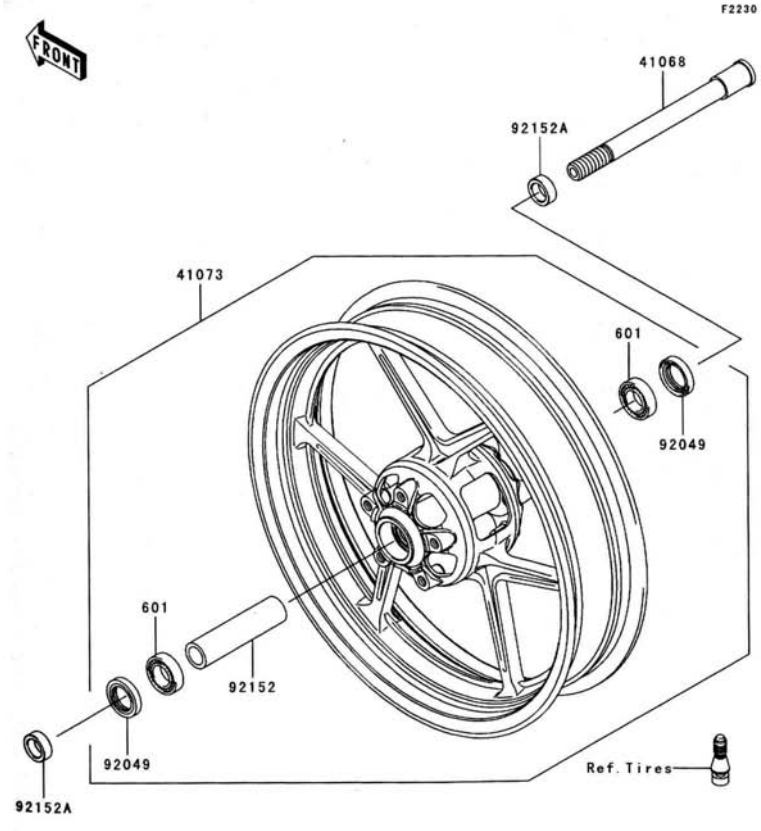

Ref. No.	Part No.	Description	Spec Code	Quantity-KLE650 '07 A7F
41068	41068-0038	AXLE,FR		1
41073	41073-0053-795	WHEEL-ASSY,FR,M.F.P.SILVER		1
92049	92049-1057	SEAL-OIL,BJN30427-C3		2
92152	92152-0087	COLLAR,FR HUB,L=115		1
92152A	92152-0420	COLLAR,FR AXLE,L=11		2
601	601B6004UU	BEARING-BALL,#6004UUC3		2

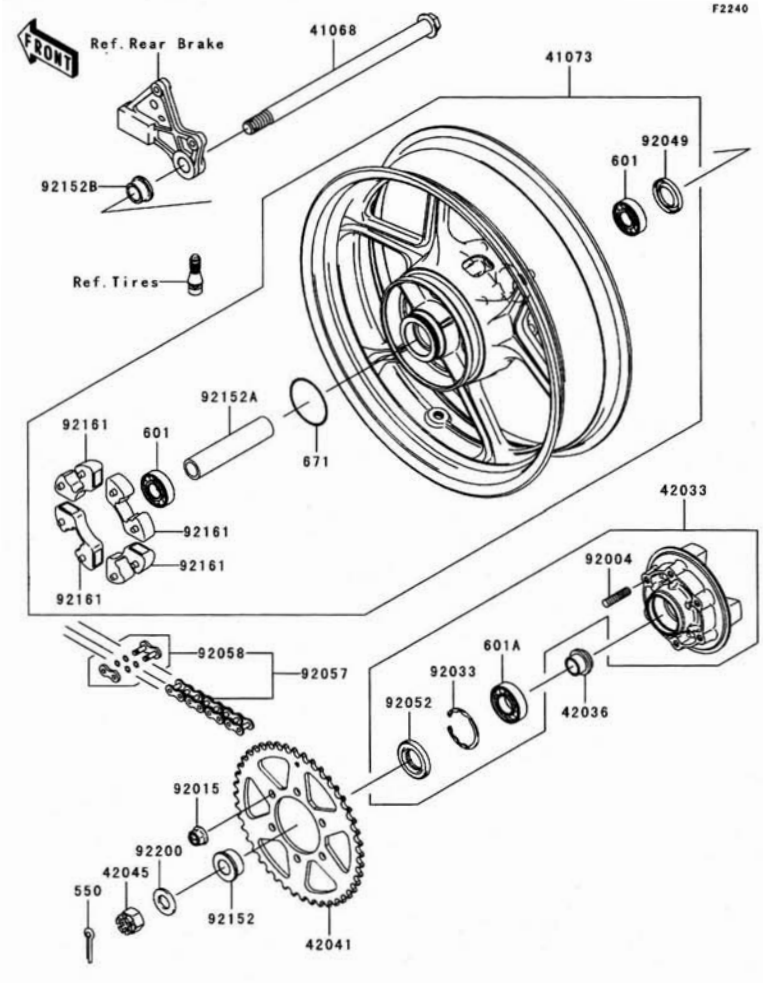

Ref. No.	Part No.	Description	Spec Code	Quantity-KLE650 '07	A7F
41068	41068-0054	AXLE,RR		1	
41073	41073-0051-795	WHEEL-ASSY,RR,M.F.P.SILVER		1	
42033	42033-0003	COUPLING-ASSY,RR HUB		1	
42036	42036-1251	SLEEVE,RR HUB,L=23		1	
42041	42041-0020	SPROCKET-HUB,46T		1	
42045	42045-018	NUT,CASTLE,18MM		1	
92004	92004-1275	STUD,10X19		6	
92015	92015-1335	NUT,FLANGED,10MM		6	
92033	92033-1043	RING-SNAP,52MM		1	
92049	92049-1056	SEAL-OIL,BJN28475		1	
92052	92052-006	SEAL-OIL,TWC35527		1	
92057	92057-0101	CHAIN,DRIVE,EK520MVXL1X114L		1	
92058	92058-0007	JOINT-CHAIN,DRIVE		1	
92152	92152-0118	COLLAR,RR AXLE,LH,L=18		1	
92152A	92152-0301	COLLAR,RR HUB,L=133		1	
92152B	92152-0302	COLLAR,RR AXLE,RH,L=17		1	
92161	92161-0303	DAMPER,SHOCK,RR HUB		4	
92200	92200-0296	WASHER,19X36X3.2		1	
550	550D4035	PIN-COTTER,4.0X35		1	
601	601B6204UU	BEARING-BALL,6204UUC3		2	
601A	601B6205UU	BEARING-BALL		1	
671	671B2560	O RING,60MM		1	

This catalog covers:

’07 KLE650 A7F Chassis

GRID NO. **F-3**

This grid covers:

Brake Pedal

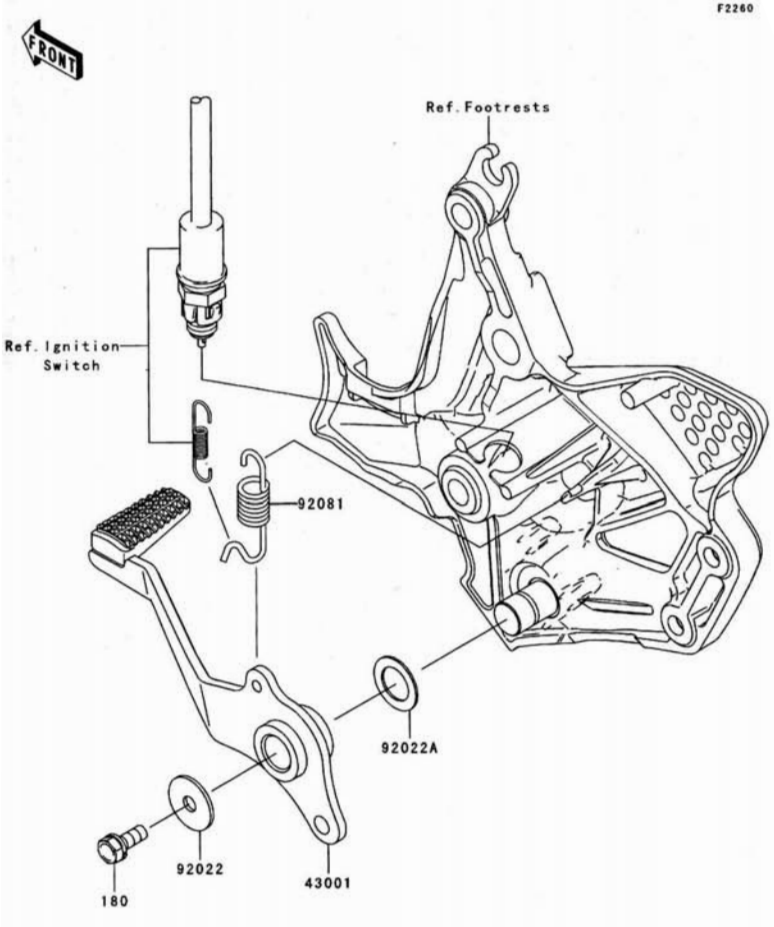

Ref. No.	Part No.	Description	Spec Code	Quantity-KLE650 ’07 A7F				
43001	43001-0084	LEVER-BRAKE,PEDAL		1				
92022	92022-228	WASHER,7X24X1.6		1				
92022A	92022-326	WASHER,15.3X24X1		1				
92081	92081-1833	SPRING,BRAKE PEDAL		1				
180	180D0616	BOLT-UPSET-WS,6X16		1				

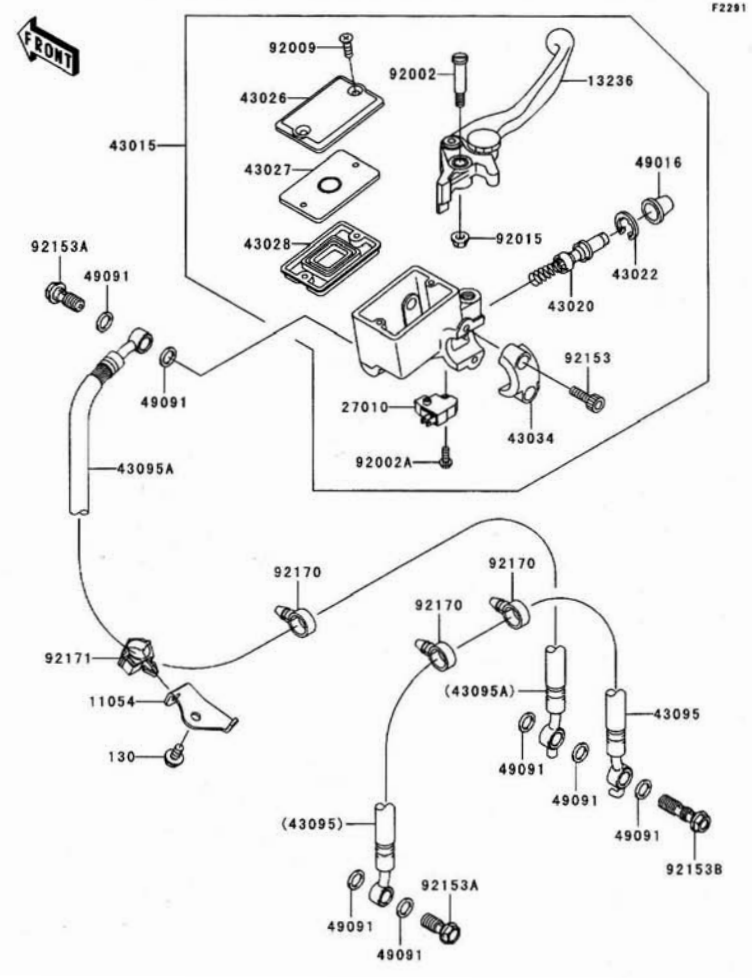

Ref. No.	Part No.	Description	Spec Code	Quantity-KLE650 '07	A7F
11054	11054-1654	BRACKET,BRAKE HOSE		1	
13236	13236-1337	LEVER-COMP,FRONT BRAKE		1	
27010	27010-0025	SWITCH,BRAKE		1	
43015	43015-0011	CYLINDER-ASSY-MASTER,FR		1	
43020	43020-1054	PISTON-COMP-BRAKE,FR		1	
43022	43022-1010	STOPPER-BRAKE,PISTON		1	
43026	43026-1076	CAP-BRAKE		1	
43027	43027-1055	PLATE-DIAPHRAGM		1	
43028	43028-1058	DIAPHRAGM,MASTER CYLINDER		1	
43034	43034-1053	HOLDER-BRAKE,MASTER CYLINDER		1	
43095	43095-0211	HOSE-BRAKE,FR		1	
43095A	43095-0328	HOSE-BRAKE,FR		1	
49016	49016-1044	COVER-SEAL,MASTER CYLINDER		1	
49091	49091-0001	WASHER-SEAL,10.1X14.5X1.5		7	
92002	92002-1322	BOLT,LEVER SET,BLACK		1	
92002A	92002-1323	BOLT,SCREW,4X12		1	
92009	92009-1458	SCREW,4MM		2	
92015	92015-1233	NUT,FLANGED,6MM,BLACK		1	
92153	92153-0417	BOLT,SOCKET,6X20		2	
92153A	92153-0627	BOLT,OIL,L=23		2	
92153B	92153-0628	BOLT,OIL,L=37		1	
92170	92170-1067	CLAMP		3	
92171	92171-0316	CLAMP,BRAKE HOSE		1	
130	130L0614	BOLT-FLANGED,6X14		1	

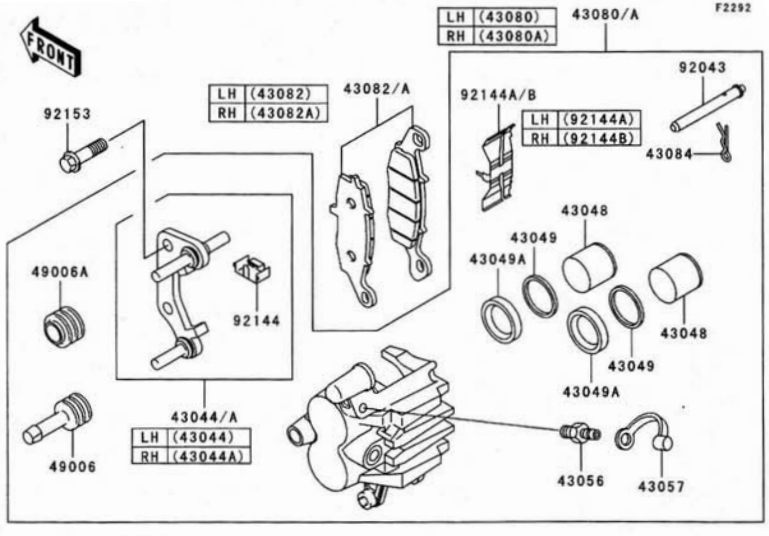

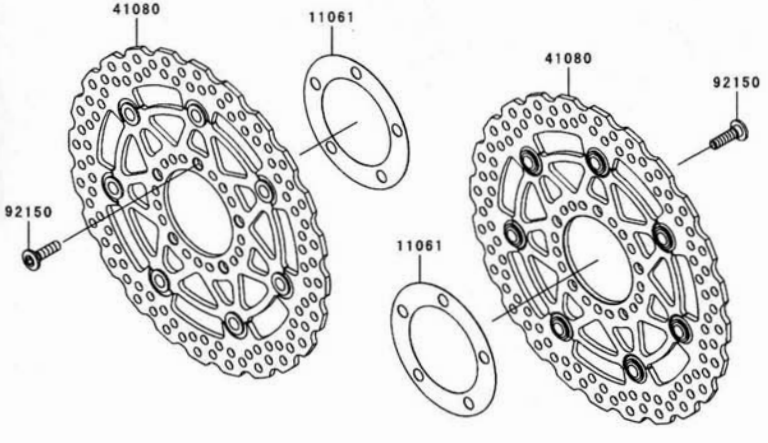

Ref. No.	Part No.	Description	Spec Code	Quantity-KLE650 '07 A7F
11061	11061-0029	GASKET,DISC PLATE		2
41080	41080-0104-11I	DISC,FR,BLACK+DISC SILVER		2
43044	43044-1115	HOLDER-COMP-CALIPER,FR,LH		1
43044A	43044-1116	HOLDER-COMP-CALIPER,FR,RH		1
43048	43048-1073	PISTON-CALIPER		4
43049	43049-1068	PACKING		4
43049A	43049-1092	PACKING,PISTON SEAL		4
43056	43056-1054	BREATHER-BRAKE		2
43057	43057-003	CAP-BREATHER		2
43080	43080-5017-DJ	CALIPER-SUB-ASSY,FR,LH,BLACK		1
43080A	43080-5028-DJ	CALIPER-SUB-ASSY,FR,RH,BLACK		1
43082	43082-0050	PAD-ASSY-BRAKE,LH		1
43082A	43082-0051	PAD-ASSY-BRAKE,RH		1
43084	43084-003	CLAMP,PAD		2
49006	49006-1054	BOOT,CALIPER		2
49006A	49006-1095	BOOT,CALIPER		2
92043	92043-1489	PIN,PAD		2
92144	92144-1831	SPRING,STOPPER		2
92144A	92144-1832	SPRING,PAD,LH		1
92144B	92144-1844	SPRING,PAD,RH		1
92150	92150-1771	BOLT,SOCKET,8X30		10
92153	92153-1680	BOLT,FLANGED,10X35		4

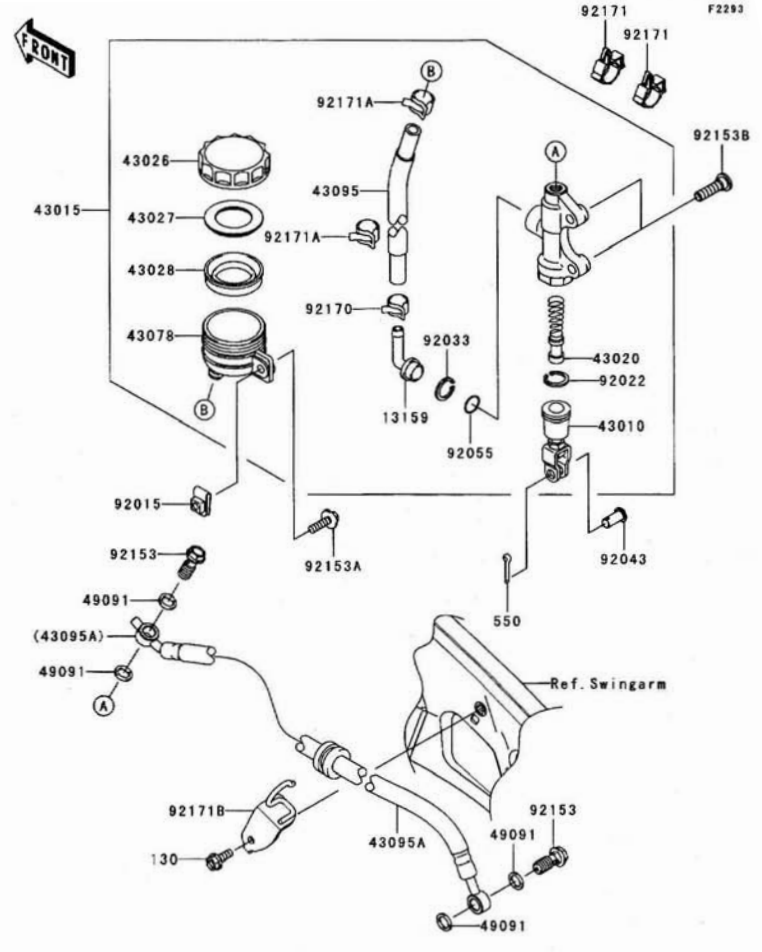

Ref. No.	Part No.	Description	Spec Code	Quantity-KLE650 '07	A7F
13159	13159-1056	CONNECTOR		1	
43010	43010-1074	ROD-ASSY-BRAKE		1	
43015	43015-0068	CYLINDER-ASSY-MASTER,RR		1	
43020	43020-1094	PISTON-COMP-BRAKE		1	
43026	43026-1051	CAP-BRAKE		1	
43027	43027-1051	PLATE-DIAPHRAGM		1	
43028	43028-1057	DIAPHRAGM,MASTER CYLINDER		1	
43078	43078-1082	RESERVOIR,RR MASTER CYLINDER		1	
43095	43095-0193	HOSE-BRAKE,RR MASTER CYLINDER		1	
43095A	43095-0254	HOSE-BRAKE,RR		1	
49091	49091-0001	WASHER-SEAL,10.1X14.5X1.5		4	
92015	92015-1602	NUT,6MM		1	
92022	92022-1601	WASHER,CIRCRIP		1	
92033	92033-1186	RING-SNAP,20.5MM		1	
92043	92043-0104	PIN,8X14.5		1	
92055	92055-1251	RING-O,MASTER CYLINDER		1	
92153	92153-0627	BOLT,OIL,L=23		2	
92153A	92153-0725	BOLT,6X22		1	
92153B	92153-1624	BOLT,SOCKET,8X30		2	
92170	92170-1091	CLAMP,HOSE		1	
92171	92171-0316	CLAMP,BRAKE HOSE		2	
92171A	92171-0463	CLAMP,HOSE		2	
92171B	92171-0825	CLAMP,BRAKE HOSE		1	
130	130L0616	BOLT-FLANGED,6X16		1	
550	550D2015	PIN-COTTER,2.0X15		1	

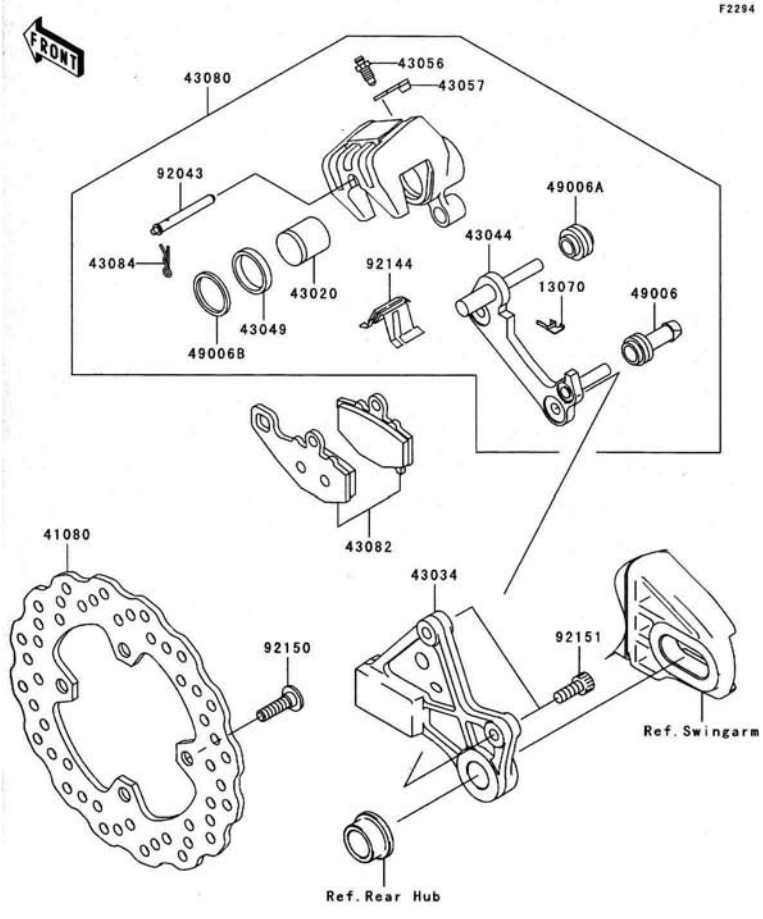

Ref. No.	Part No.	Description	Spec Code	Quantity-KLE650 '07 A7F
13070	13070-0045	GUIDE,BRAKE PAD		1
41080	41080-0040	DISC,RR		1
43020	43020-1119	PISTON-COMP-BRAKE		1
43034	43034-0004	HOLDER-BRAKE,REAR CALIPER		1
43044	43044-1110	HOLDER-COMP-CALIPER,RR		1
43049	43049-1097	PACKING,PISTON SEAL		1
43056	43056-1054	BREATHER-BRAKE		1
43057	43057-003	CAP-BREATHER		1
43080	43080-5061-DJ	CALIPER-SUB-ASSY,RR,BLACK		1
43082	43082-1213	PAD-ASSY-BRAKE		1
43084	43084-003	CLAMP,PAD		1
49006	49006-1054	BOOT,CALIPER		1
49006A	49006-1095	BOOT,CALIPER		1
49006B	49006-1212	BOOT,PISTON SEAL		1
92043	92043-1489	PIN,PAD		1
92144	92144-1719	SPRING,PAD		1
92150	92150-1771	BOLT,SOCKET,8X30		4
92151	92151-1289	BOLT,SOCKET,8X20		2

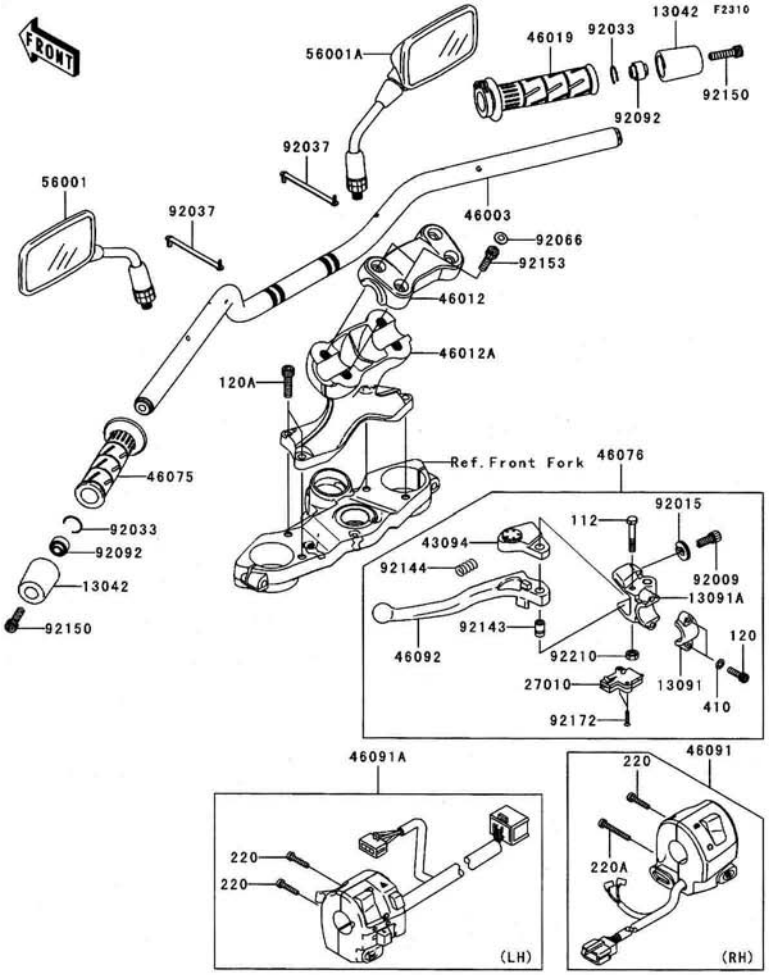

Ref. No.	Part No.	Description	Spec Code	Quantity-KLE650 '07 A7F				
13042	13042-1006	WEIGHT,HANDLE		2				
13091	13091-1624	HOLDER,CLUTCH LEVER		1				
13091A	13091-1652	HOLDER,CLUTCH LEVER		1				
27010	27010-1094	SWITCH,CLUTCH,BLACK		1				
43094	43094-1053	ADJUSTER,CLUTCH LEVER		1				
46003	46003-0120-10T	HANDLE,F.P.SILVER		1				
46012	46012-0029-458	HOLDER-HANDLE,UPP,P.SILVER		1				
46012A	46012-0030-458	HOLDER-HANDLE,LWR,P.SILVER		1				
46019	46019-0001	GRIP-ASSY,THROTTLE		1				
46075	46075-1144	GRIP,LH		1				
46076	46076-1180	LEVER-ASSY-GRIP,CLUTCH		1				
46091	46091-0088	HOUSING-ASSY-CONTROL,RH		1				
46091A	46091-0089	HOUSING-ASSY-CONTROL,LH		1				
46092	46092-1162	LEVER-GRIP,CLUTCH		1				
56001	56001-0051	MIRROR-ASSY,LH		1				
56001A	56001-0052	MIRROR-ASSY,RH		1				
92009	92009-1134	SCREW,CABLE ADJUST,8MM,BLACK		1				
92015	92015-1197	NUT,CABLE ADJUST LOCK,8MM,BLK		1				
92033	92033-1102	RING-SNAP,OD=22.2		2				
92037	92037-1903	CLAMP,SPEED,L=80.5		2				
92066	92066-1281	PLUG		4				
92092	92092-1018	BUSHING-RUBBER,HANDLE		2				
92143	92143-1379	COLLAR		1				
92144	92144-1467	SPRING		1				
92150	92150-1604	BOLT,SOCKET,8X30		2				
92153	92153-0513	BOLT,SOCKET,8X30		4				
92172	92172-0183	SCREW,3X16		2				
92210	92210-0006	NUT,LOCK,6MM		1				
112	112C0640	BOLT-UPSET,6X40		1				
120	120S0620	BOLT-SOCKET,6X20		2				
120A	120S0830	BOLT-SOCKET,8X30		4				
220	220C0525	SCREW-PAN-CROS,5X25		3				
220A	220C0540	SCREW-PAN-CROS,5X40		1				
410	410F0600	WASHER-PLAIN-SMALL,6MM,BLACK		2				

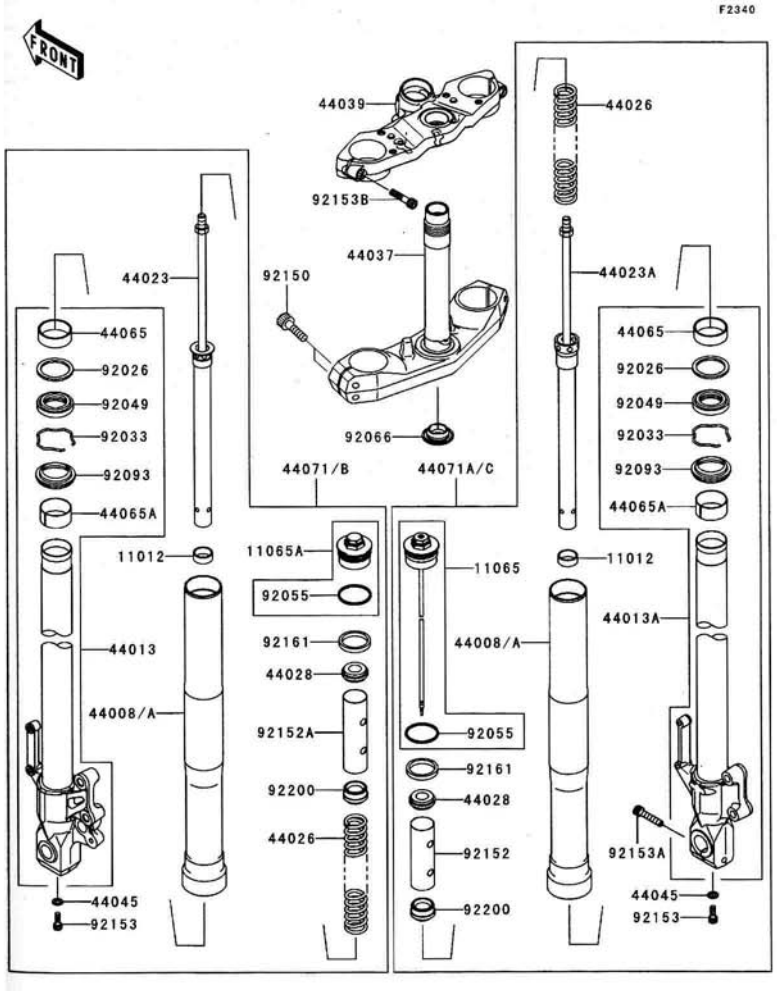

Ref. No.	Part No.	Description	Spec Code	Quantity-KLE650 '07 A7F				
11012	11012-1761	CAP		2				
11065	11065-0196	CAP,FORK BOLT COMP,RH		1				
11065A	11065-0197	CAP,FORK BOLT COMP,LH		1				
44008	44008-0037-KX	PIPE-FORK OUTER,SILVER		2				
44008A	44008-0037-499	PIPE-FORK OUTER,A.BLACK		2				
44013	44013-0064-21	PIPE-FORK INNER,LH,F.BLACK		1				
44013A	44013-0065-21	PIPE-FORK INNER,RH,F.BLACK		1				
44023	44023-0048	CYLINDER-SET-FORK,LH		1				
44023A	44023-0049	CYLINDER-SET-FORK,RH		1				
44026	44026-0097	SPRING-FRONT FORK		2				
44028	44028-1083	GUIDE-FORK SPRING		2				
44037	44037-0053	HOLDER-FORK UNDER		1				
44039	44039-0064-458	HOLDER-FORK UPPER,P.SILVER		1				
44045	44045-051	GASKET,FORK CYLINDER BOLT		2				
44065	44065-0001	BUSHING-FRONT FORK,GUIDE		2				
44065A	44065-0002	BUSHING-FRONT FORK,SLIDE		2				
44071	44071-5030	DAMPER-ASSY,FORK,LH		1				
44071A	44071-5031	DAMPER-ASSY,FORK,RH		1				
44071B	44071-5032	DAMPER-ASSY,FORK,LH		1				
44071C	44071-5033	DAMPER-ASSY,FORK,RH		1				
92026	92026-1276	SPACER,FORK OUTER		2				
92033	92033-1222	RING-SNAP		2				
92049	92049-0058	SEAL-OIL		2				
92055	92055-0131	RING-O		2				
92066	92066-0032	PLUG		1				
92093	92093-0035	SEAL,DUST		2				
92150	92150-1511	BOLT,SOCKET		4				
92152	92152-0497	COLLAR,FORK,L=100		1				
92152A	92152-0498	COLLAR,FORK,L=117.5		1				
92153	92153-0028	BOLT,SOCKET,8X22		2				
92153A	92153-0536	BOLT,SOCKET,8X40		1				
92153B	92153-0537	BOLT,SOCKET		2				
92161	92161-0468	DAMPER		2				
92200	92200-1464	WASHER		2				

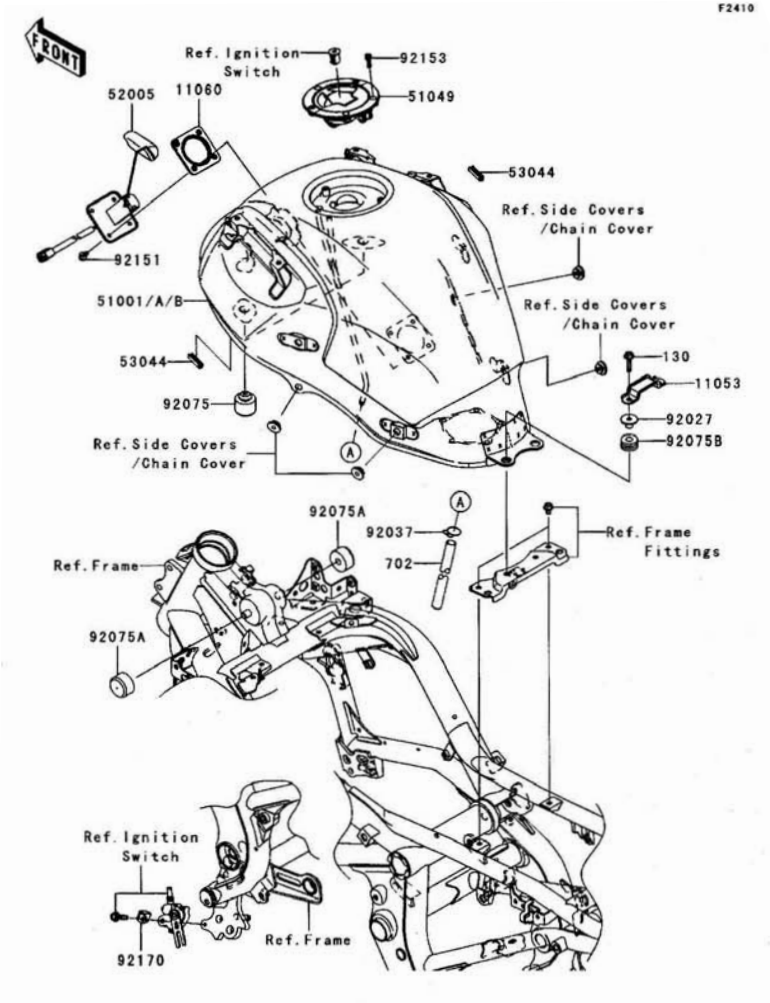

Ref. No.	Part No.	Description	Spec Code	Quantity-KLE650 '07 A7F				
11053	11053-1812	BRACKET,SEAT		1				
11060	11060-1952	GASKET,FUEL GAUGE		1				
51001	51001-0117-H8	TANK-COMP-FUEL,EBONY		1				
51001A	51001-0117-17L	TANK-COMP-FUEL,C.ORANGE		1				
51001B	51001-0117-17M	TANK-COMP-FUEL,SILVER		1				
51049	51049-0012	CAP-TANK,FUEL		1				
52005	52005-0023	GAUGE,FUEL		1				
53044	53044-0001	TRIM,L=30		2				
92027	92027-251	COLLAR,L=13.1		2				
92037	92037-010	CLAMP,TUBE		1				
92075	92075-1002	DAMPER		2				
92075A	92075-125	DAMPER,FUEL TANK		2				
92075B	92075-1690	DAMPER		2				
92151	92151-1599	BOLT,5X12		4				
92153	92153-1616	BOLT,SOCKET,5X16		3				
92170	92170-1833	CLAMP		1				
130	130L0625	BOLT-FLANGED,6X25		2				
702	702A06750	TUBE-RUBBER,6X9X750		1				

This catalog covers:

’07 KLE650 A7F Chassis

GRID NO. **F-11**

This grid covers:

Seat

F2510

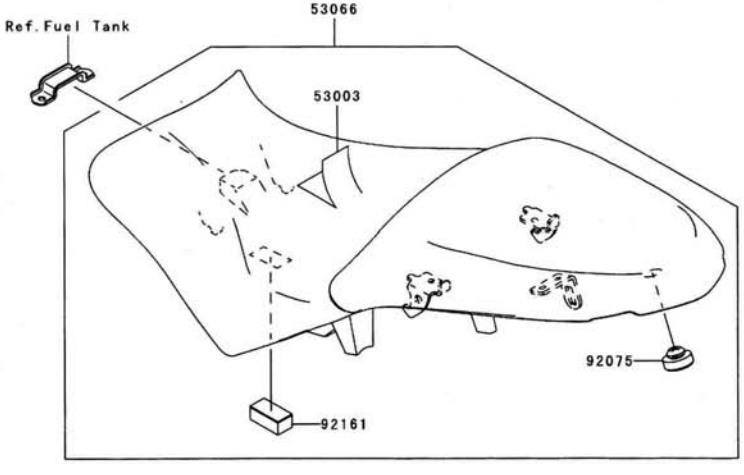

Ref. No.	Part No.	Description	Spec Code	Quantity-KLE650				
				’07				
				A7F				
53003	53003-0090-MA	LEATHER,SEAT,BLACK		1				
53066	53066-0143-MA	SEAT-ASSY,DUAL,BLACK		1				
92075	92075-1045	DAMPER		1				
92161	92161-1321	DAMPER,SEAT		1				

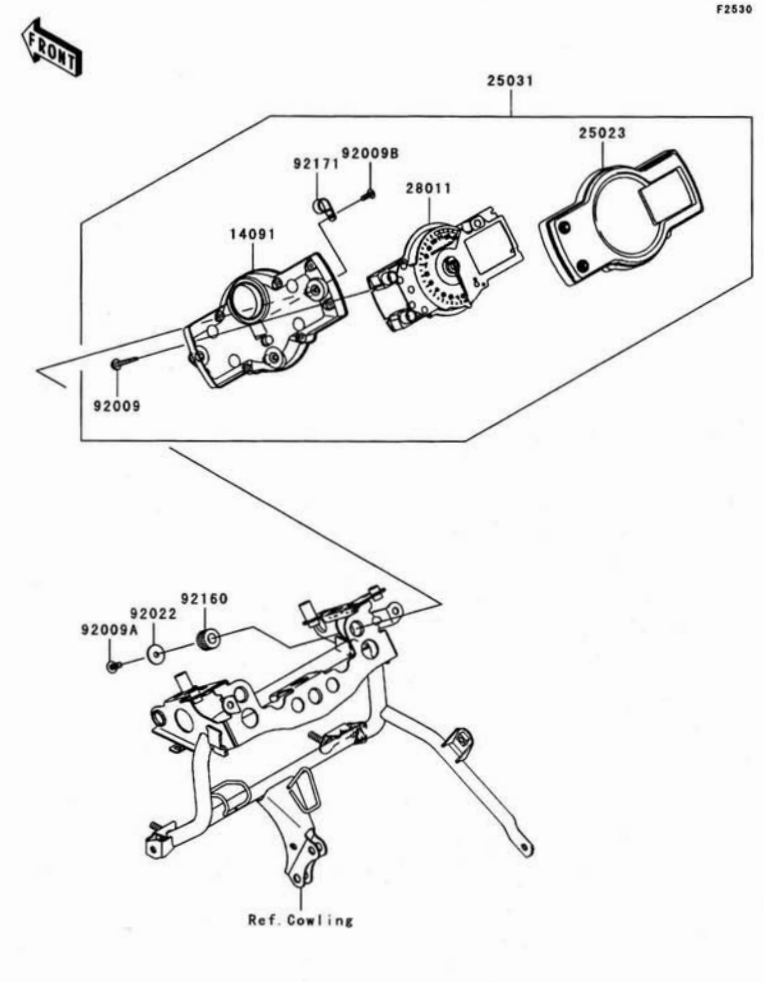

Ref. No.	Part No.	Description	Spec Code	Quantity-KLE650 '07 A7F
14091	14091-0650	COVER,METER,LWR		1
25023	25023-0023	COVER-METER CASE,UPP		1
25031	25031-0129	METER-ASSY,TACHO&LCD		1
28011	28011-0063	METER,TACHO&LCD		1
92009	92009-1164	SCREW,TAPPING,3X16		9
92009A	92009-1197	SCREW,TAPPING,5X14		3
92009B	92009-1503	SCREW,TAPPING,4X14		1
92022	92022-1405	WASHER,5.5X20X1.2		3
92160	92160-1167	DAMPER		3
92171	92171-0875	CLAMP		1

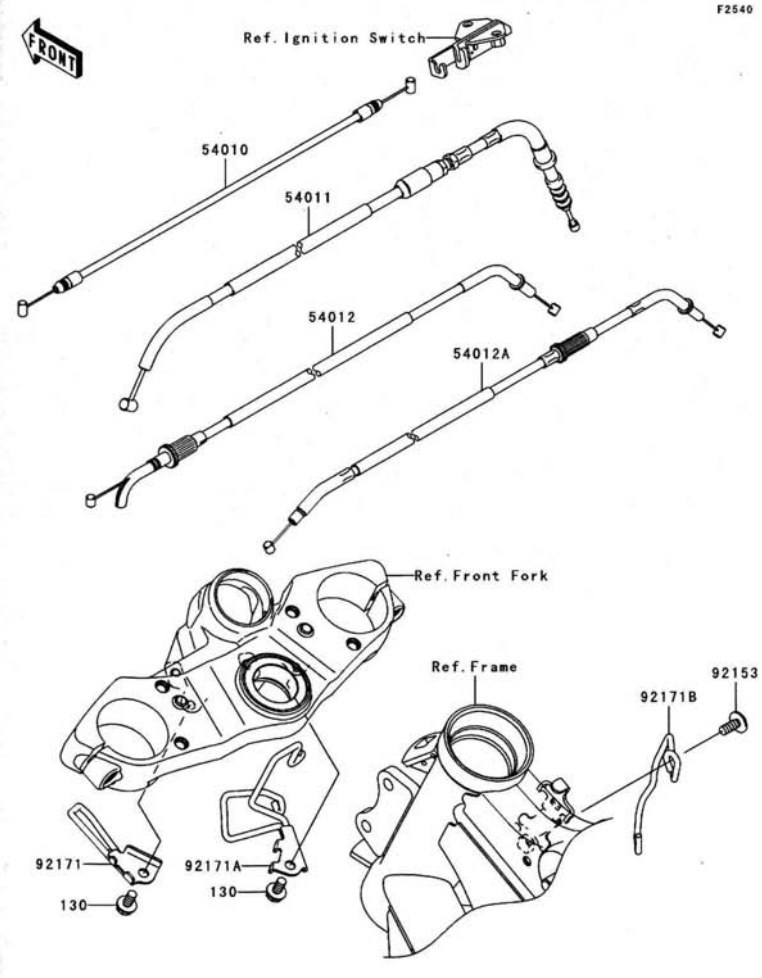

Ref. No.	Part No.	Description	Spec Code	Quantity-KLE650 '07 A7F			
54010	54010-0029	CABLE,SEAT LOCK		1			
54011	54011-0058	CABLE-CLUTCH		1			
54012	54012-0208	CABLE-THROTTLE,OPENING		1			
54012A	54012-0209	CABLE-THROTTLE,CLOSING		1			
92153	92153-1446	BOLT,SOCKET,6X14		1			
92171	92171-0882	CLAMP,CABLE		1			
92171A	92171-0883	CLAMP,CABLE		1			
92171B	92171-0894	CLAMP,CABLE		1			
130	130L0614	BOLT-FLANGED,6X14		2			

This catalog covers:

’07 KLE650 A7F Chassis

GRID NO. **F-14**

This grid covers:

Side Covers/Chain Cover

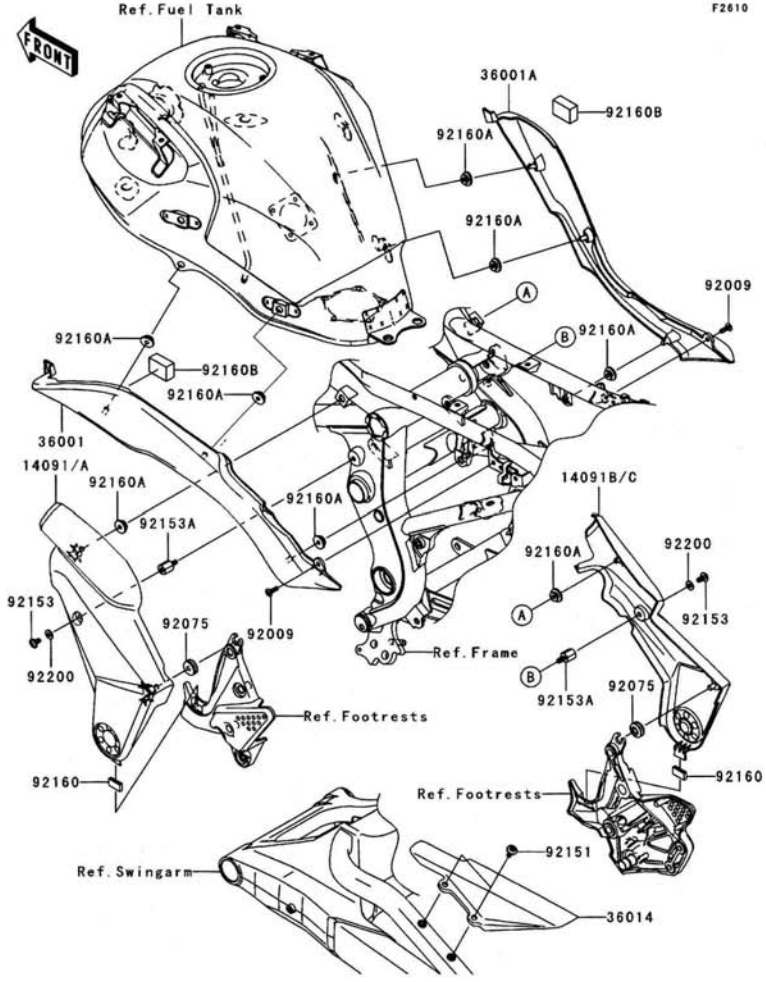

Ref. No.	Part No.	Description	Spec Code	Quantity-KLE650 '07 A7F				
14091	14091-0739-11J	COVER,PIVOT,LH,F.S.BLACK		1				
14091A	14091-0739-458	COVER,PIVOT,LH,P.SILVER		1				
14091B	14091-0740-11J	COVER,PIVOT,RH,F.S.BLACK		1				
14091C	14091-0740-458	COVER,PIVOT,RH,P.SILVER		1				
36001	36001-0096-6Z	COVER-SIDE,LH,F.BLACK		1				
36001A	36001-0097-6Z	COVER-SIDE,RH,F.BLACK		1				
36014	36014-0018	CASE-CHAIN,RR		1				
92009	92009-1909	SCREW,5X16		2				
92075	92075-1067	DAMPER		2				
92151	92151-1654	BOLT,SOCKET,6X14		2				
92153	92153-1275	BOLT,SOCKET,6X12		2				
92153A	92153-1661	BOLT,6MM		2				
92160	92160-1190	DAMPER		2				
92160A	92160-1613	DAMPER		8				
92160B	92160-1769	DAMPER		2				
92200	92200-1388	WASHER,6.5X14X1		2				

This catalog covers:

’07 KLE650 A7F Chassis

GRID NO. **G-3**

This grid covers:

Seat Cover

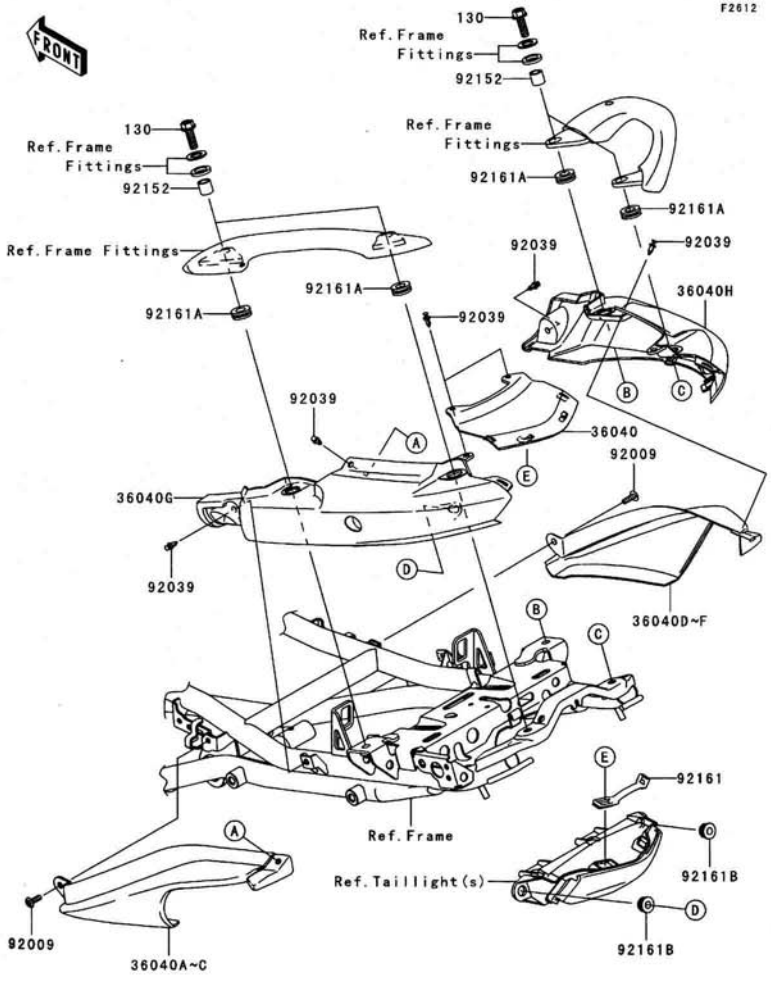

Ref. No.	Part No.	Description	Spec Code	Quantity-KLE650 ’07 A7F				
36040	36040-0052-6Z	COVER-TAIL,CNT,F.BLACK		1				
36040A	36040-0064-H8	COVER-TAIL,FR,LH,EBONY		1				
36040B	36040-0064-17L	COVER-TAIL,FR,LH,C.ORANGE		1				
36040C	36040-0064-17M	COVER-TAIL,FR,LH,SILVER		1				
36040D	36040-0065-H8	COVER-TAIL,FR,RH,EBONY		1				
36040E	36040-0065-17L	COVER-TAIL,FR,RH,C.ORANGE		1				
36040F	36040-0065-17M	COVER-TAIL,FR,RH,SILVER		1				
36040G	36040-0069-6Z	COVER-TAIL,RR,LH,F.BLACK		1				
36040H	36040-0070-6Z	COVER-TAIL,RR,RH,F.BLACK		1				
92009	92009-1909	SCREW,5X16		2				
92039	92039-0023	RIVET		6				
92152	92152-0546	COLLAR,9.2X13.8X12.5		4				
92161	92161-0191	DAMPER,TAIL LAMP		1				
92161A	92161-0279	DAMPER		4				
92161B	92161-0317	DAMPER		2				
130	130S0825	BOLT-FLANGED,8X25		4				

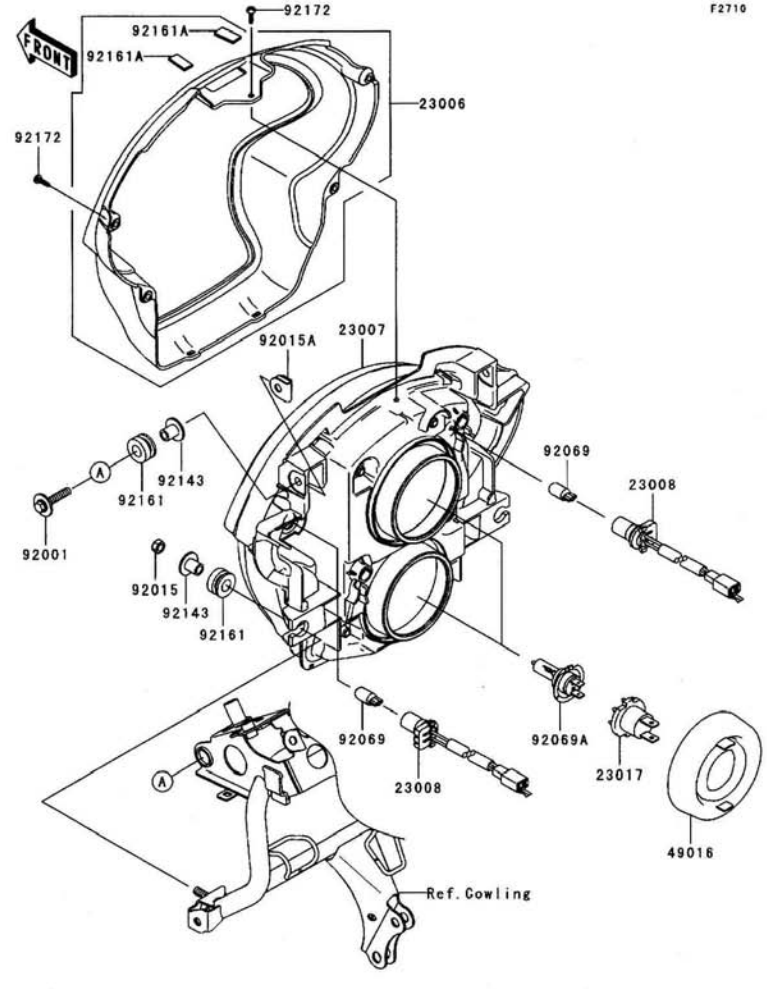

Ref. No.	Part No.	Description	Spec Code	Quantity-KLE650 '07 A7F				
23006	23006-0011	RIM-LAMP		1				
23007	23007-0077	LENS-COMP,HEAD LAMP		1				
23008	23008-1619	SOCKET-ASSY,HEAD LAMP		2				
23017	23017-1067	SOCKET,HEAD LAMP		2				
49016	49016-1193	COVER-SEAL,HEAD LAMP		2				
92001	92001-1776	BOLT,6X30		2				
92015	92015-1386	NUT,6MM		2				
92015A	92015-1904	NUT,CLIP,6MM		2				
92069	92069-1016	BULB,12V 5W		2				
92069A	92069-1126	BULB,12V 55W,H7		2				
92143	92143-1353	COLLAR		4				
92161	92161-0036	DAMPER		4				
92161A	92161-0479	DAMPER		2				
92172	92172-0233	SCREW		5				

This catalog covers:

’07 KLE650 A7F Chassis

GRID NO. **G-5**

This grid covers:

Taillight(s)

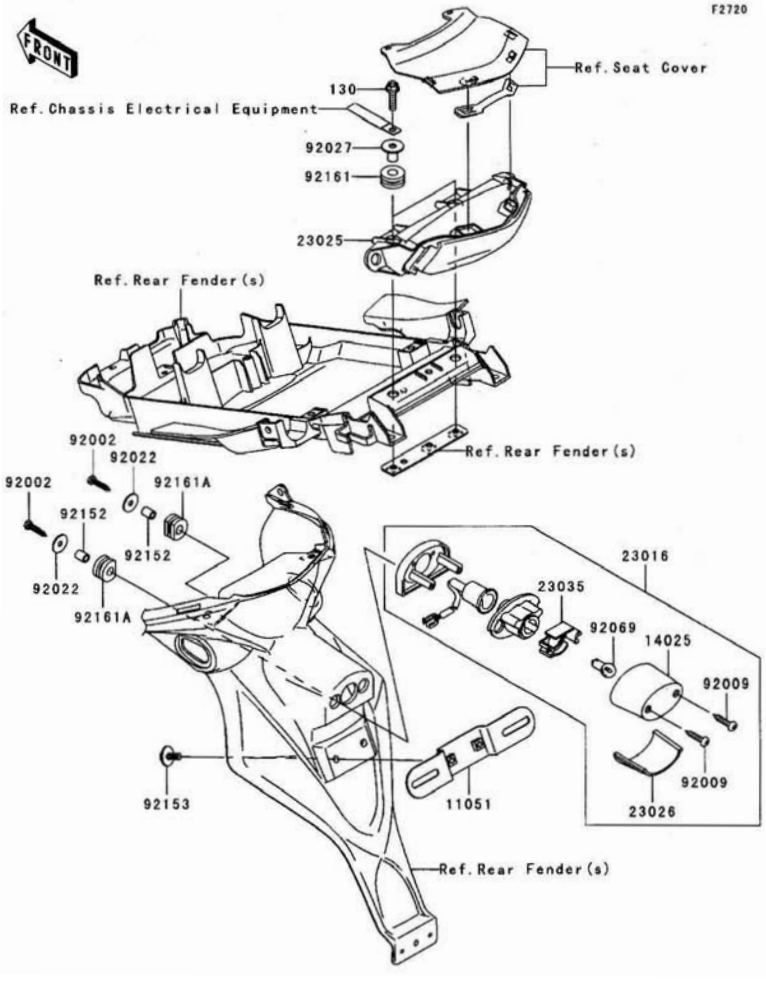

Ref. No.	Part No.	Description	Spec Code	Quantity-KLE650 ’07 A7F
11051	11051-1503	BRACKET,LICENSE		1
14025	14025-1725	COVER,LICENSE LAMP		1
23016	23016-0003	LAMP-ASSY,LICENSE		1
23025	23025-0047	LAMP-TAIL		1
23026	23026-1064	LENS,LICENSE LAMP		1
23035	23035-1066	REFLECTOR-LAMP,LICENSE		1
92002	92002-1831	BOLT,TAPPING,5X25		2
92009	92009-1378	SCREW,TAPPING,4X20		2
92022	92022-1581	WASHER,5.5X20X1.2		2
92027	92027-1847	COLLAR,L=16.1		2
92069	92069-1055	BULB,12V 5W		1
92152	92152-1458	COLLAR,6X9X11.5		2
92153	92153-0684	BOLT,6X16		2
92161	92161-0163	DAMPER		2
92161A	92161-1313	DAMPER		2
130	130J0625	BOLT-FLANGED,6X25		2

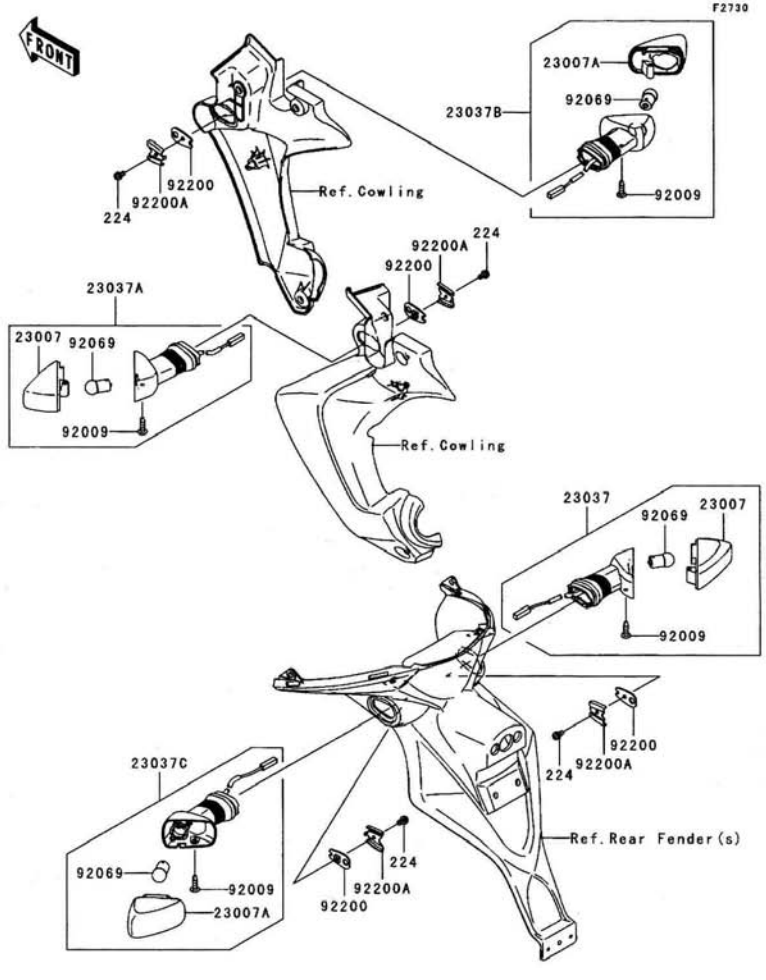

Ref. No.	Part No.	Description	Spec Code	Quantity-KLE650 '07 A7F
23007	23007-0039	LENS-COMP,SIGNAL LAMP		2
23007A	23007-0040	LENS-COMP,SIGNAL LAMP		2
23037	23037-0061	LAMP-ASSY-SIGNAL,RR,RH		1
23037A	23037-0068	LAMP-ASSY-SIGNAL,FR,LH		1
23037B	23037-0069	LAMP-ASSY-SIGNAL,FR,RH		1
23037C	23037-0102	LAMP-ASSY-SIGNAL,RR,LH		1
92009	92009-1158	SCREW,4X16,BLACK		4
92069	92069-0003	BULB,12V 10W		4
92200	92200-0164	WASHER,SIGNAL LAMP		4
92200A	92200-0165	WASHER,SIGNAL LAMP		4
224	224C0408	SCREW-PAN-WP-CROS,4X8		4

This catalog covers:

’07 KLE650 A7F Chassis

GRID NO. **G-7**

This grid covers:

Chassis Electrical Equipment

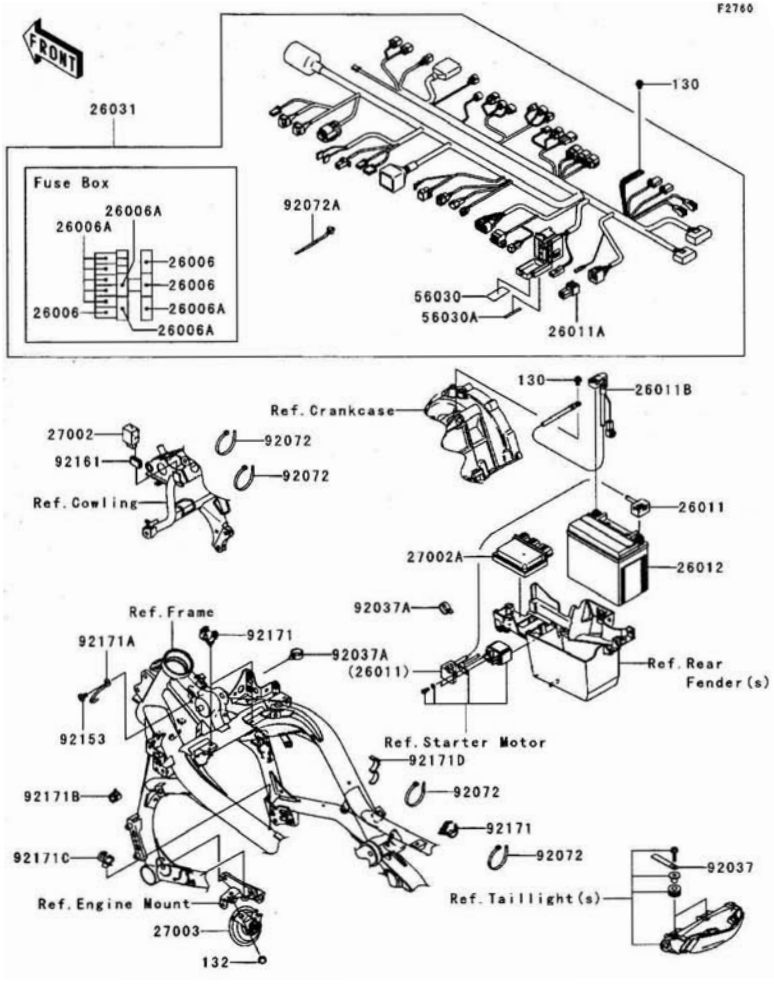

Ref. No.	Part No.	Description	Spec Code	Quantity-KLE650 ’07 A7F				
26006	26006-0001	FUSE,15A		3				
26006A	26006-1078	FUSE,10A		8				
26011	26011-0073	WIRE-LEAD,BATTERY(+)		1				
26011A	26011-0082	WIRE-LEAD		1				
26011B	26011-0099	WIRE-LEAD,BATTERY(-)		1				
26012	26012-1330	BATTERY,YTX12-BS,12V 10AH		1				
26031	26031-0534	HARNESS,MAIN		1				
27002	27002-0006	RELAY-ASSY,SIGNAL LAMP		1				
27002A	27002-0007	RELAY-ASSY		1				
27003	27003-0040	HORN		1				
56030	56030-0046	LABEL,FUSE BOX		1				
56030A	56030-0098	LABEL,FUSE BOX		1				
92037	92037-1069	CLAMP,L=60		2				
92037A	92037-1827	CLAMP,HOSE		2				
92072	92072-1195	BAND,L=202		4				
92072A	92072-1414	BAND		11				
92153	92153-1446	BOLT,SOCKET,6X14		1				
92161	92161-0283	DAMPER,SIGNAL RELAY		1				
92171	92171-0069	CLAMP,DIA=20		3				
92171A	92171-0657	CLAMP,HARNESS		1				
92171B	92171-1415	CLAMP,DIA=13		1				
92171C	92171-1424	CLAMP,DIA=15		1				
92171D	92171-1559	CLAMP,DIA=25		1				
130	130V0610	BOLT-FLANGED,6X10		2				
132	132L0812	BOLT-FLANGED-SMALL,8X12		1				

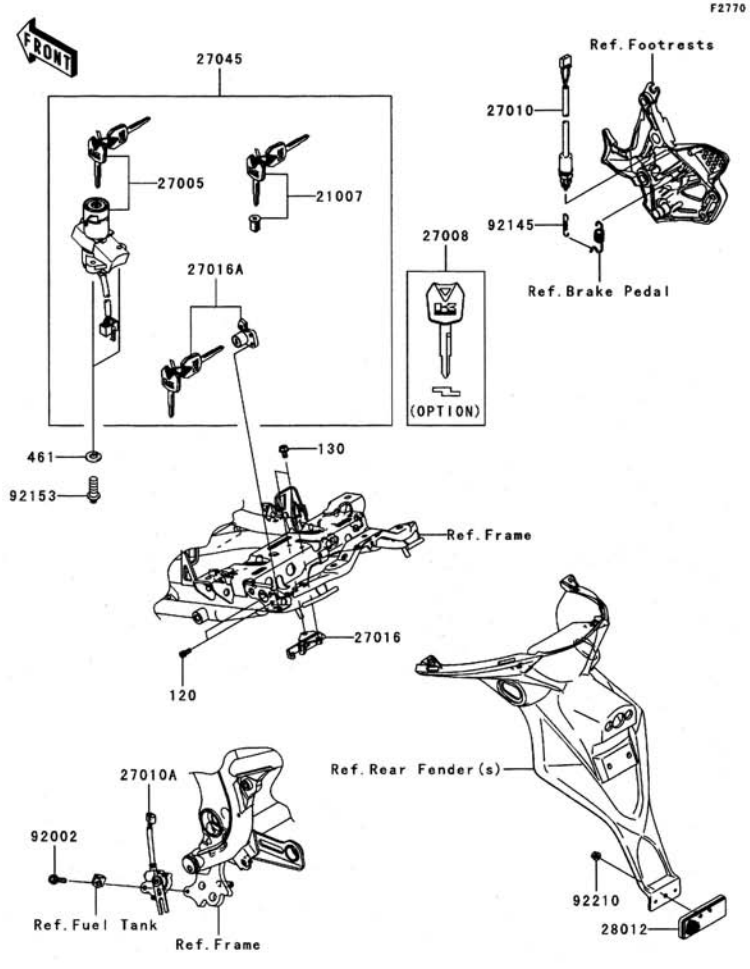

Ref. No.	Part No.	Description	Spec Code	Quantity-KLE650 '07 A7F
21007	21007-5057	ROTOR,LOCK,TANK CAP		1
27005	27005-5141	SWITCH-ASSY-IGNITION		1
27008	27008-0030 (OPTION)	KEY-LOCK,BLANK		1
27010	27010-0072	SWITCH,REAR BRAKE		1
27010A	27010-1455	SWITCH,SIDE STAND		1
27016	27016-1115	LOCK-ASSY,SEAT STRIKER		1
27016A	27016-5309	LOCK-ASSY,SEAT		1
27045	27045-5360	SWITCH-ASSY		1
28012	28012-1077	REFLECTOR-REFLEX		1
92002	92002-1582	BOLT,FLANGED,6X25		1
92145	92145-0091	SPRING,REAR BRAKE SWITCH		1
92153	92153-0967	BOLT,TORX,6X16		2
92210	92210-0007	NUT,FLANGED,5MM		1
120	120S0512	BOLT-SOCKET,5X12		2
130	130L0612	BOLT-FLANGED,6X12		2
461	461L0600	WASHER-SPRING		2

This catalog covers:

’07 KLE650 A7F Chassis

GRID NO. **G-9**

This grid covers:

Owner’s Tools

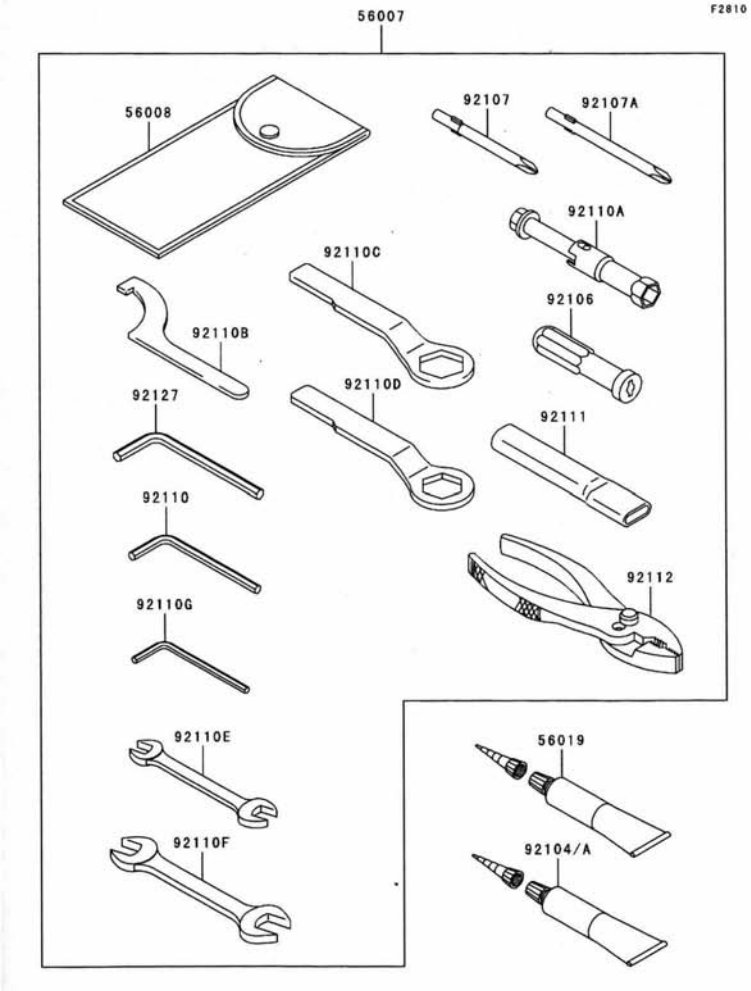

Ref. No.	Part No.	Description	Spec Code	Quantity-KLE650 ’07 A7F				
56007	56007-0026	TOOL-KIT		1				
56008	56008-1075	BAG,TOOL		1				
56019	56019-120	THREE BOND TB1211,HT/RS,WHITE		1				
92104	92104-0004	GASKET-LIQUID,TB1211F		1				
92104A	92104-1064	GASKET-LIQUID,BLACK TB1216B		1				
92106	92106-1001	GRIP-SCREW DRIVER		1				
92107	92107-005	TOOL-DRIVER,#3PHILLIPS		1				
92107A	92107-1053	TOOL-DRIVER,#2PHILLIPS		1				
92110	92110-1015	TOOL-WRENCH,ALLEN,5MM		1				
92110A	92110-1132	TOOL-WRENCH,BOX,16MM		1				
92110B	92110-1144	TOOL-WRENCH,HOOK		1				
92110C	92110-1147	TOOL-WRENCH,BOX END,27MM		1				
92110D	92110-1148	TOOL-WRENCH,BOX END,22MM		1				
92110E	92110-1152	TOOL-WRENCH,OPEN END,10X12		1				
92110F	92110-1153	TOOL-WRENCH,OPEN END,14X17		1				
92110G	92110-3703	TOOL-WRENCH,ALLEN,4MM		1				
92111	92111-1051	TOOL-BAR,BOX END WRENCH		1				
92112	92112-1001	TOOL-PLIERS		1				
92127	92127-003	TOOL-WRENCH,ALLEN,6MM		1				

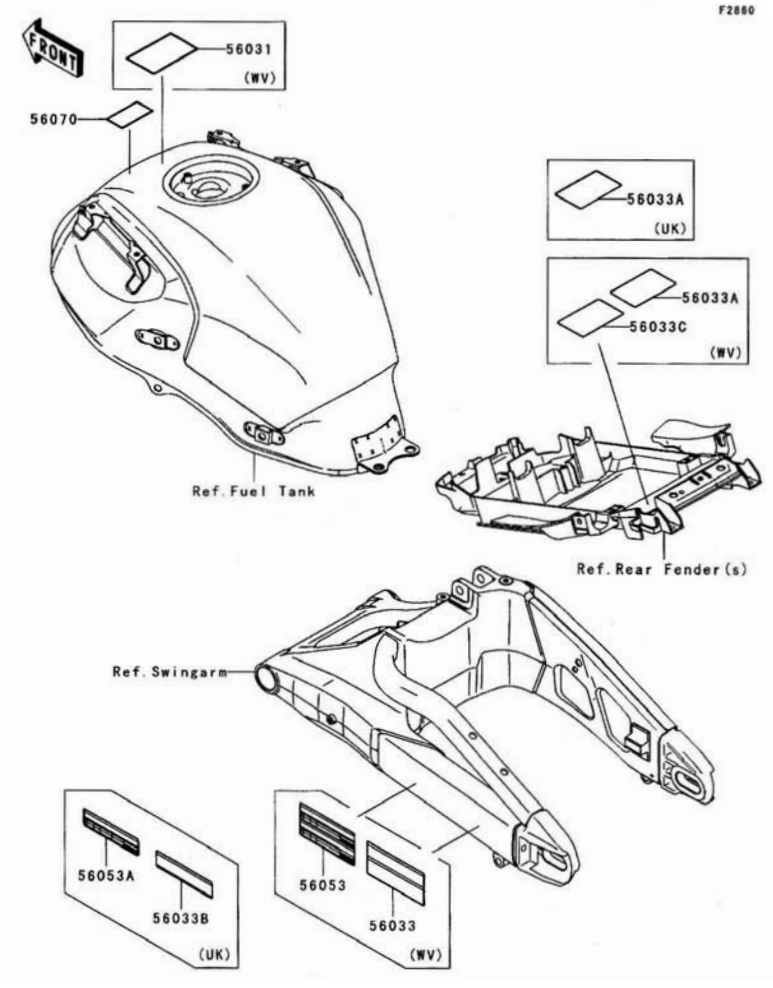

Ref. No.	Part No.	Description	Spec Code	Quantity-KLE650 '07	A7F
56031	56031-1441	LABEL-MANUAL,ENGLISH/FRENCH			
	L		WV	1	
56033	56033-0134	LABEL-MANUAL,CHAIN			
	L		WV	1	
56033A	56033-0136	LABEL-MANUAL,DAILY SAFETY		1	
56033B	56033-0137	LABEL-MANUAL,CHAIN			
	L		UK	1	
56033C	56033-0189	LABEL-MANUAL,DAILY SAFETY			
	L		WV	1	
56053	56053-0217	LABEL-SPECIFICATION,TIRE&LOAD			
	L		WV	1	
56053A	56053-0218	LABEL-SPECIFICATION,TIRE&LOAD			
	L		UK	1	
56070	56070-1143	LABEL,UNLEADED PETROL ONLY		1	

GRID NO. **G-11**

This grid covers:
Decals(Silver)

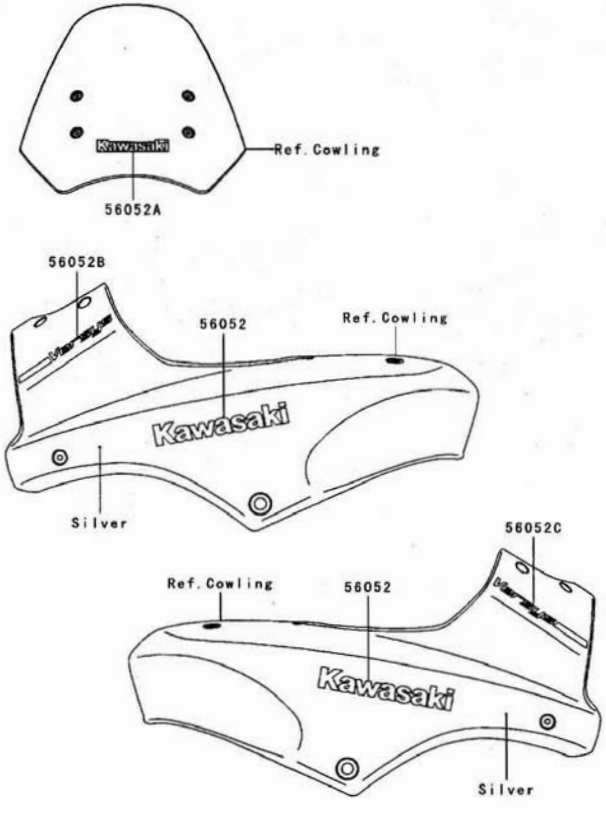

Ref. No.	Part No.	Description	Spec Code	Quantity-KLE650 '07 A7F
56052	56052-0350	MARK,KAWASAKI		2
56052A	56052-1956	MARK,WINDSHIELD,KAWASAKI		1
56052B	56052-1960	MARK,UPP COWLING,VERSYS		1
56052C	56052-1961	MARK,UPP COWLING,VERSYS		1

This catalog covers:

’07 KLE650 A7F Chassis

GRID NO. **G-12**

This grid covers:

Decals(Orange)(Ebony)

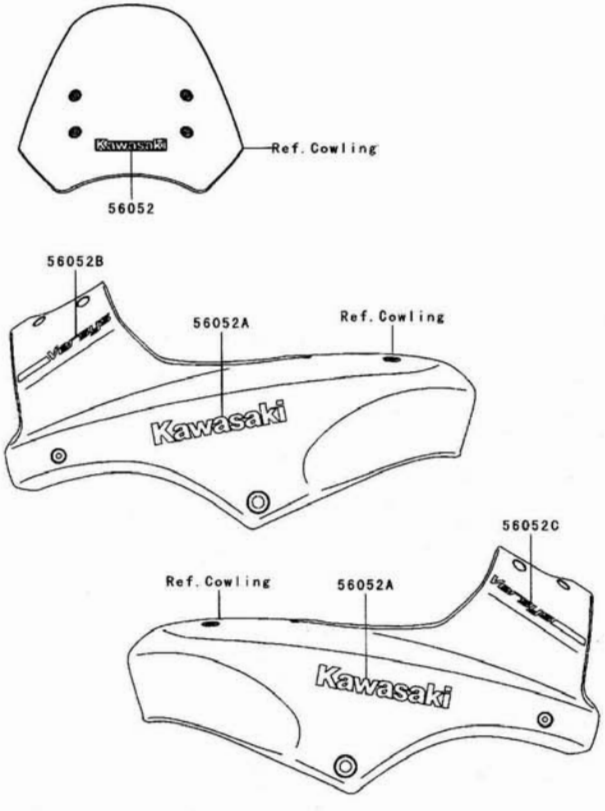

Ref. No.	Part No.	Description	Spec Code	Quantity-KLE650 '07 A7F				
56052	56052-1956	MARK,WINDSHIELD,KAWASAKI		1				
56052A	56052-1957	MARK,UPP COWLING,KAWASAKI		2				
56052B	56052-1958	MARK,UPP COWLING,VERSYS		1				
56052C	56052-1959	MARK,UPP COWLING,VERSYS		1				

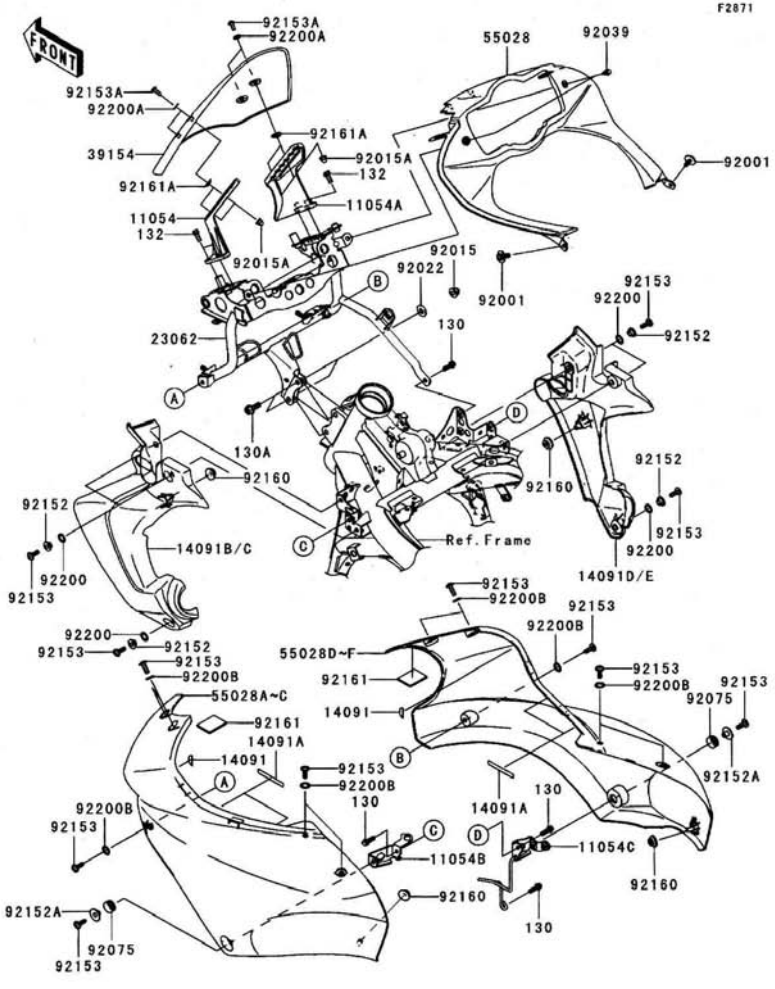

Ref. No.	Part No.	Description	Spec Code	Quantity-KLE650 '07 A7F				
11054	11054-0380	BRACKET,WINDSHIELD,LH		1				
11054A	11054-0381	BRACKET,WINDSHIELD,RH		1				
11054B	11054-0460	BRACKET,UPP COWLING,LH		1				
11054C	11054-1469	BRACKET,UPP COWLING,RH		1				
14091	14091-0606	COVER		2				
14091A	14091-0607	COVER		4				
14091B	14091-0750-11J	COVER,RADIATOR,LH,F.S.BLACK		1				
14091C	14091-0750-458	COVER,RADIATOR,LH,P.SILVER		1				
14091D	14091-0751-11J	COVER,RADIATOR,RH,F.S.BLACK		1				
14091E	14091-0751-458	COVER,RADIATOR,RH,P.SILVER		1				
23062	23062-0051	BRACKET-COMP,UPP COWLING		1				
39154	39154-0022	WINDSHIELD		1				
55028	55028-0109	COWLING,INNER		1				
55028A	55028-0159-H8	COWLING,UPP,LH,EBONY		1				
55028B	55028-0159-17L	COWLING,UPP,LH,C.ORANGE		1				
55028C	55028-0159-17M	COWLING,UPP,LH,SILVER		1				
55028D	55028-0160-H8	COWLING,UPP,RH,EBONY		1				
55028E	55028-0160-17L	COWLING,UPP,RH,C.ORANGE		1				
55028F	55028-0160-17M	COWLING,UPP,RH,SILVER		1				
92001	92001-1950	BOLT,6X16		2				
92015	92015-1174	NUT,CAP,8MM,BLACK		2				
92015A	92015-1263	NUT,LOCK,FLANGE CAP,5MM		4				
92022	92022-1317	WASHER,8.5X20X1.6,BLACK		2				
92039	92039-0023	RIVET		2				
92075	92075-1634	DAMPER		2				
92152	92152-0422	COLLAR		6				
92152A	92152-0545	COLLAR		2				
92153	92153-0478	BOLT,6X18		18				
92153A	92153-1244	BOLT,SOCKET,5X16		4				
92160	92160-1613	DAMPER		4				
92161	92161-0443	DAMPER		2				
92161A	92161-0478	DAMPER		4				
92200	92200-0157	WASHER,10.4X15.9X0.5		6				
92200A	92200-1011	WASHER,NYLON,5.2X12X1		4				
92200B	92200-1388	WASHER,6.5X14X1		10				
130	130J0614	BOLT-FLANGED,6X14		4				
130A	130L0820	BOLT-FLANGED,8X20		2				
132	132G0614	BOLT-FLANGED-SMALL,6X14		4				

F2920

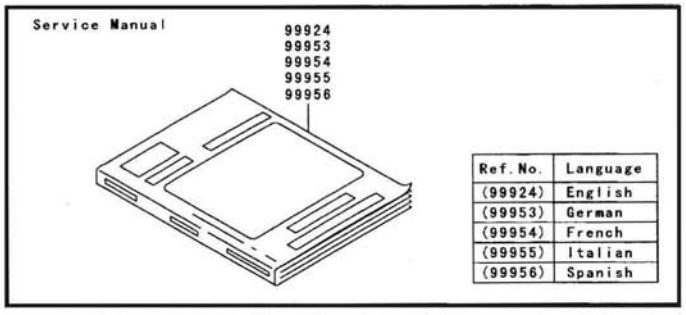

Ref. No.	Language
(99924)	English
(99953)	German
(99954)	French
(99955)	Italian
(99956)	Spanish

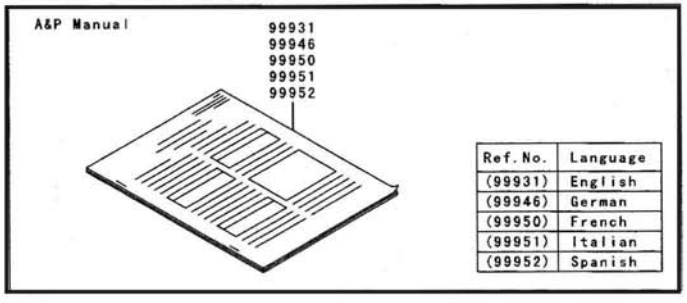

Ref. No.	Language
(99931)	English
(99946)	German
(99950)	French
(99951)	Italian
(99952)	Spanish

Ref. No.	Part No.	Description	Spec Code	Quantity-KLE650 '07 A7F				
99924	99924-1369-01	SERVICE MANUAL,ENGLISH		1				
99931	99931-1472-01	A&P MANUAL,ENGLISH		1				
99946	99946-1038-01	A&P MANUAL,GERMAN		1				
99950	99950-1043-01	A&P MANUAL,FRENCH		1				
99951	99951-1029-01	A&P MANUAL,ITALIAN		1				
99952	99952-1013-01	A&P MANUAL,SPANISH		1				
99953	99953-1035-01	SERVICE MANUAL,GERMAN		1				
99954	99954-1044-01	SERVICE MANUAL,FRENCH		1				
99955	99955-1027-01	SERVICE MANUAL,ITALIAN		1				
99956	99956-1011-01	SERVICE MANUAL,SPANISH		1				

Part No.	Grid No.
11004-0064	B-3
11005-0082	B-5
11008-0107	B-3
11009-1145	D-6
11010-0108	B-6
11012-1084	D-6
11012-1761	F-9
11029-0008	B-6
11051-1503	G-5
11053-1739	C-7
11053-1812	F-10
11054-0133	C-11
11054-0248	E-5
11054-0370	E-5
11054-0380	G-13
11054-0381	G-13
11054-0420	B-7
11054-0421	B-7
11054-0460	G-13
11054-0466	E-10
11054-0485	B-7
11054-0486	B-7
11054-0869	B-4
11054-1283	E-5
11054-1284	E-5
11054-1469	G-13
11054-1524	E-10
11054-1525	E-10
11054-1654	F-4
11060-1952	F-10
11061-0029	F-5
11061-0105	B-4
11061-0107	D-4
11061-0164	C-7
11061-0165	C-7
11061-0166	C-7
11061-0167	C-8
11061-0170	B-4
11061-0171	B-5
11061-0278	B-7
11065-0018	C-9
11065-0120	B-6
11065-0182	C-7
11065-0196	F-9
11065-0197	F-9
11065-0208	B-4
112C0640	F-8
12004-0015	B-8
12005-0035	B-8
12009-1091	B-8
12011-1053	B-8
12021-1130	B-4
12032-0009	B-8
12046-0040	C-12
12046-0041	B-9
12048-0044	B-9
12053-0051	B-9
12053-0059	B-9
12053-0071	C-12
12053-0075	B-9
120P0818	C-13
120S0510	D-3
120S0512	G-8
120S0620	E-10
120S0620	F-8
120S0830	E-5
120S0830	F-8
120Z0630	B-3
120Z0630	B-5
13001-0087	B-5
13002-0007	B-5
13008-1196	B-5
13031-0071	B-10
13042-1006	F-8
13070-0045	F-7
13087-042	B-12
13088-1105	B-12
13089-0016	B-12
13089-0017	B-12
13091-1624	F-8
13091-1652	F-8
13095-0066	B-12
130G0512	C-14
130G0620	C-7
130H0622	D-5
130J0525	C-11
130J0614	G-13
130J0616	E-10
130J0620	C-13
130J0625	G-5
130L0610	E-5
130L0612	G-8
130L0614	F-13
130L0614	F-4
130L0616	F-6
130L0625	F-10
130L0820	G-13
130S0825	G-3
130V0610	G-7
130Z0835	B-7
13102-0029	B-12
13107-0156	C-12
13107-1106	D-3
13116-0018	B-12
13127-0028	B-13
13128-0020	B-13
13140-0025	B-14
13140-0026	B-14
13141-0018	B-14
13144-0024	B-13
13145-0020	B-14
13151-1080	C-7
13159-1056	F-6
13187-1006	B-12
13194-1083	D-3
13227-0012	D-4
13234-0024	B-11
13236-0094	C-3
13236-0136	C-3
13236-0137	C-3
13236-1337	F-4
13251-0010-JJ	B-10
13251-0010-KK	B-10
13262-0245	B-13
13262-0246	B-13
13262-0251	B-13
13262-0252	B-13
13262-0253	B-13
13262-0335	B-13
13262-0337	B-13
13262-0338	B-13
13262-0447	B-13
13262-0498	B-13
13271-0575	C-4
13271-0577	C-4
13271-0584	C-4
13271-0626	B-14
13271-0952	C-13
13271-1187	C-4
13280-0134	C-8
13280-0183	B-14
13280-0192	B-14
13280-0224	C-4
13280-1263	D-3
132G0614	G-13
132G0618	B-4
132J0612	B-4
132J0622	E-5
132J0630	C-7
132L0812	G-7
132L0822	E-4
13320-0010	C-3
14001-0102	C-4
14013-1004	C-4
14014-0018	B-14
14014-0019	B-13
14014-0020	B-13
14025-1725	G-5
14026-0021	C-7
14031-0078	C-7
14032-0094	C-7
14043-0008	C-8
14055-0018	C-4
14073-0110	B-6
14079-0017	B-6
14091-0606	G-13
14091-0607	G-13
14091-0650	F-12
14091-0715	E-10
14091-0719	B-4
14091-0720	C-7
14091-0739-11J	F-14
14091-0739-458	F-14
14091-0740-11J	F-14
14091-0740-458	F-14
14091-0750-11J	G-13
14091-0750-458	G-13
14091-0751-11J	G-13
14091-0751-458	G-13
16007-1228	B-8
16014-0002	C-9
16065-0024	B-3
16073-3707	C-9
16085-0074	D-3
16085-0076	D-3
16097-0004	C-12
16115-1053	C-7
16126-0019	B-6
16126-1140	E-12
16130-1058	C-12
16142-0024	C-12
16142-0046	D-4
16154-0037	C-12
16154-1115	C-12
16160-0110	C-12
16160-0118	D-6
16163-0099	C-9
16165-0001	C-4
18091-0383	B-7
180D0616	F-3
18140-0002	B-7
21003-0042	C-13
21007-0053	C-14
21007-0075	C-13
21007-5057	G-8
21039-0004	D-3
21040-0003	D-3
21066-1127	C-13
21163-0040	D-3
21171-1286	C-14
21175-0103	C-11
21176-0009	C-11
21176-0026	C-11
21176-0035	C-11
21176-0048	C-11
21176-0058	C-11
21176-0065	C-7
21177-1058	C-12
220C0525	F-8
220C0540	F-8
224C0408	G-6
23006-0011	G-4
23007-0039	G-6
23007-0040	G-6
23007-0077	G-4
23008-1619	G-4
23016-0003	G-5
23017-1067	G-4
23025-0047	G-5
23026-1064	G-5
23035-1066	G-5
23037-0061	G-6
23037-0068	G-6
23037-0069	G-6
23037-0102	G-6
23062-0051	G-13
235B0614	E-9
25023-0023	F-12
25031-0129	F-12
26006-0001	G-7
26006-1006	D-3
26006-1078	G-7
26011-0073	G-7
26011-0082	G-7
26011-0083	D-3
26011-0099	G-7
26012-1330	G-7
26031-0534	G-7
27002-0006	G-7
27002-0007	G-7
27003-0040	G-7
27005-5141	G-8
27008-0030	G-8
27010-0025	F-4
27010-0072	G-8
27010-1094	F-8
27010-1313	C-4
27010-1446	D-3
27010-1455	G-8
27012-0098	E-10
27012-1316	E-10
27016-1115	G-8
27016-5309	G-8
27045-5360	G-8
28011-0063	F-12
28012-1077	G-8
290Q0606	C-4
318L0800	E-6
32033-1535	C-12
32065-0024	E-9
32065-0025	E-9
32085-0047	E-8
32154-0661	C-4
32160-0179-11E	E-3
32160-0179-458	E-3
32190-0189	E-4
32190-0252	E-4
33001-0090-458	E-6
33032-1142	E-6
33040-1109	E-6
34003-1474	E-8
34024-0030	E-11
34028-0004	E-8
34028-0005	E-8
34028-1334	E-8
34028-1335	E-8
35004-0081-17L	E-9
35004-0081-17M	E-9
35004-0081-H8	E-9
35019-0048	E-10
35023-0077	E-10
35023-0105	E-10
35063-0310-458	E-8
35063-0401-458	E-8
35063-0408-11E	E-5
35063-0409-11E	E-5
36001-0096-6Z	F-14
36001-0097-6Z	F-14
36014-0018	F-14
36040-0052-6Z	G-3

Part No.	Grid No.
36040-0064-17L	G-3
36040-0064-17M	G-3
36040-0064-H8	G-3
36040-0065-17L	G-3
36040-0065-17M	G-3
36040-0065-H8	G-3
36040-0069-6Z	G-3
36040-0070-6Z	G-3
39061-0097	D-5
39062-0161	D-6
39062-0162	D-6
39062-0163	D-6
39062-0164	D-6
39076-0006	D-3
39110-1124	C-3
39154-0022	G-13
39178-0062	B-7
39193-0029	C-4
39193-0031	C-4
39193-0032	C-4
39193-0033	C-4
39193-0044	C-4
41009-0128	E-12
41009-0129	E-12
41068-0038	E-13
41068-0054	E-14
41073-0051-795	E-14
41073-0053-795	E-13
41075-0007	E-12
41075-0008	E-12
41075-0009	E-12
41080-0040	F-7
41080-0104-11I	F-5
410F0600	F-8
42033-0003	E-14
42034-1143	C-13
42036-0024	E-7
42036-1251	E-14
42036-1358	E-6
42041-0020	E-14
42045-018	E-14
43001-0084	F-3
43010-1074	F-6
43015-0011	F-4
43015-0068	F-6
43020-1054	F-4
43020-1094	F-6
43020-1119	F-7
43022-1010	F-4
43026-1051	F-6
43026-1076	F-4
43027-1051	F-6
43027-1055	F-4
43028-1057	F-6
43028-1058	F-4
43034-0004	F-7
43034-1053	F-4
43044-1110	F-7
43044-1115	F-5
43044-1116	F-5
43048-1073	F-5
43049-1068	F-5
43049-1092	F-5
43049-1097	F-7
43056-1054	F-5
43056-1054	F-7
43057-003	F-5
43057-003	F-7
43078-0035	D-6
43078-1082	F-6
43080-5017-DJ	F-5
43080-5028-DJ	F-5
43080-5061-DJ	F-7
43082-0050	F-5
43082-0051	F-5
43082-1213	F-7
43084-003	F-5
43084-003	F-7
43094-1053	F-8
43095-0193	F-6
43095-0211	F-4
43095-0254	F-6
43095-0328	F-4
44008-0037-499	F-9
44008-0037-KX	F-9
44013-0064-21	F-9
44013-0065-21	F-9
44023-0048	F-9
44023-0049	F-9
44026-0097	F-9
44028-1083	F-9
44037-0053	F-9
44039-0064-458	F-9
44045-051	F-9
44065-0001	F-9
44065-0002	F-9
44065-1017	E-7
44071-5030	F-9
44071-5031	F-9
44071-5032	F-9
44071-5033	F-9
45014-0147-23A	E-7
46003-0120-10T	F-8
46012-0029-458	F-8
46012-0030-458	F-8
46019-0001	F-8
46075-0057	E-5
46075-0058	E-5
46075-1144	F-8
46076-1180	F-8
46091-0088	F-8
46091-0089	F-8
46092-1162	F-8
461K0500	D-3
461L0600	G-8
480J1300	C-3
480J2900	B-13
482L0100	E-8
482L5000	E-8
49002-1116	B-3
49006-1054	F-5
49006-1054	F-7
49006-1095	F-5
49006-1095	F-7
49006-1212	F-7
49016-0033	D-5
49016-1044	F-4
49016-1193	G-4
49033-0011	C-9
49034-0014	C-8
49040-0026	C-10
49047-0019	B-14
49047-0020	B-14
49054-0001	D-6
49063-1055	D-4
49065-0011	C-12
49078-0038	B-8
49085-1066	D-5
49091-0001	F-4
49091-0001	F-6
49107-0081-458	B-7
49107-0081-6Z	B-7
49107-0082-458	B-7
49107-0082-6Z	B-7
49118-0075	B-9
49118-0076	B-9
51001-0117-17L	F-10
51001-0117-17M	F-10
51001-0117-H8	F-10
51044-0034	C-10
51049-0012	F-10
52005-0023	F-10
52005-1057	C-7
53003-0090-MA	F-11
53044-0001	F-10
53044-0012	E-5
53044-0021	E-10
53044-1185	D-5
53066-0143-MA	F-11
54010-0029	F-13
54011-0058	F-13
54012-0208	F-13
54012-0209	F-13
55020-0220	E-10
55020-0234	E-6
55020-0343	D-5
55028-0109	G-13
55028-0159-17L	G-13
55028-0159-17M	G-13
55028-0159-H8	G-13
55028-0160-17L	G-13
55028-0160-17M	G-13
55028-0160-H8	G-13
550D2015	F-6
550D4035	E-14
551A0408	D-4
551A0814	C-4
555A0408	B-10
56001-0051	F-8
56001-0052	F-8
56007-0026	G-9
56008-1075	G-9
56019-120	G-9
56030-0046	G-7
56030-0098	G-7
56031-1441	G-10
56033-0131	C-7
56033-0134	G-10
56033-0136	G-10
56033-0137	G-10
56033-0189	G-10
56052-0350	G-11
56052-1956	G-11
56052-1956	G-12
56052-1957	G-12
56052-1958	G-12
56052-1959	G-12
56052-1960	G-11
56052-1961	G-11
56053-0217	G-10
56053-0218	G-10
56070-1143	G-10
59026-0018	C-14
59256-0007	D-4
59502-0019	D-5
600A0500	B-13
600A0800	E-8
601B6004UU	E-13
601B6204UU	E-14
601B6205UU	E-14
610A0408	B-14
610A0408	C-7
670B2020	C-7
670D1505	C-5
670D1508	C-5
670D1509	C-5
670D1510	C-5
670D2014	C-5
670E5065	C-10
671B2540	C-7
671B2560	E-14
702A06750	F-10
92001-1066	B-12
92001-1776	G-4
92001-1950	D-6
92001-1950	G-13
92002-1143	B-3
92002-1154	D-4
92002-1187	E-6
92002-1322	F-4
92002-1323	F-4
92002-1344	C-12
92002-1582	G-8
92002-1742	E-8
92002-1778	C-3
92002-1796	B-14
92002-1796	C-12
92002-1831	G-5
92002-1935	E-11
92003-208	B-9
92004-0024	C-4
92004-1249	B-3
92004-1275	E-14
92005-1238	C-4
92009-1134	F-8
92009-1158	G-6
92009-1164	F-12
92009-1197	F-12
92009-1360	C-7
92009-1375	B-13
92009-1375	B-14
92009-1378	G-5
92009-1458	F-4
92009-1503	F-12
92009-1909	F-14
92009-1909	G-3
92009-1984	B-6
92009-1984	C-11
92009-3845	E-10
92015-1094	E-10
92015-1174	G-13
92015-1188	E-11
92015-1188	E-4
92015-1197	F-8
92015-1233	F-4
92015-1263	G-13
92015-1311	B-10
92015-1335	E-14
92015-1386	G-4
92015-1433	E-7
92015-1443	C-3
92015-1444	C-3
92015-1476	D-3
92015-1487	D-5
92015-1555	B-12
92015-1602	F-6
92015-1724	E-6
92015-1757	E-10
92015-1904	G-4
92022-077	D-4
92022-1317	G-13
92022-1401	B-5
92022-1405	F-12
92022-1496	C-3
92022-1581	G-5
92022-1601	F-6
92022-1827	C-12
92022-1827	C-3
92022-1868	B-12
92022-228	F-3
92022-3026	E-5
92022-326	F-3
92025-1455	B-13
92026-022	B-12
92026-087	D-3
92026-1217	C-3
92026-1276	F-9
92026-1529	B-13
92027-1450	E-5
92027-1653	B-7

Part No.	Grid No.
92027-1847	G-5
92027-251	D-5
92027-251	F-10
92028-1449	B-13
92028-1903	B-10
92028-1904	B-10
92028-1905	B-10
92033-015	B-13
92033-1037	B-13
92033-1041	E-6
92033-1043	E-14
92033-1102	F-8
92033-1186	F-6
92033-1222	F-9
92033-1247	B-3
92036-008	B-5
92037-010	F-10
92037-1069	G-7
92037-147	B-6
92037-1505	D-6
92037-1680	D-4
92037-1827	G-7
92037-1903	F-8
92039-0015	C-9
92039-0023	G-13
92039-0023	G-3
92039-1283	E-10
92042-007	B-3
92042-014	C-12
92043-0104	F-6
92043-1037	C-4
92043-1145	E-8
92043-1263	C-7
92043-1271	E-8
92043-1489	F-5
92043-1489	F-7
92043-1567	B-3
92043-1567	B-5
92043-4009	B-4
92045-0017	E-6
92045-0042	B-13
92045-1122	B-14
92045-1224	B-13
92045-1235	B-12
92045-1384	E-3
92046-0008	E-6
92046-0017	C-4
92046-1010	C-7
92046-1148	C-4
92046-1148	C-7
92046-1185	B-13
92046-1272	E-7
92049-0022	E-3
92049-0058	F-9
92049-0092	C-3
92049-1056	E-14
92049-1057	E-13
92049-1181	E-6
92049-1185	E-6
92049-1259	D-4
92049-1349	B-8
92049-1475	C-7
92049-1483	E-3
92049-1493	E-7
92049-1501	C-4
92049-1519	C-7
92052-006	E-14
92055-0006	C-4
92055-0016	C-11
92055-0082	D-4
92055-0083	D-4
92055-0131	F-9
92055-086	B-9
92055-1011	C-7
92055-1155	D-4
92055-1251	F-6
92055-1276	D-3
92055-1279	D-6
92055-1293	B-13
92055-1352	B-4
92055-1354	C-12
92055-1370	D-3
92055-1381	D-3
92055-1600	B-3
92057-0098	C-12
92057-0100	B-9
92057-0101	E-14
92058-0007	E-14
92059-1961	E-11
92062-1086	C-4
92065-058	C-7
92065-097	C-8
92066-0002	B-3
92066-0003	C-4
92066-0032	F-9
92066-0056	C-4
92066-0061	C-4
92066-0086	C-8
92066-0088	C-7
92066-1103	E-5
92066-1211	B-6
92066-1216	E-5
92066-1281	F-8
92069-0003	G-6
92069-1016	G-4
92069-1055	G-5
92069-1126	G-4
92070-0014	C-14
92071-0024	D-3
92071-1115	D-5
92072-0012	C-9
92072-1085	E-5
92072-1176	E-5
92072-1195	G-7
92072-1203	E-5
92072-1414	G-7
92075-1002	F-10
92075-1045	F-11
92075-1067	F-14
92075-125	F-10
92075-1634	G-13
92075-1690	D-5
92075-1690	F-10
92075-1912	C-11
92075-1967	E-10
92075-209	E-5
92081-1033	B-12
92081-1833	F-3
92092-1018	F-8
92093-0035	F-9
92093-0045	B-6
92093-0046	B-6
92093-0048	B-6
92104-0004	G-9
92104-1064	G-9
92106-1001	G-9
92107-005	G-9
92107-1053	G-9
92110-1015	G-9
92110-1132	G-9
92110-1144	G-9
92110-1147	G-9
92110-1148	G-9
92110-1152	G-9
92110-1153	G-9
92110-3703	G-9
92111-1051	G-9
92112-1001	G-9
92127-003	G-9
92139-0106	B-12
92139-0107	B-13
92139-0108	B-13
92139-0114	B-10
92139-0115	B-10
92139-0116	B-10
92139-0117	B-11
92139-0118	B-11
92139-0119	B-11
92139-0120	B-13
92143-1087	B-7
92143-1196	B-7
92143-1353	G-4
92143-1379	F-8
92143-1498	C-3
92143-1727	E-6
92144-1467	F-8
92144-1567	E-8
92144-1719	F-7
92144-1818	E-11
92144-1831	F-5
92144-1832	F-5
92144-1844	F-5
92144-1975	C-3
92145-0066	B-12
92145-0091	G-8
92145-0304	C-3
92145-0326	C-3
92145-1319	E-8
92150-1186	D-5
92150-1268	E-8
92150-1301	C-6
92150-1433	C-13
92150-1511	F-9
92150-1604	F-8
92150-1689	D-5
92150-1771	F-5
92150-1771	F-7
92150-1884	C-7
92151-1131	C-7
92151-1131	D-4
92151-1133	D-4
92151-1134	C-7
92151-1134	D-4
92151-1135	C-7
92151-1152	B-3
92151-1201	C-7
92151-1226	C-3
92151-1252	D-6
92151-1277	D-5
92151-1289	F-7
92151-1305	C-7
92151-1389	C-4
92151-1389	C-8
92151-1461	C-6
92151-1462	C-6
92151-1463	C-6
92151-1464	C-6
92151-1465	C-6
92151-1599	F-10
92151-1654	B-7
92151-1654	E-9
92151-1654	F-14
92151-1755	B-7
92151-1930	B-9
92151-1930	C-7
92151-1930	C-8
92151-1937	C-4
92151-1937	D-3
92152-0087	E-13
92152-0118	E-14
92152-0134	C-11
92152-0300	B-13
92152-0301	E-14
92152-0302	E-14
92152-0306	B-9
92152-0311	E-4
92152-0420	E-13
92152-0422	G-13
92152-0497	F-9
92152-0498	F-9
92152-0545	G-13
92152-0546	G-3
92152-1075	C-3
92152-1458	G-5
92153-0018	C-7
92153-0028	F-9
92153-0339	B-3
92153-0417	F-4
92153-0474	E-3
92153-0478	G-13
92153-0513	F-8
92153-0530	C-4
92153-0536	F-9
92153-0537	F-9
92153-0549	C-14
92153-0627	F-4
92153-0627	F-6
92153-0628	F-4
92153-0684	G-5
92153-0725	F-6
92153-0736	E-6
92153-0759	B-6
92153-0793	B-4
92153-0823	E-4
92153-0951	C-13
92153-0952	C-12
92153-0957	B-10
92153-0958	B-14
92153-0959	C-6
92153-0960	C-6
92153-0962	C-4
92153-0963	C-4
92153-0964	C-4
92153-0967	G-8
92153-0969	C-12
92153-0972	B-3
92153-0976	E-4
92153-0995	E-4
92153-1011	B-5
92153-1244	E-10
92153-1244	G-13
92153-1275	F-14
92153-1283	C-10
92153-1321	B-3
92153-1357	B-7
92153-1394	B-9
92153-1414	C-13
92153-1414	C-4
92153-1428	E-4
92153-1446	F-13
92153-1446	G-7
92153-1449	C-6
92153-1450	C-6
92153-1517	E-5
92153-1616	F-10
92153-1624	F-6
92153-1630	E-5
92153-1630	E-8
92153-1661	F-14
92153-1680	F-5
92153-1766	E-7
92153-1767	E-7
92153-1783	D-3
92153-1805	C-4
92160-1116	B-7
92160-1167	F-12
92160-1190	F-14
92160-1613	F-14
92160-1613	G-13
92160-1769	F-14

Part No.	Grid No.
92161-0036	G-4
92161-0041	C-11
92161-0163	G-5
92161-0179	C-11
92161-0191	G-3
92161-0267	C-4
92161-0279	G-3
92161-0283	G-7
92161-0301	D-5
92161-0302	B-6
92161-0303	E-14
92161-0309	B-6
92161-0317	G-3
92161-0443	G-13
92161-0460	E-5
92161-0468	F-9
92161-0478	G-13
92161-0479	G-4
92161-1300	C-3
92161-1313	G-5
92161-1321	F-11
92170-1017	B-6
92170-1067	F-4
92170-1091	F-6
92170-1114	C-9
92170-1167	C-4
92170-1514	B-7
92170-1833	F-10
92171-0069	G-7
92171-0261	D-6
92171-0314	B-6
92171-0316	F-4
92171-0316	F-6
92171-0337	D-6
92171-0435	B-6
92171-0463	F-6
92171-0657	G-7
92171-0789	B-4
92171-0813	B-4
92171-0813	C-7
92171-0825	F-6
92171-0836	C-14
92171-0875	F-12
92171-0882	F-13
92171-0883	F-13
92171-0894	F-13
92171-0911	C-7
92171-1089	B-3
92171-1415	G-7
92171-1424	G-7
92171-1559	G-7
92171-1568	B-7
92172-0009	B-6
92172-0064	C-9
92172-0183	F-8
92172-0209	B-14
92172-0233	G-4
92180-1014	B-8
92180-1016	B-8
92180-1018	B-8
92180-1020	B-8
92180-1022	B-8
92180-1024	B-8
92180-1026	B-8
92180-1028	B-8
92180-1030	B-8
92180-1032	B-8
92180-1034	B-8
92180-1036	B-8
92180-1038	B-8
92180-1040	B-8
92180-1042	B-8
92180-1044	B-8
92180-1046	B-8
92180-1048	B-8
92180-1050	B-8
92180-1052	B-8
92180-1054	B-8
92192-0225	C-4
92192-0231	B-6
92192-0232	B-6
92192-0264	B-6
92192-0315	C-13
92192-0325	B-6
92200-0036	E-3
92200-0043	E-8
92200-0081	E-3
92200-0115	C-6
92200-0157	G-13
92200-0164	G-6
92200-0165	G-6
92200-0220	C-13
92200-0221	B-13
92200-0222	B-13
92200-0274	C-14
92200-0291	B-13
92200-0296	E-14
92200-0328	E-5
92200-0363	B-3
92200-0363	B-5
92200-1011	G-13
92200-1063	C-6
92200-1065	B-13
92200-1240	B-13
92200-1278	B-13
92200-1388	E-9
92200-1388	F-14
92200-1388	G-13
92200-1464	F-9
92200-1487	B-12
92210-0006	F-8
92210-0007	G-8
92210-0062	E-3
92210-0077	E-3
92210-0099	E-6
92210-0188	D-3
92210-0222	B-13
92210-0223	B-5
92210-1081	E-4
92210-1114	B-7
99924-1369-01	G-14
99931-1472-01	G-14
99946-1038-01	G-14
99950-1043-01	G-14
99951-1029-01	G-14
99952-1013-01	G-14
99953-1035-01	G-14
99954-1044-01	G-14
99955-1027-01	G-14
99956-1011-01	G-14
99999-0103	C-9