YAMAHA

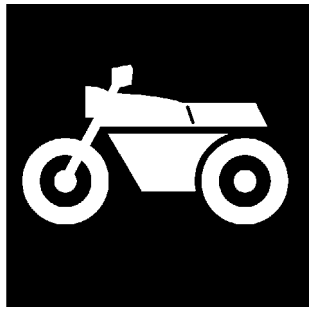

CATALOGO DE REPUESTOS

XP500A (4B5V) EUROPE

1K4B5-352SA

( )

YAMAHA GENUINE Parts & Accessories

XP500A
CATALOGO DE REPUESTOS
©2010 por Yamaha Motor Co., Ltd.
1ª edición, septiembre 2010
Todos los derechos reservados.
Toda reproducción o uso no autorizado
sin el consentimiento escrito de
Yamaha Motor Co., Ltd.
quedan expresamente prohibidos
Impreso en Japón.

PROLOGO

Este catálogo de repuestos corresponde a las piezas para el o los modelos que figuran en la página de portada. Al formular el pedido de repuestos, se ruega citar este catálogo y especificar correctamente el número y el nombre de las piezas.

1. Las modificaciones y agregados que se hayan realizado después de la edición de este Catálogo de Repuestos, serán anunciados en las Informaciones de Recambios.
   Es recomendable que se hagan las correcciones necesarias en el Catálogo de Repuestos de acuerdo con las Informaciones de Recambios.

2. Abreviaciones
   En este. Catálogo de Repuestos se emplean las siguientes abreviaciones.

   "UR" Usar el número de partes especificado
   "UN" Usar la cantidad necesaria
   "AP" Piezas sustitutivas
   "LM" Fabricación local (Hay que pedir los repuestos en las cercanías)
   "F#" Nº de bastidor (Nº aplicable a la máquina)
   "O/S" Sobredimensionado

3. La cantidad de componentes para el montaje
   - Los componentes, suministrados como conjunto, se describen con un punto (.) que precede al nombre del parte como se indica a continuación.
   - La numeración que aparece a la derecha de cada descripción indica la cantidad de partes por cada unidad de conjunto.

CODIGO Nº	DESCRIPCION	CANT.	OBSERVACIONES
2F5–83310–60	ENSAMBLAJE DE LA LUZ	2	
115–83311–60	.BOMBILLA (6V–18W)	1	

4. Los colores de los componentes se indican como sigue en la columna de "OBSERVACIONES".

CODIGO Nº	DESCRIPCION	CANT.	OBSERVACIONES
2N4–24110–00–X5	COMP. DEL TANQUE	2	MXR
3J1–24240–10	.GRAFICO, DEL TANQUE	1	PARA MXR

5. Debe tenerse en cuenta que las ilustraciones sirven como guia para la búsqueda de los números de partes y no deben usarse para el montaje. Durante el montaje, se recomienda usar el manual de taller correspondiente.

6. EL asterisco (*) antes del número de referencia indica los elementos modificados después de la primera edición.

7. Números de serie

Nº de Serie del motor

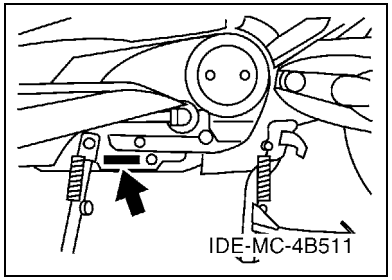

Nº de Serie del bastidor

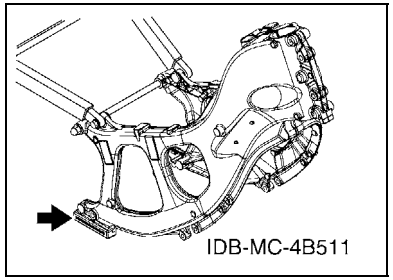

8. Códigos de color aplicables (El símbolo (*) muestra el color de modelo.)

Abreviatura	Nombre de color	Código de color
BWC1(*)	BLUISH WHITE COCKTAIL 1	0390
MBL2	MAT BLACK 2	0582
NMJ(*)	GRAY METALLIC J	1158
SMX(*)	BLACK METALLIC X	0903
YB	YAMAHA BLACK	0033

ROTULO DE MODELO

(1) El rótulo llamada “Rótulo de Modelo” está en la ubicación indicada abajo en el (3). Cuando se utilice este catálogo de repuestos, se ruega cotejar entre el “código de modelo–número de código de producción” del catálogo y el “código de modelo–número de código de producción” indicado en el Rótulo de Modelo fijado en el producto correspondiente.

(2) Indicación del “Rótulo de Modelo”

a b
○ xxxx – xxx
● x c

a: Código de tipo de Modelo
b: Número de código de Producción
c: Tipo de color

○ 4TW1–010
● A

(3) Ubicación de fijación del Rótulo de Modelo

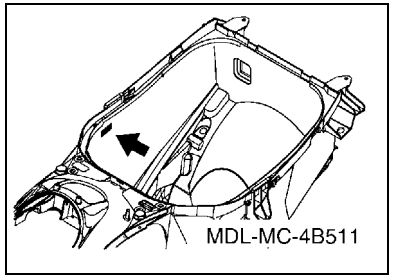

(4) Información de Color

Código de Modelo	Código de tipo de color	Código de color	Nombre de color	Abreviatura
4B5V	A	0903	BLACK METALLIC X	SMX
	B	0390	BLUISH WHITE COCKTAIL 1	BWC1
	C	1158	GRAY METALLIC J	NMJ

(5) Código de Modelo–Número de código de Producción del Modelo Listado en este Catálogo de Repuestos

Código de Modelo	Número de Código de Producción	País (destino)
4B5V	010	AUSTRIA
		CZECHO
		FRANCE
		GERMANY
		HUNGARY
		ITALY
		SPAIN
		SWITZERLAND

Código de Modelo	Número de Código de Producción	País (destino)

CONTENIDO

MOTOR

CILINDRO 1
CIGUENAL & PISTON 3
VALVULA 5
ARBOL DE LEVAS & CADENA 7
BOMBA DE AGUA 8
RADIADOR & MANGUERA 9
BOMBA DE ACEITE 11
ADMISION 12
ADMISION 2 14
DESCARGA 15
CARTER 17
CUBIERTA DE CARTER 1 18
CUBIERTA DE CARTER 2 19
ARRANQUE 21
EMBRAGUE 22
EMBRAGUE 2 23
TRANSMISION 25
TRANSMISION SECUNDARIA 26

SHASIS

CUADRO 28
GUARDABARRO 31
CUBIERTA LATERAL 32
CUBIERTA LATERAL 2 34
BRAZO TRASERO & SUSPENSION 36
DIRECCION 37
HORQUILLA DELANTERA 38
DEPOSITO DE COMBUSTIBLE 40
ASIENTO 41
ASIENTO 2 42
RUEDA DELANTERA 44
CALIBRE FRENO DELANTERA 45
RUEDA TRASERA 47
CALIBRE FRENO TRASERA 48
MANILLAR & CABLE 49
CILINDRO MAESTRO DELANTERO 50
SOPORTE & APOYAPIE 53
SOPORTE & APOYAPIE 2 55
PATA PROTEGIDA 57
PARABRISAS 60
GENERADOR 63
LUZ DE DESTELLADOR 64
MEDIDOR 65
FARO DELANTERO 66
LUZ DE COLA 67
INTERRUPTOR DE MANILLAR&PALANC 68
EQUIPO ELECTRICO 1 69
EQUIPO ELECTRICO 2 72
EQUIPO ELECTRICO 3 73

INDICE

INDICE NUMERICO 74

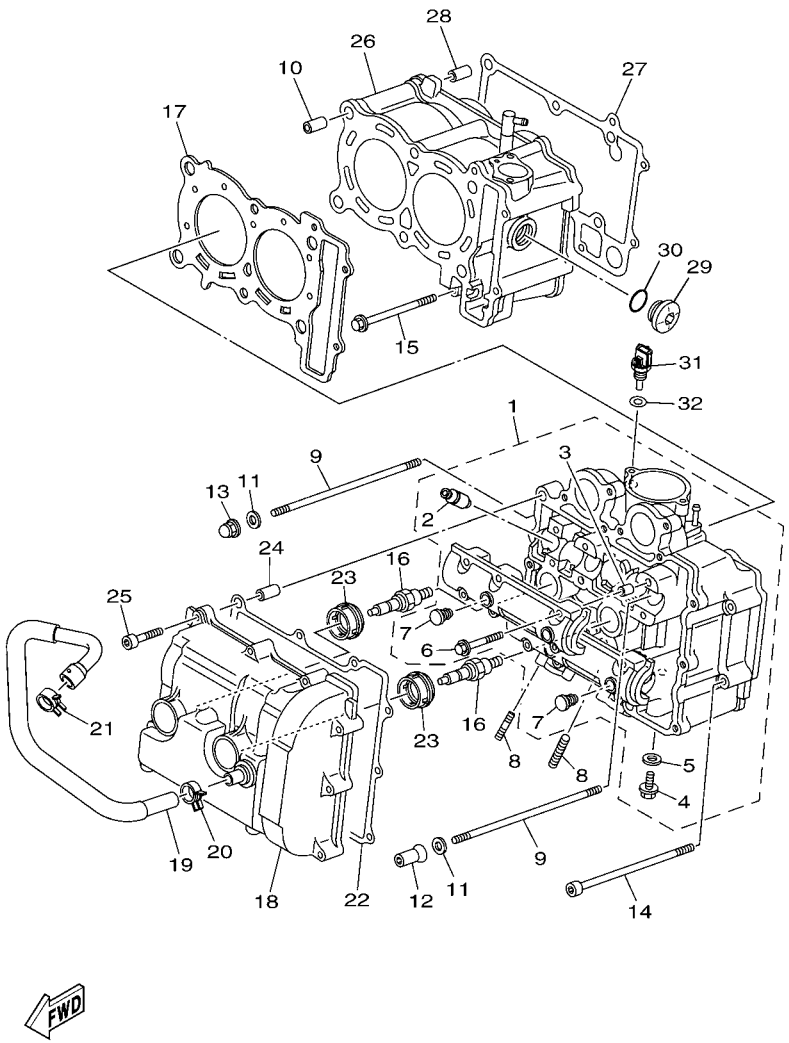

4B51300-G010

FIG. 1 CILINDRO

REF. Nº	CODIGO Nº	DESCRIPCION	4B5V					OBSERVACIONES
1	4B5–11101–01	CULATA DE CILINDRO COMPLETA	1					
2	5GJ–11133–10	.GUIA DE VALVULA 1	8					
3	91808–16023	.PASADOR DE CLAVIJA	4					
4	95022–08012	.PERNO, DE BRIDA	1					
5	90430–08119	.JUNTA	1					
6	90105–06026	.TORNILLO	12					
7	90338–08174	.TAPON	4					
8	95612–08620	PERNO DE PUNTAL	4					
9	90116–09584	ESPARRAGO	6					
10	93612–16254	PASADOR DE CLAVIJA	2					
11	90201–090P4	ARANDELA PLANA	6					
12	90179–09612	TUERCA	4					
13	90179–09003	TUERCA	2					
14	90110–06021	TORNILLO ALLEN	2					
15	95022–06085	PERNO, DE BRIDA	1					
16	94701–00353	BUJIA (NGK CR7E)	2					
17	5GJ–11181–00	JUNTA, DE CULATA 1	1					
18	15B–11190–00	TAPA CULATA DE CILINDRO 1	1					
19	4B5–11166–00	TUBO RESPIRADERO 1	1					
20	90467–13133	PRESILLA	1					
21	90467–16181	PRESILLA	1					
22	5GJ–11193–01	EMPAQUE	1					
23	5GJ–11195–00	EMPAQUE	2					
24	99530–10116	PASADOR, DE ESPIGA	2					
25	91312–06035	TORNILLO	10					
26	15B–W1131–00	CILINDRO	1					
27	5GJ–11351–01	JUNTA, DE CILINDRO	1					

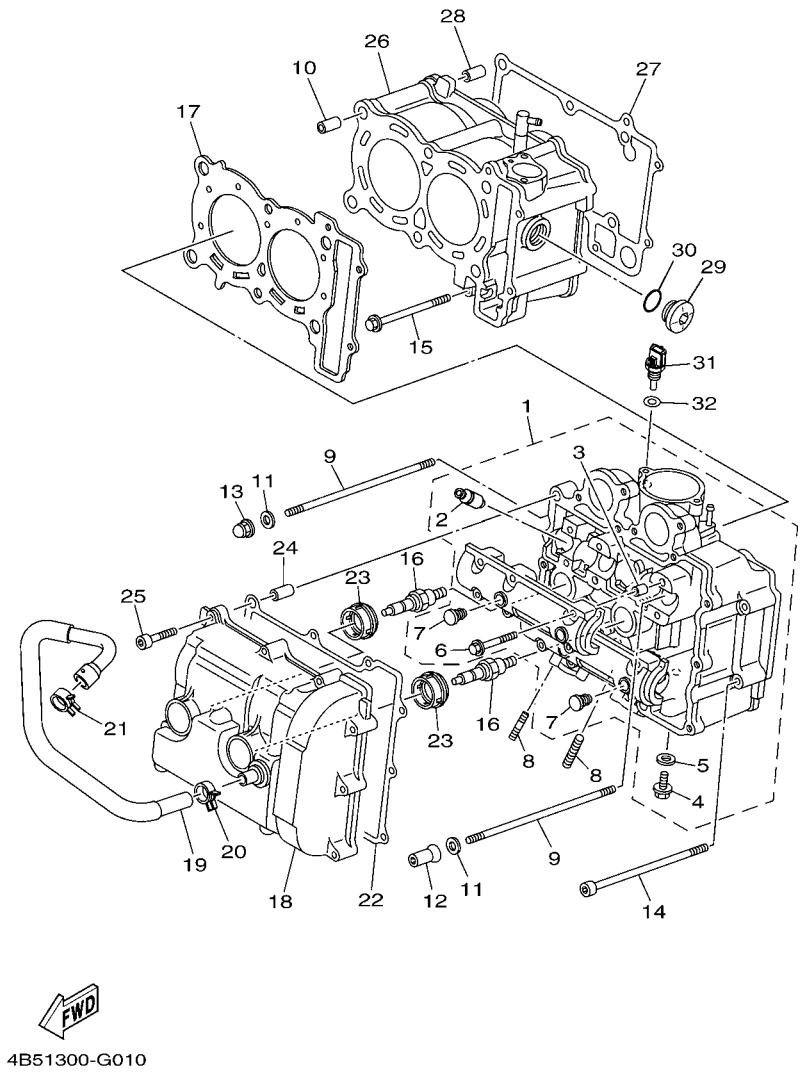

FIG. 1 CILINDRO

REF. Nº	CODIGO Nº	DESCRIPCION	4B5V					OBSERVACIONES
28	93612–16254	PASADOR DE CLAVIJA	2					
29	4H7–15189–00	TAPON	1					
30	93210–22382	ANILLO O	1					
31	5PS–85790–00	TERMICA SENSORIO	1					
32	90430–12202	JUNTA	1					

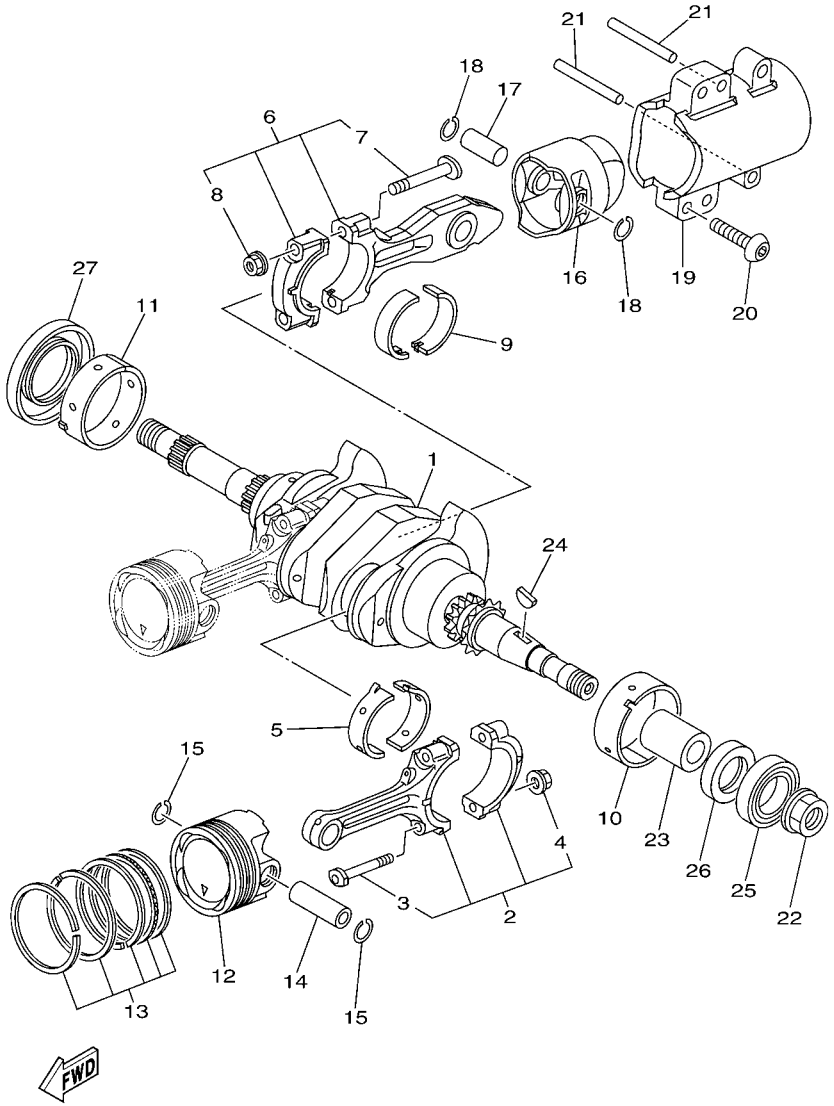

15B1300-F020

FIG. 2 CIGUENAL & PISTON

REF. Nº	CODIGO Nº	DESCRIPCION	4B5V					OBSERVACIONES
1	5VU–11400–00	CIGUENAL COMPLETO	1					
2	5VU–11650–00	BIELA COMPLETA	2					
3	5VU–11654–00	.TORNILLO DE BIELA	2					
4	90179–07652	.TUERCA	2					
5	5GJ–11656–00	COJINETE PLANO	4					UR AZUL
	5GJ–11656–10	COJINETE PLANO	4					UR NEGRO
	5GJ–11656–20	COJINETE PLANO	4					UR CASTANO
	5GJ–11656–30	COJINETE PLANO	4					UR VERDE
6	5GJ–11660–11	BIELA COMPLETO	1					
7	4X7–11654–01	.TORNILLO DE BIELA	2					
8	90179–09379	.TUERCA	2					
9	5GJ–11656–00	COJINETE PLANO	2					UR AZUL
	5GJ–11656–10	COJINETE PLANO	2					UR NEGRO
	5GJ–11656–20	COJINETE PLANO	2					UR CASTANO
	5GJ–11656–30	COJINETE PLANO	2					UR VERDE
10	5GJ–11416–00	COJINETE PLANO 1	1					UR AZUL
	5GJ–11416–10	COJINETE PLANO 1	1					UR NEGRO
	5GJ–11416–20	COJINETE PLANO 1	1					UR CASTANO
	5GJ–11416–30	COJINETE PLANO 1	1					UR VERDE
	5GJ–11416–40	COJINETE PLANO 1	1					UR AMARILLO
	5GJ–11416–A0	COJINETE PLANO 1	1					UR BLANCO
11	5GJ–11417–00	COJINETE PLANO 2	1					UR AZUL
	5GJ–11417–10	COJINETE PLANO 2	1					UR NEGRO
	5GJ–11417–20	COJINETE PLANO 2	1					UR CASTAN0
	5GJ–11417–30	COJINETE PLANO 2	1					UR VERDE
	5GJ–11417–40	COJINETE PLANO 2	1					UR AMARILLO
	5GJ–11417–A0	COJINETE PLANO 2	1					UR BLANCO

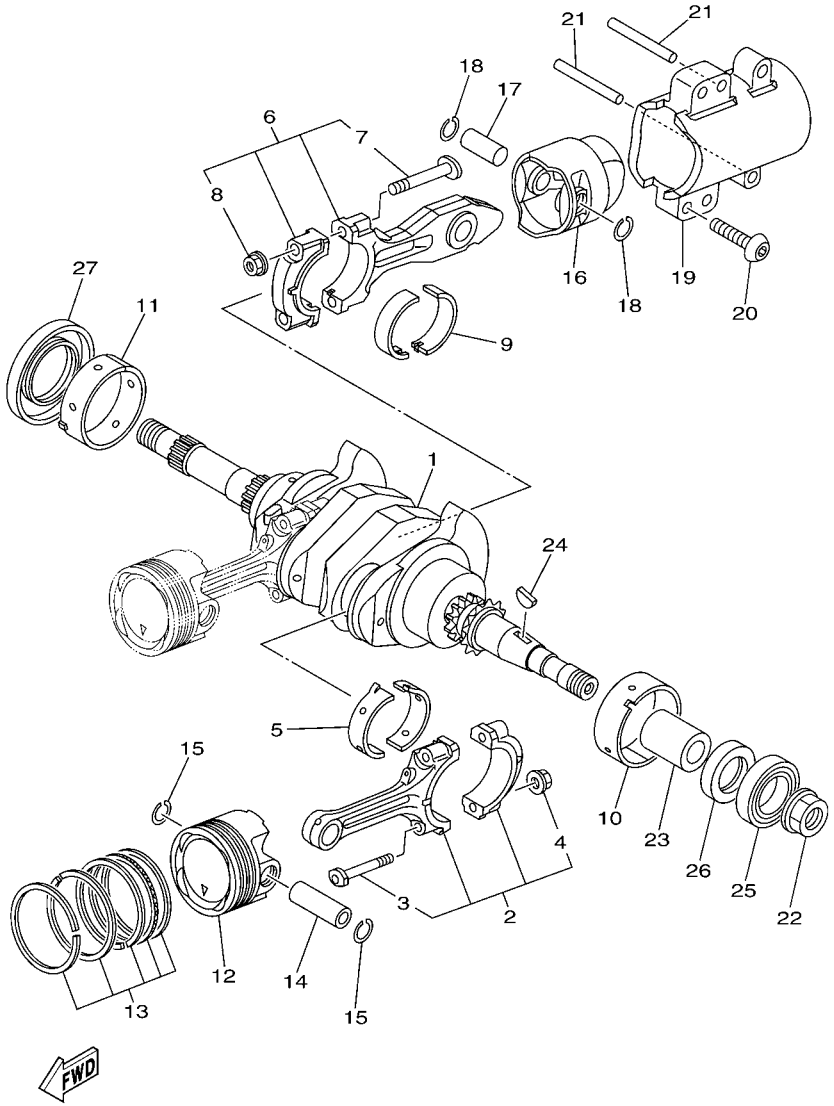

15B1300-F020

FIG. 2 CIGUENAL & PISTON

REF. Nº	CODIGO Nº	DESCRIPCION	4B5V					OBSERVACIONES
12	5VU–11631–00	PISTON (NORMA)	2					
13	5GJ–11603–00	JUEGO DE ANILLOS (NORMA)	2					
14	5VU–11633–00	PASADOR, PISTON	2					
15	93450–16159	SEGURO	4					
16	5GJ–11642–10–A0	PISTON 2 (NORMA)	1					
17	5GJ–11455–10	EJE 1	1					
18	93450–16068	SEGURO	2					
19	5GJ–11312–00	CAMISA DE CILINDRO	1					
20	90111–10026	TORNILLO	4					
21	93608–60001	PASADOR DE CLAVIJA	2					
22	90179–18007	TUERCA	1					
23	90387–18001	ESPACIADOR	1					
24	90280–05048	CUNA WOODRUFF	1					
25	93306–90602	COJINETE	1					
26	93101–30001	SELLO ACEITE	1					
27	93102–44008	SELLO ACEITE	1					

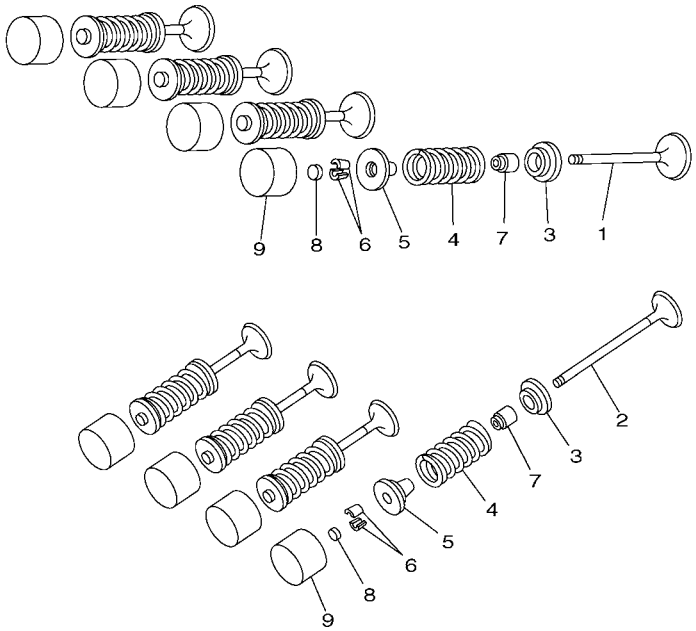

FIG. 3 VALVULA

REF. Nº	CODIGO Nº	DESCRIPCION	4B5V					OBSERVACIONES
1	5GJ–12111–00	VALVULA DE ADMISION	4					
2	5GJ–12121–01	VALVULA DE ESCAPE	4					
3	5EB–12126–00	ASIENTO RESORTE DE VALVULA2	8					
4	4GY–12113–00	RESORTE VALVULA INTERNA	8					
5	5EB–12127–00	RETEN RESORTE DE VALVULA	8					
6	1HX–12118–00	SEGURO DE VALVULA	16					
7	4TV–12119–00	SELLO DE ACEITE VALVULA	8					
8	1HX–12168–00	COJIN, AJUSTADOR 2 (1.20)	8					UR
	1HX–12168–20	COJIN, AJUSTADOR 2 (1.25)	8					UR
	1HX–12168–40	COJIN, AJUSTADOR 2 (1.30)	8					UR
	1HX–12168–60	COJIN, AJUSTADOR 2 (1.35)	8					UR
	1HX–12168–80	COJIN, AJUSTADOR 2 (1.40)	8					UR
	1HX–12168–A0	COJIN, AJUSTADOR 2 (1.45)	8					UR
	1HX–12168–F0	COJIN, AJUSTADOR 2 (1.50)	8					UR
	1HX–12168–H1	COJIN, AJUSTADOR 2 (1.55)	8					UR
	1HX–12168–K1	COJIN, AJUSTADOR 2 (1.60)	8					UR
	1HX–12168–M1	COJIN, AJUSTADOR 2 (1.65)	8					UR
	1HX–12168–R1	COJIN, AJUSTADOR 2 (1.70)	8					UR
	1HX–12168–U1	COJIN, AJUSTADOR 2 (1.75)	8					UR
	1HX–12168–W1	COJIN, AJUSTADOR 2 (1.80)	8					UR
	1HX–12168–Y1	COJIN, AJUSTADOR 2 (1.85)	8					UR
	1HX–12169–11	COJIN, AJUSTADOR 2 (1.90)	8					UR
	1HX–12169–31	COJIN, AJUSTADOR 2 (1.95)	8					UR
	1HX–12169–50	COJIN, AJUSTADOR 2 (2.00)	8					UR
	1HX–12169–70	COJIN, AJUSTADOR 2 (2.05)	8					UR
	1HX–12169–90	COJIN, AJUSTADOR 2 (2.10)	8					UR
	1HX–12169–E0	COJIN, AJUSTADOR 2 (2.15)	8					UR

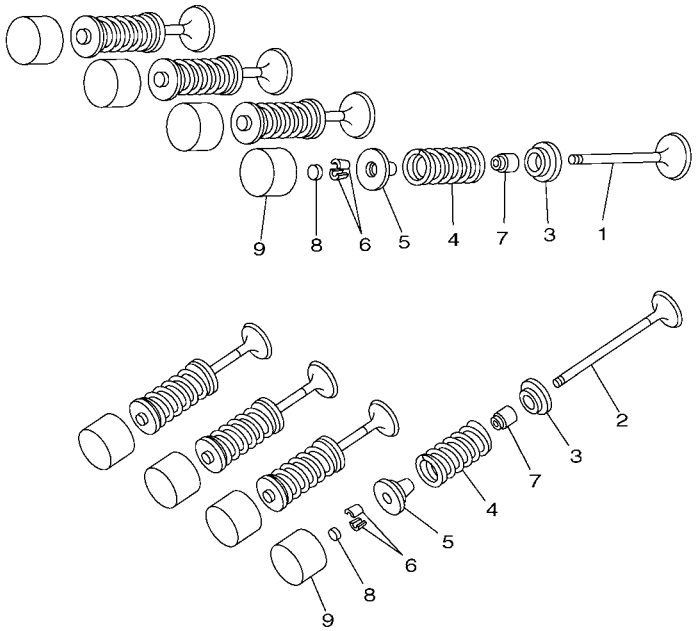

FIG. 3 VALVULA

REF. Nº	CODIGO Nº	DESCRIPCION	4B5V					OBSERVACIONES
8	1HX–12169–G0	COJIN, AJUSTADOR 2 (2.20)	8					UR
	1HX–12169–J0	COJIN, AJUSTADOR 2 (2.25)	8					UR
	1HX–12169–L0	COJIN, AJUSTADOR 2 (2.30)	8					UR
	1HX–12169–N0	COJIN, AJUSTADOR 2 (2.35)	8					UR
	1HX–12169–T0	COJIN, AJUSTADOR 2 (2.40)	8					UR
9	5EB–12153–10	LEVANTADOR DE VALVULA	8					UR AMARILLO
	5EB–12153–09	LEVANTADOR DE VALVULA (O/S)	8					AP VERDE

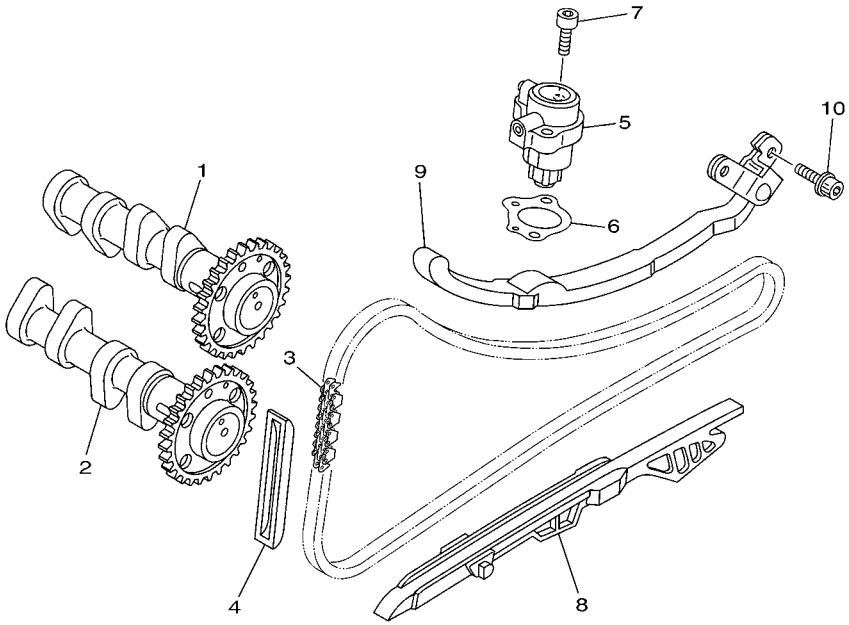

15B1300-F040

FIG. 4 ARBOL DE LEVAS & CADENA

REF. Nº	CODIGO Nº	DESCRIPCION	4B5V					OBSERVACIONES
1	5VU–12170–10	ARBOL DE LEVAS COMPLETO 1	1					
2	5VU–12180–10	ARBOL DE LEVAS COMPLETO 2	1					
3	94582–18132	CADENA	1					DAIDO
4	5BE–12241–00	TOPE DE GUIA 2	1					
5	15B–12210–10	TENSOR CADENA DE LEVA	1					
6	15B–12213–00	EMPAQUE DE CAJA TENSOR	1					
7	91312–06020	TORNILLO	2					
8	5VU–12251–00	AMORTIGUADOR CADENA 1	1					
9	5GJ–12252–00	AMORTIGUADOR CADENA 2	1					
10	90110–06218	TORNILLO ALLEN	2					

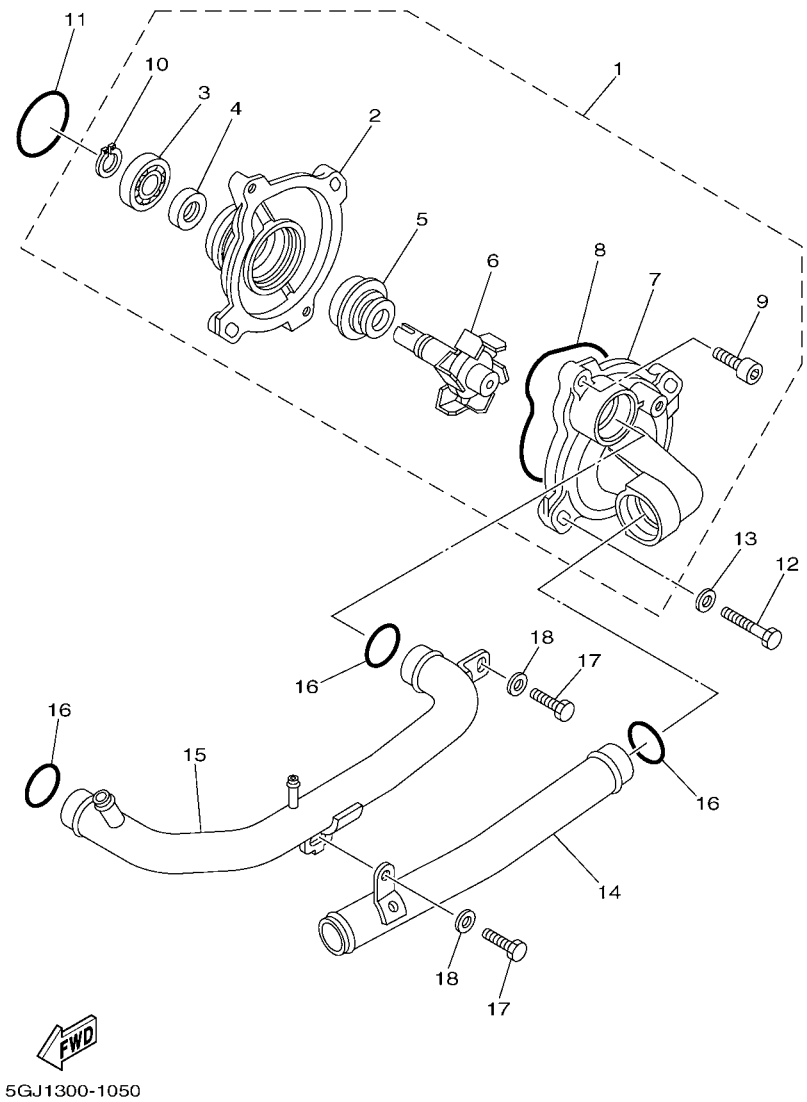

FIG. 5 BOMBA DE AGUA

REF. Nº	CODIGO Nº	DESCRIPCION	4B5V					OBSERVACIONES
1	15B–12420–00	BOMBA DE AGUA COMPLETA	1					
2	5VU–12421–00	.CAJA DE BOMBA DE AGUA	1					
3	93306–00106	.COJINETE	1					
4	93102–12442	.SELLO ACEITE	1					
5	11H–12438–10	.SELLO MECANICO	1					
6	5VU–12450–00	.EJE IMPULSOR COMPLETO	1					
7	5GJ–12422–02	.CUBIERTA DE CAJA	1					
8	1WG–12439–00	.ANILLO O	1					
9	91312–06020	.TORNILLO	2					
10	99009–12400	.PRESILLA REDONDA	1					
11	93210–33133	ANILLO O	1					
12	97022–06030	PERNO	2					
13	92902–06600	ARANDELA	2					
14	4B5–12481–00	TUBO 1	1					
15	4B5–12482–00	TUBO 2	1					
16	93210–21190	ANILLO O	3					
17	97022–06016	PERNO	2					
18	92902–06600	ARANDELA	2					

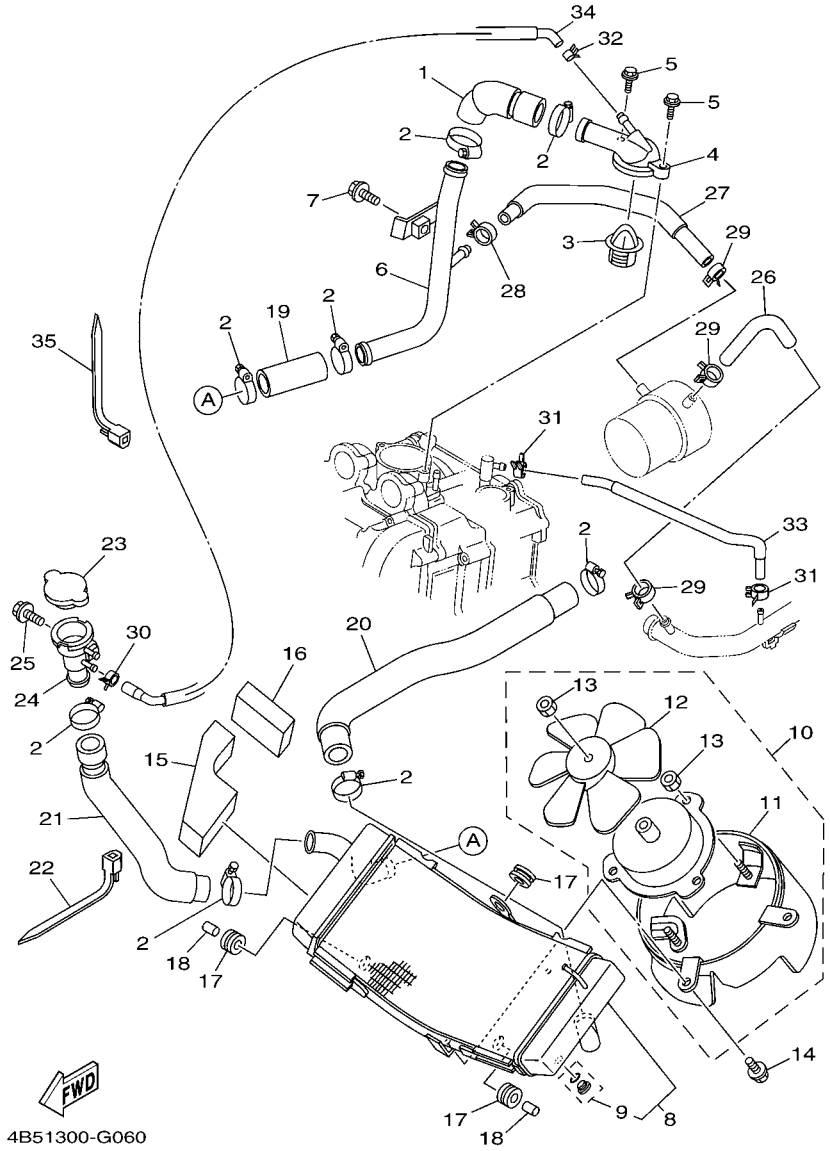

FIG. 6 RADIADOR & MANGUERA

REF. Nº	CODIGO Nº	DESCRIPCION	4B5V					OBSERVACIONES
1	4B5–12483–00	TUBO 3	1					
2	90450–32015	BRIDA, MANGUERA	8					
3	4JH–12410–00	TERMOSTATO CONJUNTO	1					
4	4B5–12413–00	CUBIERTA TERMOSTATO	1					
5	95022–06025	PERNO, DE BRIDA	2					
6	4B5–12484–00	TUBO 4	1					
7	95022–06012	PERNO, DE BRIDA	1					
8	4B5–12461–00	RADIADOR COMPLETO	1					
9	5VU–12478–00	.GRIFO DE DRENAJE	1					
10	4B5–12405–00	COMPRESOR	1					
11	4B5–12620–00	.ARO RESF DE AIRE	1					
12	5VU–12611–00	.VENTILADOR	1					
13	95702–05500	.TUERCA DE BRIDA	4					
14	5GJ–12675–00	PERNO, SUJECION VENTILADOR	3					
15	4B5–28455–00	AMORTIGUADOR 4	1					
16	4B5–2837J–00	AMORTIGUADOR	1					
17	90480–16301	TAPON	3					
18	90387–07020	ESPACIADOR	2					
19	4B5–12485–00	TUBO 5	1					
20	4B5–12476–00	TUBO 6	1					
21	4B5–12477–00	TUBO 7	1					
22	90464–15195	BRIDA	1					
23	5SL–12462–00	TAPON, DEL RADIADOR	1					
24	5GJ–12591–00	SOPORTE	1					
25	95802–06012	TORNILLO DE REBORDE	1					
26	5GJ–1243A–00	TUBO 1	1					
27	4B5–1243E–00	TUBO 2	1					

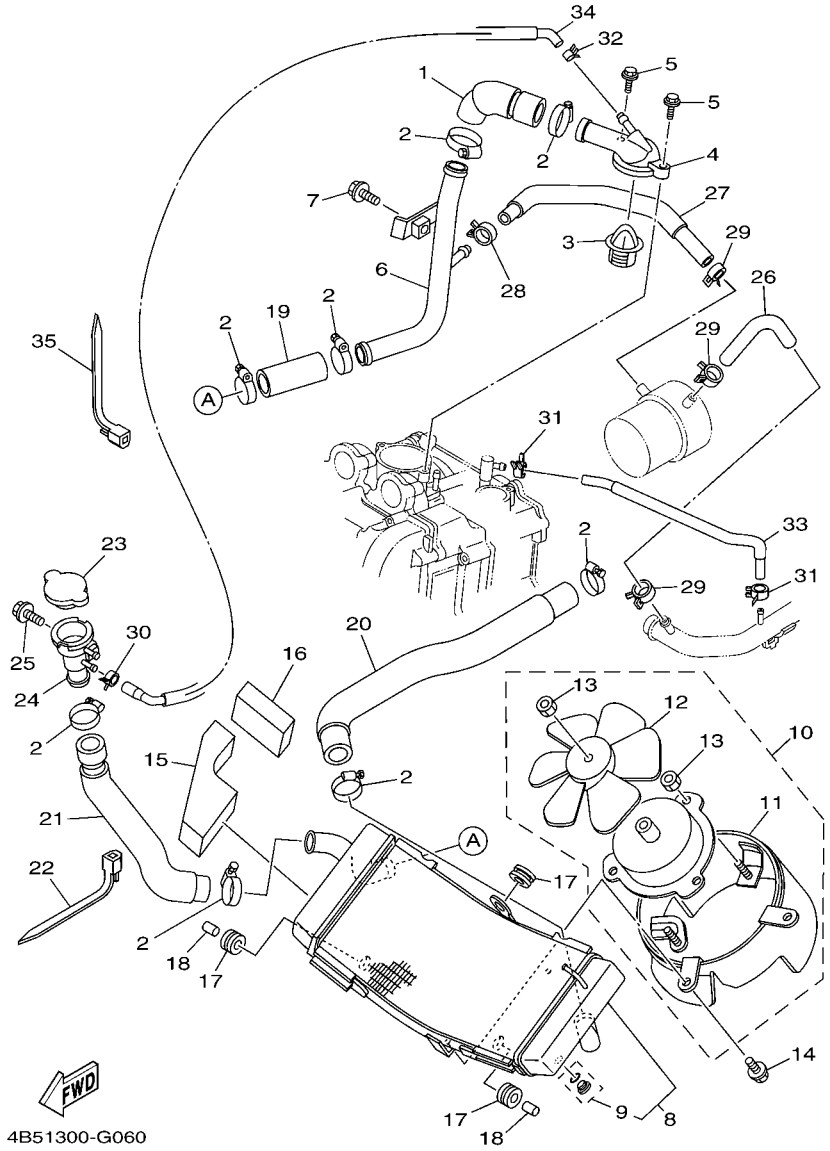

FIG. 6 RADIADOR & MANGUERA

REF. Nº	CODIGO Nº	DESCRIPCION	4B5V					OBSERVACIONES
28	90467–15001	PRESILLA	1					
29	90467–15141	PRESILLA	3					
30	90467–10038	PRESILLA	1					
31	90467–10035	PRESILLA	2					
32	90467–09120	PRESILLA	1					
33	5GJ–12589–00	MANGUERA 6	1					
34	4B5–12551–00	55 PLACA	1					
35	90464–13073	BRIDA	1					

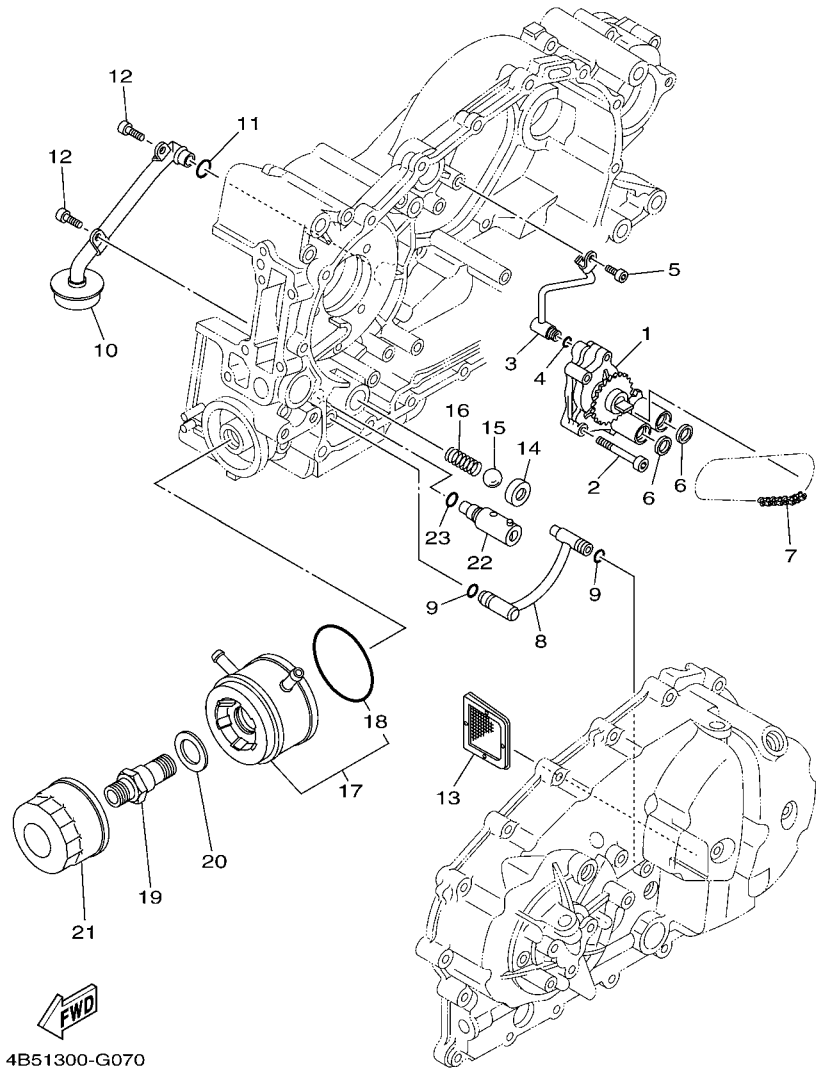

FIG. 7 BOMBA DE ACEITE

REF. Nº	CODIGO Nº	DESCRIPCION	4B5V					OBSERVACIONES
1	5GJ–13300–00	BOMBA DE ACEITE COMPLETA	1					
2	92012–06050	PERNO	3					
3	5GJ–13161–00	TUBO CONDUCTOR 1	1					
4	93210–06422	ANILLO O	1					
5	90110–06168	TORNILLO ALLEN	1					
6	5GJ–13475–00	EMPAQUE	2					
7	94580–25058	CADENA	1					
8	5GJ–13405–00	TUBO DE ACEITE COMPL. 1	1					
9	93210–09525	ANILLO O	2					
10	5GJ–13410–00	CAJA DE FILTRO COMPLETA	1					
11	93210–14579	ANILLO O	1					
12	90110–06168	TORNILLO ALLEN	2					
13	22F–13411–01	FILTRO DE ACEITE	1					
14	3LD–13113–00	ASIENTO BOLA RETENSORA	1					
15	93505–08030	BOLA	1					
16	90501–104F9	RESORTE DE COMPRESION	1					
17	4B5–13470–00	ENFRIADOR DE ACEITE COMPLETO	1					
18	5JW–13473–00	.ANILLO O	1					
19	90401–20005	PERNO DE UNION	1					
20	90201–25017	ARANDELA PLANA	1					
21	5DM–13440–00	ELEMENTO FILTRO DE ACEITE	1					
22	4G0–13490–01	VALVELA DE DESCOMPRESION	1					
23	93210–10096	ANILLO O	1					

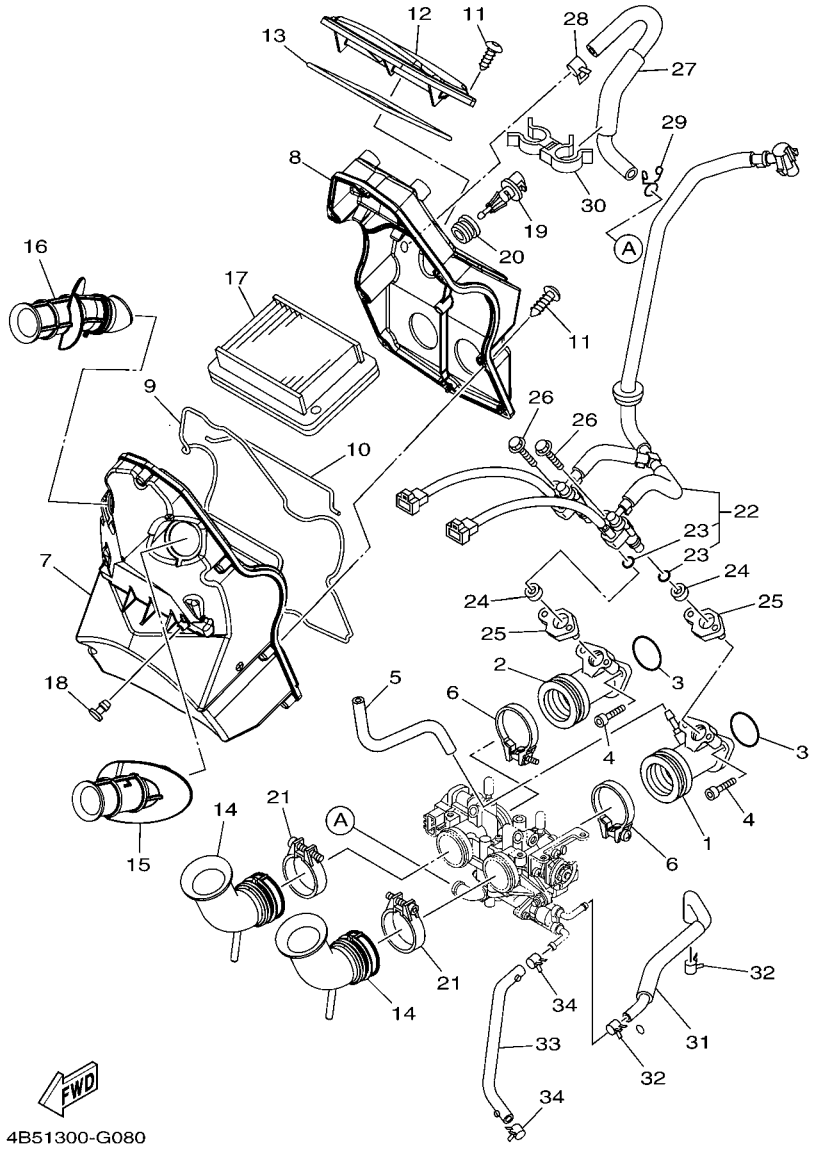

FIG. 8 ADMISION

REF. Nº	CODIGO Nº	DESCRIPCION	4B5V					OBSERVACIONES
1	5VU–13586–01	TOBERA DE CARBURADOR 1	1					
2	5VU–13596–01	TOBERA DE CARBURADOR 2	1					
3	93210–32738	ANILLO O	2					
4	91312–06020	TORNILLO	4					
5	90445–08017	TUBO	1					
6	90450–47002	BRIDA, MANGUERA	2					
7	4B5–14411–00	CAJA FILTRO DEL AIRE 1	1					
8	4B5–14412–00	TAPA CAJA DEL FILTRO 1	1					
9	4B5–14452–00	SELLO	1					
10	4B5–14457–00	SELLO	1					
11	97702–50025	TORNILLO ROSCA HEMBRA	12					
12	4B5–1441A–00	CUBIERTA DE CAJA FILTRO 1	1					
13	4B5–14462–00	SELLO	1					
14	4B5–14453–00	UNION DEL FILTRO DEL AIRE 1	2					
15	4B5–14437–00	CONDUCTO	1					
16	4B5–1443A–00	CONDUCTO	1					
17	4B5–14451–00	ELEMENTO DEL FILTRO DEL AIRE	1					
18	90338–05056	TAPON	1					
19	5VU–85886–00	SENSOR	1					
20	5CA–14435–00	ANILLO PROTECTOR	1					
21	90450–47002	BRIDA, MANGUERA	2					
22	4B5–13930–00	PIPE INLET COMPL.	1					
23	5CA–14147–00	.ANILLO O	2					
24	90430–09002	JUNTA	2					
25	15B–13556–00	EMPAQUE	2					
26	95812–06030	TORNILLO DE REBORDE	2					
27	4B5–13545–00	SELLO	1					

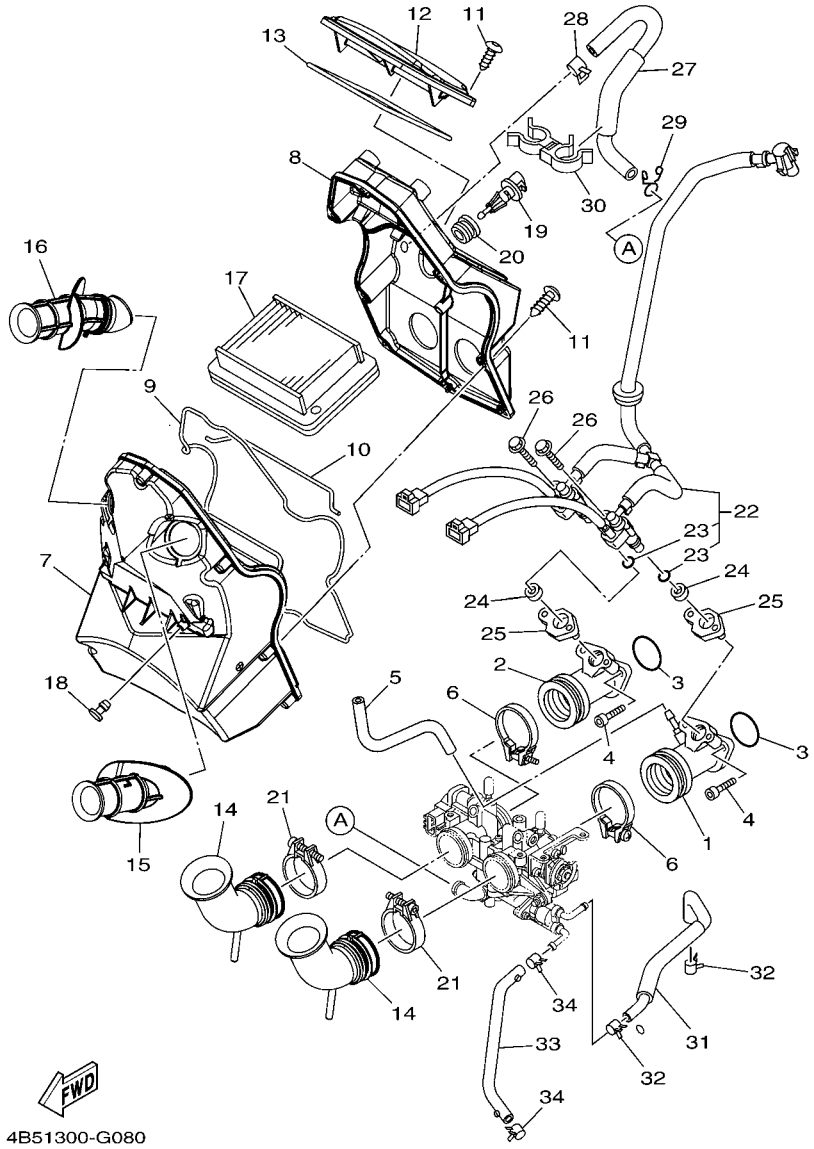

FIG. 8 ADMISION

REF. Nº	CODIGO Nº	DESCRIPCION	4B5V					OBSERVACIONES
28	90467–17089	PRESILLA	1					
29	90467–150A2	PRESILLA	1					
30	90464–20015	BRIDA	1					
31	4B5–1243F–00	MANGUERA 3	1					
32	90467–10035	PRESILLA	2					
33	4B5–1244G–00	MANGUERA 4	1					
34	90467–10035	PRESILLA	2					

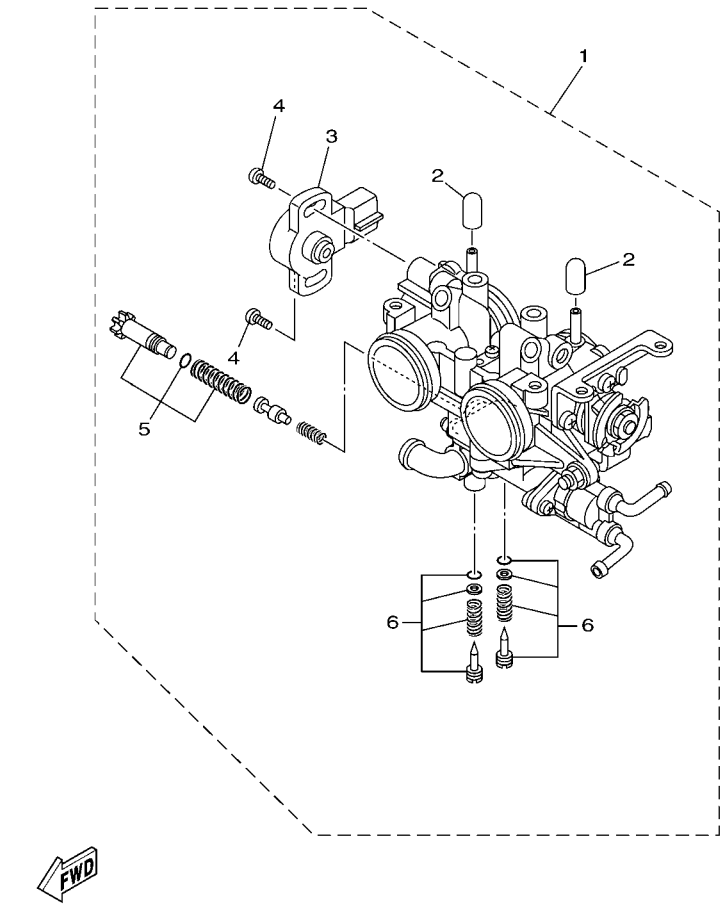

FIG. 9 ADMISION 2

REF. Nº	CODIGO Nº	DESCRIPCION	4B5V					OBSERVACIONES
1	4B5–13750–00	CAJA DE ACELERADOR COMPL.	1					
2	84M–14169–00	.FUNDA	2					
3	8GL–85885–00	.TERMICA SENSORIO	1					
4	8CC–14216–10	.TORNILLO	2					
5	5VX–14503–00	.CARBURADOR COMPL.	1					
6	5JW–14104–00	.CJTO. TORNNILLO DE AIRE	2					

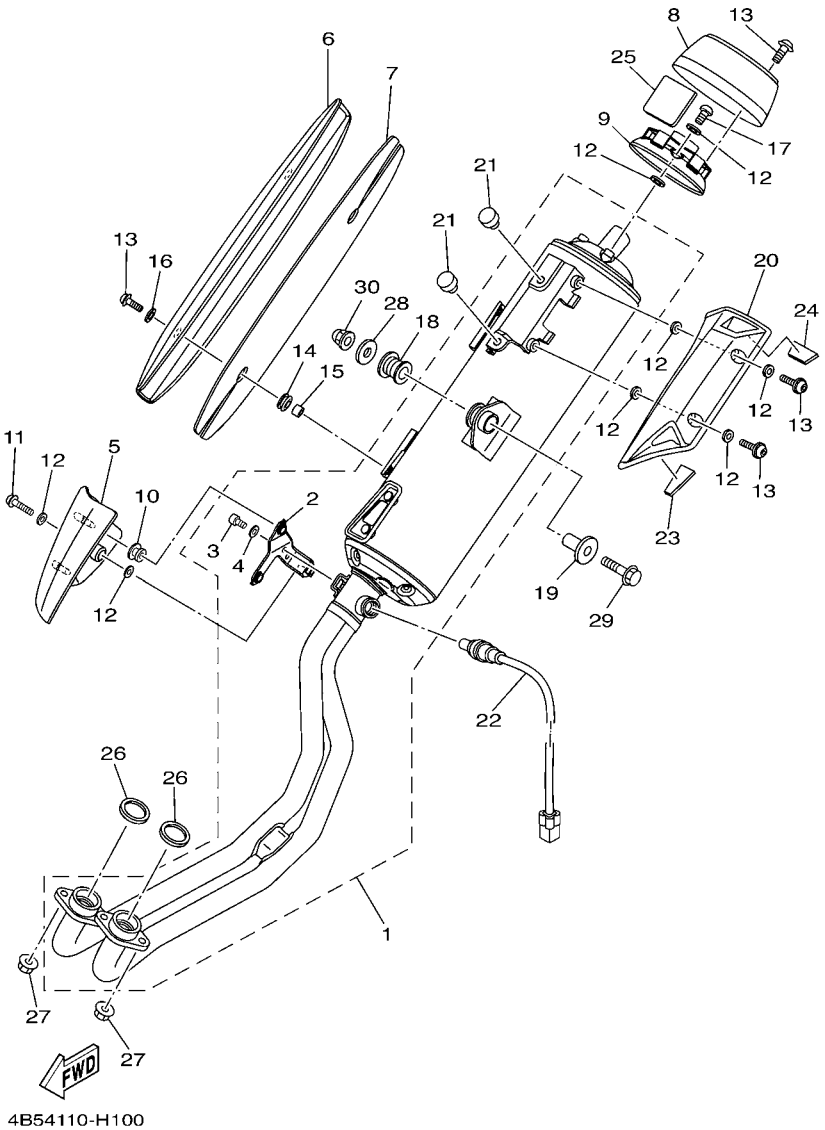

FIG. 10 DESCARGA

REF. Nº	CODIGO Nº	DESCRIPCION	4B5V					OBSERVACIONES
1	4B5–14711–31	SILENCIADOR 1	1					
2	4B5–1471M–00	.AMORTIGUADOR 1-3	1					
3	91380–06012	.PERNO	2					
4	92990–06200	.ARANDELA PLANA	2					
5	4B5–1465R–00	PLACA DE PROTECTOR	1					
6	5VU–1465T–00	PLACA, DE PROTECTOR	1					
7	5VU–1465U–00	PLACA, DE PROTECTOR 3	1					
8	5RU–14799–00	TAPA	1					
9	4B5–14629–00	SOPORTE DE PROTECTOR	1					
10	90480–10332	TAPON	2					
11	90111–06020	TORNILLO	1					
12	5GM–14766–00	ARANDELA DE PROTECTOR	12					
13	90111–06015	TORNILLO	9					
14	90480–12581	TAPON	2					
15	90387–06023	ESPACIADOR	2					
16	90201–062G3	ARANDELA PLANA	2					
17	98980–06010	TORNILLO DE LIGAR	3					
18	36Y–27424–01	AMORTIGUADOR DE APOYAPIE 2	1					
19	90387–10046	ESPACIADOR	1					
20	4B5–14718–00	PROTECTOR DE SILENCIADOR 1	1					
21	22W–24181–00	AMORTIGUADOR DE MONTAJE 1	2					
22	4B5–8592A–00	SENSOR	1					
23	4B5–14728–00	PROTECTOR DE SILENCIADOR	1					
24	4B5–14738–00	PROTECTOR DE SILENCIADOR 3	1					
25	4B5–1465V–00	PLACA, DE PROTECTOR 4	1					
26	4BR–14613–00	JUNTA, TUBO DE ESCAPE	2					
27	95602–08200	TUERCA DE AUTO-CIERRE	4					

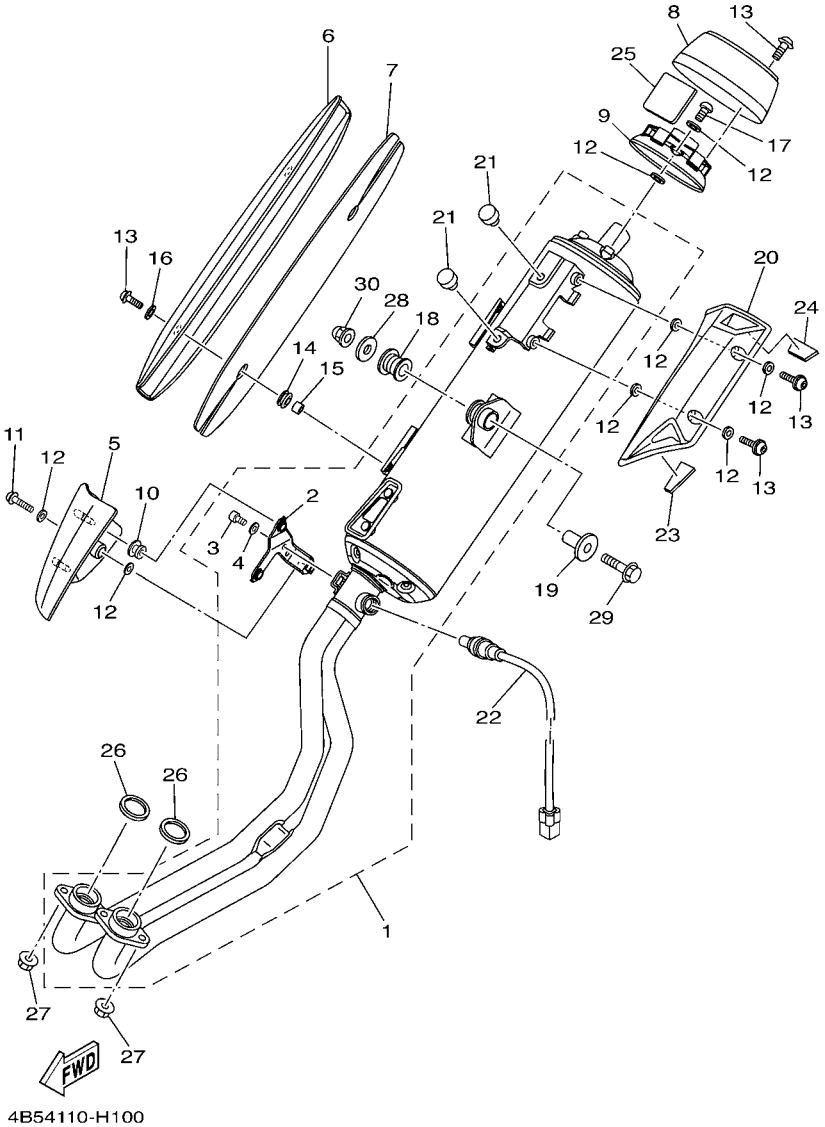

FIG. 10 DESCARGA

REF. Nº	CODIGO Nº	DESCRIPCION	4B5V					OBSERVACIONES
28	90201–10043	ARANDELA PLANA	1					
29	95812–10040	TORNILLO DE REBORDE	1					
30	90176–10075	TUERCA CORONA	1					

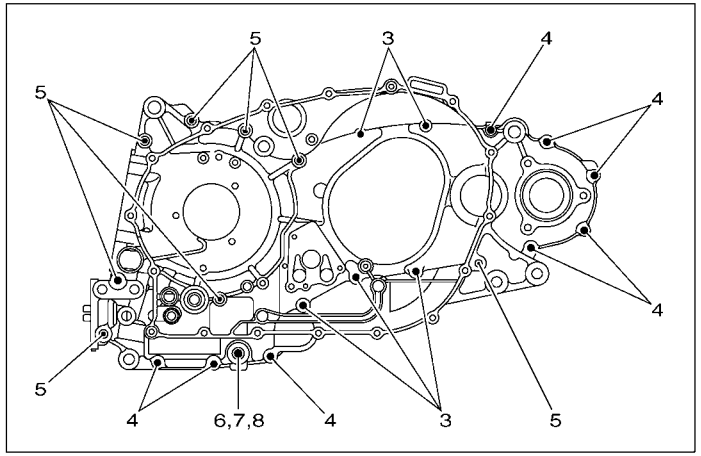

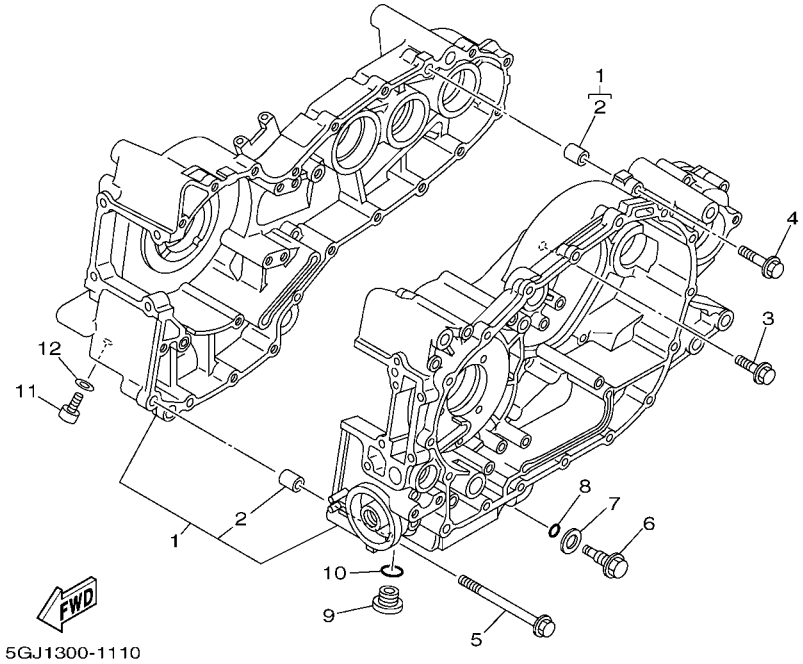

FIG. 11 CARTER

REF. Nº	CODIGO Nº	DESCRIPCION	4B5V					OBSERVACIONES
1	4B5–15100–09	CARTER COMPLETO	1					
2	99530–10114	.PASADOR, DE ESPIGA	2					
3	95022–06035	PERNO, DE BRIDA	5					
4	95022–06050	PERNO, DE BRIDA	8					
5	95022–08110	PERNO, DE BRIDA	8					
6	15B–15481–00	PERNO 1	1					
7	214–11198–01	EMPAQUE	1					
8	93210–48364	ANILLO O	1					
9	4H7–15189–00	TAPON	1					
10	93210–22382	ANILLO O	1					
11	90110–08077	TORNILLO ALLEN	1					
12	90430–08119	JUNTA	1					

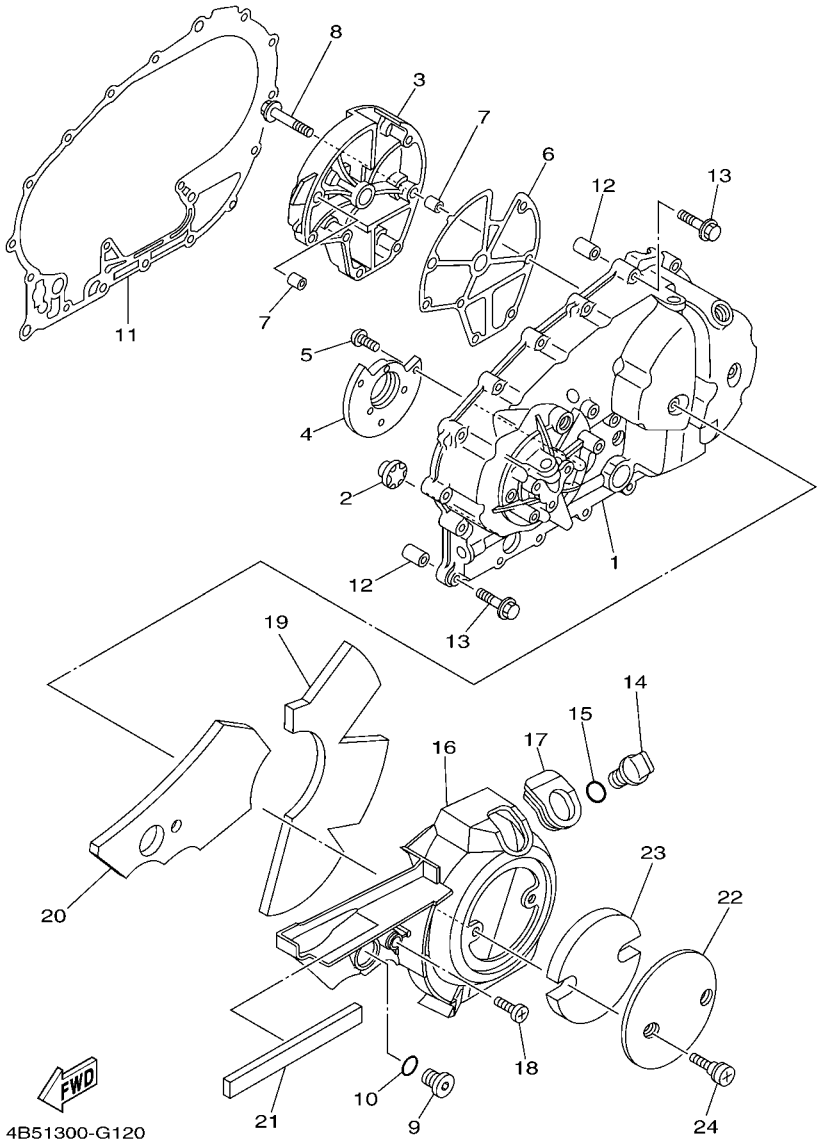

FIG. 12 CUBIERTA DE CARTER 1

REF. Nº	CODIGO Nº	DESCRIPCION	4B5V					OBSERVACIONES
1	5GJ–15411–02	CUBIERTA DE CARTER 1	1					
2	2H7–15361–00	MEDIDOR DE NIVEL	1					
3	5GJ–15414–00	CUBIERTA 1	1					
4	5GJ–15417–00	CUBIERTA DE TAPA	1					
5	90149–06082	TORNILLO DE REGLAJE	3					
6	5GJ–15453–01	EMPAQ	1					
7	99530–10114	PASADOR, DE ESPIGA	2					
8	95022–06035	PERNO, DE BRIDA	7					
9	36Y–15189–00	TAPON	1					
10	93210–16325	ANILLO O	1					
11	5GJ–15451–01	EMPAQ DE CUBIERTA DE CARTER	1					
12	99530–10114	PASADOR, DE ESPIGA	2					
13	95022–06035	PERNO, DE BRIDA	19					
14	5GJ–15363–10	TAPON DE ACEITE	1					
15	93210–19123	ANILLO O	1					
16	4B5–15415–00	CUBIERTA DE GENERADOR	1					
17	5GJ–15486–00	ANILLO PROTECTOR	1					
18	3KJ–15481–00	PERNO 1	1					
19	4B5–15316–00	AMORTIGUADOR 1	1					
20	4B5–15335–00	AMORTIGUADOR 3	1					
21	5GJ–15337–00	COLLAR	1					
22	5GJ–15499–10	PROTECTOR	1					
23	5GJ–15789–00	AMORTIGUADOR	1					
24	3KJ–15481–00	PERNO 1	2					

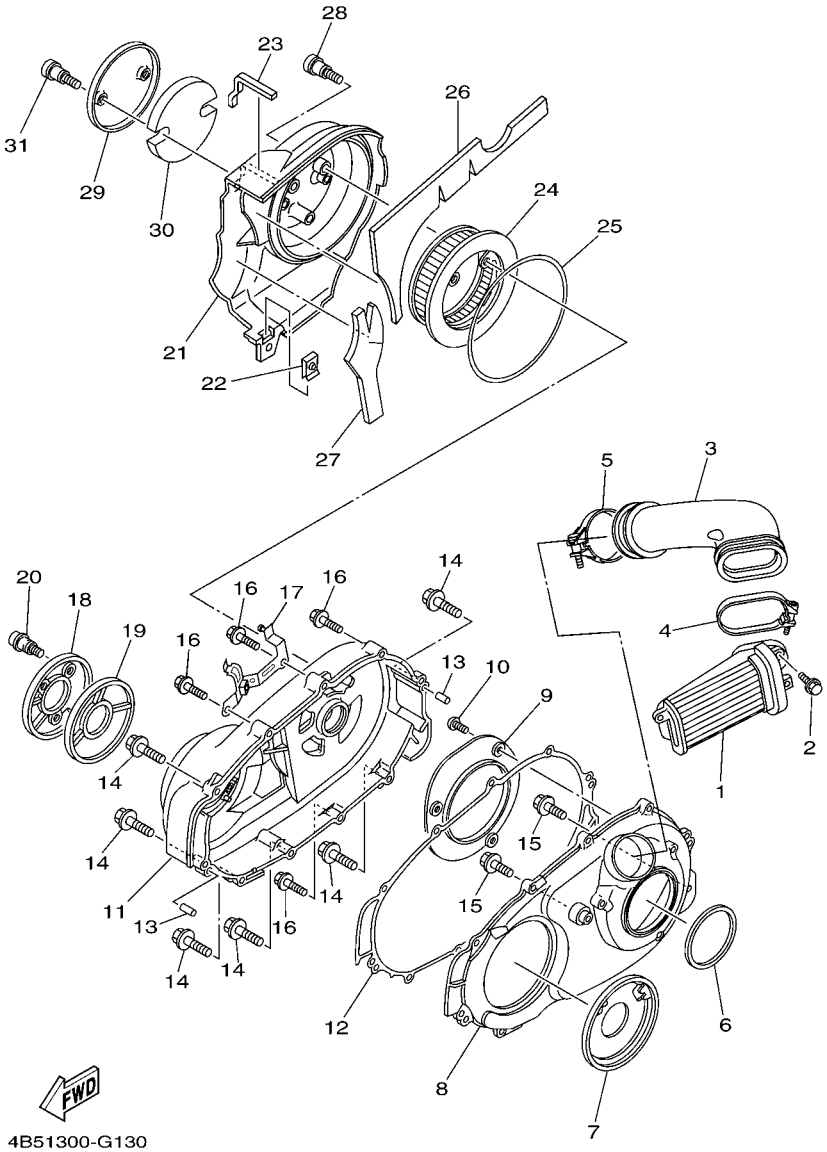

FIG. 13 CUBIERTA DE CARTER 2

REF. Nº	CODIGO Nº	DESCRIPCION	4B5V					OBSERVACIONES
1	4B5–15407–00	ELEMENTO 1	1					
2	95822–06020	TORNILLO DE REBORDE	2					
3	4B5–15473–00	CONDUCTO DE AIRE	1					
4	90450–01001	BRIDA, MANGUERA	1					
5	90450–72005	BRIDA, MANGUERA	1					
6	5GJ–15474–00	SELLO DE CONDUCTO DE AIRE	1					
7	15B–15191–00	PLACA	1					
8	5GJ–15431–00	CUBIERTA DE CARTER 3	1					
9	5GJ–15113–00	PLACA	1					
10	92012–06014	PERNO	3					
11	5GJ–15421–01	TAPA DE CARTER DERECHA	1					
12	5GJ–15461–01	JUNTA TAPA CARTER DERECHO 2	1					
13	99480–08020	PASADOR	2					
14	95022–08040	PERNO, DE BRIDA	6					
15	95022–08025	PERNO, DE BRIDA	2					
16	95022–06035	PERNO, DE BRIDA	4					
17	4B5–26279–01	GUIA DE CABLE	1					
18	4B5–15492–00	CUBIERTA	1					
19	5GJ–1542A–00	AMORTIGUADOR 1	1					
20	3KJ–15481–00	PERNO 1	3					
21	4B5–15423–00	CUBIERTA 2	1					
22	90183–05042	TUERCA DE RESORTE	1					
23	3CV–28378–00	COJIN	1					
24	5GJ–15408–00	ELEMENTO 2	1					
25	48U–14452–00	SELLO	1					
26	4B5–15326–00	AMORTIGUADOR 2	1					
27	5GJ–1542B–00	AMORTIGUADOR 2	1					

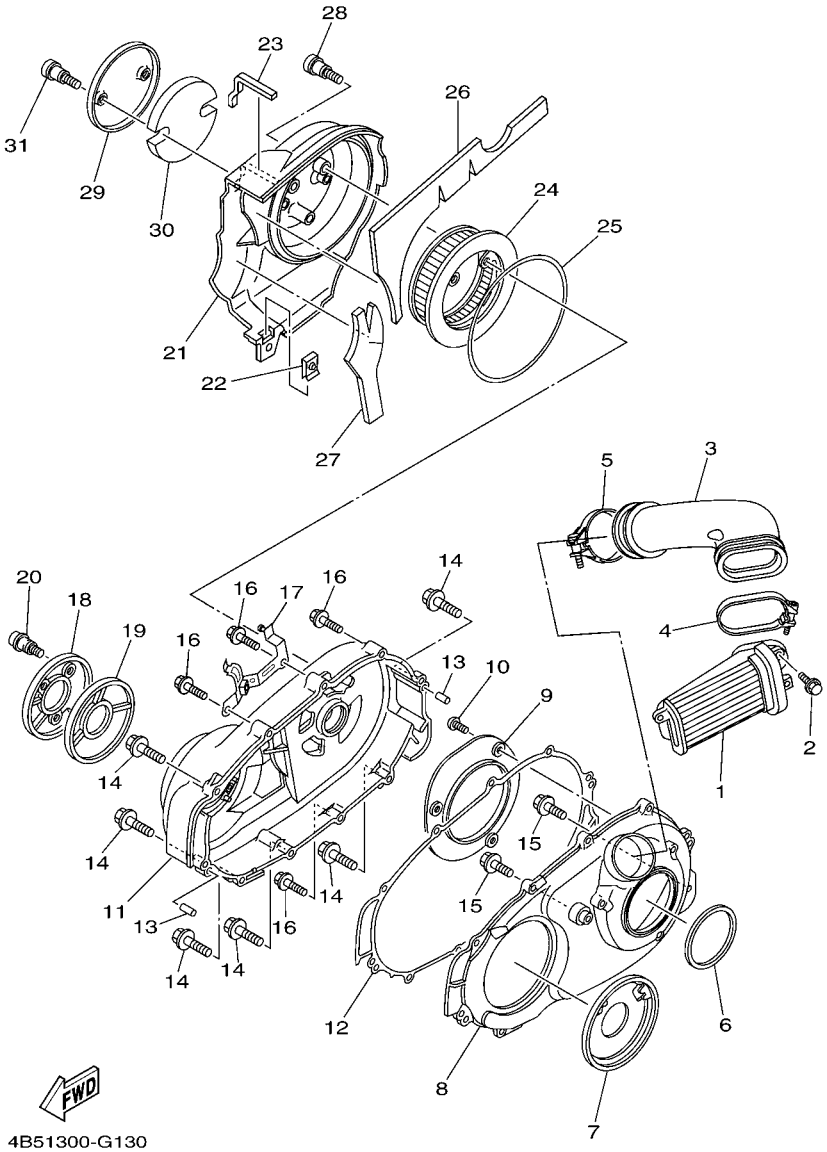

FIG. 13 CUBIERTA DE CARTER 2

REF. Nº	CODIGO Nº	DESCRIPCION	4B5V					OBSERVACIONES
28	3KJ–15481–00	PERNO 1	3					
29	5GJ–15499–10	PROTECTOR	1					
30	5GJ–15789–00	AMORTIGUADOR	1					
31	3KJ–15481–00	PERNO 1	2					

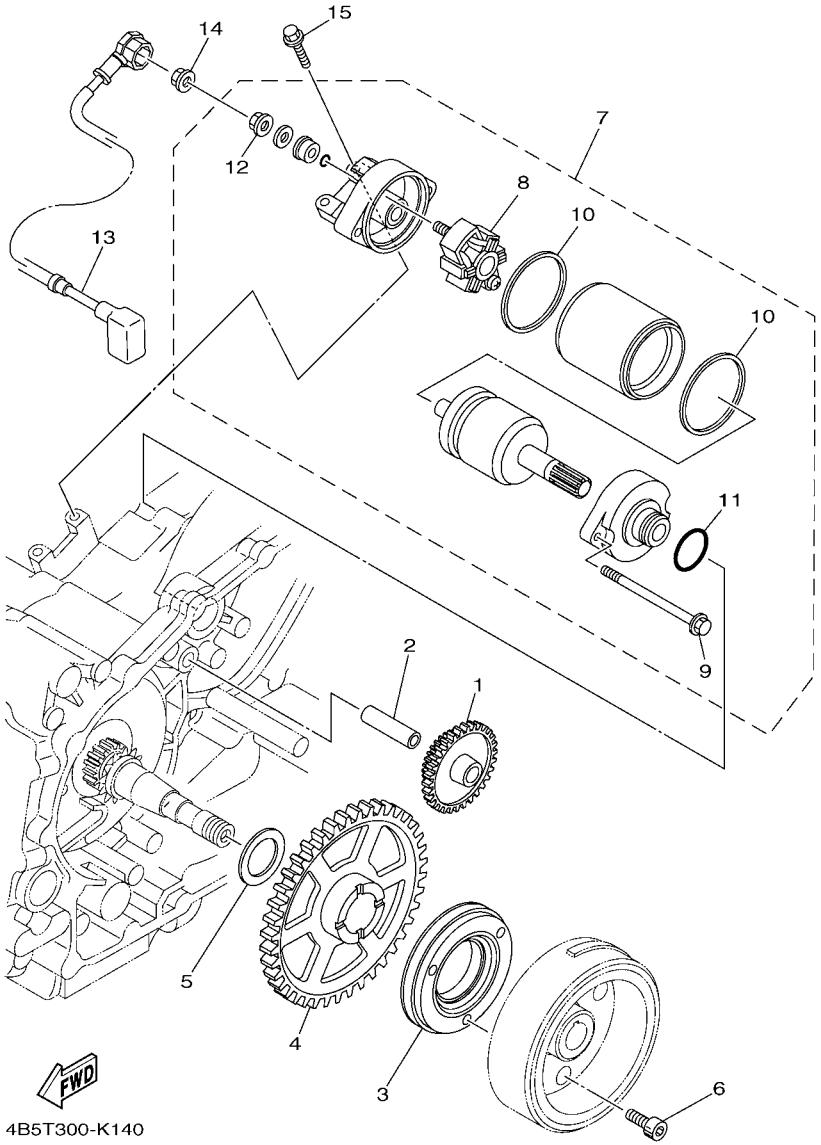

FIG. 14 ARRANQUE

REF. Nº	CODIGO Nº	DESCRIPCION	4B5V					OBSERVACIONES
1	22U–15512–00	ENGRENAJE NEUTRO (12T/50T)	1					
2	36Y–15521–01	EJE 1	1					
3	4NK–15590–00	ENSAMBLE GUIA CADENA ARRANQUE	1					
4	5GJ–15517–00	ENGRENAJE POSICION 2DA	1					
5	90201–25290	ARANDELA PLANA	1					
6	90110–08080	TORNILLO ALLEN	3					
7	4B5–81890–00	MOTOR DE ARRANQUE COMPLETO	1					
8	4B5–81840–00	.SOSTEN DE ESCOBILLA COMPLETO	1					
9	4B5–81826–00	.PERNO	2					
10	4B5–81844–00	.EMPAQUE	2					
11	1FK–81847–00	.ANILLO GOMA	1					
12	4XV–8182A–00	.TUERCA	1					
13	4B5–81815–00	CABLE, MOTOR DE ARRANQUE	1					
14	4XV–8182A–00	TUERCA	1					
15	95812–06025	TORNILLO DE REBORDE	2					

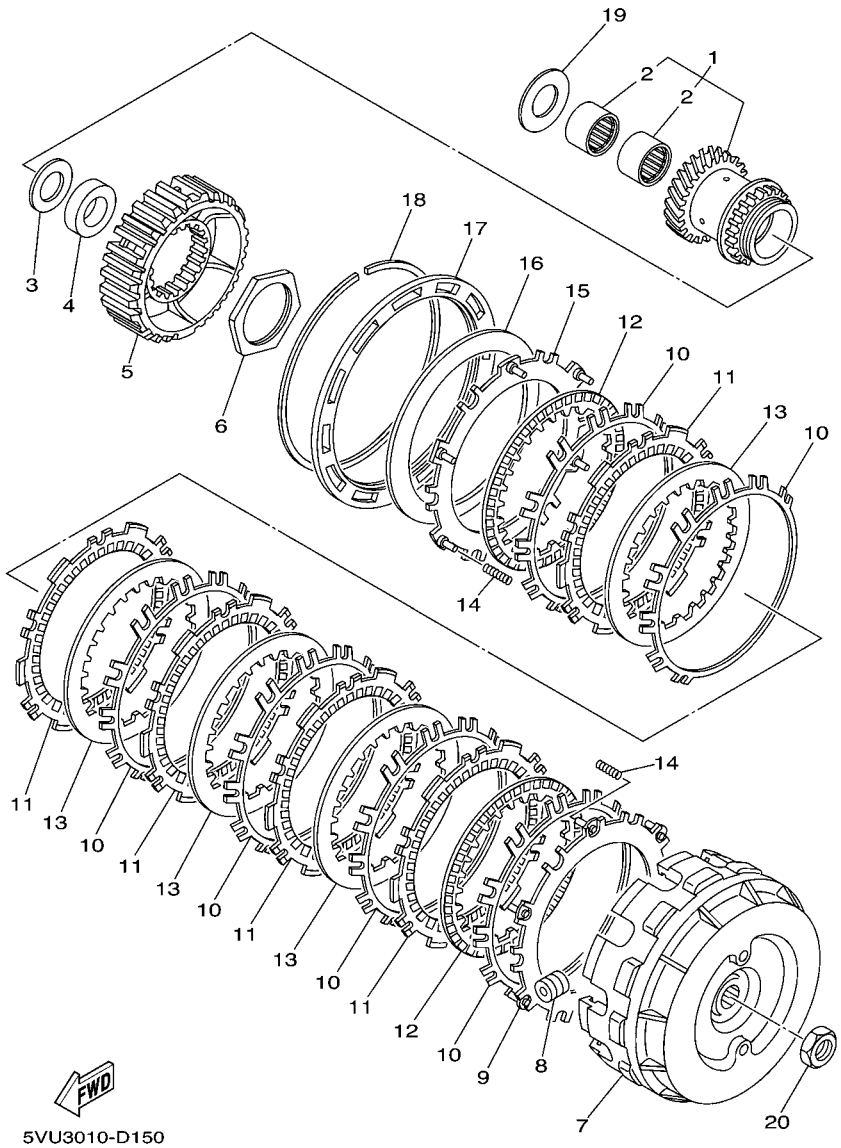

FIG. 15 EMBRAGUE

REF. Nº	CODIGO Nº	DESCRIPCION	4B5V					OBSERVACIONES
1	5VU–16110–00	ENGRANAJE TRACCION PRIM.COMPL.	1					
2	93317–32493	.COJINETE	2					
3	90201–244A9	ARANDELA PLANA	1					
4	90387–20018	ESPACIADOR	1					
5	5VU–16371–00	CUBO, DE EMBRAGUE	1					
6	90170–48003	TUERCA	1					
7	5GJ–16510–10	CAJA DE EMBRAGUE COMPLETO	1					
8	5GJ–16540–00	CONTRAPESO DE RODILLO COMPLETO	12					
9	5GJ–16520–00	PLACA DE CONTRAPESO DE EMPUJE	1					
10	5GJ–16533–00	PRESILLA DE EMBRAGUE	6					
11	5GJ–16321–10	PLACA DE FRICCION	5					
12	5GJ–16325–10	DISCO, DE EMBRAGUE	2					
13	5GJ–16324–00	PLACA DE EMBRAGUE	4					
14	4B5–16539–00	RESORTE	6					
15	5GJ–16550–00	PLACA DE PRESION COMPL.	1					
16	5GJ–16334–00	RESORTE DE EMBRAGUE 2	1					
17	5GJ–16537–00	PLACA TOPE DE RESORTE	1					UR (HOLE 0)
	5GJ–16537–10	PLACA TOPE DE RESORTE	1					UR (HOLE 1)
	5GJ–16537–20	PLACA TOPE DE RESORTE	1					UR (HOLE 2)
	5GJ–16537–30	PLACA TOPE DE RESORTE	1					UR (HOLE 3)
18	5GJ–16529–00	PRESILLA	1					
19	90201–24017	ARANDELA PLANA	1					
20	90170–16326	TUERCA	1					

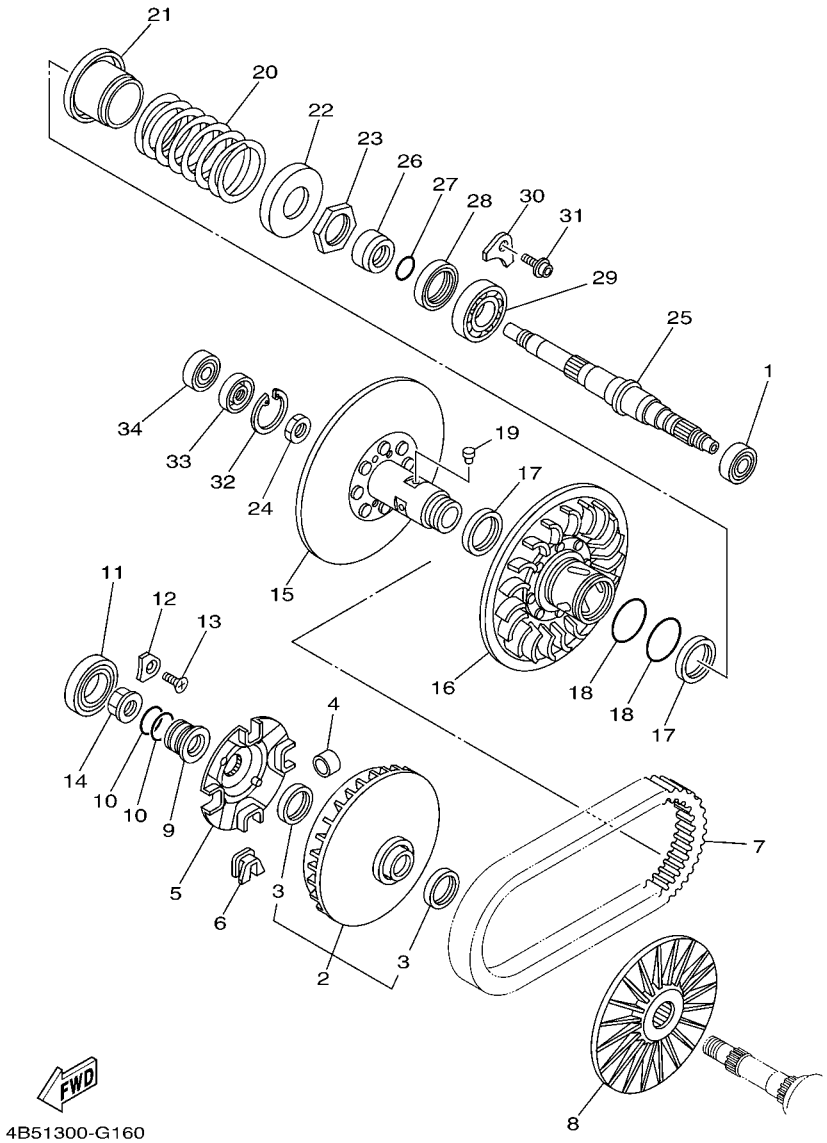

FIG. 16 EMBRAGUE 2

REF. Nº	CODIGO Nº	DESCRIPCION	4B5V					OBSERVACIONES
1	93306–30102	COJINETE	1					
2	4B5–W1760–00	ROLDANA PRIMARIA COMPLETA	1					
3	93101–35001	.SELLO ACEITE	2					
4	5VU–17632–00	CONTRAPESO	8					
5	5VU–17623–00	LEVA	1					
6	5VU–17653–00	CORREDERA	4					
7	5VU–17641–00	CORREA EN V	1					
8	4B5–17611–00	PISCO FIXADOR DE POREA	1					
9	5GJ–17649–00	ESPACIADOR	1					
10	93210–30611	ANILLO O	2					
11	93306–00713	COJINETE	1					
12	4XM–15383–00	PLACA CUBIERTA DE ENGRANAJE	1					
13	90151–06024	TORNILLO EMBUTIDO	1					
14	90179–20013	TUERCA	1					
15	5VU–17660–00	ROLDANA SECUNDARIA FIJA COMPL.	1					
16	5GJ–17670–01	ROLDANA SECUNDARIA CORREDIZA	1					
17	93104–41119	SELLO ACEITE	2					
18	93210–44545	ANILLO O	2					
19	4CW–17664–00	PASADOR DE GUIA	4					
20	90501–600A0	RESORTE DE COMPRESION	1					
21	5GJ–17690–00	COMPLETO DE ASIENTO DE MUELLE	1					
22	4WV–17644–00	ASIENTO DE RESORTE	1					
23	90170–36279	TUERCA	1					
24	90170–18221	TUERCA	1					
25	5VU–17681–00	EJE SECUNDARIO	1					
26	90387–26001	ESPACIADOR	1					
27	93210–26001	ANILLO O	1					

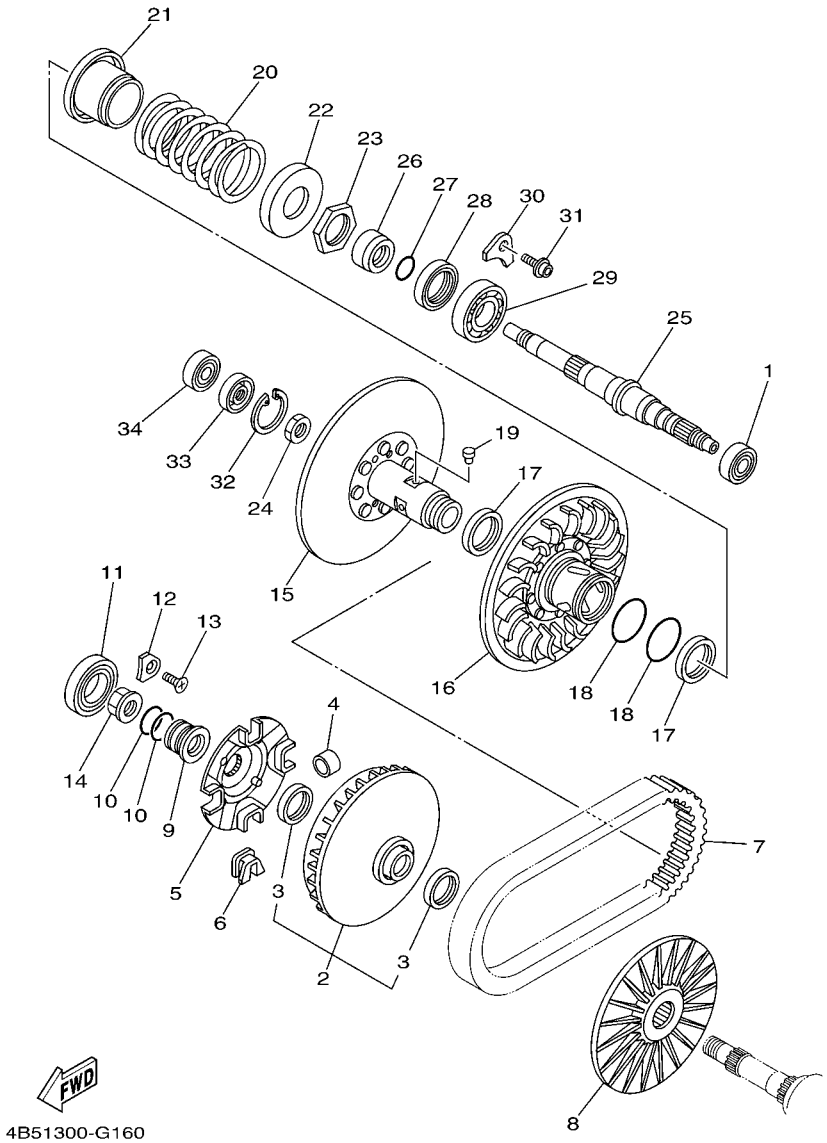

FIG. 16 EMBRAGUE 2

REF. Nº	CODIGO Nº	DESCRIPCION	4B5V					OBSERVACIONES
28	93102–42004	SELLO ACEITE	1					
29	93306–20651	COJINETE	1					
30	5GJ–15383–00	PLACA CUBIERTA DE ENGRANAJE	2					
31	90110–06036	TORNILLO ALLEN	2					
32	99009–42500	PRESILLA REDONDA	1					
33	93102–15004	SELLO ACEITE	1					
34	93306–30217	COJINETE	1					

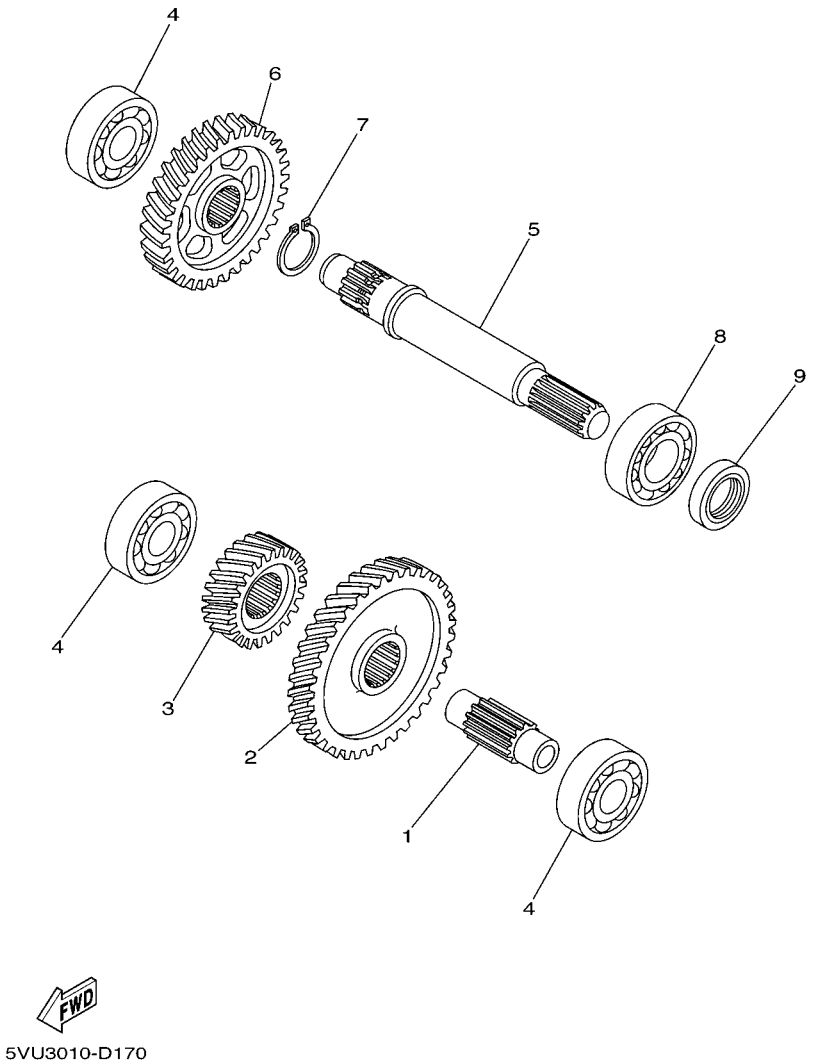

FIG. 17 TRANSMISION

REF. Nº	CODIGO Nº	DESCRIPCION	4B5V					OBSERVACIONES
1	5VU–17411–00	EJE PRIMARIO	1					
2	5VU–16151–00	ENGRANAJE TRACC.PRIMARIA(52T)	1					
3	5VU–17111–00	ENGRENAJE DE PINON PRA (22T)	1					
4	93306–30427	COJINETE	3					
5	5GJ–17421–00	EJE SECUNDARIO	1					
6	5GJ–17211–00	ENGRANAJE RUEDA DE 1 RA (36T)	1					
7	99009–25400	PRESILLA REDONDA	1					
8	93306–205A8	COJINETE	1					
9	93102–25064	SELLO ACEITE	1					

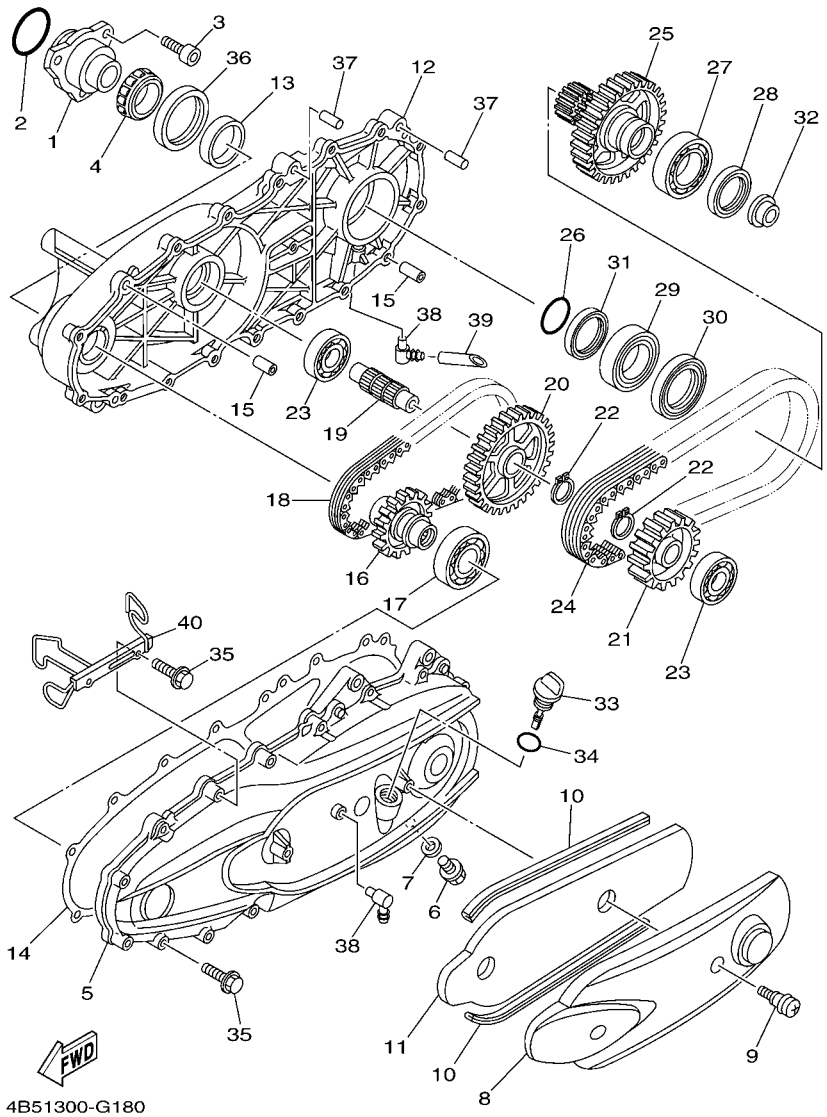

FIG. 18 TRANSMISION SECUNDARIA

REF. Nº	CODIGO Nº	DESCRIPCION	4B5V					OBSERVACIONES
1	15B–17524–00	SOSTEN	1					
2	93210–50553	ANILLO O	1					
3	91312–08020	TORNILLO	3					
4	93332–00086	COJINETE	1					
5	5GJ–17541–10	CAJA 1	1					
6	90340–12006	TORNILLO, DE DRENAJE	1					
7	812–11198–00	EMPAQUE	1					
8	5GJ–15418–00	CUBIERTA CAJA DE CADENA	1					
9	3KJ–15481–00	PERNO 1	2					
10	5GJ–15335–00	AMORTIGUADOR 3	2					
11	5VU–15338–00	AMORTIGUAFDOR 5	1					
12	5GJ–17542–10	CAJA 2	1					
13	5GJ–17554–00	RETEN DE COJINETE	1					
14	5GJ–17818–02	EMPAQUE	1					
15	99530–10114	PASADOR, DE ESPIGA	2					
16	5GJ–17451–00	ENGRENAJE DE TRACCION (25T)	1					
17	93306–20637	COJINETE	1					
18	5GJ–16139–00	CADENA PRIMARIA	1					
19	5GJ–17523–00	EJE	1					
20	5GJ–17452–00	ENGRENAJE DE TRACCION (41T)	1					
21	5GJ–17459–00	CORONA (29T)	1					
22	99009–25400	PRESILLA REDONDA	2					
23	93306–30427	COJINETE	2					
24	5GJ–11456–00	CADENA PRIMARIA	1					
25	4B5–17469–00	CORONA(40T)	1					
26	93210–34504	ANILLO O	1					
27	93306–00807	COJINETE	1					

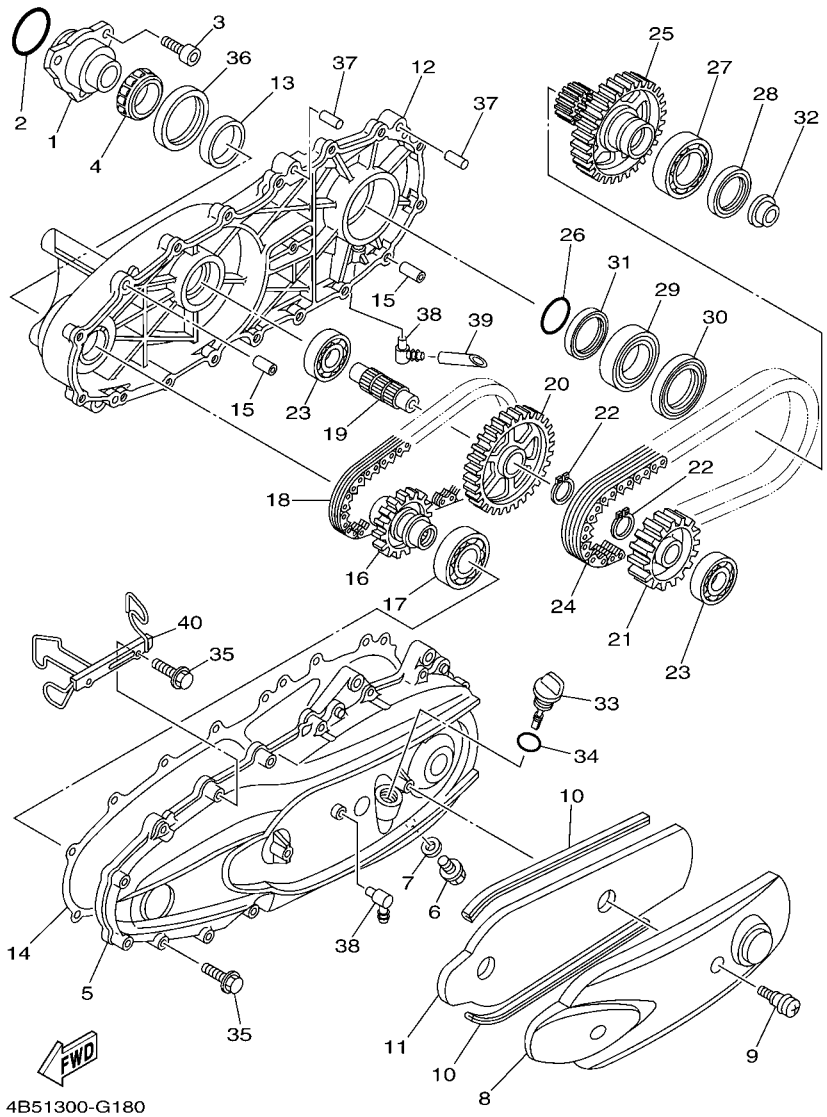

FIG. 18 TRANSMISION SECUNDARIA

REF. Nº	CODIGO Nº	DESCRIPCION	4B5V					OBSERVACIONES
28	93102–40021	SELLO ACEITE	1					
29	93306–00808	COJINETE	1					
30	93102–48004	SELLO ACEITE	1					
31	93105–45017	SELLO ACEITE	1					
32	15B–46153–00	COLLAR DE GUIA	1					
33	5GJ–15362–01	TAPON DEL NIVEL DE ACEITE	1					
34	93210–19123	ANILLO O	1					
35	95022–06035	PERNO, DE BRIDA	18					
36	93102–55004	SELLO ACEITE	1					
37	93608–30002	PASADOR DE CLAVIJA	2					
38	3ES–15371–00	RESPIRADERO	2					
39	5GJ–1531A–00	MANGUELA DE RESPIRADERO 1	1					
40	4B5–2587A–01	SOPORTE DE MANGUERA FRENO	1					

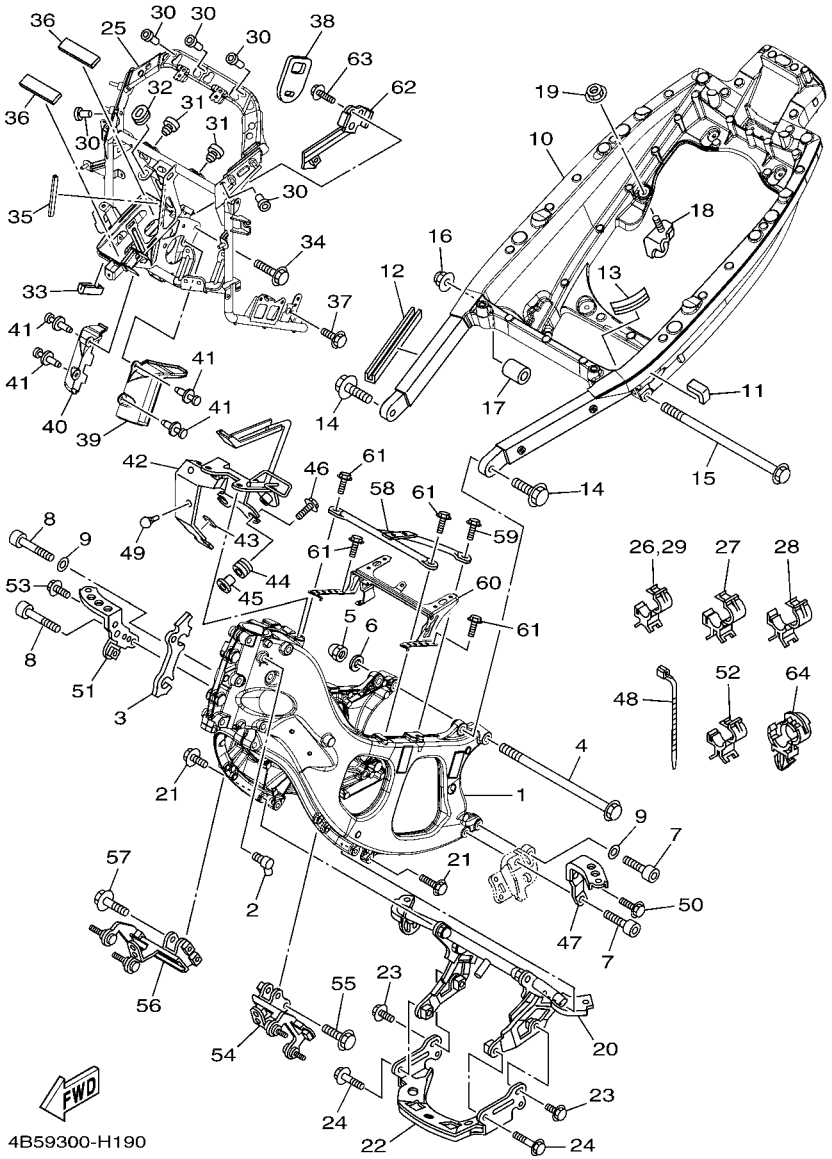

FIG. 19 CUADRO

REF. Nº	CODIGO Nº	DESCRIPCION	4B5V					OBSERVACIONES
1	4B5–21110–02	ARMAZON COMPLETO	1					
2	5VX–21279–10	TAPON CIEGO	1					
3	4B5–2113B–00	AMORTIGUADOR	1					
4	90105–12787	TORNILLO	1					
5	90176–12002	TUERCA CORONA	1					
6	90201–12043	ARANDELA PLANA	1					
7	90110–10021	TORNILLO ALLEN	2					
8	90110–10022	TORNILLO ALLEN	2					
9	90201–10037	ARANDELA PLANA	2					
10	4B5–21190–01	CUADRO TRASERO COMPLETA	1					
11	4D9–2174X–00	AMORTIGUADOR	1					
12	4B5–2171H–00	GUIA	1					
13	31A–24188–01	MOLDURA DEPOSITO COMBUST.	1					
14	90105–12058	TORNILLO	2					
15	90105–12052	TORNILLO	1					
16	95602–12200	TUERCA DE AUTO-CIERRE	1					
17	4B5–21116–00	COLLAR	1					
18	4B5–21445–00	SOPORTE DE SILENCIADOR 1	1					
19	95602–10200	TUERCA DE AUTO-CIERRE	1					
20	4B5–2142K–01	SOPORTE	1					
21	95812–08030	TORNILLO DE REBORDE	4					
22	4B5–2117G–00	PROTECTOR	1					
23	95802–06010	TORNILLO DE REBORDE	2					
24	95802–06025	TORNILLO DE REBORDE	2					
25	4B5–28356–40	SOPORTE 1	1					
26	90464–10190	BRIDA	1					
27	90464–25217	BRIDA	2					

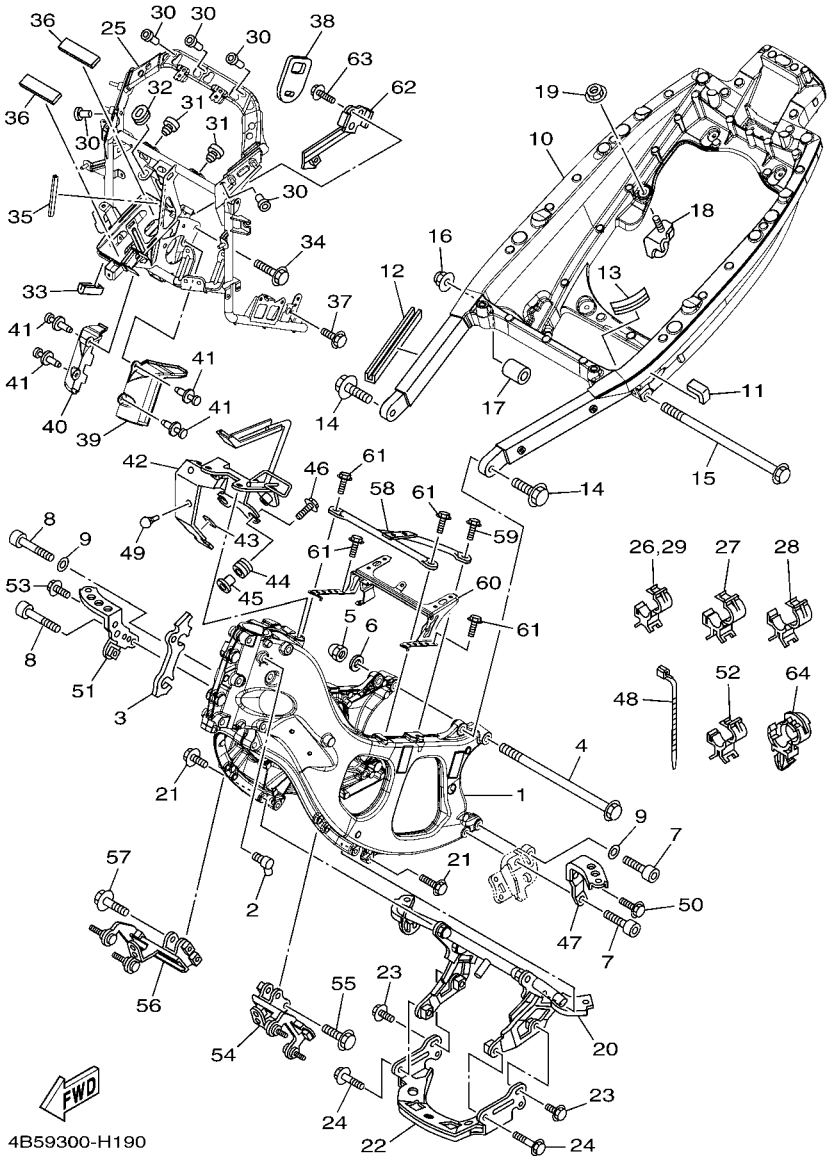

FIG. 19 CUADRO

REF. Nº	CODIGO Nº	DESCRIPCION	4B5V					OBSERVACIONES
28	90464–30252	BRIDA	6					
29	90464–10190	BRIDA	1					
30	90179–05523	TUERCA	5					
31	22W–24741–00	COJIN DE ASIENTO	2					
32	90480–01558	TAPON	1					
33	3VD–24188–00	MOLDURA DEPOSITO COMBUST.	1					
34	95822–10045	TORNILLO DE REBORDE	2					
35	4BP–24188–00	MOLDURA DEPOSITO COMBUST.	1					
36	4B5–2317J–00	AMORTIGUADOR 1	2					
37	95822–08020	TORNILLO DE REBORDE	2					
38	4B5–2139W–00	CUBIERTA	1					
39	4B5–2117F–00	CUBIERTA	1					
40	4B5–2117M–00	CUBIERTA	1					
41	90269–07077	REMACHE	4					
42	4B5–21147–11	SOPORTE	1					
43	4B5–2112J–00	AMORTIGUADOR 4	1					
44	90480–13003	TAPON	2					
45	90560–06201	SEPARADOR	2					
46	95822–06016	TORNILLO DE REBORDE	2					
47	4B5–2141A–00	SOPORTE 1	1					
48	90464–13077	BRIDA	1					
49	90338–05009	TAPON	1					
50	95822–08016	TORNILLO DE REBORDE	1					
51	4B5–2141E–00	SOPORTE 2	1					
52	90464–20191	BRIDA	1					
53	95822–08016	TORNILLO DE REBORDE	1					
54	4B5–2144H–00	SOPORTE DE APOYAPIE 3	1					

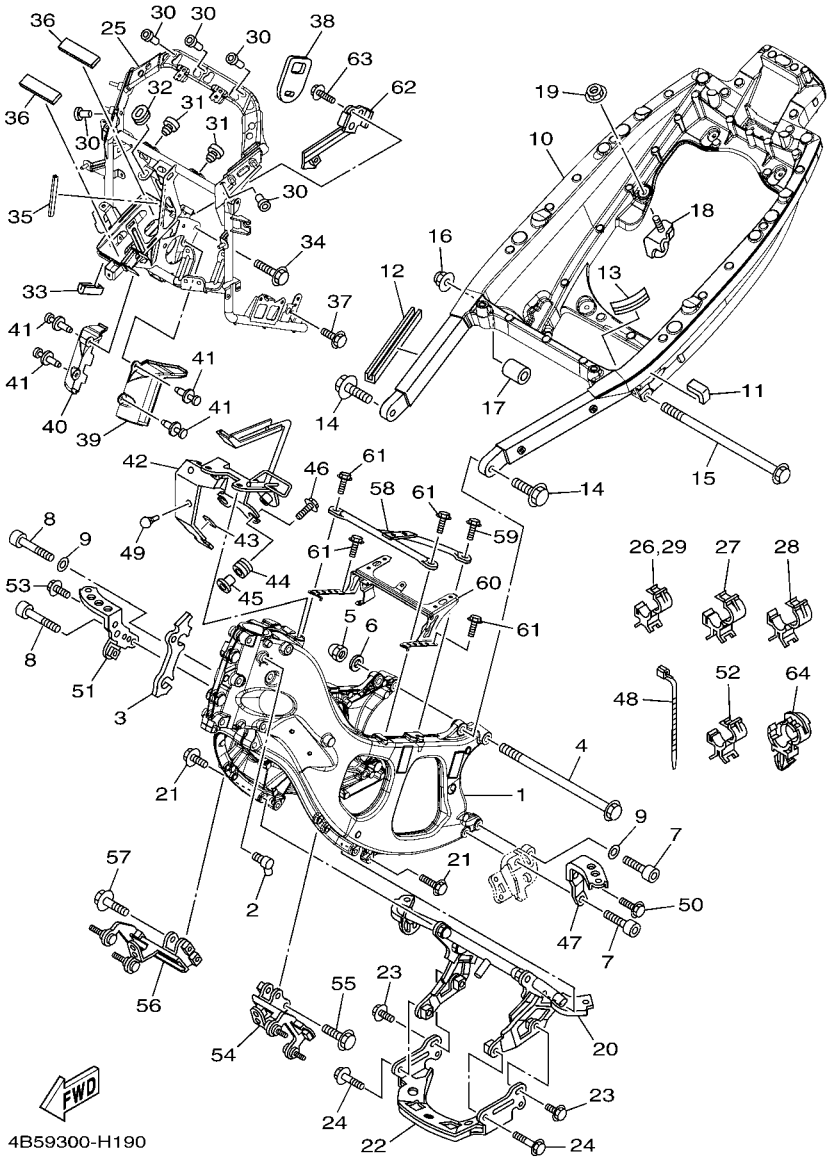

FIG. 19 CUADRO

REF. Nº	CODIGO Nº	DESCRIPCION	4B5V					OBSERVACIONES
55	95812–08030	TORNILLO DE REBORDE	2					
56	4B5–2145H–00	SOPORTE DE APOYAPIE 4	1					
57	95812–08030	TORNILLO DE REBORDE	2					
58	4B5–2119A–00	TUBO 6	1					
59	90119–06186	TORNILLO CON ARANDELA	1					
60	4B5–21345–01	SOPORTE ACCESORIO DE DEPOSITO	1					
61	90119–06186	TORNILLO CON ARANDELA	4					
62	4B5–2117A–00	SOPORTE	1					
63	95822–06012	TORNILLO DE REBORDE	2					
64	90464–32002	BRIDA	1					

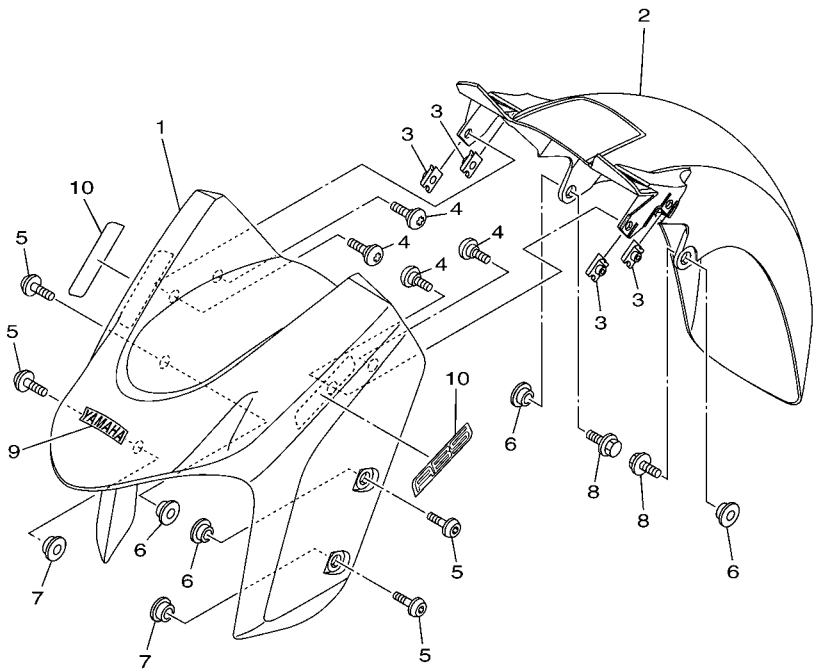

4B56300-G200

FIG. 20 GUARDABARRO

REF. Nº	CODIGO Nº	DESCRIPCION	4B5V					OBSERVACIONES
1	4B5–21511–00–P3	GUARDABARRO DELANTERO	1					UR PARA SMX
	4B5–21511–00–P7	GUARDABARRO DELANTERO	1					UR PARA BWC1
	4B5–21511–00–P5	GUARDABARRO DELANTERO	1					UR PARA NMJ
2	4B5–21556–00	GUARDABARRO, DELANTERO 2	1					
3	90183–060A6	TUERCA DE RESORTE	4					
4	90149–06117	TORNILLO DE REGLAJE	4					
5	90111–06097	TORNILLO	4					
6	90387–06153	ESPACIADOR	4					
7	90387–08079	ESPACIADOR	2					
8	95802–06016	TORNILLO DE REBORDE	2					
9	3WF–2153E–70	EMBLEMA, YAMAHA	1					UR PARA SMX
	3WF–2153E–40	EMBLEMA, YAMAHA	1					UR PARA BWC1,NMJ
10	5VU–21578–00	EMBLEMA	2					

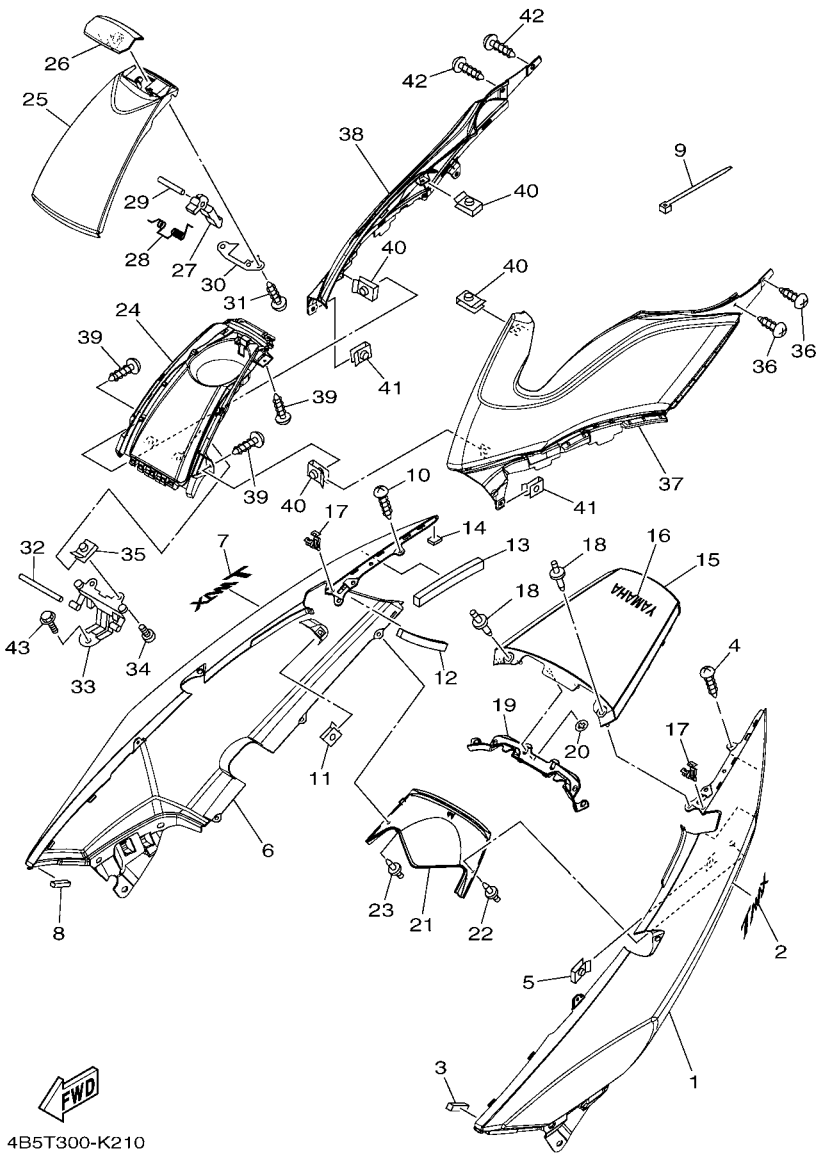

FIG. 21 CUBIERTA LATERAL

REF. Nº	CODIGO Nº	DESCRIPCION	4B5V					OBSERVACIONES
1	4B5–21711–00–P3	CUBIERTA LATERAL 1	1					UR PARA SMX
	4B5–21711–00–P7	CUBIERTA LATERAL 1	1					UR PARA BWC1
	4B5–21711–00–P5	CUBIERTA LATERAL 1	1					UR PARA NMJ
2	5GJ–2173B–20	EMBLEMA 3D	1					
3	4B5–21717–00	AMORTIGUADOR	1					
4	97702–50016	TORNILLO ROSCA HEMBRA	2					
5	90183–05042	TUERCA DE RESORTE	1					
6	4B5–21721–00–P3	CUBIERTA LATERAL 2	1					UR PARA SMX
	4B5–21721–00–P7	CUBIERTA LATERAL 2	1					UR PARA BWC1
	4B5–21721–00–P5	CUBIERTA LATERAL 2	1					UR PARA NMJ
7	5GJ–2173B–20	EMBLEMA 3D	1					
8	4B5–21717–00	AMORTIGUADOR	1					
9	5Y9–12491–00	GRAMPA 1	1					
10	97702–50016	TORNILLO ROSCA HEMBRA	2					
11	90183–05042	TUERCA DE RESORTE	1					
12	4B5–2174X–00	AMORTIGUADOR	1					
13	4B5–2174Y–00	AMORTIGUADOR	1					
14	4B5–21747–00	AMORTIGUADOR	1					
15	4B5–2171A–00–P3	CUBIERTA, TECHO	1					UR PARA SMX
	4B5–2171A–00–P7	CUBIERTA, TECHO	1					UR PARA BWC1
	4B5–2171A–00–P5	CUBIERTA, TECHO	1					UR PARA NMJ
16	99247–00080	EMBLEMA, YAMAHA	1					UR PARA SMX
	99244–00080	EMBLEMA, YAMAHA	1					UR PARA BWC1,NMJ
17	90468–040A0	PRESILLA	2					
18	90269–06008	REMACHE	2					
19	4B5–2175N–00	CUBIERTA DE BRIDA	1					
20	90183–05M02	TUERCA DE RESORTE	6					

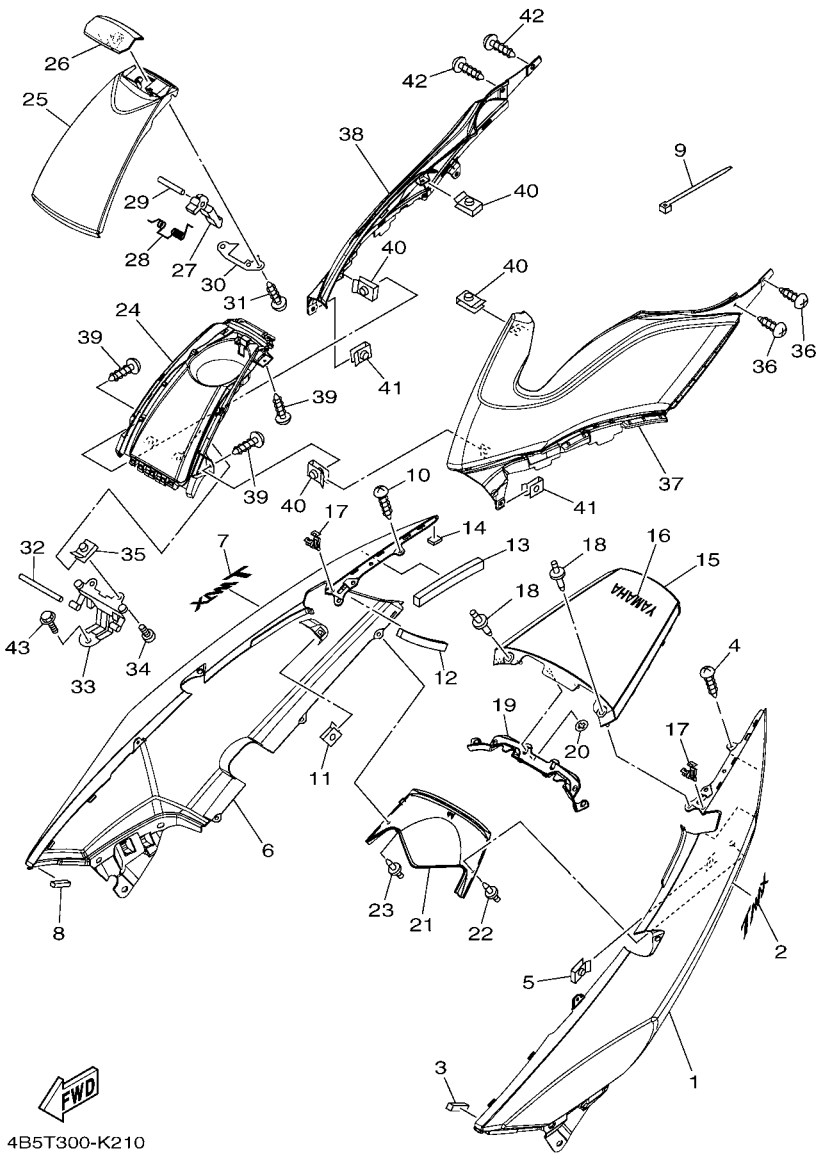

FIG. 21 CUBIERTA LATERAL

REF. Nº	CODIGO Nº	DESCRIPCION	4B5V					OBSERVACIONES
21	4B5–2177B–00	TAPA, CUBIERTA	1					
22	90269–06001	REMACHE	1					
23	90269–06001	REMACHE	1					
24	4B5–2473F–00	FUNDA DE SILLIN COMPLETO	1					
25	4B5–2473T–01–33	TAPA 1	1					YB PARA SMX,NMJ
	4B5–2473T–01–P0	TAPA 1	1					MBL2 PARA BWC1
26	4B5–2477F–00	PALANCA, DE ASIENTO	1					
27	5GJ–24754–01	GANCHO DE ASIENTO	1					
28	4HC–24758–00	RESORTE	1					
29	93603–50195	PASADOR DE CLAVIJA	1					
30	4B5–24217–00	CUBIERTA	1					
31	97702–40010	TORNILLO ROSCA HEMBRA	2					
32	5GJ–24774–00	PASADOR	1					
33	4B5–24762–00	REFUERZO	1					
34	98902–05010	TORNILLO DE AJUSTE	2					
35	90183–050A7	TUERCA DE RESORTE	2					
36	97702–50016	TORNILLO ROSCA HEMBRA	2					
37	4B5–24129–01–33	CUBIERTA LATERAL 1	1					YB PARA SMX,NMJ
	4B5–24129–01–P0	CUBIERTA LATERAL 1	1					MBL2 PARA BWC1
38	4B5–24139–01–33	CUBIERTA LATERAL 2	1					YB PARA SMX,NMJ
	4B5–24139–01–P0	CUBIERTA LATERAL 2	1					MBL2 PARA BWC1
39	97702–40010	TORNILLO ROSCA HEMBRA	4					
40	90183–040A0	TUERCA DE RESORTE	4					
41	90183–05042	TUERCA DE RESORTE	2					
42	97702–50016	TORNILLO ROSCA HEMBRA	6					
43	95802–06010	TORNILLO DE REBORDE	1					

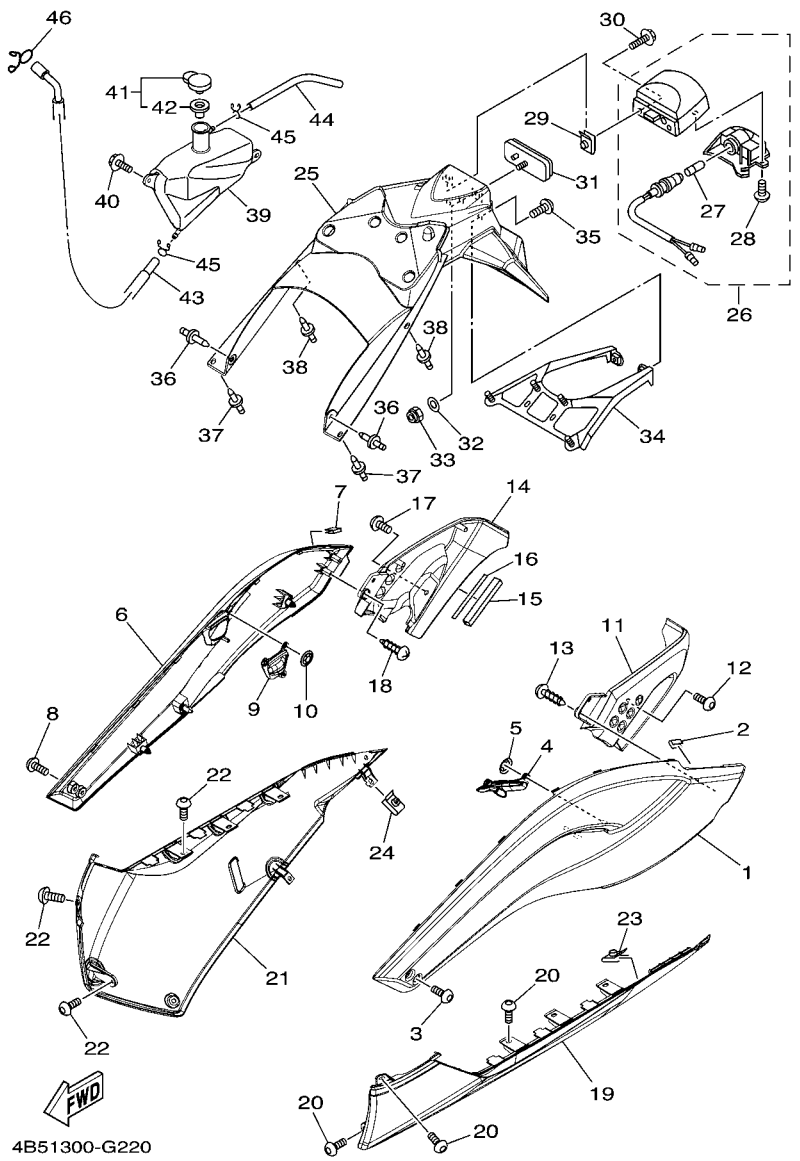

FIG. 22 CUBIERTA LATERAL 2

REF. Nº	CODIGO Nº	DESCRIPCION	4B5V					OBSERVACIONES
1	4B5–21731–00–P2	TAPA LATERAL 3	1					MBL2 PARA SMX
	4B5–21731–00–P4	TAPA LATERAL 3	1					SMX PARA BWC1,NMJ
2	4B5–21732–00	SELLO 1	1					
3	92014–06014	PERNO	2					
4	4B5–27475–00	TAPA 1	1					
5	90183–05M02	TUERCA DE RESORTE	3					
6	4B5–21741–00–P2	TAPA LATERAL 4	1					MBL2 PARA SMX
	4B5–21741–00–P4	TAPA LATERAL 4	1					SMX PARA BWC1,NMJ
7	4B5–21732–00	SELLO 1	1					
8	92014–06014	PERNO	2					
9	4B5–27476–00	MANGUERA 2	1					
10	90183–05M02	TUERCA DE RESORTE	3					
11	4B5–27413–00	CUBIERTA DE APOYAPIE	1					
12	90110–06200	TORNILLO ALLEN	1					
13	97702–50016	TORNILLO ROSCA HEMBRA	2					
14	4B5–27423–00	CUBIERTA DE APOYAPIE	1					
15	5KE–28345–10	MOLDURA 1	1					
16	4B5–21669–00	SELLO	1					
17	90110–06200	TORNILLO ALLEN	1					
18	97702–50016	TORNILLO ROSCA HEMBRA	2					
19	4B5–2171L–00–P1	MUELLE , CUBIERTA LATERAL 1	1					UR PARA SMX
	4B5–2171L–00–P8	MUELLE , CUBIERTA LATERAL 1	1					UR PARA BWC1
	4B5–2171L–00–P5	MUELLE , CUBIERTA LATERAL 1	1					UR PARA NMJ
20	90167–05076	TORNILLO DE ROSCA HEMBRA	6					
21	4B5–2171M–01–P1	MUELLE, CUBIERTA LATERAL 2	1					UR PARA SMX
	4B5–2171M–01–P8	MUELLE, CUBIERTA LATERAL 2	1					UR PARA BWC1
	4B5–2171M–01–P5	MUELLE, CUBIERTA LATERAL 2	1					UR PARA NMJ

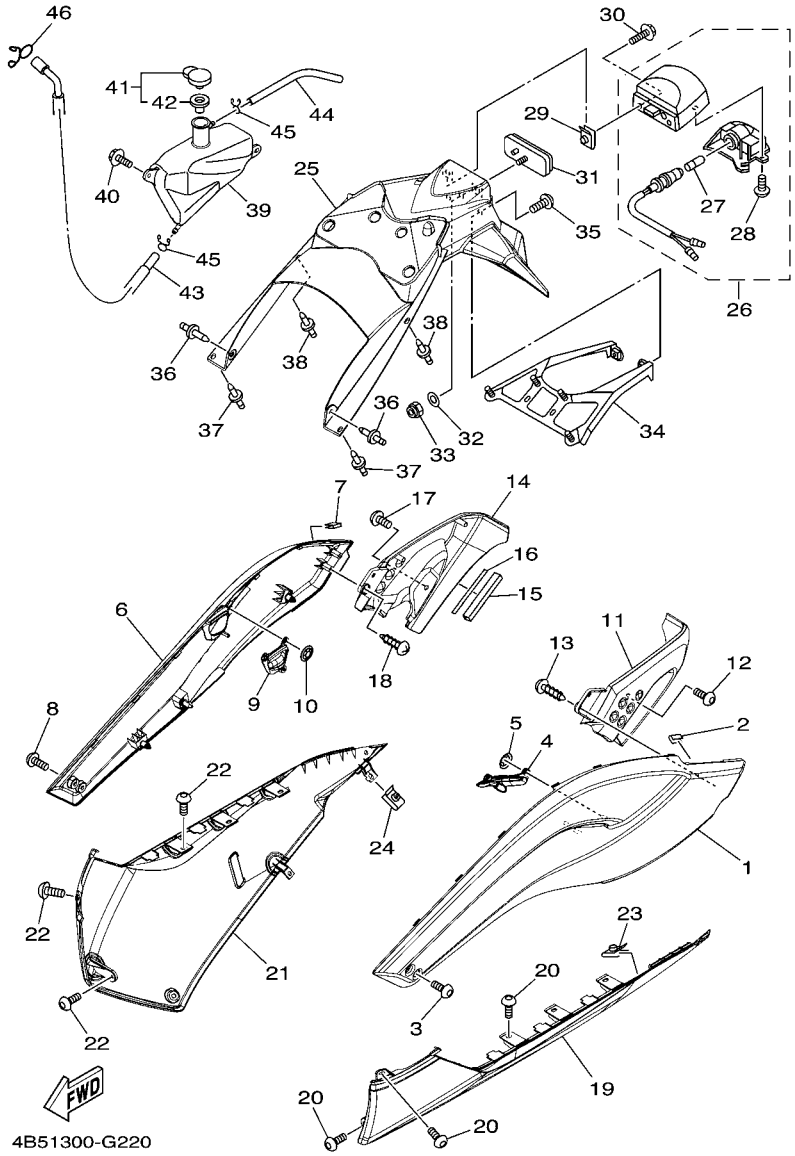

FIG. 22 CUBIERTA LATERAL 2

REF. Nº	CODIGO Nº	DESCRIPCION	4B5V					OBSERVACIONES
22	90167–05076	TORNILLO DE ROSCA HEMBRA	6					
23	90183–05042	TUERCA DE RESORTE	1					
24	90183–050A6	TUERCA DE RESORTE	1					
25	4B5–2152R–00	GUARDABARRO DELANTERO	1					
26	4B5–84745–00	UNIDAD DE LUZ DE LICENCIA COMP	1					
27	4HC–84744–00	.BOMBILLA (12V-5W)	1					
28	97707–40612	.TORNILLO ROSCA HEMBRA	2					
29	90183–05014	TUERCA DE RESORTE	2					
30	90119–05023	TORNILLO CON ARANDELA	2					
31	3Y6–85130–02	REFLECTOR TRASERO COMPLETO	1					
32	90201–05043	ARANDELA PLANA	1					
33	95602–05100	TUERCA U	1					
34	4B5–2172K–00	SOSTEN	1					
35	90111–06109	TORNILLO	2					
36	90269–06001	REMACHE	2					
37	90269–06001	REMACHE	2					
38	90269–06001	REMACHE	2					
39	4B5–21871–00	TANQUE DE RECUPERACION	1					
40	90119–06137	TORNILLO CON ARANDELA	2					
41	1AA–21815–00	TAPON	1					
42	1AA–21874–00	.CUNA	1					
43	4B5–21816–00	TUBO 1	1					
44	90445–09094	TUBO (L210)	1					
45	90467–090A2	PRESILLA	2					
46	90467–100A1	PRESILLA	1					

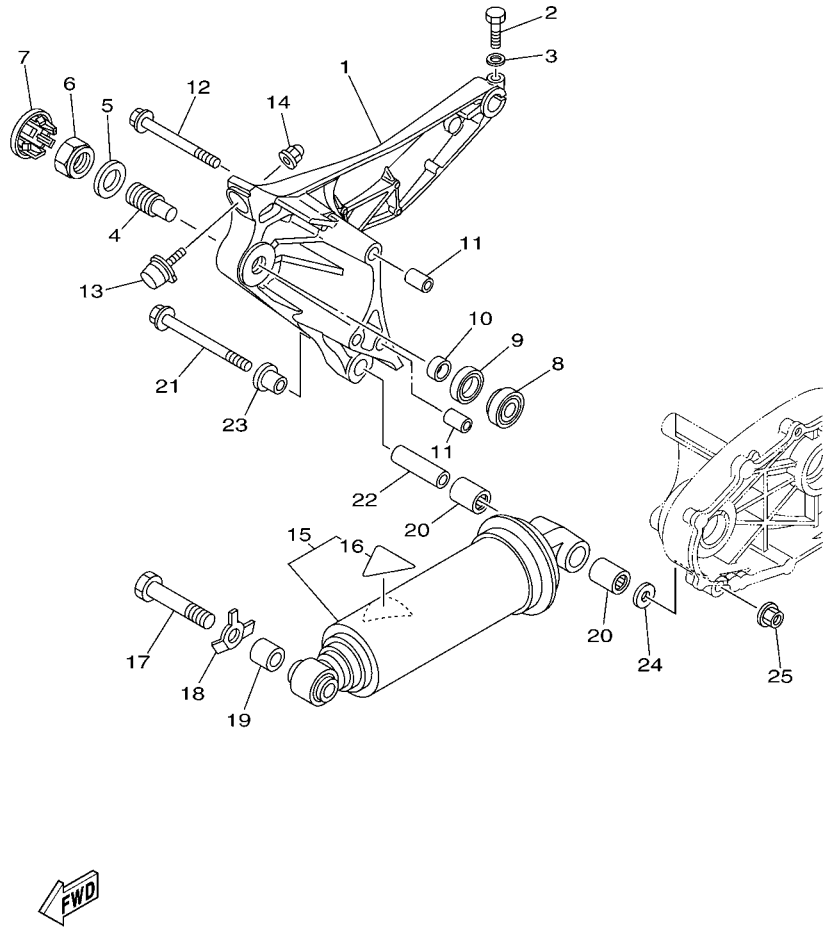

FIG. 23 BRAZO TRASERO & SUSPENSION

REF. Nº	CODIGO Nº	DESCRIPCION	4B5V					OBSERVACIONES
1	4B5–22171–11–33	BRAZO POSTERIOR 1	1					YB
2	97002–08035	PERNO	1					
3	92902–08600	ARANDELA	1					
4	15B–22141–00	EJE DEL BARCULANTE	1					
5	90201–22018	ARANDELA PLANA	1					
6	1J7–22143–00	TUERCA	1					
7	4KM–2219X–00	CUBIERTA	1					
8	93332–00010	COJINETE	1					
9	93102–25017	SELLO ACEITE	1					
10	90387–17011	ESPACIADOR	1					
11	99530–14016	PASADOR, DE ESPIGA	2					
12	95812–10100	TORNILLO DE REBORDE	3					
13	4B5–22426–00	DEFENSA DE TOPE	1					
14	90176–06016	TUERCA DE TAPA	1					
15	5VU–22210–00	AMORTIGUADOR TRASERO COMPLETO	1					
16	4AA–22259–40	.ETIQUETA DE ADVERTENCIA	1					
17	90101–16003	TORNILLO	1					
18	4B5–22243–00	ARANDELA 1	1					
19	90387–16019	ESPACIADOR	1					
20	93317–41761	COJINETE	2					
21	90105–12053	TORNILLO	1					
22	90387–12003	ESPACIADOR	1					
23	90387–12039	ESPACIADOR	1					
24	90201–12043	ARANDELA PLANA	1					
25	95602–12200	TUERCA DE AUTO-CIERRE	1					

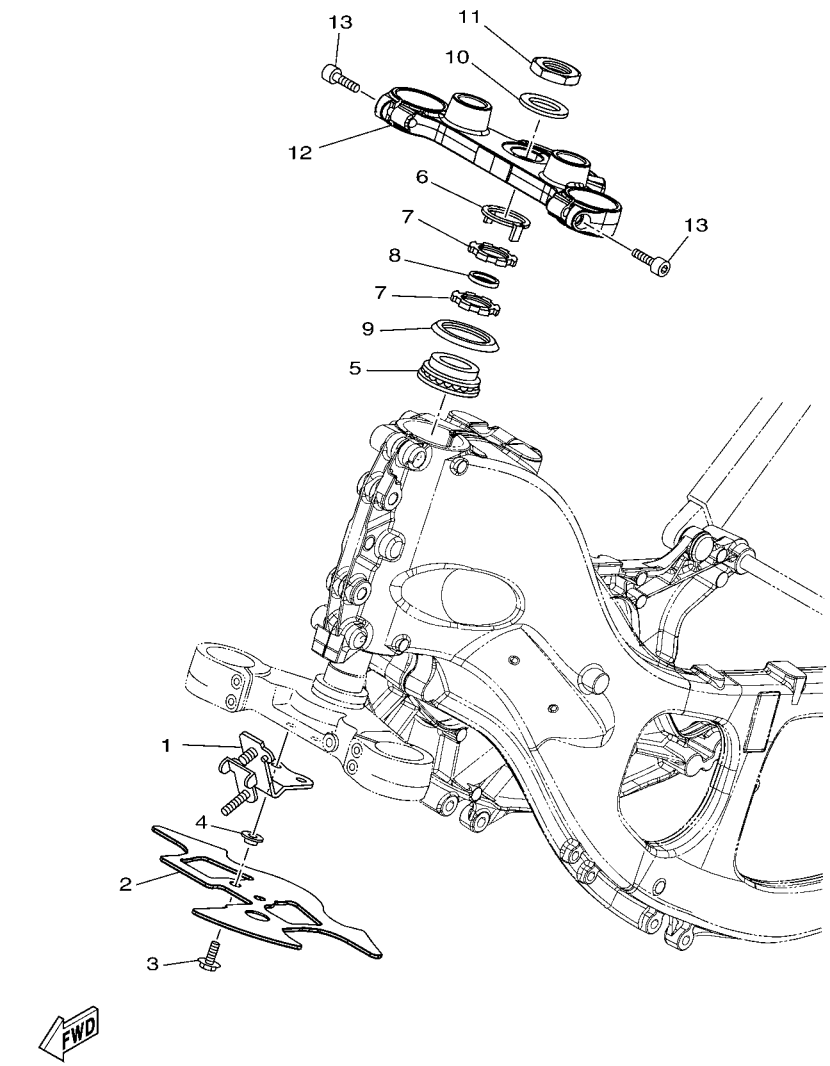

FIG. 24 DIRECCION

REF. Nº	CODIGO Nº	DESCRIPCION	4B5V					OBSERVACIONES
1	4B5–23377–00	SOPORTE DE BOCINA	1					
2	4B5–23818–00	CUBIERTA DE DIRECCION	1					
3	90119–06193	TORNILLO CON ARANDELA	2					
4	90387–062M9	ESPACIADOR	2					
5	93399–99932	COJINETE	1					
6	4XV–23418–00	ARANDELA ESPECIAL	1					
7	90179–30691	TUERCA	2					
8	90202–30235	ARANDELA DE PLANA	1					
9	4XV–23415–01	CUBIERTA DE PISTA DE BOLAS 1	1					
10	90201–28017	ARANDELA PLANA	1					
11	90170–28419	TUERCA	1					
12	4B5–Y2343–01	FIJADOR DE MANIJA	1					
13	91312–08030	TORNILLO	2					

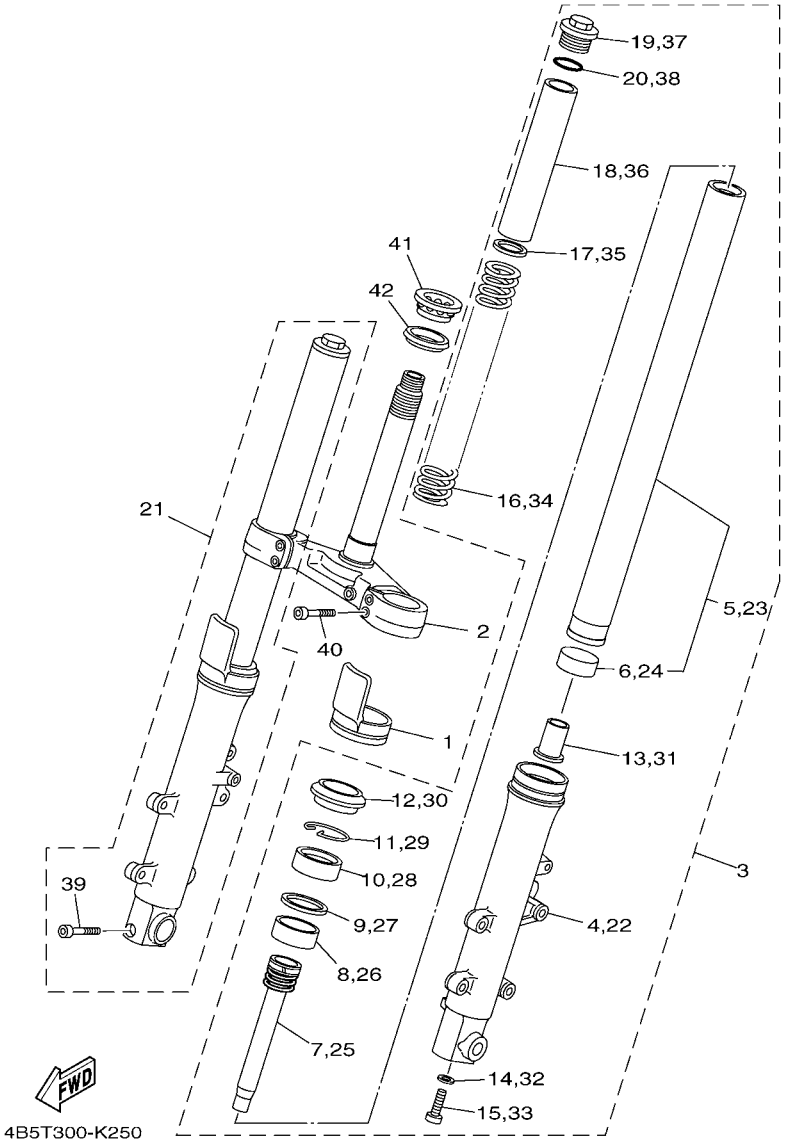

FIG. 25 HORQUILLA DELANTERA

REF. Nº	CODIGO Nº	DESCRIPCION	4B5V					OBSERVACIONES
1	4PU–2331G–00	CUBIERTA	2					
2	4B5–23340–10	PLATINA INFERIOR COMPLETA	1					
3	4B5–23102–00	HORQUILLA DELANTERA COMPL.(MI)	1					
4	4B5–23126–00	.TUBO EXTERIOR (IZQUIERDO)	1					
5	4B5–23110–00	.TUBO INTERIOR COMPLETO 1	1					
6	5EA–23171–30	..PISTON HORQUILLA DELANT.	1					
7	4B5–23170–00	.CILINDRO COMPL DE HORQ DELANT	1					
8	5EB–23125–00	.METAL CORREDIZO 1	1					
9	4V4–23146–L0	.ARANDELA DE SELLO DE ACEITE	1					
10	4PU–23145–01	.RETEN DE ACEITE	1					
11	4V4–23153–L0	.ANILLO DE ENGANCHE	1					
12	4PU–23144–00	.GUARDAPOLVO	1					
13	4YR–23173–00	.VASTAGO AHUSADO	1					
14	509–23158–L0	.EMPAQUE	1					
15	278–23181–50	.TORNILLO CABEZAHEXAGONAL	1					
16	4B5–23141–00	.RESORTE HORQUILLA DELANT.	1					
17	3LR–23149–00	.ARANDELA DE RESORTE SUPERIOR	1					
18	5WM–23118–00	.SEPARADOR	1					
19	3TJ–23111–00	.PERNO DE TAPA	1					
20	4V4–23188–L0	.ANILLO O	1					
21	4B5–23103–00	HORQUILLA DELANTERA COMPL.(MD)	1					
22	4B5–23136–00	.TUBO EXTERIOR (DERECHO)	1					
23	4B5–23110–00	.TUBO INTERIOR COMPLETO 1	1					
24	5EA–23171–30	..PISTON HORQUILLA DELANT.	1					
25	4B5–23170–00	.CILINDRO COMPL DE HORQ DELANT	1					
26	5EB–23125–00	.METAL CORREDIZO 1	1					
27	4V4–23146–L0	.ARANDELA DE SELLO DE ACEITE	1					

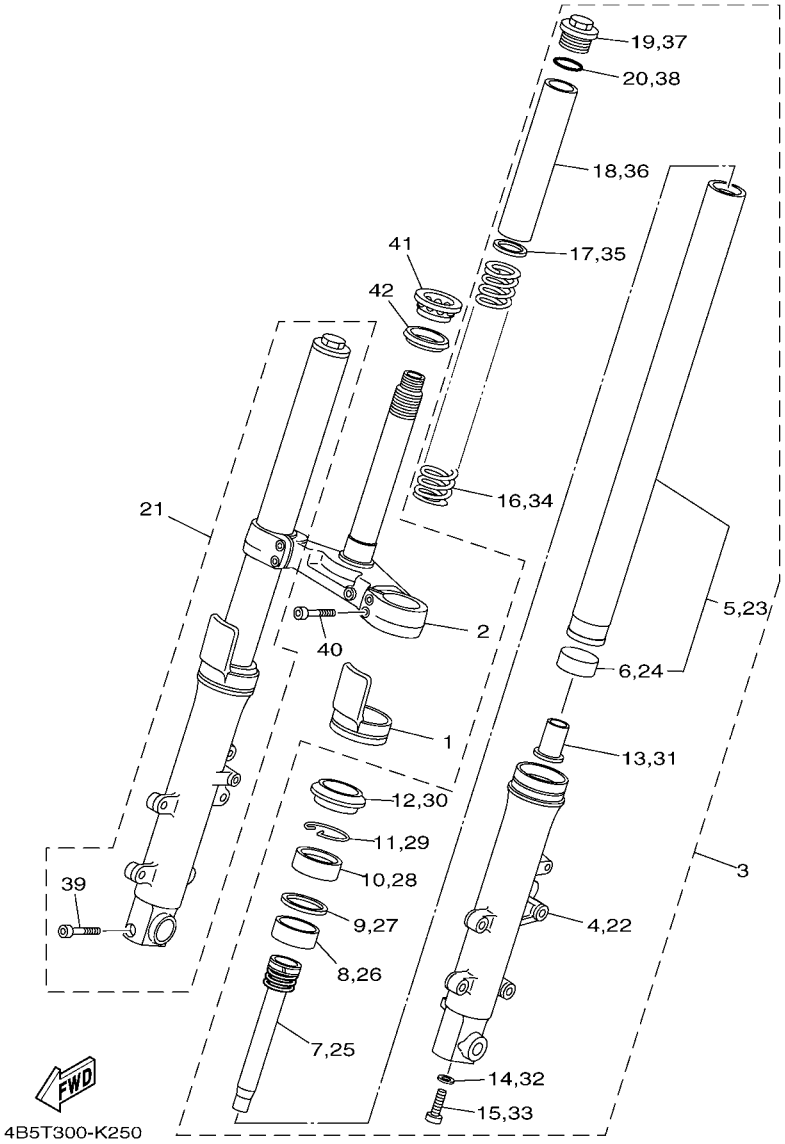

FIG. 25 HORQUILLA DELANTERA

REF. Nº	CODIGO Nº	DESCRIPCION	4B5V					OBSERVACIONES
28	4PU–23145–01	.RETEN DE ACEITE	1					
29	4V4–23153–L0	.ANILLO DE ENGANCHE	1					
30	4PU–23144–00	.GUARDAPOLVO	1					
31	4YR–23173–00	.VASTAGO AHUSADO	1					
32	509–23158–L0	.EMPAQUE	1					
33	278–23181–50	.TORNILLO CABEZAHEXAGONAL	1					
34	4B5–23141–00	.RESORTE HORQUILLA DELANT.	1					
35	3LR–23149–00	.ARANDELA DE RESORTE SUPERIOR	1					
36	5WM–23118–00	.SEPARADOR	1					
37	3TJ–23111–00	.PERNO DE TAPA	1					
38	4V4–23188–L0	.ANILLO O	1					
39	91314–08040	.TORNILLO ALLEN	1					
40	91314–08025	TORNILLO ALLEN	4					
41	93399–99957	COJINETE	1					
42	3FV–23462–00	SELLO PARA POLVO	1					

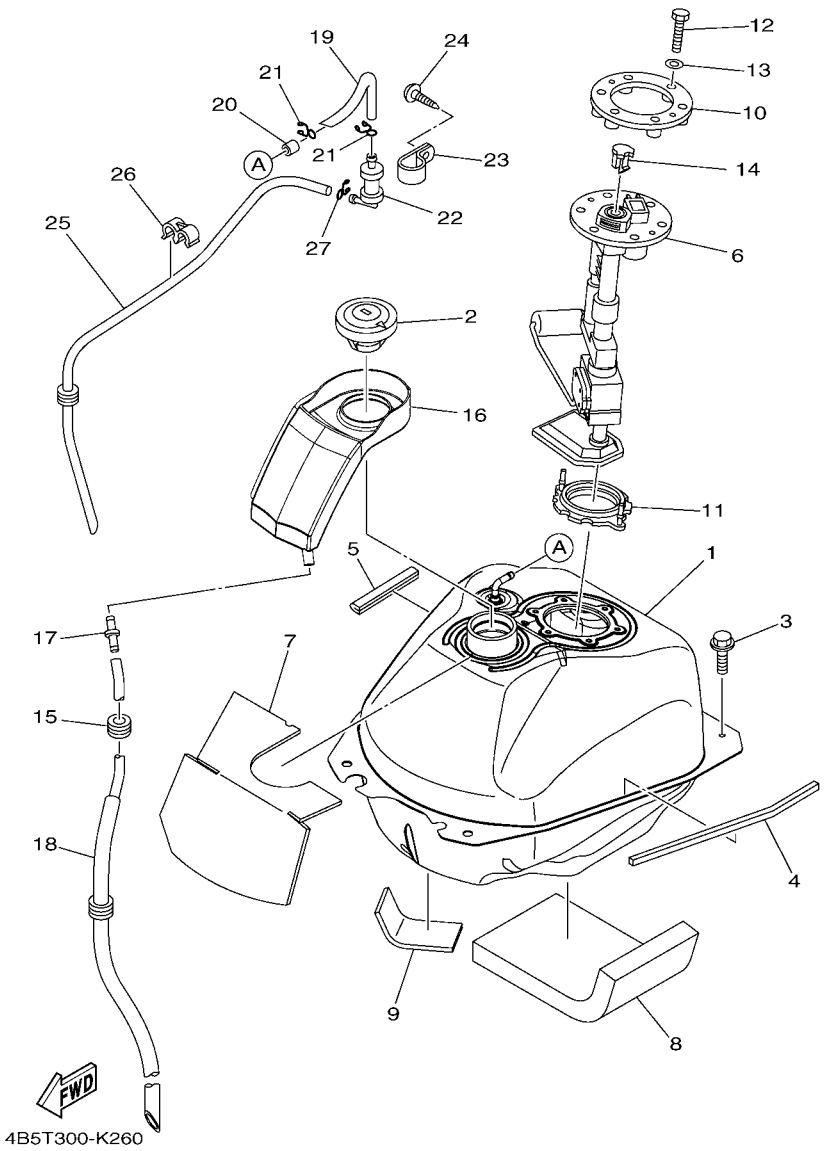

FIG. 26 DEPOSITO DE COMBUSTIBLE

REF. Nº	CODIGO Nº	DESCRIPCION	4B5V					OBSERVACIONES
1	4B5–24110–00	DEPOSITO DE COMBUSTIBLE COMP.	1					
2	54K–24602–00	TAPON COMPLETO	1					
3	90119–06200	TORNILLO CON ARANDELA	4					
4	4B5–24181–00	AMORTIGUADOR DE MONTAJE 1	1					
5	4BP–24188–00	MOLDURA DEPOSITO COMBUST.	1					
6	4B5–13907–00	BOMBA DE COMBUSTIBLE COMPLETA	1					
7	4B5–24182–00	AMORTIGUADOR DE MONTAJE 2	1					
8	4B5–24184–00	AMORTIGUADOR DE MONTAJE 4	1					
9	4B5–24185–10	AMORTIGUADOR DE MONTAJE 5	1					
10	4B5–24491–00	SOPORTE BOMBA COMBUSTIBLE	1					
11	5CA–2414G–01	SELLO	1					
12	97002–05020	PERNO	6					
13	92902–05600	ARANDELA	6					
14	5VU–24135–00	GRAMPA 1	1					
15	90480–13018	TAPON	1					
16	4B5–2414A–00	CUBIERTA DE LLENADOR	1					
17	4JP–21753–00	COPA DE CONECTOR	1					
18	4B5–24318–00	TUBO DE REBOSAMIENTO	1					
19	4B5–24313–00	TUBO 3	1					
20	4B5–24141–00	PROTECTOR DEPOSITO COMBUST.	1					
21	90467–090A2	PRESILLA	2					
22	5RB–24180–00	FRANJA DE DEPOSITO DE COMBUST.	1					
23	4B5–24135–00	GRAMPA 1	1					
24	97702–50014	TORNILLO ROSCA HEMBRA	1					
25	4B5–24314–00	TUBO 4	1					
26	90464–10M38	BRIDA	1					
27	90467–090A2	PRESILLA	1					

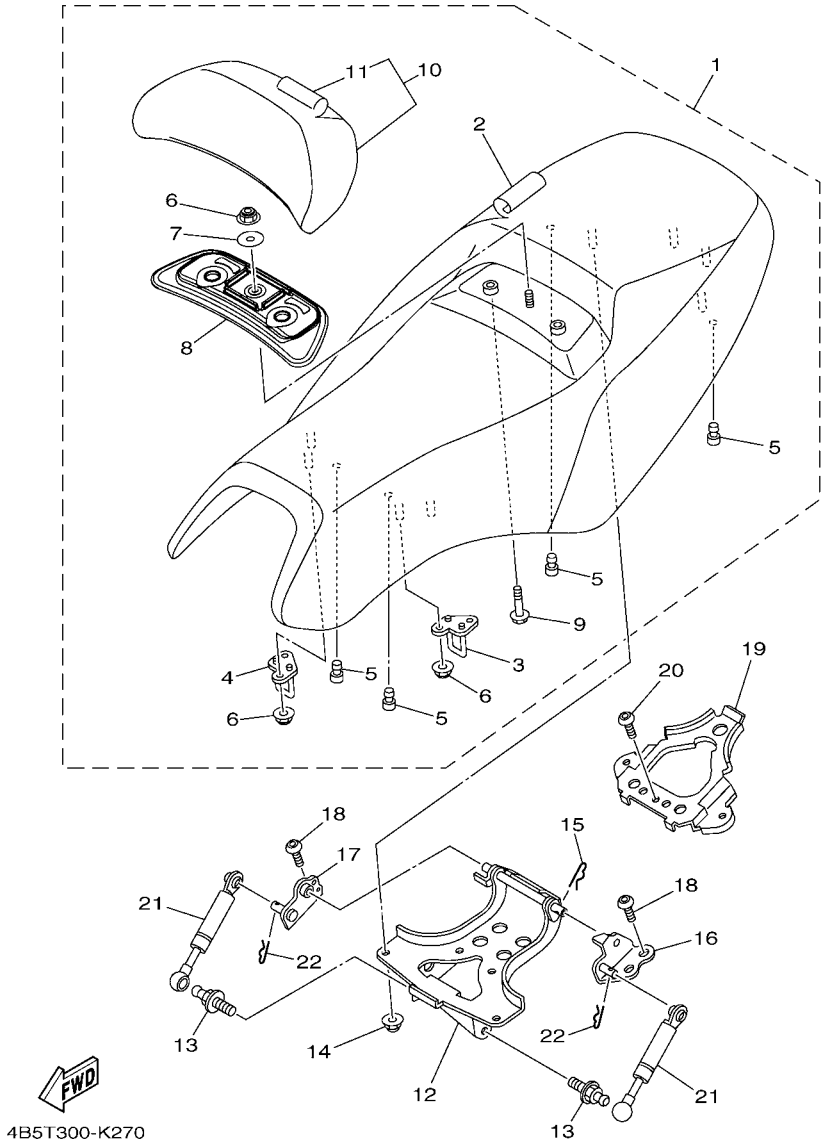

FIG. 27 ASIENTO

REF. Nº	CODIGO Nº	DESCRIPCION	4B5V					OBSERVACIONES
1	4B5–24730–51	SILLIN DOBLE COMPLETO	1					
2	4B5–24731–00	.FUNDA DE SILLIN	1					
3	4B5–24718–20	.SOPORTE DE ASIENTO	1					
4	4B5–24728–20	.SOPORTE DE ASIENTO	1					
5	5SL–24723–00	.AMORTIGUADOR DE ASIENTO	4					
6	95607–06200	.TUERCA DE AUTO-CIERRE	5					
7	90201–065G8	.ARANDELA PLANA	1					
8	4B5–24752–00	.PLACA	1					
9	95802–06025	.TORNILLO DE REBORDE	2					
10	4B5–24790–01	.ASIENTO POSTERIOR COMPLETO	1					
11	4B5–24791–00	..CUBIERTA DE ASIENTO POSTERIOR	1					
12	4B5–24726–00	HINGE SEAT	1					
13	4B5–2474E–00	BRAZO	2					
14	90176–06016	TUERCA DE TAPA	4					
15	90468–18121	PRESILLA	1					
16	4B5–24769–00	BISAGRA DE ASIENTO	1					
17	4B5–24779–00	BISAGRA DE ASIENTO 2	1					
18	92012–08020	PERNO	4					
19	4B5–2475U–00	SOPORTE	1					
20	92012–08020	PERNO	1					
21	4B5–2478G–02	TOPE	2					
22	90468–16001	PRESILLA	2					

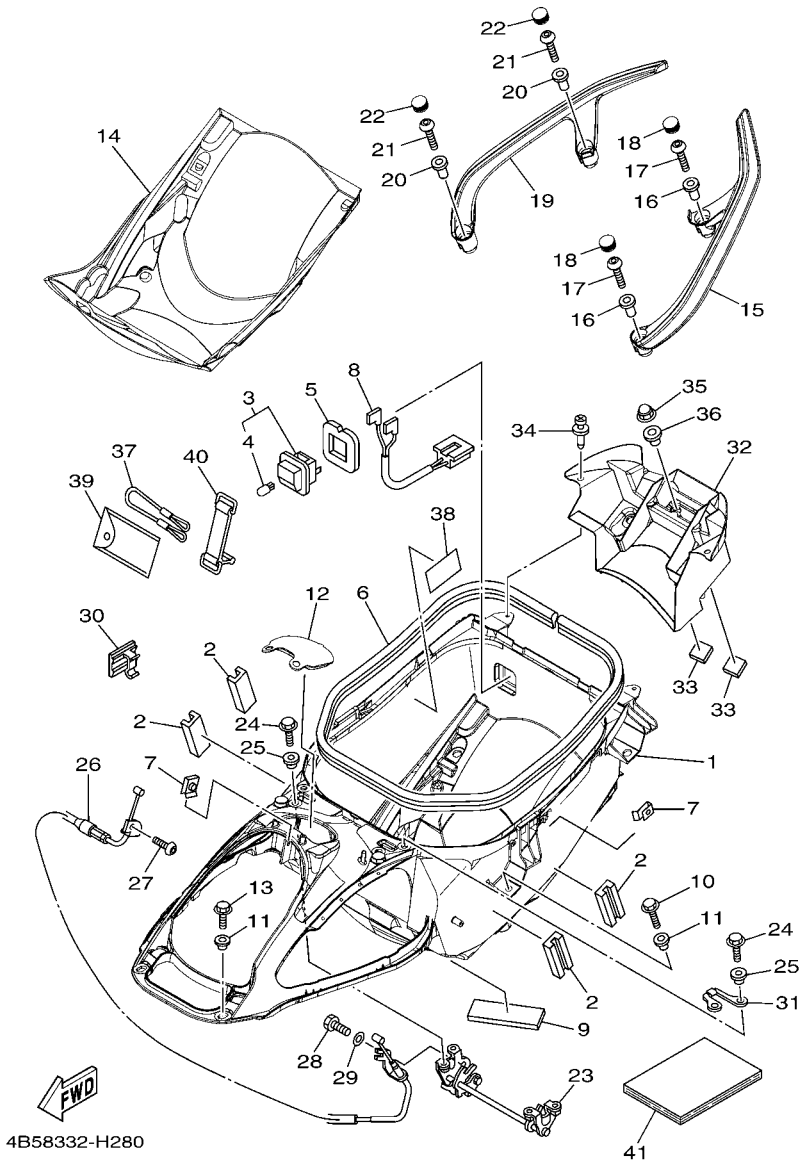

FIG. 28 ASIENTO 2

REF. Nº	CODIGO Nº	DESCRIPCION	4B5V					OBSERVACIONES
1	4B5–2473R–01	CAJA 1	1					
2	4B5–24737–00	AMORTIGUADOR DE ASIENTO	4					
3	4HC–84770–00	LUZ DE ACCESORIO	1					
4	4HC–84347–00	.BOMBILLA (12V-2W)	1					
5	5GJ–2839M–00	SELLO, CAJA 2	1					
6	4B5–2173M–00	SELLO 3	1					
7	90183–05042	TUERCA DE RESORTE	3					
8	4B5–82583–00	CABLE CONDUCTOR	1					
9	1D6–22358–00	SELLO 1	1					
10	95822–06020	TORNILLO DE REBORDE	8					
11	90387–06170	ESPACIADOR	10					
12	4B5–2482H–00	TAPA	1					
13	95022–06014	PERNO, DE BRIDA	2					
14	4B5–24747–00	AMORTIGUADOR DE ASIENTO	1					
15	4B5–2474A–01–P3	FIADOR DE EMPUNADURA	1					UR PARA SMX
	4B5–2474A–01–P8	FIADOR DE EMPUNADURA	1					UR PARA BWC1
	4B5–2474A–01–P9	FIADOR DE EMPUNADURA	1					UR PARA NMJ
16	90387–08068	ESPACIADOR	2					
17	92012–08035	PERNO	2					
18	4B5–2476U–00	PROTECTOR	2					
19	4B5–2474W–01–P3	FIADOR DE EMPUNADURA 2	1					UR PARA SMX
	4B5–2474W–01–P8	FIADOR DE EMPUNADURA 2	1					UR PARA BWC1
	4B5–2474W–01–P5	FIADOR DE EMPUNADURA 2	1					UR PARA NMJ
20	90387–08068	ESPACIADOR	2					
21	92012–08035	PERNO	2					
22	4B5–2476U–00	PROTECTOR	2					
23	4B5–24780–20	CERRADURA SILLIN COMPLETO	1					

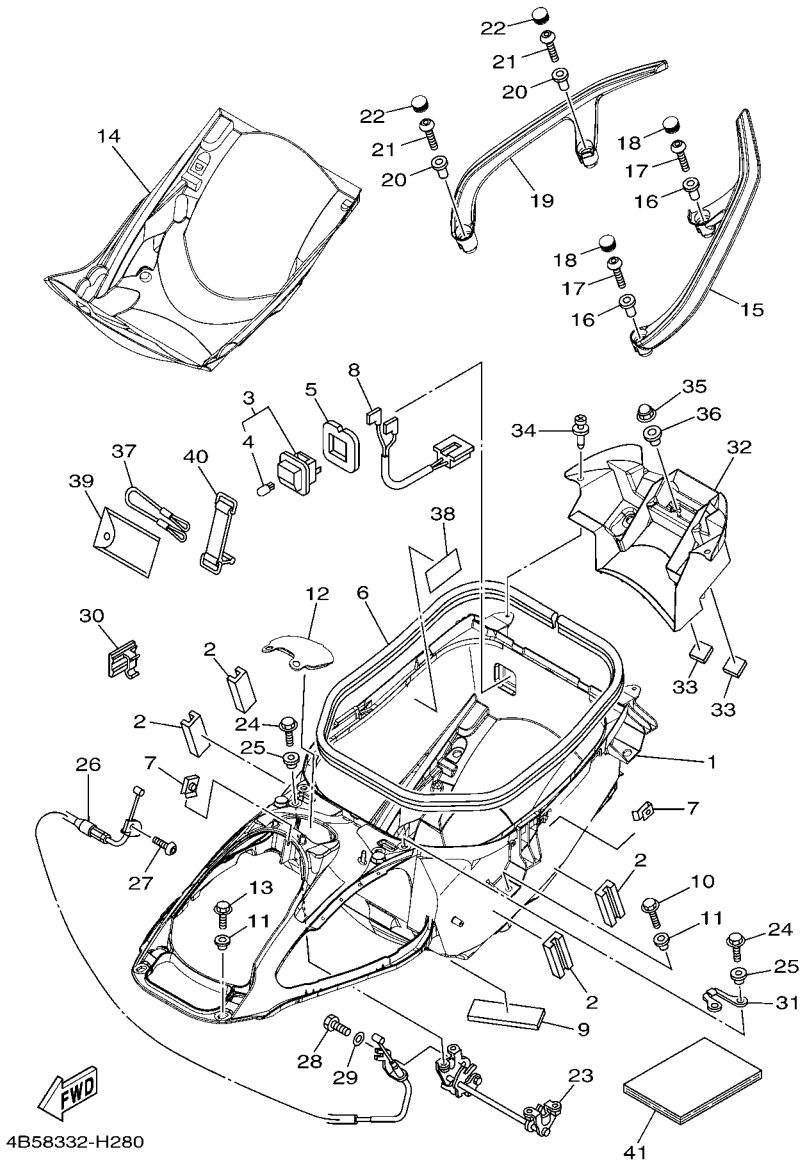

FIG. 28 ASIENTO 2

REF. Nº	CODIGO Nº	DESCRIPCION	4B5V					OBSERVACIONES
24	95822–06016	TORNILLO DE REBORDE	4					
25	90387–06170	ESPACIADOR	4					
26	4B5–2478D–00	ASIENTO DE CIERRE COMPLETO	1					
27	92012–05010	PERNO	1					
28	97002–05010	PERNO	1					
29	92902–05600	ARANDELA	1					
30	90464–07002	BRIDA	1					
31	4B5–2475K–00	SOPORTE 3	1					
32	4B5–2163A–00	CUBIERTA TRAS GUARDABARRO 1	1					
33	2TV–21639–00	AMORTIGUADOR 2	2					
34	90269–06081	REMACHE	2					
35	90176–06017	TUERCA CORONA	4					
36	90560–08066	SEPARADOR	4					
37	4B5–21398–10	COLGADOR DE CASCO	1					
38	5VU–21668–00	ETIQUETA DE FRANJA	1					
39	4B5–28100–10	JUEGO DE HERRAMIENTAS	1					
40	3TJ–82131–00	TIRANTE DE BATERIA	1					
41	4B5–28199–S4	MANUAL DEL PROPRIETARIO	1					

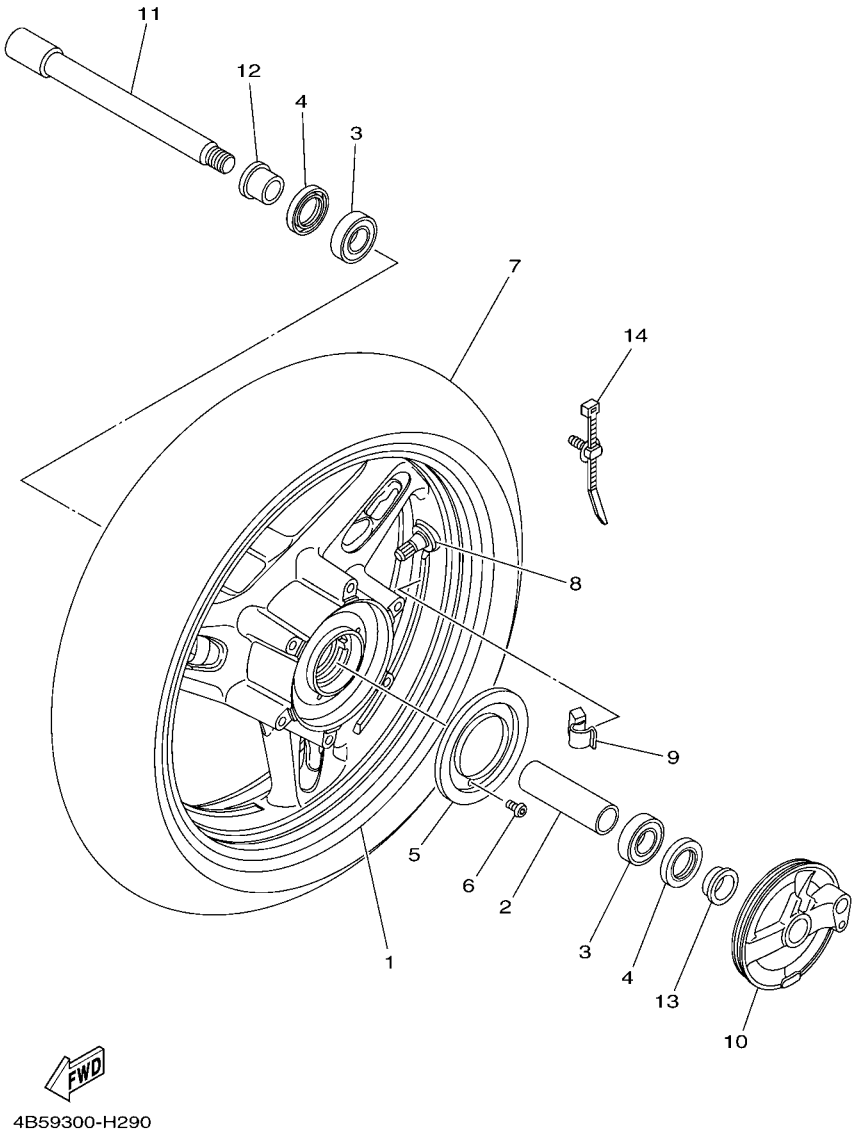

FIG. 29 RUEDA DELANTERA

REF. Nº	CODIGO Nº	DESCRIPCION	4B5V					OBSERVACIONES
1	4B5–25168–31	RUEDA FUNDIDA DELANTERA	1					
2	5EA–25117–00	ESPACIADOR DE COJINETE	1					
3	93306–07208	COJINETE	2					
4	93106–28043	SELLO ACEITE	2					
5	4B5–2517G–00	ROTOR DE SENSOR	1					
6	90149–05029	TORNILLO DE REGLAJE	3					
7	94112–15008	NEUMATICO(120/70R15M/C 56H)	1					UR BRIDGESTONE
	94112–15009	NEUMATICO(120/70R15M/C 56H)	1					UR DUNLOP
8	93900–00030	VALVULA DE ARO (TR412)	1					TAIHEIYO
9	5MT–25398–00	BALANCEADOR DE RUEDA (10G)	1					UN
	5MT–25398–10	BALANCEADOR DE RUEDA (20G)	1					UN
	5MT–25398–20	BALANCEADOR DE RUEDA (30G)	1					UN
10	4B5–2517A–00	CAJA DE SENSOR	1					
11	4XV–25181–10	EJE DE LA RUEDA	1					
12	90387–22016	ESPACIADOR	1					
13	4B5–25183–00	COLLAR DE RUEDA	1					
14	5RU–12491–00	GRAMPA 1	1					

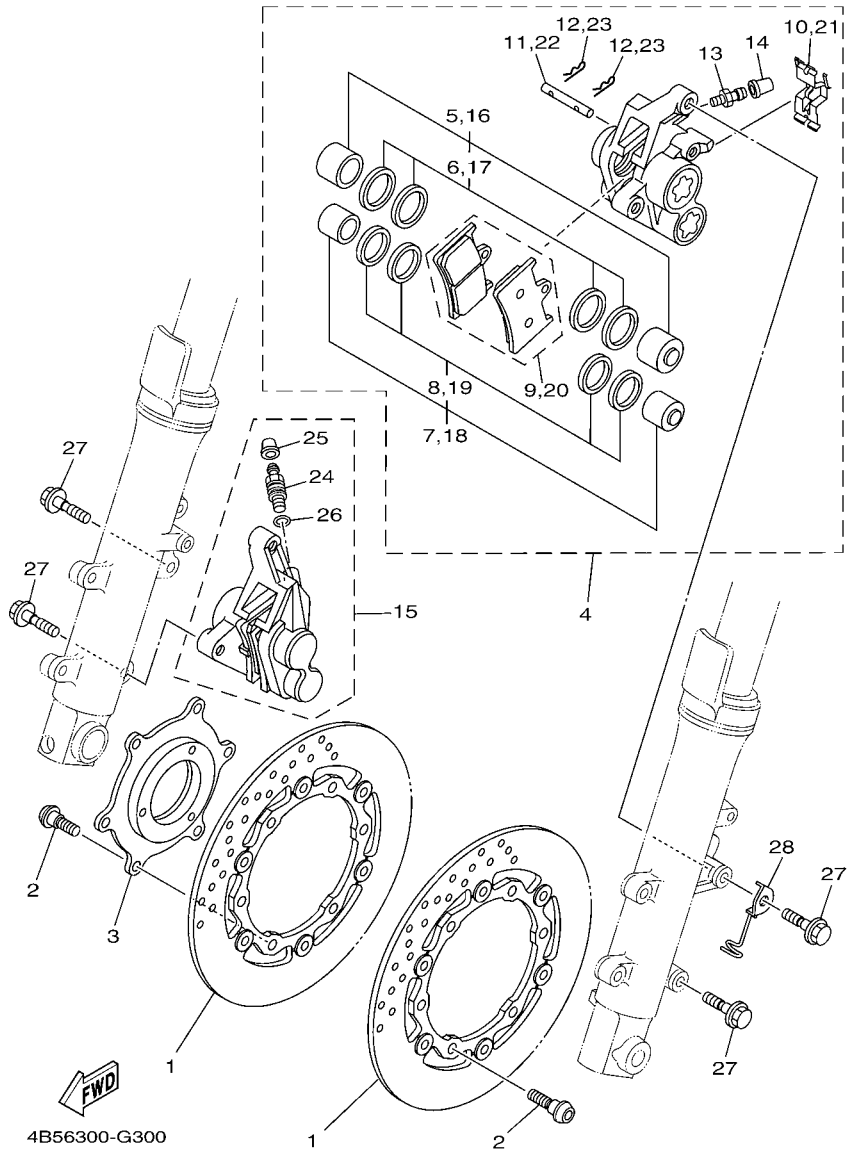

FIG. 30 CALIBRE FRENO DELANTERA

REF. Nº	CODIGO Nº	DESCRIPCION	4B5V					OBSERVACIONES
1	4B5–2581T–00	DISCO DE FRENO	2					
2	90109–064G6	PERNO	12					
3	4B5–2514A–00	AROS, MASA 1	1					
4	4B5–2580T–00	CALIBRE COMPLETO (IZQUIERDO)	1					
5	4SV–W0057–10	.PISTON COMPLETO PINZA	1					
6	3GM–W0047–10	..JUEGO DE RETENES DE PINZA	1					
7	4SV–W0057–00	.PISTON COMPLETO PINZA	1					
8	3MA–W0047–10	..JUEGO DE RETENES DE PINZA	1					
9	4B5–W0045–00	.JUEGO DE COJIN DE FRENO	1					
10	13S–25919–00	.SOPORTE DE PASTILLAS	1					
11	4SV–25924–00	.PASADOR	1					
12	3GM–25925–00	.PRESILLA	2					
13	1J3–25824–00	.TORNILLO DE RESPIRADERO	1					
14	306–25825–01	.TAPA	1					
15	4B5–2580U–10	CALIBRE COMPLETO (DERECHO)	1					
16	4SV–W0057–10	.PISTON COMPLETO PINZA	1					
17	3GM–W0047–10	..JUEGO DE RETENES DE PINZA	1					
18	4SV–W0057–00	.PISTON COMPLETO PINZA	1					
19	3MA–W0047–10	..JUEGO DE RETENES DE PINZA	1					
20	4B5–W0045–00	.JUEGO DE COJIN DE FRENO	1					
21	13S–25919–00	.SOPORTE DE PASTILLAS	1					
22	4SV–25924–00	.PASADOR	1					
23	3GM–25925–00	.PRESILLA	2					
24	5VS–25824–00	.TORNILLO DE RESPIRADERO	1					
25	306–25825–01	.TAPA	1					
26	5VS–25975–00	.AMORTIGUADOR BUJE	1					
27	90105–10638	TORNILLO	4					

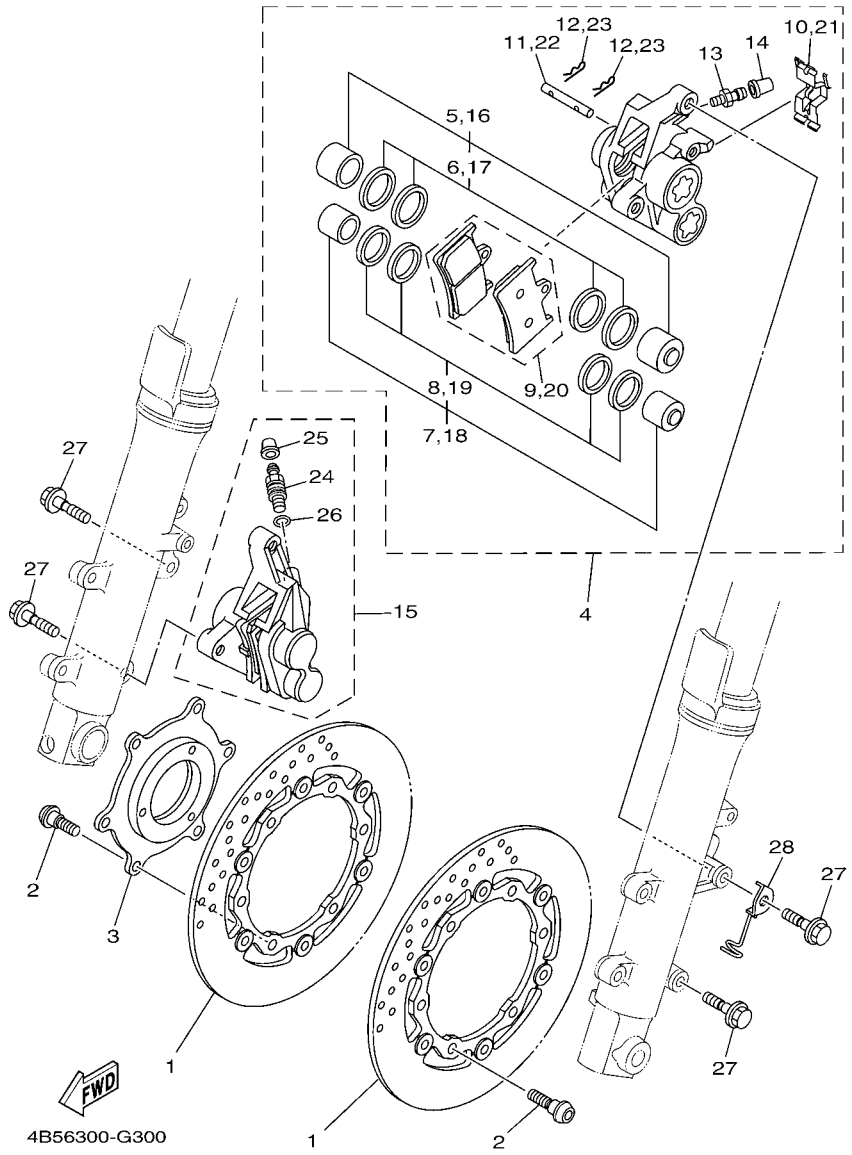

FIG. 30 CALIBRE FRENO DELANTERA

REF. Nº	CODIGO Nº	DESCRIPCION	4B5V					OBSERVACIONES
28	4B5–23317–00	SOSTEN DE CABLE	1					

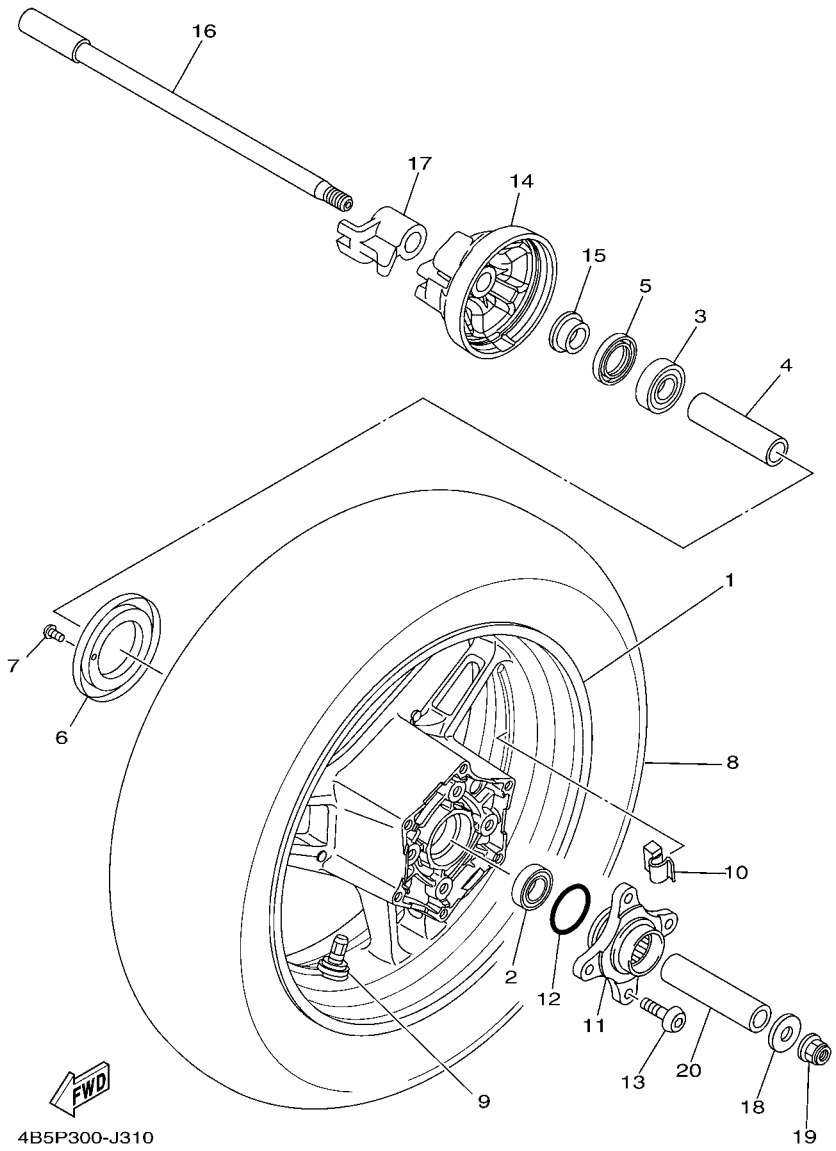

FIG. 31 RUEDA TRASERA

REF. Nº	CODIGO Nº	DESCRIPCION	4B5V					OBSERVACIONES
1	4B5–25338–31	RUEDA FUNDIDA TRASERA	1					
2	93306–20352	COJINETE	1					
3	93306–30317	COJINETE	1					
4	4B5–25317–01	ESPACIADOR DE COJINETE	1					
5	93102–25044	SELLO ACEITE	1					
6	4B5–2517G–00	ROTOR DE SENSOR	1					
7	90149–05029	TORNILLO DE REGLAJE	3					
8	94116–15011	NEUMATICO(160/60R15M/C 67H)	1					UR BRIDGESTONE
	94116–15012	NEUMATICO(160/60R15M/C 67H)	1					UR DUNLOP
9	93900–00030	VALVULA DE ARO (TR412)	1					TAIHEIYO
10	5MT–25398–00	BALANCEADOR DE RUEDA (10G)	1					UN
	5MT–25398–10	BALANCEADOR DE RUEDA (20G)	1					UN
	5MT–25398–20	BALANCEADOR DE RUEDA (30G)	1					UN
11	5GJ–25366–00	EMBRAGUE DE MASA	1					
12	93210–44704	ANILLO O	1					
13	90111–10036	TORNILLO	4					
14	4B5–2537A–00	CAJA DE SENSOR	1					
15	4B5–25377–10	COLLAR DE RUEDA	1					
16	5GJ–25381–10	EJE DE RUEDA	1					
17	5VU–25383–A0	COLLAR DE RUEDA	1					
18	90201–14022	ARANDELA PLANA	1					
19	95602–14200	TUERCA DE AUTO-CIERRE	1					
20	90560–17306	SEPARADOR	1					

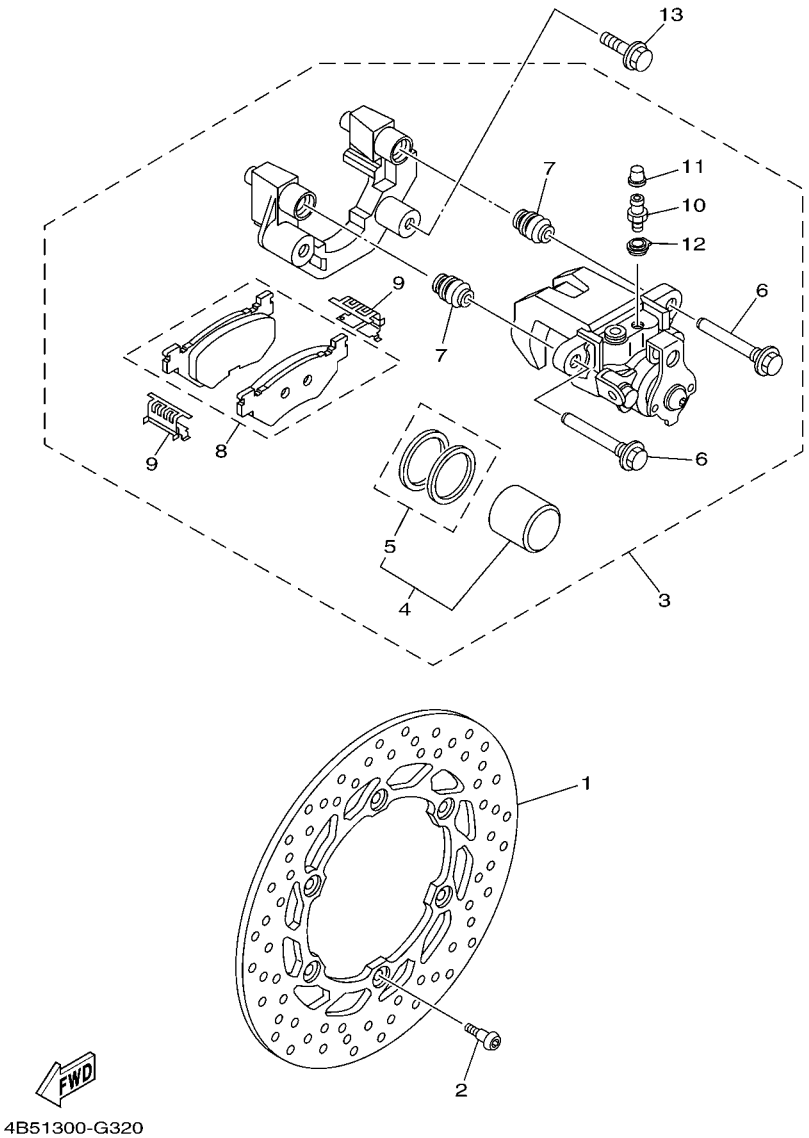

FIG. 32 CALIBRE FRENO TRASERA

REF. Nº	CODIGO Nº	DESCRIPCION	4B5V					OBSERVACIONES
1	4B5–2582V–00	DISCO DE FRENO TRASEROS 1	1					
2	90109–064G6	PERNO	6					
3	4B5–2580V–00	CALIBRE COMPLETO TRASEROS 1	1					
4	4D9–W0057–00	.PISTON COMPLETO PINZA	1					
5	5GJ–W0047–01	..JUEGO DE RETENES DE PINZA	1					
6	4D9–25914–10	.PASADOR	2					
7	4TT–25937–00	.FUNDA	2					
8	5RU–W0046–00	.JUEGO DE PASTILLAS DE FRENO 2	1					
9	4TT–25919–00	.SOPORTE DE PASTILLAS	2					
10	5GM–25824–00	.TORNILLO DE RESPIRADERO	1					
11	1D7–25825–00	.TAPA	1					
12	5GM–25975–00	.AMORTIGUADOR BUJE	1					
13	90105–10638	TORNILLO	2					

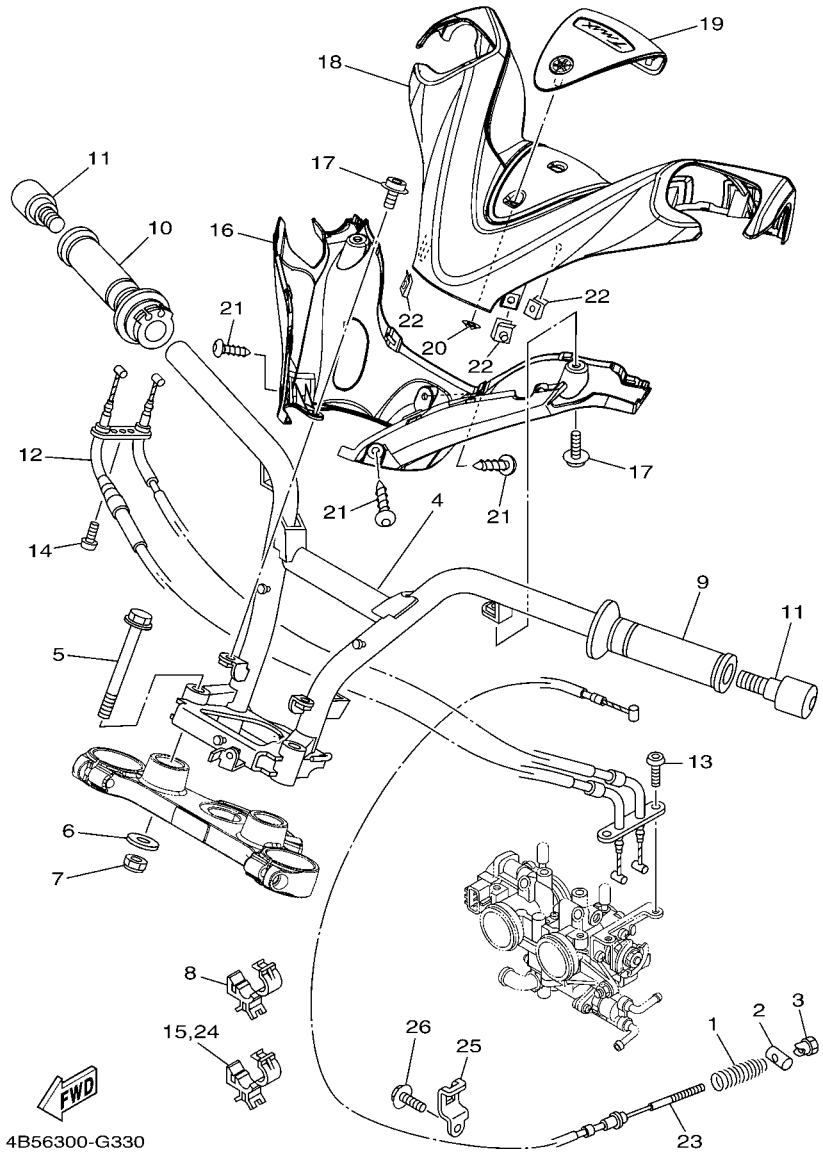

FIG. 33 MANILLAR & CABLE

REF. Nº	CODIGO Nº	DESCRIPCION	4B5V					OBSERVACIONES
1	5VU–25333–00	RESORTE DE RETORNO	1					
2	90249–12004	PASADOR	1					
3	90179–06018	TUERCA	1					
4	4B5–26110–10	MANUBRIO COMPLETE	1					
5	90105–10150	TORNILLO	2					
6	90201–10043	ARANDELA PLANA	2					
7	95602–10100	TUERCA U	2					
8	90464–20191	BRIDA	2					
9	4YR–26241–02	EMPUNADURA (IZQUIERDO)	1					
10	4YR–26240–02	EMPUNADURA COMPLETA	1					
11	3HX–26246–10	EXTREMO DE EMPUNADURA	2					
12	4B5–26301–11	CABLE DE ACELERADOR COMPLETO	1					
13	92012–05012	PERNO	2					
14	98502–05020	TORNILLO	1					
15	90464–15192	BRIDA	1					
16	4B5–26144–00	CUBIERTA DE MANUBRIO INFERIOR1	1					
17	90159–05032	TORNILLO CON VALONA	4					
18	4B5–26143–00	CUBIERTA DE MANUBRIO SUPERIOR1	1					
19	4B5–26145–00	CUBIERTA DE MANUBRIO SUPERIOR2	1					
20	90183–05068	TUERCA DE RESORTE	3					
21	90167–05079	TORNILLO DE ROSCA HEMBRA	3					
22	90183–05042	TUERCA DE RESORTE	3					
23	4B5–2835X–01	CABLE	1					
24	90464–15192	BRIDA	1					
25	4B5–26131–00	GUIA DE CABLE 1	1					
26	95802–06010	TORNILLO DE REBORDE	1					

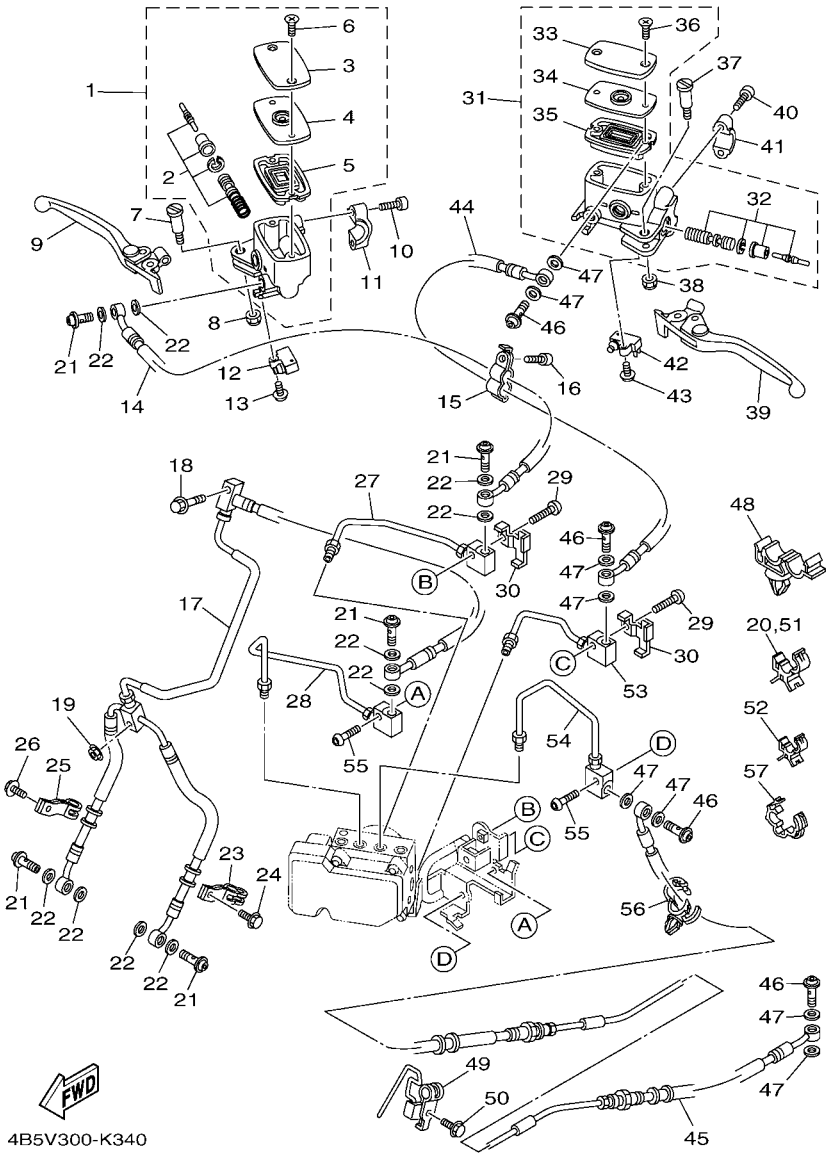

FIG. 34 CILINDRO MAESTRO DELANTERO

REF. Nº	CODIGO Nº	DESCRIPCION	4B5V					OBSERVACIONES
1	4B5–W2587–20	CILINDRO MAESTRO SUB COMPLET	1					
2	4B5–W0041–00	.JUEGO DE CILINDRO MAESTRO	1					
3	4B5–25852–00	.TAPA DE TANQUE DE RESERVA	1					
4	4B5–25855–00	.BUJE DE DIAFRAGMA	1					
5	4B5–25854–00	.EMPAQUE,DIAFRAGMA	1					
6	5VS–2589H–00	.TORNILLO	2					
7	5VS–2589F–00	PERNO DE PALANCA	1					
8	95617–06100	TUERCA U	1					
9	4B5–83922–00	PALANCA 2	1					
10	5VS–26332–00	PERNO	2					
11	5VS–25867–00	SOPORTE DE CILINDRO MAESTRO	1					
12	36Y–82917–10	INTERRUPTOR	1					
13	97602–04214	TORNILLO CON RONDONA	1					
14	4B5–25874–00	MANGUERA DE FRENO	1					
15	4B5–25875–10	SOPORTE DE MANGUERA FRENO 1	1					
16	91312–06016	TORNILLO	1					
17	4B5–25873–01	MANGUERA DE FRENO 2	1					
18	95022–06025	PERNO, DE BRIDA	1					
19	95702–06500	TUERCA DE BRIDA	1					
20	90464–15192	BRIDA	1					
21	90401–10172	PERNO DE UNION	5					
22	90430–10005	JUNTA	10					
23	4B5–25886–00	SOPORTE DE MANGUERA FRENO	1					
24	95802–06012	TORNILLO DE REBORDE	1					
25	4B5–25875–00	SOPORTE DE MANGUERA FRENO 1	1					
26	95802–06012	TORNILLO DE REBORDE	1					
27	4B5–25883–00	TUBO DE FRENO 3	1					

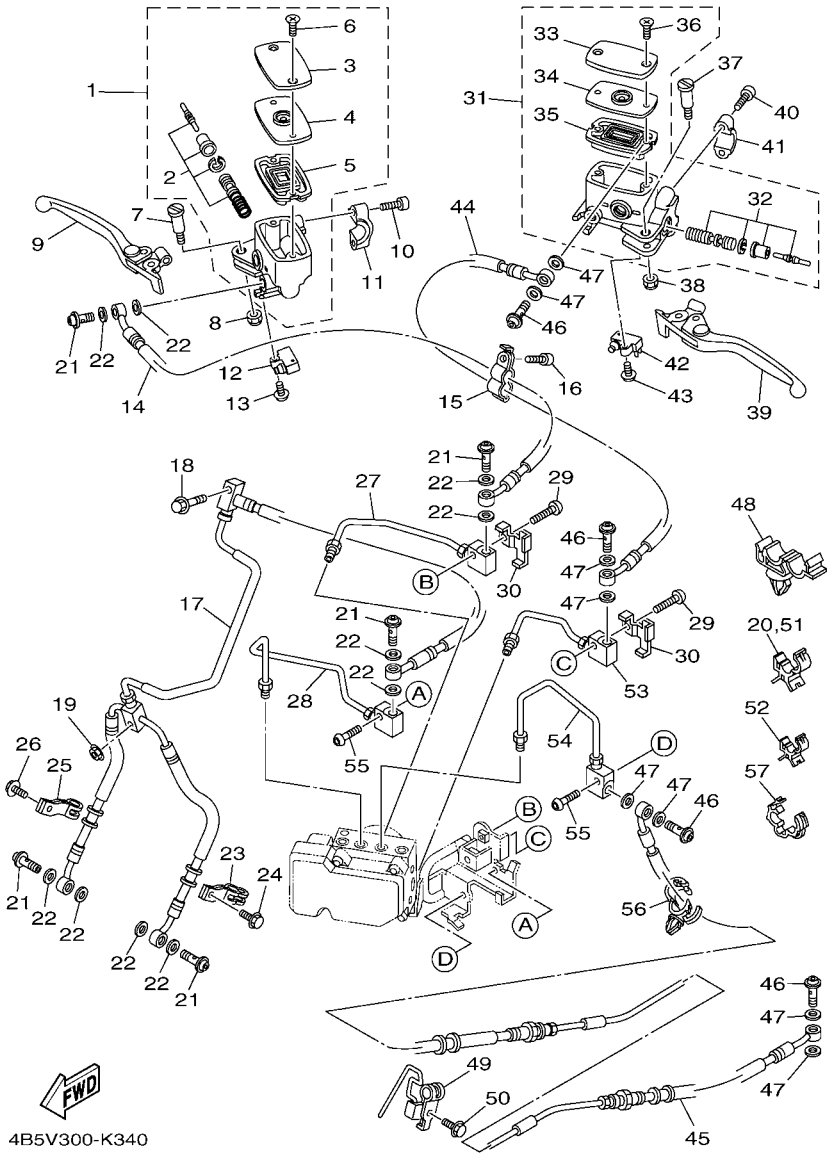

FIG. 34 CILINDRO MAESTRO DELANTERO

REF. Nº	CODIGO Nº	DESCRIPCION	4B5V					OBSERVACIONES
28	4B5–25882–00	TUBO DE FRENO 2	1					
29	92012–06025	PERNO	2					
30	4B5–2615E–00	PLACA	2					
31	4B5–W2587–30	CILINDRO MAESTRO SUB COMPLET	1					
32	4B5–W0041–10	.JUEGO DE CILINDRO MAESTRO	1					
33	4B5–25852–00	.TAPA DE TANQUE DE RESERVA	1					
34	4B5–25855–00	.BUJE DE DIAFRAGMA	1					
35	4B5–25854–00	.EMPAQUE,DIAFRAGMA	1					
36	5VS–2589H–00	.TORNILLO	2					
37	5VS–2589F–00	PERNO DE PALANCA	1					
38	95617–06100	TUERCA U	1					
39	4B5–83912–00	PALANCA 1	1					
40	5VS–26332–00	PERNO	2					
41	5VS–25867–00	SOPORTE DE CILINDRO MAESTRO	1					
42	36Y–83980–10	INTERRUP. DE PARADA DELANTERO	1					
43	97602–04214	TORNILLO CON RONDONA	1					
44	4B5–2584B–00	MANGUERA DE FRENO	1					
45	4B5–2584C–01	MANGUERA DE FRENO	1					
46	90401–10172	PERNO DE UNION	4					
47	90430–10005	JUNTA	8					
48	90464–10008	BRIDA	1					
49	4B5–25876–10	SOPORTE DE MANGUERA FRENO 2	1					
50	95802–06010	TORNILLO DE REBORDE	1					
51	90464–15192	BRIDA	1					
52	90464–08189	BRIDA	1					
53	4B5–2588B–00	TUBO DE FRENO 5	1					
54	4B5–2588C–00	TUBO DE FRENO 6	1					

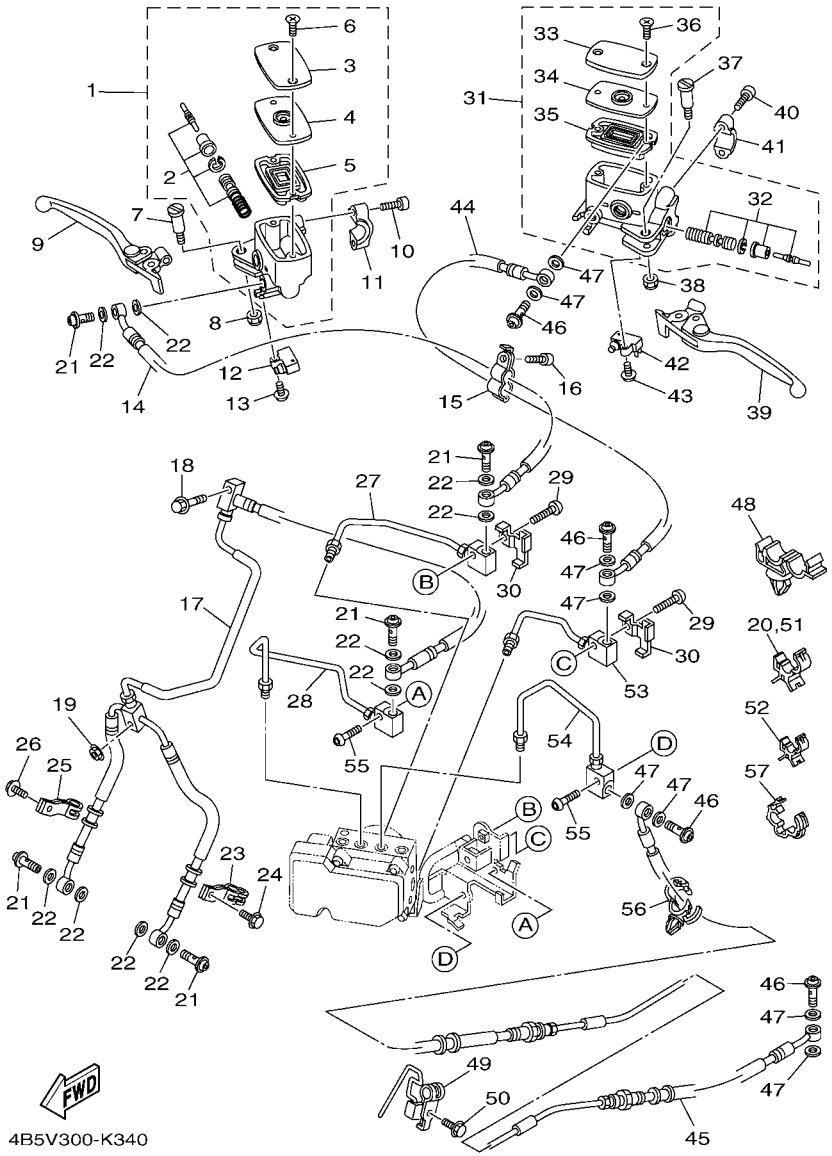

FIG. 34 CILINDRO MAESTRO DELANTERO

REF. Nº	CODIGO Nº	DESCRIPCION	4B5V					OBSERVACIONES
55	92012–06025	PERNO	2					
56	90464–20181	BRIDA	1					
57	90464–14003	BRIDA	2					

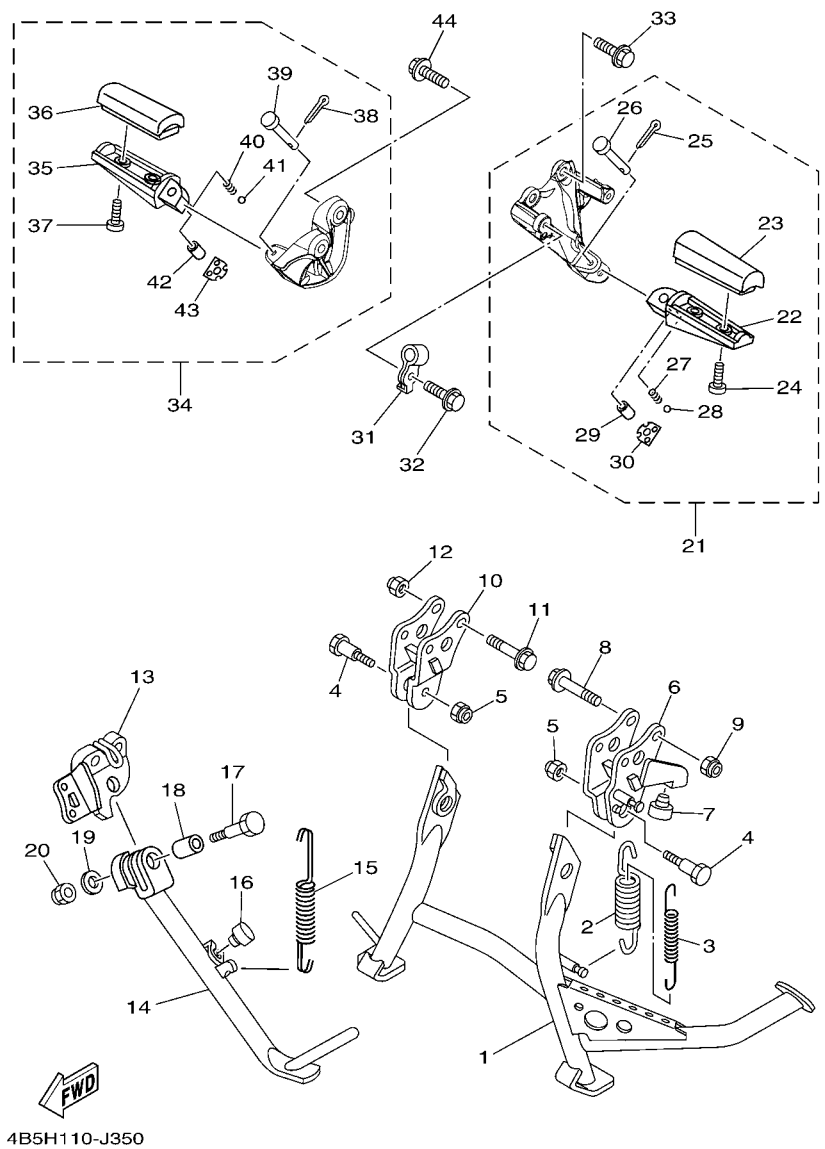

FIG. 35 SOPORTE & APOYAPIE

REF. Nº	CODIGO Nº	DESCRIPCION	4B5V					OBSERVACIONES
1	4B5–27111–00	PUNTAL PRINCIPAL	1					
2	90506–40508	RESORTE DE TENSION	1					
3	90506–23509	RESORTE DE TENSION	1					
4	90109–10029	PERNO	2					
5	90185–10022	TUERCA AUTOBLOCANTE	2					
6	4B5–27151–00	SOPORTE PUNTAL PPAL.	1					
7	4X4–27114–00	TOPE DE PUNTAL PRINCIPAL	1					
8	90105–10283	TORNILLO	2					
9	90185–10022	TUERCA AUTOBLOCANTE	2					
10	4B5–27152–00	SOPORTE PUNTAL PPAL.	1					
11	90105–10283	TORNILLO	2					
12	90185–10022	TUERCA AUTOBLOCANTE	2					
13	4B5–27321–00	SOPORTE DE PUNTAL LATERAL	1					
14	4B5–27311–10	PUNTAL LATERAL	1					
15	90506–20027	RESORTE DE TENSION	1					
16	4X4–27114–00	TOPE DE PUNTAL PRINCIPAL	1					
17	90101–10025	TORNILLO	1					
18	90387–10018	ESPACIADOR	1					
19	92902–10200	ARANDELA	1					
20	95602–10100	TUERCA U	1					
21	4B5–27430–00	APOYAPIE POSTERIOR COMPLETO 1	1					
22	4DN–27431–01	.APOYAPIE POSTERIOR 1	1					
23	4BP–27413–00	.CUBIERTA DE APOYAPIE	1					
24	90157–05025	.TORNILLO CABEZA CONICA PLANA	2					
25	91402–20012	.CHAVETA	1					
26	91702–06038	.PASADOR DE ADRAZADERA	1					
27	90501–15001	.RESORTE DE COMPRESION	1					

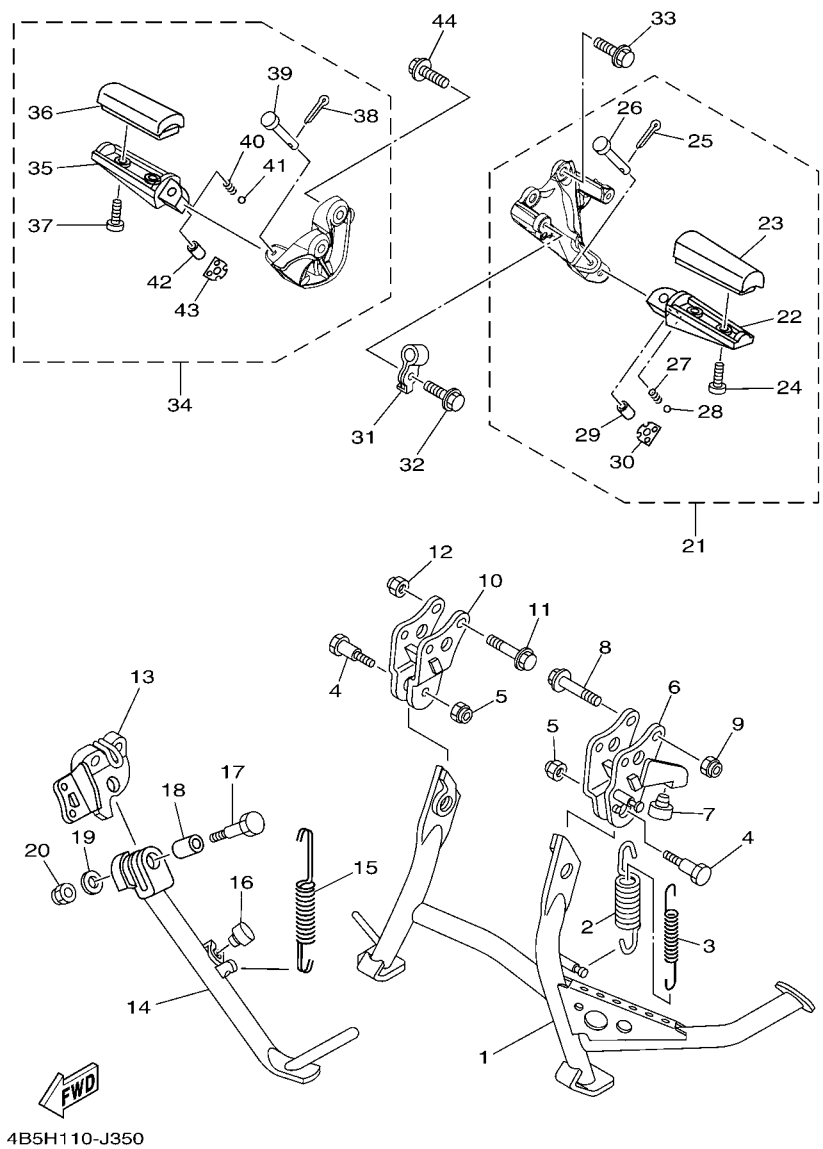

FIG. 35 SOPORTE & APOYAPIE

REF. Nº	CODIGO Nº	DESCRIPCION	4B5V					OBSERVACIONES
28	93501–04011	.BOLA	1					
29	90387–064H8	.ESPACIADOR	1					
30	4B5–27437–00	.ARANDELA ESPECIAL	1					
31	4B5–25876–00	SOPORTE DE MANGUERA FRENO 2	1					
32	95802–06014	TORNILLO DE REBORDE	1					
33	95812–08025	TORNILLO DE REBORDE	2					
34	4B5–27440–00	APOYAPIE POSTERIOR COMPLETO 2	1					
35	4DN–27441–01	.APOYAPIE POSTERIOR 2	1					
36	4BP–27413–00	.CUBIERTA DE APOYAPIE	1					
37	90157–05025	.TORNILLO CABEZA CONICA PLANA	2					
38	91402–20012	.CHAVETA	1					
39	91702–06038	.PASADOR DE ADRAZADERA	1					
40	90501–15001	.RESORTE DE COMPRESION	1					
41	93501–04011	.BOLA	1					
42	90387–064H8	.ESPACIADOR	1					
43	4B5–27437–00	.ARANDELA ESPECIAL	1					
44	95812–08025	TORNILLO DE REBORDE	2					

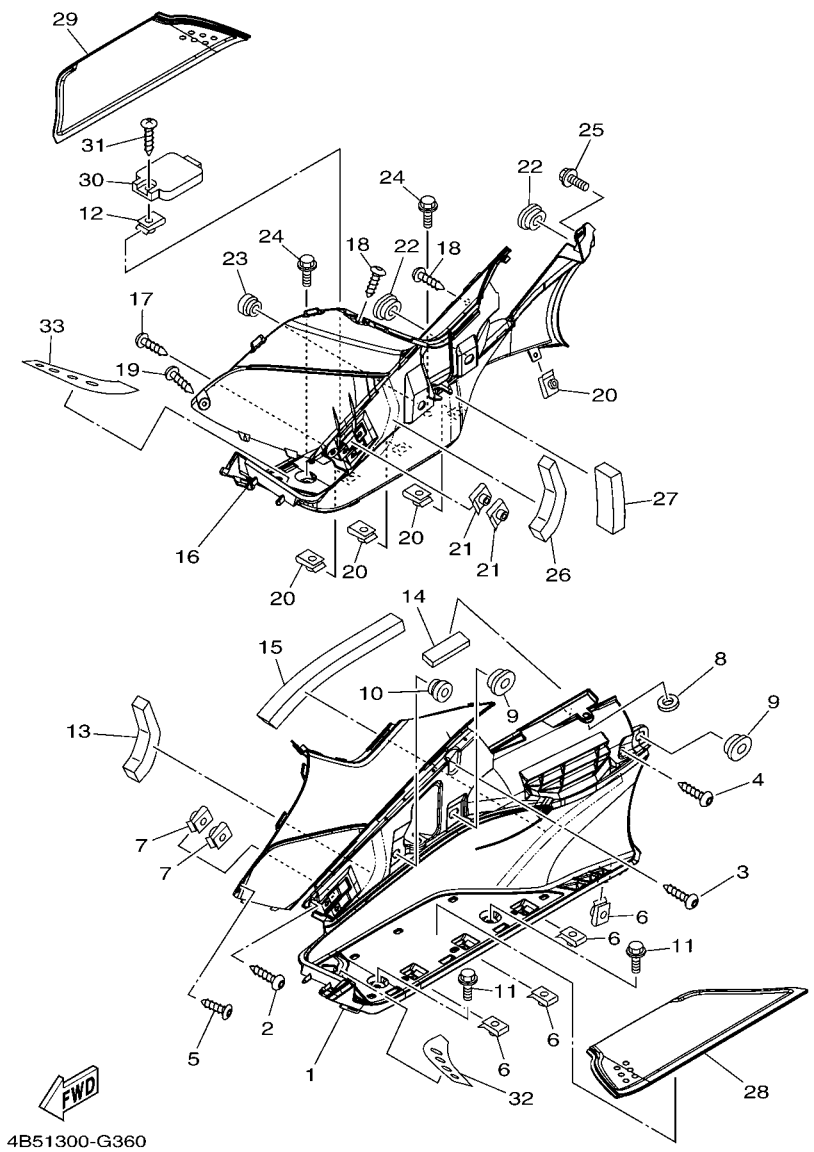

FIG. 36 SOPORTE & APOYAPIE 2

REF. Nº	CODIGO Nº	DESCRIPCION	4B5V					OBSERVACIONES
1	4B5–27481–00	TABLERO DE APOYAPIE	1					
2	97702–50016	TORNILLO ROSCA HEMBRA	1					
3	97702–50016	TORNILLO ROSCA HEMBRA	1					
4	97702–50016	TORNILLO ROSCA HEMBRA	2					
5	90167–05076	TORNILLO DE ROSCA HEMBRA	1					
6	90183–05042	TUERCA DE RESORTE	4					
7	90183–060A6	TUERCA DE RESORTE	2					
8	4B5–27485–00	SELLO	1					
9	90480–01558	TAPON	2					
10	90480–13567	TAPON	1					
11	90119–06209	TORNILLO CON ARANDELA	2					
12	90183–05042	TUERCA DE RESORTE	1					
13	4B5–28217–00	AMORTIGUADOR 1	1					
14	4B5–28247–00	AMORTIGUADOR 4	1					
15	4B5–28267–00	AMORTIGUAFDOR 5	1					
16	4B5–27488–00	TABLERO DE APOYAPIE 2	1					
17	97702–50016	TORNILLO ROSCA HEMBRA	1					
18	97702–50016	TORNILLO ROSCA HEMBRA	2					
19	90167–05076	TORNILLO DE ROSCA HEMBRA	1					
20	90183–05042	TUERCA DE RESORTE	5					
21	90183–060A6	TUERCA DE RESORTE	2					
22	90480–01558	TAPON	2					
23	90480–13567	TAPON	1					
24	90119–06209	TORNILLO CON ARANDELA	2					
25	90119–06235	TORNILLO CON ARANDELA	1					
26	4B5–28217–00	AMORTIGUADOR 1	1					
27	4B5–28227–00	AMORTIGUADRO 2	1					

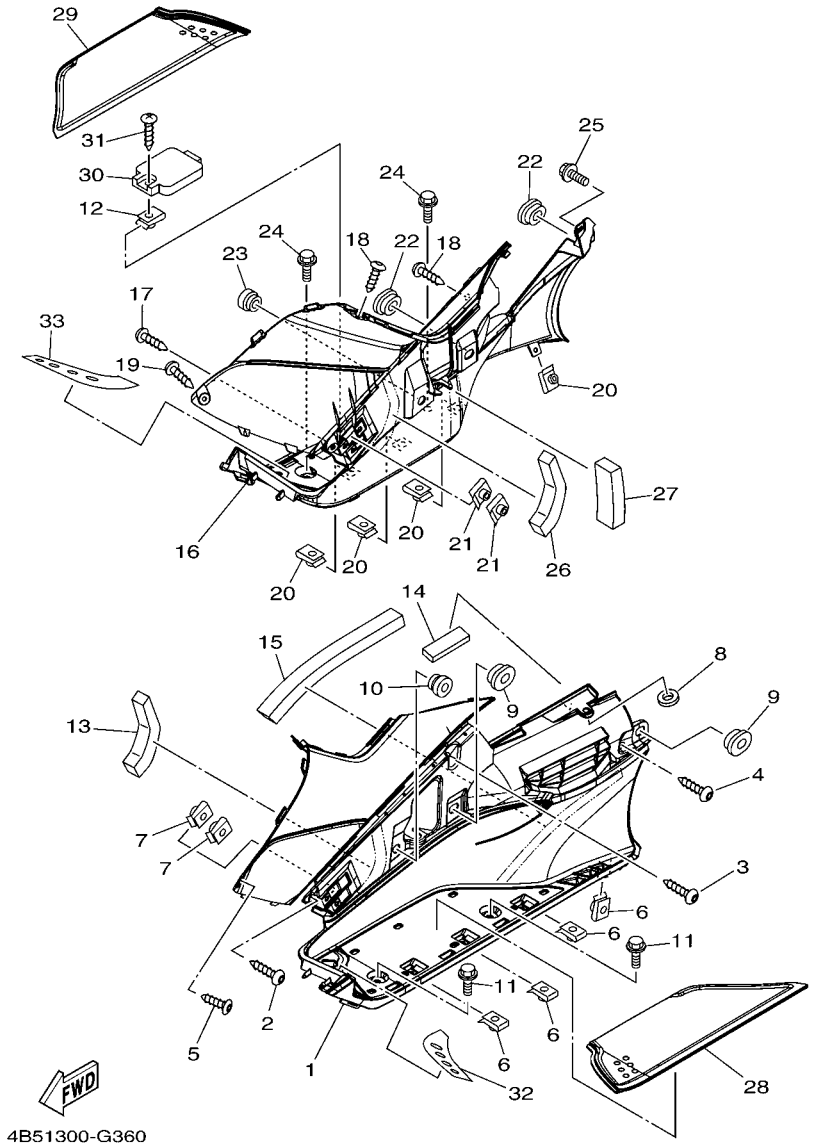

FIG. 36 SOPORTE & APOYAPIE 2

REF. Nº	CODIGO Nº	DESCRIPCION	4B5V					OBSERVACIONES
28	4B5–27483–00	TAPETE 1	1					
29	4B5–27484–00	TAPETE 2	1					
30	5GJ–27463–00	CUBIERTA APOYAPIE 2	1					
31	97702–50016	TORNILLO ROSCA HEMBRA	1					
32	4B5–27451–00	APOYAPIE	1					
33	4B5–27461–00	APOYAPIE	1					

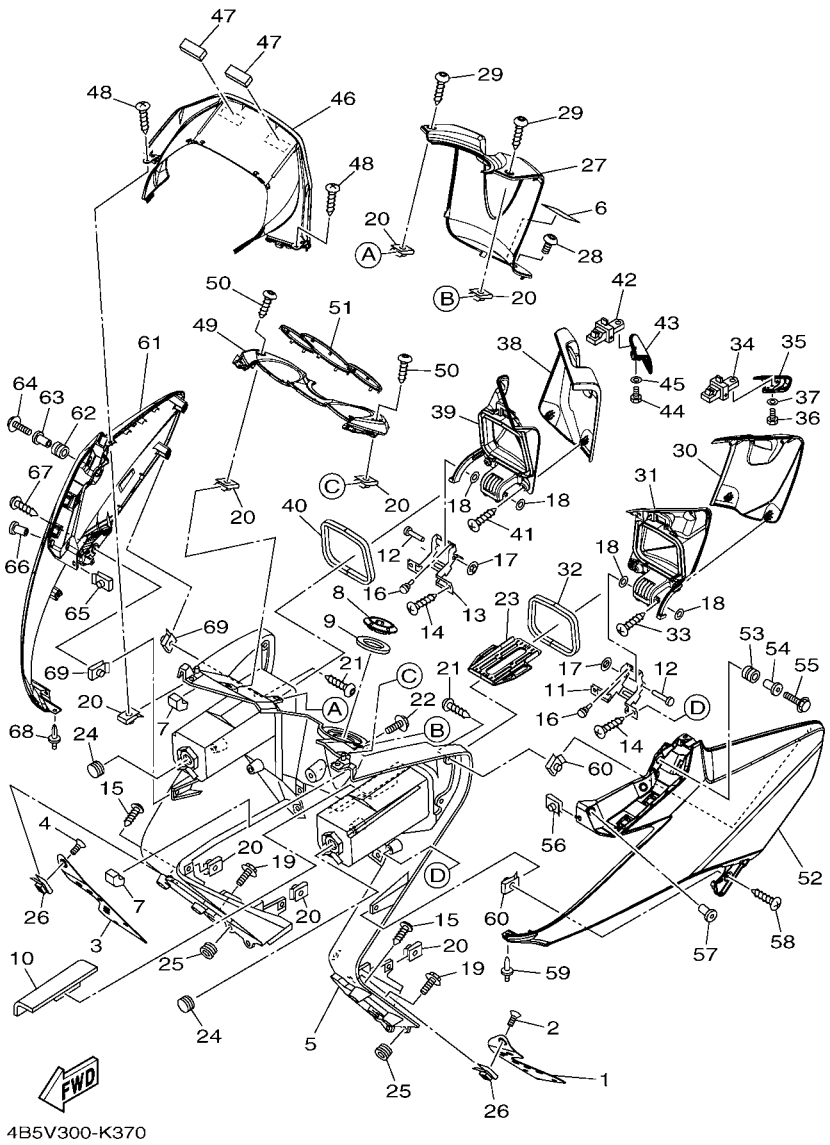

FIG. 37 PATA PROTEGIDA

REF. Nº	CODIGO Nº	DESCRIPCION	4B5V					OBSERVACIONES
1	4B5–27411–00	APOYAPIE 1	1					
2	90151–06076	TORNILLO EMBUTIDO	4					
3	4B5–27421–00	APOYAPIE 2	1					
4	90151–06076	TORNILLO EMBUTIDO	4					
5	4B5–28311–01	PROTECCION DE PATA 1	1					
6	26P–21568–00	ETIQUETA DE PRECAUCION	1					
7	4B5–2836U–10	AMORTIGUADOR DE UBICACION 2	2					
8	4B5–82552–00	TAPA DE INTERRUPTOR	1					
9	5VU–28307–00	SELLO	1					
10	4B5–2834V–00	PROTECTOR 1	1					
11	4B5–21796–01	BISAGRA	1					
12	90241–06002	PASADOR	2					
13	4B5–21797–00	BISAGRA	1					
14	90160–04008	TORNILLO REDONDO ROSCA HEMBRA	4					
15	97702–50016	TORNILLO ROSCA HEMBRA	4					
16	90338–05009	TAPON	2					
17	90183–06008	TUERCA DE RESORTE	2					
18	90202–06004	ARANDELA DE PLANA	4					
19	90119–06209	TORNILLO CON ARANDELA	2					
20	90183–05042	TUERCA DE RESORTE	16					
21	90167–05076	TORNILLO DE ROSCA HEMBRA	4					
22	90119–06212	TORNILLO CON ARANDELA	2					
23	4B5–2839N–00	SOSTEN	1					
24	90338–20113	TAPON	2					
25	90480–13567	TAPON	2					
26	90183–060A8	TUERCA DE RESORTE	8					
27	4B5–28312–00	PROTECCION DE PATA 2	1					

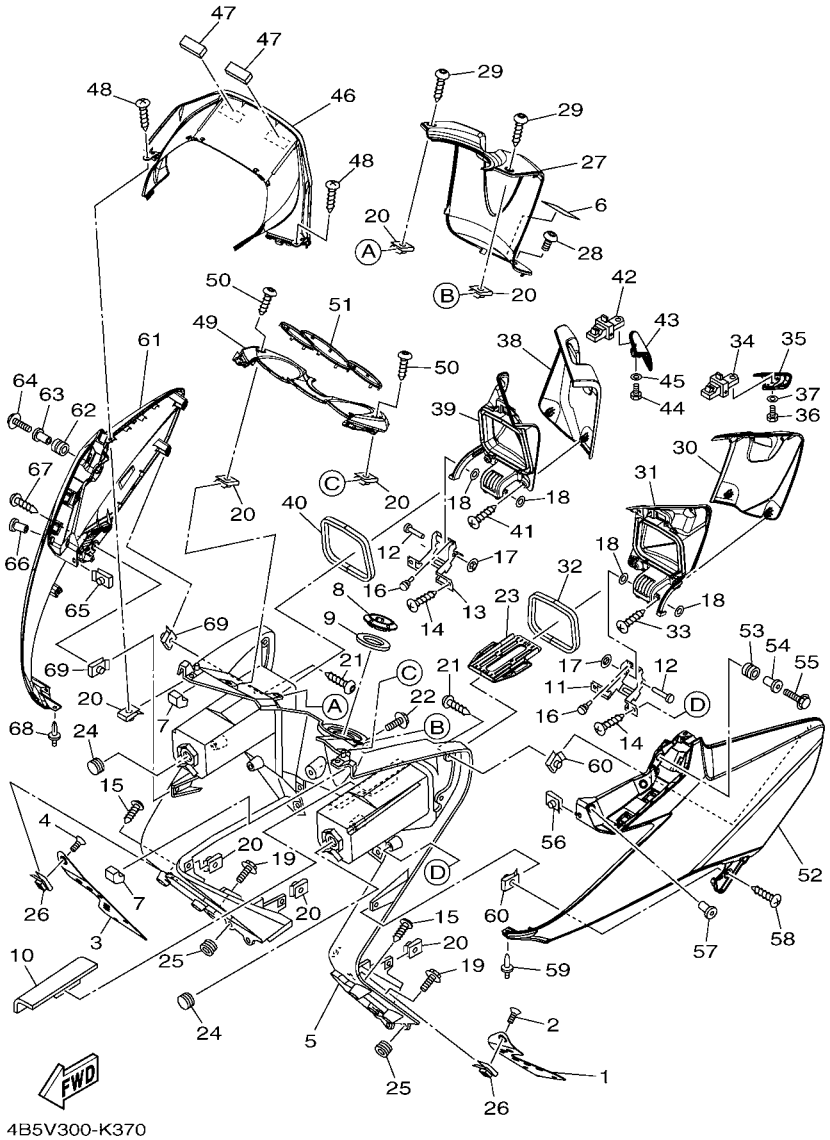

FIG. 37 PATA PROTEGIDA

REF. Nº	CODIGO Nº	DESCRIPCION	4B5V					OBSERVACIONES
28	90111–06095	TORNILLO	1					
29	90169–05003	TORNILLO	2					
30	4B5–28313–00	TAPA	1					
31	4B5–2836M–00	PANEL 3	1					
32	4B5–28371–00	AMORTIGUADOR	1					
33	90160–04008	TORNILLO REDONDO ROSCA HEMBRA	4					
34	4B5–21780–00	CERRADURA COMPLETA	1					
35	4B5–2836X–00	PERILLA, 1	1					
36	97022–05012	PERNO	1					
37	90201–05043	ARANDELA PLANA	1					
38	4B5–2839K–00	TAPA 1	1					
39	4B5–2836N–00	PANEL 4	1					
40	4B5–28371–00	AMORTIGUADOR	1					
41	90160–04008	TORNILLO REDONDO ROSCA HEMBRA	4					
42	4B5–21780–00	CERRADURA COMPLETA	1					
43	4B5–2836Y–00	PERILLA, 2	1					
44	97022–05012	PERNO	1					
45	90201–05043	ARANDELA PLANA	1					
46	4B5–2836K–00	PANEL 1	1					
47	4B5–2814E–00	GANCHO	2					
48	97702–50016	TORNILLO ROSCA HEMBRA	2					
49	4B5–28346–00	MOLDURA	1					
50	90167–05076	TORNILLO DE ROSCA HEMBRA	2					
51	4B5–2839R–00	PANEL DE ACCESORIO	1					
52	4B5–28351–01–P3	CUERPO DE COBERTURA	1					UR PARA SMX
	4B5–28351–01–P7	CUERPO DE COBERTURA	1					UR PARA BWC1
	4B5–28351–01–P5	CUERPO DE COBERTURA	1					UR PARA NMJ

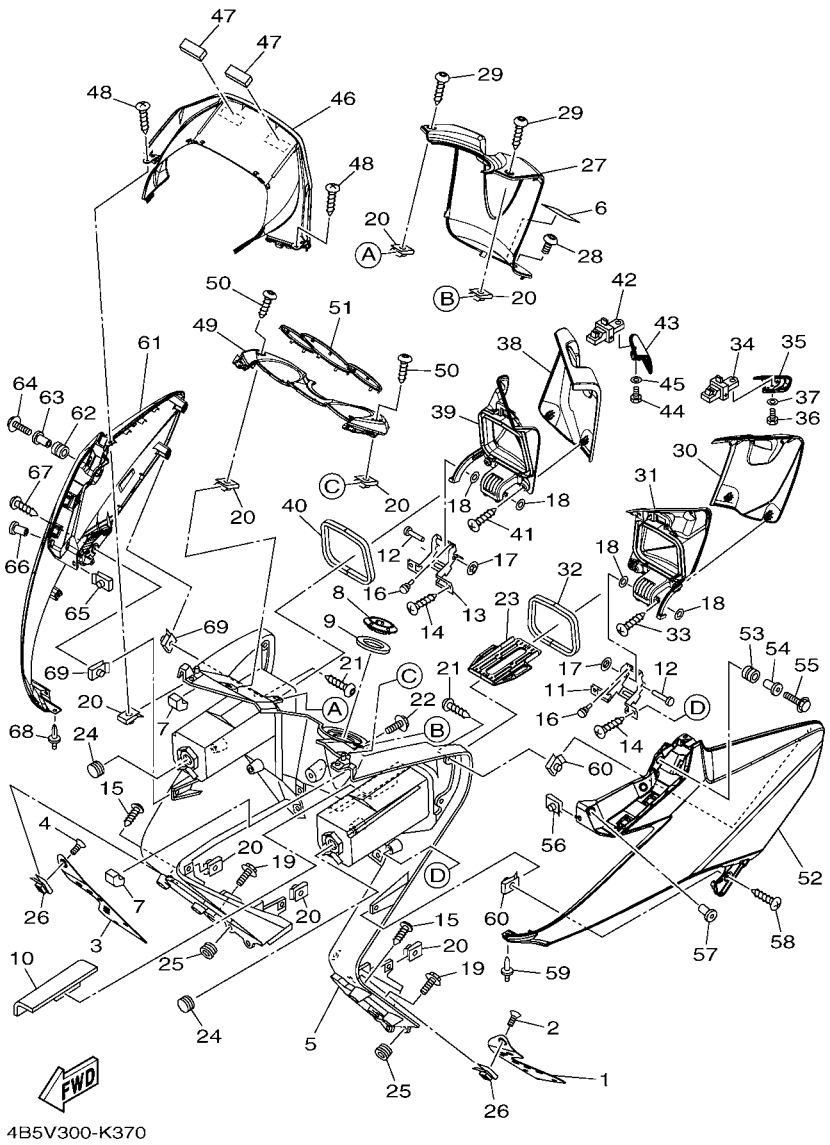

FIG. 37 PATA PROTEGIDA

REF. Nº	CODIGO Nº	DESCRIPCION	4B5V					OBSERVACIONES
53	90480–14003	TAPON	1					
54	90387–0602X	ESPACIADOR	1					
55	95802–06020	TORNILLO DE REBORDE	1					
56	90183–060A6	TUERCA DE RESORTE	3					
57	90179–05523	TUERCA	2					
58	97702–50016	TORNILLO ROSCA HEMBRA	1					
59	90269–06008	REMACHE	1					
60	90183–05042	TUERCA DE RESORTE	3					
61	4B5–28377–01–P3	CUERPO, DE COBERTURE 2	1					UR PARA SMX
	4B5–28377–01–P7	CUERPO, DE COBERTURE 2	1					UR PARA BWC1
	4B5–28377–01–P5	CUERPO, DE COBERTURE 2	1					UR PARA NMJ
62	90480–14003	TAPON	1					
63	90387–0602X	ESPACIADOR	1					
64	95802–06020	TORNILLO DE REBORDE	1					
65	90183–060A6	TUERCA DE RESORTE	3					
66	90179–05523	TUERCA	2					
67	97702–50016	TORNILLO ROSCA HEMBRA	1					
68	90269–06008	REMACHE	1					
69	90183–05042	TUERCA DE RESORTE	3					

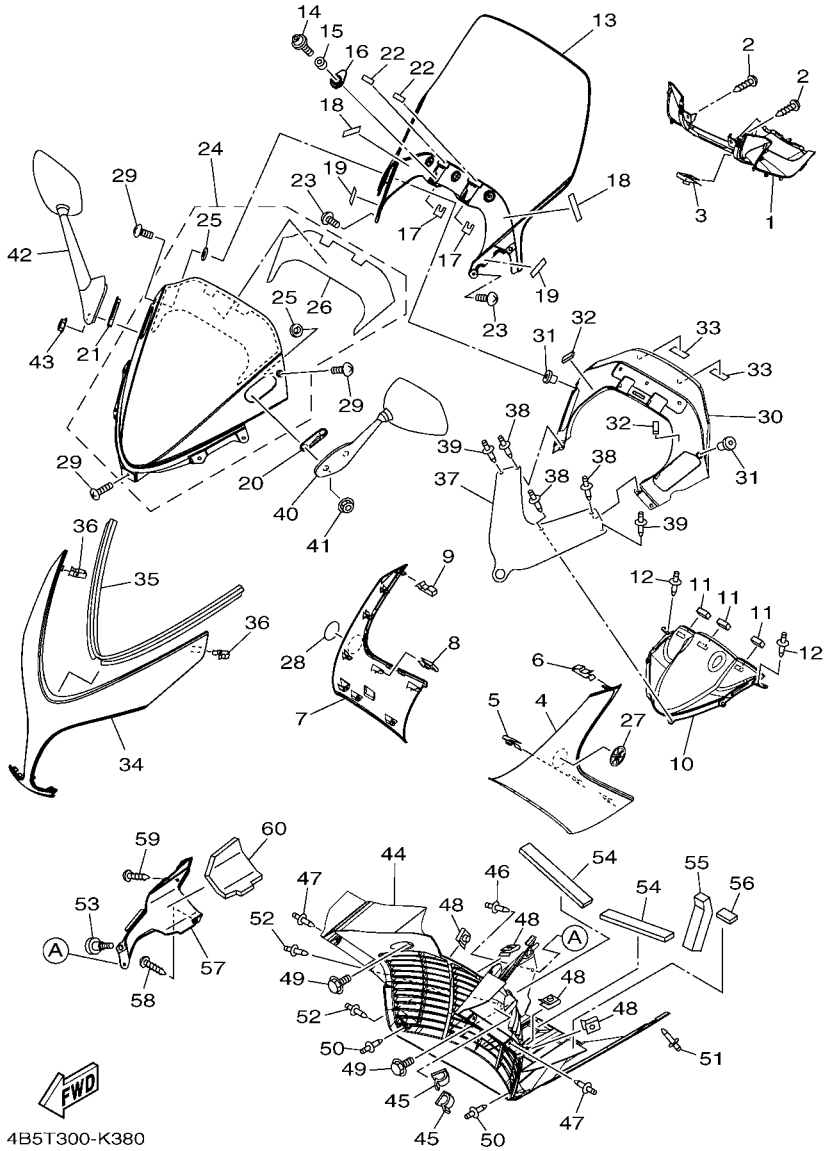

FIG. 38 PARABRISAS

REF. Nº	CODIGO Nº	DESCRIPCION	4B5V					OBSERVACIONES
1	4B5–28365–00	CUBIERTA	1					
2	97702–50016	TORNILLO ROSCA HEMBRA	2					
3	90183–060A6	TUERCA DE RESORTE	1					
4	4B5–2835U–00	PANEL 1	1					
5	90183–05042	TUERCA DE RESORTE	2					
6	5GM–28379–01	GANCHO	4					
7	4B5–2835V–00	PANEL 2	1					
8	90183–05042	TUERCA DE RESORTE	2					
9	5GM–28379–01	GANCHO	4					
10	4B5–2836L–00	PANEL 2	1					
11	4B5–2836T–00	AMORTIGUADOR DE MONTAJE 1	3					
12	90269–06001	REMACHE	2					
13	4B5–2837U–00	PARABRISAS	1					
14	90111–06105	TORNILLO	2					
15	90387–06105	ESPACIADOR	2					
16	4B5–28335–00	PLACA	2					
17	4B5–2844E–00	SELLO 3	2					
18	4B5–2847N–00	AMORTIGUADOR 8	2					
19	4B5–2847F–00	SELLO 5	2					
20	4B5–28372–00	AMORTIGUADOR	1					
21	4B5–2837K–00	AMORTIGUADOR 6	1					
22	4B5–2847P–00	AMORTIGUADOR 9	2					
23	90150–05024	TORNILLO CABEZA REDONDA	5					
24	4B5–Y284S–21	CUBIERTA 5 COMPL.	1					
25	4B5–28307–00	.SELLO	2					
26	4B5–2832P–00	.CALCOMANIA, DE BOVEDA 18	1					
27	5PW–2413B–00	EMBLEMA	1					

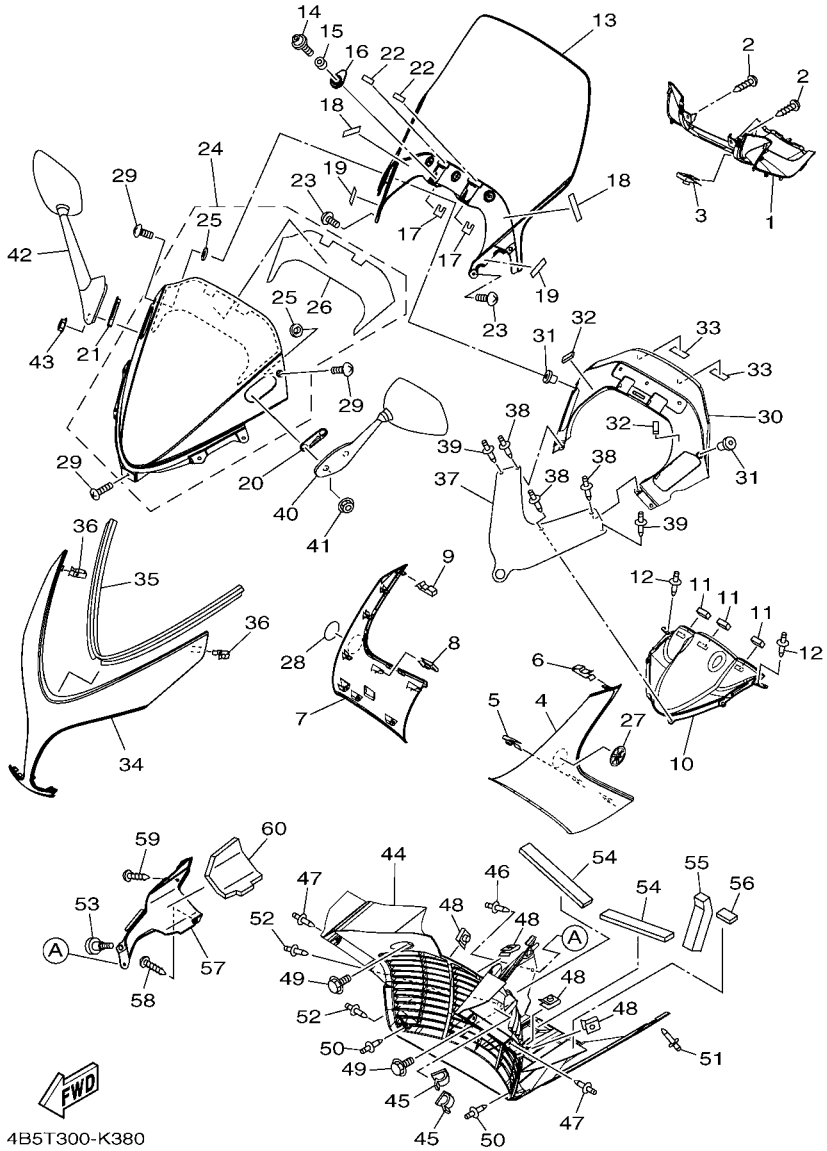

FIG. 38 PARABRISAS

REF. Nº	CODIGO Nº	DESCRIPCION	4B5V					OBSERVACIONES
28	5PW–2413B–00	EMBLEMA	1					
29	90150–05024	TORNILLO CABEZA REDONDA	7					
30	4B5–2836R–00	PANEL 5	1					
31	90179–05523	TUERCA	2					
32	4B5–2847R–00	AMORTIGUADOR 10	2					
33	4B5–2814H–00	GANCHO 1	2					
34	4B5–22865–00–P3	CUBIERTA, FRENTE	1					UR MBL2 PARA SMX
	4B5–22865–00–P6	CUBIERTA, FRENTE	1					UR PARA BWC1
	4B5–22865–00–P4	CUBIERTA, FRENTE	1					UR PARA NMJ
35	4B5–28237–00	AMORTIGUADOR 3	1					
36	5GM–28379–01	GANCHO	2					
37	4B5–28336–00	PLATO	1					
38	90269–06008	REMACHE	3					
39	90269–06008	REMACHE	2					
40	4B5–26280–20	ESPEJO COMPLETO (IZQUIERDO)	1					
41	95702–06500	TUERCA DE BRIDA	2					
42	4B5–26290–20	ESPEJO COMPLETO (DERECHO)	1					
43	95702–06500	TUERCA DE BRIDA	2					
44	4B5–21557–00	CONDUCTO DE AIRE	1					
45	90464–09009	BRIDA	2					
46	90269–06008	REMACHE	1					
47	90269–06001	REMACHE	4					
48	90183–05042	TUERCA DE RESORTE	4					
49	90119–06212	TORNILLO CON ARANDELA	2					
50	90269–06008	REMACHE	2					
51	90269–06001	REMACHE	1					
52	90269–06008	REMACHE	2					

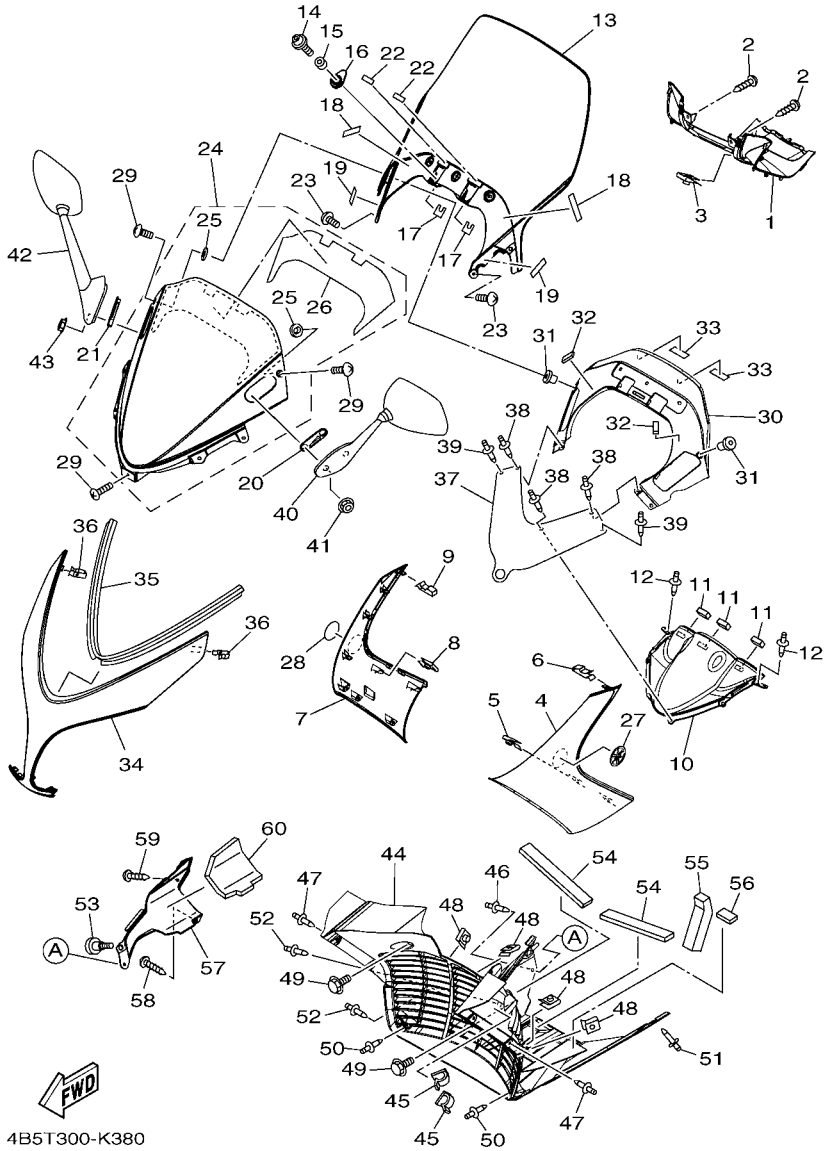

FIG. 38 PARABRISAS

REF. Nº	CODIGO Nº	DESCRIPCION	4B5V					OBSERVACIONES
53	90109–05012	PERNO	1					
54	4B5–28415–00	AMORTIGUADOR 1	2					
55	4B5–28425–00	AMORTIGUADOR 3	1					
56	4B5–28435–00	AMORTIGUADOR 4	1					
57	4B5–28395–00	CUBIERTA INFERIOR	1					
58	90167–05076	TORNILLO DE ROSCA HEMBRA	1					
59	90167–05076	TORNILLO DE ROSCA HEMBRA	1					
60	4B5–2834F–00	AMORTIGUADOR	1					

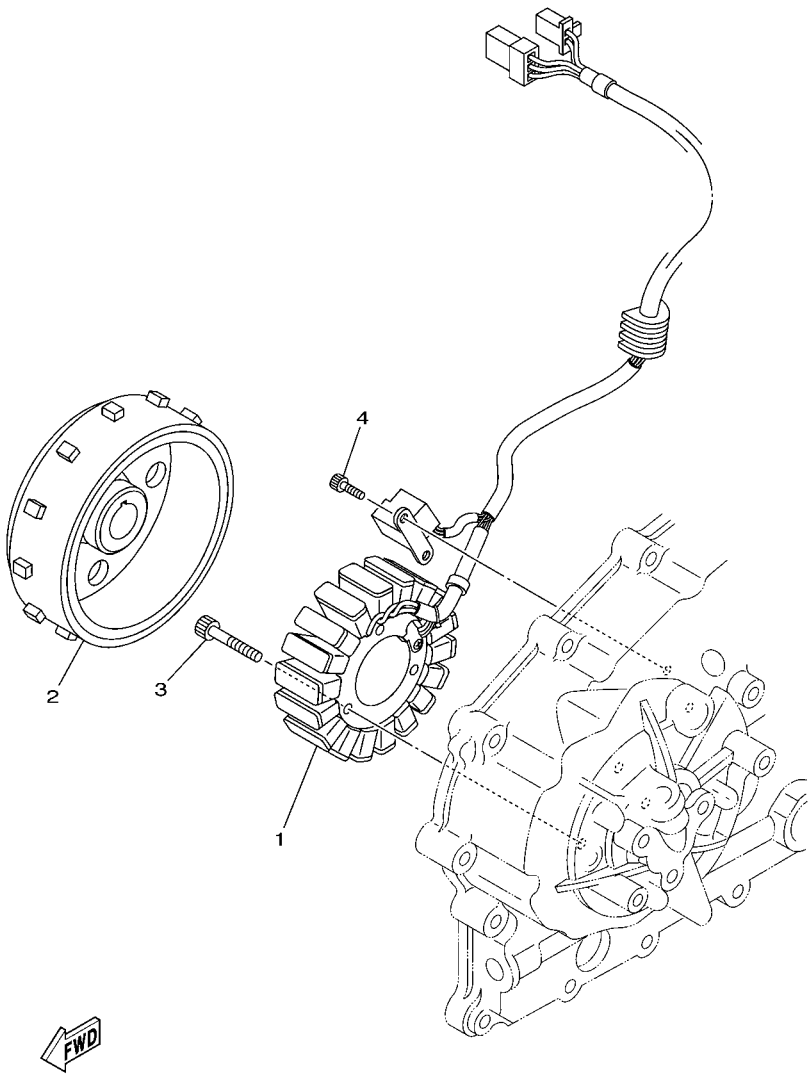

5VU1300-C380

FIG. 39 GENERADOR

REF. Nº	CODIGO Nº	DESCRIPCION	4B5V					OBSERVACIONES
1	4B5–81410–00	ESTATOR COMPLETO	1					
2	5VU–81450–01	ROTOR COMPLETO	1					
3	90110–06208	TORNILLO ALLEN	3					
4	90110–05032	TORNILLO ALLEN	2					

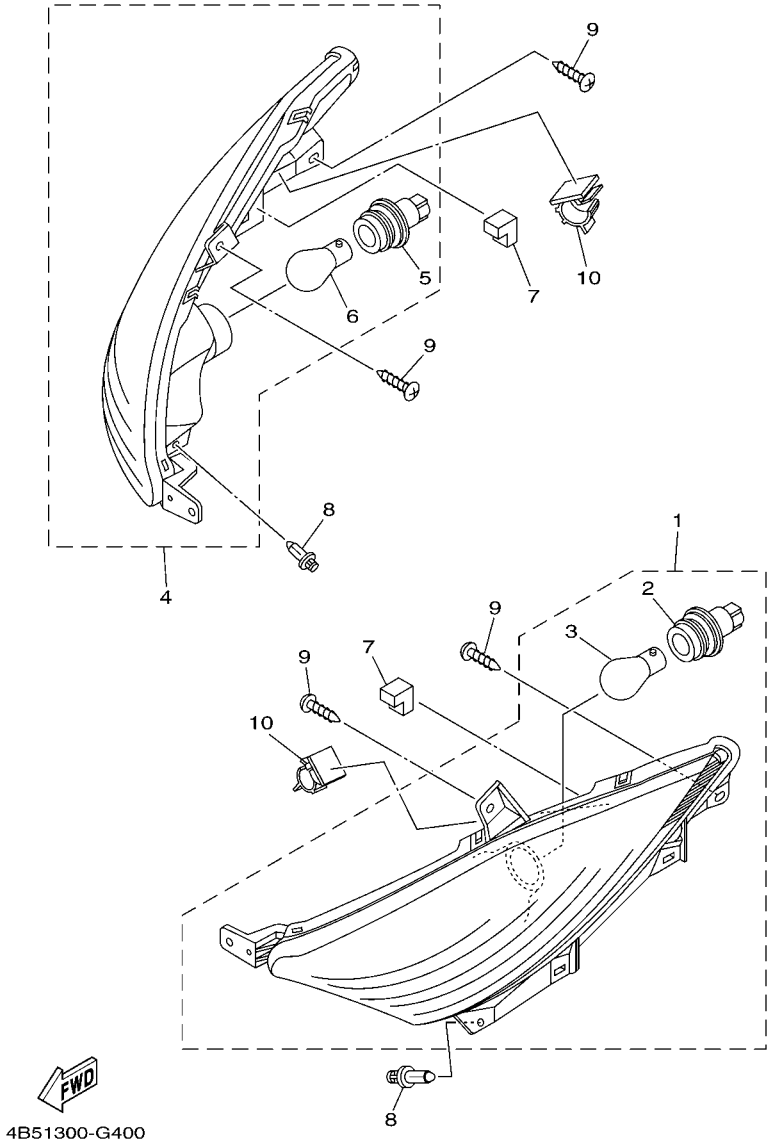

FIG. 40 LUZ DE DESTELLADOR

REF. Nº	CODIGO Nº	DESCRIPCION	4B5V					OBSERVACIONES
1	4B5–83310–00	DESTELLADOR DE LUZ DELANT.	1					
2	4B5–8331J–00	.ENCASTRE	1					
3	5RU–83331–00	.AMPOLLETA (12V-21W)	1					
4	4B5–83320–00	DESTELLADOR DE LUZ DELANT.	1					
5	4B5–8331J–00	.ENCASTRE	1					
6	5RU–83331–00	.AMPOLLETA (12V-21W)	1					
7	4B5–8338V–00	AMORTIGUADOR	2					
8	90269–06001	REMACHE	2					
9	97702–50016	TORNILLO ROSCA HEMBRA	4					
10	90464–13004	BRIDA	2					

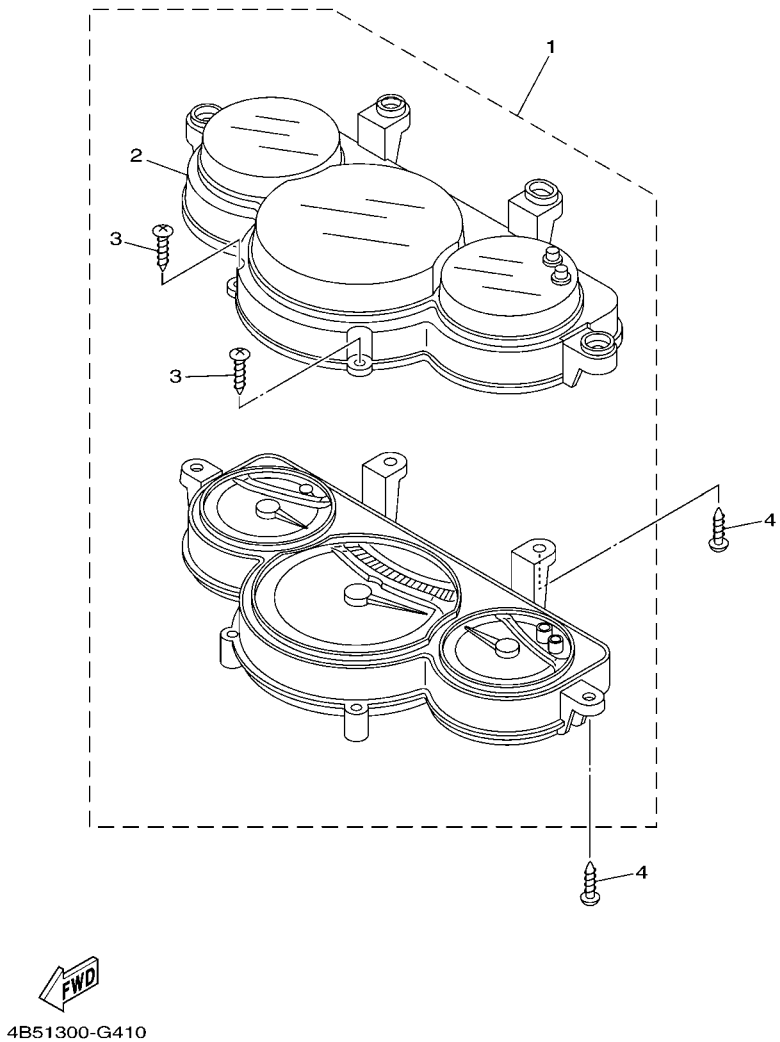

FIG. 41 MEDIDOR

REF. Nº	CODIGO Nº	DESCRIPCION	4B5V					OBSERVACIONES
1	4B5–83500–11	METRO COMPLETO (KM/H)	1					
2	4B5–83511–00	.LENTE DE VELOCIMETRO	1					
3	4AS–83616–10	.TORNILLO	2					
4	97702–50016	TORNILLO ROSCA HEMBRA	4					

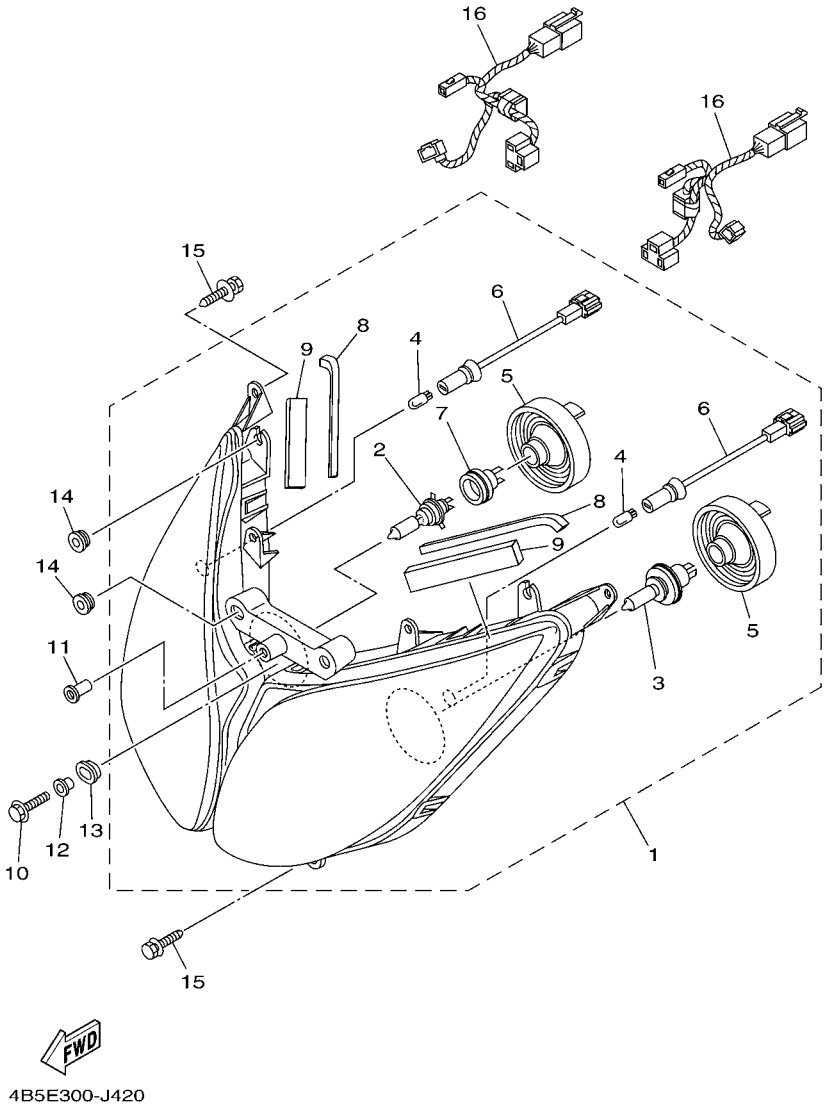

FIG. 42 FARO DELANTERO

REF. Nº	CODIGO Nº	DESCRIPCION	4B5V					OBSERVACIONES
1	4B5–84310–02	UNIDAD DE FARO DELANTERO COMPL	1					
2	4SV–84314–00	.BOMBILLA (12V-55W)	1					(H7)HALOGEN
3	8G9–84314–00	.BOMBILLA (12V-60/55W)	1					(H4)HALOGEN
4	4SV–84347–00	.BOMBILLA (12V-5W)	2					
5	5GJ–84397–00	.CUBIERTA DE ENCASTRE	2					
6	4B5–84340–00	.ENCASTRE DE CABLE COMPLETO	2					
7	4SV–84350–00	.ENCASTRE DE CABLE COMPLETO	1					
8	90520–10008	.EQUILIBRIO, CUBIERTA	2					
9	7TD–14747–00	.AMORTIGUADOR DE SILENCIADOR	2					
10	95802–06020	TORNILLO DE REBORDE	1					
11	90179–05523	TUERCA	1					
12	90387–06160	ESPACIADOR	1					
13	90480–01559	TAPON	1					
14	90480–13398	TAPON	4					
15	90119–06156	TORNILLO CON ARANDELA	6					
16	4B5–84359–00	CABLE DE FARO DELANTERO	2					

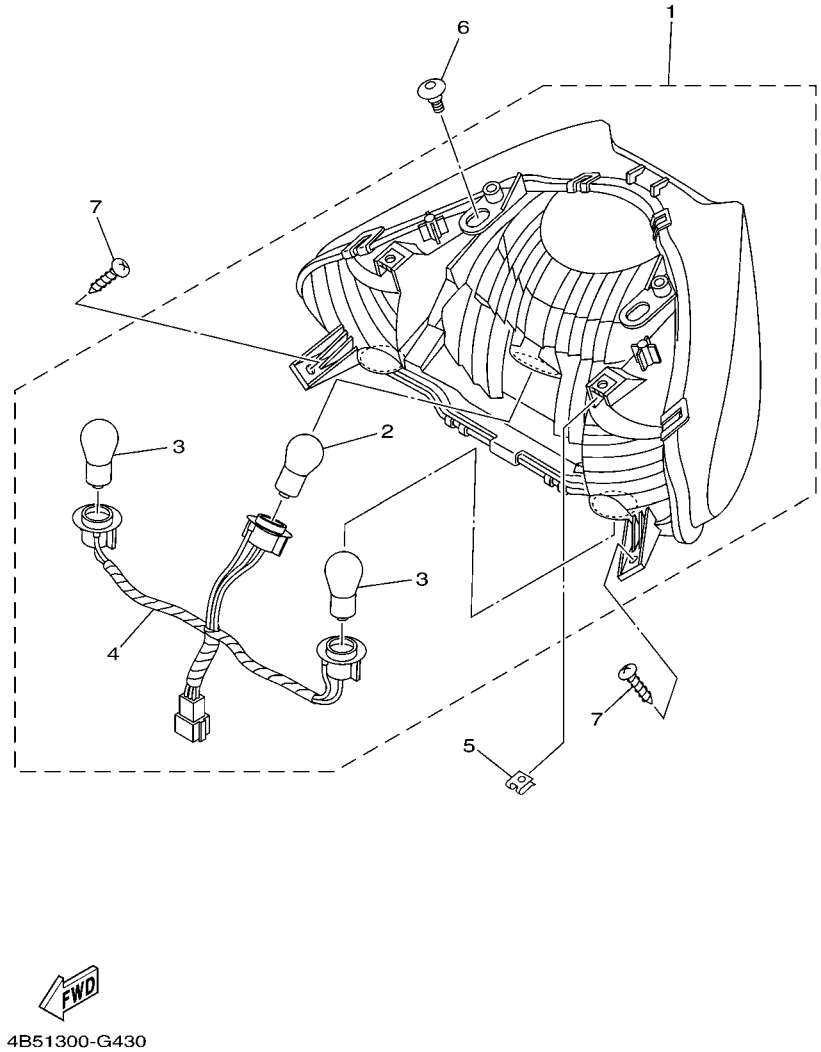

FIG. 43 LUZ DE COLA

REF. Nº	CODIGO Nº	DESCRIPCION	4B5V					OBSERVACIONES
1	4B5–84710–01	UNIDAD FARO TRASERO COMPL.	1					
2	137–84714–60	.BOMBILLA (12V-21/5W)	1					
3	5RU–83331–00	.AMPOLLETA (12V-21W)	2					
4	4B5–84312–00	.CABLE COMPLETA	1					
5	90183–05042	TUERCA DE RESORTE	2					
6	90109–06249	PERNO	2					
7	97702–50016	TORNILLO ROSCA HEMBRA	2					

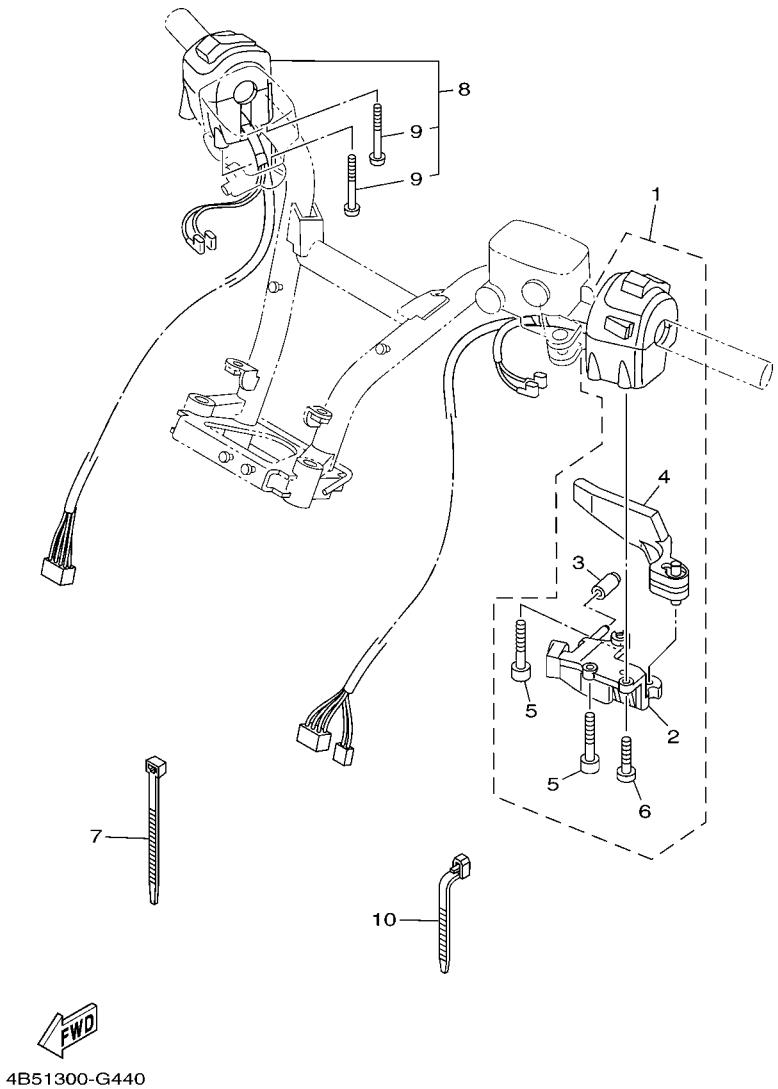

FIG. 44 INTERRUPTOR DE MANILLAR&PALANC

REF. Nº	CODIGO Nº	DESCRIPCION	4B5V					OBSERVACIONES
1	4B5–83972–02	INTERRUPTOR DE MANIJA 4	1					
2	5RB–26396–01	.SOPORTE DE AJUSTE	1					
3	5RB–13569–00	.TAPON CIEGO	1					
4	5VU–83930–00	.CIERRE DE PALANCA COMPLETO	1					
5	91317–05055	.PERNO	2					
6	98507–05012	.TORNILLO DE CABEZA PLANA	1					
7	90465–12356	BRIDA	3					
8	4B5–83963–00	INTERRUPTOR DE MANIJA 3	1					
9	98507–05050	.TORNILLO DE CABEZA PLANA	2					
10	90464–13073	BRIDA	1					

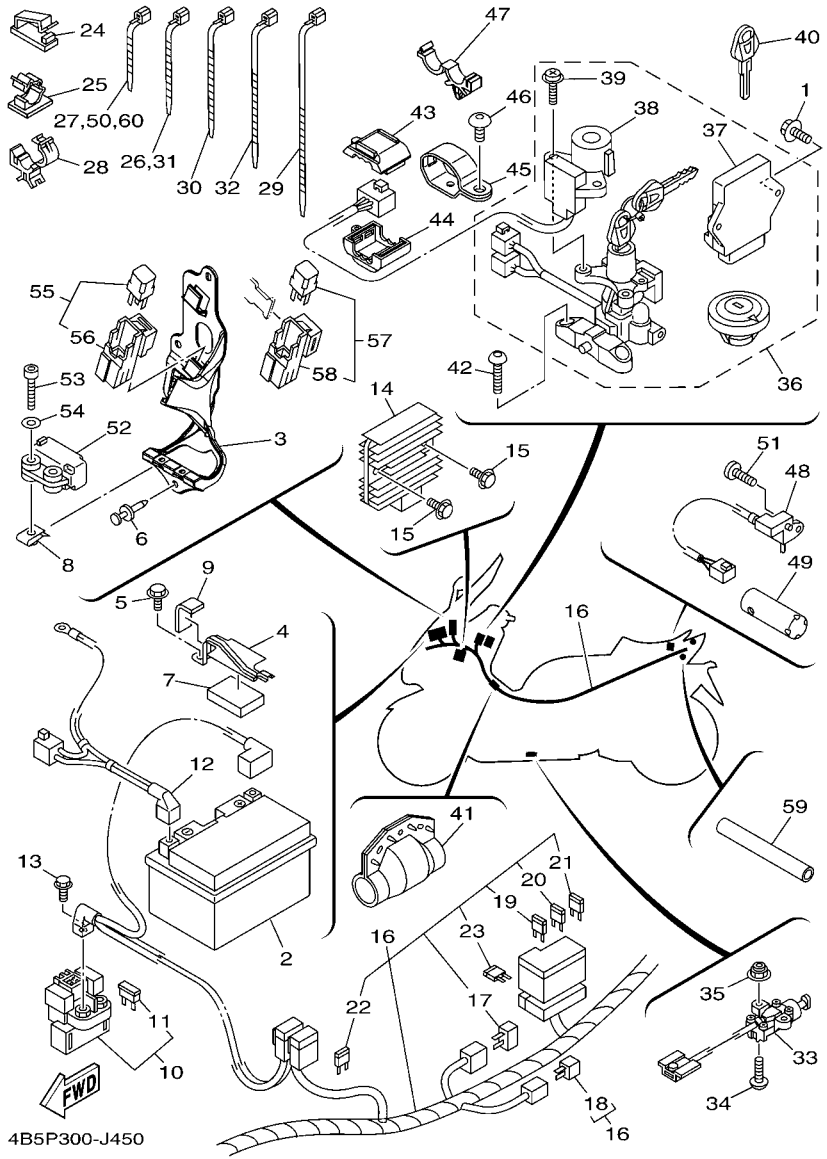

FIG. 45 EQUIPO ELECTRICO 1

REF. Nº	CODIGO Nº	DESCRIPCION	4B5V					OBSERVACIONES
1	95802–06020	TORNILLO DE REBORDE	2					
2	5VY–82100–00	BATERIA COMPLETA(YUASA YTZ10S)	1					
3	4B5–2143E–00	SOPORTE DE RELE 1	1					
4	4B5–2199G–00	SOPORTE, BATTRIA	1					
5	95822–06010	TORNILLO DE REBORDE	1					
6	90269–06081	REMACHE	3					
7	5SJ–27482–00	MOLDURA DE APOYAPIE	1					
8	90183–04039	TUERCA DE RESORTE	2					
9	5H0–8235Y–M0	AMORTIGUADOR	1					
10	4B5–81940–00	CONJUNTO ARRANCADOR RELEVO	1					
11	1AE–82151–00	.FUSIBLE (30A-BL)	2					
12	4B5–82116–10	CABLE CONDUCTOR NEGATIVO	1					
13	95022–06008	PERNO, DE BRIDA	2					
14	4XY–81960–00	RECTIFICADOR Y REGULADOR	1					
15	95802–06020	TORNILLO DE REBORDE	2					
16	4B5–82590–71	CONJUNTO DE CABLES	1					
17	4WA–81980–00	.CONJUNTO DIODO	1					
18	3WP–81980–00	.CONJUNTO DIODO	1					
19	5JJ–82151–10	.FUSIBLE (15A-BL)	3					
20	5JJ–82151–20	.FUSIBLE (20A-BL)	3					
21	5JJ–82151–30	.FUSIBLE (10A-BL)	5					
22	5JJ–82151–60	.FUSIBLE (30A-BL)	1					
23	5JJ–82151–90	.FUSIBLE (5A-BL)	2					
24	90464–13011	BRIDA	4					
25	90464–13185	BRIDA	2					
26	90464–13073	BRIDA	1					
27	90464–13077	BRIDA	2					

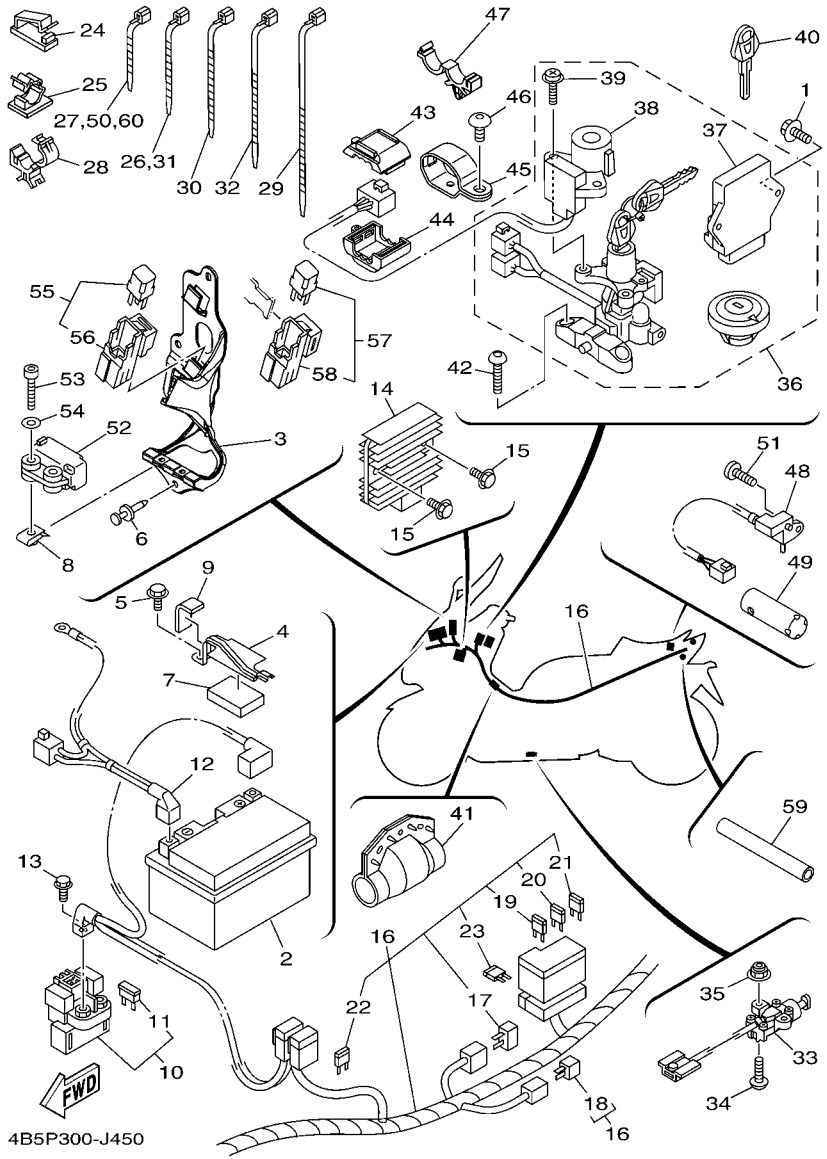

FIG. 45 EQUIPO ELECTRICO 1

REF. Nº	CODIGO Nº	DESCRIPCION	4B5V					OBSERVACIONES
28	90464–15192	BRIDA	1					
29	90460–15126	BRIDA, DE UNION	1					
30	90464–15195	BRIDA	2					
31	90464–13073	BRIDA	1					
32	90464–12045	BRIDA	1					
33	4B5–82566–00	INTERRUPTOR	1					
34	92012–05020	PERNO	2					
35	95602–05200	TUERCA DE AUTO-CIERRE	2					
36	4B5–W8250–40	JUEGO DE INMOVILIZADOR	1					
37	4B5–8591A–10	.UNIDAD CONTROL	1					
38	4B5–8255P–20	.UNIDAD INMOVILIZADORA	1					
39	5VU–82113–01	.TORNILLO	2					
40	5SL–82511–08	BLANK KEY	1					AP
41	5RU–8252U–00	CUBIERTA	1					
42	90149–08035	TORNILLO DE REGLAJE	2					
43	5VS–8258J–00	CAJA DE CONECTOR 1	1					
44	5VS–8259J–00	CAJA DE CONECTOR 2	1					
45	4B5–82729–00	SOPORTE DE CIERRE	1					
46	90111–06109	TORNILLO	1					
47	90464–16006	BRIDA	1					
48	4B5–81860–00	INTERRUPTOR COMPL	1					
49	4B5–82599–00	CUBIERTA DE CONECTOR	1					
50	90464–13077	BRIDA	1					
51	98902–03008	TORNILLO DE AJUSTE	1					
52	5VU–82576–01	SENSOR ANGULO DE INCLINATION	1					
53	91312–04025	TORNILLO	2					
54	90201–04325	ARANDELA PLANA	2					

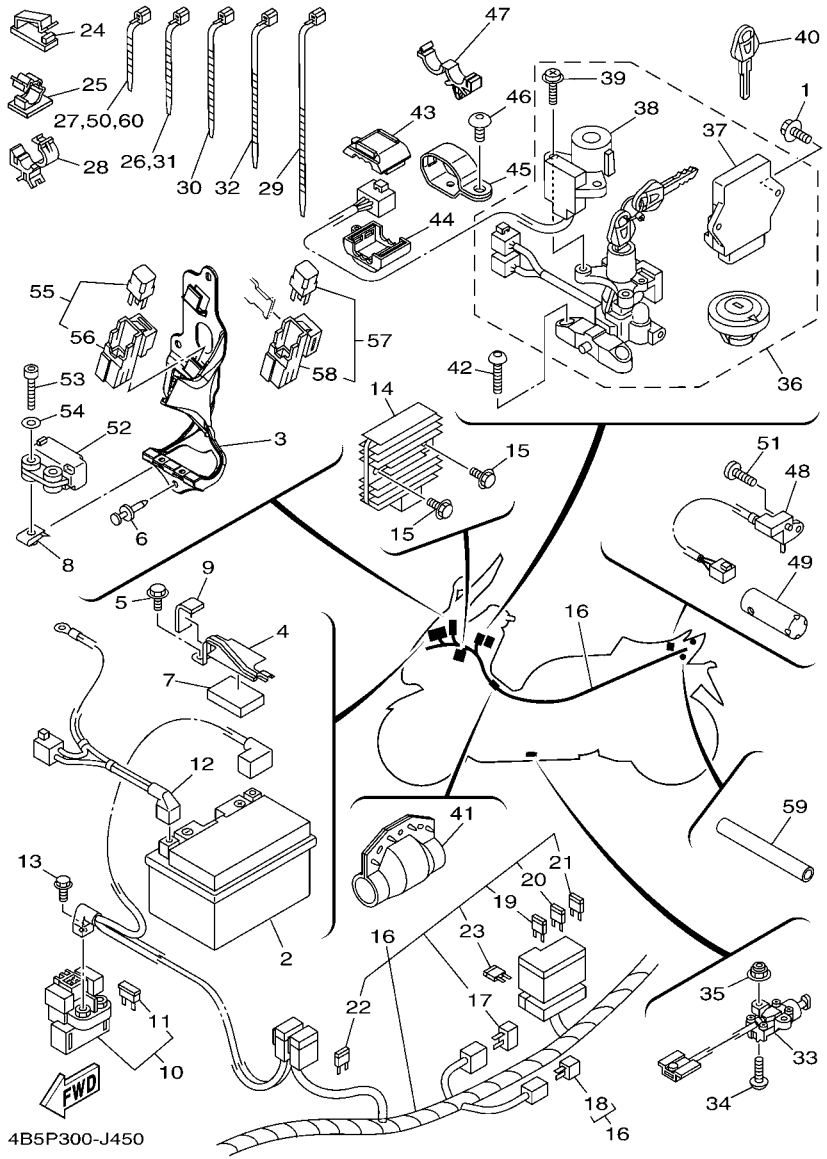

FIG. 45 EQUIPO ELECTRICO 1

REF. Nº	CODIGO Nº	DESCRIPCION	4B5V					OBSERVACIONES
55	5EA–81950–20	RELE COMPLETO	3					
56	5EA–81952–00	.SOSTEN DE RELE	1					
57	5JJ–81950–20	RELE COMPLETO	1					
58	5JJ–81952–00	.SOSTEN DE RELE	1					
59	90446–15377	TUBO RESEIRADERO	1					
60	90464–13077	BRIDA	1					

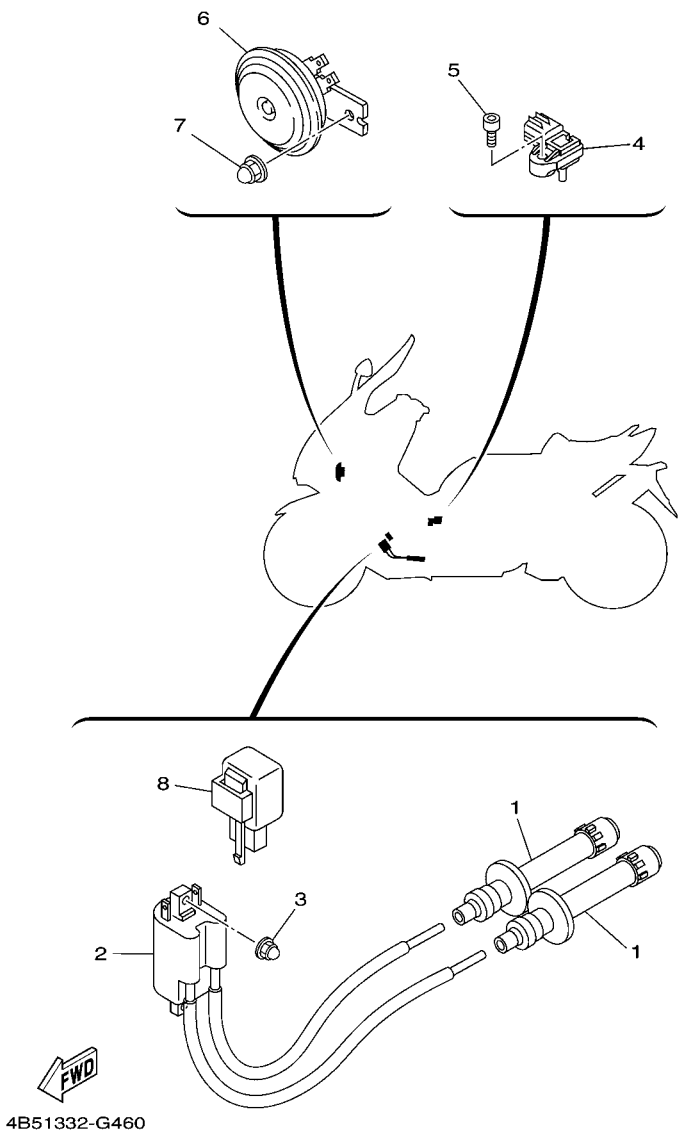

FIG. 46 EQUIPO ELECTRICO 2

REF. Nº	CODIGO Nº	DESCRIPCION	4B5V					OBSERVACIONES
1	5VU–82370–00	TAPON DE BUJIA COMPLT	2					
2	4B5–82320–00	BOBINA DE ENCENDIDO COMPLETA	1					
3	90176–06014	TUERCA CORONA	2					
4	2C0–82380–00	SENSOR DE PRESION	1					
5	91312–05020	TORNILLO	1					
6	4B5–83371–00	BOCINA	1					
7	90176–08008	TUERCA CORONA	1					
8	3GM–83350–01	RELE DE DESTELLADOR COMPL.	1					

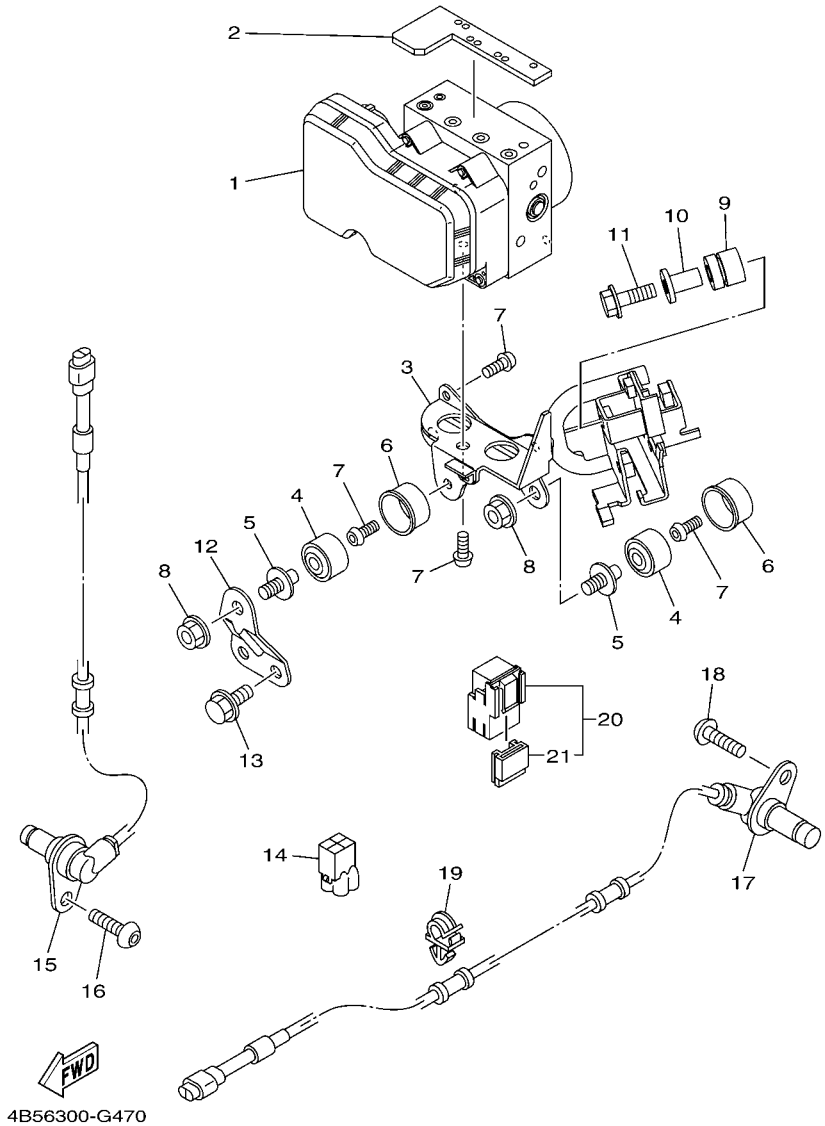

FIG. 47 EQUIPO ELECTRICO 3

REF. Nº	CODIGO Nº	DESCRIPCION	4B5V					OBSERVACIONES
1	4B5–85930–09	UNIDAD DE HIDRAULICA	1					
2	4B5–21652–00	PROTECTOR	1					
3	4B5–2175T–00	SOPORTE 1	1					
4	5CG–85113–00	AMORTIGUADOR	3					
5	5CG–2535E–00	PERNO	3					
6	3P6–85916–00	TAPA	3					
7	92012–06010	PERNO	6					
8	95702–08500	TUERCA DE BRIDA	3					
9	90480–14182	TAPON	1					
10	90387–08M25	ESPACIADOR	1					
11	95822–08030	TORNILLO DE REBORDE	1					
12	4B5–2175U–00	SOPORTE 2	1					
13	95822–08012	TORNILLO DE REBORDE	2					
14	3YA–82378–00	CONECTOR	1					
15	4B5–85970–00	CONJUNTO DE CABLES	1					
16	92014–06014	PERNO	1					
17	4B5–85980–00	CONJUNTO DE CABLES	1					
18	92014–06014	PERNO	1					
19	90464–08051	BRIDA	3					
20	5EA–81950–20	RELE COMPLETO	1					
21	5EA–81952–00	.SOSTEN DE RELE	1					

CODIGO Nº	REF. Nº
4B5–11101–01	1 – 1
5GJ–11133–10	1 – 2
4B5–11166–00	1 – 19
5GJ–11181–00	1 – 17
15B–11190–00	1 – 18
5GJ–11193–01	1 – 22
5GJ–11195–00	1 – 23
812–11198–00	18 – 7
214–11198–01	11 – 7
5GJ–11312–00	2 – 19
5GJ–11351–01	1 – 27
5VU–11400–00	2 – 1
5GJ–11416–00	2 – 10
5GJ–11416–10	2 – 10
5GJ–11416–20	2 – 10
5GJ–11416–30	2 – 10
5GJ–11416–40	2 – 10
5GJ–11416–A0	2 – 10
5GJ–11417–00	2 – 11
5GJ–11417–10	2 – 11
5GJ–11417–20	2 – 11
5GJ–11417–30	2 – 11
5GJ–11417–40	2 – 11
5GJ–11417–A0	2 – 11
5GJ–11455–10	2 – 17
5GJ–11456–00	18 – 24
5GJ–11603–00	2 – 13
5VU–11631–00	2 – 12
5VU–11633–00	2 – 14
5GJ–11642–10–A0	2 – 16
5VU–11650–00	2 – 2
5VU–11654–00	2 – 3
4X7–11654–01	2 – 7
5GJ–11656–00	2 – 5
	2 – 9
5GJ–11656–10	2 – 5
	2 – 9
5GJ–11656–20	2 – 5
	2 – 9
5GJ–11656–30	2 – 5
	2 – 9
5GJ–11660–11	2 – 6
5GJ–12111–00	3 – 1
4GY–12113–00	3 – 4
1HX–12118–00	3 – 6
4TV–12119–00	3 – 7
5GJ–12121–01	3 – 2
5EB–12126–00	3 – 3

CODIGO Nº	REF. Nº
5EB–12127–00	3 – 5
5EB–12153–09	3 – 9
5EB–12153–10	3 – 9
1HX–12168–00	3 – 8
1HX–12168–20	3 – 8
1HX–12168–40	3 – 8
1HX–12168–60	3 – 8
1HX–12168–80	3 – 8
1HX–12168–A0	3 – 8
1HX–12168–F0	3 – 8
1HX–12168–H1	3 – 8
1HX–12168–K1	3 – 8
1HX–12168–M1	3 – 8
1HX–12168–R1	3 – 8
1HX–12168–U1	3 – 8
1HX–12168–W1	3 – 8
1HX–12168–Y1	3 – 8
1HX–12169–11	3 – 8
1HX–12169–31	3 – 8
1HX–12169–50	3 – 8
1HX–12169–70	3 – 8
1HX–12169–90	3 – 8
1HX–12169–E0	3 – 8
1HX–12169–G0	3 – 8
1HX–12169–J0	3 – 8
1HX–12169–L0	3 – 8
1HX–12169–N0	3 – 8
1HX–12169–T0	3 – 8
5VU–12170–10	4 – 1
5VU–12180–10	4 – 2
15B–12210–10	4 – 5
15B–12213–00	4 – 6
5BE–12241–00	4 – 4
5VU–12251–00	4 – 8
5GJ–12252–00	4 – 9
4B5–12405–00	6 – 10
4JH–12410–00	6 – 3
4B5–12413–00	6 – 4
15B–12420–00	5 – 1
5VU–12421–00	5 – 2
5GJ–12422–02	5 – 7
11H–12438–10	5 – 5
1WG–12439–00	5 – 8
5GJ–1243A–00	6 – 26
4B5–1243E–00	6 – 27
4B5–1243F–00	8 – 31
4B5–1244G–00	8 – 33
5VU–12450–00	5 – 6

CODIGO Nº	REF. Nº
4B5–12461–00	6 – 8
5SL–12462–00	6 – 23
4B5–12476–00	6 – 20
4B5–12477–00	6 – 21
5VU–12478–00	6 – 9
4B5–12481–00	5 – 14
4B5–12482–00	5 – 15
4B5–12483–00	6 – 1
4B5–12484–00	6 – 6
4B5–12485–00	6 – 19
5RU–12491–00	29 – 14
5Y9–12491–00	21 – 9
4B5–12551–00	6 – 34
5GJ–12589–00	6 – 33
5GJ–12591–00	6 – 24
5VU–12611–00	6 – 12
4B5–12620–00	6 – 11
5GJ–12675–00	6 – 14
3LD–13113–00	7 – 14
5GJ–13161–00	7 – 3
5GJ–13300–00	7 – 1
5GJ–13405–00	7 – 8
5GJ–13410–00	7 – 10
22F–13411–01	7 – 13
5DM–13440–00	7 – 21
4B5–13470–00	7 – 17
5JW–13473–00	7 – 18
5GJ–13475–00	7 – 6
4G0–13490–01	7 – 22
4B5–13545–00	8 – 27
15B–13556–00	8 – 25
5RB–13569–00	44 – 3
5VU–13586–01	8 – 1
5VU–13596–01	8 – 2
4B5–13750–00	9 – 1
4B5–13907–00	26 – 6
4B5–13930–00	8 – 22
5JW–14104–00	9 – 6
5CA–14147–00	8 – 23
84M–14169–00	9 – 2
8CC–14216–10	9 – 4
4B5–14411–00	8 – 7
4B5–14412–00	8 – 8
4B5–1441A–00	8 – 12
5CA–14435–00	8 – 20
4B5–14437–00	8 – 15
4B5–1443A–00	8 – 16
4B5–14451–00	8 – 17

CODIGO Nº	REF. Nº
48U–14452–00	13 – 25
4B5–14452–00	8 – 9
4B5–14453–00	8 – 14
4B5–14457–00	8 – 10
4B5–14462–00	8 – 13
5VX–14503–00	9 – 5
4BR–14613–00	10 – 26
4B5–14629–00	10 – 9
4B5–1465R–00	10 – 5
5VU–1465T–00	10 – 6
5VU–1465U–00	10 – 7
4B5–1465V–00	10 – 25
4B5–14711–31	10 – 1
4B5–14718–00	10 – 20
4B5–1471M–00	10 – 2
4B5–14728–00	10 – 23
4B5–14738–00	10 – 24
7TD–14747–00	42 – 9
5GM–14766–00	10 – 12
5RU–14799–00	10 – 8
4B5–15100–09	11 – 1
5GJ–15113–00	13 – 9
36Y–15189–00	12 – 9
4H7–15189–00	1 – 29
	11 – 9
15B–15191–00	13 – 7
4B5–15316–00	12 – 19
5GJ–1531A–00	18 – 39
4B5–15326–00	13 – 26
4B5–15335–00	12 – 20
5GJ–15335–00	18 – 10
5GJ–15337–00	12 – 21
5VU–15338–00	18 – 11
2H7–15361–00	12 – 2
5GJ–15362–01	18 – 33
5GJ–15363–10	12 – 14
3ES–15371–00	18 – 38
4XM–15383–00	16 – 12
5GJ–15383–00	16 – 30
4B5–15407–00	13 – 1
5GJ–15408–00	13 – 24
5GJ–15411–02	12 – 1
5GJ–15414–00	12 – 3
4B5–15415–00	12 – 16
5GJ–15417–00	12 – 4
5GJ–15418–00	18 – 8
5GJ–15421–01	13 – 11
4B5–15423–00	13 – 21

CODIGO Nº	REF. Nº
5GJ–1542A–00	13 – 19
5GJ–1542B–00	13 – 27
5GJ–15431–00	13 – 8
5GJ–15451–01	12 – 11
5GJ–15453–01	12 – 6
5GJ–15461–01	13 – 12
4B5–15473–00	13 – 3
5GJ–15474–00	13 – 6
15B–15481–00	11 – 6
3KJ–15481–00	12 – 18
	12 – 24
	13 – 20
	13 – 28
	13 – 31
	18 – 9
5GJ–15486–00	12 – 17
4B5–15492–00	13 – 18
5GJ–15499–10	12 – 22
	13 – 29
22U–15512–00	14 – 1
5GJ–15517–00	14 – 4
36Y–15521–01	14 – 2
4NK–15590–00	14 – 3
5GJ–15789–00	12 – 23
	13 – 30
5VU–16110–00	15 – 1
5GJ–16139–00	18 – 18
5VU–16151–00	17 – 2
5GJ–16321–10	15 – 11
5GJ–16324–00	15 – 13
5GJ–16325–10	15 – 12
5GJ–16334–00	15 – 16
5VU–16371–00	15 – 5
5GJ–16510–10	15 – 7
5GJ–16520–00	15 – 9
5GJ–16529–00	15 – 18
5GJ–16533–00	15 – 10
5GJ–16537–00	15 – 17
5GJ–16537–10	15 – 17
5GJ–16537–20	15 – 17
5GJ–16537–30	15 – 17
4B5–16539–00	15 – 14
5GJ–16540–00	15 – 8
5GJ–16550–00	15 – 15
5VU–17111–00	17 – 3
5GJ–17211–00	17 – 6
5VU–17411–00	17 – 1
5GJ–17421–00	17 – 5

CODIGO Nº	REF. Nº
5GJ–17451–00	18 – 16
5GJ–17452–00	18 – 20
5GJ–17459–00	18 – 21
4B5–17469–00	18 – 25
5GJ–17523–00	18 – 19
15B–17524–00	18 – 1
5GJ–17541–10	18 – 5
5GJ–17542–10	18 – 12
5GJ–17554–00	18 – 13
4B5–17611–00	16 – 8
5VU–17623–00	16 – 5
5VU–17632–00	16 – 4
5VU–17641–00	16 – 7
4WV–17644–00	16 – 22
5GJ–17649–00	16 – 9
5VU–17653–00	16 – 6
5VU–17660–00	16 – 15
4CW–17664–00	16 – 19
5GJ–17670–01	16 – 16
5VU–17681–00	16 – 25
5GJ–17690–00	16 – 21
5GJ–17818–02	18 – 14
4B5–21110–02	19 – 1
4B5–21116–00	19 – 17
4B5–2112J–00	19 – 43
4B5–2113B–00	19 – 3
4B5–21147–11	19 – 42
4B5–2117A–00	19 – 62
4B5–2117F–00	19 – 39
4B5–2117G–00	19 – 22
4B5–2117M–00	19 – 40
4B5–21190–01	19 – 10
4B5–2119A–00	19 – 58
5VX–21279–10	19 – 2
4B5–21345–01	19 – 60
4B5–21398–10	28 – 37
4B5–2139W–00	19 – 38
4B5–2141A–00	19 – 47
4B5–2141E–00	19 – 51
4B5–2142K–01	19 – 20
4B5–2143E–00	45 – 3
4B5–21445–00	19 – 18
4B5–2144H–00	19 – 54
4B5–2145H–00	19 – 56
4B5–21511–00–P3	20 – 1
4B5–21511–00–P5	20 – 1
4B5–21511–00–P7	20 – 1
4B5–2152R–00	22 – 25

CODIGO Nº	REF. Nº
3WF–2153E–40	20 – 9
3WF–2153E–70	20 – 9
4B5–21556–00	20 – 2
4B5–21557–00	38 – 44
26P–21568–00	37 – 6
5VU–21578–00	20 – 10
2TV–21639–00	28 – 33
4B5–2163A–00	28 – 32
4B5–21652–00	47 – 2
5VU–21668–00	28 – 38
4B5–21669–00	22 – 16
4B5–21711–00–P3	21 – 1
4B5–21711–00–P5	21 – 1
4B5–21711–00–P7	21 – 1
4B5–21717–00	21 – 3
	21 – 8
4B5–2171A–00–P3	21 – 15
4B5–2171A–00–P5	21 – 15
4B5–2171A–00–P7	21 – 15
4B5–2171H–00	19 – 12
4B5–2171L–00–P1	22 – 19
4B5–2171L–00–P5	22 – 19
4B5–2171L–00–P8	22 – 19
4B5–2171M–01–P1	22 – 21
4B5–2171M–01–P5	22 – 21
4B5–2171M–01–P8	22 – 21
4B5–21721–00–P3	21 – 6
4B5–21721–00–P5	21 – 6
4B5–21721–00–P7	21 – 6
4B5–2172K–00	22 – 34
4B5–21731–00–P2	22 – 1
4B5–21731–00–P4	22 – 1
4B5–21732–00	22 – 2
	22 – 7
5GJ–2173B–20	21 – 2
	21 – 7
4B5–2173M–00	28 – 6
4B5–21741–00–P2	22 – 6
4B5–21741–00–P4	22 – 6
4B5–21747–00	21 – 14
4B5–2174X–00	21 – 12
4D9–2174X–00	19 – 11
4B5–2174Y–00	21 – 13
4JP–21753–00	26 – 17
4B5–2175N–00	21 – 19
4B5–2175T–00	47 – 3
4B5–2175U–00	47 – 12
4B5–2177B–00	21 – 21

CODIGO Nº	REF. Nº
4B5–21780–00	37 – 34
	37 – 42
4B5–21796–01	37 – 11
4B5–21797–00	37 – 13
1AA–21815–00	22 – 41
4B5–21816–00	22 – 43
4B5–21871–00	22 – 39
1AA–21874–00	22 – 42
4B5–2199G–00	45 – 4
15B–22141–00	23 – 4
1J7–22143–00	23 – 6
4B5–22171–11–33	23 – 1
4KM–2219X–00	23 – 7
5VU–22210–00	23 – 15
4B5–22243–00	23 – 18
4AA–22259–40	23 – 16
1D6–22358–00	28 – 9
4B5–22426–00	23 – 13
4B5–22865–00–P3	38 – 34
4B5–22865–00–P4	38 – 34
4B5–22865–00–P6	38 – 34
4B5–23102–00	25 – 3
4B5–23103–00	25 – 21
4B5–23110–00	25 – 5
	25 – 23
3TJ–23111–00	25 – 19
	25 – 37
5WM–23118–00	25 – 18
	25 – 36
5EB–23125–00	25 – 8
	25 – 26
4B5–23126–00	25 – 4
4B5–23136–00	25 – 22
4B5–23141–00	25 – 16
	25 – 34
4PU–23144–00	25 – 12
	25 – 30
4PU–23145–01	25 – 10
	25 – 28
4V4–23146–L0	25 – 9
	25 – 27
3LR–23149–00	25 – 17
	25 – 35
4V4–23153–L0	25 – 11
	25 – 29
509–23158–L0	25 – 14
	25 – 32
4B5–23170–00	25 – 7

CODIGO Nº	REF. Nº
4B5–23170–00	25 – 25
5EA–23171–30	25 – 6
	25 – 24
4YR–23173–00	25 – 13
	25 – 31
4B5–2317J–00	19 – 36
278–23181–50	25 – 15
	25 – 33
4V4–23188–L0	25 – 20
	25 – 38
4B5–23317–00	30 – 28
4PU–2331G–00	25 – 1
4B5–23340–10	25 – 2
4B5–23377–00	24 – 1
4XV–23415–01	24 – 9
4XV–23418–00	24 – 6
3FV–23462–00	25 – 42
4B5–23818–00	24 – 2
4B5–24110–00	26 – 1
4B5–24129–01–33	21 – 37
4B5–24129–01–P0	21 – 37
4B5–24135–00	26 – 23
5VU–24135–00	26 – 14
4B5–24139–01–33	21 – 38
4B5–24139–01–P0	21 – 38
5PW–2413B–00	38 – 27
	38 – 28
4B5–24141–00	26 – 20
4B5–2414A–00	26 – 16
5CA–2414G–01	26 – 11
5RB–24180–00	26 – 22
22W–24181–00	10 – 21
4B5–24181–00	26 – 4
4B5–24182–00	26 – 7
4B5–24184–00	26 – 8
4B5–24185–10	26 – 9
3VD–24188–00	19 – 33
4BP–24188–00	19 – 35
	26 – 5
31A–24188–01	19 – 13
4B5–24217–00	21 – 30
4B5–24313–00	26 – 19
4B5–24314–00	26 – 25
4B5–24318–00	26 – 18
4B5–24491–00	26 – 10
54K–24602–00	26 – 2
4B5–24718–20	27 – 3
5SL–24723–00	27 – 5

CODIGO Nº	REF. Nº
4B5–24726–00	27 – 12
4B5–24728–20	27 – 4
4B5–24730–51	27 – 1
4B5–24731–00	27 – 2
4B5–24737–00	28 – 2
4B5–2473F–00	21 – 24
4B5–2473R–01	28 – 1
4B5–2473T–01–33	21 – 25
4B5–2473T–01–P0	21 – 25
22W–24741–00	19 – 31
4B5–24747–00	28 – 14
4B5–2474A–01–P3	28 – 15
4B5–2474A–01–P8	28 – 15
4B5–2474A–01–P9	28 – 15
4B5–2474E–00	27 – 13
4B5–2474W–01–P3	28 – 19
4B5–2474W–01–P5	28 – 19
4B5–2474W–01–P8	28 – 19
4B5–24752–00	27 – 8
5GJ–24754–01	21 – 27
4HC–24758–00	21 – 28
4B5–2475K–00	28 – 31
4B5–2475U–00	27 – 19
4B5–24762–00	21 – 33
4B5–24769–00	27 – 16
4B5–2476U–00	28 – 18
	28 – 22
5GJ–24774–00	21 – 32
4B5–24779–00	27 – 17
4B5–2477F–00	21 – 26
4B5–24780–20	28 – 23
4B5–2478D–00	28 – 26
4B5–2478G–02	27 – 21
4B5–24790–01	27 – 10
4B5–24791–00	27 – 11
4B5–2482H–00	28 – 12
5EA–25117–00	29 – 2
4B5–2514A–00	30 – 3
4B5–25168–31	29 – 1
4B5–2517A–00	29 – 10
4B5–2517G–00	29 – 5
	31 – 6
4XV–25181–10	29 – 11
4B5–25183–00	29 – 13
4B5–25317–01	31 – 4
5VU–25333–00	33 – 1
4B5–25338–31	31 – 1
5CG–2535E–00	47 – 5

CODIGO Nº	REF. Nº
5GJ–25366–00	31 – 11
4B5–25377–10	31 – 15
4B5–2537A–00	31 – 14
5GJ–25381–10	31 – 16
5VU–25383–A0	31 – 17
5MT–25398–00	29 – 9
	31 – 10
5MT–25398–10	29 – 9
	31 – 10
5MT–25398–20	29 – 9
	31 – 10
4B5–2580T–00	30 – 4
4B5–2580U–10	30 – 15
4B5–2580V–00	32 – 3
4B5–2581T–00	30 – 1
1J3–25824–00	30 – 13
5GM–25824–00	32 – 10
5VS–25824–00	30 – 24
1D7–25825–00	32 – 11
306–25825–01	30 – 14
	30 – 25
4B5–2582V–00	32 – 1
4B5–2584B–00	34 – 44
4B5–2584C–01	34 – 45
4B5–25852–00	34 – 3
	34 – 33
4B5–25854–00	34 – 5
	34 – 35
4B5–25855–00	34 – 4
	34 – 34
5VS–25867–00	34 – 11
	34 – 41
4B5–25873–01	34 – 17
4B5–25874–00	34 – 14
4B5–25875–00	34 – 25
4B5–25875–10	34 – 15
4B5–25876–00	35 – 31
4B5–25876–10	34 – 49
4B5–2587A–01	18 – 40
4B5–25882–00	34 – 28
4B5–25883–00	34 – 27
4B5–25886–00	34 – 23
4B5–2588B–00	34 – 53
4B5–2588C–00	34 – 54
5VS–2589F–00	34 – 7
	34 – 37
5VS–2589H–00	34 – 6
	34 – 36

CODIGO Nº	REF. Nº
4D9–25914–10	32 – 6
13S–25919–00	30 – 10
	30 – 21
4TT–25919–00	32 – 9
4SV–25924–00	30 – 11
	30 – 22
3GM–25925–00	30 – 12
	30 – 23
4TT–25937–00	32 – 7
5GM–25975–00	32 – 12
5VS–25975–00	30 – 26
4B5–26110–10	33 – 4
4B5–26131–00	33 – 25
4B5–26143–00	33 – 18
4B5–26144–00	33 – 16
4B5–26145–00	33 – 19
4B5–2615E–00	34 – 30
4YR–26240–02	33 – 10
4YR–26241–02	33 – 9
3HX–26246–10	33 – 11
4B5–26279–01	13 – 17
4B5–26280–20	38 – 40
4B5–26290–20	38 – 42
4B5–26301–11	33 – 12
5VS–26332–00	34 – 10
	34 – 40
5RB–26396–01	44 – 2
4B5–27111–00	35 – 1
4X4–27114–00	35 – 7
	35 – 16
4B5–27151–00	35 – 6
4B5–27152–00	35 – 10
4B5–27311–10	35 – 14
4B5–27321–00	35 – 13
4B5–27411–00	37 – 1
4B5–27413–00	22 – 11
4BP–27413–00	35 – 23
	35 – 36
4B5–27421–00	37 – 3
4B5–27423–00	22 – 14
36Y–27424–01	10 – 18
4B5–27430–00	35 – 21
4DN–27431–01	35 – 22
4B5–27437–00	35 – 30
	35 – 43
4B5–27440–00	35 – 34
4DN–27441–01	35 – 35
4B5–27451–00	36 – 32

CODIGO Nº	REF. Nº
4B5–27461–00	36 – 33
5GJ–27463–00	36 – 30
4B5–27475–00	22 – 4
4B5–27476–00	22 – 9
4B5–27481–00	36 – 1
5SJ–27482–00	45 – 7
4B5–27483–00	36 – 28
4B5–27484–00	36 – 29
4B5–27485–00	36 – 8
4B5–27488–00	36 – 16
4B5–28100–10	28 – 39
4B5–2814E–00	37 – 47
4B5–2814H–00	38 – 33
4B5–28199–S4	28 – 41
4B5–28217–00	36 – 13
	36 – 26
4B5–28227–00	36 – 27
4B5–28237–00	38 – 35
4B5–28247–00	36 – 14
4B5–28267–00	36 – 15
4B5–28307–00	38 – 25
5VU–28307–00	37 – 9
4B5–28311–01	37 – 5
4B5–28312–00	37 – 27
4B5–28313–00	37 – 30
4B5–2832P–00	38 – 26
4B5–28335–00	38 – 16
4B5–28336–00	38 – 37
5KE–28345–10	22 – 15
4B5–28346–00	37 – 49
4B5–2834F–00	38 – 60
4B5–2834V–00	37 – 10
4B5–28351–01–P3	37 – 52
4B5–28351–01–P5	37 – 52
4B5–28351–01–P7	37 – 52
4B5–28356–40	19 – 25
4B5–2835U–00	38 – 4
4B5–2835V–00	38 – 7
4B5–2835X–01	33 – 23
4B5–28365–00	38 – 1
4B5–2836K–00	37 – 46
4B5–2836L–00	38 – 10
4B5–2836M–00	37 – 31
4B5–2836N–00	37 – 39
4B5–2836R–00	38 – 30
4B5–2836T–00	38 – 11
4B5–2836U–10	37 – 7
4B5–2836X–00	37 – 35

CODIGO Nº	REF. Nº
4B5–2836Y–00	37 – 43
4B5–28371–00	37 – 32
	37 – 40
4B5–28372–00	38 – 20
4B5–28377–01–P3	37 – 61
4B5–28377–01–P5	37 – 61
4B5–28377–01–P7	37 – 61
3CV–28378–00	13 – 23
5GM–28379–01	38 – 6
	38 – 9
	38 – 36
4B5–2837J–00	6 – 16
4B5–2837K–00	38 – 21
4B5–2837U–00	38 – 13
4B5–28395–00	38 – 57
4B5–2839K–00	37 – 38
5GJ–2839M–00	28 – 5
4B5–2839N–00	37 – 23
4B5–2839R–00	37 – 51
4B5–28415–00	38 – 54
4B5–28425–00	38 – 55
4B5–28435–00	38 – 56
4B5–2844E–00	38 – 17
4B5–28455–00	6 – 15
4B5–2847F–00	38 – 19
4B5–2847N–00	38 – 18
4B5–2847P–00	38 – 22
4B5–2847R–00	38 – 32
15B–46153–00	18 – 32
4B5–81410–00	39 – 1
5VU–81450–01	39 – 2
4B5–81815–00	14 – 13
4B5–81826–00	14 – 9
4XV–8182A–00	14 – 12
	14 – 14
4B5–81840–00	14 – 8
4B5–81844–00	14 – 10
1FK–81847–00	14 – 11
4B5–81860–00	45 – 48
4B5–81890–00	14 – 7
4B5–81940–00	45 – 10
5EA–81950–20	45 – 55
	47 – 20
5JJ–81950–20	45 – 57
5EA–81952–00	45 – 56
	47 – 21
5JJ–81952–00	45 – 58
4XY–81960–00	45 – 14

CODIGO Nº	REF. Nº
3WP–81980–00	45 – 18
4WA–81980–00	45 – 17
5VY–82100–00	45 – 2
5VU–82113–01	45 – 39
4B5–82116–10	45 – 12
3TJ–82131–00	28 – 40
1AE–82151–00	45 – 11
5JJ–82151–10	45 – 19
5JJ–82151–20	45 – 20
5JJ–82151–30	45 – 21
5JJ–82151–60	45 – 22
5JJ–82151–90	45 – 23
4B5–82320–00	46 – 2
5H0–8235Y–M0	45 – 9
5VU–82370–00	46 – 1
3YA–82378–00	47 – 14
2C0–82380–00	46 – 4
5SL–82511–08	45 – 40
5RU–8252U–00	45 – 41
4B5–82552–00	37 – 8
4B5–8255P–20	45 – 38
4B5–82566–00	45 – 33
5VU–82576–01	45 – 52
4B5–82583–00	28 – 8
5VS–8258J–00	45 – 43
4B5–82590–71	45 – 16
4B5–82599–00	45 – 49
5VS–8259J–00	45 – 44
4B5–82729–00	45 – 45
36Y–82917–10	34 – 12
4B5–83310–00	40 – 1
4B5–8331J–00	40 – 2
	40 – 5
4B5–83320–00	40 – 4
5RU–83331–00	40 – 3
	40 – 6
	43 – 3
3GM–83350–01	46 – 8
4B5–83371–00	46 – 6
4B5–8338V–00	40 – 7
4B5–83500–11	41 – 1
4B5–83511–00	41 – 2
4AS–83616–10	41 – 3
4B5–83912–00	34 – 39
4B5–83922–00	34 – 9
5VU–83930–00	44 – 4
4B5–83963–00	44 – 8
4B5–83972–02	44 – 1

CODIGO Nº	REF. Nº
36Y–83980–10	34 – 42
4B5–84310–02	42 – 1
4B5–84312–00	43 – 4
4SV–84314–00	42 – 2
8G9–84314–00	42 – 3
4B5–84340–00	42 – 6
4HC–84347–00	28 – 4
4SV–84347–00	42 – 4
4SV–84350–00	42 – 7
4B5–84359–00	42 – 16
5GJ–84397–00	42 – 5
4B5–84710–01	43 – 1
137–84714–60	43 – 2
4HC–84744–00	22 – 27
4B5–84745–00	22 – 26
4HC–84770–00	28 – 3
5CG–85113–00	47 – 4
3Y6–85130–02	22 – 31
5PS–85790–00	1 – 31
8GL–85885–00	9 – 3
5VU–85886–00	8 – 19
3P6–85916–00	47 – 6
4B5–8591A–10	45 – 37
4B5–8592A–00	10 – 22
4B5–85930–09	47 – 1
4B5–85970–00	47 – 15
4B5–85980–00	47 – 17
4B5–W0041–00	34 – 2
4B5–W0041–10	34 – 32
4B5–W0045–00	30 – 9
	30 – 20
5RU–W0046–00	32 – 8
5GJ–W0047–01	32 – 5
3GM–W0047–10	30 – 6
	30 – 17
3MA–W0047–10	30 – 8
	30 – 19
4D9–W0057–00	32 – 4
4SV–W0057–00	30 – 7
	30 – 18
4SV–W0057–10	30 – 5
	30 – 16
15B–W1131–00	1 – 26
4B5–W1760–00	16 – 2
4B5–W2587–20	34 – 1
4B5–W2587–30	34 – 31
4B5–W8250–40	45 – 36
4B5–Y2343–01	24 – 12

CODIGO Nº	REF. Nº
4B5–Y284S–21	38 – 24
90101–10025	35 – 17
90101–16003	23 – 17
90105–06026	1 – 6
90105–10150	33 – 5
90105–10283	35 – 8
	35 – 11
90105–10638	30 – 27
	32 – 13
90105–12052	19 – 15
90105–12053	23 – 21
90105–12058	19 – 14
90105–12787	19 – 4
90109–05012	38 – 53
90109–06249	43 – 6
90109–064G6	30 – 2
	32 – 2
90109–10029	35 – 4
90110–05032	39 – 4
90110–06021	1 – 14
90110–06036	16 – 31
90110–06168	7 – 5
	7 – 12
90110–06200	22 – 12
	22 – 17
90110–06208	39 – 3
90110–06218	4 – 10
90110–08077	11 – 11
90110–08080	14 – 6
90110–10021	19 – 7
90110–10022	19 – 8
90111–06015	10 – 13
90111–06020	10 – 11
90111–06095	37 – 28
90111–06097	20 – 5
90111–06105	38 – 14
90111–06109	22 – 35
	45 – 46
90111–10026	2 – 20
90111–10036	31 – 13
90116–09584	1 – 9
90119–05023	22 – 30
90119–06137	22 – 40
90119–06156	42 – 15
90119–06186	19 – 59
	19 – 61
90119–06193	24 – 3
90119–06200	26 – 3

CODIGO Nº	REF. Nº
90119–06209	36 – 11
	36 – 24
	37 – 19
90119–06212	37 – 22
	38 – 49
90119–06235	36 – 25
90149–05029	29 – 6
	31 – 7
90149–06082	12 – 5
90149–06117	20 – 4
90149–08035	45 – 42
90150–05024	38 – 23
	38 – 29
90151–06024	16 – 13
90151–06076	37 – 2
	37 – 4
90157–05025	35 – 24
	35 – 37
90159–05032	33 – 17
90160–04008	37 – 14
	37 – 33
	37 – 41
90167–05076	22 – 20
	22 – 22
	36 – 5
	36 – 19
	37 – 21
	37 – 50
	38 – 58
	38 – 59
90167–05079	33 – 21
90169–05003	37 – 29
90170–16326	15 – 20
90170–18221	16 – 24
90170–28419	24 – 11
90170–36279	16 – 23
90170–48003	15 – 6
90176–06014	46 – 3
90176–06016	23 – 14
	27 – 14
90176–06017	28 – 35
90176–08008	46 – 7
90176–10075	10 – 30
90176–12002	19 – 5
90179–05523	19 – 30
	37 – 57
	37 – 66
	38 – 31

CODIGO Nº	REF. Nº
90179–05523	42 – 11
90179–06018	33 – 3
90179–07652	2 – 4
90179–09003	1 – 13
90179–09379	2 – 8
90179–09612	1 – 12
90179–18007	2 – 22
90179–20013	16 – 14
90179–30691	24 – 7
90183–04039	45 – 8
90183–040A0	21 – 40
90183–05014	22 – 29
90183–05042	13 – 22
	21 – 5
	21 – 11
	21 – 41
	22 – 23
	28 – 7
	33 – 22
	36 – 6
	36 – 12
	36 – 20
	37 – 20
	37 – 60
	37 – 69
	38 – 5
	38 – 8
	38 – 48
	43 – 5
90183–05068	33 – 20
90183–050A6	22 – 24
90183–050A7	21 – 35
90183–05M02	21 – 20
	22 – 5
	22 – 10
90183–06008	37 – 17
90183–060A6	20 – 3
	36 – 7
	36 – 21
	37 – 56
	37 – 65
	38 – 3
90183–060A8	37 – 26
90185–10022	35 – 5
	35 – 9
	35 – 12
90201–04325	45 – 54
90201–05043	22 – 32

CODIGO Nº	REF. Nº
90201–05043	37 – 37
	37 – 45
90201–062G3	10 – 16
90201–065G8	27 – 7
90201–090P4	1 – 11
90201–10037	19 – 9
90201–10043	10 – 28
	33 – 6
90201–12043	19 – 6
	23 – 24
90201–14022	31 – 18
90201–22018	23 – 5
90201–24017	15 – 19
90201–244A9	15 – 3
90201–25017	7 – 20
90201–25290	14 – 5
90201–28017	24 – 10
90202–06004	37 – 18
90202–30235	24 – 8
90241–06002	37 – 12
90249–12004	33 – 2
90269–06001	21 – 22
	21 – 23
	22 – 36
	22 – 37
	22 – 38
	38 – 12
	38 – 47
	38 – 51
	40 – 8
90269–06008	21 – 18
	37 – 59
	37 – 68
	38 – 38
	38 – 39
	38 – 46
	38 – 50
	38 – 52
90269–06081	28 – 34
	45 – 6
90269–07077	19 – 41
90280–05048	2 – 24
90338–05009	19 – 49
	37 – 16
90338–05056	8 – 18
90338–08174	1 – 7
90338–20113	37 – 24
90340–12006	18 – 6

CODIGO Nº	REF. Nº
90387–06023	10 – 15
90387–0602X	37 – 54
	37 – 63
90387–06105	38 – 15
90387–06153	20 – 6
90387–06160	42 – 12
90387–06170	28 – 11
	28 – 25
90387–062M9	24 – 4
90387–064H8	35 – 29
	35 – 42
90387–07020	6 – 18
90387–08068	28 – 16
	28 – 20
90387–08079	20 – 7
90387–08M25	47 – 10
90387–10018	35 – 18
90387–10046	10 – 19
90387–12003	23 – 22
90387–12039	23 – 23
90387–16019	23 – 19
90387–17011	23 – 10
90387–18001	2 – 23
90387–20018	15 – 4
90387–22016	29 – 12
90387–26001	16 – 26
90401–10172	34 – 21
	34 – 46
90401–20005	7 – 19
90430–08119	1 – 5
	11 – 12
90430–09002	8 – 24
90430–10005	34 – 22
	34 – 47
90430–12202	1 – 32
90445–08017	8 – 5
90445–09094	22 – 44
90446–15377	45 – 59
90450–01001	13 – 4
90450–32015	6 – 2
90450–47002	8 – 6
	8 – 21
90450–72005	13 – 5
90460–15126	45 – 29
90464–07002	28 – 30
90464–08051	47 – 19
90464–08189	34 – 52
90464–09009	38 – 45

CODIGO Nº	REF. Nº
90464–10008	34 – 48
90464–10190	19 – 26
	19 – 29
90464–10M38	26 – 26
90464–12045	45 – 32
90464–13004	40 – 10
90464–13011	45 – 24
90464–13073	6 – 35
	44 – 10
	45 – 26
	45 – 31
90464–13077	19 – 48
	45 – 27
	45 – 50
	45 – 60
90464–13185	45 – 25
90464–14003	34 – 57
90464–15192	33 – 15
	33 – 24
	34 – 20
	34 – 51
	45 – 28
90464–15195	6 – 22
	45 – 30
90464–16006	45 – 47
90464–20015	8 – 30
90464–20181	34 – 56
90464–20191	19 – 52
	33 – 8
90464–25217	19 – 27
90464–30252	19 – 28
90464–32002	19 – 64
90465–12356	44 – 7
90467–090A2	22 – 45
	26 – 21
	26 – 27
90467–09120	6 – 32
90467–10035	6 – 31
	8 – 32
	8 – 34
90467–10038	6 – 30
90467–100A1	22 – 46
90467–13133	1 – 20
90467–15001	6 – 28
90467–150A2	8 – 29
90467–15141	6 – 29
90467–16181	1 – 21
90467–17089	8 – 28

CODIGO Nº	REF. Nº
90468–040A0	21 – 17
90468–16001	27 – 22
90468–18121	27 – 15
90480–01558	19 – 32
	36 – 9
	36 – 22
90480–01559	42 – 13
90480–10332	10 – 10
90480–12581	10 – 14
90480–13003	19 – 44
90480–13018	26 – 15
90480–13398	42 – 14
90480–13567	36 – 10
	36 – 23
	37 – 25
90480–14003	37 – 53
	37 – 62
90480–14182	47 – 9
90480–16301	6 – 17
90501–104F9	7 – 16
90501–15001	35 – 27
	35 – 40
90501–600A0	16 – 20
90506–20027	35 – 15
90506–23509	35 – 3
90506–40508	35 – 2
90520–10008	42 – 8
90560–06201	19 – 45
90560–08066	28 – 36
90560–17306	31 – 20
91312–04025	45 – 53
91312–05020	46 – 5
91312–06016	34 – 16
91312–06020	4 – 7
	5 – 9
	8 – 4
91312–06035	1 – 25
91312–08020	18 – 3
91312–08030	24 – 13
91314–08025	25 – 40
91314–08040	25 – 39
91317–05055	44 – 5
91380–06012	10 – 3
91402–20012	35 – 25
	35 – 38
91702–06038	35 – 26
	35 – 39
91808–16023	1 – 3

CODIGO Nº	REF. Nº
92012–05010	28 – 27
92012–05012	33 – 13
92012–05020	45 – 34
92012–06010	47 – 7
92012–06014	13 – 10
92012–06025	34 – 29
	34 – 55
92012–06050	7 – 2
92012–08020	27 – 18
	27 – 20
92012–08035	28 – 17
	28 – 21
92014–06014	22 – 3
	22 – 8
	47 – 16
	47 – 18
92902–05600	26 – 13
	28 – 29
92902–06600	5 – 13
	5 – 18
92902–08600	23 – 3
92902–10200	35 – 19
92990–06200	10 – 4
93101–30001	2 – 26
93101–35001	16 – 3
93102–12442	5 – 4
93102–15004	16 – 33
93102–25017	23 – 9
93102–25044	31 – 5
93102–25064	17 – 9
93102–40021	18 – 28
93102–42004	16 – 28
93102–44008	2 – 27
93102–48004	18 – 30
93102–55004	18 – 36
93104–41119	16 – 17
93105–45017	18 – 31
93106–28043	29 – 4
93210–06422	7 – 4
93210–09525	7 – 9
93210–10096	7 – 23
93210–14579	7 – 11
93210–16325	12 – 10
93210–19123	12 – 15
	18 – 34
93210–21190	5 – 16
93210–22382	1 – 30
	11 – 10

INDICE NUMERICO

CODIGO Nº	REF. Nº
93210–26001	16 – 27
93210–30611	16 – 10
93210–32738	8 – 3
93210–33133	5 – 11
93210–34504	18 – 26
93210–44545	16 – 18
93210–44704	31 – 12
93210–48364	11 – 8
93210–50553	18 – 2
93306–00106	5 – 3
93306–00713	16 – 11
93306–00807	18 – 27
93306–00808	18 – 29
93306–07208	29 – 3
93306–20352	31 – 2
93306–205A8	17 – 8
93306–20637	18 – 17
93306–20651	16 – 29
93306–30102	16 – 1
93306–30217	16 – 34
93306–30317	31 – 3
93306–30427	17 – 4
	18 – 23
93306–90602	2 – 25
93317–32493	15 – 2
93317–41761	23 – 20
93332–00010	23 – 8
93332–00086	18 – 4
93399–99932	24 – 5
93399–99957	25 – 41
93450–16068	2 – 18
93450–16159	2 – 15
93501–04011	35 – 28
	35 – 41
93505–08030	7 – 15
93603–50195	21 – 29
93608–30002	18 – 37
93608–60001	2 – 21
93612–16254	1 – 10
	1 – 28
93900–00030	29 – 8
	31 – 9
94112–15008	29 – 7
94112–15009	29 – 7
94116–15011	31 – 8
94116–15012	31 – 8
94580–25058	7 – 7
94582–18132	4 – 3

CODIGO Nº	REF. Nº
94701–00353	1 – 16
95022–06008	45 – 13
95022–06012	6 – 7
95022–06014	28 – 13
95022–06025	6 – 5
	34 – 18
95022–06035	11 – 3
	12 – 8
	12 – 13
	13 – 16
	18 – 35
95022–06050	11 – 4
95022–06085	1 – 15
95022–08012	1 – 4
95022–08025	13 – 15
95022–08040	13 – 14
95022–08110	11 – 5
95602–05100	22 – 33
95602–05200	45 – 35
95602–08200	10 – 27
95602–10100	33 – 7
	35 – 20
95602–10200	19 – 19
95602–12200	19 – 16
	23 – 25
95602–14200	31 – 19
95607–06200	27 – 6
95612–08620	1 – 8
95617–06100	34 – 8
	34 – 38
95702–05500	6 – 13
95702–06500	34 – 19
	38 – 41
	38 – 43
95702–08500	47 – 8
95802–06010	19 – 23
	21 – 43
	33 – 26
	34 – 50
95802–06012	6 – 25
	34 – 24
	34 – 26
95802–06014	35 – 32
95802–06016	20 – 8
95802–06020	37 – 55
	37 – 64
	42 – 10
	45 – 1

CODIGO Nº	REF. Nº
95802–06020	45 – 15
95802–06025	19 – 24
	27 – 9
95812–06025	14 – 15
95812–06030	8 – 26
95812–08025	35 – 33
	35 – 44
95812–08030	19 – 21
	19 – 55
	19 – 57
95812–10040	10 – 29
95812–10100	23 – 12
95822–06010	45 – 5
95822–06012	19 – 63
95822–06016	19 – 46
	28 – 24
95822–06020	13 – 2
	28 – 10
95822–08012	47 – 13
95822–08016	19 – 50
	19 – 53
95822–08020	19 – 37
95822–08030	47 – 11
95822–10045	19 – 34
97002–05010	28 – 28
97002–05020	26 – 12
97002–08035	23 – 2
97022–05012	37 – 36
	37 – 44
97022–06016	5 – 17
97022–06030	5 – 12
97602–04214	34 – 13
	34 – 43
97702–40010	21 – 31
	21 – 39
97702–50014	26 – 24
97702–50016	21 – 4
	21 – 10
	21 – 36
	21 – 42
	22 – 13
	22 – 18
	36 – 2
	36 – 3
	36 – 4
	36 – 17
	36 – 18
	36 – 31

CODIGO Nº	REF. Nº
97702–50016	37 – 15
	37 – 48
	37 – 58
	37 – 67
	38 – 2
	40 – 9
	41 – 4
	43 – 7
97702–50025	8 – 11
97707–40612	22 – 28
98502–05020	33 – 14
98507–05012	44 – 6
98507–05050	44 – 9
98902–03008	45 – 51
98902–05010	21 – 34
98980–06010	10 – 17
99009–12400	5 – 10
99009–25400	17 – 7
	18 – 22
99009–42500	16 – 32
99244–00080	21 – 16
99247–00080	21 – 16
99480–08020	13 – 13
99530–10114	11 – 2
	12 – 7
	12 – 12
	18 – 15
99530–10116	1 – 24
99530–14016	23 – 11

CODIGO Nº	REF. Nº

CODIGO Nº	REF. Nº